Model: Range Rover / L322

Model year: 2012

Last Service Recorded: None recorded

Features

Drive	LHD
Engine	5.0L SC V8 Petrol
CAB style	4 DOOR ESTATE
Series	5.0 V8 SC PETROL SERIES
Transmission	6-Speed Automatic 6HP28
Colour	
Trim	

Minor Features

255/50 R20 A/T
ADAPTIVE BI-XENON H/LMP NAS
AUDIO 6 DISC PLAYER
AUTO DIP FRT/RR HIGH BEAM AST
AUTOMATIC GEARSHIFT
BUMPER INSERT - PAINTED
CARGO COMPARTMENT NET
CCR CENTRE CONSOLE
CCR DOOR CASING - CORE
CCR REAR BUMPERS
CCR SEATS
CONSOLE LID-LEATHER
CRUISE CONTROL
DOOR TRIM PANEL-LEVEL 2
FOOT PEDAL - METALIC FINISH
FRT FENDER GILL - B/CNOBLE MSH
FRT SEAT ARMREST-FULLY ADJUST.
GRL-BLK SURND NOBLE MESH
HEADLAMP POWER WASH
HTD/COOLED FRONT - HTD REAR
I/P FAC CNTRST-JET/JET
INTERIOR TRIM - TPO
IVORY HEADLINER
LEA GR SH KB W/WOOD INLAY
LEV 2 EMISSION
LOAD RETAINER LUGGAGE NET
MICHELIN TYRE VNDR -NON RECYCL
MPH/KPH SPEEDOMETER-USA
NAVIGATION CENTRE-COLOR NAS
NON LOCKING LUG NUTS
PERSONAL TELEPHONE INTEGRATION
PREMIUM ICE 1200W
REAR AXLE OPEN DIFF
REAR SEAT SKI STOWAGE
SECURTY SIREN-LESS BATT BACKUP
SILL MLDG-EXT BASE
SOLIHULL ASSEMBLY (UK)
SPECIAL VALUE PACK E
SUPERCHARGED BADGE
T/TOW HTH-PREP/ROW
TPO CONSOLE MATERIAL
TYRE PRESSURE SENSORS-315 MHZ
LESS BREAKDOWN WARNING SIGN
LESS DVD SCREEN
LESS PARK HEATING
ACCESSORY USB UNIT W/IPOD FUNC
AIR CONDITIONING-FRONT/REAR
AUTO DIM RR VW MIR W/HMLNK
AUTO HEADLAMPS-FOLLOW ME HOME
BLIND SPOT MONITORING SYSTEM
BUMPERS-PAINTED BODY COLOR
CARPET-EBONY
CCR COCKPIT
CCR FRONT BUMPERS
CCR REAR SPOILER
CONSOLE ASHTRAY
CONTINUOUS VARIABLE DAMPING
DOOR HANDLES-BODY COLOR
ELECT FRT SEAT ADJ DRV MEMORY
FRT DR TRDSTRIP-BRIGHT SC
FRT FLR MATS-CUT PILE CARPET
FUSE LABEL
H.D. RADIO AND SDARS
HOMELINK
HTD/P-FOLD/MEM/A-DIM/APP.LIGHT
INFRARED REFLECTIVE WNDSCRN
IP-MID LEATHER
JET TUNNEL CONSOLE
LEAD/UNLEADED FUEL CAPABILITY
LIGHT TINT/DARK TINTED GLASS
LOADSPACE SCUFF PLATE-BRIGHT
MIL LIGHT-I/P EMISS/EXHAUST
NAS LITERATURE PACK
NAVIGATION DISK - U.S.A.
NORMAL TEMP ZONES
POWER 10-WAY DRIV SEAT ADJUST
PWR TILT/SLIDE SUN ROOF
REAR BUMPER-PLASTIC-BODY COLOR
RR SEAT-60/40 FOLD W/SKI HATCH
SIDE/CURTAIN/AIRBAG PACK 2
SMOKERS PACK
SPARE WHEEL-LIMITED SERVICE
STNG WHL-WOOD/LTR/HTD/NOBLE/MF
SURROUND CAMERA SYSTEM
TOOL KIT
TRANSIT COATING
USA
LESS DVD PLAYER
LESS INTERIOR SCANNING ALARM
LESS REAR SEAT RECLINER

LESS RR SEAT VISOR VANITY MIRR

LESS SECURITY PACK

RANGE ROVER

RANGE ROVER

OWNER'S HANDBOOK

Publication Part No. LRL 18 02 55 121

Introduction

IMPORTANT

The information contained in this handbook covers all vehicle derivatives and optional equipment, some of which may not be fitted to your vehicle. Due to printing cycles, this handbook may include descriptions of options before they become generally available.

The vehicle options, hardware and software, are designed for the market in which the vehicle is intended for original sale. If the vehicle is registered or used in another geographical area, it may need modifications to suit local requirements. Land Rover is not responsible for the cost of any modifications. Warranty conditions may be affected.

The information contained in this publication was correct when it went to print. Subsequent vehicle design changes may result in a supplement being added to the literature pack. Updates can also be viewed on the Land Rover internet site at; **www.ownerinfo.landrover.com**.

In the interest of development, the right is reserved to change specifications, design or equipment at any time without notice and without incurring any obligations. This publication, or part thereof, may not be reproduced nor translated without our approval. Errors and omissions excepted.

Symbols used in this handbook



This safety alert symbol precedes any safety message about a risk of personal injury. It will also have one of the following signal words.

⚠DANGER

Indicates a hazardous situation which, if not avoided, will result in death or serious injury.

⚠WARNING

Indicates a hazardous situation which, if not avoided, could result in death or serious injury.

⚠CAUTION

Indicates a hazardous situation which, if not avoided, could result in minor or moderate injury.

NOTICE

Indicates either a procedure which must be followed precisely, or information that should be considered with great care, in order to avoid the possibility of damage to your vehicle.



This recycling symbol Identifies items that must be disposed of safely in order to prevent unnecessary damage to the environment.



This symbol identifies features that can be adjusted, disabled or enabled by a Land Rover Retailer/Authorized Repairer.

© Land Rover 2011.

All rights reserved. Published by **Land Rover Technical Communications**.

Introduction....2
Vehicle stability....4
Reporting safety defects....5
Entering the vehicle....6
Exiting the vehicle....13
Interior locks....14
Front seats....15
Rear seats....20
Steering wheel....24
Occupant safety....25
Exterior lights....41
Interior lights....44
Wipers and washers....46
Windows and sunroof....49
Mirrors....52
Blind spot monitoring....54
Garage door opener....57
Instrument panel....61
Warning lamps....65
Heating and ventilation....69
Convenience features....74
Load carrying....77
Towing....81
Starting the engine....84
Gearbox....87
Stability control....91
Air suspension....93
Brakes....96
Tire pressure monitoring system....100
Parking aid....103
Cruise control....105
Adaptive cruise control (ACC)....107
Terrain response....112
Hill descent control (HDC)....115
Camera systems....117
Touch screen and settings....120
Radio....123
Satellite Radio....126
CD player....128
Portable audio....131
DVD....136
Rear seat entertainment....141
Voice control....150
Bluetooth telephone....153
Navigation system....160
4 x 4 Info....180
Fuel and refuelling....182
Maintenance....186
Fluid level checks....202
Technical specifications....208
Vehicle battery....215
Tires....220
Fuses....229
Wheel changing....234
Vehicle recovery....238
After a collision....241
Vehicle labels....242
Controls overview....254

VEHICLE STABILITY

⚠WARNING

Utility vehicles have a significantly higher rollover rate than other types of vehicles. Since this vehicle is designed to be operated off-road, it has a higher ground clearance and hence a higher center of gravity. Such a feature has been associated with an increased risk of vehicle rollover.

This vehicle is not designed for cornering at the same speed as conventional passenger cars any more than a low-slung sports car is designed to perform satisfactorily under off-road conditions. If at all possible, avoid sharp turns or abrupt maneuvers. As with other vehicles of this type, failure to operate the vehicle correctly may result in loss of control or vehicle rollover.

Another factor shown to significantly increase rollover risk is unauthorized vehicle modifications such as fitting incorrect specification tires, oversize tires, body lifting, incorrect springs/dampers, incorrect vehicle loading/trailer towing.

Many vehicle rollovers occur when a driver attempts to bring a vehicle back onto the road after some or all of the wheels drift onto the shoulder of the road, especially when the shoulder is unpaved. If you find yourself in such a situation, do not initiate any sharp or abrupt steering and/or braking maneuvers to re-enter the roadway. Instead, let the vehicle slow down as much as is safely possible before attempting to re-enter the roadway and keep your wheels as straight as possible while re-entering the roadway.

However, on-road crash data also indicates that driver behavior is a greater factor than a high center of gravity in determining a vehicle's overall rollover rate. The single most effective driver behavior that can reduce the risk of injury or death in all crashes including rollover is to ALWAYS WEAR YOUR SEAT BELT and to properly retrain all child passengers in the rear seat in an age and size appropriate child safety seat or belt positioning booster seat. In a rollover crash, an unbelted person is significantly more likely to die than a person wearing a seat belt.

VEHICLE DEFECTS (U.S.)

If you believe that your vehicle has a defect which could cause a crash or could cause injury or death, you should immediately inform the National Highway Traffic Safety Administration (NHTSA) in addition to notifying Land Rover North America Inc.

If NHTSA receives similar complaints, it may open an investigation, and if it finds that a safety defect exists in a group of vehicles, it may order a recall and remedy campaign.

However, NHTSA cannot become involved in individual problems between you, your Dealer or Land Rover North America Inc.

To contact NHTSA, you may call the Vehicle Safety Hotline toll-free at 1-888-327-4236 (TTY: 1-800-424-9153); go to http://www.safercar.gov; or write to:

Administrator, NHTSA, 400 Seventh Street SW., Washington DC. 20590.

You can also obtain other information about motor safety from http://www.safercar.gov.

VEHICLE DEFECTS (CANADA)

If you believe that your vehicle has a defect which could cause a crash or could cause injury or death, you should immediately inform Transport Canada, in addition to notifying Land Rover Canada.

To contact Transport Canada, call their toll-free number: 1-800-333-0510.

UNLOCKING THE VEHICLE

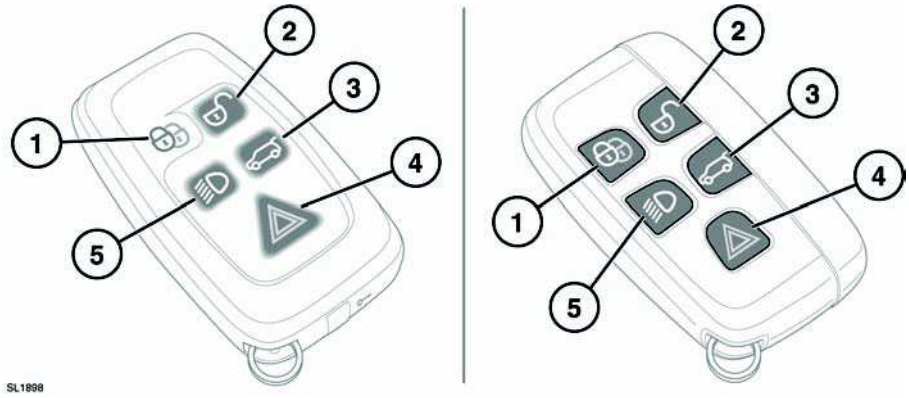

⚠WARNING

To prevent accidental or unauthorized operation, never leave the Smart Key unattended in the vehicle. Never leave children or animals unattended in the vehicle. The vehicle can be operated when the Smart Key is inside the vehicle.

Note: *There are two designs of Smart Key, refer to the information which is relevant to the design of Smart Key supplied with the vehicle.*

Note: *The operational range of the Smart Key will vary considerably depending on atmospheric conditions and interference from other transmitting devices.*

Note: *If any door or the tailgate is unlocked 10 times within a short period, the latch is disabled for approximately one minute.*

The vehicle is supplied with two Smart Keys (of the same design). The Smart Keys act as remote controls for the locking and alarm system and allow the vehicle to be locked, unlocked and driven without the use of a conventional key. See **LOCKING AND ARMING THE ALARM** (page 13). See **KEYLESS STARTING** (page 84).

1. Lock.
   - Press once to lock the vehicle and activate the alarm system. The hazard warning lamps will flash once to confirm.
2. Unlock.
   - Press briefly to unlock the vehicle and deactivate the alarm. The hazard warning lamps will flash twice to confirm. The interior lamps will illuminate to assist entry to the vehicle. See **SINGLE/MULTI-POINT ENTRY** (page 9).

3. Tailgate release.
   - Press briefly to release the tailgate. The vehicle security system will remain active while the tailgate is open, but intrusion and inclination sensing systems will be disabled. On closing of the tailgate, the hazard warning lamps will flash after a few seconds to confirm the full alarm system has been reactivated (if previously armed).**10, OPENING THE TAILGATE**.
4. Panic alarm.
   - Press and hold for 3 seconds (or press 3 times within 3 seconds) to activate the horn and the hazard lamps.

     Note: *The horn and hazard lamps will switch off automatically after approximately 2 minutes and 45 seconds.*
   - Once active for more than 5 seconds, the alarm can be cancelled by pressing the button and holding for 3 seconds (or pressing 3 times within 3 seconds).
   - The emergency alarm will also be cancelled if a valid smart key is present when the START/STOP button is pressed.
5. Approach lighting.
   - When approaching the vehicle during darkness, press to switch on the approach illumination. Press again to turn the approach lamps off.
   - The approach illumination period set at the factory is 30 seconds. This delay period may be configured to provide illumination lasting between 0 and 180 seconds. **63, VEHICLE INFORMATION AND SETTINGS MENU**

     Note: *In some markets a second press of the button will turn on the headlamps and reversing lamps. A third press will be required to turn the lamps off.*

Note: *A replacement Smart Key can be obtained only from your Land Rover Retailer. The Retailer will require proof of ownership.*

Notify your Retailer immediately if a Smart Key is lost or stolen.

Note: *The gas filler flap can only be opened when the vehicle is unlocked.*

EMERGENCY KEY

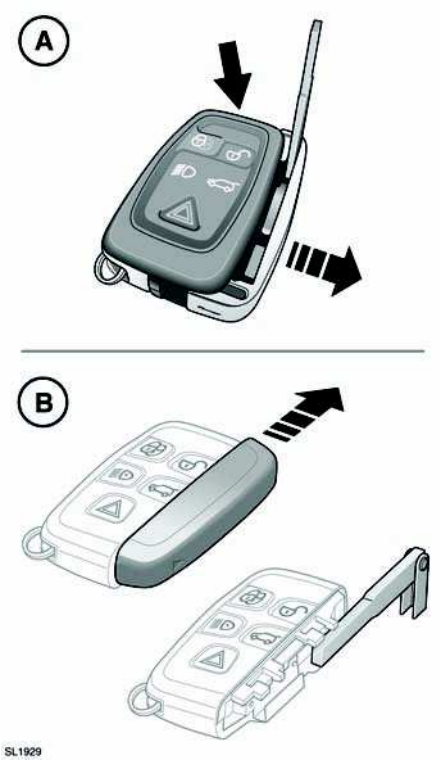

Note: *There are two designs of Smart Key, refer to the information which is relevant to the design of Smart Key supplied with the vehicle.*

A. Press emergency key release button and slide out side cover to release the key.

B. Slide and remove cover to expose the emergency key.

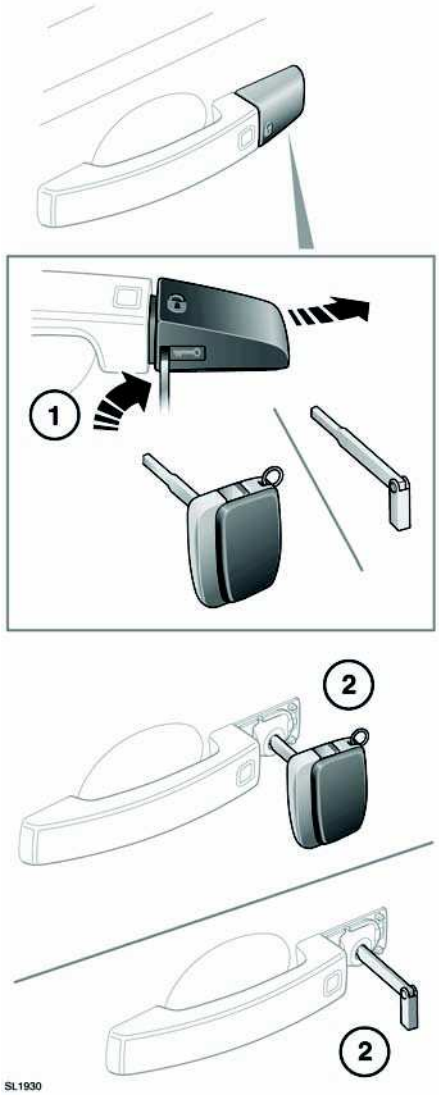

1. Insert the key blade into the slot at the base of the door lock cover and gently lever the key blade upwards.

Carefully twist the key blade, to lever the cover off the retaining clips.

2. Insert the key blade into the exposed lock and turn to operate.

AUTOMATIC RELOCKING

If the vehicle is unlocked but neither a door nor the tailgate is opened within 1 minute, all doors will lock again automatically.

SINGLE/MULTI-POINT ENTRY

When you press the unlock button, your vehicle will unlock in one of two ways:

1. Single Point Entry: Unlocks the driver's door and gas filler flap only. A second press is required to unlock the remaining doors and the tailgate.
2. Multi Point Entry: Unlocks all doors, gas filler flap and the tailgate on the first press.

Single point entry can be disabled on individual Smart Keys by unlocking the vehicle then simultaneously pressing and holding the lock and unlock buttons for 3 seconds. The vehicle will lock and then unlock and the hazard warning lights will flash twice to confirm the change. You can now unlock all doors with a single press. Repeating the procedure will re-enable Single point entry.

This feature may also be set via the settings menu.**63, VEHICLE INFORMATION AND SETTINGS MENU**.

GLOBAL OPENING

Press and hold the Smart Key unlock button for 3 seconds. The alarm will disarm, the vehicle will unlock (either single or multi-point) and all of the windows will open.

Press any button on the Smart Key to cancel the operation.

SMART KEY CHECK

If there is no Smart Key inside the vehicle when the last door is closed, the message **Smart Key Not Found - Refer to handbook** will be displayed for 4 seconds in the vehicle message center, to alert the driver to the absence of a Smart Key. See **KEYLESS START BACKUP** (page 84).

DISARMING WHEN THE UNLOCK BUTTON FAILS TO WORK

If the unlock button fails to operate, the vehicle can still be unlocked and the alarm disabled. To unlock the vehicle:-

1. Unlock the drivers door using the key blade.
2. Position the Smart Key underneath the steering column. See **KEYLESS START BACKUP** (page 84).

Note: *When the driver's door is unlocked using the key, the alarm will sound until the Smart Key is positioned correctly.*

DEACTIVATING THE ALARM WHEN TRIGGERED

If the alarm has been triggered it can be deactivated by pressing the Smart Key unlock button, or by positioning the Smart Key underneath the steering column. See **KEYLESS START BACKUP** (page 84).

SMART KEY SYSTEM TRANSMITTERS

⚠WARNING

Any person fitted with an implanted medical device should be kept at a distance of at least 8.7 inches (22 cm) away from any transmitter mounted in the vehicle. This is to avoid any possibility of interference between the system and the device. Interference may cause the implanted medical device to malfunction, causing serious injury or death.

For information concerning the locations of the security system transmitters. See SMART KEY SYSTEM TRANSMITTERS (page 213).

STEERING COLUMN LOCK

NOTICE

Your vehicle is fitted with an electronic steering column lock. The column unlocks when a Smart Key is detected inside the vehicle.

Any malfunction of the steering column lock will be indicated by the message **STEERING COLUMN LOCKED** being displayed in the message center. If this occurs:

1. Lock and then unlock the vehicle using the Smart Key.
2. Try again to unlock the steering column lock, by turning the steering wheel gently to the left and right.
3. If the problem persists, seek qualified assistance immediately.

OPENING THE TAILGATE



Press to release the tailgate.

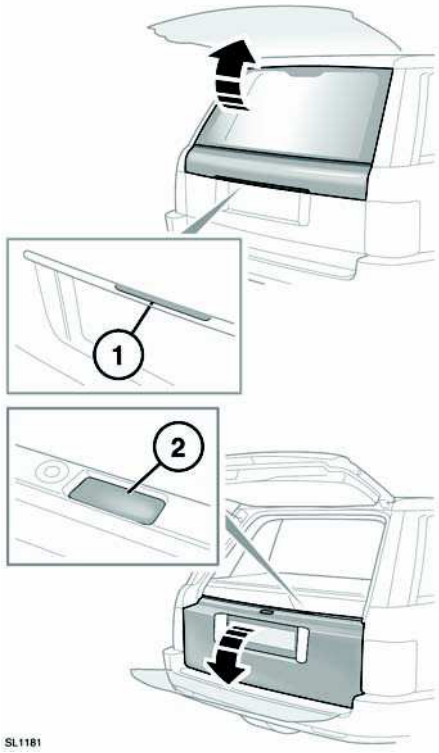

1. With the vehicle unlocked, press the touchpad on the underside of the handle to release the upper tailgate.
2. With the upper tailgate open, press the touchpad on the lower tailgate waist moulding to release the lower tailgate.

TAILGATE EMERGENCY MANUAL OPERATION

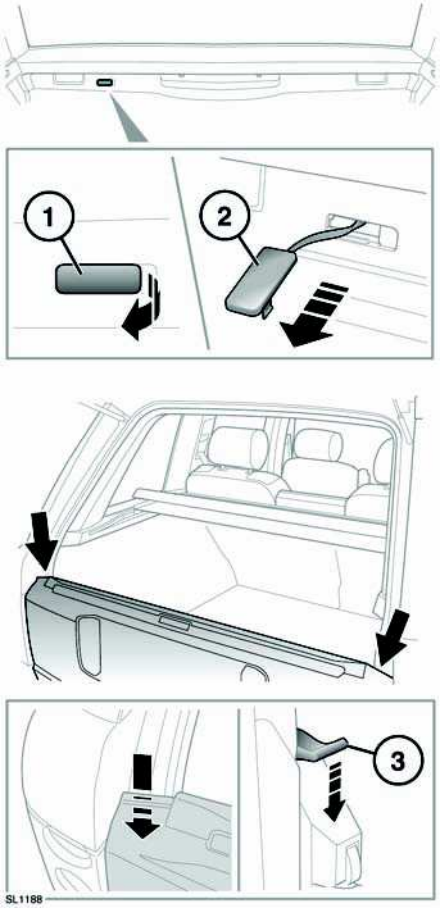

If the battery has been disconnected or has discharged, the tailgate can be opened manually.

1. Fold the rear loadspace cover and lever out the plastic tab.
2. Pull the tab to release the upper tailgate.
3. Push down on the two hidden catches to release the lower tailgate.

CHANGING THE SMART KEY BATTTERY

When the battery needs renewing, there will be a significant decrease in the effective range and the message **SMART KEY BATTERY LOW** will be displayed in the message center.



To renew the battery:

1. Press and hold the release button.
2. Open the side cover.
3. Remove the battery drawer and remove the battery.
4. Fit a new CR2032 type battery (available from your Retailer), with the positive (+) side upwards.

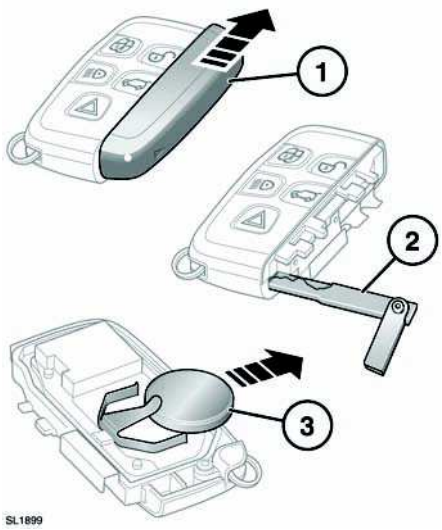

To renew the battery:

1. Slide the cover in the direction of the arrow until a click is heard. Remove the cover.
2. Use the emergency key blade to separate the Smart key body.
3. Fit a new CR2032 type battery (available from your Retailer), with the positive (+) side upwards.

Note: *Avoid touching the new battery, as moisture/oil from fingers can reduce battery life and corrode the contacts.*

Refit the parts in reverse order, ensuring that they click securely into place.

Battery disposal: Used batteries must be disposed of correctly, as they contain harmful substances. Seek advice on disposal from your Retailer and/or your local authority.

LOCKING AND ARMING THE ALARM

⚠WARNING

Before exiting the vehicle, always ensure that the gear selector is in the Park (P) position, the engine is turned off, the parking brake is applied and the Smart Key is removed from the vehicle.

NOTICE

No modifications or additions should be made to the anti-theft system. Such changes could cause the system to malfunction.

Press the lock button on the Smart Key briefly, to lock the vehicle and activate the perimeter alarm. The hazard warning lamps will flash to confirm. Doors can still be unlocked and opened from inside the vehicle.

Note: *The vehicle will not lock if a door, the luggage compartment or the hood aperture is open.*

Note: *The gas filler flap can be opened only when the vehicle is unlocked.*

The perimeter alarm will sound if:

- The hood, tailgate or a door are opened.
- The vehicle battery is disconnected.
- An attempt is made to disconnect the alarm siren.

ALARM INDICATOR

An indicator in the instrument panel will flash whenever the alarm is active.

GLOBAL CLOSING

⚠WARNING

Ensure that no children, pets, or obstructions are in any open aperture before operating global closing. Safety mechanisms are in place to prevent serious injury, however injuries can still occur.

Press and hold the Smart Key lock button for 3 seconds. All doors and the luggage compartment will lock and after 3 seconds all open windows will be closed. The alarm will be activated.

Press any button on the Smart Key to cancel the operation.

DRIVE-AWAY LOCKING

Drive away locking automatically locks all the doors when the vehicle is in motion. This feature can be enabled/disabled via the Vehicle settings menu.**63, VEHICLE INFORMATION AND SETTINGS MENU**

Note: *Pressing the lock or unlock button on the Smart Key will override drive away locking for the current journey.*

MISLOCK

When attempting to lock the vehicle with the Smart Key, if one of the doors, the hood or the luggage compartment is open, the vehicle will not lock and two tones will sound. Check that all doors, the hood and the luggage compartment are closed properly and lock the vehicle again.

Interior locks

DOOR BUTTONS AND LEVERS

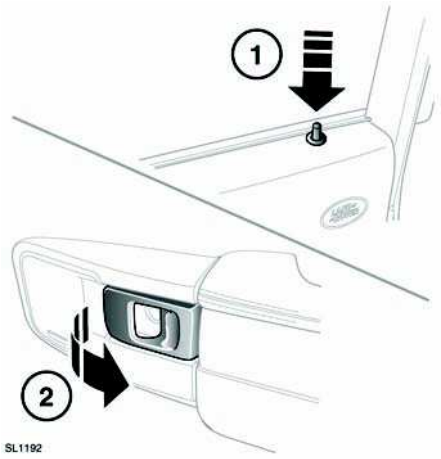

1. Press the button on the selected door to lock the door.
2. Pull the lever once to unlock the door; pull once more to open the door.

Note: *If the vehicle was locked using the Smart Key, operating the interior door release lever will only unlock the door. If the door is opened the alarm will sound.*

MASTER LOCKING SWITCH

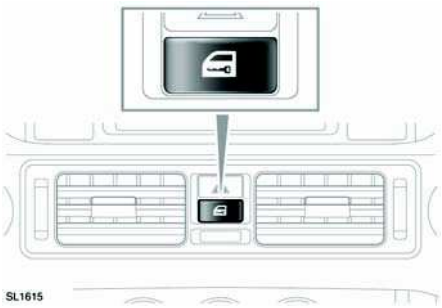

Press to lock or unlock all doors and luggage compartment.

ELECTRIC SEATS

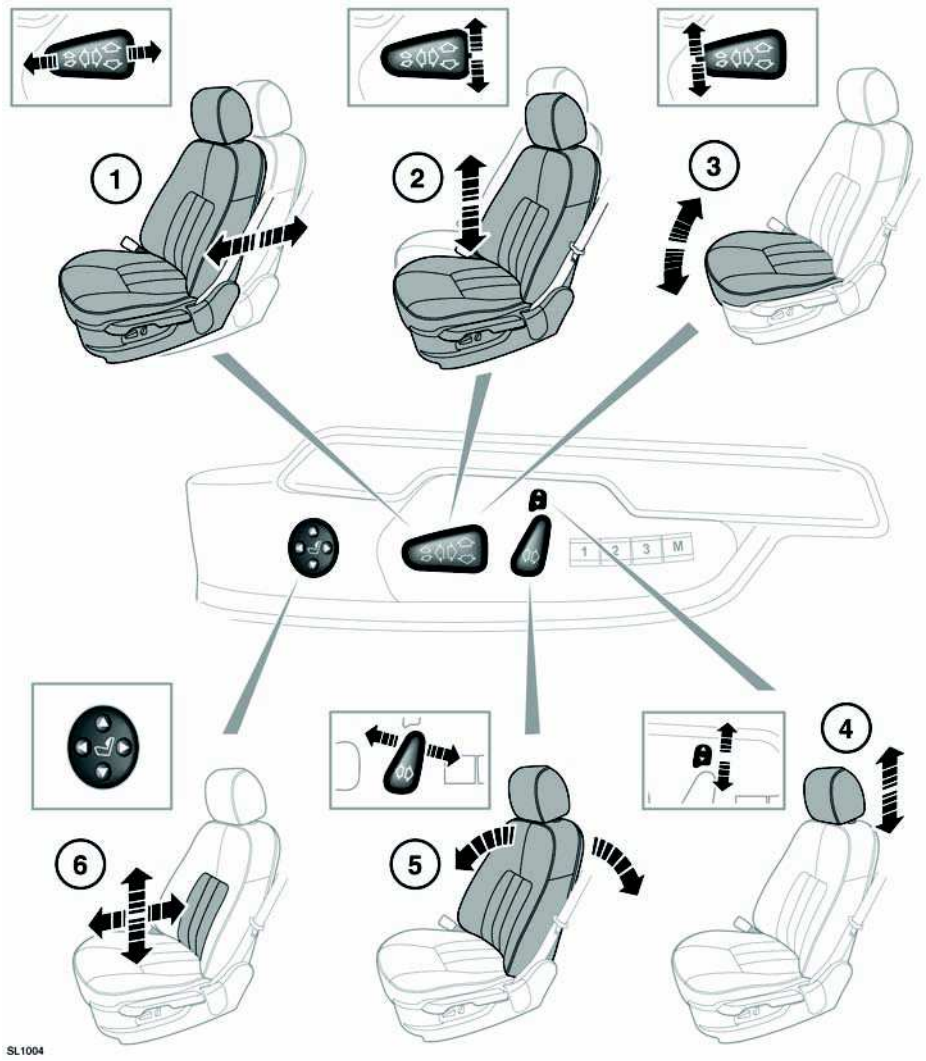

⚠WARNING

Do not adjust the seat while the vehicle is moving. Doing so could cause loss of vehicle control and personal injury.

1. Forward and back adjustment.
2. Height adjustment.

3. Cushion angle adjustment.
4. Head restraint adjustment.
5. Backrest adjustment.
6. Lumbar support adjustment.

To adjust the seats, the Smart Key must be in the vehicle and the ignition switched on.

STALLED ADJUSTMENT

NOTICE

If seat movement stops unexpectedly during adjustment, check for and remove any obstructions.

Once any obstructions have been removed, the seat adjustment mechanism can be reset as follows:

Operate the button again, to continue the stalled adjustment and hold in that position for 2 seconds. When seat movement resumes, hold the button until the end of travel in that direction has been reached. Seat adjustment can now be carried out as normal.

Note: *If no obstructions can be seen, but normal adjustment cannot be carried out without stalling, contact your Land Rover Retailer/Authorized Repairer.*

SITTING IN THE CORRECT POSITION

⚠WARNING

Riding with a reclined seatback increases your chance of serious or fatal injuries in the event of a collision or sudden stop. The protection of your restraint system (seat belts and airbags) is greatly reduced by reclining your seat. Seat belts must be snug against your hips and chest to work properly. The more the seatback is reclined, the greater the chance that an occupant's hips will slide under the lap belt or the occupant's neck will strike the shoulder belt. Drivers and passengers should always sit well back in their seats, properly belted, and with the seatbacks upright. Drivers and passengers must not ride with the seat reclined more than 30 degrees.

⚠WARNING

Never adjust the driver's seat while the vehicle is moving. Any sudden or unexpected movement of the seat could cause you to lose control of the vehicle resulting in an accident.



The seat, head restraint, seat belt and air bags,

all contribute to the protection of the user. Correct use of these components will give you greater protection. Therefore, you should always observe the following points:

1. Sit in an upright position with the base of your spine as far back as possible and the seatback in an upright position, to achieve optimum benefit of the seat belt in the event of an accident.
2. Do not move the driver's seat too close to the steering wheel. Ideally, a minimum distance of 10 inches (254 mm) is recommended between the breastbone and the steering wheel air bag cover. Hold the steering wheel in the correct position, with your arms slightly bent.

- Adjust the head restraint so that the top of the head restraint is above the center line of the head.
- Position the seat belt so that it is mid-way between your neck and your shoulder. Fit the strap tightly across your hips, not across your stomach.
- Ensure that your driving position is comfortable and enables you to maintain full control of the vehicle.

⚠WARNING

Do not sit or lean unnecessarily close to the air bag. An inflating air bag can cause serious injury or even death. Always fasten your seat belt properly and position the seat so that you can sit as far back as possible from the air bag and still comfortably reach all controls.

FOLDING ARMREST



If fitted, the folding armrest may be stowed by moving to the vertical position. Use the adjuster wheel (arrowed) to set the required height.

DRIVING POSITION MEMORY

⚠WARNING

Before activating the seat memory, ensure that the area immediately surrounding the seat is clear of obstructions and that all occupants are clear of moving parts.

Once you have adjusted the power operated driver's seat, steering column and exterior mirrors for your ideal driving position, the vehicle can memorize these settings for future use. See **STEERING COLUMN** (page 24). See **EXTERIOR MIRRORS** (page 52).

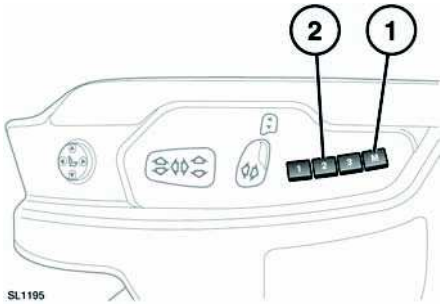

1. Press the memory store (M) button to activate the memory function. The switch indicator will illuminate.
2. Press one of the preset buttons within 5 seconds to memorize the current settings. **MEMORY (1, 2 or 3) SETTINGS SAVED** will be displayed on the message center, accompanied by an audible chime to confirm the settings have been memorized.
3. To recall a stored position press the relevant preset button. **MEMORY (1, 2 or 3) RECALLED** will be displayed in the message center.

A seat position will only be memorized during the 5 second active period.

Any existing settings will be over-written when programming a memory position.

ENTRY AND EXIT MODE

Entry and exit mode provides automatic movement of the steering column and driver's seat making it easier to enter or exit the vehicle. When enabled, on opening the driver's door the system will raise the steering column to the highest position and lower the driver's seat to the lowest position assisting with exit from the vehicle.

When the driver's door is closed and the ignition turned on, the system will return the driver's seat and steering column to the previous position. See **STEERING COLUMN** (page 24).

Note: *If the driver's seat or steering column are adjusted during entry or exit operation, automatic movement will stop.*

HEAD RESTRAINTS

⚠WARNING

Head restraints are designed to support the head, not the back of the neck. The head restraint must be positioned correctly to restrain rearward movement of the head in a collision.

⚠WARNING

Adjust the head restraint so that the top of the head restraint is above the center line of the head. An incorrectly adjusted head restraint increases the risk of death or serious injury in the event of a collision.

⚠WARNING

It is possible to swivel the head restraint forwards or backwards. For greater protection in the event of a collision, the head restraint should be adjusted so that it is as close to the back of the head as is practical.

⚠WARNING

Do not drive, or carry passengers with the head restraints removed from occupied seats. The absence of a correctly adjusted head restraint increases the risk of neck injury in the event of a collision.

⚠WARNING

Never adjust the head restraints while the vehicle is in motion.

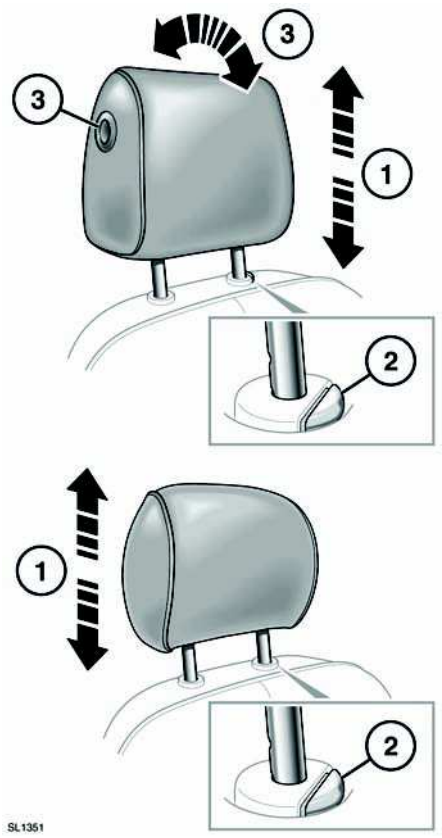

1. To raise, pull the restraint upwards.
2. To lower, depress the locking button and push down on the restraint.
3. To adjust the angle, press the locking button and move the restraint to the desired position.

The head restraint should be above the center line of the head, as previously shown.
See **SITTING IN THE CORRECT POSITION** (page 16).

Manual head restraints may be removed, if required (e.g. to fit larger child seats). Raise the head restraint to its uppermost position and press the locking collar. Lift the restraint out of the seatback.

⚠WARNING

Always store a removed head restraint securely.

Ensure the head restraint is refitted before the seat is used by a passenger.

To refit the head restraint, ensure it is facing the correct direction, insert the stems of the head restraint into the sockets and push it downwards until at least the first click.

FOLDING AND ERECTING THE REAR SEATS

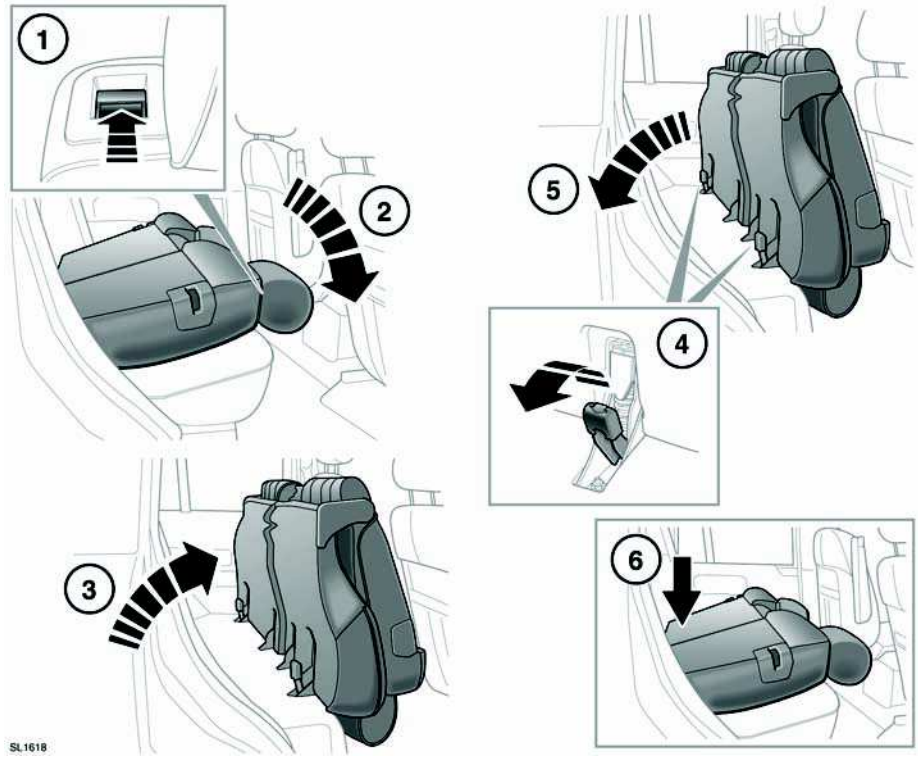

⚠WARNING

Never allow passengers to ride in the cargo area. In a collision, people riding in these areas are more likely to be seriously injured or killed. Do not allow anyone to ride in any area of your vehicle that is not equipped for passengers. Be sure everyone in your vehicle is in a seat and using their seat belt properly.

⚠WARNING

In a collision or sudden stop, unsecured objects could be thrown inside the vehicle striking and injuring occupants. Always properly store and secure cargo and other objects in the vehicle.

The split fold rear seat can be folded completely to accommodate large loads, or partially to accommodate large loads and still retain seating for passengers.

1. **To fold part or all of the seat:** Lift the lever on the top of the backrest.

2. Fold the backrest on to the seat base.
3. lift the whole assembly forward until it locks in the upright position.
4. **To erect:** Pull the release lever rearwards.
5. Push the seat assembly back on to the floor.
6. Press down on the seat where arrowed to fully engage the floor catches. The backrest can now be raised.

⚠WARNING

Always check that the locking mechanism is fully engaged after raising the backrest. If the backrests are not fully locked in place, red markers will be visible around the backrest levers.

RECLINING REAR SEATS

Note: *This feature will not operate if the rear window isolation switch has been activated.*

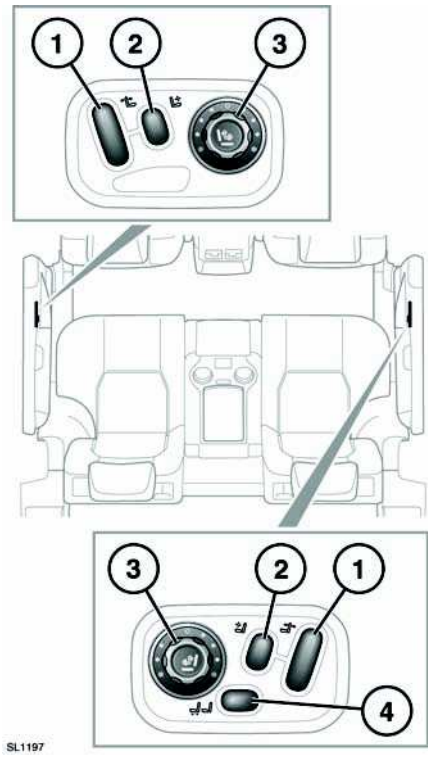

1. Seat angle adjustment.
2. Lumbar support adjustment.
3. Climate seat control (only with engine running).
   - Rotate clockwise from the **0** position to increase temperature.

     The seat heaters are thermostatically controlled and once selected will maintain a predetermined temperature.

- Repeatedly press the center of the control to select either the seat back or seat back and seat cushion. The relevant indicator(s) will illuminate.
- Rotate to the **0** position to turn off.

4. Front passenger seat forward or backward adjustment.

REAR SEAT HEAD RESTRAINTS

⚠WARNING

Adjust the head restraint so that the top of the head restraint is above the center line of the head. An incorrectly adjusted head restraint increases the risk of death or serious injury in the event of a collision or sudden stop.

⚠WARNING

Do not drive or carry passengers with the head restraint removed from an occupied seat. The absence of a correctly adjusted head restraint increases the risk of neck injury in the event of a collision or sudden stop.

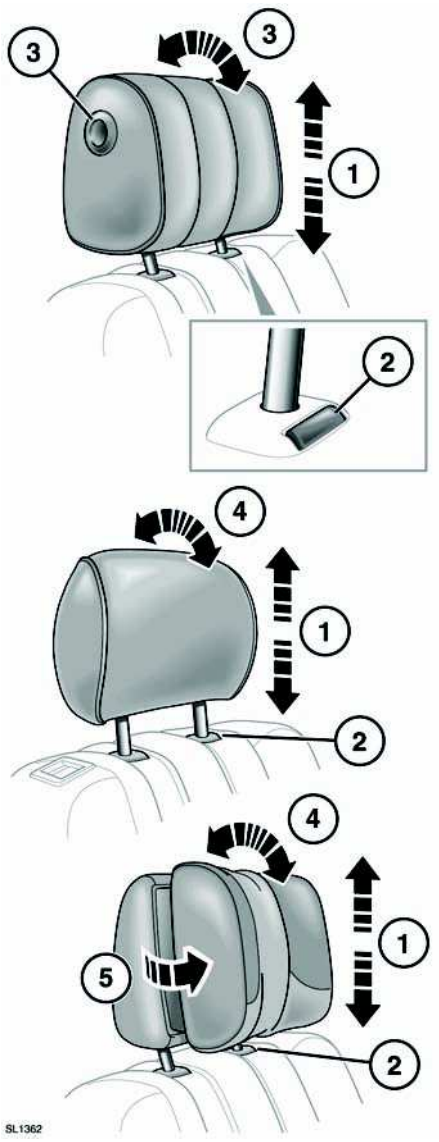

1. To raise, pull the restraint upwards.

2. To lower, depress the locking button and push down on the restraint.
3. To adjust the angle, press the locking button and move the restraint to the desired position.
4. Rotate the restraint to adjust the angle.
5. Pull the wing heads forward in to the first or second positions.

Head restraints may be removed, if required (e.g. to fit larger child seats). Raise the head restraint to its uppermost position and press the locking collar. Lift the restraint out of the seatback.

⚠WARNING

Always store a removed restraint securely.

To refit a head restraint, ensure it is facing the correct direction, insert the stems of the head restraint into the sockets and push it downwards until at least the first click.

STEERING COLUMN

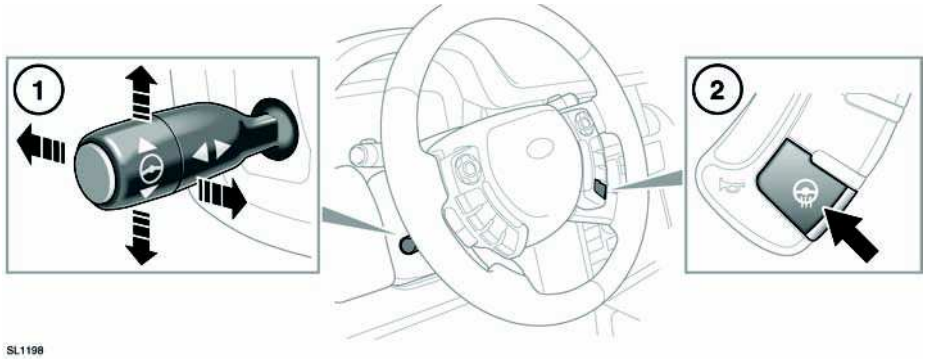

⚠WARNING

Never adjust the steering column while the vehicle is in motion. Doing so may cause a loss of control, potentially resulting in an accident.

1. **Steering column adjustment:** Move the control up or down to adjust the tilt/height.

   Move the control forwards or rearwards to adjust reach.

   Note: *The steering wheel position can be stored in the system's memory.* ***17, DRIVING POSITION MEMORY***

2. **Heated steering wheel:** Press to operate.

   When switched on the temperature is thermostatically controlled.

USING SEATBELTS AND CHILD SAFETY LOCKS

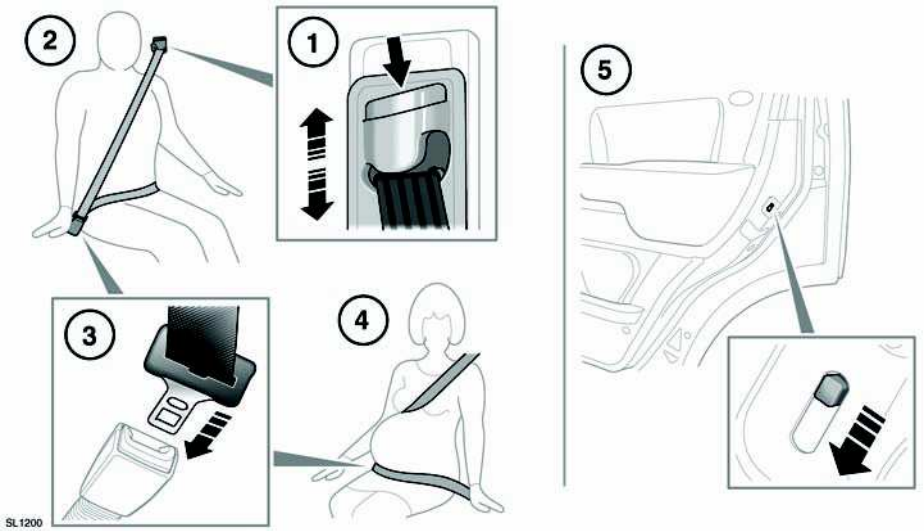

1. **SEAT BELT HEIGHT ADJUSTMENT:**
   Press to release the catch.

   With the catch depressed move the mechanism slide up or down to the required height. Ensure that the locking mechanism has engaged.

   When correctly positioned the seat belt should cross the collar bone at the mid-point between the neck and end of your shoulder.

   Where possible, rear seat passengers should adjust their seating position to achieve the same seat belt position.

⚠WARNING

Ensure that the height is correctly adjusted and the mechanism is locked in place before driving. Do not attempt to adjust the seat belt height once the vehicle is in motion. Doing so may cause you to lose control of the vehicle, or incorrectly adjust the seat belt.

⚠WARNING

Do not use comfort clips or other devices that create slack in the seat belt system.

⚠WARNING

No modifications or additions should be made by the user which will either prevent the seat belt adjusting devices from operating to remove slack, or prevent the seat belt assembly from being adjusted to remove slack. A slack seat belt offers a greatly reduced level of occupant protection in an impact.

2. **PUTTING ON A SEAT BELT:**
   Draw the belt out smoothly, ensure that the belt height, the seat and your position on the seat, are correct.

⚠WARNING

Seat belts are designed to bear upon the bony structure of the body and should be worn across your chest and shoulders and low across the pelvis. Never wear the seat belt as just a lap belt.

⚠WARNING

Seat belts should be adjusted as firmly as possible, consistent with comfort, to provide the protection for which they have been designed. A slack belt will greatly reduce the protection afforded to the wearer.

⚠WARNING

Belts should not be worn with the straps twisted.

⚠WARNING

Each belt assembly must only be used by one occupant. Never let children share a seat or seat belt.

⚠WARNING

Riding with a reclined seatback increases your chance of serious or fatal injuries in the event of a collision or sudden stop. The protection of your restraint system (seat belts and airbags) is greatly reduced by reclining your seat. Seat belts must be snug against your hips and chest to work properly. The more the seatback is reclined, the greater the chance that an occupant's hips will slide under the lap belt or the occupant's neck will strike the shoulder belt. Drivers and passengers should always sit well back in their seats, properly belted, and with the seatbacks upright.

⚠WARNING

Never place anything between you and the seat belt. It can be dangerous and reduce the effectiveness of the seat belt in preventing injury.

⚠WARNING

The air bag supplementary restraint system (SRS) is designed to add to the overall effectiveness of the seat belts. It does not replace them. Seat belts must always be worn.

⚠WARNING

Do not carry hard, fragile, or sharp items between your person and the seat belt. In an impact, the pressure on such items can cause them to break, which in turn may cause death or serious injury.

⚠WARNING

Seat belts should be worn by all vehicle occupants, for every journey, no matter how short. Failure to do so will greatly increase the risk of death or serious injury in the event of an accident.

⚠WARNING

Never wear just the lap belt or just the shoulder belt of a lap/shoulder diagonal seat belt. Both of these actions are extremely dangerous and may increase your risk of injury.

3. **FASTENING A SEAT BELT:**
   With the seat belt correctly positioned, place the metal tongue into the buckle nearest to you. Press it in until a click is heard.

   To release the seat belt, press the red button.

   Note: *When releasing the seat belt it is advisable to hold the belt before pressing the release button. This will prevent the belt from retracting too quickly.*

4. **SEAT BELT USE DURING PREGNANCY**:
   Position the lap strap comfortably across the hips beneath the abdomen. Place the diagonal part of the seat belt between the breasts and to the side of the abdomen, as illustrated.

⚠WARNING

Position the seat belt correctly for the safety of the mother and unborn child. Never wear just the lap strap, and never sit on the lap strap while using just the shoulder strap. Both of these actions are extremely dangerous, and may increase your risk of serious injury in the event of an accident or during emergency braking.

⚠WARNING

Never place anything between you and the seat belt in an attempt to cushion the impact in the event of an accident. It can be dangerous and will reduce the effectiveness of the seat belt in preventing injury.

⚠WARNING

Ensure that the seat belt is not slack or twisted.

5. **CHILD SAFETY LOCKS:**
   There is a locking lever on each of the rear doors. When the lever is in the down position the closed door is locked and cannot be opened from inside the vehicle.

SEAT BELT CARE

⚠WARNING

The belt should be replaced if webbing becomes frayed, contaminated or damaged.

It is essential to replace the entire assembly after it has been worn in a severe impact even if damage to the assembly is not obvious.

If any damage, wear, cuts, defects, or impaired operation are noted with the seat belts, the vehicle should be taken to a Land Rover Retailer/Authorized Repairer for immediate attention. Do not use the vehicle if the seat belts cannot be operated correctly.

Care must be taken to avoid contamination of the webbing with polishes, oils and chemicals, and particularly battery acid. Cleaning may safely be carried out using mild soap and water. Contaminated seat belts may not operate correctly in an impact and cannot be relied upon.

When using seat belts to restrain items other than occupants, take care to ensure that the belts are not damaged, or exposed to sharp edges.

SEAT BELT CHECKS

Note: *If the vehicle is parked on an incline, the seat belt mechanism may lock. This is not a fault and the belt should be gently eased out from the upper anchorage.*

The seat belts should be inspected regularly to check for fraying, cuts, wear to the webbing and the condition and security of the mechanism, buckles, adjusters and mounting points.

- With the seat belt fastened, give the webbing near the buckle a quick upward pull. The buckle must remain securely locked.
- With the seat belt unfastened, unreel the seat belt to the limit of its travel. Check that it unreels smoothly with no snatches or snags. Allow the belt to fully retract, again checking for smooth operation.
- Partially unreel the seat belt, then hold the tongue plate and give a quick forward pull. The mechanism must lock and prevent any further unreeling.

⚠WARNING

If any of the seat belts fail to meet those criteria, immediately contact your Land Rover Retailer/Authorized Repairer.

SEAT BELT REMINDER



If the driver's seat belt is not fastened when the vehicle is in motion, a chime will be heard and the seat belt warning indicator will illuminate. The warning chime and indicator will also be activated if the front passenger seat is occupied without the seat belt being fastened.

Note: *Objects on the front passenger seat may activate the seat belt reminder. It is recommended that any objects placed on the front passenger seat are secured using the seat belt.*

CHILD SAFETY LOCKS

If children are to be carried in the rear seat positions, it is recommended that the rear door interior handles are disabled.

See **USING SEATBELTS AND CHILD SAFETY LOCKS** (page 25).

CHILD SEATS

⚠WARNING

According to crash statistics, children are safer when properly restrained in the rear seats than in the front seat. The air bags alone will not prevent children from being seriously injured or killed. Never place a child in any type of child restraint or booster seat in the front passenger seat. Children under the age of 13 should always ride in the rear.

Make sure the child seat fits your child properly. Always check the seat manufacturer's instructions and labels for height and weight limits. For more specific guidance, consult your pediatrician.

There are three general types of child restraint systems: rear-facing infant seats, forward-facing toddler seats, and belt-positioning booster seats:

Rear-facing seats are used in the back seat from birth to at least 1 year of age and at least 20 lbs (9 kg).

Forward-facing toddler seats are used after outgrowing an infant seat until about age 4 and 40 lbs (18 kg).

Boosters seats are used in the back seat after outgrowing the toddler seat until vehicle seat belts fit properly without the booster. Usually at age 8 or at least 4 ft 9 in (145 cm).

⚠DANGER

Do not allow a baby or infant to be held or carried on the lap. The force of a crash can increase effective body weight by as much as thirty times, making it impossible to hold onto the child. At all times, children should be restrained in age and size appropriate child seats to reduce the risk of death or serious injury in a crash.

⚠WARNING

Children could be endangered in a crash if their child restraints are not properly secured in the vehicle. Always follow the instructions that accompany the child seat carefully.

Child restraint systems are designed to be secured in vehicle seats by use of the lap belts or the lap belt portion of a lap-shoulder belt. Children could be endangered in a crash if their child restraints are not properly secured.

The seat belts fitted to your vehicle are designed for adults and larger children. For their safety it is very important for all infants and children of 12 years and under to be restrained in a suitable child safety seat appropriate to their age and size.

If it is essential that a child travels in the front passenger seat (and national legislation permits this), Land Rover recommends that the following preparations are made before fitting the child restraint.

- Adjust the front passenger seat fully rearwards.
- Adjust the lumbar support to its minimum support position.
- Adjust the seat cushion to its highest position. If cushion rake adjustment is possible, adjust it to its lowest position.
- Adjust the seat back to the fully upright position.
- Adjust the seat belt adjustable upper anchorage to its lowest position.

⚠WARNING

Extreme hazard! Never place a rearward facing child restraint on the front passenger seat. The infant could be serious injured or killed if the air bag deploys.



This symbol, affixed to the end of the facia on the passenger side, warns against the use of a rear-facing child seat in the front passenger seat, when a front passenger air bag is fitted and operational.

SEAT BELT LOCKING MECHANISM

The rear outer seat belts and front passenger seat belts have a locking mechanism which improves the retention of child seats.

The procedure to install a child seat is as follows:

1. Place the child seat in the vehicle, attach the seat belt and secure the buckle in accordance with the manufacturer's fitting instructions.
2. Pull on the shoulder section of the belt to unreel all of the remaining webbing to the limit of its travel. This will engage the automatic locking feature which then acts as a ratchet, only allowing the webbing to retract.
3. Allow the seat belt to retract onto the child seat (a clicking sound will confirm that the ratchet has engaged), while firmly pushing the child seat into the vehicle seat.
4. Ensure that there is no slack in the seat belt, by pulling upwards on the shoulder belt immediately above the child restraint.

When the child seat is removed and all of the seat belt webbing is allowed to retract, the seat belt locking mechanism reverts to normal operation.

BOOSTER SEATS

In a situation where a child is too large to fit into a child safety seat but is still too small to safely use just the three point belt, a booster seat is recommended for maximum safety. Follow the manufacturer's instructions for fitting and use, then adjust the seat belt to suit.

CHILD RESTRAINT CHECK LIST

Every time a child travels in the vehicle observe the following:-

Non-LATCH child restraints

- Carefully follow the instructions provided by the manufacturer of the restraint system.
- Always use the appropriate child restraints and adjust harnesses for every child, every trip.
- Avoid dressing a child in bulky clothing and do not place any objects between the child and the restraint system.
- Regularly check the fit of a child seat and replace seats or harnesses that show signs of wear.
- Ensure that you have removed all slack from the adult seat belt.
- No child seat is completely child-proof. Encourage a child not to play with the buckle or harness.
- Never leave a child unsupervised in the vehicle.
- Activate the rear door child safety locks. See **USING SEATBELTS AND CHILD SAFETY LOCKS** (page 25). item **5**.

- Set a good example - always wear your seat belt.

LATCH child restraints

- Always attach the top tether when installing the LATCH seat.
- Carefully follow the instructions supplied with the child seat. Always give the LATCH seat a final pull, to ensure that the lower anchors are secure.
- Always use the appropriate child restraints and adjust the harnesses for every child, every trip.
- Make sure that a child falls into the correct weight range for the seat. Avoid dressing a child in bulky clothing and do not place any objects between the child and the restraint system.
- Regularly check the fit of a child seat and replace seats and harnesses that show signs of wear.
- No child seat is completely child-proof. Encourage children not to play with the buckle or harness.
- Never leave a child unsupervised in the vehicle.
- Activate the rear door child safety locks. See **USING SEATBELTS AND CHILD SAFETY LOCKS** (page 25). item **5**.
- Set a good example - always wear your seat belt.

⚠WARNING

Child restraint anchorages are designed to withstand only those loads imposed by correctly fitted child restraints. Under no circumstances are they to be used for adult seat belts, harnesses or for attaching other items or equipment to the vehicle.

CHILD SEAT POSITIONING

PROPER CHILD SAFETY SEAT USE CHART Buckle Everyone. Children Age 12 and Under in Back.			
	INFANTS	**TODDLER**	**YOUNG CHILDREN**
WEIGHT	Birth to at least 1 year old and at least 20 lb. (9kg).	Over 1 year and over 20 lb. (9kg) to about 4 years and 40 lb. (18kg) or child reaches highest weight or height allowed by child seat manufacturer.	Children who have outgrown their forward-facing toddler seat until vehicle seat belts fit properly, usually when a child is at least 4 ft 9 in. tall and 8 years old.
TYPE of SEAT	Rear-facing infant seat or convertible seat.	Convertible seat or Forward-facing toddler seat.	Belt-positioning booster seat.
SEAT POSITION	Rear-facing only.	Forward-facing.	Forward-facing.
ALWAYS MAKE SURE	Harness straps should be at or below shoulder level.	Harness straps should be at or above shoulder level.	Use booster seat with vehicle's lap and shoulder belt. Keep lap portion low and tight across the pelvis and upper thigh area to avoid abdominal injuries. Keep shoulder portion snug crossing the chest and shoulder. Never across the neck or face and never let a child place the shoulder belt behind their back.
CHILDREN RIDE IN REAR	Even with advanced air bags, children can be seriously injured or killed. Never place a child in any type of child restraint or booster seat in the front passenger seat. Children under the age of 13 should always ride in the back seat.		

When installing a child seat in the rear, the front seat must be moved forward and upwards to install any rear-facing child seat.

Care must be taken not to load any part of the child seat when repositioning the front seat. The space available for front seat occupants will be reduced by the fitment of any rearward-facing child seat.

⚠WARNING

Crash statistics show that children are safest when properly restrained in an child restraint system appropriate for their age and weight and secured in a rear seating position.

LATCH CHILD RESTRAINT ANCHOR POINTS

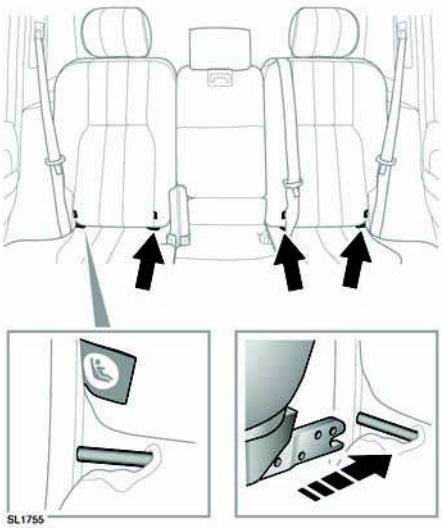

LATCH anchorage child restraints can be fitted only to the outer seat positions on the second row of seats.



This symbol is shown on a label sewn into the seats to indicate the position of the LATCH lower anchorages.

To install a LATCH anchorage child seat:-

1. Locate the LATCH locking mechanism.
2. For child seats fitted with **rigid** lower LATCH connectors, slide the child seat locking mechanism into the protective sleeves and onto the anchor bars.

   For child seats fitted with **non-rigid** LATCH connectors, connect the lower tether strap hooks to the anchor bars and tighten the straps.
3. If an upper tether is fitted to the child seat, ensure it is properly secured to the upper tether anchorages on the rear of the seats.

Test the security of the child restraint. To do this, attempt to pull the restraint away from the vehicle seat and twist the restraint from side to side. Even if the restraint appears secure, you should still check the anchor points visually, to ensure correct attachment.

⚠WARNING

Do not attempt to fit a LATCH child restraint to the center rear seating position. The anchor bars are not designed to hold a LATCH child restraint in this position. Install only using seat belts (non-LATCH system) and the top tether at this position.

⚠WARNING

If the restraint is not correctly anchored, there is a significant risk of injury to the child in the event of a collision or emergency braking.

⚠WARNING

If removing a head restraint in order to fit a child restraint, always secure the head restraint when storing it.

ATTACHING TETHER STRAPS

⚠WARNING

Child restraint anchorages are designed to withstand only those loads imposed by correctly fitted child restraints. Under no circumstances are they to be used for adult seat belts, harnesses or for attaching other items or equipment to the vehicle.

⚠WARNING

Always follow the child seat or restraint system manufacturer's instructions when fitting tether straps.

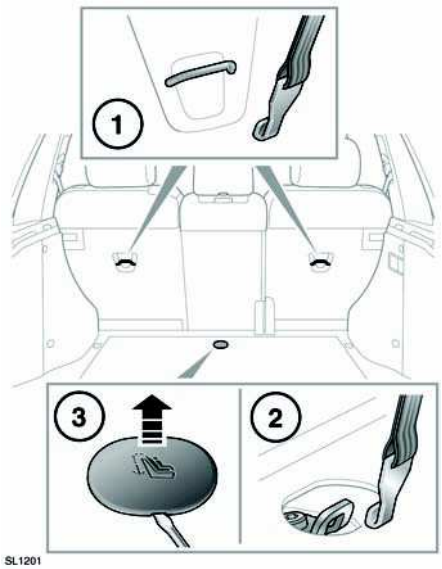

1. Your vehicle is equipped with tether strap anchorage points behind the second row seat frames. These should be used to attach straps from child seats or restraint systems.
2. A floor mounted tether anchorage is provided for the center seat position. Do not use this anchor position with a LATCH anchorage child seat.
3. Use a small, flat bladed screwdriver to remove the circular cover.

⚠WARNING

If a child seat or restraint system is to be fitted to the center seating position, the center armrest must be in the stowed position (folded into the seat).

⚠WARNING

When fitting a child seat or restraint system, always pass the tether strap over the top of the seat back and beneath the head restraint.

A. Install the child restraint securely in one of the rear seating positions.

B. Pass the tether strap over the seat back and beneath the head restraint.

C. Attach the tether strap hook to the tether anchor point on the back of the seat. Ensure that the tether strap hook is facing the towards the back of the seat (see illustration).

D. Tighten the tether strap according to the child restraint manufacturer's instructions.

AIR BAG SUPPLEMENTARY RESTRAINT SYSTEM (SRS)

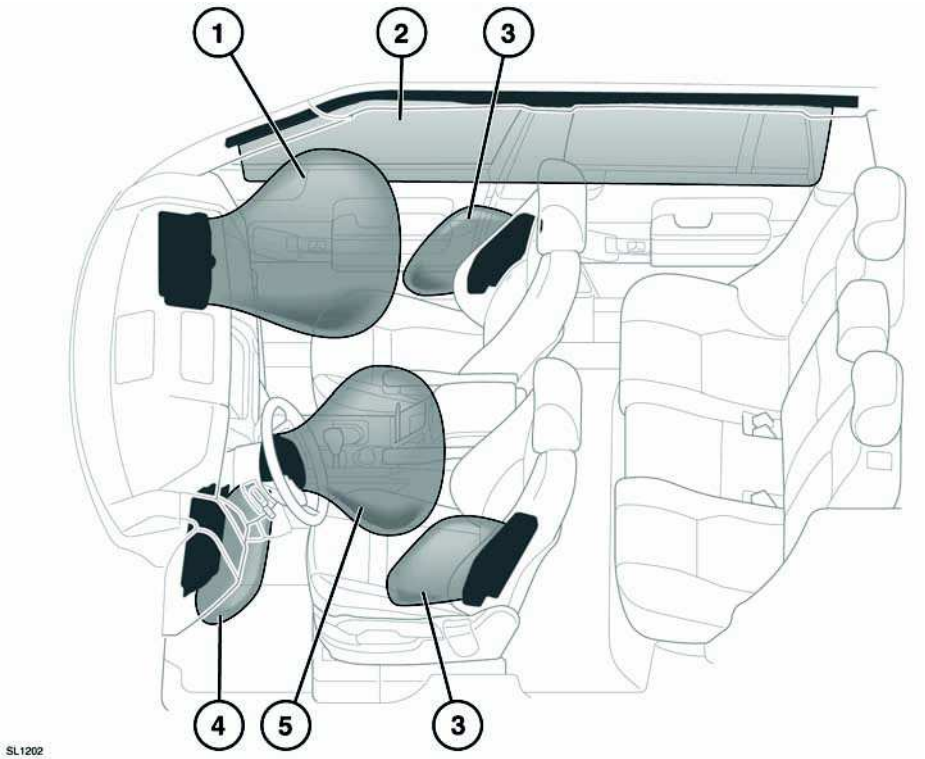

1. Passenger air bag.
2. Curtain air bag.
3. Side air bags.
4. Knee-bolster air bag.
5. Driver air bag.

Note: *The general location of air bags fitted to the vehicle are marked by the word AIR BAG.*

⚠ DANGER

High speed impacts may cause serious injury or death irrespective of safety features fitted to the vehicle. Always drive with caution and consideration for the vehicle's characteristics, road and weather conditions, and do not exceed any speed limits in force.

⚠DANGER

Seat belts should be worn at all times, by the driver and passengers in all seating positions. The air bag supplementary restraint system (SRS) cannot provide protection in some types of impact. Under these circumstances, the only protection will be provided by a correctly worn seat belt.

AIR BAG OPERATION

⚠WARNING

National Highway Traffic Safety Administration (NHTSA) recommends a minimum distance of 10 inches (25 cm) between an occupants chest and the driver's air bag module.

⚠WARNING

For the air bags to operate correctly the roof lining and door post trims must be in good condition, correctly fitted, and free from obstruction. Any damage, wear, or incorrect fitment should be referred to your Land Rover Retailer/Authorized Repairer as soon as possible for examination and repair.

⚠WARNING

Air bags inflate at high speeds. To minimise the risk of injury, ensure that all vehicle occupants wear correctly positioned seat belts, sit correctly in the seats, and position the seats as far back as practical.

⚠WARNING

Air bag inflation takes place instantaneously, and cannot protect against the effects of secondary impacts. Under these circumstances the only protection will be provided by a correctly worn seat belt.

⚠WARNING

Phone systems should be installed only by qualified persons familiar with the operation of, and requirements for, vehicles fitted with SRS. If you are in any doubt, seek advice from your Land Rover Retailer/Authorized Repairer.

Air bag deployment is dependent on the rate at which the passenger compartment changes velocity following the collision. Circumstances affecting different collisions (vehicle speed, angle of impact, type and size of object hit, etc.), vary considerably and will affect the rate of deceleration accordingly.

The Supplementary Restraint System components include:-

- SRS warning indicator.
- Rotary coupler.
- Air bag modules.
- Seat belt pre-tensioners.
- Air bag diagnostic control unit.
- Crash sensors.
- Air bag wiring harness.
- Seat occupancy sensor.
- Front passenger belt tension sensor.

The air bags and SRS are not designed to operate as a result of:

- Rear impacts.
- Minor front impacts.
- Minor side impacts.
- Heavy braking.
- Driving over bumps and pot holes.

Therefore, it follows that considerable superficial damage to the vehicle can occur, without causing the air bags to deploy.

Note: *If as a result of an impact, you believe the air bags should have deployed and they failed to do so, please call 1 (800) 637-6837 for advice, or arrange for a Land Rover representative to inspect the vehicle.*

⚠DANGER

High speed impacts may cause serious injury or death irrespective of safety features fitted to a vehicle.

⚠WARNING

The air bag SRS cannot provide protection in some types of impact. Under these circumstances the only protection will be provided by a correctly worn seat belt.

AIR BAG OBSTRUCTION

⚠WARNING

Do not obstruct the operation of the air bags by placing any part of your person or any objects in contact with, or close to, an air bag module. If the airbag inflates, objects or any part of your person could interfere with the inflation of the airbag or be propelled inside the vehicle, causing injury to the occupants.

Do not allow passengers to obstruct the operation of the air bags by placing feet, knees or any other part of the body, or any other objects in contact with, or in close proximity to, an air bag module.

Do not place objects between the air bag module and the seat occupant.

⚠WARNING

Do not use non-approved seat covers or accessory seat covers that have not been designed for use with air bags. If in doubt, consult your Land Rover Retailer/Authorized Repairer.

⚠WARNING

Ensure that a gap is maintained between the side of the vehicle, and the head and torso. This will enable unobstructed inflation of the curtain, and seat mounted side air bags.

⚠WARNING

Do not attach or position items on, or close to the roof lining, front seat backrests, or to an air bag cover, which could interfere with the inflation of the air bag or be propelled inside the vehicle, causing injury to the occupants.

Note: *Unauthorized modification of the vehicle or parts may invalidate the vehicle's warranty.*

Air bags cannot deploy correctly if they are obstructed. Examples of obstructions are:-

- Any part of an occupants body in contact with, or close to, an air bag cover.
- Objects placed on, or close to, an air bag cover.
- Clothing, sun screens, or other material hanging from grab handles.
- Clothing, cushions, or other material, covering seat mounted air bags.
- Seat covers which are not approved by Land Rover, or specifically designed for use with seat mounted air bags.

This list is not exhaustive and it remains the responsibility of the driver and passengers to ensure that the air bags are not obstructed in any way.

FRONT AIR BAGS

The front passenger and driver air bags are able to deploy in two stages, depending on the severity of the frontal impact. In a severe impact, the air bags inflate fully to offer maximum protection. In a lesser impact, full deployment is not required, so the air bags are partially inflated.

SEAT MOUNTED SIDE AIR BAGS

These are designed to protect the thorax region of the torso and will deploy only in the event of a side impact and then, only on the side of the impact.

CURTAIN AIR BAGS

The curtain air bags deflate at a slower rate than the front or side air bags, to afford greater protection from serious head injuries.

⚠WARNING

For the curtain air bags to deploy correctly, the roof lining and A post trim must be undamaged and fitted correctly. Any damage or suspect fitting should be referred to a Land Rover Retailer/Authorized Repairer for examination.

Note: *Curtain air bags will not inflate as a result of frontal or rear impacts alone.*

AIR BAG DEPLOYMENT EFFECTS

⚠WARNING

When an air bag inflates, a fine powder is released. This is normal and not an indication of a malfunction. The powder may cause irritation to the skin and should be thoroughly flushed from eyes and any cuts or abrasions. This powder can cause breathing difficulties for asthma sufferers or other people with respiratory problems. If this occurs, get out of the vehicle as soon as it is safe to do so or get fresh air by opening a window. If breathing problems persist, seek medical attention.

⚠WARNING

Air bag deployment is accompanied by a very loud noise which may cause discomfort and temporary loss of hearing.

⚠WARNING

After inflation, some air bag components will be very hot. Do not touch the air bag components until they have cooled sufficiently.

After inflation, the front and seat mounted side air bags deflate immediately. This provides a gradual cushioning effect for the occupants and also ensures that the driver's forward vision is not obscured.

AIR BAG WARNING LAMP



The air bag warning lamp is mounted in the instrument pack and will illuminate as a bulb check when the ignition is turned on.

⚠WARNING

Even with advanced air bags, children can be seriously injured or killed. Never place a child in any type of child restraint or booster seat in the front passenger seat. Children under the age of 13 should always ride in the rear.

If any of the following warning indicator conditions occur, the vehicle should be checked by your Retailer immediately.

- The warning lamp fails to illuminate when the ignition is turned on.
- The warning lamp fails to extinguish within 6 seconds of the ignition being turned on.
- The warning lamp illuminates at any time other than the bulb check, as previously described.

OCCUPANT DETECTION

The front passenger seat is fitted with an occupancy sensor system that determines if the seat is unoccupied, occupied by a person of low weight, a child seat or object, or is occupied by a heavier person or object.

The system consists of:

- A weight sensing pressure pad installed under the front passenger seat cushion.
  The sensor measures downward pressure/ weight on the seat cushion.
- A seat belt tension sensor integrated into the anchor point of the front passenger seat belt.
- A control unit installed under the front passenger seat.
- An air bag status indicator lamp, mounted on the overhead control panel.

⚠WARNING

When checking the operational status of the front passenger air bag, ensure that the ignition is switched on.



There are three operational states:

Occupancy status	Passenger air bag status	Status lamp illuminated
Completely empty	Deactivated	No*
Child restraint or low weight occupant/object	Deactivated	Yes
Heavy occupant/object	Activated	No

* It is possible to receive an intermittent status lamp condition with an empty seat. This is part of the adaptive behavior of the system and does not affect the status of the passenger air bag. If the status lamp remains illuminated when the seat is unoccupied or an adult is seated, contact your Retailer immediately.

Note: *A very small child in a child seat may not activate the PASS AIR BAG OFF lamp. In this situation the first line of information in the table will be applicable.*

⚠DANGER

Crash statistics show that children are safest when properly restrained in an child restraint system appropriate for their age and weight and secured in a rear seating position.

⚠DANGER

Do not use a child restraint on a seat protected by an operational air bag in front of it. Doing so presents a high risk of death or serious injury to the child in the event of an accident.

AIR BAG SERVICE INFORMATION

⚠WARNING

Do not attempt to service, repair, replace, modify, or tamper with, any part of the SRS. This includes wiring or components in the vicinity of SRS components. Doing so may cause the system to trigger, or render the system inoperative, either of which may result in serious injury or death.

⚠WARNING

Do not use any electrical test equipment or devices in the vicinity of SRS components or wiring. Doing so may cause the system to trigger, or render the system inoperative, either of which may result in serious injury or death.

⚠WARNING

For your safety, all of the following operations should only be carried out by a Land Rover Retailer/Authorized Repairer, or suitably qualified person:-

- Removal or repair of any wiring or component in the vicinity of any SRS components.

- Installation of electrical, or electronic, equipment and accessories.

- Modification to the front or sides of the vehicle exterior.

- Attachment of accessories to the front or sides of the vehicle.

Always contact your Retailer if:

- An air bag inflates.
- The front or sides of the vehicle are damaged.
- Any part of the Air bag Supplementary Restraint System (SRS) shows signs of cracking or damage, including trim covering air bags.

DISABILITY MODIFICATIONS

Occupants with disabilities which may require modifications of the vehicle, must contact a Retailer before any modifications are made.

LIGHTING CONTROLS

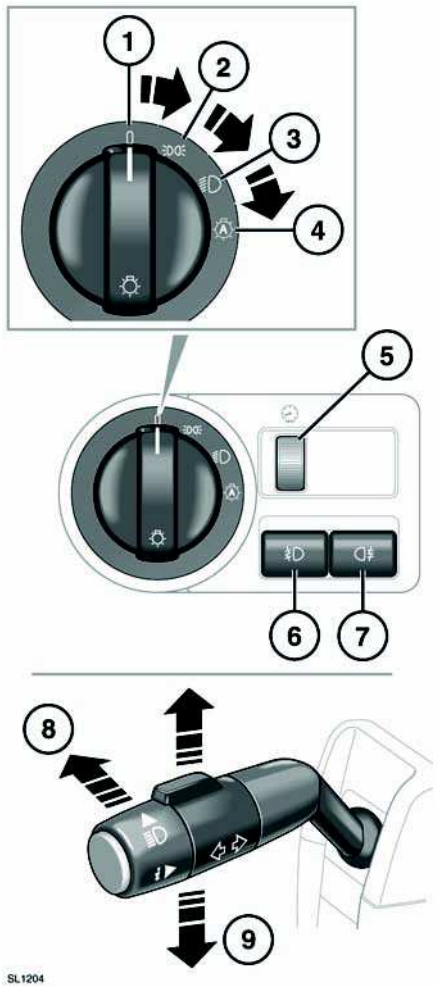

1. Headlamps/side lamps off.
2. Side lamps on.
3. Low beam headlamps on.
4. Autolamps on.

   With the switch in this position and the ignition on, the side lamps, low beam headlamps and licence plate lamps illuminate automatically when the ambient light level is low. Auto high beam and Headlamp courtesy delay may also be activated (see below).
5. Instruments, clock and switch illumination, rotate to adjust.
6. Front fog lamps on/off.

   When the front fog lamps are on, the front fog lamp warning indicator will illuminate.
7. Rear fog lamps on/off.

   When the rear fog lamps are on, the rear fog lamp warning indicator will illuminate.
8. Headlamp high/low beam.

   When low beam headlamps are switched on, push the stalk forward to change to high beam (the high beam warning lamp will illuminate).

   To flash the headlamps at anytime, briefly pull the stalk and release it.

   Note: *Do not use high beam where it may dazzle other road users.*
9. Push the stalk up or down briefly and release to flash the relevant turn signal three times. Can be useful when lane changing.

HEADLAMP COURTESY DELAY

This feature operates whenever the lamps master switch is left in the Auto position (**4**) and the ignition is turned off. The headlamps will remain illuminated for up to 240 seconds.

Note: *The time delay may be changed via the Vehicle settings menu. See* ***63, VEHICLE INFORMATION AND SETTINGS MENU***

AUTO HIGH BEAM

This feature automatically selects and deselects high beam, under specific conditions of road lighting and in the absence of other vehicle's lights. The system is only active when the ambient light drops below a predetermined level.

Note: *It is not recommended that auto high beam is used while driving off road.*

For auto high beam to become operational, the main lighting switch must be in the Auto position (**4**), with low beam headlamps selected.

The system will only activate when the vehicle speed exceeds 40 km/h (25 mph). The system will deactivate when vehicle speed drops below 24 km/h (15 mph).

To manually select high beam, move the stalk (**8**) to the high beam position as normal. To return to Auto high beam, move the stalk back to the central position.

To manually override to low beam from high beam, pull the stalk to the flash position and auto high beam will be cancelled. To return to auto high beam, push the stalk to the high beam position and then return it to the central position.



A green lamp in the instrument pack illuminates when auto high beam is selected.

To turn off auto high beam, turn the main lighting control from Auto (**4**) to headlamps.**63, VEHICLE INFORMATION AND SETTINGS MENU**

This feature can be disabled/enabled via the Vehicle settings menu.**63, VEHICLE INFORMATION AND SETTINGS MENU**

Note: *The following may affect the operation of auto high beam:-*

- *Highly reflective road signs.*
- *Vehicles with dim headlamps.*
- *Adverse weather conditions.*
- *Dirty sensor.*
- *Dirty, damaged, or fogged windshield.*

Note: *The system cannot be relied upon to activate or de-activate high beam in all possible circumstances. It remains the driver's responsibility to ensure correct use of the headlamps at all times.*

Note: *Ensure that the sensor on the back of the rear view mirror is not blocked or obstructed.*

DAYLIGHT RUNNING LAMPS

With the main lighting control in the Off position (**1**), low beam headlamps, side lamps, tail, license plate lamps and, where fitted, side marker lamps, will switch on automatically under the following conditions.

- The ignition is on.
- The gear selector is out of park.
- The parking brake is not applied (is released) - market dependent.



Unless required or prohibited by law, daylight running lamps can be disabled or enabled by your Retailer.

CONDENSATION

Misting of lamp lenses can occur under some atmospheric conditions. This will not affect the performance of the lamps and will clear during normal operation.

ADAPTIVE FRONT LIGHTING SYSTEM (AFS)

When cornering using low beam, AFS will swivel the headlamp beams to provide improved illumination in the direction of travel.

AFS is deactivated when:-

- Reverse gear is selected.

- The vehicle is stationary.
- Daylight running lamps are on.

If a system fault is detected the headlamps will attempt to move to the central position, then remain stationary. The AFS warning indicator will illuminate to indicate that a fault is present.



If the warning indicator illuminates, contact your Retailer as soon as possible.

⚠CAUTION

Xenon lamp units operate at a very high temperature. If there is a need to remove them and they have recently been in use, allow sufficient time for cooling before touching them.

CORNERING LAMPS

Additional lighting offset at 45 degrees from straight ahead is activated when cornering.This broadens the beam of the headlamps in the direction of the turn, improving visibility.

A cornering lamp is activated when a turn signal is made, vehicle speed is below 37mph (60km/h) and the steering wheel is turned through 70 degrees or more.

The feature will not operate when speed exceeds 44mph (70km/h).

Note: *Cornering lamps operate at speeds between 18-44 mph (30-70 km/h).*

Interior lights

INTERIOR LAMPS

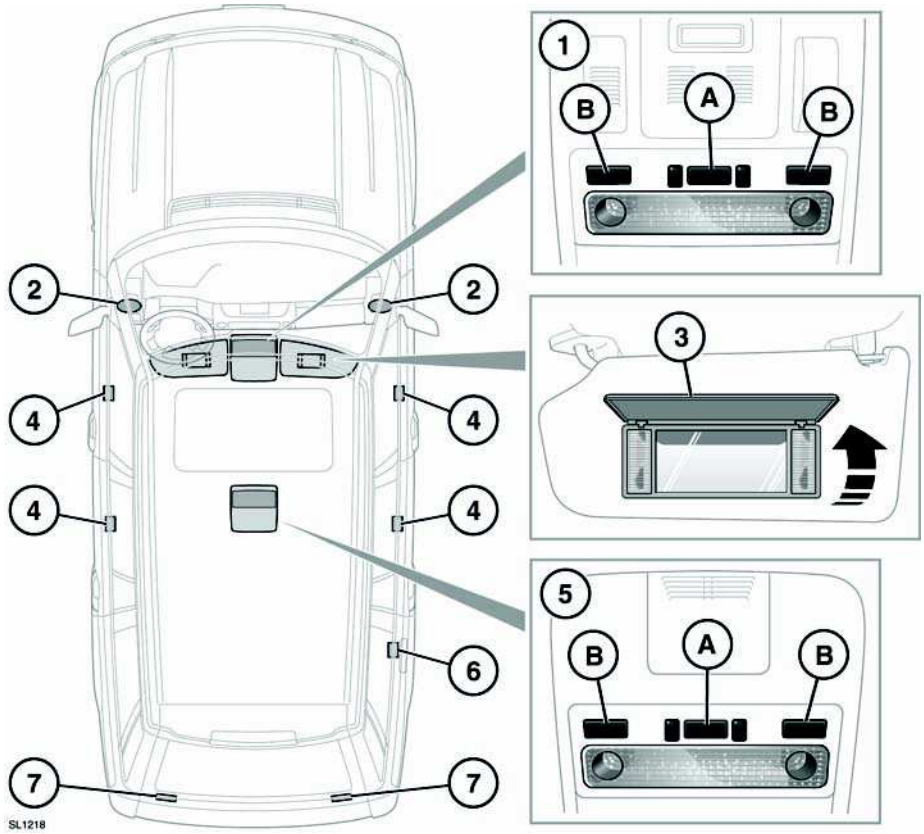

1. Map reading/interior lamps:
   - **A.** Main interior lamp control (on/off/Auto).

     To activate or deactivate Auto mode, press and hold for longer than 3 seconds. In Auto mode the lamps will illuminate when a door is opened.
   - **B.** Map light controls (on/off).
2. Upper footwell lamps.
3. Sun visor lamps:
   To operate, raise the cover on the vanity mirror.
4. Door puddle lamps.

5. Rear interior light control:
   - **A.** Main interior lamp control (on/off/Auto).

     To activate or deactivate Auto mode, press and hold for longer than 3 seconds. In Auto mode the lamps will illuminate when a door is opened.
   - **B.** Map light controls (on/off).
6. Luggage lamp.
7. Tailgate lamps.

INTERIOR COURTESY LAMPS

The interior, footwell, puddle, luggage and tailgate lamps illuminate automatically whenever the vehicle is unlocked, when the ignition is turned off, or when a door or tailgate is opened. The lamps remain illuminated for 60 seconds after the doors and tailgate are closed, or until the ignition is switched on.

WINDSHIELD WIPERS

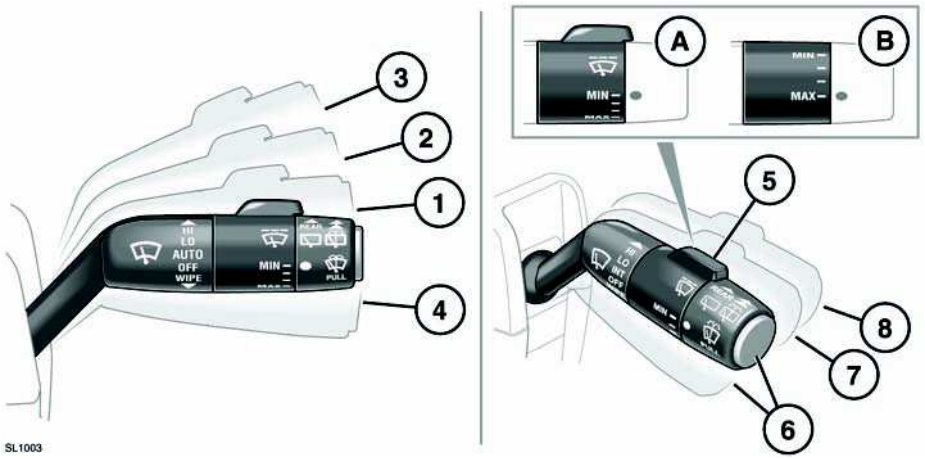

1. Rain sensor activated wipe or intermittent wipe (dependent on option fitted).
2. Low speed wipe.
3. High speed wipe.
4. Single wipe.
5. Rotate the control to adjust rain sensor sensitivity or on vehicles not fitted with a rain sensor, to adjust the intermittent variable delay (non-rain sensor vehicles):
   - **A.** Rain sensor minimum sensitivity. Intermittent wipe maximum delay.
   - **B.** Rain sensor maximum sensitivity. Intermittent wipe minimum delay.
6. Windshield washers:
   Pull the stalk, the windshield wipers will operate in conjunction with the washers for as long as the stalk is held in this position (maximum 10 seconds). The wipers will continue for a further 3 wipes after the stalk is released.

   This feature can also be activated by pressing the button on the end of the stalk.
7. Rear wiper, intermittent operation:
   Push the stalk to the first position to operate. The frequency of wipes will increase as the vehicle's speed increases

   If reverse gear is selected while the front wipers are active, the rear wipers will operate continuously.

   The rear wipers can be configured to operate continuously by your Retailer.
8. Rear wash/wipe:
   Push the stalk to the second position to operate.

   The wiper operates automatically during washing and continues for a further 3 wipes after the switch is released.

NOTICE

Do not operate the wipers on a dry screen. The drag on the wiper mechanism may cause damage.

NOTICE

In freezing or very hot conditions, ensure that the wipers have not stuck to the glass. The drag on the wiper mechanism may cause damage.

NOTICE

Remove any snow, ice or frost from the screen, around the wiper arms and blades and the screen scuttle, before operating the wipers. The drag on the wiper mechanism may cause damage.

Note: *If the wiper blades become stuck or jammed, an electronic cut-out may temporarily halt wiper operation. If this happens, switch off the wipers and the ignition. Clear any obstructions and free the wiper blades, before attempting to switch on the ignition.*

RAIN SENSOR VARIABLE DELAY

NOTICE

Ensure that the wipers are switched off before entering a car wash. If the rain sensitive wipers operate during the car washing process, damage may occur to the wiper mechanism.

A rain sensor in front of the rear view mirror is able to detect the presence and amount of rain/dirt/snow on the windshield and automatically activates the wipers accordingly. Static droplets may not be detected on initial start-up, use a single wipe to clear the screen.

To activate the rain sensitivity wipers, move the wiper stalk to position (**1**) and adjust the rain sensitivity control (**5**) as required. When rain sensitive wipers are activated and when sensitivity is increased, a single wipe will operate.

If the sensor detects constant rain, the wipers automatically operate continuously at normal or fast speed.

INTERMITTENT VARIABLE DELAY

With the stalk in position (**1**) rotate the switch (**5**) to increase or decrease the frequency of the intermittent wipe.

SPEED-DEPENDENT MODE

If vehicle speed drops below 5 mph (8 km/h) with the wipers operating, the wipers will switch to the next lowest speed. When vehicle speed increases to over 5 mph (8 km/h), the original wiper speed setting is restored automatically.



This feature can be enabled or disabled by your Retailer.

HEADLAMP POWER WASH

If the headlamps are on, operating the screen washer will also power-wash the headlamps.

Headlamp power-wash operates with every fifth operation of the screen washer, provided that ten minutes have elapsed since the last operation of the headlamp washers.

Note: *If the fluid level sensor in the screen washer reservoir detects a low level, the headlamp power wash is inhibited.*

REAR WIPER

If reverse gear is selected while the front wipers are operating, the rear wiper will begin automatically and continue as long as reverse gear is selected. The wipe interval is set to 6 seconds.

When stationary, if the tailgate is opened when the rear wiper is operating, it will stop. When the tailgate is closed, the wiper will start to operate again after 3 seconds.

HEADLAMP WASHERS

If the headlamps are on and there is sufficient liquid in the washer reservoir, operating the screen wash will also power-wash the headlamps.

The headlamp power wash will operate on every fifth operation of the screen washer, provided the headlamps are still switched on and approximately 10 minutes have elapsed since the last headlamp wash.

Switching the headlamps or ignition off and back on again, will reset the cycle.

Note: *The headlamp washers are inhibited when the washer fluid reservoir level is low.*

HEATED WASHER JETS

If the ambient temperature is low enough for icing of the washer jets, heating is applied while the ignition is on.

WINDOWS AND SUNROOF

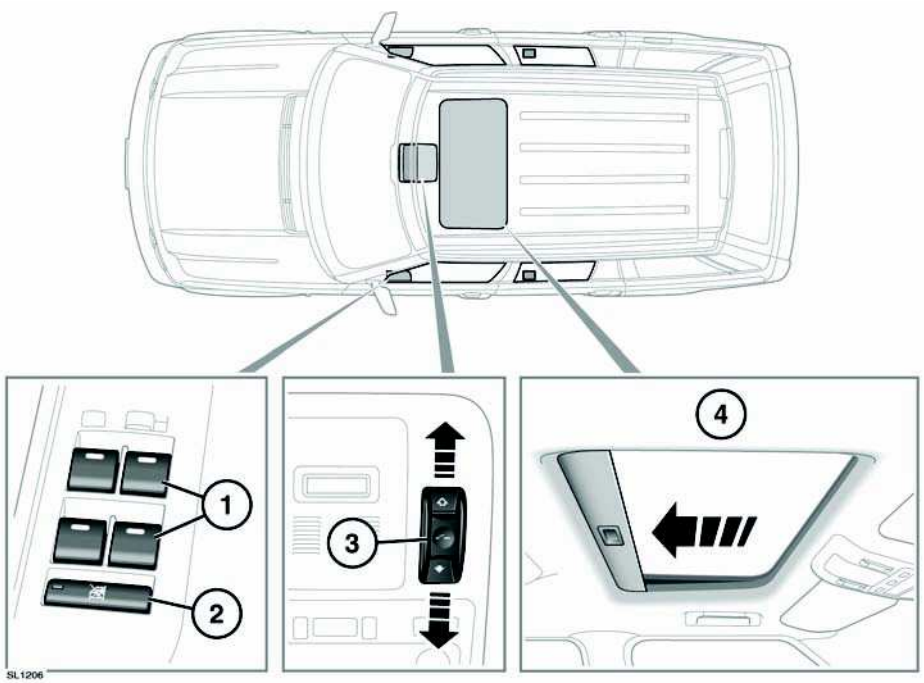

⚠WARNING

Ensure that you remove the Smart Key when leaving the vehicle. This will prevent unsupervised operation of the windows, which may result in an injury.

1. Window switches:

Press lightly and hold the top of a switch to lower and lift lightly and hold the top of a switch to raise.

The windows will operate for 5 minutes after the engine is switched off, as long as none of the doors are opened.

2. Rear window isolator switch.

The rear windows are isolated when the indicator light in the switch is illuminated.

⚠WARNING

If children are carried in the rear seats, the isolator switch should be used to prevent operation of the windows. If the windows are operated by young children there is a risk of serious injury or death.

3. Sunroof close/tilt switch:

NOTICE

Wherever possible remove any snow, ice, dirt and leaves etc. from the sunroof mechanism before closing. Failure to do so may damage the sunroof mechanism.

To tilt the roof: Press the center of the switch - the rear edge of the roof automatically rises to the fully tilted position.

To open the roof: Push the switch rearwards to the first position, the sunroof slides open until the switch is released. Push the switch to the second position and release, to fully open the roof in one operation.

To close the roof: Push the switch forwards to the first position, the roof closes until the switch is released. Push the switch to the second position to close the roof in one operation.

Note: *The sunroof will operate for 16 minutes after the ignition is turned off, provided that a front door is not opened.*

Note: *If the battery is disconnected or the power supply is interrupted while the sunroof is partially open, it will need to be recalibrated as follows:*
With the power supply reconnected, fully tilt the sunroof open. Continue to push the switch in the tilt position for approximately 20 seconds.
The sunroof can now be operated as normal.

Driving with the sunroof open: When driving with the sunroof open and unwanted drafts are experienced, open the front facia air vents to increase the blower speed. Do not operate the air conditioning.

4. Sunroof blind:

   The sunroof blind can be opened and closed manually, but will retract automatically when the sunroof is opened and will open slightly if the sunroof is tilted.

NOTICE

It is not possible to fully close the sunroof blind with the sunroof in the tilt position. Attempts to close the blind may damage the sunroof mechanism.

ONE-TOUCH WINDOW OPERATION

The front and rear windows have one-touch close operation. Briefly pull the switch up fully and release, the window will continue to raise until fully closed.

The front windows have one-touch open operation. Briefly press the switch down fully and release, the window will continue to lower until fully open. Pressing or pulling the switch again will stop the window.

REAR WINDOW OPERATION

The rear windows open in 2 stages:

- Briefly press the switch down fully and release; the window will open (2.5 - 3 inches) to the comfort stop position.

  This position reduces resonance (booming sound) that can occur when driving with a front window open. Open the rear window on the same side of the vehicle as the open front window, to reduce resonance.
- Briefly press the switch down fully and release a second time, to fully open the window.

ANTI-TRAP PROTECTION

⚠WARNING

Before closing a window or the sunroof, ensure that no occupants have any part of their body in a position where it could be trapped. Even with an anti-trap system, death or serious injury could occur.

⚠WARNING

The anti-trap mechanism does not operate when closing the sunroof from the tilted position. The sunroof can cause serious injury should a body part become trapped. Always ensure that the sunroof is free from obstructions before closing.

Anti-trap protection will stop window or sunroof movement if an obstruction or resistance is detected. Check the window or sunroof and its aperture and remove any obstructions.

EXTERIOR MIRRORS

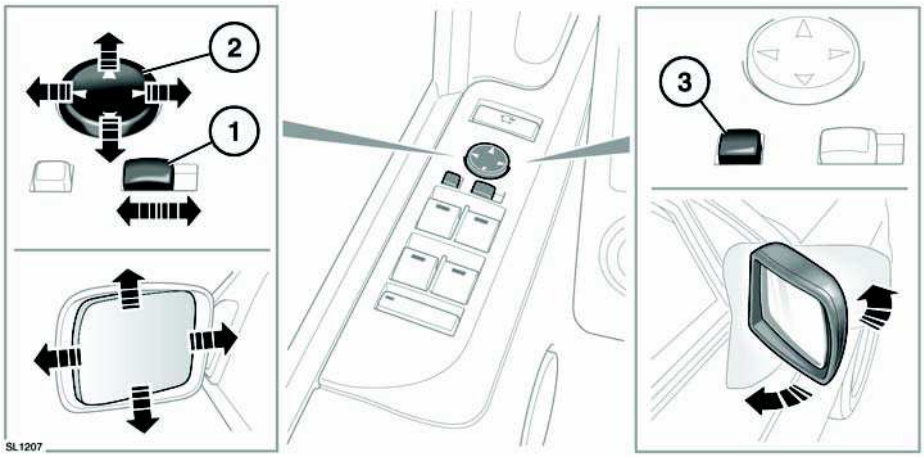

Note: *Objects viewed in exterior mirrors may appear further away than they actually are.*

1. Mirror select switch: Move left or right to select mirror to be adjusted.
2. Mirror adjustment switch: Move up/down/left or right to adjust the mirror glass.
3. Press the switch to fold/unfold the mirrors.

   Note: *If the mirrors are accidentally knocked out of position, an additional operation of the switch will re-synchronise them.*

Ice or fogging will disperse from the mirrors when the ignition is switched on, depending on external temperature.

The mirrors are designed to fold forwards or rearwards on impact. They can also be folded back towards the side windows into a park position to enable the vehicle to negotiate narrower openings.

Note: *The exterior mirrors position can be stored in the system's memory. See* ***17, DRIVING POSITION MEMORY***

MIRROR DIP WHEN REVERSING

When reverse gear is selected the door mirrors automatically adjust, providing an improved viewing angle for reversing.

The exact dip position can be adjusted when the mirrors are dipped. The next time reverse is selected, the newly adjusted position will be selected.

Note: *If vehicle speed exceeds 7.5 mph (12 km/h) in reverse, the mirrors will return to their normal driving position for enhanced visibility.*

The automatic mirror dip feature can be enabled or disabled from the Vehicle settings menu. See **63, VEHICLE INFORMATION AND SETTINGS MENU**

AUTOMATIC FOLDING

The mirrors will fold automatically when the vehicle is locked and unfold when it is unlocked.

BLIND SPOT MONITOR

⚠WARNING

The Blind Spot Monitor (BSM) system is a supplement to, not a replacement for, a safe driving style and use of the exterior and rear-view mirrors.

⚠WARNING

Please note that BSM may not be able to give adequate warning of vehicles approaching very quickly from behind or vehicles that are being overtaken rapidly.

⚠WARNING

BSM may not be able to detect all vehicles and may also detect objects, such as roadside barriers, etc.

⚠WARNING

The radar sensors may be impaired by rain, snow or road spray. This may affect the system's ability to reliably detect a vehicle/object within the blind spot.

NOTICE

Ensure that the warning indicators in the exterior mirrors are not obscured by stickers or other objects.

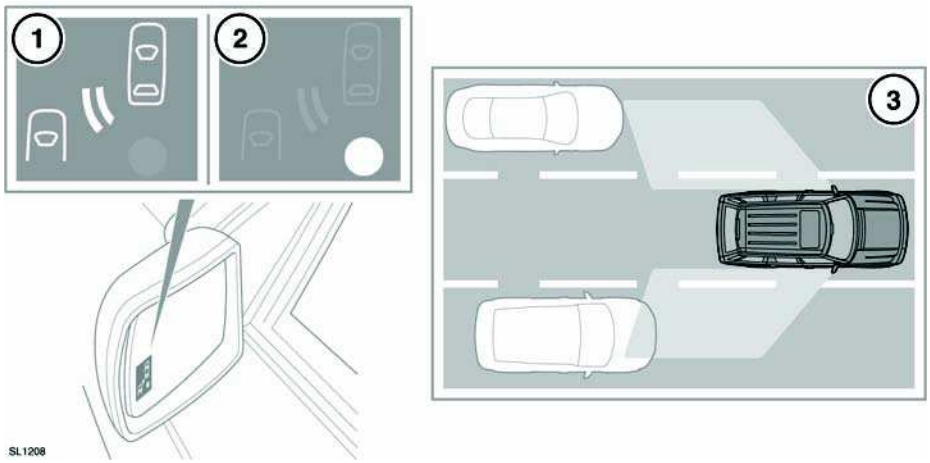

The Blind Spot Monitor (BSM) system monitors a zone that covers the area adjacent to the vehicle, that is not easily visible by the driver and is designed to identify any object overtaking the vehicle (**3**). The system uses a radar on each side of the vehicle to identify any overtaking vehicle/object within the blind spot area of the vehicle, while disregarding other objects which may be stationary or travelling in the opposite direction, etc.

If an object is identified by the system as being an overtaking vehicle/object, an **amber** warning icon (**1**) illuminates in the relevant exterior mirror, to alert the driver that there is a potential hazard in the vehicle's blind spot and therefore, that a lane change might be dangerous.

The radar monitors the area extending from the exterior mirror rearwards, to approximately 20 feet (6 metres) behind the rear wheels and up to 8.2 feet (2.5 metres) from the side of the vehicle.

Note: *This radar sensor is approved in all RTTE countries.*

Note: *The system covers an area of a fixed lane width. If the lanes are narrower than a typical carriageway lane, objects travelling in non-adjacent lanes may be detected.*

BSM automatically switches on and becomes active when the vehicle is travelling at more than 10 mph (16 km/h) in a forward gear. When the system initiates, it performs a self-check, during which the warning icons in the mirrors illuminate alternately for a short period of time.

The indicator dot (2) remains illuminated until forward vehicle speed exceeds 10 mph (16 km/h).

BSM is designed to work most effectively when driving on multi-lane highways.

Note: *If an overtaking vehicle is detected on both sides of the vehicle simultaneously, the warning icons in both mirrors will illuminate.*

Note: *BSM is automatically turned off when reverse (**R**) gear is selected, when the vehicle is in park (**P**) or if the vehicle is travelling below 10 mph (16 km/h). Under these conditions, an amber warning indicator within the exterior mirror is displayed.*

SENSOR BLOCKAGE

The BSM system will automatically disable if either of the sensors become completely obscured, an amber warning indicator dot (**2**) is displayed in the exterior mirror and the message **BSM sensor blocked** appears in the message center.

Note: *Blockage testing is automatically initiated when vehicle speed is above 20 mph (32 km/h) and will take at least two minutes of accumulated driving above this speed, to determine if the sensor is blocked.*

If the sensors become blocked, then please check that there is nothing obscuring the rear bumper and that it is clear from ice, frost and dirt.

SYSTEM FAULT

If a fault with one of the radar sensors is detected, an amber warning indicator dot is displayed in the exterior mirror and the message **BSM not available** is displayed in the message center.

Note: *Even if the detected fault only affects the radar sensor on one side of the vehicle, the whole system is disabled. If the fault is temporary, the system will operate correctly once the engine has been switched off and then on again.*

If a fault in the system occurs, consult your Retailer.

RADIO FREQUENCY SPECTRUM REGULATION STATEMENTS

United States of America

This device complies with part 15 of the FCC Rules. Operation is subject to the following two conditions:

- This device may not cause harmful interference, and
- this device must accept any interference received, including interference that may cause undesired operation.

Canada

This device complies with Industry Canada Standard IC-RSS-210. Operation is subject to

the following two conditions:

- This device may not cause interference, and
- this device must accept any interference, including interference that may cause undesired operation of the device.

Note: *The manufacturer is not responsible for any radio or TV interference caused by unauthorized modifications to this equipment. Such modifications could void the user's authority to operate the equipment.*

HOMELINK® TRANSMITTER

⚠CAUTION

Do not use the transceiver with any garage door opener that lacks the safety stop and reverse feature as required by safety standards.

⚠CAUTION

When programming the transceiver to a garage door opener or entry gate, ensure the area is clear. This will prevent potential harm or damage as the gate or garage door will activate during the program.

NOTICE

This device may suffer from interference if operated in the vicinity of a mobile or fixed station transmitter. This interference is likely to affect the hand-held transmitter as well as the in-car transceiver.

The door transceiver is located in the rear-view mirror. It can be programmed to transmit the radio frequencies of up to three different transmitters, which can be used to operate garage doors, entry gates, home lighting, security systems or other radio frequency operated devices.

Although this section mainly describes the procedures for a garage door opener, it equally applies to the previously mentioned applications.

BEFORE PROGRAMMING

NOTICE

When programming a device that may require you to press and re-press the hand-held transmitter (cycle), unplug the device during the cycling process to prevent possible motor failure.

For best results, fit a new battery to the hand-held transmitter of the garage door opener (or other device) before programming. If your garage door opener receiver (located in the garage) is equipped with an antenna, ensure that the antenna is hanging straight down.

PROGRAMMING

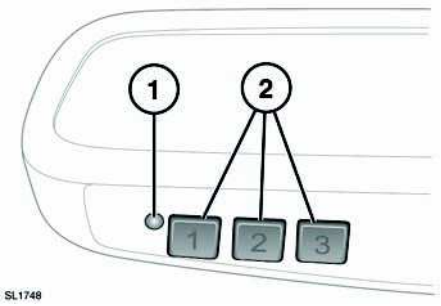

1. Status indicator lamp.
   Red - transmitter
   Green - auto dimming
2. Channel buttons.

With the engine switched off;

1. Ensure that the ignition system is on.
2. Press the two outer channel buttons on the vehicle transmitter until the red indicator lamp begins to flash. Release both buttons.

   Note: *This will erase all programming from the vehicle transmitter. If you are adding a setting to the transmitter, do not press both buttons, go straight to step 3.*
3. Hold the signal emitting end of the original garage door opener hand-held transmitter 2 to 6 inches (50 to150 mm) away from the vehicle transmitter, keeping the indicator lamp in view.

4. Simultaneously press and hold the chosen vehicle transmitter button and the hand-held transmitter button. Keep both buttons pressed. The red indicator lamp will flash slowly at first and then change to a fast flash. When the indicator lamp flashes rapidly, release both buttons. The rapid flashing lamp indicates successful programming.

   If, after 60 seconds, the indicator lamp does not flash rapidly, release both buttons and repeat the procedure starting with Step **3**. Position the hand-held transmitter at a different angle and/or distance.

5. Turn off the vehicle ignition.

To operate the vehicle transmitter in place of the original hand-held device, simply press the appropriate vehicle transmitter button. The red indicator lamp will illuminate while the signal is being transmitted.

If programming was apparently successful but it does not open your garage door, you may have a door that was manufactured after 1995 that is code protected or has a rolling code feature.

To determine if this is the problem, press the appropriate vehicle transmitter button. If the indicator lamp flashes rapidly for 1-2 seconds then lights continuously, your garage door is protected.

ROLLING CODE DEVICE EQUIPMENT PROGRAMING

Note: *The assistance of a second person, may make the following steps quicker and easier. Once the button has been pressed there are only 30 seconds in which to complete Step **3**.*

1. At the garage door opener receiver (motor head unit) in the garage, locate the learn or smart button/switch.
   - The name of the button or switch may vary between manufacturers.
2. Press and release the learn or smart button.
3. In your vehicle, firmly press the previously programmed button twice and release.
4. Press and hold briefly to complete the programming process.

The vehicle transmitter should now activate the rolling code device. If not, repeat the procedure but at step **3** press and release the button three times.

REPROGRAMING A SINGLE GARAGE DOOR OPENER BUTTON

To program a device to a previously programmed button:

1. Press and hold the desired pre-programmed vehicle transmitter button for at least 20 seconds, but no longer than 30 seconds, until the indicator lamp begins to flash.
2. Without releasing the button, position the device hand-held transmitter approximately 2 to 6 inches (50 to150 mm) away from the vehicle transmitter, keeping the indicator lamp in view.

3. Simultaneously press and hold the chosen vehicle transmitter button and the hand-held transmitter button. Keep both buttons pressed. The red indicator lamp will flash slowly at first and then change to a fast flash. When the indicator lamp flashes rapidly, release both buttons. The rapid flashing lamp indicates successful programming.

   If, after 60 seconds, the indicator lamp does not flash rapidly, release both buttons and repeat the procedure starting with Step **3**. Position the hand-held transmitter at a different angle and/or distance.

4. Turn off the vehicle ignition.

TO ERASE ALL PROGRAMING

For first time programming, ensure that the engine is switched off:

1. Ensure that the ignition is on (but with the engine switched off).
2. Press and hold the two outer buttons on the Homelink transmitter. Keep the buttons pressed until the indicator lamp begins to flash (this will take approximately 20 seconds), then release the buttons.

All memories have now been cleared.

Note: *Do not perform this procedure when programming the additional garage door opener buttons.*

ENTRY GATE PROGRAMMING

The technology of some entry gates requires you to press and re-press (cycle) the hand-held transmitter button every two seconds during programming.

Continue to press and hold the desired vehicle button while you cycle your hand-held transmitter until the indicator lamp flashes rapidly.

INFORMATION AND ASSISTANCE

NOTICE

It is recommended that when you sell or dispose of the vehicle, the programmed transceiver buttons be erased for security purposes.

For information on the range of available compatible products or accessories, or for assistance, you should contact your Retailer.

You can also contact the supplier's toll-free helpline on **1- 800- 355-3515** or contact **www.homelink.com**.

Note: *Keep the original transmitter for future use or programming procedures if, for example, you purchase a new vehicle.*

HomeLink® is a registered trademark owned by the Johnson Controls, Inc. Milwaukee, Wisconsin.

RADIO FREQUENCY SPECTRUM REGULATION STATEMENTS

United States of America

FCC ID:NZLBTPHL3

IC:4112A-NZLBTPHL

This device complies with part 15 of the FCC Rules. Operation is subject to the following two conditions:

- This device may not cause harmful interference, and
- this device must accept any interference received, including interference that may cause undesired operation.

Canada

IC-RSS-210:

Operation is subject to the following two conditions:

- This device may not cause interference, and

- this device must accept any interference, including interference that may cause undesired operation of the device.

Note: *The manufacturer is not responsible for any radio or TV interference caused by unauthorized modifications to this equipment. Such modifications could void the user's authority to operate the equipment.*

INSTRUMENT PANEL FEATURES

The TFT virtual instrument panel has a flexible configuration that allows the user to personalize the display. For instance, it can show 4 x 4 information when in Lo range and display speed in mph or kmh when selected from the menu. This is in addition to all the usual instrument panel features. Personalization can be made via the Settings menu. See **VEHICLE INFORMATION AND SETTINGS MENU** (page 63).

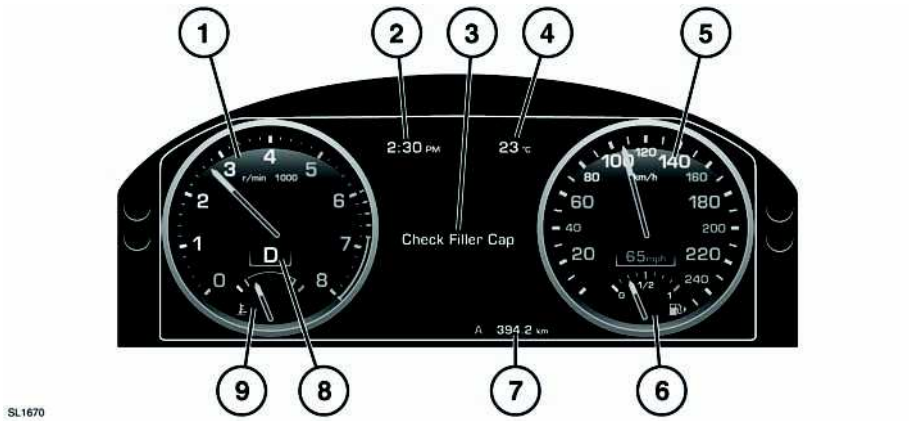

1. Tachometer.
2. Clock. 12 or 24 hour display.
3. Message center and Service interval indicator. Also displays Vehicle information and Settings accessed via the steering wheel menu control.
4. External temperature. Displays in Fahrenheit or Celsius.
5. Speedometer. Displays in MPH or KMH.
6. Fuel gauge.

NOTICE

Never allow the engine to run out of fuel. The resultant misfire can seriously damage the catalytic convertor.

If the amber low fuel warning lamp illuminates, the vehicle should be refuelled as soon as possible. The approximate distance that can be travelled on the remaining fuel can be viewed via the trip computer Distance to Empty function.

As a reminder for the location of the gas filler, there is an arrow next to the fuel pump symbol pointing to the relevant side of the vehicle.

7. Total distance (odometer) and trip recorder. Displays in miles or kilometres.
8. Gear selector position display
9. Temperature gauge

   If the pointer moves into the **H** section, the engine is overheating. Stop the vehicle as soon as safety permits and allow the engine to idle until the temperature reduces. If, after several minutes, the temperature does not reduce, switch off the engine and allow to cool. If the problem persists, seek qualified assistance immediately.

NOTICE

Serious engine damage can occur if the vehicle is driven while the engine is overheating.

Note: *If engine overheating occurs, there may be a noticeable reduction in engine power and the air conditioning may cease operation. This is a normal operating strategy, to reduce load on the engine and assist with cooling.*

MESSAGES

NOTICE

Do not ignore warning messages; take appropriate action immediately. Failure to do so may result in serious damage to the vehicle. If you are unsure about any messages, stop the vehicle, where safe, and seek qualified assistance.

For information regarding the individual messages, their meanings and any action required, please refer to the relevant section within this handbook.

CRITICAL WARNING MESSAGES

Critical warning messages are accompanied by an audible warning, and the message text may have the handbook symbol next to it. Critical warning messages are displayed until the condition causing the fault is rectified or the message is suppressed using the **OK** button on the steering wheel.

If the critical warning message is suppressed, a red warning icon will remain illuminated until the fault is rectified.

WARNING MESSAGES

Warning messages are accompanied by an audible warning. These messages are displayed until the condition causing the message changes or the message is suppressed using the **OK** button on the steering wheel.

Note: *Messages are displayed in order of importance, with critical warning messages being the highest priority.*

Active warning messages may be re-displayed by selecting **Show Warnings** on the vehicle information menu. See **VEHICLE INFORMATION AND SETTINGS MENU** (page 63).

SERVICE INTERVAL INDICATOR

The indicator will be displayed when a pre-determined distance or time before a required service is reached.

If driving continues beyond the displayed distance or time, the message **SERVICE REQUIRED** will be displayed. The counter will continue counting down with a negative value.

VEHICLE INFORMATION AND SETTINGS MENU

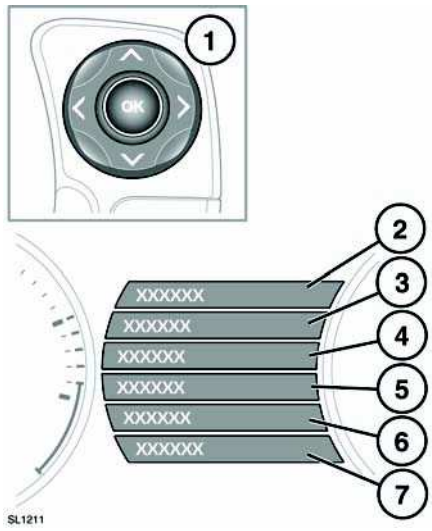

A number of vehicle features and display settings may be configured via the vehicle information and settings menu.

To display and navigate through the vehicle menu, operate the menu control on the steering wheel.

1. Steering wheel menu control.
   - Press the up/down arrows to scroll through a list. The current selection will be highlighted.
   - Press the right arrow to view a sub list.
   - Press the left arrow to return to the previous menu.
   - Press the **OK** button to select the highlighted item.
2. Select to close or return to main menu.
3. Select to view all active warning messages.
4. Select to access the **Vehicle Set-up** menu.The following features can be personalized:
   - Forward Alert.
   - Blind Spot Monitor.
   - Speed warning.
   - High Beam Assist.
   - Alarm Sensors.
   - Reverse-dip mirror.
   - Drive-away locking.
   - Easy Entry/Exit.
   - 2-Stage Locking.
   - Headlamp delay.
   - TPM Load Setting.
5. Select to access the **Trip Computer** menu.
6. Select to access the **Display Settings** menu.The following features can be personalized:
   - Language for message center display.
   - Temperature units.
   - Appearance of the instrument panel.
7. Select to access the vehicle **Service Menu**. Can be accessed only when the engine is not running.

Note: *Some personalisation options may not be available in all markets.*

TRIP COMPUTER

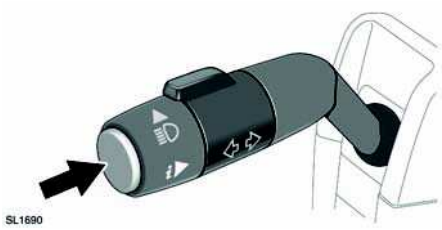

A short press (1 second or less) or a series of short presses of the button will change the trip computer display.

The options available are:-

- Date and Odometer.
- Trip distance.
- Trip average speed.
- Trip average fuel consumption.
- Instantaneous (short term average) fuel consumption.
- Range available from remaining fuel.
- Blank display.

There are 3 trip memories available, A, B and Auto. Use the settings menu to determine which trip memory is in use.

To reset trip A or trip B memory, display the trip memory you wish to reset and press and hold the button until the message **Resetting Trip A or B** is displayed. Continue to hold the button for another 2 seconds to reset the Auto trip memory.

To reset the fuel consumption figure, press and hold the button until the display clears.

Display units for the trip computer may be changed via the Vehicle information and settings menu.

AUTO TRIP MEMORY

The Auto trip memory resets each time the engine is started and the vehicle moves.

Trips can be added together to record a continuous journey. Press the button when Auto memory figures are displayed. **Adding last journey** will appear on the screen. Press the button for longer than 1 second to add previous trip information to the current trip. The cumulative total will be displayed.

If you wish to delete the previous trip you have added, again press the button while displaying the Auto memory figures. **Removing last journey** will appear on the screen. While this message is displayed, press and hold the button for longer than 1 second. The previous trip will be deleted from the total.

WARNING LAMPS

RED warning lamps are for primary warnings. A primary warning must be investigated immediately.

Seek qualified assistance before continuing.

AMBER and **YELLOW** warning lamps are for secondary warnings. Some indicate that a vehicle system is in operation, others indicate that the driver must take action and then seek qualified assistance as soon as possible

GREEN and **BLUE** lamps within the instrument panel indicate system status, such as green for turn signals, when in operation and blue for high beam.

BULB CHECK

A bulb check is initiated when the ignition system is switched on and lasts for 3 seconds (except for the air bag warning lamp which will remain on for 6 seconds). If any warning lamp remains on after this period, investigate the cause before driving.

Some warning lamps have associated messages displayed on the message center.

Note: *Not all warning lamps are included in the check (e.g. high beam headlamps and turn signals).*

CRITICAL WARNING MESSAGE (RED)



Illuminates when a critical warning message is available in the message center.

BRAKE SYSTEMS (RED)



USA.



Canada and Mexico.

Illuminates briefly when the ignition is switched on. If the lamp illuminates while driving, suspect low brake fluid level or a fault with the Electronic Brake Distribution (EBD) system. Stop the vehicle as soon as safety permits.

If the message **CHECK BRAKE FLUID** is displayed, check the brake fluid level and top-up if necessary.

If the lamp remains illuminated after topping up, seek qualified assistance before continuing.

PARKING BRAKE (RED or YELLOW)



USA.



Canada and Mexico.

Illuminates when the parking brake is correctly applied. If the lamp flashes red or illuminates yellow, a fault with the Electronic Parking Brake has been detected. Do not rely on the parking brake to secure the vehicle when parked.

Seek qualified assistance urgently.

BATTERY CHARGE (RED)



Illuminates briefly when the ignition is switched on and extinguishes when the engine is started. If the lamp remains on or illuminates while driving, there is a fault with the battery charging system.

Seek qualified assistance urgently.

SEAT BELT (RED)



Illuminates when the ignition is on and an occupied front seat belt is unbuckled. The lamp will extinguish after sixty seconds or when the relevant seat belt(s) is buckled. In some markets a warning chime will sound while the lamp is illuminated.

Note: *The lamp will remain illuminated until the seatbelts of occupied front seats are fastened correctly.*

ENGINE MALFUNCTION (RED)



Illuminates briefly when the ignition is switched on. If the lamp flashes or illuminates at any other time, there is a fault with the engine.

Avoid high speeds and seek qualified assistance urgently.

GENERAL WARNING/INFORMATION MESSAGE (AMBER)



Illuminates when a non-critical warning message or an information message is available in the message center.

BRAKE SYSTEMS (AMBER)



USA.



Canada and Mexico.

Illuminates briefly when the ignition is switched on. If the lamp illuminates after starting the engine or while driving, suspect worn brake pads or a fault with the Emergency Brake Assist (EBA) system. The vehicle can still be driven with care, but avoid heavy brake application.

Seek qualified assistance urgently.

DYNAMIC STABILITY CONTROL (AMBER)



Illuminates briefly when the ignition is switched on and extinguishes when the engine is started. If the lamp flashes while driving, the DSC system is active. If the lamp illuminates continuously while driving, there is a fault with the DSC system. The vehicle can still be driven, but the DSC system will not activate under wheel spin or slide conditions.

Seek qualified assistance as soon as possible.

DYNAMIC STABILITY CONTROL OFF (AMBER)



Illuminates when DSC is switched off.

Deactivating DSC also reduces the level of Electronic Traction Control intervention and may lead to an increase in wheel spin.

ANTI-LOCK BRAKING SYSTEM (AMBER)



Illuminates briefly when the ignition is switched on. If the lamp remains on or illuminates while driving, there is a fault with the ABS system. Drive with care, avoiding heavy brake application.

Seek qualified assistance urgently.

AIR BAG SRS (AMBER)



Illuminates briefly when the ignition is switched on and extinguishes when the engine is started. If the lamp illuminates while driving, there is a fault with the air bag system.

Seek qualified assistance as soon as possible.

ADAPTIVE CRUISE CONTROL (AMBER)



Illuminates when ACC is operating in follow mode.

REAR FOG LAMPS (AMBER)



Illuminates when the rear fog lamps are switched on.

EXTERNAL TEMPERATURE (AMBER)



Illuminates if the external temperature drops to 4°C (39°F) or less, a warning chime sounds, accompanied by a warning in the message centre. Take appropriate measures to defrost the vehicle and be aware that there may be ice on the roads.

TIRE PRESSURE MONITORING SYSTEM(YELLOW)



Illuminates briefly when the ignition is switched on. If the lamp remains on or illuminates while driving, one or more tires are significantly under-inflated. Stop the vehicle as soon as possible, check the tire pressures and inflate to the recommended pressure.

HIGH BEAM (BLUE)



Illuminates when the high beam headlamps are switched on or flashed.

AUTO HIGH BEAM (GREEN)



Illuminates when the auto high beam feature is enabled.

SIDE LAMPS (GREEN)



Illuminates when the side lamps are switched on.

FRONT FOG LAMPS (GREEN)



Illuminates when the front fog lamps are switched on.

TURN SIGNALS (GREEN)



The appropriate warning lamp will flash when the turn signals are operated.

HILL DESCENT CONTROL (GREEN)



Illuminates briefly when the ignition is switched on. Illuminates continuously when HDC is selected and HDC operating conditions are met. If the lamp flashes, HDC has been selected, but the operating conditions are not being met (e.g. vehicle speed is too high) or HDC fade-out is occurring.

LOW RANGE TRANSMISSION (GREEN)



Illuminates when Low range has been selected.

CRUISE CONTROL ACTIVE (GREEN)



Illuminates when cruise control is active.

TRAILER TURN SIGNALS (GREEN)



Illuminates briefly when the ignition is switched on and extinguishes when the engine is started.

If a trailer is attached, the warning lamp will flash in conjunction with the turn signals warning lamp. If the lamp fails to flash, the signal bulb on the trailer may be faulty.

FORWARD ALERT (GREEN)



Illuminates when Forward Alert is active.

WARNING LAMPS

RED warning lamps are for primary warnings. A primary warning must be investigated immediately.

Seek qualified assistance before continuing.

AMBER and **YELLOW** warning lamps are for secondary warnings. Some indicate that a vehicle system is in operation, others indicate that the driver must take action and then seek qualified assistance as soon as possible

GREEN and **BLUE** lamps within the instrument panel indicate system status, such as green for turn signals, when in operation and blue for high beam.

BULB CHECK

A bulb check is initiated when the ignition system is switched on and lasts for 3 seconds (except for the air bag warning lamp which will remain on for 6 seconds). If any warning lamp remains on after this period, investigate the cause before driving.

Some warning lamps have associated messages displayed on the message center.

Note: *Not all warning lamps are included in the check (e.g. high beam headlamps and turn signals).*

CRITICAL WARNING MESSAGE (RED)



Illuminates when a critical warning message is available in the message center.

BRAKE SYSTEMS (RED)



USA.



Canada and Mexico.

Illuminates briefly when the ignition is switched on. If the lamp illuminates while driving, suspect low brake fluid level or a fault with the Electronic Brake Distribution (EBD) system. Stop the vehicle as soon as safety permits.

If the message **CHECK BRAKE FLUID** is displayed, check the brake fluid level and top-up if necessary.

If the lamp remains illuminated after topping up, seek qualified assistance before continuing.

PARKING BRAKE (RED or YELLOW)



USA.



Canada and Mexico.

Illuminates when the parking brake is correctly applied. If the lamp flashes red or illuminates yellow, a fault with the Electronic Parking Brake has been detected. Do not rely on the parking brake to secure the vehicle when parked.

Seek qualified assistance urgently.

BATTERY CHARGE (RED)



Illuminates briefly when the ignition is switched on and extinguishes when the engine is started. If the lamp remains on or illuminates while driving, there is a fault with the battery charging system.

Seek qualified assistance urgently.

SEAT BELT (RED)



Illuminates when the ignition is on and an occupied front seat belt is unbuckled. The lamp will extinguish after sixty seconds or when the relevant seat belt(s) is buckled. In some markets a warning chime will sound while the lamp is illuminated.

Note: *The lamp will remain illuminated until the seatbelts of occupied front seats are fastened correctly.*

ENGINE MALFUNCTION (RED)



Illuminates briefly when the ignition is switched on. If the lamp flashes or illuminates at any other time, there is a fault with the engine.

Avoid high speeds and seek qualified assistance urgently.

GENERAL WARNING/INFORMATION MESSAGE (AMBER)



Illuminates when a non-critical warning message or an information message is available in the message center.

BRAKE SYSTEMS (AMBER)



USA.



Canada and Mexico.

Illuminates briefly when the ignition is switched on. If the lamp illuminates after starting the engine or while driving, suspect worn brake pads or a fault with the Emergency Brake Assist (EBA) system. The vehicle can still be driven with care, but avoid heavy brake application.

Seek qualified assistance urgently.

DYNAMIC STABILITY CONTROL (AMBER)



Illuminates briefly when the ignition is switched on and extinguishes when the engine is started. If the lamp flashes while driving, the DSC system is active. If the lamp illuminates continuously while driving, there is a fault with the DSC system. The vehicle can still be driven, but the DSC system will not activate under wheel spin or slide conditions.

Seek qualified assistance as soon as possible.

DYNAMIC STABILITY CONTROL OFF (AMBER)



Illuminates when DSC is switched off.

Deactivating DSC also reduces the level of Electronic Traction Control intervention and may lead to an increase in wheel spin.

ANTI-LOCK BRAKING SYSTEM (AMBER)



Illuminates briefly when the ignition is switched on. If the lamp remains on or illuminates while driving, there is a fault with the ABS system. Drive with care, avoiding heavy brake application.

Seek qualified assistance urgently.

AIR BAG SRS (AMBER)



Illuminates briefly when the ignition is switched on and extinguishes when the engine is started. If the lamp illuminates while driving, there is a fault with the air bag system.

Seek qualified assistance as soon as possible.

ADAPTIVE CRUISE CONTROL (AMBER)



Illuminates when ACC is operating in follow mode.

REAR FOG LAMPS (AMBER)



Illuminates when the rear fog lamps are switched on.

EXTERNAL TEMPERATURE (AMBER)



Illuminates if the external temperature drops to 4°C (39°F) or less, a warning chime sounds, accompanied by a warning in the message centre. Take appropriate measures to defrost the vehicle and be aware that there may be ice on the roads.

TIRE PRESSURE MONITORING SYSTEM(YELLOW)



Illuminates briefly when the ignition is switched on. If the lamp remains on or illuminates while driving, one or more tires are significantly under-inflated. Stop the vehicle as soon as possible, check the tire pressures and inflate to the recommended pressure.

HIGH BEAM (BLUE)



Illuminates when the high beam headlamps are switched on or flashed.

AUTO HIGH BEAM (GREEN)



Illuminates when the auto high beam feature is enabled.

SIDE LAMPS (GREEN)



Illuminates when the side lamps are switched on.

FRONT FOG LAMPS (GREEN)



Illuminates when the front fog lamps are switched on.

TURN SIGNALS (GREEN)



The appropriate warning lamp will flash when the turn signals are operated.

HILL DESCENT CONTROL (GREEN)



Illuminates briefly when the ignition is switched on. Illuminates continuously when HDC is selected and HDC operating conditions are met. If the lamp flashes, HDC has been selected, but the operating conditions are not being met (e.g. vehicle speed is too high) or HDC fade-out is occurring.

LOW RANGE TRANSMISSION (GREEN)



Illuminates when Low range has been selected.

CRUISE CONTROL ACTIVE (GREEN)



Illuminates when cruise control is active.

TRAILER TURN SIGNALS (GREEN)



Illuminates briefly when the ignition is switched on and extinguishes when the engine is started.

If a trailer is attached, the warning lamp will flash in conjunction with the turn signals warning lamp. If the lamp fails to flash, the signal bulb on the trailer may be faulty.

FORWARD ALERT (GREEN)



Illuminates when Forward Alert is active.

CONTROLS

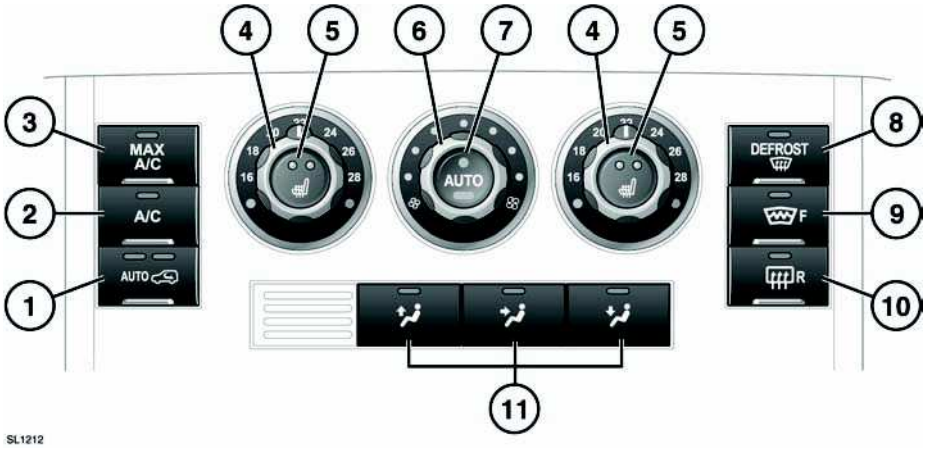

1. Recirculation with pollution sensor.
2. Air conditioning.
3. Maximum cooling.
4. Temperature controls. For individual driver/passenger settings.
5. Front seat heaters.
6. Blower speed control.
7. Auto mode.
8. Defrost.
9. Heated front windshield.
10. Heated rear screen.
11. Air distribution.

Note: *The indicator lights in the switches will illuminate when the function is selected.*

Note: *In low temperatures it is advisable to close the center face level vent and direct air flow from the outer face level vents towards the side windows. This will help to keep the windows clear of ice.*

RECIRCULATION WITH POLLUTION SENSOR

Press once to activate automatic air recirculation. In this mode, air recirculation is regulated to achieve optimum air conditioning performance.

Press again for manual control.

Press a third time to switch off.

Note: *The windows can fog if recirculation is used for long periods.*

AIR CONDITIONING

Press for cool and dehumidified air. Recommended for use throughout a journey to control window fogging and odors.

TEMPERATURE CONTROLS

Rotate to set a temperature.

Note: *The system will not achieve a temperature differential from left to right of more than 6°F (3°C).*

MAXIMUM COOLING

Press to turn on air conditioning and initiate maximum blower speed directed through the face level vents.

MAX A/C can be used after the engine is switched off, to provide residual engine heat for up to 20 minutes. It will operate until the engine cools or until switched off.

FRONT SEAT HEATERS

Press once to turn on high, twice to turn on low and a third time to turn off.

Note: *Seat heaters consume a great amount of battery power. They will operate only when the engine is running.*

BLOWER SPEED CONTROL

Rotate to adjust blower speed.

Rotate fully counter clockwise to turn the climate control system off.

AUTO MODE

Press **AUTO** to select fully automatic operation.

The system will adjust the heat output, blower speed, air intake, airflow distribution and recirculation to maintain the selected temperature(s) and reduce fogging without further adjustments.

The air distribution and blower controls may be operated independently to override Auto mode. If you do this, the indicator lamp on the **AUTO** switch will go out.

Press **AUTO** again to return to automatic operation.

DEFROST

Press to remove frost or heavy fogging from the windshield. The system will adjust the front blower output for maximum clearing and activate the rear blower. In addition the front and rear screen heaters will be activated.

Press again to switch off defrost mode. The screen heaters will remain on.

HEATED SCREENS

Press to operate the required screen heater. The screen heater(s) will operate for a predetermined timed period before automatically switching off.

The screen heaters will be automatically switched on if defrost mode is activated or if the external air temperature is low.

NOTICE

Do not attach labels to the rear screen. Do not scrape or use abrasive materials to clean the inside of the screen.

AIR DISTRIBUTION

Press to select the desired distribution setting.

Note: *More than one setting may be selected at a time to achieve the desired distribution.*

WATER DEPOSITS

The climate control system removes moisture from the air and deposits the excess water beneath the vehicle. Puddles may form but this is normal and is no cause for concern.

FACE LEVEL VENT TEMPERATURE CONTROL

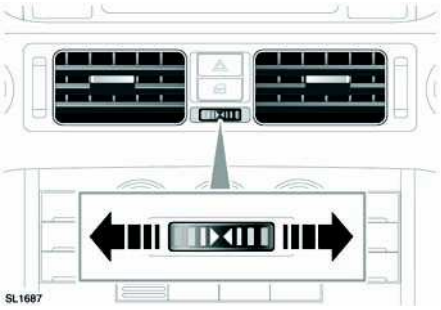

Temperature of air delivered through the climate control system via the center level vent can be fine tuned. Rotate the thumbwheel to adjust temperature.

CLIMATIC SEATS

Climatic seats provide heated or cooled ventilated air to either the seat back or seat back and cushion.

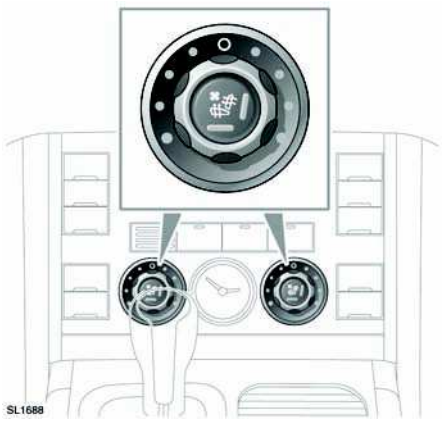

1. Rotate a control in either direction to adjust temperature. Red or blue indicators illuminate to show temperature selection.
2. Press the center of the control for seat back ventilation.
3. Press again for seat back and seat cushion ventilation. A further press will turn off seat cushion ventilation.
4. Rotate the control to **0** to turn off ventilation.

Note: *Climatic seats consume a great amount of battery power. They will operate only when the engine is running.*

REAR ENVIRONMENT



Press to activate rear climate control for the rear seat passengers. The indicator lamp will illuminate.

REAR ENVIRONMENT CONTROLS

There are two levels of rear environment climate control. These are referred to as 2 Zone and 4 Zone. 4 Zone gives greater flexibility of control for individual passenger settings.

Note: *When* **DEFROST** *is selected at the front, rear control is suspended until the defrost program ends.*

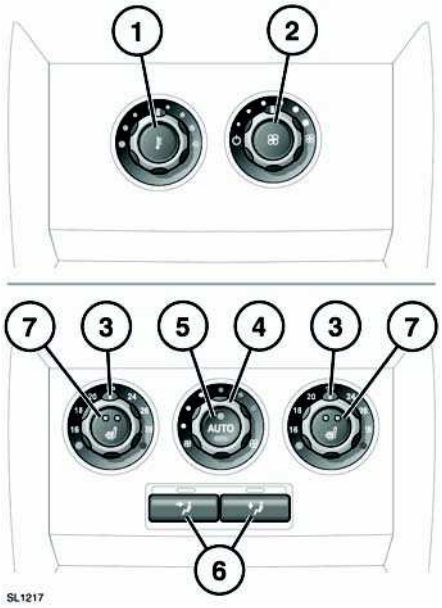

2 Zone

1. Temperature control.
2. Blower control.

   Until the blower control is activated, airflow is delivered at the same temperature as set by the front climate control.

   Note: *Temperature set at the front climate control will restrict levels set at the rear.*

4 Zone

1. Temperature controls.
2. Blower control.
3. Auto mode.

   Press **AUTO** to select fully automatic operation.

   The system will adjust the heat output, blower speed, air intake and airflow distribution to maintain the selected temperature(s) without further

adjustments.

The air distribution and blower controls may be operated independently to override Auto mode. If you do this, the indicator lamp on the **AUTO** switch will go out.

Press **AUTO** again to return to automatic operation.

4. Air distribution.

   Press to select the desired distribution setting.

   Note: *More than one setting may be selected at a time to achieve the desired distribution.*

5. Rear seat heaters.

   Press once to turn on high, twice to turn on low and a third time to turn off.

   Note: *Seat heaters consume a great amount of battery power. They will operate only when the engine is running.*

CUP HOLDERS AND STORAGE

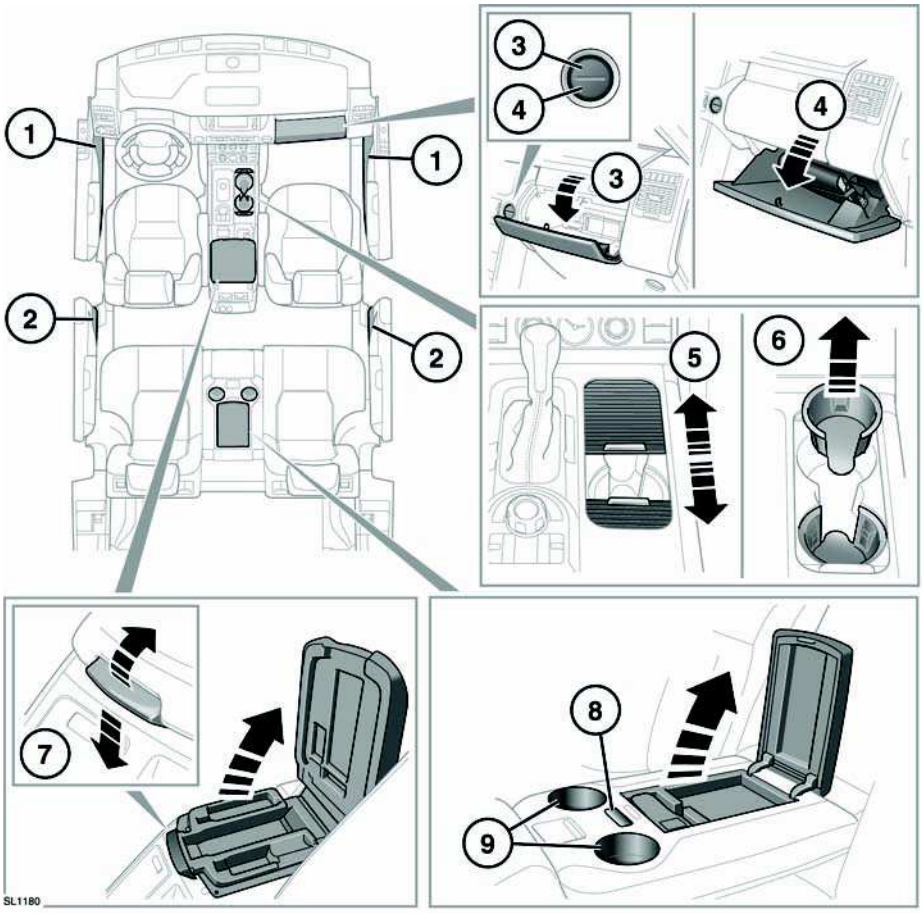

⚠WARNING

Ensure that any items stored in the vehicle are secure and cannot move. If the vehicle is involved in an accident, or subject to sudden braking or direction change, loose items can cause serious injury.

1. Door pockets.
2. Rear doors storage.
3. Press the upper part of the switch to open the upper glove box.
4. Press the lower part of the switch to open the lower glove box.
5. Slide open the covers to access the cup holders.
6. Center console cup holders. Lift out the inner sleeve to accommodate larger cups.

7. The cubby box has two operations. Lift the catch at the front of the lid to open the main box area. Push down on the catch and lift up the lid to access the trinket tray.
8. Rear cubby box. Fold the center armrest down. Press the button to release the lid.

   Note: *This area may already be in use if the vehicle is fitted with Rear Seat Entertainment.*
9. Cup holders.

AUXILIARY POWER SOCKETS

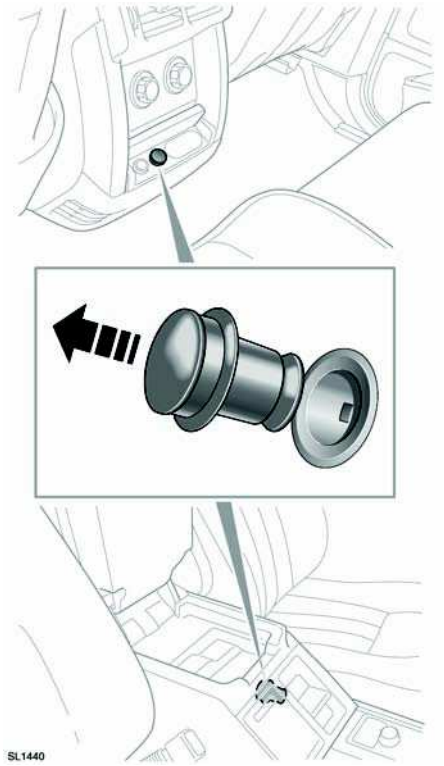

There are three power sockets in the center console, one for the rear and two for the front. The socket inside the cubby box is for accessory use only.

The rear loadspace socket is located behind a spring loaded cover.

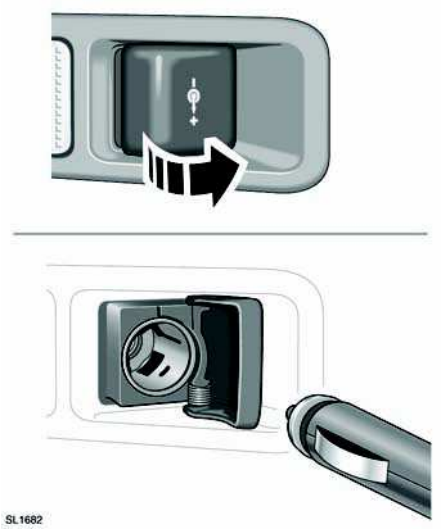

Note: *The rear loadspace socket is constantly live. If an accessory remains attached while ignition is off, battery drain may occur.*

NOTICE

Use only Land Rover approved accessories. Using any other equipment may damage the vehicle's electrical system. If you are in any doubt contact a Land Rover Retailer/ Authorized Repairer.

NOTICE

The engine should be running when using accessories for long periods. Failure to do so can discharge the battery.

Note: *Power sockets can be used to power approved accessories that use a maximum of 180 Watts.*

REAR LOADSPACE STORAGE AREAS

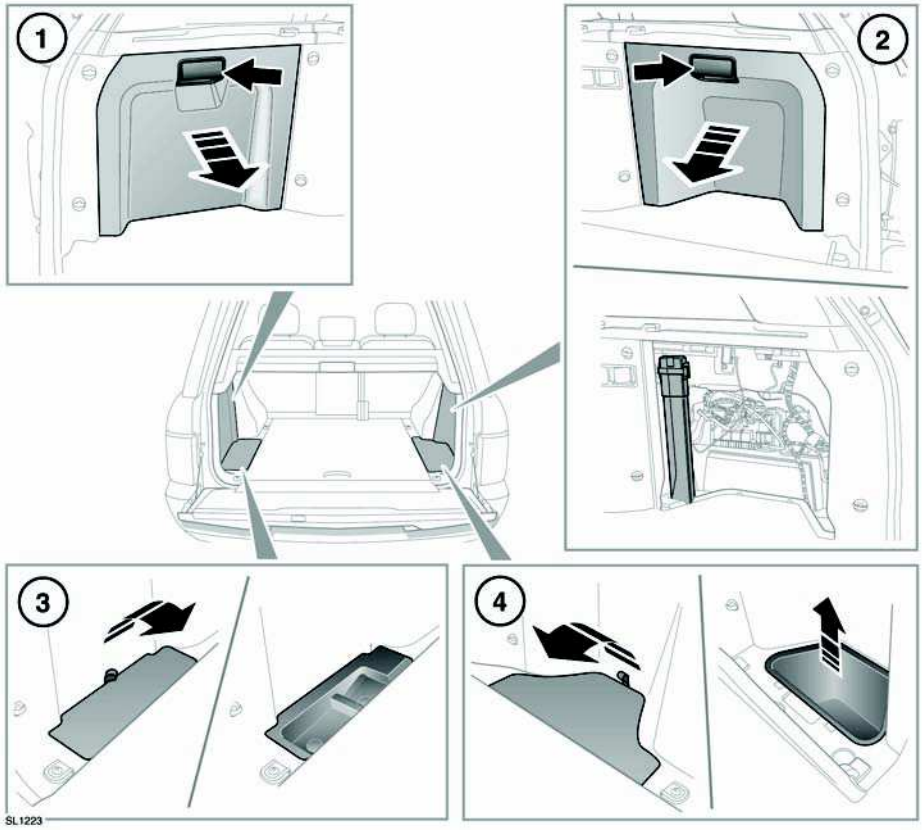

1. Access hatch.The optional DVD player is located here.

   Lift the catch and pull the hatch away from the side of the vehicle.

2. Access hatch. Used for warning triangle and rear fuse box.The emergency gas filler flap release is located here.

   Lift the catch and pull the hatch away from the side of the vehicle.

3. Left side floor storage.

4. Right side floor storage. The tray is removable. If a detachable tow hitch is fitted, this area is used to store the tow hitch.

REAR LOADSPACE COVER

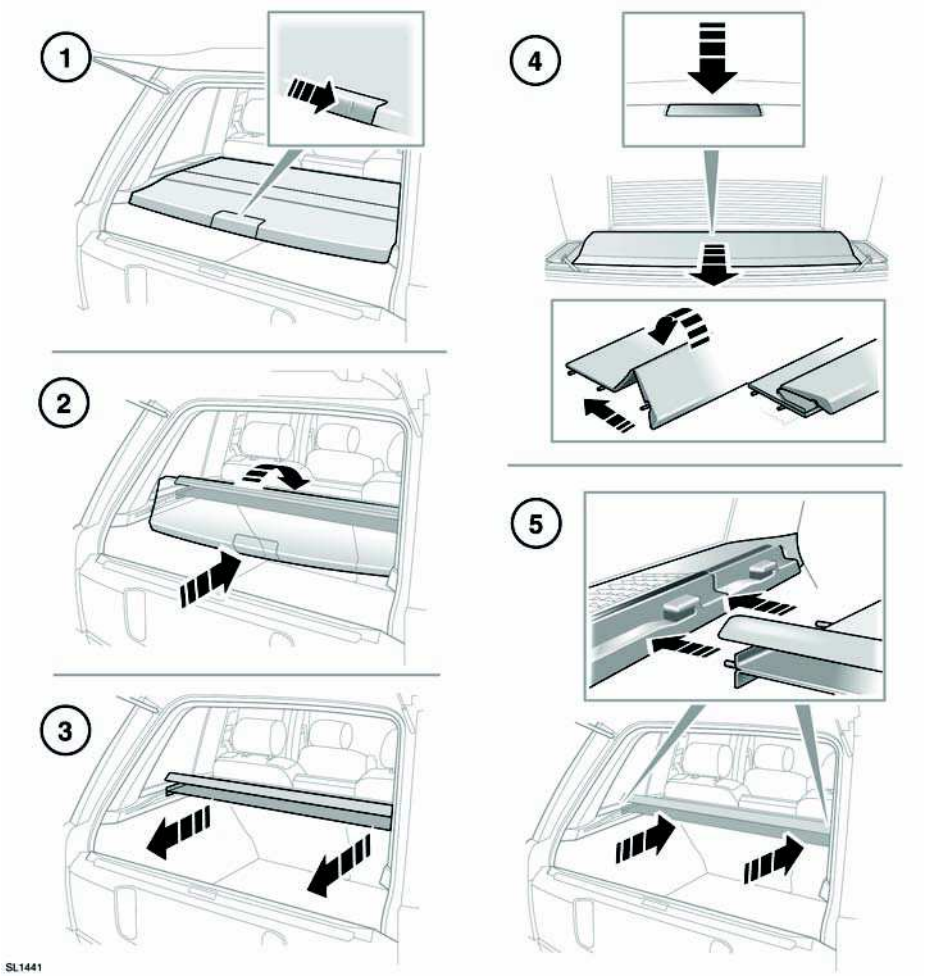

⚠WARNING

Never place objects on top of the loadspace cover. During an accident or sudden maneuver, loose objects can cause serious injury or death.

1. To fold the loadspace cover, push firmly down and forwards.
2. Lift slightly and fold forwards.
3. Pull the whole assembly rearwards to disconnect the locating pins. Remove and store safely.

⚠WARNING

Do not store the loadspace cover loose in the vehicle. During an accident or sudden maneuver, the loadspace cover could cause serious injury or death.

4. If removal from inside the vehicle is necessary, a head restraint may require removal.

   From the rear seat, push firmly down on the furthest edge of the cover while pulling it towards the rear seats. The cover will concertina fold allowing access to the loadspace area.

5. To refit the cover, place the assembly in position, engage the pins in the sockets and press firmly to lock the assembly in position.

6. If required, pull the outer edge towards the rear to cover the loadspace area.

LUGGAGE ANCHOR POINTS

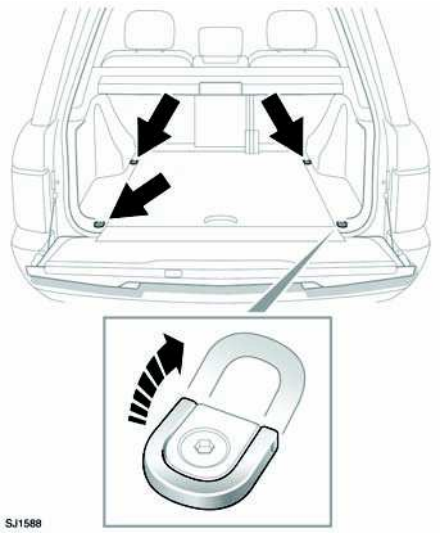

To assist in safely securing large items of luggage, four fixing points are located in the rear loadspace floor.

⚠WARNING

All items carried in the loadspace area should be properly secured. If the vehicle is involved in an accident, subject to sudden braking or change of direction, loose items can cause serious injury.

Note: *A range of approved luggage retention accessories are available from your Land Rover Retailer/Authorized Repairer.*

ROOF RACKS

⚠WARNING

A loaded roof rack can reduce the stability of the vehicle, particularly when cornering and during cross winds.

⚠WARNING

Driving off road with a loaded roof rack is not recommended.

Fit only a roof rack system that is designed for use with your vehicle. For further information, consult your Land Rover Retailer/Authorized Repairer.

The maximum load for a Land Rover approved roof rack system is 220lb (100kg). The weight of the approved roof rack system is not calculated as part of the load.

If an alternative roof rack system is used, the weight of that system must be included as part of the load weight.

Loads must be evenly distributed within the periphery of the rack. After travelling 30 miles (50km) check the security of the roof rack and any load.

LOADSPACE SAFETY NET

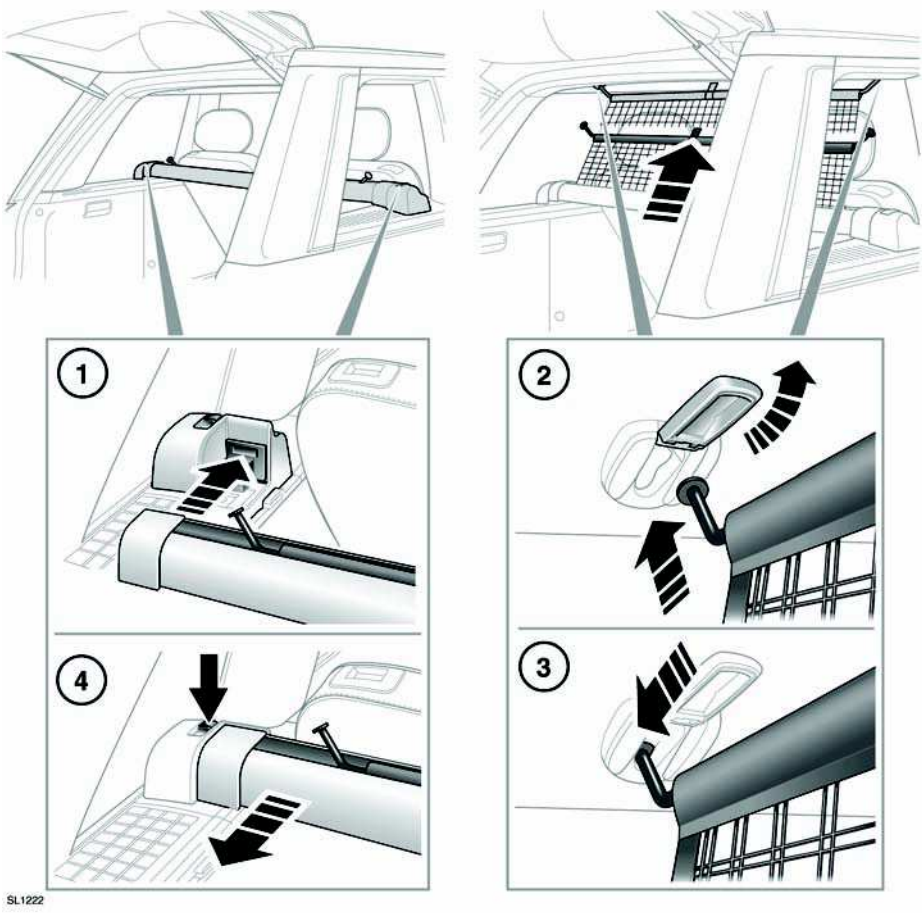

1. To use the optional safety net, first lock the assembly into position behind the top of the rear seats.
2. Open the mounting covers in the roof lining.
3. Pull the net out of the cassette assembly and hook the tabs into the mounting slots.
4. To remove the assembly, press down on the outer locks and move the assembly towards the rear of the vehicle. Store in a safe place.

RECOMMENDED TOWING WEIGHTS

Maximum permissible towing weights	On-road	Off-road
Unbraked trailers	1650lb (750kg)	1650lb (750kg)
Trailers with overrun brakes	7716lb (3500kg)	2204lb (1000kg)
Tongue weight	330lb (150kg)	330lb (150kg)

Note: *If a trailer with over-run brakes is used on-road, tongue weight can be increased to 550lb (250kg). Vehicle payload MUST be reduced by at least 220lb (100kg) to ensure that GVW and rear axle weights are not exceeded.*

Note: *When calculating rear axle loading, remember that the trailer tongue weight, the load in the vehicle's loadspace area, weight on the roof rack and the weight of rear seat passengers must all be added together.These combined weights must never exceed the GVW or the individual axle maximum loads.*

TRAILER ELECTRICAL CONNECTION

NOTICE

Connect only approved electrical circuits, which are in good condition, to the trailer socket.

The trailer socket provides a 5 amp output. If greater output is required, a high output accessory harness is available through your Land Rover Retailer.



When a trailer electrical connection is made and the vehicle's turn signals are used, the green trailer warning lamp will flash in time with the turn signals.

⚠WARNING

Suspension height changes are disabled while the Land Rover approved trailer electrical socket is in use.Use of an alternative electrical socket may lead to the vehicle being raised to Off-road height even with a trailer attached.

LEVELLING

To maintain vehicle stability, it is essential that the trailer is loaded so that it remains parallel to the ground. This is particularly important when towing twin axled trailers. Adjust the height of the hitch point if necessary.

To ensure that the vehicle is at the correct height when setting the towing hitch height, the engine should be running and the suspension set to on-road position. All doors must remain closed.

TOWING A TRAILER

⚠WARNING

Do not exceed the Gross Vehicle Weight (GVW), maximum rear axle weight, maximum trailer weight or tow hitch load (tongue weight). Exceeding any of these limits could cause instability and loss of control.

Never exceed the maximum weights for either the vehicle, or the trailer. Doing so can cause accelerated wear and damage to the

vehicle. It can also adversely affect vehicle stability and braking which in turn can lead to loss of control and increased braking distance, resulting in a rollover or crash.

To preserve handling and stability, only fit Land Rover approved towing accessories.

Never use towing eyes or lashing points to tow a trailer. They have not been designed for this purpose and doing so may cause them to fail, resulting in injury or death.

When towing, do not exceed 60 mph (100 km/h), or 50 mph (80 km/h) if the temporary spare wheel is in use.

The tongue weight of the vehicle's load carrying area and rear seat passengers, must never exceed the specified maximum rear axle load. Exceeding allowable vehicle and axle loads will increase the risk of tire and suspension failure, increase vehicle brake stopping distance and adversely affect vehicle handling and stability. This may result in a crash or rollover.

NOTICE

To avoid overheating the gearbox, it is not advisable to tow heavy trailer loads at speeds of less than 20mph (32km/h) in High range. Select Low range instead.

When towing a trailer over 4,400lb (2000kg), a smoother start can be achieved by moving off in Low range then changing to High range while on the move. See **RANGE CHANGING ON THE MOVE** (page 89).

The transmission will automatically select an appropriate gear shift pattern when towing at high altitude or during hill climbing and may retain lower gears for longer periods. This is to counter momentum loss caused by more frequent gear changing.

Ensure that the radiator is not obstructed in any way and that high quality fuel is used. Both these measures enable the cooling system and engine to operate efficiently.

ESSENTIAL TOWING CHECKS

- When calculating the laden weight of the trailer, remember to include the weight of the trailer, plus the weight of the load.
- If the load can be divided between the vehicle and trailer, loading more weight into the vehicle will generally improve stability. Do not exceed the vehicle's weight limits.
- For maximum stability, ensure that loads are properly secured and unable to shift position during transit. Also, position loads so that most of the weight is placed close to the floor and, where possible, immediately above or close to the trailer axle(s).
- Increase rear tire pressures of the towing vehicle to those for maximum Gross Vehicle Weight conditions.
- Ensure trailer tire pressures are set to trailer manufacturer's recommendations.
- If the vehicle is loaded to maximum Gross Vehicle Weight (GVW) the tongue weight is limited to 330lb (150kg). See **WEIGHTS** (page 209).
- Ensure that a suitable breakaway cable or secondary coupling is used. Refer to the trailer manufacturer's instructions for guidance.
- Ensure that the tow ball is secure.
- Check the operation of all trailer lights.

⚠WARNING

Do not loop the breakaway cable over the tow ball as it may slide off.

TOWING HITCH

The draw bar design will vary depending on its intended use. Store a tow bar in a bag and strap it to an anchorage point in the rear stowage area.

⚠WARNING

Never leave the tow bar loose in the vehicle. It could become a projectile in the event of heavy braking or an accident.

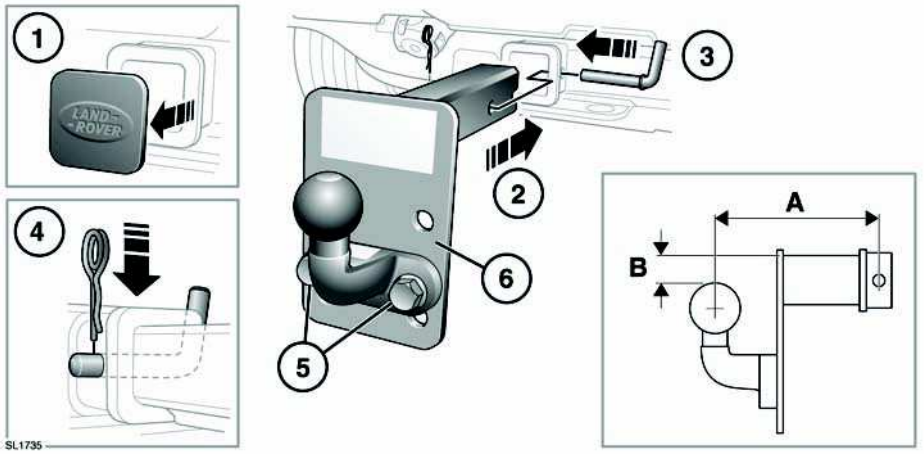

1. Remove the plastic cover from the tow bar mounting and stow safely.
2. Insert the tow bar assembly into the receiver.
3. Insert the securing bar.
4. Insert the straight part of the securing pin into the securing bar and push down firmly. Ensure that the pin is locked in position.
5. If the tow ball/hitch height is adjustable, remove the fixing bolts.
6. Move the tow ball/hitch to an alternative position on the drop plate and refit the bolts. Tighten to 170 Nm.

Note: *The hitch receiver is rated as a Class III. When selecting a drawbar for the receiver, the following dimensions must be adhered to:*

A. Maximum hitch length from the securing bar to center of ball - 11in (280mm).

B. Minimum drop height from top of receiver to top of ball - ball is level with top of receiver.

Maximum drop height from top of receiver to top of ball - 3in (77mm).

STEERING COLUMN LOCK

NOTICE

During vehicle recovery, the Smart Key must remain inside the vehicle, so that the steering column remains unlocked.

Your vehicle is fitted with an electronic steering column lock. The column unlocks when a Smart Key is detected inside the vehicle.

If any malfunction of the steering column lock occurs, **STEERING COLUMN LOCKED** will be displayed in the message center. If this occurs:

1. Lock and then unlock the vehicle using the Smart Key.
2. Try again to unlock the steering column lock, by turning the steering wheel gently to the left and right.
3. If the problem persists, seek qualified assistance immediately.

SWITCHING ON THE IGNITION

To turn on the ignition without starting the engine. Ensuring the brake pedal is not depressed and with a valid Smart Key present in the vehicle, press the START/STOP button and hold until the warning indicators illuminate, then release the button.

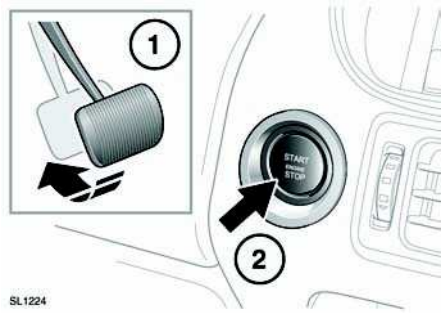

NOTICE

If the brake pedal is applied when the start/stop button is pressed, the engine will start.

BATTERY CHARGING - RED



Illuminates as a bulb check when the ignition is turned on and extinguishes once the engine is running. If it remains on, or illuminates while driving, a fault with the battery charging system is indicated. Seek qualified assistance urgently.

KEYLESS STARTING

⚠ DANGER

Never start the engine and leave it running when the vehicle is in an enclosed space. Exhaust gases are poisonous and can cause unconsciousness and death if inhaled.

To start the engine:

- The Smart Key must be inside the vehicle.
- **P** or **N** must be selected.
- Apply the brake pedal.
- Press and release the START/STOP button.

Once the engine has started, the brake pedal can be released if it safe to do so.

KEYLESS START BACKUP

If the vehicle has been unlocked using the emergency key blade or the Smart Key is not detected by the vehicle, it will be necessary to use the keyless start backup to disarm the alarm and start the engine.

The keyless start backup can only be used when the message **Smart Key Not Found - Refer to handbook** is displayed in the message center.

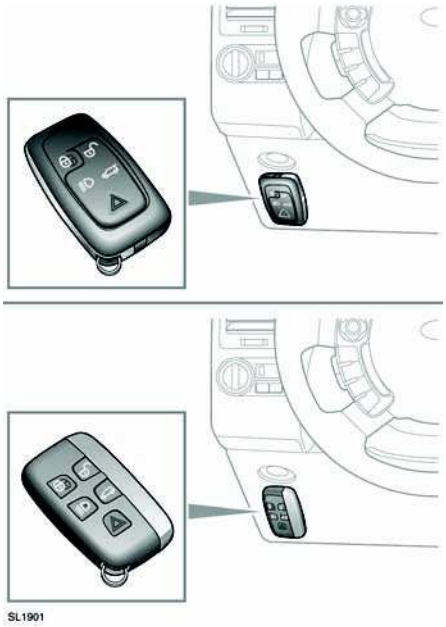

Position the Smart Key against the underside of the fascia with the buttons facing downwards.

When the Smart Key is positioned in this area, it will be recognized by the vehicle and the message **Smart Key Recognized** will be displayed in the message center.

Holding the Smart Key in position and with the brake pedal depressed, press and release the START/STOP button to start the engine.

When the engine starts, you no longer need to hold the Smart Key beneath the fascia.

Note: *If the Smart Key is not recognized or the engine still fails to start, consult your Retailer.*

IF THE ENGINE FAILS TO START

Note: *If the engine fails to crank when the START/STOP button is pressed and there has been a recent collision, the fuel system inertia switch may have been tripped. Seek qualified assistance.*

If the engine persistently fails to start, make sure the transmission is in **P** or **N** and press the START/STOP button (without applying the brake pedal) to switch on the ignition. Slowly depress the accelerator pedal fully, then hold it in the fully down position and press the START/STOP button with the brake pedal applied. The engine will then begin to crank. Release the accelerator pedal when the engine starts.

If the engine fails to crank, or fails to start, consult your Retailer.

Power assisted steering:
If the engine fails to start, there will be no power assisted steering.

SWITCHING OFF THE ENGINE

Before stopping the engine, ensure that the vehicle is parked safely with the parking brake applied and **P** selected.

Press and release the engine START/STOP button to stop the engine. The audio, telephone and touch screen systems will revert to stand-by mode.

Pressing the START/STOP button again (without pressing the brake pedal), will activate the systems.

Switching off the engine while the vehicle is moving:

NOTICE

It is not advisable to switch off the engine while the vehicle is moving. However, if an emergency situation arises where engine switch off is required urgently, the following

procedure applies:

- Press and hold the START/STOP button for 2 seconds, or
- Press and release the START/STOP button twice within 2 seconds.

  With either method, the warning message **Engine Stop Button Pressed** will be displayed.

ROLLING RESTART

A rolling restart can be initiated by selecting **N** (neutral) and pressing the engine START/STOP button.

EMISSION CONTROL SYSTEM

⚠ DANGER

Exhaust fumes contain poisonous substances which can cause unconsciousness and may even be fatal.

- Do not inhale exhaust gases.
- Do not start or leave the engine running in an enclosed unventilated area.
- Do not drive the vehicle with the tailgate open.
- Do not modify the exhaust system.
- Exhaust leaks should be repaired immediately.
- If exhaust fumes are thought to be entering the vehicle, have it investigated immediately.

Land Rover vehicles are fitted with emission and evaporative control systems. In many countries it is unlawful to tamper, modify or replace such equipment and legal penalties apply if the laws are flouted.

Land Rover Retailers are properly equipped to perform repairs and to maintain these systems.

Note: *Running out of gas can result in a misfire. This can cause damage to the emission control system.*

AUTOMATIC TRANSMISSION

The gear selector lever operates in a forward, back and sideways direction.

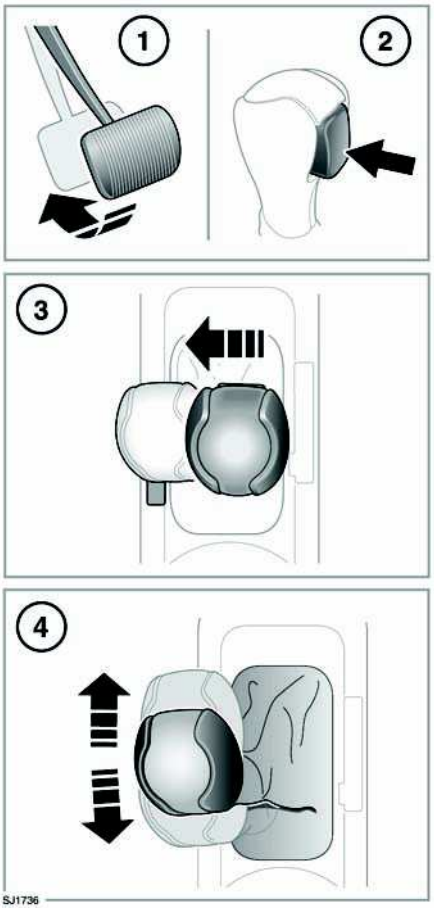

1. To select Drive (**D**) when the vehicle is stationary and engine is running, first apply the foot brake.
2. Press in the release button and move the lever to **D**.

   Note: *If pressure is applied to the selector before the foot brake is applied, the selected gear may not be available. In this situation, remove pressure from the selector, ensure that the foot brake is applied and select the required gear as described.*
3. To select sport mode, move the lever to the left.

   S will appear in the instrument panel and the LED by the selector will illuminate.
4. CommandShift™ can be used when **S** is selected.

   Move the lever forward to move up a gear and back to move down gear. To return to the fully automatic sport mode, move the lever to **D** then back to **S**.
5. To return to drive mode move the selector back to the **D** position.

NOTICE

Do not allow the vehicle to remain stationary for a sustained period, with a gear selected and the engine running.

NOTICE

This vehicle must not be push or tow started.

REVERSE GEAR

NOTICE

*Never select Reverse (**R**) when the vehicle is in forward motion.*

Before selecting reverse gear, ensure the vehicle is stationary and the brakes are applied.

Press in the release button and move the lever to **R**.

NEUTRAL

Disconnects drive to the wheels. Use the parking brake while **N** is selected.

DRIVE

NOTICE

Never select a forward gear when the vehicle is in rearward motion.

Gear changing is fully automatic. Shift points are determined by accelerator pedal position and current road speed.

SPORT MODE

The transmission will stay in the lower gears for longer, improving mid-range performance. To deselect Sport mode, move the selector back to **D**.

PARK

Use when the vehicle is parked. The transmission will be locked.

⚠WARNING

Park (P) should be engaged and the parking brake applied when the vehicle is stationary. The vehicle can move unexpectedly with any other gear position selected, which may result in death or serious injury.

⚠WARNING

Before exiting the vehicle, always ensure that the gear selector is in the Park (P) position, the engine is turned off, the parking brake is applied and the Smart Key is removed from the vehicle.

NOTICE

*Never select Park (**P**) when the vehicle is in motion. Doing so may cause serious damage to the transmission.*

COMMANDSHIFT™

If CommandShift™ is selected in high range, 1st gear must be used for moving off from stationary. In low range, gears 1, 2 or 3 may be used. This may prove useful in certain off-road driving conditions.

To return to Sport mode after CommandShift has been selected, move the selector back to **D** then back to Sport mode.

The message, **COMMANDSHIFT SELECTED** will appear in the message center when the transmission is in CommandShift mode.

Note: *In order to protect the engine, the transmission will automatically change up to prevent over-revving, or down if the engine is labouring.*

Note: *During sustained braking, if a downshift is made that would result in over-revving the engine, the downshift will be delayed until vehicle speed has reduced sufficiently.*

KICK-DOWN

Push the accelerator pedal fully down to achieve rapid acceleration in automatic mode. When the pedal is relaxed, normal gear changing will resume.

TRANSMISSION FAULT

In the event that the transmission develops a fault, a warning message may be displayed in the message center and only limited gears may become available. You should seek qualified assistance immediately.

HIGH/LOW RANGE CHANGING

The transmission switch allows selection of high or low range gears.

NOTICE

Do not use auxiliary equipment, such as roller generators that are driven by only one or two wheels of the vehicle, as they will cause failure of the transmission.



1. High range.

   Hi should be used for all normal road driving and also for off-road driving across dry, level terrain.

2. Low range.

   Lo should only be used in situations where low speed maneuvring is necessary.

   Also use **Lo** for more extreme off-road conditions. Do not attempt to use **Lo** for normal road driving.

With the vehicle stationary and the engine running, select **N**.

With the transmission switch, select the range required and release. The switch returns to the default position and range change status will be confirmed after several seconds.

RANGE CHANGE INDICATORS

In high range, the **Hi** range switch indicator is illuminated.



In low range, the green warning lamp in the instrument pack and the **Lo** range switch indicator are illuminated.

While a range change is in progress, the range indicators will flash as follows:

Hi to Lo change:

- The **Hi** indicator will be illuminated. The **Lo** range lamp and indicator flash during the change and then illuminate constantly.
- The **Hi** range indicator extinguishes when the change is complete.
- The message **LOW RANGE SELECTED** is briefly displayed in the message center.

Lo to Hi change:

- The **Lo** range indicator will be illuminated.The **Hi** range indicator will flash during the change.
- The **Hi** range lamp illuminates constantly when the change is complete.
- The **Lo** range indicator and lamp extinguish when the change is complete.
- The message **HIGH RANGE SELECTED** is briefly displayed in the message center.

RANGE CHANGING ON THE MOVE

The recommended method of changing range is with the vehicle stationary. For experienced off-road drivers, a range change on-the-move can be accomplished, as detailed below.

Hi to Lo change:

3. With the vehicle slowing down and travelling between 24mph (40km/h) and 2mph (3km/h), select **N**.
4. Press transmission switch (**2**) and release it.
5. Wait for the range change to be completed (this may take several seconds). Once complete, select **D** or **S**.

CHANGING FROM LOW TO HIGH RANGE

With the vehicle travelling no faster than 38mph (60km/h), select **N**. Press the transmission switch (**1**) and release it.

Indication of the range change status is the same as for the stationary method.

Now select **D** or **S**.

DYNAMIC STABILITY CONTROL (DSC)

DSC is automatically enabled each time the engine is started and is automatically enabled by some of the Terrain Response special programs.

DSC WARNING LAMP



The DSC warning lamp in the instrument panel illuminates briefly when the ignition is turned on.

If the warning lamp flashes rapidly during driving, the system is active.

A fault with the DSC or ETC systems is indicated by the warning lamp illuminating and an associated warning message. The vehicle can still be driven, but without DSC or ETC assistance. Seek qualified assistance as soon as possible.

DISABLING DSC

⚠WARNING

Disabling the DSC may adversely affect vehicle stability and braking which in turn can lead to loss of control and increased braking distance, resulting in a rollover or crash.

In some driving conditions it may be appropriate to disable DSC to improve traction. These conditions include:

- Rocking the vehicle out of a hollow or out of a soft surface.
- Pulling away in deep snow, or a loose surface.
- Driving through deep sand or mud.
- Driving along tracks with deep longitudinal ruts.



To disable DSC, press and briefly hold the DSC OFF switch (the DSC OFF warning lamp will illuminate continuously). Deactivating DSC also reduces the level of traction control intervention and may lead to an increase in wheel spin.

RE-ENABLING DSC

DSC is re-enabled by one of the following:

- Press and briefly hold the DSC OFF switch.
- Stop and start the engine.
- Select a new Terrain Response special program.

ROLL STABILITY CONTROL (RSC)

⚠WARNING

No electronic system can remove the need for safe driving practice. RSC can help to maintain control of the vehicle. It cannot regain control of the vehicle if it has been lost, or overcome driver errors. Always drive with due consideration for the prevailing road and weather conditions.

RSC is an automatic feature that works in conjunction with DSC to tray and prevent vehicle rollover.

ELECTRONIC TRACTION CONTROL (ETC)

ETC operates in conjunction with Dynamic Stability Control (DSC) and is designed to assist when one or more wheels have lost traction.

If a wheel loses traction, ETC will operate the brake on that wheel until it regains traction. The warning indicator will flash to inform the driver that ETC is operating.

Note: *When DSC is deactivated, ETC operation is restricted to wheel braking. ETC will no longer affect engine torque output.*

TRAILER STABILITY ASSIST

When the trailer electrical socket is in use and the vehicle is pulling a trailer, trailer stability assist monitors vehicle motion above 37mph (60km/h). If undesirable motion is detected, engine and braking management systems will operate to stabilise the vehicle and trailer.

Note: *Trailer stability assist will not operate while DSC is switched off.*

AUTOMATIC SYSTEMS

ETC will automatically enable settings to operate in conjunction with certain selected Terrain Response programs. Sand Launch and Rock Crawl Precharge are just two examples. Sand Launch will control wheel spin in soft ground even if full throttle is applied, allowing a gradual and controlled pull away. Rock Crawl Precharge applies a minimal amount of brake pressure while traversing obstacles at very low speed. This improves vehicle response when a wheel is cresting an obstacle.

These settings are implemented without being overtly apparent.

ADAPTIVE DYNAMICS

Ride comfort and control is optimised by the Adaptive Dynamics system. It adjusts vehicle settings based on inputs from both the road and driver.

If a fault is detected, **ADAPTIVE DYNAMICS FAULT** will be displayed in the message center, accompanied by a warning triangle. If the message is displayed several times, have it checked by your Land Rover Retailer.

AIR SUSPENSION SYSTEM

⚠WARNING

Ensure that the vehicle is clear of people and obstacles before lowering the suspension. The difference between Off-road height and Access height is 3.7in (95mm).

The air suspension system may be used to raise or lower the height of the vehicle, using the air suspension control switch.

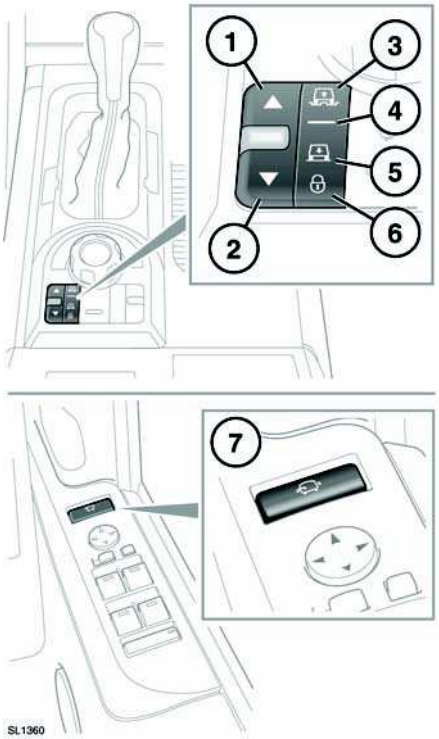

1. Raise switch. The arrow will illuminate when a height change is in progress.
2. Lower switch. The arrow will illuminate when a height change is in progress.
3. Off-road height indicator. Off-road height is 2.2in (55mm) higher than normal height.
4. Normal height indicator.
5. Access height indicator. Access height is 1.6in (40mm) lower than normal height.
6. System lock indicator.
7. Driver's door panel switch. Access height can be selected directly with a single press.

Note: *The system may raise or lower the vehicle automatically (e.g. if a Terrain Response program requires it, or if the vehicle is travelling at high speed).*

Changes to the height of the vehicle must be made when all doors are closed and the engine is running. Remote operation does not require the engine to be running. See **REMOTE OPERATION** (page 95). If a door is opened during a height change, the height change will be suspended. If the door is closed within 90 seconds, the height change will then complete. if the doors are not closed in time, the desired height should be reselected once the doors are closed. Driving off will return the vehicle to normal height.

Note: *If the air suspension is used many times in succession, the speed of operation may slow.*

SELECTING OFF-ROAD HEIGHT

Press the raise switch **1** at any speed up to 24mph (40km/h). If vehicle speed exceeds 30mph (50km/h), a warning will appear in the message center and the system will return to normal height.

EXTENDED OFF-ROAD HEIGHT

If grounded in severe off-road conditions, the system may automatically enter Extended mode. The off-road height indicator flashes and a message will be displayed in the message center. In extended mode, the suspension will raise above off-road height to assist in clearing the obstacle.

Once extended mode height has been achieved, the driver may request additional lifting if required. This is achieved by pressing and holding the raise switch for longer than 3 seconds while pressing the brake pedal.

To cancel extended mode, press the lower switch **2**.

Extended mode will automatically be cancelled if the vehicle speed remains greater than 3mph (5km/h) for 30 seconds.

Note: *Extended mode cannot be selected manually.*

SELECTING ACCESS HEIGHT

To select access height from normal height, press the lower switch **2**. To select access height from Off-road height, press the switch once, then a second time while lowering is in progress. **ACCESS HEIGHT SELECTED** will be displayed in the message center.

If the vehicle speed is greater than 12mph (20km/h), the system will wait for the speed to decrease. If it does not fall below this speed within 1 minute, the height change will be cancelled.

Once the speed falls below 12mph (20km/h) the vehicle will be partly lowered. When the speed falls below 5mph (8km/h) within 1 minute, full access height will be reached.

Note: *Access height may be selected up to 40 seconds after the ignition is switched off, provided the driver's door has not been opened.*

When vehicle speed rises above 5mph (8km/h) for five seconds, the vehicle will return to the height access height was selected from.

CRAWL MODE (LOCKED ACCESS HEIGHT)

When the vehicle is at Normal height and travelling less than 22mph (35km/h), or at Access height, press the lower switch for longer than 3 seconds to lock the vehicle at access height. The system lock indicator **6** will illuminate and **SUSPENSION LOCKED AT ACCESS HEIGHT** will be displayed in the message center.

The vehicle may then be driven slowly at access height, to assist with maneuvring in confined areas (e.g. multi-storey car parks).

To cancel crawl mode, press the raise switch for longer than 1 second. The system lock indicator will extinguish and if the vehicle is travelling faster than 6mph (10km/h) it will return to normal height.

Crawl mode will be cancelled automatically if the vehicle speed exceeds 24 mph (40 km/h).

REMOTE OPERATION

⚠WARNING

The Smart Key can be operated from inside or outside the vehicle. It is therefore important that it is kept out of the reach of children at all times.

⚠WARNING

When operating the Smart Key from inside the vehicle, make sure that an adult checks for obstructions under the vehicle and supervises the raising or lowering process.

NOTICE

Care should be taken with all height changes when a trailer is attached to the vehicle.

The buttons on the Smart Key may be used to operate the air suspension system, allowing the vehicle to be raised or lowered remotely. This may be useful in attaching a trailer or loading the vehicle.

To change the suspension height using the Smart Key, the vehicle must be stationary, all the doors closed and the hazard warning lamps switched on.

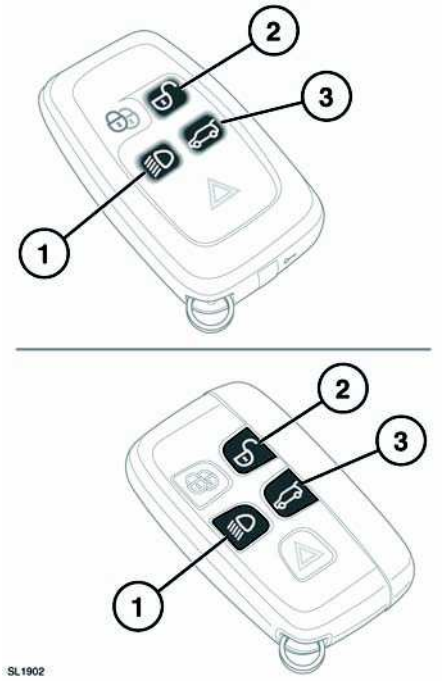

To raise the vehicle, press and hold buttons **1** and **2** simultaneously

To lower the vehicle, press and hold buttons **1** and **3** simultaneously.

If the starting height is above or below normal height, movement will cease when normal height is reached. Release the Smart Key buttons and press again to continue.

FOOT BRAKE

⚠WARNING

Do not rest your foot on the brake pedal while the vehicle is in motion.

⚠WARNING

Never allow the vehicle to coast (freewheel) with the engine turned off. The engine must be running to provide full braking assistance. The brakes will still function with the engine off, but far more pressure will be required to operate them.

⚠WARNING

If the red brake warning lamp illuminates, safely bring the vehicle to a stop, as quickly as possible and seek qualified assistance.

⚠WARNING

Never place non-approved floor matting or any other obstructions under the brake pedal. This restricts pedal travel and braking efficiency and may cause a crash.

Driving through heavy rain or water can have an adverse effect on braking efficiency. Under such circumstances, it is recommended that you lightly apply the brakes intermittently, to dry the brakes.

⚠WARNING

Do not pump the brake pedal at any time; this will interrupt operation of the system and may increase stopping distances.

ABS WARNING LAMP



The ABS warning lamp illuminates briefly when the ignition is turned on.

If this amber warning lamp illuminates when driving (accompanied by an associated warning message), drive with extra caution, avoid heavy braking and seek qualified assistance as soon as possible.

⚠WARNING

ABS cannot overcome the physical limitations of stopping the vehicle in too short a distance, cornering at too high a speed or the danger of aquaplaning.

Do not take risks that could affect the safety of yourself, your passengers and any other road users. It is the driver's responsibility to drive within normal safety margins, giving due consideration to prevailing weather and traffic conditions.

STEEP SLOPES

If the vehicle is stationary on a steep, slippery slope, it may begin to slide even with the brakes applied. This is because without wheel rotation, the ABS cannot determine vehicle movement.

To counteract this, briefly release the brakes to allow some wheel rotation. Then re-apply the brakes to allow ABS to gain control.

EMERGENCY BRAKE ASSIST (EBA)

If the driver rapidly applies the brakes rapidly, EBA automatically boosts the braking force to its maximum, in order to bring the vehicle to a halt as quickly as possible. If the driver applies the brakes slowly, but conditions mean that ABS operates on the front wheels, EBA will increase the braking force in order to apply ABS control to the rear wheels.

EBA stops operating as soon as the brake pedal is released.

BRAKE USA only. This amber brake warning lamp illuminates briefly when the ignition is turned on.

Canada and Mexico only. This amber brake warning lamp illuminates briefly when the ignition is turned on.

A fault with the EBA system is indicated by the brake warning lamp illuminating amber and an associated warning message. The vehicle can still be driven with care, but avoid heavy brake application.

Seek qualified assistance urgently.

ELECTRONIC BRAKE DISTRIBUTION (EBD)

EBD controls the balance of braking forces supplied to the front and rear wheels, in order to maintain maximum braking efficiency.

If the vehicle has a light load (only the driver in the vehicle for example), EBD will reduce the braking force applied to the rear wheels. If the vehicle is heavily laden, EBD will allow greater braking force to the rear wheels.

BRAKE USA only. A fault with the EBD system is indicated by the red brake warning lamp illuminating and an associated warning message.

Canada and Mexico only. A fault with the EBD system is indicated by the red brake warning lamp illuminating and an associated warning message. See **WARNING LAMPS** (page 65).

ELECTRIC PARKING BRAKE (EPB)

⚠WARNING

Do not rely on the parking brake to hold the vehicle stationary if the brake warning lamp is illuminated or the EPB warning lamp is flashing. Seek qualified assistance urgently.

NOTICE

The parking brakes operates on the rear wheels. Therefore, secure parking of the vehicle is dependent on being on a hard and stable surface.

NOTICE

Do not rely on the parking brake to operate effectively, if the rear wheels have been immersed in mud or water.

***Note:** If the vehicle is used in severe off-road conditions (e.g. wading, deep mud, etc.), additional maintenance and adjustment of the parking brake will be required. Consult your Land Rover Retailer/Authorized Repairer.*

APPLYING THE EPB MANUALLY

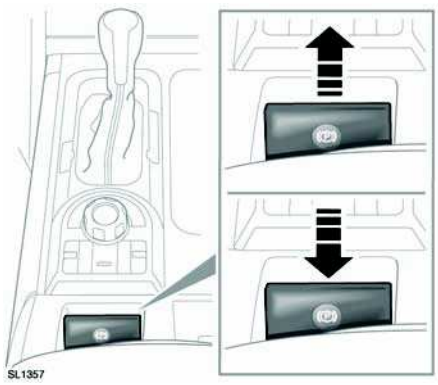

With the vehicle stationary, pull up the lever (arrowed) and release it.



USA only. This red parking brake warning lamp will illuminate.

Canada and Mexico only. This red parking brake warning lamp will illuminate.

Continuous red illumination indicates the brake has been correctly applied.

If the lever is operated when the vehicle speed is less than 2mph (3km/h) the vehicle will be brought to an abrupt stop. The stop lamps will not be illuminated.

If a fault is detected the warning lamp will flash red or illuminate yellow continuously and a **PARKBRAKE** message will be displayed in the message center.

Note: *The red brake warning indicator will continue to be illuminated for at least ten seconds after the ignition has been turned off.*

APPLYING THE EPB AUTOMATICALLY

EPB will be applied automatically if the ignition is switched off and the vehicle speed is below 2mph (3km/h).

To prevent automatic operation, when the vehicle is stationary, press and hold the EPB switch in the release position. Within 5 seconds, switch off the ignition and continue to hold the EPB switch for a further 2 seconds.

DYNAMIC OPERATION

NOTICE

Driving the vehicle with the parking brake applied, or repeated use of the parking brake to slow the vehicle, may cause serious damage to the brake system.

In an emergency, with the vehicle travelling more than 2mph (3km/h), pulling on the EPB lever and holding gives a gradual reduction in the speed. The brake warning indicator will illuminate accompanied by a warning tone and a **PARKBRAKE** message will be displayed in the message center. The stop lamps will illuminate.

RELEASING THE EPB MANUALLY

With the ignition turned on, press the brake pedal and press down on the EPB lever. This will release the electronic parking brake.

RELEASING THE EPB AUTOMATICALLY

If the vehicle is stationary with the EPB applied and the transmission in **D** or **R**, pressing the accelerator will release the EPB and allow the vehicle to move off.

With the transmission in CommandShift™ mode, automatic release is available in 1st and 2nd gears in High range and 1st, 2nd and 3rd in gears Low range.

Note: *Automatic release of the EPB is possible only when the driver's door is closed or the driver's seat belt is buckled.*

To delay automatic release, hold the EPB lever in the applied position and release at the desired point.

The parking brake system gradually reduces the system load to assist a smooth drive away. If the reduction in system load causes the vehicle to move after a valid gear is selected, full load will be automatically re-applied to the parking brake.

To override the load reducing feature of the EPB, manually apply the parking brake after selecting a gear.

In the event of a failure, a **PARKBRAKE** message will be displayed in the message center.

At the start of a journey, EPB release times may be extended when changing from **P** or **N**. This is to allow for increased gear engagement times.

TIRE PRESSURE MONITORING SYSTEM (TPMS)

⚠WARNING

TPMS provides a low pressure warning and does not re-inflate your tires. Tire pressures should be checked regularly using an accurate pressure gauge when cold.

⚠WARNING

TPMS can NOT register damage to a tire. Regularly check the condition of your tires, especially if the vehicle is driven off-road.

NOTICE

When inflating tires, care should be taken to avoid bending or damaging the TPMS valve. Always ensure correct alignment of the inflation head to the valve stem.

Note: *Non-approved accessories may interfere with the system. If this occurs,* ***TIRE PRESSURE MONITORING FAULT*** *is displayed in the message center.*

Note: *Different types of tire may affect the performance of the TPMS. Always replace tires in accordance with recommendations.*

Your vehicle is equipped with a TPMS which monitors pressure in each tire, including the full-size spare tire. Compact spare tires are not fitted with sensors and are consequently not monitored.

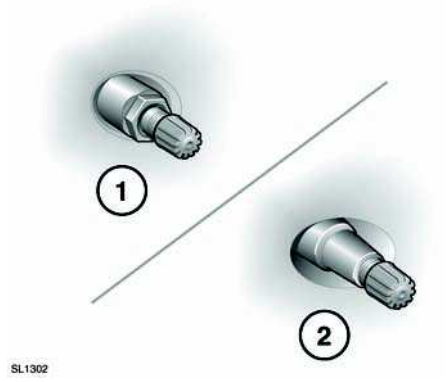

Wheels fitted with TPMS can be visually identified by the external metal lock nut and valve (**1**). All Land Rover non-TPMS wheels have a rubber valve fitted (**2**).

TPMS OPERATION

The TPMS monitors the pressure of the tires via sensors located in each wheel and a receiver located within the vehicle. Communication between sensor and receiver is via Radio Frequency (RF) signals.



The tire pressure warning comprises a yellow warning telltale within the instrument panel and the associated messages within the message center.

Each tire, including the spare (if provided) should be checked monthly when cold and inflated to the inflation pressure recommended by the vehicle manufacturer on the vehicle placard or tire inflation pressure label. (If your vehicle has tires of a different size than the size indicated on the vehicle placard or tire inflation pressure label, you should determine the proper tire inflation pressure for those tires.)

As an added safety feature, your vehicle has been equipped with a tire pressure monitoring system (TPMS) that illuminates a low tire pressure telltale when one or more of your tires is significantly under-inflated.

Accordingly, when the low tire pressure telltale illuminates, you should stop and check your tires as soon as possible and inflate them to the proper pressure. Driving on a significantly under-inflated tire causes the tire to overheat and can lead to tire failure. Under-inflation also reduces fuel efficiency and tire tread life, and may affect the vehicle's handling and stopping ability.

Please note that the TPMS is not a substitute for proper tire maintenance and it is the driver's responsibility to maintain correct tire pressure, even if under-inflation has not reached the level to trigger illumination of the TPMS low tire pressure telltale.

The TPMS may issue a warning if the under-inflation becomes significant. When driving through variable climatic conditions, the TPMS warnings may be intermittent.

Your vehicle has also been equipped with a TPMS malfunction indicator to indicate when the system is not operating properly.

The TPMS malfunction indicator is combined with the low tire pressure telltale. When the system detects a malfunction, the telltale will flash for approximately one minute and then remain continuously illuminated. This sequence will continue upon subsequent vehicle start-ups as long as the malfunction exists.

When the malfunction indicator is illuminated, the system may not be able to detect or signal low tire pressure as intended. TPMS malfunctions may occur for a variety of reasons, including the installation of replacement or alternate tires or wheels on the vehicle that prevent the TPMS from functioning properly. Always check the TPMS malfunction telltale after replacing one or more tires or wheels on your vehicle to ensure that the replacement or alternate tires and wheels allow the TPMS to continue to function properly.

A supplementary text message will accompany the system indicator and will display **TIRE PRESSURE MONITORING FAULT**.

TPMS - FULL SIZE SPARE AND TIRE CHANGE

The system will automatically recognize any changes in wheel positions. The vehicle must be stationary for 15 minutes during the wheel and tire change, to ensure that the system can detect the change. After driving above 18mph (25km/h), any deflation warning should clear within approximately 5 minutes.

Always have your tires serviced or changed by a qualified technician.

Care must be taken to avoid contact between the bead of the tire and the sensor during removal and refitting of the tire, otherwise the sensor may become damaged and/or inoperable.

NOTICE

Valve stem seal, washer, nut, valve core and cap should be replaced at every tire change. Valve stem seal, washer and nut must be replaced if valve retention nut is loosened. Sensor units and nuts must be refitted using correct torque figures and associated profile. Damage to the vehicle may result if these precautions are not taken.

REPLACEMENT SENSOR

Should the sensor require replacing, it should be carried out by a Retailer.

A replacement sensor must be fitted to a running wheel in order to be recognized by the TPMS. Recognition only occurs when the vehicle is driven above 18mph (25km/h) for approximately 10 minutes.

Should the TPMS warning for any wheel not clear, even after ensuring correct inflation and driving for more than 10 minutes above 18mph (25km/h), consult your Retailer.

TPMS TYPE APPROVAL

USA

This device complies with part 15 of the FCC Rules. Operation is subject to the following two conditions:

- This device may not cause harmful interference, and
- this device must accept any interference received, including interference that may cause undesired operation.

Canada

IC-RSS-210:
Operation is subject to the following two conditions:

- This device may not cause interference, and
- this device must accept any interference, including interference that may cause undesired operation of the device.

The TPMS radio frequency approval numbers for the USA and Canada are:

USA FCC ID:	KR5S120123
	KR5S180021
	5WK49097
Canada IC:	267T-S120123
	267T-S180021
	267T-5WK49097

Note: *Changes or modifications not expressly approved by the manufacturer could void the user's authority to use the equipment.*

USING THE PARKING AID

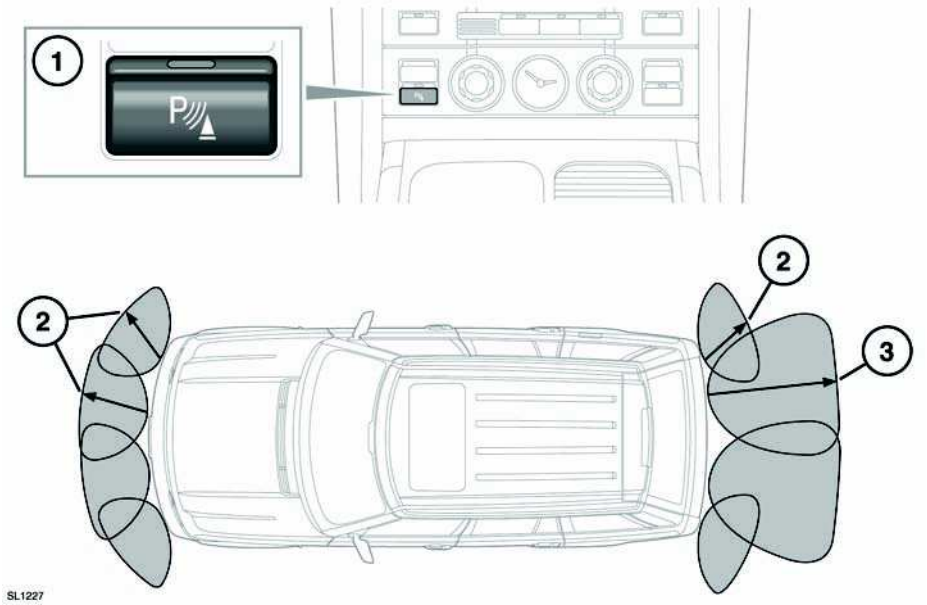

⚠WARNING

Parking aids may not detect moving objects, such as children and animals, until they are dangerously close. Always use extreme caution when maneuvering, turn and look and use your mirrors.

NOTICE

Park Distance Control (PDC) sensors may not detect some obstructions (e.g. narrow posts, small objects close to the ground and some objects with non-reflective surfaces). Parking aids are for guidance only and are not intended to replace the driver's visual checks for obstructions or objects when maneuvering

1. When reverse gear is selected, the front and rear parking sensors are activated automatically. The switch indicator will illuminate.

   To manually activate the front sensors press button **1**. A short confirmation tone will be heard and the switch indicator will illuminate.

   To turn off the system when active, press button **1**. The switch indicator will extinguish.

2. The range of the parking aid sensors varies between the front, rear and corners of the vehicle. The front sensors and rear corner sensors have an approximate range of 24in (600 mm).
3. The two center rear sensors have an approximate range of 60in (1500mm).

The front sensors will remain active as long as the vehicle's speed does not exceed 10mph (16km/h).

In vehicles fitted with automatic transmission, selecting **N** from **R** will keep front and rear sensors active.

When objects are detected, the parking aid emits a warning tone which increases in frequency as the vehicle gets closer to the object and then becomes constant when the obstacle is within 12in (300 mm).

Note: *The front parking aid provides an audible proximity warning when driving forwards and when reversing.*

TOWING

The rear sensors are automatically disabled when a trailer is connected, therefore the parking aid cannot be used when reversing a trailer.

SENSOR CARE

NOTICE

When washing the vehicle do not aim high pressure water jets directly at the sensors. Do not use abrasive materials or hard/sharp objects to clean the sensors. Only use approved vehicle shampoo.

The sensors should be kept clean to maintain accuracy and performance.

SYSTEM FAULT

If a system fault is detected, a long high-pitched tone will sound and the switch indicator will flash. Contact your Retailer as soon as possible.

USING CRUISE CONTROL

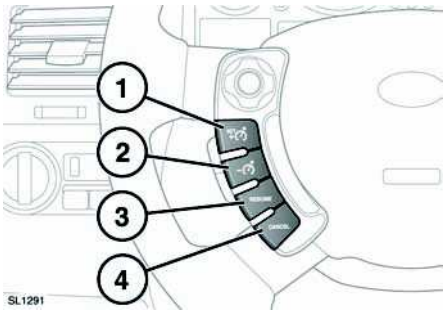

1. Set target speed, or increase speed.
2. Decrease set speed.
3. Resume set speed.
4. Suspends cruise control operation without erasing memorized speed.

Note: *Cruise control is not available when using Hill Descent Control, when a Terrain Response special program has been selected or when Low range is in use.*

Note: *Do not use cruise control when driving off-road.*

Note: *Do not use cruise control with* ***SPORT*** *mode selected.*

SET OR INCREASE CRUISE SPEED

⚠WARNING

The driver must always ensure that a safe speed is maintained within the speed limit, taking account of traffic and road conditions.

Do not use cruise control in heavy traffic or conditions where a constant road speed cannot be safely maintained, such as on roads that are winding, wet with rain or snow, slippery or unpaved.

Note: *When setting the cruise control to the speed limit, it is important to remember that it is possible for the vehicle speed to increase when travelling downhill. This may result in the vehicle speed exceeding the speed limit.*

Note: *Cruise control can be engaged only at speeds in excess of 20mph (32km/h).*

Accelerate until the desired speed is reached, then press control **1**. This sets the vehicle speed into the system's memory. Cruise control will now maintain that speed.



The cruise control warning lamp will illuminate to confirm cruise control is operational.

Speed can still be increased using the accelerator pedal. As soon as the accelerator pedal is released, the vehicle speed will return to the set cruising speed.

Note: *If the accelerator pedal is pressed for more than 5 minutes, cruise control will be cancelled.*

To increase the set cruise speed, press and hold control **1**. Release the switch when the desired speed is reached, the new speed will be set and maintained.

The speed can be increased in steps of 1mph (2km/h), by briefly pressing control **1**.

Speed can also be increased using the accelerator. When the desired speed is reached press control **1** to set and maintain the new speed.

DECREASING CRUISE SPEED

To reduce cruising speed, press and hold control **2**. Release the switch when the desired speed is reached, the new speed will be set and maintained.

The set speed can be decreased in steps of 1mph (2km/h), by briefly pressing control **2**.

RESUMING AND SUSPENDING CRUISE CONTROL

To resume cruise control at the previous set speed, press control **3**.

Suspend with a single press of control **4**.

Cruise control will also be suspended if the brake pedal is pressed or the gear selector is moved to **N**.

Note: *The set speed can be erased only by switching off the ignition.*

PRINCIPLE OF OPERATION

The Adaptive Cruise Control (ACC) system is designed to aid the driver to maintain a gap to the vehicle ahead or a set road speed if there is no slower vehicle ahead.

⚠WARNING

ACC is not a collision warning or avoidance system. Additionally, ACC will not react to:

- **Stationary or slow moving vehicles below 6 mph (10 km/h).**
- **Pedestrians or objects in the road.**
- **Oncoming vehicles in the same lane.**

NOTICE

Only use ACC when conditions are favorable (i.e. main roads with free flowing traffic).

NOTICE

Do not use in poor visibility, specifically fog, heavy rain, spray or snow.

NOTICE

Do not use on icy or slippery roads.

NOTICE

It is the drivers responsibility to stay alert, drive safely and be in control of the vehicle at all times.

The ACC system uses a radar sensor, which projects a beam directly forward of the vehicle to detect objects ahead.

The radar sensor is mounted behind the lower grille, to provide a clear view forward for the radar beam.

Note: *Keep the front of the vehicle free from dirt, metal badges or objects, including vehicle front protectors, which may prevent the sensor from operating.*

USING ACC

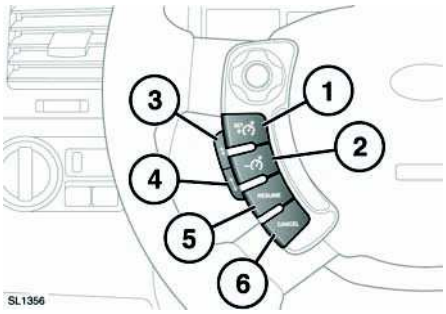

1. Set target speed, or increase speed.
2. Decrease set speed.
3. Press to decrease the gap.
4. Press to increase the gap.
5. Resume set speed.
6. Suspends cruise control operation without erasing memorized speed.

The system is operated by controls mounted on the steering wheel. The driver can also intervene at any time by use of the brake or accelerator pedal.

Setting the vehicle speed, activating and deactivating ACC, is done in the same way as when using cruise control.

FOLLOW MODE

⚠WARNING

When in follow mode, the vehicle will not decelerate automatically to a stop, nor will the vehicle always decelerate quickly enough to avoid a collision without driver intervention.

Note: *Follow mode is an integral function of ACC. You cannot disengage follow mode and still use cruise control to maintain your speed.*

Once a set speed has been selected, the driver can release the accelerator and the set road speed will be maintained.

When a vehicle ahead enters the same lane or a slower vehicle is ahead in the same lane, the vehicle speed will be adjusted automatically until the gap to the vehicle ahead corresponds to the default gap setting (gap level 3). The vehicle is now in **follow mode**.



The amber warning lamp in the instrument panel will be illuminated.

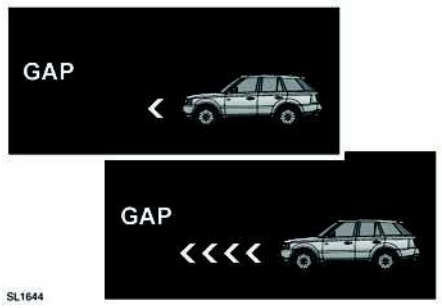

The message center will display the gap set.

The vehicle will then maintain the constant time gap to the vehicle ahead until:

- The vehicle ahead accelerates to a speed above the set speed.
- The vehicle ahead moves out of lane or out of view.
- The vehicle ahead slows so that low speed automatic switch off occurs.
- A new gap distance is set.

If necessary, the vehicle brakes will be automatically applied to slow the vehicle to maintain the gap to the vehicle ahead.

The maximum braking which is applied by the ACC system is limited and can be overridden by the driver applying the brakes, if required.

Note: *Driver braking will cancel ACC.*

If the ACC system predicts that its maximum braking level will not be sufficient, then an audible warning will sound while the ACC continues to brake. **DRIVER INTERVENE** will be displayed on the message center. The driver should take immediate action.

When in follow mode, the vehicle will automatically return to the set speed when the road ahead is clear, for instance when:

- The vehicle in front accelerates or changes lane.
- The driver changes lane to either side or enters an exit lane.

The driver should intervene if appropriate.

CHANGING THE FOLLOW MODE GAP

Four gap settings are available. The selected gap setting is displayed on the message center when the gap adjustment buttons are operated.

Each gap level is indicated by an additional chevron in front of the vehicle icon in the message center. After the ignition is switched on, the default gap (gap level 3) will be automatically selected ready for ACC operation.

Note: *It is the driver's responsibility to select a gap appropriate to the driving conditions.*

OVERRIDING THE SPEED AND FOLLOW MODE

⚠WARNING

Whenever the driver is overriding the ACC by depressing the accelerator pedal, the ACC will not automatically apply the brakes to maintain separation from any vehicle ahead.

A set speed and gap is overridden when the accelerator pedal is pressed. The warning lamp will extinguish and **CRUISE OVERRIDE** will be displayed on the message center. When the

accelerator is released the ACC function will operate again and vehicle speed will decrease to the set speed, or a lower speed if follow mode is active.

AUTOMATIC LOW SPEED SWITCH OFF

If the speed of the vehicle decreases below 18mph (30 km/h), the ACC system will be automatically switched off and the warning lamp will go out.

If the brakes were being applied by the ACC system, they will be slowly released.

This will be accompanied by an audible warning and **DRIVER INTERVENE** will be displayed on the message center. The driver must take control.

AUTOMATIC SWITCH OFF

ACC will disengage, but not clear the memory when:

- The **CANCEL** button is pressed.
- The brake pedal is pressed.
- Neutral (**N**) is selected.
- Dynamic Stability Control (DSC) activates.
- Electronic Traction Control (ETC) activates.
- Hill Descent Control (HDC) is selected.

ACC will disengage, and clear the memory when:

- The ignition system is switched off
- Maximum vehicle speed is reached
- A fault occurs in the ACC system.

RESUMING THE SPEED AND FOLLOW MODE

NOTICE

RESUME *should only be used if the driver is aware of the set speed and intends to return to it.*

By pressing the **RESUME** button after ACC has been cancelled (e.g. after braking), the ACC will become active again provided that the set speed memory has not been erased. The original set speed will be resumed (unless a vehicle ahead causes the follow mode to become active) and the set speed will be displayed in the message center for 4 seconds.

HINTS ON DRIVING WITH ACC

The system acts by regulating the speed of the vehicle, using engine control and the brakes. Gear changes may occur in response to deceleration or acceleration while in ACC.

ACC is not a collision avoidance system. However, during some situations the system may provide the driver with an indication that intervention is required.

An audible alarm will sound, accompanied by the message **DRIVER INTERVENE** if the ACC detects:

- A failure has occurred while the system is active.
- That using maximum ACC braking only is not sufficient.

Note: *ACC operates when the gear selector lever is in position **D**.*

Note: *When engaged, the accelerator pedal rests in the raised position. Fully release the pedal to allow normal ACC operation.*

Note: *When braking is applied by the ACC, the vehicle brake lamps will be switched on.*

DETECTION BEAM ISSUES

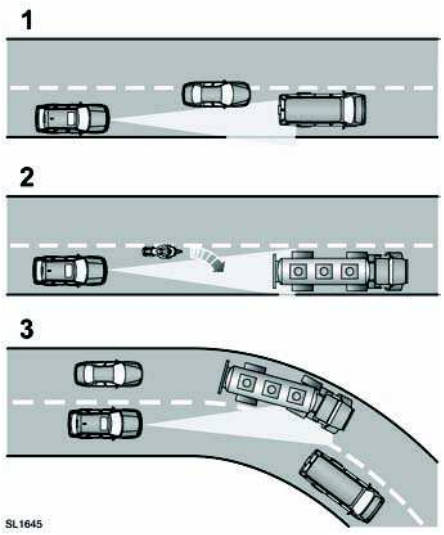

Detection issues can occur:

1. When driving on a different line to the vehicle in front.
2. When a vehicle edges into your lane. The vehicle will only be detected once it has moved fully into your lane.
3. There may be issues with the detection of vehicles in front when going into and coming out of a bend.

In these cases ACC may brake late or unexpectedly. The driver should stay alert and intervene if necessary.

ACC FAILURE

If a fault occurs during operation of the system in cruise or follow modes, the ACC system will switch off and cannot be used until the fault is cleared. The message **DRIVER INTERVENE** appears briefly and is then replaced by the message **CRUISE NOT AVAILABLE**.

If failure of the ACC or any related system occurs at any other time, the message **CRUISE NOT AVAILABLE** will be displayed. It will not be possible to activate the ACC system in any mode.

Accumulations of dirt, snow or ice on the sensor or cover may inhibit ACC operation. Fitting of a vehicle front protector or metallised badges may also affect ACC operation.

If this occurs in ACC cruise /follow mode, the audible alarm sounds and the message **DRIVER INTERVENE** displays briefly. The message **RADAR SENSOR BLOCKED** will then be displayed.

Note: *The same messages may also be displayed while driving on open roads with few objects for the radar to detect.*

Clearing the obstruction allows the system to return to normal operation. If the obstruction is present when ACC is inactive (e.g. on initial starting or with the ACC system switched off), the message **RADAR SENSOR BLOCKED** will be displayed.

Tires other than those recommended for your vehicle, may have different sizes. This can affect the correct operation of the ACC.

FORWARD ALERT

Limited detection and warning of objects ahead, is provided during ACC operation by the ACC **DRIVER INTERVENE** warning. The forward alert feature additionally provides warnings when ACC is not engaged; if a vehicle is detected close ahead, then the warning tone and **FORWARD ALERT** message will be issued. The brakes will not be applied automatically.

The forward alert feature may be switched on or off via the Vehicle Set-up menu.
See **VEHICLE INFORMATION AND SETTINGS MENU** (page 63).



The warning lamp in the instrument panel illuminates when forward alert is switched on.

The sensitivity of the warning can only be adjusted with ACC disengaged. Adjust as follows:

- Press the gap decrease button to display and then decrease the sensitivity of the alert.
- Press the gap increase button to display and then increase the sensitivity of the alert.

FWD ALERT <----> is displayed in the message center.

ADVANCED EMERGENCY BRAKE ASSIST (EBA)

NOTICE

The system may not react to slow moving vehicles and will not react to stationary vehicles or vehicles travelling in the opposite direction.

NOTICE

Warnings may not appear if the distance to the vehicle ahead is very small or if steering wheel or pedal movements are large (e.g. to avoid a collision).

NOTICE

The system utilises the same radar sensor as ACC and Forward alert - the same limitations of performance apply.

Advanced EBA is available at speeds above approximately 5mph (7km/h) and improves braking response during emergency braking, when a moving vehicle is detected close ahead.

If the risk of collision increases after the **FORWARD ALERT** warning is displayed, advanced EBA is activated. The brakes are automatically applied gently in preparation for rapid braking (this may be noticeable). If the brake pedal is then pressed quickly, full braking is implemented, even if only light pressure is applied to the pedal. See **EMERGENCY BRAKE ASSIST (EBA)** (page 96).

Note: *Braking performance will only be improved if the driver applies the brakes.*

Advanced EBA will function even if Forward Alert and ACC are switched off. If there is a fault with the system, **FORWARD ALERT UNAVAILABLE** is displayed in the message center. The vehicle can still be driven and the braking system will still operate, but without advanced EBA. Seek qualified assistance to have the fault rectified.

BEFORE DRIVING OFF-ROAD

Before venturing off-road, it is absolutely essential that inexperienced drivers become fully familiar with the vehicle's controls. In particular, CommandShift™, Hill Descent Control (HDC) and the Terrain Response system.

Basic guidance for Off-Road driving can be found in the Land Rover Off-Road Driving handbook. This is a free download at: **www.ownerinfo.landrover.com**.

TERRAIN RESPONSE OPERATION



Terrain Response selection is via a rotary control. There are five Terrain Response programs marked around the control.

Information relating to the suitability of each selected program on different types of surface, is given on the touch screen, via the **4 x 4 Info** soft key. Touch the terrain response icon, then the information icon. The displayed text is relevant to the currently selected program.

GENERAL PROGRAM (SPECIAL PROGRAMS OFF)



This program is compatible with all on and off-road conditions. If not already active, it should be selected before driving on surfaces which are similar to a hard road surface. Dry cobbles, tarmac, dry wooden planks, etc., all fall into this category.

This program should be selected once the need for a special program has passed. Once the special program has been deselected, all of the vehicle systems will return to their normal settings except HDC. HDC will remain active if it was selected manually.

GRASS-GRAVEL-SNOW



This program should be used where a firm surface is covered with loose or slippery material.

Note: *For deep gravel it is recommended that the Sand program is selected.*

Note: *If the vehicle is unable to gain traction in deep snow, switching DSC off may help. DSC should be switched on again as soon as the difficulty is overcome.*

MUD-RUTS



This program should be used for crossing terrain that is muddy, rutted, soft or uneven.

Low range is recommended for this program and if not selected, the message center will prompt you.

If the Mud-Ruts program and Low range are selected together, the vehicle ride height will be raised automatically.

SAND



This program should be used for terrain which is predominantly soft dry sand or deep gravel.

Note: *If the vehicle is unable to gain traction in extremely soft, dry sand, switching DSC off may help. DSC should be switched on again as soon as the difficulty is overcome.*

If the sand to be crossed is damp/wet, and sufficiently deep to cause the wheels to sink into the surface, the Mud-Ruts program should be used.

ROCK CRAWL



This program should be used for terrain which is predominantly rocky, including for crossing river beds with submerged rocks.

This program provides good low-speed control.

Rock crawl can only be selected in Low range. If the selection is made while in High range, the message center will prompt you to select Low range.

NOTICE

Use of an incorrect program will impair the vehicle's response to the terrain and can reduce the life of the suspension and drive systems.

WADING

The maximum advisable wading depth is 27.6in (700mm). If the vehicle remains stationary in water above the door sill level, severe electrical damage may occur.

NOTICE

Do not switch off the engine when wading and avoid stopping. If the engine stalls, restart immediately.
If water has entered the engine air intake, switch off immediately. The vehicle **must** *be recovered from the water and be transported to a Land Rover Retailer/Authorized Repairer.*

DRIVER OVERRIDE OPTIONS

Although Dynamic Stability Control is automatically engaged when a special program is selected, it can be turned off if required.

Hill Descent Control (HDC) and air suspension height change will be automatically engaged for some terrain response programs. If required, they can be deselected or engaged independently of terrain response.

The HDC status will be displayed on the message center whether it is engaged, or disengaged, by the system or by the driver.

Gradient Acceleration Control is one of the automatic systems incorporated into Terrain Response. It is not active while HDC is operating. At any other time when the vehicle may accelerate due to a gradient, system generated brake pressure will temporarily limit that acceleration, giving the driver time to establish control.

Hill Start Assist is also applied automatically. The system operates in a similar manner to Gradient Release Control but does not require HDC to be active. See **GRADIENT RELEASE CONTROL (GRC)** (page 116).

SYSTEM DIFFICULTIES

NOTICE

Use of an incorrect program will impair the vehicle's response to the terrain and can reduce the life of the suspension and drive systems.

If the system becomes partially inoperable for any reason, it may not be possible to select special programs.

If a participating vehicle system becomes temporarily inoperable, the General program will be automatically selected. Once the system returns to normal operation, the previously active program will be re-activated unless the ignition has been turned off in the mean time.

If you try to select an inappropriate special program (e.g. selecting Rock crawl while in High range), the relevant indicator will flash amber and the message center will provide further information. If the appropriate action is not taken within 60 seconds, the warnings will cease and the message center will show the active program.

If the system becomes completely inoperable, all of the special program indicators will be switched off and a relevant message will be displayed in the message center.

SELECTING HDC

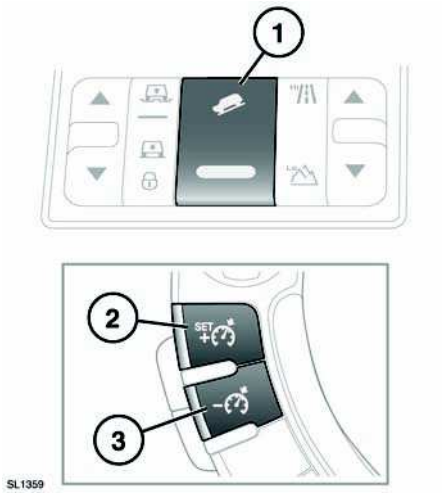

1. Press to switch HDC on and off.
2. Press to increase the set speed.
3. Press to decrease the set speed.

HDC can be selected at speeds below 50mph (80km/h) but will not activate until vehicle speed drops to less than 30mph (50km/h).

The green warning lamp in the message center will illuminate while HDC is active.

HDC can be used in **D**, **R** or CommandShift **1** when in Hi range and in **D**, **R** and all CommandShift gears when in Lo range. When in **D**, the vehicle will select the most appropriate gear.

Note: *HDC is automatically selected by some of the Terrain response special programs.*

To select HDC, press and release the HDC on/off switch (**1**).

If the HDC lamp flashes, HDC has been selected but is not operating. This is caused by the system's operating conditions not being met (e.g. vehicle speed too high).

If HDC is deselected while operating (either manually or due to a fault developing), the HDC lamp will flash and the system will fade out, allowing the vehicle speed to gradually increase.

If the vehicle speed exceeds 50mph (80km/h) HDC will disengage and the HDC lamp will extinguish.

Note: *HDC is automatically deselected if the ignition is switched off for more than 6 hours.*

HDC OPERATION

With HDC engaged, the speed of descent can be altered using the cruise control steering wheel switches, as follows:

- To increase speed press and hold the **+** switch (**2**) until the desired speed is achieved. Maximum HDC descent speed is 12mph (20km/h) in Low range and 19mph (30km/h) in High range.
- To decrease speed press and hold the **-** switch (**3**) until the desired speed is achieved.

  Note: *HDC can achieve a lower descent speed in Low range gears.*

When the switch is released, the selected speed will be maintained. The target speed will be displayed in the message center.

To increase or decrease speed gradually, tap the **+** or **-** switch as required. Each tap of the switch will increase/decrease the speed in increments/decrements of 0.3mph (0.5 km/h).

The accelerator pedal can also be used to increase speed, up to the threshold in each gear.

Note: *Each gear has a pre-determined minimum speed.*

Descent speed will only increase on a slope steep enough to provide additional momentum. Therefore, use of the **+** switch on a gentle slope may not increase the speed.

If the brake pedal is depressed, HDC will be overridden and the brakes will operate as normal. When the brake pedal is released, HDC will resume control of the descent.

If HDC is switched off during a descent via the brake pedal, HDC assistance will fade out gradually. This is to prevent loss of control if HDC is switched off in error. HDC will resume control when switched back on if assistance is still required, but at the speed the vehicle is travelling when the brake pedal is released.

⚠WARNING

Do not attempt a steep descent if HDC is inoperative or warning messages are displayed.

GRADIENT RELEASE CONTROL (GRC)

With HDC activated, if the vehicle is stopped on a slope using the foot brake, GRC will become active (except in Terrain response Sand program).

During a hill ascent when the foot brake is released GRC will automatically delay and graduate the brake release, to allow the vehicle to move away smoothly.

When descending a hill, a similar brake hold and gradual release is employed to provide a smooth transition into HDC control.

GRC operates in forward and reverse gears and requires no driver intervention.

BRAKE TEMPERATURE

In extreme circumstances, the HDC system may cause brake temperatures to exceed their pre-set limits. An **HDC** warning will be displayed in the message center. HDC will then fade out and become temporarily inactive.

Once the brakes have reached an acceptable temperature, the message will disappear (or the warning indicator will extinguish) and HDC will, if required, resume operation.

SYSTEM FAULT

If a fault is detected in the HDC system, an **HDC** warning will be displayed in the message center.

If the fault is detected while the system is operating, HDC assistance will fade out.

If a fault is detected, contact your Land Rover Retailer as soon as possible.

AUTOMATIC SYSTEMS

Gradient Acceleration Control (GAC) and Hill Start Assist are not active while HDC is operating.

GAC will limit vehicle acceleration on steep descents, allowing the driver to feel more in control of the vehicle.

Hill Start Assist activates when starting a hill ascent from a stationary position. When the foot brake is released Hill Start smoothly releases the brake pressure, allowing the vehicle to move away without rolling backwards.

Any fault with GAC or Hill Start Assist will be indicated by the DSC warning lamp being illuminated and a message in the message center.

REAR VIEW CAMERA

⚠WARNING

Always turn and look before reversing. It remains the driver's responsibility to detect obstacles and estimate the vehicle's distance from them when reversing.

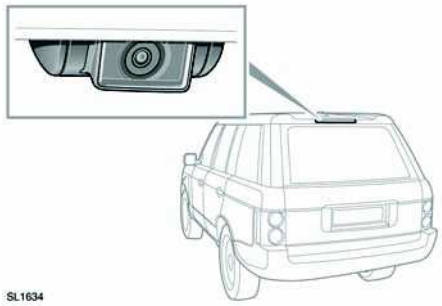

When Reverse gear is selected, the touch screen automatically displays the view to the rear of the vehicle.

Overlaid on the rear view image are colored dashed lines representing the perimeter of the vehicle, solid lines predicting the path of the vehicle (based on the position of the steering wheel) and the distance information from the Parking aid system.

NOTICE

Some overhanging objects or barriers which could cause damage to the vehicle, may not be detected by the camera.

Note: *A return icon is displayed in the bottom right hand corner of the touch screen. Touch this to revert to the previously viewed screen.*

Rear view camera display on the touch screen will discontinue when either of the following apply:

- Drive is selected for longer than 15 seconds.
- Drive is selected and/or vehicle speed is greater than 11mph (18km/h).

SURROUND CAMERA SYSTEM

⚠WARNING

It remains the driver's responsibility to detect obstacles and estimate the vehicle's distance from them when reversing.

The camera home page is accessed by touching **Cameras** on the **Home menu** screen.

With the engine running and Park or Neutral selected, the surround camera system uses 5 discretely placed cameras to assist in maneuvering the vehicle.

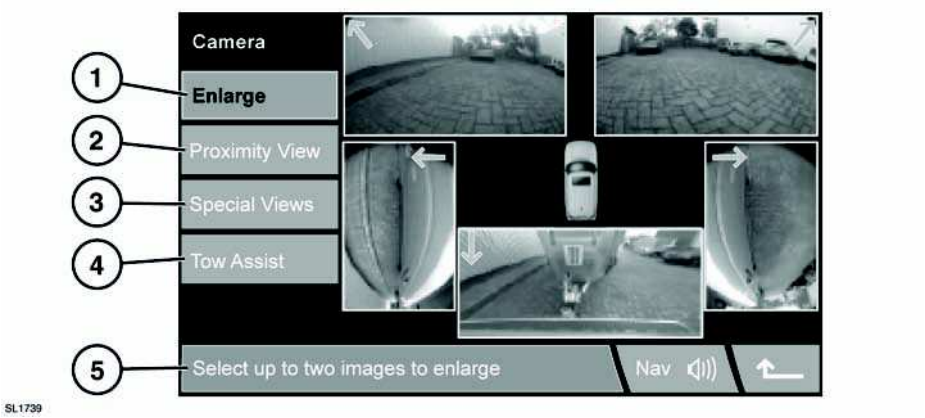

SL1739

1. **Enlarge**:

   To enlarge a camera view, touch the image then touch the **Enlarge** soft key. Any two images can be selected and enlarged to view side-by-side on the screen.

   When viewing two images, one of them can be selected to view as a full screen image. It can then be zoomed into and panned around using the magnifier and arrow icons.

2. **Proximity View**:

   Selecting **Proximity View** will display a combination of three images from the front and passenger side cameras.

   Note: *Proximity view can be accessed at any time, by touching* ***Proximity View*** *on the* **Camera** *home page.*

3. **Special Views**:

   A selection of pre-set views can be displayed by selecting **Special Views**. They are provided to assist with difficult maneuvers and are:

   - **Curb view:** Shows views from the two front cameras.
   - **Junction view:** Shows views from the two side cameras.
   - **Trailer view:** Shows the rear camera view.

4. **Tow Assist**:

   Tow assist aids trailer reversing, by displaying information on the touch screen when reverse gear is selected.

   Colored lines are displayed to indicate the predicted path of both trailer and vehicle.

   Note: *Tow assist requires a connected trailer to be fitted with a tracking target sticker. The sticker* ***must*** *be attached according to specific instructions. Ask your Land Rover Retailer for details.*

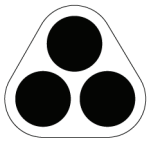

SL1315

Note: *This feature may not operate with all trailer designs. The towing electrical socket must be a Land Rover approved socket.*

Tow assist becomes active when a trailer is attached to the vehicle and the trailer electrical plug is attached to the vehicle socket. The screen will display a choice for connection. Select **YES** to move to the setup screen. Select **NO** to return to the previous screen.

Information such as trailer length, number of axles and camera preference is required to finalise setup.

Once completed, the details are stored for future use.

Note: *If the connection is not detected, setup can be manually prompted by touching the Tow assist icon on the Camera menu.*

5. Allows you to select any two of the views and enlarge to fill the screen.

CAMERA CLEANLINESS

If the color of the camera position arrow in the display changes from blue to red, the system has detected that the camera is dirty. Clean the camera in accordance with the guidelines given in the Maintenance section. **198, CLEANING THE INTERIOR**

OVERVIEW

Note: *Physical controls on the audio facia are referred to as hard keys. Virtual buttons on the touch screen are referred to as soft keys.*

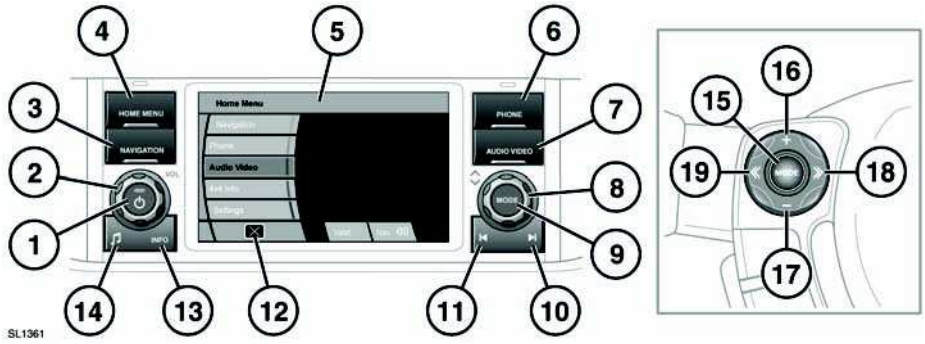

1. On/off. The first time of switching on will display the **Home Menu**. Subsequent switch on will display the last used screen or menu.
2. Volume. Maximum volume is restricted if the engine is turned off.
3. **NAVIGATION**. Press to display the Navigation menu.
4. **HOME MENU**. Press for direct access.
5. Touch screen Home Menu.
6. **PHONE**. Press to display the Phone menu.
7. **AUDIO VIDEO**. Press to display the Audio/Video menu.
8. Scroll up/down a menu.
9. **MODE**. Press to display modes. Rotate the control to make a selection.
10. Search up/increase. Press to select the next radio station frequency up or next track on the chosen audio source.
11. Search down/decrease. Press to select the next radio station frequency down or previous track on the chosen audio source.
12. Touch screen turn off. Touch the blank screen to turn on again.
13. **INFO**. Briefly press to turn on TA (Traffic Announcement). The **TA** indicator will appear in the information display. When a selected radio station is capable of providing traffic information, **TP** will also be displayed. When a traffic message is received, **TRAFFIC** will alternate with the station name.

    Press and hold to select **NEWS**. This feature works in the same manner as **TA**.

    To cancel an announcement, press **INFO**.
14. Tone. Press to display the Tone menu.
15. Mode select.
16. Volume up.
17. Volume down.
18. Search up.
19. Search down.

⚠WARNING

Do not adjust the touch screen controls, or allow the system to distract the driver while the vehicle is moving. Driver distraction can lead to accidents, causing serious injury or death.

HOME MENU

Press the hard key. Selection of **Navigation**, **Phone** and **Audio Video** menus can be made from this menu or from hard keys.

Selection of the **4 x 4 Info** and **Settings** menus can be made only from the **Home Menu**.

Valet is an area for applying security settings to the luggage compartment, glove box and touch screen functions when you are passing the vehicle to another person.

Valet can also be accessed via the **Vehicle Settings** menu.

Rear Entertainment will access the RSE Supervisor screen. This gives control over all rear screen activity.

Cameras gives access to the surround camera system. This is described in the **Camera systems** section of the handbook.

SETTINGS

Settings can be adjusted to suit your personal requirements.

From the **Home Menu**, touch the **Settings** soft key. Select a category soft key.

SYSTEM SETTINGS

Touch to change the display language, to change display units, e.g. miles or kms, to adjust audible feedback when a soft key selection is made and to adjust the clock time and date settings. Use the scroll soft keys to view selection choices. When a change is made, confirm it by touching the **OK** softkey.

Note: *The navigation system language must be set separately. When Navigation is selected, touch the* **Language** *soft key on the* **CAUTION** *screen.*

SCREEN SETTINGS

Touch to adjust screen brightness. The **Reset** soft key will return brightness to the center setting.

VEHICLE SETTINGS

Valet mode can be selected.

At times when another person will be driving your vehicle during your absence, e.g., a parking attendant, you may wish to use the security settings for luggage compartment, glove box and touch screen.

Touch the **Valet** soft key. Use the keypad to enter a four digit code. Cancel any entered number with the **C** soft key. Touch **OK** to enter the code. Enter the same code again and touch **OK** to confirm.

This process will lock the luggage compartment and glove box and limit touch screen functions.

Note: *Remember to take the emergency key blade with you to ensure security is complete.*

When you take back the vehicle, enter your four digit code on the **Valet Mode** screen. Touch **OK** to confirm. The security settings will be turned off.

Note: *If you forget your four digit code, only a Land Rover Retailer will be able to deactivate it.*

VOICE SETTINGS

In this area changes can be made to the language used by the system when communicating with the driver and to voice tags added to telephone numbers. The voice tags are described later in the **Telephone** section.

A **Help** feature with examples of voice commands can be accessed.

Use the scroll soft keys to view selection choices. When a change is made, confirm it by touching the **OK** softkey.

AUDIO SOUND SETTINGS

⚠WARNING

Sustained exposure to high sound levels can damage your hearing.

Tone and volume settings are accessed via the hard key on the audio system facia.

Briefly press the tone hard key to display the **Tone** screen.

Bass, treble and sub woofer settings can be adjusted on the sliders.

Balance and fade can be adjusted to set the focus point for sound delivery.

Source Memory allows personal settings to be memorized for individual audio sources.

Logic 7 is particularly useful when the original audio source is of high quality. When selected, a seven channel feed provides enhanced audio effects.

To access volume settings, press and hold the tone hard key until the **Volume** screen is displayed.

AVC (Automatic Volume Control), **INFO**, **NAV**, **Phone** and **Voice** can be adjusted individually to suit personal requirements.

Use the + and - soft keys to make adjustments. The volume setting is displayed alongside the feature.

For **AVC**, the screen setting represents the amount by which volume will increase with vehicle speed. The higher the setting, the greater will be the volume boost at higher speeds.

The **INFO** setting relates to any radio announcements that may interrupt your current mode.

NAV and **Voice** are used to adjust the system feedback voice.

Use **Phone** to adjust call volume.

TOUCH SCREEN CARE

NOTICE

Always run the engine during prolonged use of the touch screen. Failure to do so may discharge the vehicle battery, preventing the engine from starting.

NOTICE

Avoid spilling or splashing liquids onto the touch screen.

Do not use any abrasive cleaners on the touch screen.

The touch screen and inner bezel must be kept clean to maintain optimum performance. Clean finger marks with a soft cloth and Land Rover approved cleaning agent. Contact your Retailer for details.

Avoid exposing the screen to direct sunlight for long periods.

When operating touch screen soft keys, use only one finger. Using more than one finger at a time may cause false inputs.

RADIO MENU

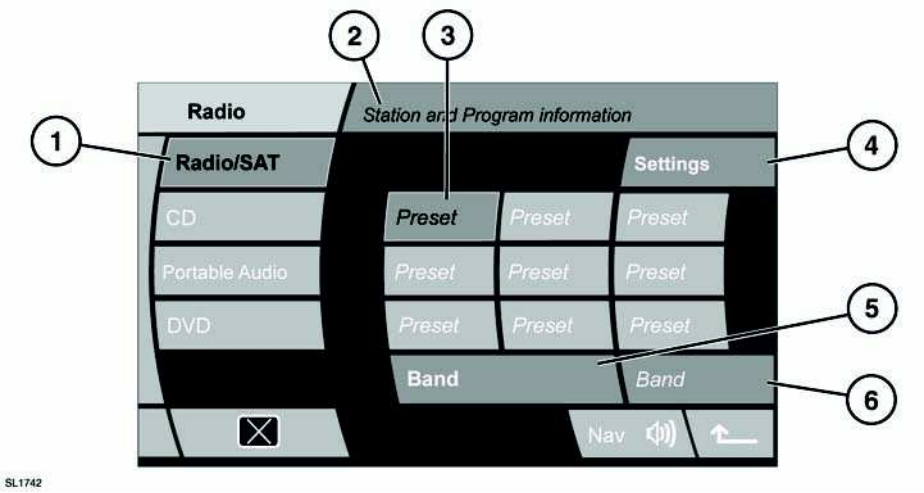

⚠WARNING

Do not adjust the touch screen controls or allow the system to distract the driver while the vehicle is moving. Driver distraction can lead to accidents causing injury or death.

1. **Radio** mode select.
2. Information area.
3. Station presets: Each waveband has 9 preset positions.
   - Touch and hold to store the current station on that preset (the radio will mute while the station is stored).
   - Touch and release to tune to the station stored on that preset.
   - Use the search controls on the steering wheel to change to the next or previous preset station. Alternatively, use the facia search controls.
4. **Settings**. Tuning (Autostore and manual), RBDS and PTY (program type) settings.
5. Waveband selection: Touch to cycle through the available wavebands. The radio will tune to the last used station on that waveband.
6. Selected waveband display. Touch and hold to select Autostore.
   - If no stations are currently stored on the presets, select this soft key to store up to 9 of the strongest stations on the current waveband (the radio will mute during this process).
   - If preset and autostore preset stations are already stored, a long touch will start a new autostore process.

AUTOSTORE STATIONS

There are two methods to start the autostore process. Touch and hold the **waveband display** soft key (**6**) to start **Autostore**.

Alternatively, touch the **Settings** soft key.

Touch the **Tuning** soft key.

Touch **Autostore**. When storing is complete, the station with the strongest signal will begin play.

If required, repeat for the other wavebands. The A suffix of a waveband designation represents Autostore.

To select an autostore station, first select the autostore waveband then touch the appropriate preset soft key.

SEARCHING FOR STATIONS

Use the audio facia search hard keys or the steering wheel search buttons.

The main **Radio** screen will display station information. If another mode is in use, the station information will be displayed briefly on a pop up screen.

Alternatively, while in **Radio** mode, rotate the **Mode** control to scroll through the available stations.

MANUAL TUNING

To manually input a frequency, touch the **Settings** soft key.

Touch the **Tuning** soft key. Enter the first digits of the frequency.

Note: *Only some of the digits will be enabled. These are the only digits available to start the frequency. When the first digits have been input, further available digits will be displayed.*

When the desired frequency has been entered, select **OK** to confirm.

RADIO DATA SYSTEM (RBDS)

Your audio unit is equipped with RBDS, which enables the audio unit to receive additional information with normal radio signals.

Note: *Not all FM radio stations broadcast RBDS.*

With **FM** selected, touch **Settings** then **RBDS Settings**, to view or alter RBDS settings.

- **RBDS**: Select on or off
- **Regionalisation**: Select **On** to enable radio retuning to an alternative local station that has a stronger signal.
- **Alternative Frequency**: Select **On** to allow the radio to automatically re-tune to a stronger alternative frequency for the current station. This is useful on long journeys, where the vehicle travels through different transmitter areas.

PRIORITY PROGRAM TYPE (PTY)

PTY works in conjunction with RBDS and is active in FM radio, CD and Portable audio modes. It has two functions:

1. To set a desired PTY category (rock music, classical music, current affairs, politics etc) for the current station.
2. To search for and tune to a station in the selected PTY category.

To view the list of available PTY categories, select **Settings** and then **PTY**.

Note: *The PTY menu is not available when the vehicle is in motion.*

Setting a PTY category for the current station:

- Scroll down the list until the desired category is displayed, then touch the category to select.
- Touch the Back (previous screen) arrow in the bottom right-hand corner of the touch screen.

  Note: *There will be a short wait for RBDS to indicate that the station has changed its program type.*

If reception for the current station is subsequently lost, the radio will attempt to tune to an alternative station with the same PTY category.

RECEPTION DIFFICULTIES

There may be times during a journey when reception is poor. This is rarely the fault of the radio receiver. There are many reasons for poor reception, e.g.:

- Tall obstacles, e.g., buildings.
- Tunnels.
- Mountainous regions.
- Distance from a transmitter.

These will have varying effects on your radio:

- Signal phasing.
- Cross over of channels.
- Distortion.
- If **INFO** has been selected **TP** will begin to flash then **TP SEEK** will be displayed while a strong signal is searched for. If the search fails, **Not Found** is displayed.

RBDS will help to reduce the effects of signal change.

CONTROLS

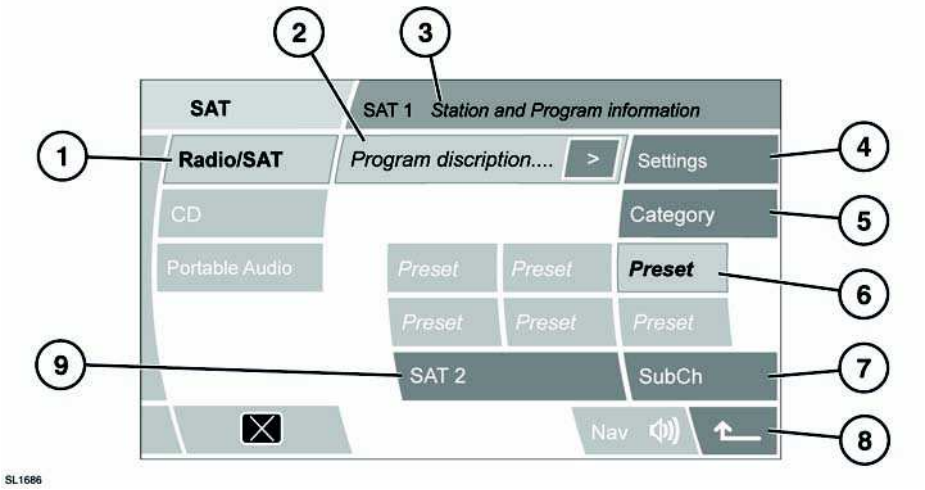

⚠WARNING

Do not adjust the touch screen controls, or allow the system to distract the driver while the vehicle is moving. Driver distraction can lead to accidents, causing serious injury or death.

1. Touch to select Satellite radio playback. Touch again to select FM radio playback.
2. Displays information relating to the current channel, such as song/program name etc. Touch the arrow soft key alongside, to view more information.
3. Displays the satellite band number (SAT1, SAT2 or SAT3), the channel number, station name and channel category.
4. Settings - select to view the Settings menu:
   - **SAT Info**: Select to view the your vehicle's Electronic Serial Number (ESN) and the contact details of your Satellite radio provider.
   - **Direct Channel Input**: Select to use the numeric key pad to enter a 3-digit channel number (e.g. 012), then select OK to tune to that channel. Only numbers that make up a valid channel number are available for selection.
   - **Channel Skip**: Select individual channels or entire categories from the list. The selected channels/categories will be skipped when using the Seek controls.
5. Touch, then select a category from the displayed list. The system returns to the previous screen, but with the category displayed in square brackets (e.g. [ROCK]). Press the Seek hard keys to change the category again. If no further change to the category is made within 30 seconds, the square brackets are removed.

   If a different category is selected from that currently being played, then the playing channel will become the first active channel in that category.

6. Channel presets: Each satellite band has 6 preset positions.
   - Touch and release a preset soft key to tune the radio to the channel stored on that preset.
   - Touch and hold to store the current channel on that preset (the radio will mute while the channel is stored).
   - Use the Seek hard keys to select the next or previous preset channel.
7. Available for selection when the current channel also broadcasts subchannels. Select to view and select an available subchannel.
8. Back: Select to return to the previous screen.
9. Satellite band selection: Touch and release to toggle between the 3 satellite bands (SAT1, SAT2 and SAT3).

SUBSCRIPTION SETUP

Channel 184 (The Weather Channel) is available as a preview channel for a limited time only. Once the preview has expired, or to receive further satellite radio stations, you will need to subscribe to SIRIUS.

From inside your vehicle and with ignition on, call SIRIUS using the number displayed in the SAT Info screen (available from the Settings menu). You will need your credit card details and the Electronic Serial Number (ESN) which is also displayed on the SAT Info screen.

Subscription authorization/activation can take up to 15 minutes.

SATELLITE RADIO RECEPTION

Satellite radio can significantly increase the number of radio channels available.

Where satellite signal strength is adversely affected by terrain, ground transmitters are used to relay the signal.

Note: *If any auxiliary electrical equipment is connected to the vehicle, then this may reduce the radio sound quality.*

CHANNEL UPDATE

Channel line-ups will be automatically updated. When this occurs, the audio will mute and Updating channels... is displayed.

Once the update is complete, the radio will tune to the last tuned channel, or if the last tuned channel is now invalid, the radio will tune to the lowest channel number available.

CD PLAYER MENU

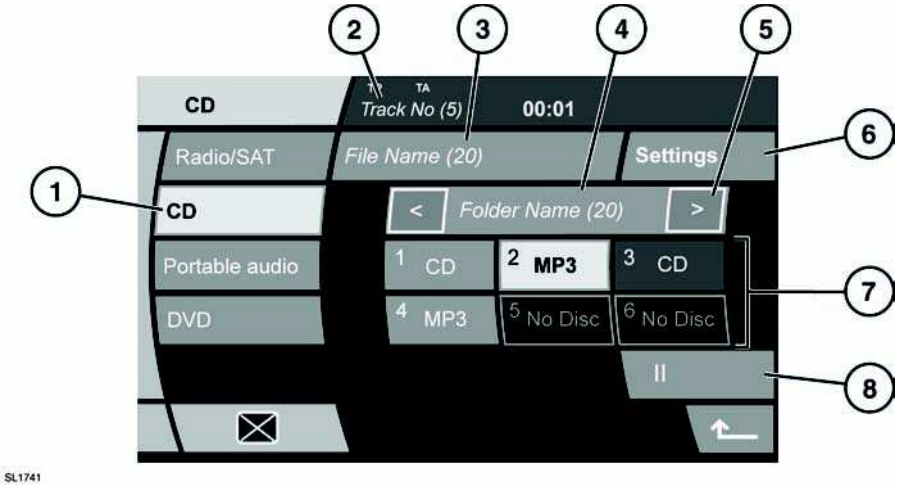

⚠WARNING

Do not adjust the touch screen controls or allow the system to distract the driver while the vehicle is moving. Driver distraction can lead to accidents causing injury or death.

1. **CD** mode select.
2. Information area. Current track number and time elapsed.
3. Track information and the total number of tracks on the CD.
4. MP3 folder information.
5. Use the arrow soft keys to navigate between MP3 folders. If a folder is displayed for two or more seconds, the content of that folder will begin play.
6. **Settings**. Options for Random play, Repeat and CD scan.
7. CD select. Shows which of the six CD magazine slots are in use and what type of media is on the CD.
8. Pause play. Touch again to resume play.

PLAYING A COMPACT DISC

If a CD is loaded, playback will resume from the point of last play. If no CD is present, **No disc** will appear in the display.

A CD containing MP3 tracks may take longer to load if there are more tracks than on a normal CD. To minimise loading time, a rigid folder structure is recommended.

Touch a CD select soft key to load and begin play of that CD. CD and track information will be displayed.

If RBDS is on, Traffic and News information may interrupt CD play. Briefly press the INFO hard key to cancel or return to Radio mode and turn RBDS off.

CD TRACK SELECTION

Pressing and holding the search hard keys or steering wheel controls will fast forward or rewind the CD.

PLAY OPTIONS

Select **Settings** for the following options;

- **Random**: Select to play tracks in a random order. Touch again to cancel.
- **Repeat**: Select to play the current track repeatedly.
- **Scan**: Select to play the first 10 seconds of each track on the CD in turn.

  Note: *Repeat and Scan can be cancelled by pressing the track up or down button.*

If a different audio source is selected, or the unit is turned off, the selected play option will be cancelled.

MP3 FILE PLAYBACK

If an MP3 CD is to be used, each session must be properly closed, but the whole disc does not have to be finalised.

When Track list is selected, the list of folders and MP3 files is displayed in alphabetical order. Select a folder to view, and select the tracks contained within.

- Only CDDA discs can be loaded into the CD player.
- The highest compression rate supported, is 320k bits per second (kbps). If anything less than 128 kbps is used, Digital Signal Processing (DSP) functionality may be lost.
- The CD player may take a longer time to load an MP3 disc, if there are more tracks than on a normal CD. To minimise loading time, a rigid folder structure is recommended.
- If a CD contains a mixture of MP3 and CDDA tracks, any MP3 tracks will be ignored.

LOADING COMPACT DISCS

NOTICE

Do not use irregular shaped CDs or CDs with a scratch protection film or self-adhesive labels attached. It is likely that the disc will not eject and will block the CD mechanism. Such damage to a CD player will not be covered under warranty.

NOTICE

The CD unit will play compact discs that conform to the international Red Book standard audio specification. Playback of CDs not conforming to this standard cannot be guaranteed.

NOTICE

Recordable (CD-R) discs and re-writable (CD-RW) discs, may not function correctly.

NOTICE

Dual format, dual-sided discs (DVD Plus, CD-DVD format), are thicker than normal CDs and consequently, playback cannot be guaranteed and jamming may occur.

It is recommended that only high quality 12 cm (4.7 in.) circular discs are used.

The unit will play the following formats:

- Compact Disc Digital Audio (CDDA) discs.
- MP3 files.
- WMA files.
- WAV files.
- AAC files.

Note: *Copy-protected CDs may fail to play in your CD changer or may be played subject to various limitations (e.g. sound quality may be impaired). If you experience a problem, try the CD in other players before contacting the CD vendor.*

CD AUTOCHANGER

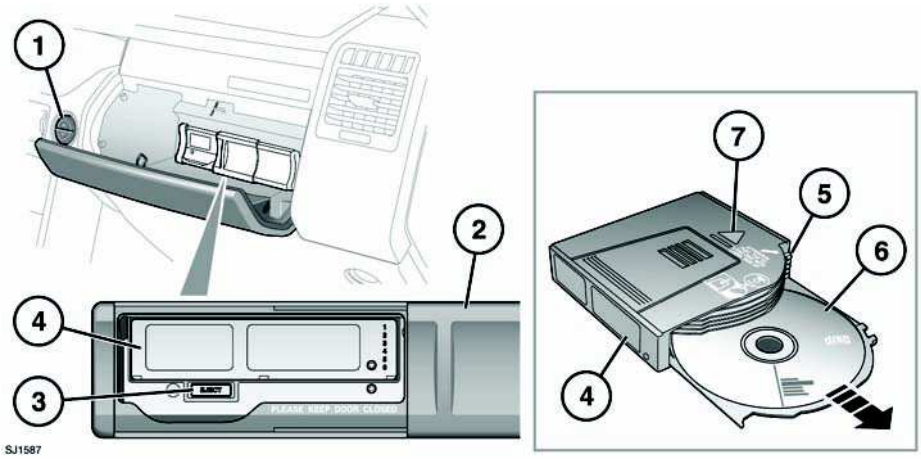

⚠WARNING

Do not change the CDs or allow the CD autochanger system to distract the driver while the vehicle is moving. Driver distraction can lead to accidents causing injury or death.

1. Press to open the upper glove box.
2. Slide the door open.
3. Press to eject the CD magazine.
4. CD magazine.
5. Pull out a CD tray by its tab.
6. Place a CD, with its label on top, into the tray. Ensure it is located properly. Close the tray.
7. Insert the CD magazine into the autochanger in the direction of the marked arrow.
8. Close the sliding door.

PORTABLE AUDIO

⚠WARNING

Do not adjust the auxiliary device, or allow the device to distract the driver, while the vehicle is moving. Driver distraction can lead to accidents, causing serious injury or death.

⚠WARNING

Make sure that any auxiliary devices are stored securely while the vehicle is in motion. Any loose objects are potential hazards during sudden maneuvers, emergency braking or accidents.

NOTICE

Do not place any item connected to the auxiliary input socket or the auxiliary power socket on the seats, carpets, or other upholstery. The heat generated by these devices may cause damage to the vehicle and, in some extreme cases, cause a fire.

NOTICE

Read the manufacturer's instructions for any device, before it is connected to the audio system. Ensure that the device is suitable, and comply with any instructions regarding connection and operation. Failure to do so may result in damage to the vehicle's audio system or the auxiliary device.

PORTABLE MEDIA CONNECTIONS

Portable audio devices can be connected to the media hub, located in the cubby box. Auxiliary devices can be connected to the AUX socket at the rear of the center console.

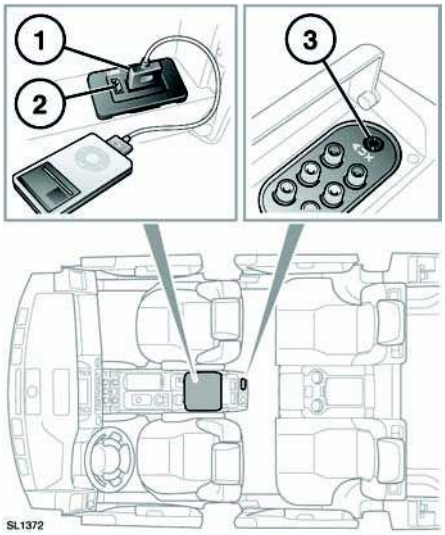

1. USB socket.
2. Portable audio/iPod socket.
3. 35mm AUX socket.

Portable devices that can be connected include:

- USB mass storage devices (e.g. a memory stick). Devices must use FAT or FAT32 file format.
- iPod® (iPod Classic®, iTouch®, iPhone® and Nano® are supported - full functionality for older devices cannot be guaranteed). iPod Shuffle® functionality cannot be guaranteed.

  Note: *iPod® is a trademark of Apple Computer Inc., registered in the US and other countries.*

  Note: *A dedicated iPod lead is available from your Land Rover Retailer.*
- Auxiliary device (personal audio, MP3 players, all iPods®).

Note: *iPod shuffle may be connected via the AUX socket.*

If you are connecting an iPod® or mass storage device, use the touch screen to operate and search the device. Many of the controls are similar to those available for CD play.

If you are using any portable media device via the AUX socket, then you must control playback from the device itself.

Note: *The audio system will play MP3, WMA, WAV and AAC files.*

PORTABLE AUDIO MENU

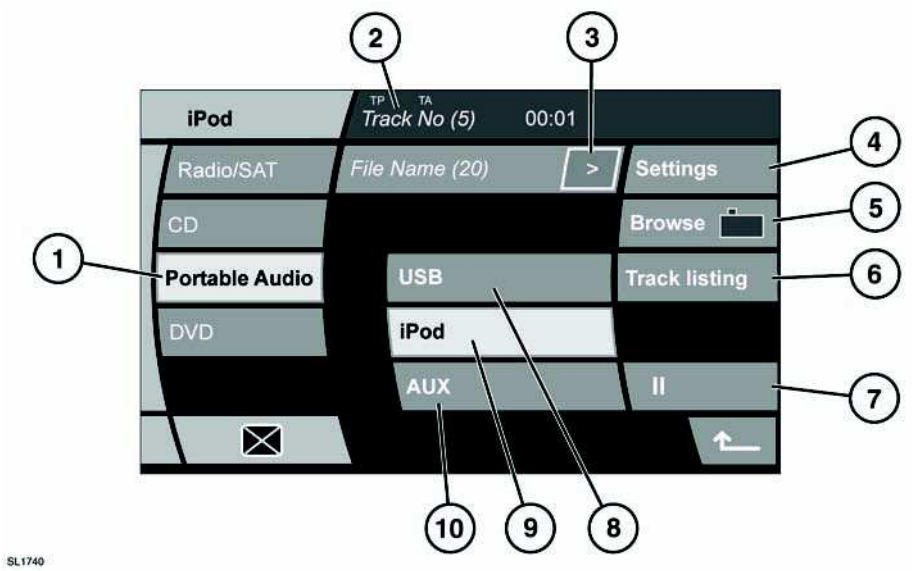

⚠WARNING

Do not adjust the touch screen controls, or allow the system to distract the driver while the vehicle is moving. Driver distraction can lead to accidents, causing serious injury or death.

1. **Portable Audio** mode select.
2. Display of information about the current track, including elapsed run-time and play mode (Mix or Repeat).
3. Select to view more detailed information about the current track. Touch briefly to toggle through the information. Touch and hold to display the portable media text pop-up screen. Touch the pop-up to close.
4. **Settings**. Options for:
   - **Random**: Touch briefly to randomly play tracks in the current folder. Touch and hold for 2 seconds to play all tracks on the device.
   - **Repeat**: Touch briefly to repeat the current track. Touch and hold for 2 seconds to play all tracks in the current folder, then repeat.
5. **Folders** (iPod®/USB only):
   - Select to view the contents of the connected device which are displayed as dictated by the file structure of the device.
   - Select a file to start playback (Browse view will remain). Select a folder or subfolder to view their contents.
   - Select **Page jump** to jump through longer lists of items.

- To return to the Controls menu, select the Back soft key.

6. **Track listing**. Select to view list of available tracks. Scroll to view previous or next tracks. Select a track to review it.
7. Pause/Play. Select to pause playback. Select again to resume playback.
8. **USB**. Touch to select playback from a USB device.
9. **iPod**. Touch to select playback from an iPod.
10. **AUX**. Touch to select playback from an auxiliary device.

PLAYING A DEVICE

NOTICE

Disconnect your iPod® when leaving the vehicle. Failure to do so may result in the iPod® battery discharging.

NOTICE

During high ambient temperatures or direct bright sunlight, it is advisable to unplug and remove portable media devices from the vehicle.

When an iPod® is connected, playback will continue from the point at which it was last playing, provided the iPod® battery is in a good state of charge.

When a USB device is connected, playback will start from the first track in the first available folder. If a device is already connected when **Portable Audio** is selected, playback will continue from the point at which it was last playing.

When an auxiliary device is connected, playback will start when the device is switched on and played.

Note: *To maximise playback quality, it is recommended that lossless compression is used for any media files on USB or iPod®. Failing this, it is recommended that compressed files utilise a minimum bitrate of 192 kb/s (a higher bitrate is strongly recommended).*

Note: *Some MP3 players have their own file system that is not supported by this system. To use your MP3 player, you must set it to USB Removable Device or Mass Storage Device mode. Only music that has been added to the device in this mode can be played.*

Note: *The volume levels and sound quality available from devices connected to the auxiliary inputs may vary widely. If the connected audio device is equipped with a line out socket, as well as a headphone socket, the line out socket should be used.*

CONNECTING MULTIPLE DEVICES

NOTICE

Do not plug non-audio devices into the USB port.

You can connect multiple devices to the portable media interface simultaneously and switch between them using the touch screen. Select **USB** or **iPod**, to switch between modes.

The device docked first will remain the active device, until you choose to change.

If, after changing to the newly-docked device, you change back to the first device, play will resume at the point you left it (USB and iPod® only).

Note: *You cannot use a USB hub to connect more than one USB device to the audio unit.*

Note: *Devices connected to the iPod® and USB ports will be charged, but devices that are fully discharged will not play.*

Note: *Options such as* ***Repeat*** *and* ***Random****, relate to the device currently playing, they will not apply to any subsequent device.*

SEARCHING A TRACK

Use the audio facia hard keys or steering wheel controls for next/previous and fast forward/reverse track searches.

AUX INPUT SOCKET

Note: *On vehicles fitted with rear seat entertainment, additional Audio/Visual sockets (AV1 and AV2) are provided. This allows auxiliary equipment (such as a video game console) to be linked to the rear DVD screens. For installation information, please refer to the manufacturer's instructions.*

ACCESSING AND LOADING THE DVD PLAYER

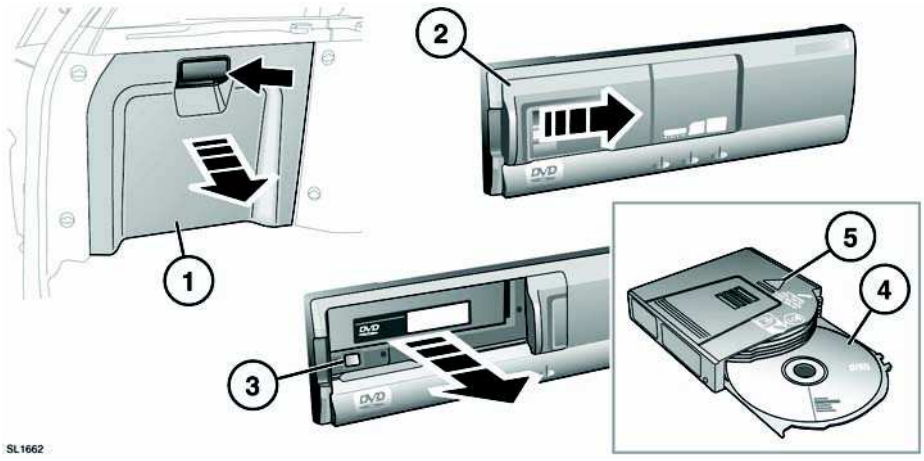

The DVD player is located in the luggage area on the left hand side.

1. Open the access hatch.
2. Slide the player door open.
3. Press the eject button to release the magazine.
4. Load a disc into the magazine with the label side facing upwards.
5. Insert the magazine into the DVD player in the direction of the marked arrow.
6. Close the sliding door and the access hatch.

The player will play 4.7in. (12 cm) DVDs, Video CDs and audio CDs.

Note: *Video CDs will have fewer options available from their menus.*

SL1519

The DVD player is not compatible with High Definition DVD discs, DVD-ROMs, DVD-RAMs, Photo CDs, MP3s or DVD plus discs.

NOTICE

Do not leave the DVD player door in the open position. Ingress of dirt or moisture can reduce playback quality and may result in damage to the player.

NOTICE

Do not place any device/object that emits a magnetic field near to the player.

NOTICE

Do not insert any object other than the recommended discs into the player.

NOTICE

Ensure that discs are clean/dust-free, before inserting into the player.

Note: *This product incorporates copyright protection technology that is protected by method claims of certain U.S. patents and other intellectual property rights owned by Macrovision Corporation and other rights owners. Use of this copyright protection technology must be authorized by Macrovision Corporation and is intended for home and other limited viewing uses only unless otherwise authorized by Macrovision Corporation. Reverse engineering or disassembly is prohibited.*

VIEWING FROM THE FRONT SCREEN

DVD content can be viewed on the front screen while the vehicle is stationary. The park brake must be engaged and Park selected. As soon as another gear selection is made, the driver view will revert to a non DVD screen. A speed inhibit feature will disable preview display at a factory set speed.

DVD CONTROLS

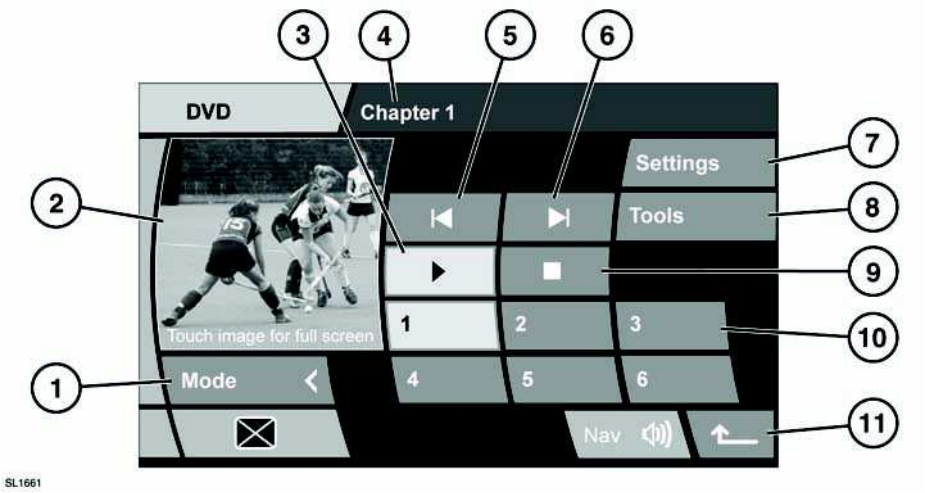

⚠WARNING

Do not adjust the touch screen controls, or allow the system to distract the driver while the vehicle is moving. Driver distraction can lead to accidents, causing serious injury or death.

1. **Mode**. Touch to return to source selection menu.
2. Preview screen. Touch to select full screen mode. Screen appearance choices will be displayed for five seconds. Touch to make changes.
3. Touch to start play or resume play. Touch and hold for slow motion play. Touch again for normal speed play.
4. Program information.
5. Backwards/Previous softkey. Touch and hold for fast play.
6. Forwards/Next softkey. Touch and hold for fast play
7. **Settings**. Touch to access DVD format settings.
8. **Tools**. Touch to access DVD program control screen.
9. Touch once to pause current program. Touch twice to stop play and return to the start of the program.
10. Numeric soft keys for DVDs loaded into the changer unit.
11. Touch to return to previous screen.

The **AUDIO VIDEO** hard key can be used to access the main DVD control menu.

DVD MENU SELECTION

There are 2 methods for selecting DVD mode.

Access via the **AUDIO VIDEO** hard key:

1. While in another viewing mode (e.g. Navigation), press the **AUDI VIDEO** hard key.

2. Select the **Audio Video** soft key to access DVD. If a further selection is not made within five seconds, the left side selection soft keys will be replaced with a **Mode** soft key and a preview area.

Access via the Home menu:

3. Press the **HOME MENU** hard button.
4. Touch the **Audio Video** soft key to access the audio/video menu.
5. As in the first access method, select DVD with the **DVD** soft key.

PLAYING A DVD

To select and play a disc:

1. Touch the numeric soft key that the required disc is loaded to. The disc menu will display in the preview area.
2. Touch the play soft key.

DVD SPECIAL FEATURES

Select **Tools**.

Menu:

DVD play must be stopped before this menu will display. A long touch of the **Menu** soft key will display the DVD changer menu.

Use the direction soft keys plus **Return** and **Enter** to modify the DVD changer menu.

GOTO:

When a DVD has title, chapter and time information, it can be accessed by touching the **GOTO** soft key. Repeated presses of the **GOTO** soft key will scroll through the available information pages.

Use **GOTO** to access a point within the DVD (e.g. select Chapter to display a chapter selection pop-up). Enter a chapter number, then select **ENTER**.

Touch and hold **GOTO** to display DVD status information.

A second long touch will display the previous screen.

Subtitle:

Select to toggle through the available subtitle options. Subtitles will be displayed along the bottom of the screen.

To turn subtitles off, touch and hold the **Subtitle** soft key.

Angle:

Some DVD programs offer alternative viewing angles in selected scenes. Touch the soft key to toggle through the available options.

Audio:

Some DVD programs have alternative or extra sound features, such as a commentary. Touch the soft key to toggle through the available options.

ALTERNATIVE AUDIO SOURCE

While watching a DVD program on a single view display, an alternative audio source can be selected if required (e.g. a radio news station).

Press the **OK** or **MODE** rotary control to display alternative audio sources then rotate to select a source. After 2 seconds, the selected audio source will play and the video source will remain unaffected.

DVD FORMATS AND SCREEN SETTINGS

NTSC (National Television System Committee) is the format used in North America.

PAL (Phase Alternating Line) format is used in the United Kingdom and other countries around the world.

To change the format, select **Settings**. Select the alternative format. After 5 seconds, the screen will return to normal view.

SCREEN APPEARANCE

When you move from the preview screen to full screen, picture format soft keys are displayed. Use to select the viewing area or zoom of the viewed image. If there is no input for five seconds the soft keys will close.

SUPERVISOR SCREEN

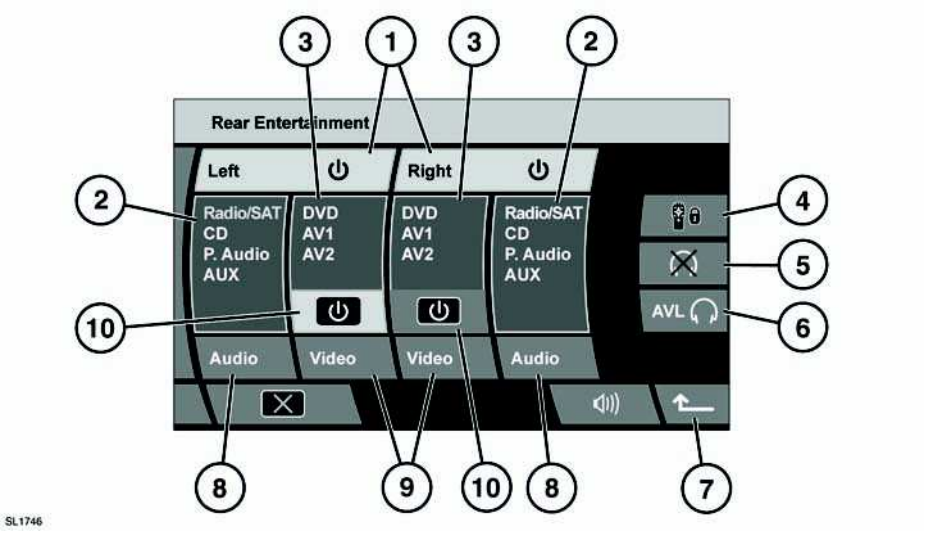

⚠WARNING

Do not adjust the touch screen controls, or allow the system to distract the driver while the vehicle is moving. Driver distraction can lead to accidents, causing serious injury or death.

1. **Left** and **Right** rear screens on/off.
2. Audio source displays.
3. Video source displays.
4. Remote control lockout. Prevents selections being made from the remote control.
5. Headphones mute.
6. **AVL** - Headphones audio volume limiter. Limits headphones volume to 27 decibels.
7. Return to previous screen.
8. **Audio** source selector.
9. **Video** source selector.
10. Video on/off.

Note: *The illustration shows all intended audio and video options.*

INTRODUCTION TO REAR SEAT ENTERTAINMENT (RSE)

The RSE system consists of two screens mounted in the rear of the front seat head restraints. Separate programs can be viewed or heard by rear seat occupants. Supervisory control is made from the front seats. Audio and video programs for each or both sides of the RSE, can be controlled from the Supervisor screen. The RSE remote control can be locked out, headphones can be muted and a volume limit can be set for the headphones.

NOTICE

Always run the engine during prolonged use of the RSE system, otherwise, the vehicle battery may become discharged.

TURNING ON THE RSE

To switch on a rear screen;

1. From the Home menu, select **Rear Entertainment**.
2. From the Supervisor screen, select **Left**, **Right** or both, as required.

Note: *When a rear screen is turned on, the last used audio or video source for that screen will play. If that source is a DVD, then it will resume play at the point it was previously left. If the source is TV and the desired channel is not displayed, use the remote control or the front screen to re-tune.*

NOTICE

Children should be supervised at all times and view/listen to only media suitable for their age group.

To switch off a rear screen completely, select **Left**, **Right** or both again.

To switch off only the video source to a rear screen, touch the appropriate **Video** on/off soft key. The screen will remain backlit ready to display information and messages. Touch the same soft key to turn the screen on again.

CONTROLLING RSE WITH THE SUPERVISOR SCREEN

When the Supervisor screen is displayed, the RSE remote control will be locked out. No part of the RSE will operate, until it is turned on at the Supervisor screen.

Selecting an audio source:

The Supervisor screen will display a choice of audio sources: **Radio**, **Satellite radio**, **CD**, **P.Audio** and **AUX**.

To select an audio source;

1. Touch an **Audio** soft key repeatedly until the highlight moves to the audio type you require.
2. After two seconds without any further selections, the selected audio source will play.

Note: *When watching a video source, an alternative audio source can be selected.*

Selecting a video source:

The Supervisor screen will display a choice of video sources: **DVD**, **AV1** and **AV2**.

To select a video source;

1. Touch a **Video** soft key repeatedly until the highlight moves to the video type you require.
2. After two seconds without any further selections, the selected video source will play.

Note: *When a new video source is selected, the audio source will always be synchronised. However, if an alternative audio source is subsequently selected, synchronisation can be achieved again with a long touch of the relevant* ***Audio*** *soft key.*

Remote control lockout:

The RSE remote control can be locked out, to prevent selections being made.

Touch the RSE lockout soft key. Touch again to reinstate the remote control.

Note: *After an ignition cycle and door lock, the RSE lockout soft key defaults to the off state.*

INFRA RED HEADPHONES

Note: *These infra red headphones are not designed for use by a front seat occupant or outside the vehicle.*



1. **POWER ON-OFF** button
2. **POWER** indicator
3. Headband adjuster
4. **VOL** volume control
5. **CH.A** and **CH.B** channel selectors for left and right screens
6. **Battery cover fixing.** Two AAA batteries required.

Do not use excessive force when adjusting the headband.

Select the appropriate channel to match the left or right screen.

Note: *The earpiece exteriors must remain exposed to the infra red transmitter in the overhead console. Any barrier will prevent them from working correctly.*

When the batteries require replacement the sound quality and volume will be compromised. Remove the battery cover fixing and slide out the cover. Change both batteries with new ones. Refit the cover.

AUXILIARY CONNECTIONS

Rear seat passengers may wish to use such devices as USB, iPod, games consoles, personal audio/ video players, or playback camcorder video.

The two auxiliary input points **AV1** and **AV2** allow for separate external devices to be used or one device can be used by both rear seat passengers.

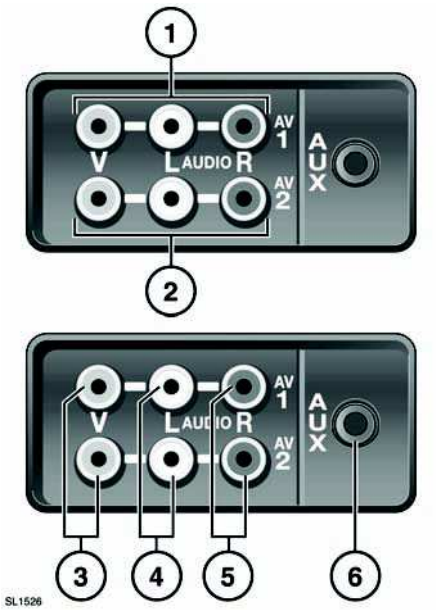

1. AV1.
2. AV2.
3. Video input - Yellow.
4. Audio input - White. Left channel.
5. Audio input - Red. Right channel.
6. AUX socket for 3.5mm jack plug.

To play an audio source connect the White lead for mono or the White and Red leads for stereo. For a video source connect the Yellow lead.

Note: *Video signals will be displayed only on the Video Display Screens mounted in the front seat headrests.*

AUX (Auxiliary Input) mode allows additional equipment to be connected to the vehicle's audio system. Items such as a personal stereo, MP3 player, iPod, hand-held navigation unit etc. can be plugged in to the vehicle's audio system.

Note: *iPod Shuffle is supported when connected via the Auxiliary Input connector.*

USB and iPod connection points are at the front of the vehicle.

⚠WARNING

Loose objects within the passenger compartment can cause death or injury in the event of an accident or sudden braking. Ensure that all auxiliary input devices are securely fixed in position.

NOTICE

Auxiliary input devices may generate heat while operating. Do not place devices on the vehicles upholstery or carpets.

NOTICE

Ensure that any auxiliary input devices are suitable for use within a vehicle before using them.

NOTICE

Any auxiliary input devices that are used will require their own power source or a suitable adapter to use power from your vehicle.

NOTICE

Power supplies, transformers, adapter leads etc. should be fitted professionally to ensure safe operation and avoid damage to the vehicle electrical system.

NOTICE

Auxiliary input devices are not intended for driver use. Do not use if they are likely to cause driver distraction.

TOUCH SCREEN REMOTE CONTROL

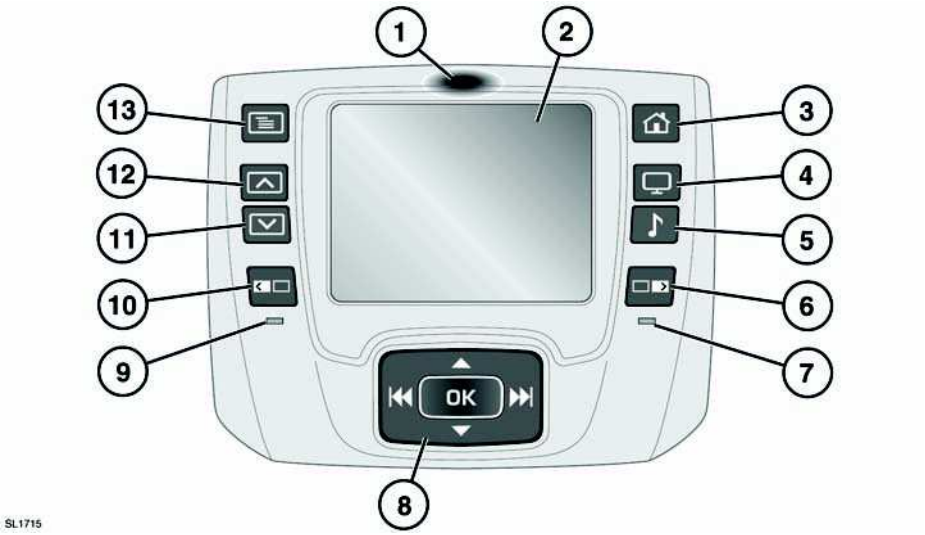

Note: *Hardkeys are the permanent physical buttons on the remote control. Softkeys are those displayed on the touch screen.*

1. Press to unlatch the control from the docking station.

NOTICE

Do not press the touch screen to unlatch the remote control.

2. Touch screen. When a video screen is selected (**6** or **10**), the remote control touch screen becomes active.
3. Use at any time to access the Home menu.
4. Video sources. Use multiple presses to scroll through options.
5. Audio sources. Use multiple presses to scroll through options.
6. Right side video screen. Activates the touch screen to allow control of the right side video screen.
7. Right side tell-tale. Will illuminate when right video screen is selected.
8. Cursor movement and option select control. Hardkey use varies depending on Audio or Video source selection. When in a DVD or CD source the forward and back hardkeys can be held to skip to previous or next chapters or tracks.
9. Left screen tell-tale. Will illuminate when the left screen is selected.
10. Left side video screen. Activates the touch screen to allow control of the left side video screen.
11. Video screen settings - decrease.
12. Video screen settings - increase.
13. Video screen settings. Use multiple presses to scroll through setup options.

Note: *The remote control will not operate if the front supervisor screen is active.*

UNLATCHING THE REMOTE CONTROL

NOTICE

Do not leave the remote control in direct sunlight. Exposure to extreme temperature can cause damage to the battery.

While the control is in the latched position, the battery is being charged.

If the battery level becomes low during use a **Low battery warning** will be displayed.

Note: *The battery is not serviceable. If a replacement battery is required, contact your Land Rover Retailer.*

The control can be used only after removal from the rear seat center armrest.

To remove it from its docked position, first press down at position **1** to unlatch it.

NOTICE

Do not attempt to remove the control before it is unlatched.

Note: *The remote control communicates with the video screen via an infra red link. Therefore, the control must be pointed at the video screen when making a selection.*

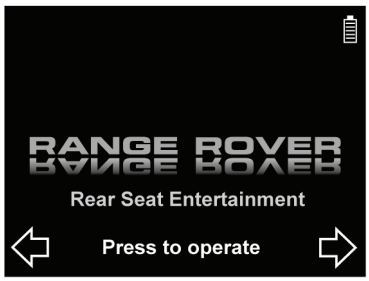

SL1716

The control will display a choice of hardkey presses. Point the control at the relevant video screen and select the left or right video screen hardkey. The **Home** screen is displayed.

Select **Screen ON/OFF** to turn on the video screen.

TOUCH SCREEN HEADER

At the top of the touch screen are several elements to aid use and navigation.

- Title of the currently viewed menu.
- Help icon (**?**). Touch to view a help screen related to the current menu.
- Return icon. Touch to return to the previous menu.
- Battery level indicator. Information only.

HOME MENU OPTIONS

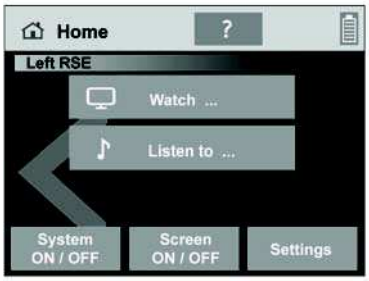

SL1717

Softkey descriptions:

Listen to will display the audio option softkeys.

Watch will display the video option softkeys.

Touch the **System ON/OFF** softkey to shut down completely one side of the rear seat entertainment system. Touch again to turn on.

Touch the Screen ON/OFF softkey to shut down a video screen but still listen to audio. Touch again to turn on.

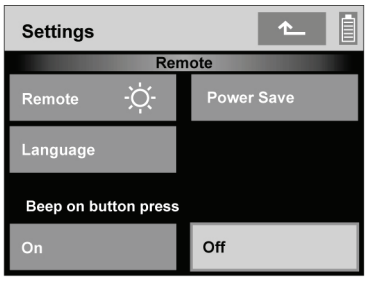

SL1718

Touch the **Settings** softkey to:

- adjust brightness of the remote control touch screen or change to night mode,
- to select a power save time, there are three time options,
- to select the display language,
- and to turn the beep on or off.

Some sub menus will display a version of the following menu control.

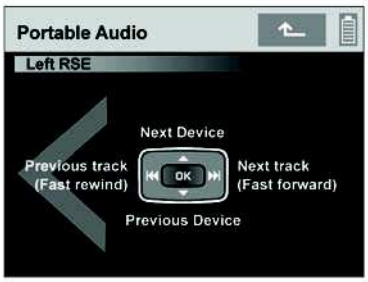

SL1719

This relates to the hardkey control beneath the touch screen. Its use varies depending on Audio or Video source selection.

WATCH MENU

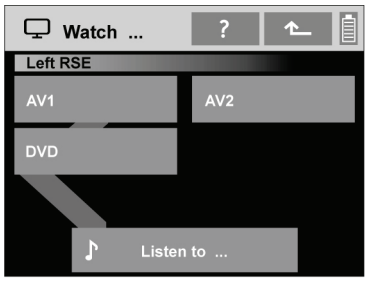

SL1791

Select **AV1** or **AV2** if an audio device is connected via the AV1 or AV2 input sockets. See **AUXILIARY CONNECTIONS** (page 143).

Select **DVD** to move to the **DVD** control menu.

Select **Listen to**, to move to the **Listen to** menu.

DVD MENU

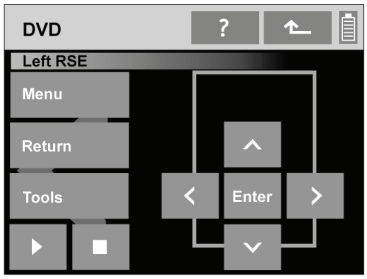

SL1721

Sofkey descriptions:

- **Menu** - displays the DVD menu on the video screen.
- **Return** - displays previous DVD menu on the video screen.
- **Tools** - displays the DVD **Tools** sub menu.
- **Play icon** - plays the DVD.

- **Stop icon** - first press is pre-stop, second press stops the DVD.
- **Menu controls** - moves through the video screen options. Use **Enter** to make a selection.

TOOLS SUB MENU

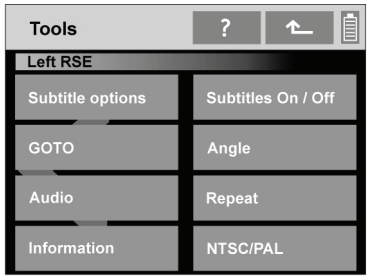

SL1722

When the **Tools** sub menu is displayed, further detail changes can be made to the DVD program. Information can be displayed and the video format can be adjusted to suit the DVD.

LISTEN TO MENU

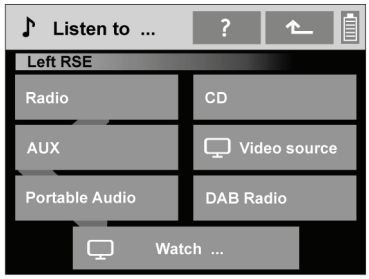

SL1723

Softkey descriptions:

- **Radio** - touch to move to the **Radio** menu. Use the **Band** softkey to move through the available waveband selections. Use the hardkey control to change settings.
- **AUX** - selects the auxiliary audio device connected via the AUX socket.
  See **AUXILIARY CONNECTIONS** (page 143).
- **Portable Audio** - selects the portable audio device connected via the USB or iPod port. Use the hardkey control to change settings.
- **CD** - selects currently loaded CD. Use the hardkey control to change settings.
- **Video source** - select to listen to the audio part only of a video source.
- **DAB radio** - touch to move to the **DAB radio** menu. Use the **Band** softkey to move through the available waveband selections. Use the hardkey control to change settings.
- **Watch** - select to move to the **Watch** menu.

ON-SCREEN INFORMATION

Press hardkey **13** to access the on-screen settings menus.

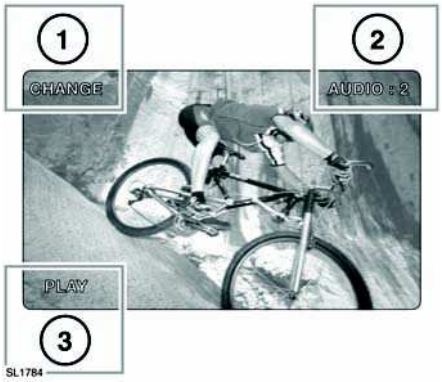

SL1784

1. CD and DVD feedback and information.

2. Invalid command messages and audio channel information.
3. CD and DVD feedback and information.

REAR SCREEN SETTINGS

Access the on-screen menus. Use multiple presses to scroll through setup options.

While the required option is highlighted, the level can be increased or decreased.

Options include:

- BRIGHT (screen brightness).
- COLOR (screen color).
- DIMMER (AUTO, DAY and NIGHT).
  DAY is the brightest setting. NIGHT is the lowest setting.
- DIMMER LEVEL (fine-tune DAY and NIGHT settings).
- DISPLAY MODE (screen aspect ratio can be adjusted to suit the video media being viewed)
- NTSC/PAL (video signal format)

VIDEO SIGNAL FORMAT

When the video format option is highlighted, AUTO is the recommended setting.

NTSC (National Television System Committee) is the format used in North America.

PAL (Phase Alternating Line) format is used in the United Kingdom and other countries around the world.

Reset to defaults screen gives the option of resetting display settings. All on screen display settings will revert to their default settings.

DVD REGION CODES

If a DVD with an incorrect region code is inserted into the DVD player, the message **REGION CODE VIOLATION** will be displayed on the video screens.

Note: *The DVD player will play only discs marked with the region code for the area in which the vehicle was purchased as new, or discs coded for all regions.*

Region Code	Regions
0	All regions
1	USA, US Territories, and Canada
2	Japan, Europe, South Africa, Middle East
3	Southeast Asia, East Asia (Inc. Hong Kong)
4	Australia, New Zealand, Pacific Islands, Central America, Mexico, South America, Caribbean
5	India, Africa, Russia and former USSR countries
6	China
9	Region Free

OPERATION

⚠WARNING

Do not allow the telephone, navigation or touch screen systems to distract the driver while the vehicle is moving. Driver distraction can lead to accidents, causing serious injury or death.

Voice control allows you to operate the telephone, navigation and touch screen systems using spoken commands. A notepad facility also allows you to record notes.

The system is controlled by the Voice button, located on the steering wheel.

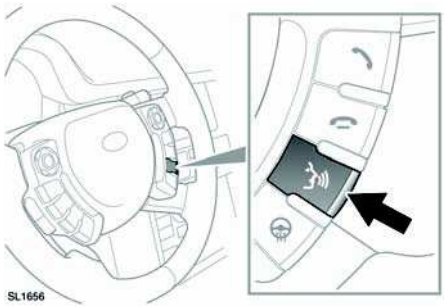

- Press briefly to start a Voice session.
- Press and hold to cancel a Voice session.

Once a Voice session is started, a tone will sound to indicate that the system is waiting for a voice command.

Commands must be given in the language chosen in **Settings/System Settings** area.

Give a command. The system will repeat the command (as understood by the system) as confirmation. The command will then be acted on or the system will ask for further information. Always wait until after the tone before giving the next command.

If a command is not understood by the system, it will respond with **SORRY**. Two further attempts to give the command are permitted before the Voice session is cancelled.

Once you are familiar with operating Voice control, you can skip to the end of a Voice system request (to when the tone sounds) by briefly pressing the Voice button during the system request.

A command can be interrupted by saying **Cancel** or by pressing the steering wheel control.

To cancel a Voice command, press and hold the steering wheel control until a double tone is heard.

The following table lists the basic commands for operating the system (including help and tutorial commands).

Command	Description
VOICE HELP	Plays information on operating the Voice system.
VOICE TUTORIAL	Initiates a four-part Voice system tutorial.
DISPLAY HELP	Plays information on touch screen Voice commands.
DISPLAY ON	Turns on the touch screen.
DISPLAY OFF	Turns off the touch screen.
DISPLAY SHOW PHONE	The Phone menu is displayed on the touch screen.
PHONE HELP	Plays information on phone Voice commands.
DISPLAY SHOW AUDIO	The Audio Home screen is displayed.

Command	Description
DISPLAY SHOW NAVIGATION	The Navigation main menu is displayed on the touch screen (the navigation caution must be accepted beforehand).
NAVIGATION HELP	Plays information on navigation Voice commands.
NOTEPAD HELP	Plays information on notepad commands.
RECORD NOTE	Allows recording of a note, up to 30 seconds long.
PLAY NOTEPAD	Plays all currently stored notes.
CLEAR NOTEPAD	Deletes all currently stored notes.

VOICE TUTORIAL

To listen to a tutorial detailing the operation of the Voice system:

- Briefly press the Voice button to start a voice session.
- Wait for the tone to sound, then say **VOICE TUTORIAL**.

The voice tutorial can be cancelled at any time by briefly pressing the Voice button and saying **CANCEL.** Using the commands **PREVIOUS** and **NEXT** allow you to skip to a previous or the next lesson of the tutorial.

Note: *The vehicle must be stationary and parked during the tutorial.*

VOICE SESSION INTERRUPTIONS

Certain conditions will cause the current voice session to be cancelled, as follows:

- If a phone call is received.
- If a high priority warning appears in the message center.
- If there is no user input for a sustained length of time.

Press the Voice button to start a new voice session.

NOTEPAD

The notepad can be used to record notes, each up to 30 seconds long, which can be subsequently recalled.

RECORDING A NOTE

1. Briefly press the Voice button, wait for the tone to sound, then say **RECORD NOTE**.
2. Speak the note, then press and hold the Voice button to end and save the note.

Note: *If the note exceeds 30 seconds the recording will end automatically.*

PLAYING NOTES

Briefly press the Voice button, wait for the tone to sound, then say **PLAY NOTEPAD**.

If multiple notes are stored; to skip to the next note, briefly press the Voice button during playback and say **NEXT**.

DELETING NOTES

To delete a single note, briefly press the Voice button during playback of the note and say **DELETE**.

To delete all stored notes, briefly press the Voice button and say **CLEAR NOTEPAD**.

VOICE VOLUME

Briefly press the Voice button to initiate a Voice session, then use the volume control to adjust Voice volume as required.

Note: *Voice volume can also be adjusted in the Settings area of the touch screen.*

BLUETOOTH® INFORMATION



Bluetooth® is the name for short-range radio frequency (RF) technology that allows electronic devices to communicate wirelessly with each other.

The Land Rover Bluetooth® system supports Bluetooth® Hands-Free Profile (HFP).

Before use, your cell phone must be paired and docked with the vehicle's Bluetooth® system. This is done via your cell phone. See **PAIRING AND DOCKING USING YOUR CELL PHONE** (page 154).

Once a cell phone has been paired and docked with the vehicle, the system will attempt to connect with the last docked phone each time the ignition is switched on.

As these cell phones have a wide range of audio and echo characteristics, it may take a few seconds for the vehicle's Bluetooth® system to adapt and deliver optimum audio performance.

To get the best performance and minimal echo and noise from the hands-free system, It may be necessary to reduce the in-vehicle volume and ventilation fan speed slightly.

TELEPHONE SAFETY

⚠WARNING

Even when using the Bluetooth hands-free feature, use of your telephone while you are driving is dangerous, as it diverts attention from the traffic situation. If you wish to use your telephone, stop at an appropriate place where you are not endangering or inconveniencing other vehicles.

⚠WARNING

Switch off your telephone in areas with a high explosion risk. This includes filling stations, garages, fuel storage areas or chemical factories, as well as places where the air contains fuel vapour (such as an open vehicle hood), chemicals or metal dust. The telephone could trigger an explosion, or cause a fire.

⚠WARNING

Always stow your mobile phone securely. In an accident, loose items can cause injury.

⚠WARNING

The functioning of cardiac pacemakers or hearing aids may be impaired when the phone is in use. Check with a doctor or manufacturer whether any such devices you or your passengers are using, are sufficiently protected against high-frequency energy.

The Health Industry Manufacturers' Association recommends that a minimum separation of 6in (15cm) is maintained between a wireless phone antenna and a pacemaker, to avoid potential interference with the pacemaker. These recommendations are consistent with the independent research by, and recommendations of, Wireless Technology Research.

TELEPHONE COMPATIBILITY

The Bluetooth® telephone system can be used with an appropriate Bluetooth® equipped cell telephone.

Note: *Some Bluetooth® cell phones are better than others at utilising the full potential of the vehicle's Bluetooth® system.*

Please refer to the Land Rover website at:

http://www.landrover.com/us/en/owners/about/bluetooth.htm

Alternatively, please refer to your Retailer.

Note: *The Bluetooth® equipped phones listed, have been tested for compatibility with Land Rover vehicles. Performance will vary, based on the phone's software version, battery condition, coverage and your network provider. Phones are warranted by their manufacturer, not Land Rover.*

The Bluetooth® system supports Bluetooth® Hands Free Profile 1.5 (HFP 1.5). If the cell phone paired to the system also supports this profile, additional features will be available such as battery meter, signal strength and network operator. If the cell phone does not support these features, they will not be available on the touch screen. However, you can refer to the cell phone's display to determine these items.

PAIRING AND DOCKING USING YOUR CELL PHONE

Note: *The process of pairing and docking your phone with the vehicle using your cell phone, will vary depending on the type of cell phone used.*

1. Switch the ignition system on and ensure that the touch screen is active and that no other phone is currently docked to the vehicle's Bluetooth® system.
2. Using the cell phone, search for Bluetooth® devices. On some phones, this is referred to as a new paired device. See your phone's operating instructions for further information.
3. From the list of discovered devices, select Land Rover.
4. When prompted, enter the Bluetooth® PIN (Personal Identification Number). This will be 2121.
5. Your phone should now pair and dock to the vehicle system. If not, please consult the cell phone's instructions for further information.

Note: *Some cell phones do not automatically dock and will require to be manually docked.*

Some cell phones require you to authorise the connection each time you start the system. To change this, you must set Land Rover as being authorized in the cell phone's known device list. Please consult the cell phone's instructions for further information.

CHANGING THE DOCKED PHONE

Up to 5 cell phones can be paired with the vehicle in the same way. However, only one can be docked at any one time.

If the vehicle system automatically docks to another Bluetooth® device, turn off the Bluetooth® activation facility of that device.

If the maximum number of telephones are already paired to the system, a message will be displayed and you are given the option to remove one. This must be carried out before a new telephone can be paired.

TELEPHONE MENU

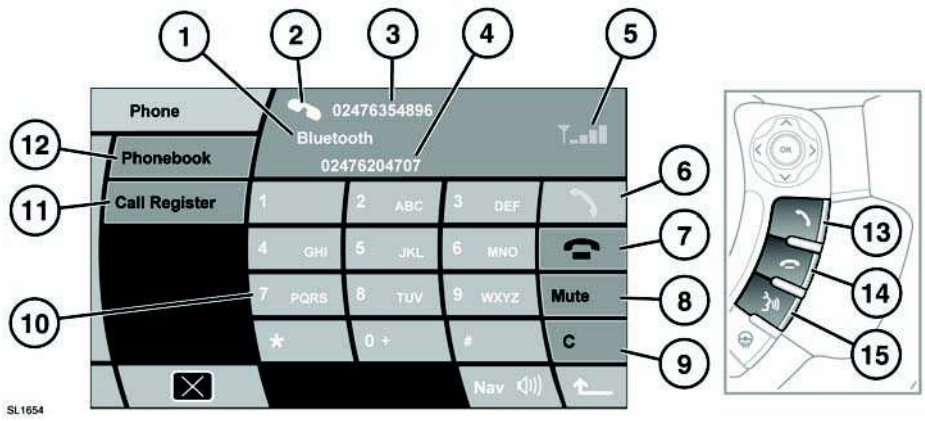

⚠WARNING

Do not adjust the touch screen controls, or allow the system to distract the driver while the vehicle is moving. Driver distraction can lead to accidents, causing serious injury or death.

1. Network name. Bluetooth is displayed if no network is available.
2. Active call icon.
3. Call information.
4. Scratchpad line. Record a phone number during a call.
5. Signal strength indicator.
6. Connect icon. Use to make or answer a call.
7. Disconnect icon. Use to end or reject a call.
8. **Mute**. Touch to mute the call.
9. **C**. Brief touch to clear the last number. Touch and hold to delete complete number.
10. Numeric keypad.
11. **Call Register**. Lists all phone messages.
12. **Phonebook**. Select to access the Phonebook.
13. Press connect icon to make or answer a call.
14. Press disconnect icon to end or reject a call.
15. Voice control.

CALL VOLUME

The phone call volume is operated by the audio system's volume control.

If the audio system is in use when a phone call is active, the audio source is suppressed for the duration of the call. Navigation instructions and parking aid warnings are not suppressed.

LAST NUMBER REDIAL

If your cell phone supports this feature, it will be available on screen.

1. Touch a connect icon.
2. The last dialled number will be displayed and dialling will commence.

DIGIT DIAL

Using the on-screen keypad, enter the required number. Up to 20 digits are acknowledged. If more numbers are entered, an error message will be displayed. Touch a connect icon to send.

Note: *When entering a number, you can change the phone number shown on the touch screen using the* ***C*** *button. A momentary touch erases a single digit, a long touch erases the complete number.*

INCOMING CALLS

When a new call is incoming and the Phone display is not active, an information pop-up will appear. Touch a connect icon to receive the call.

To reject the call, touch a disconnect icon.

SCRATCHPAD

This function allows a number to be entered during an active phone call. After ending the call, the scratchpad number will move up to the top area of the screen.

To dial that number, touch the Connect icon or use the **C** soft key to delete it.

CONTINUING A CALL WITH IGNITION OFF

If you need to turn off the ignition during a telephone conversation, there are two choices of how to continue the telephone call.

1. If you want to continue using the vehicle telephone system, ensure that the audio system is ON before turning off the ignition.

   The vehicle telephone system will continue to be available while the current phone call is active. When the phone call is terminated the vehicle system will shut down.
2. If you want to continue the phone call using your cell phone, ensure that the audio system is turned OFF before turning off the ignition.

PHONEBOOK

Certain cell phones store phonebook contacts in two different areas, on the SIM card and on the phone memory. Where possible, the vehicle will download and display contacts from both areas.

When a phone is removed from the vehicle and the Bluetooth link is broken, the phonebook will be deleted from the vehicle system.

To access the phonebook:

1. Select the **Phone** menu.
2. Select **Phonebook**.
3. The phonebook screen is displayed.

There are 2 methods to access contacts from the phonebook, via the scroll list or via the search feature:

Method 1 - using the scroll feature:



SL1607

1. Use the up/down scroll arrows to view the contacts list.
2. Contact names and numbers are displayed alongside a connect icon.
3. When the required contact is displayed, touch a connect icon.

Alternatively, use the search controls on the steering wheel.

Method 2 - using the search feature:



1. Use the keyboard to enter the contact name. If an error is made, use the **Delete** soft key.
2. When the required contact is displayed, touch a connect icon.

CALL REGISTER

In this area you can view lists of phone messages, details of previous calls, missed calls and received calls.

A call can be made to any of the contacts within the different areas of the call register. Touch the icon corresponding to the contact you want to call. If a call is made the display reverts to Phone mode.

Note: *These functions will be available only if your phone is capable of sending the call lists to the vehicle.*

Accessing phone messages:

1. Touch the **Call Register** soft key.
2. The Phone Messages menu is displayed.

Accessing previously dialled numbers:

1. Touch the **Call Register** soft key.
2. The Phone Messages menu is displayed.
3. Touch the **Dialled** soft key.
4. The Last Dialled menu is displayed.

Accessing missed calls:

1. Touch the **Call Register** soft key.
2. The Phone Messages menu is displayed.
3. Touch the **Missed** soft key.
4. The **Missed** menu is displayed.

If a call is missed while the Phone menu is displayed, touch the **Call Register** soft key to access caller information.

If a call is missed while in another display mode, an information pop-up will appear with a **View List** option. Select **View List** to display the missed call(s).

Accessing previously received numbers:

1. Touch the **Call Register** soft key.
2. The Phone Messages menu is displayed.
3. Touch the **Received** soft key.
4. The **Received** menu is displayed.

TELEPHONE VOICE CONTROL

⚠WARNING

Do not use voice control when placing emergency calls. Your voice and tone could be affected by the stressful situations as a result of which the process of establishing the telephone connection could be unnecessarily delayed.

Press and release the voice button on the steering wheel. After the tone, speak one of the commands. If the system asks for more information, wait until the tone has sounded before replying.

To cancel a voice control session, press and hold the voice button until a double tone sounds.

TELEPHONE VOICE COMMANDS

The voice control system understands predefined commands, which need to be spoken word for word. For each of the following commands, **phone** can be substituted by **telephone**.

- PHONE DIAL NUMBER.
- PHONE DIAL NAME.
- PHONE REDIAL.
- PHONE STORE NAME.
- PHONE PLAY DIRECTORY.
- PHONE DELETE DIRECTORY.
- PHONE HELP.

When using these commands, the system will guide you through the process. After each prompt for a response, wait for the tone before responding. Some responses are a simple **YES** or **NO**.

When using the **PHONE DIAL NUMBER** command, the phone number can be given as a series of single digits from zero to nine. You can also speak the number in groups of three to six digits. If you use this method, always wait for the system to respond with **CONTINUE** before providing the next group of numbers.

When making a call to another country, start the number with the command **PLUS**, then start the number with the country code.

When prompted with the **CONTINUE** message, the following commands are available to use.

- **DELETE** - Deletes all digits entered.
- **CORRECTION** - Deletes the last entered digit.
- **CANCEL** - Cancels dialogue.
- **DIAL** - Dials the entered number.

The **PHONE REDIA**L command can be used to dial the last number used.

TELEPHONE VOICE NAMETAGS

The voice control system allows you to enter nametags against telephone numbers.

To store a nametag, use the command **PHONE STORE NAME** and follow the prompts to enter the number and your nametag.

When prompted with the Continue message, the following commands are available to use.

- **DELETE** - Deletes all digits entered.
- **CORRECTION** - Deletes the last entered digit.
- **CANCEL** - Cancels dialogue.
- **STORE** - Stores the entered number.

To dial a number stored under a nametag, use the command **PHONE DIAL NAME and follow the prompts**.

To play all the nametags stored in the directory, use the command **PHONE PLAY DIRECTORY**. The list can be interrupted at any time by using the following commands.

- **DELETE** - Deletes a nametag and associated telephone number.
- **DIAL** - Dials the number associated to the nametag.
- **REPLAY** - Replays the nametag list.
- **CANCEL** - Cancels playback.
- **EDIT** - To edit the nametag or associated telephone number.

To delete all entries in the vehicle voice recognition phone directory, use the command **PHONE DELETE DIRECTORY** and follow the prompts. You will be asked twice to confirm deletion.

The contacts and numbers deleted are only those copied to the vehicle directory. This process cannot delete the directory stored on the cell phone.

ADDING A NEW NUMBER AND NAMETAG

A new contact can be stored via the touch screen.

1. From the Home menu, select **Settings**.
2. Select **Voice Settings**.
3. Select **Voice Add Name**.
4. Using the keypad, enter the telephone number.
5. Select **Add** to initiate the voice recognition **PHONE STORE NAME** function.
6. Follow the prompts to add a nametag.

THINGS YOU NEED TO KNOW

⚠WARNING

Do not adjust the touch screen controls, or allow the system to distract the driver while the vehicle is moving. Driver distraction can lead to accidents, causing serious injury or death.

The requirements of national Road Traffic Regulations always apply.

Observation of traffic signs and local traffic regulations always take priority.

The navigation system serves solely as an aid to navigation. In particular, the navigation system cannot be used as an aid to orientation when visibility is poor.

The navigation system uses signals from Global Positioning System (GPS) satellites combined with information from data stored on the vehicle hard drive, to establish the true vehicle position.

GPS signals may occasionally be interrupted due to physical barriers such as tunnels and roads under raised highways.

However, direction and speed sensors on the vehicle will minimise any adverse effect on the navigation system. Normal operation will resume once the obstruction has been passed.

NAVIGATION ON-THE-GO

All features of the navigation system can be operated when the vehicle is moving.

⚠WARNING

In the interests of road safety, only operate, adjust or view the system when it is safe to do so. Do not allow the system to distract the driver while the vehicle is moving. Driver distraction can lead to accidents causing serious injury or death.

VEHICLE POSITION ERROR

Under certain conditions it is possible for the vehicle position shown on screen to be incorrect. This may happen when:

- Driving on a spiral ramp in a building.
- Driving on or beneath elevated roads.
- Two roads are close and parallel.
- The vehicle is transported to another destination.
- After the vehicle is rotated on a turntable.
- After vehicle battery disconnection.

If the vehicle position is incorrect, apply the Calibration procedure. See **VEHICLE POSITION CALIBRATION** (page 161).

ACCESSING NAVIGATION

To turn on the navigation system touch the **Navigation** soft key. Alternatively press the **NAVIGATION** hard key on the facia.

If the navigation screen language has not been set, now is the time to set it. Select **Language**, make a selection and confirm it by touching the **OK** soft key. You will be returned to the **CAUTION** screen.

After touching the **Agree** soft key, the touch screen will display the main **Menu** or the screen that was in use when you last switched off the system.

Note: *After approximately 12 seconds, the menu soft keys will disappear and display the map information only. This will show current vehicle position. Touch the* ***Menu*** *soft key to display the full* **Menu** *screen.*

At this point, the first time user should set up personal preferences in the **Navigation Setup** area. These settings are applied whenever navigation is used.

PERSONAL PREFERENCES

Select **Navigation Setup** from the main menu. Changes made here will affect only the navigation system.

The following parameters may be configured:

- **User Settings**. Scroll to view all options. Set as required.
- **Quick POI Selection**. Points of interest icons may be added or removed from the map screen.
- **Calibration**.The vehicle position can be set.
- **Restore Defaults**. Reset to factory defaults.
- **2D/3D View**. Both the map view and guidance view can be toggled between 2D and 3D views.
- **RBDS-TMC**. Traffic information settings.

Note: Map Change *is for Retailer use only when a navigation hard drive update is required.*

VEHICLE POSITION CALIBRATION

To set vehicle position:

1. Select **Navigation Setup** then **Calibration**.
2. Select **Position/Direction**. This will display the approximate position of the vehicle.
3. Use the arrow icons to move the pointer to the exact position. Use the zoom feature if necessary.
4. Touch the **OK** soft key.
5. Now use the arrows to align the vehicle with the map direction.
6. Touch the **OK** soft key.

VOICE GUIDANCE

When the navigation voice is in use, its volume can be adjusted to suit personal preference.

1. Press and hold the Tone hard key. The Volume menu will be displayed.
2. Select **NAV** to display a bar graph.
3. Use the + and - soft keys to adjust navigation voice volume.

After 10 seconds the screen will revert to the previous view.

NAVIGATION SCREEN OVERVIEW

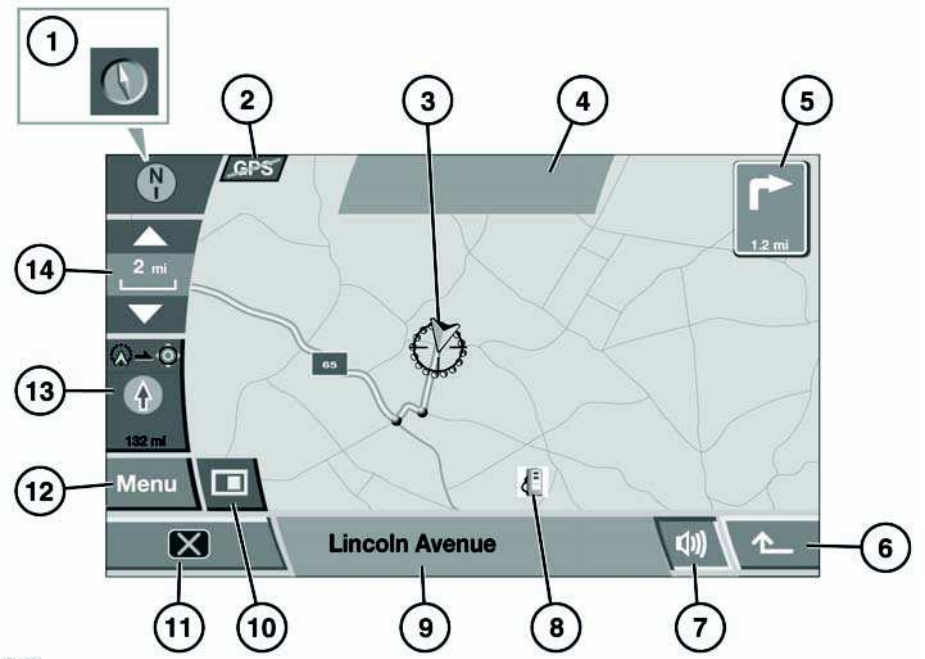

⚠WARNING

Do not adjust the touch screen controls, or allow the system to distract the driver while the vehicle is moving. Driver distraction can lead to accidents, causing serious injury or death.

1. Map direction control. This icon controls the orientation of the map. Touch to toggle between North is up on the map, or direction of vehicle travel is up.
2. GPS (Global Positioning System) strike through - no signal from satellites.
3. Vehicle position icon. When **North is up** is selected, this icon will follow the direction of vehicle travel.
4. Message display area.
5. Distance to next turn.
6. Return to previous screen soft key.
7. Repeat last voice instruction soft key.
8. Point of Interest (POI). Fuel station icon is shown in the example.
9. Current street location.
10. Display screen mode options soft key.
11. Screen off soft key.
12. Return to the navigation menu soft key.
13. Straight line direction and distance to destination. When a number is shown at top right of the icon, this is the distance to the next way point.
14. Zoom control soft key.

SCREEN MODE OPTIONS

Touch the screen mode options soft key to display the possible options. Touch the relevant icon to change the screen mode:


Show full screen


Show the split screen. A more detailed view of the local area and road system is displayed in the right side of the screen.


Show the compass. Compass can be set as 'north is up' or 'vehicle is up'


List of forthcoming junctions and turn directions shown on the split screen


This icon displays enlarged next junction guidance info on the split screen


This facility is only available when travelling on the highway and displays the remaining highway exits (up to your required exit) and the exit numbers


Automatically shows the next junction on the right of the screen.

ENTERING A DESTINATION

From the navigation menu, select **Destination Entry**.

If you are travelling to another country on your journey, it is advisable to change the destination search using the **Search Area** soft key prior to entering your destination. This will reduce the time taken to calculate a route.

There are several methods for entering a destination. With each method you can select from a list of route preferences, choose alternative routes and add intermediate points to your journey.

The following destination entry options are available, all are selected by touching the appropriate soft key:

- **Address:** This allows you to enter a specific street address, street or town.
- **Point of Interest (POI):** This allows selection of a destination from the POI categories.
- **Emergency:** Guides you to the closest Police Station, Hospital or Land Rover Retailer.
- **Map:** A destination can be selected by pinpointing on a map.
- **Coordinates:** The destination is entered as longitude and latitude coordinates.
- **Memory:** Up to 106 destination locations can be stored in the system memory.
- **Previous:** The previous 20 destinations are stored for future use, and one of them may be selected using this option.
- **Highway Entry/Exit:** Enables selection of a highway junction as a destination.
- **Home:** Can be used to store a frequently used location.
- **Off-road Point:** This allows a destination used in off-road navigation to be selected as a destination.

ENTERING AN ADDRESS AS A DESTINATION

Select **Address**, then **Town Name** and enter the name of the town on the keyboard. Next, enter the **Street** using the soft key, then House Number (if known).

When an entry is made (in **Street** or **Town Name**), if the system recognises enough letters, a list of matching options from the database will be displayed. Select the required street or town by touching it.

Once the address has been entered, touch the **OK** soft key. A map of the destination will be displayed overlaid with fine tune arrows.

To fine tune the destination, touch the required arrow on the screen. When you are ready to calculate a route, touch the **Destination** soft key.

A route will be calculated and a map overview of the route displayed. The destination is identified by a red circle containing a white ring.

If satisfied with the destination and route displayed, touch the **Start** soft key begin your journey. Your route will be highlighted on the map, with an arrow depicting your current location. Voice guidance instructions will guide you along the route.

ENTERING A POINT OF INTEREST (POI) AS A DESTINATION

Select the **POI** soft key, followed by a **POI Name**. Use the keyboard to enter a place name to display any related locations on the map.

Touch the **Categ** soft key to view a list of the POI categories, or touch the **List** soft key to view a alphabetical list of available POIs in all categories.

POI entry may also be made using the **POI Near** or **Phone Number** options.

Note: *POI icons can only be displayed up to the 1/2 mile (1km) zoom level.*

When a suitable POI has been selected, touch the **Destination** key to begin route calculation.

A confirmation screen will be displayed, followed by the map screen with the destination identified by a red circle containing a white ring.

If satisfied with the destination and route displayed, touch the **Start** soft key begin your journey. Your route will be highlighted on the map, with an arrow depicting your current location. Voice guidance instructions will guide you along the route.

ENTERING AN EMERGENCY DESTINATION

Select the Emergency option and choose an option. The system will calculate a route to that option. Touch **Start** to begin guidance.

ENTERING A DESTINATION USING THE MAP

If a destination is in the general location of your vehicle, entry via the map may be used.

Select **Map** from the **Destination** menu. The local area will be displayed as a map overlaid with fine tune arrows. Using the **Zoom** function and the fine tune arrows, position the destination arrow over your required destination and select **Destination**.

The navigation system will calculate your route and display it on the screen. To start your journey, select **Start**.

ENTERING A DESTINATION USING COORDINATES

To navigate to a latitude/longitude destination, select **Coordinates**. Enter the coordinates using the numeric keypad.

Note: *The full latitude must be entered first, followed by the longitude.*

Once the coordinates have been entered (using the appropriate symbols for degrees, minutes, seconds as required) select **OK**. The system will calculate the route and display on the map.

Note: *If the coordinates entered are not within the area covered by the navigation system, a error message will be displayed. This may also occur if the coordinates are entered incorrectly.*

RECALLING A DESTINATION FROM THE MEMORY

Over time it is possible to build up a list of stored destinations. Information such as location name, the name of a person or a telephone number can be stored alongside each destination.

Select **Memory** from the **Destination** screen. The **Memory Points** menu is displayed with a list of any stored memory points. Use the arrow soft keys to scroll through the list. Touch a destination to select it. The details will be displayed as a confirmation. Select **Destination** to confirm and select.

The navigation system will calculate the route and display it on the map.

Note: *While driving, scrolling on the destination list will be disabled and you will only be able to select from the destinations visible at the top of the list.*

RECALLING A PREVIOUS DESTINATION

To recall one of the previous 20 destinations, select **Previous**. A list of the stored destinations is displayed. Touch the desired destination to select it. The details will be displayed as confirmation, select **Destination** to confirm.

The navigation system will calculate the route and display it on the map.

Note: *While driving, scrolling on the destination list will be disabled and you will only be able to select from the destinations visible at the top of the list.*

RECALLING A HIGHWAY JUNCTION AS A DESTINATION

Highway junctions must be previously stored before they may be entered as a destination. The highways are also stored as memory points. See **STORING NEW LOCATIONS** (page 168).

Select **Freeway Entry/Exit** to display a list of stored junctions and select your desired destination by touching it. The details will be displayed as confirmation, select **Destination** to confirm.

The navigation system will calculate the route and display it on the map.

Note: *While driving, scrolling on the destination list will be disabled and you will only be able to select from the destinations visible at the top of the list.*

RECALLING HOME AS A DESTINATION

Once a Home destination is stored (see **168, STORING NEW LOCATIONS**), it can be easily recalled.

Select **Home**, followed by **OK** to confirm. The navigation system will calculate the route and display it on the map. Select **Start** to begin your journey.

RECALLING AN OFF-ROAD POINT

If an off-road route has already been stored, it can be recalled and used as a new destination.

Select **Off-Road Point** and a list of stored routes will be displayed. Up to 20 off-road routes can be stored. See **STORING NEW LOCATIONS** (page 168). Select the desired route from the list, and touch to select.The details will be displayed as confirmation, select **Destination** to confirm. The navigation system will calculate the route and display it on the map. Select **Start** to begin your journey.

Note: *While driving, scrolling on the destination list will be disabled and you will only be able to select from the destinations visible at the top of the list.*

MAKING CHANGES TO A ROUTE

The route calculated by the navigation system may not exactly fit the requirements of a particular journey. A choice of options are provided which may be selected to tailor the route, these include:

- Specific road types.
- Vehicle transport types.
- A choice of routes.
- A facility to add additional points along the route.

Each of the options is accessed via a soft key when they become available.

ROUTE PREFERENCES

With each of the destination entry methods described, a map screen appears when the route is selected, showing the fine tune arrows and the selected route. Also on this screen, to the right, is the **Route Prefs** soft key.

This soft key allows selection of a number of options available on the selected route. Options include:

- Ferry.
- Toll roads.
- Major roads.
- Restricted roads.
- Trains.

The arrow soft keys allow scrolling through the list. To select an option touch the appropriate soft key, and then select **OK** to confirm. The navigation system will then recalculate the route according to the option selected and continue in the normal way.

The **Route Preferences** menu may also be accessed via the main navigation Menu. From here, select **Route Options**, followed by **Route Preferences**.

SELECTING ALTERNATIVE ROUTES

While setting a destination, the map screen is displayed showing the suggested route that the navigation system has calculated. To see available alternate routes, select **3 Route** at the bottom of the screen. Up to 3 alternate route options will then be displayed on the right hand side of the screen.

To select one of the alternate routes, touch the appropriate information box. The navigation system will then continue in the normal way with the newly selected route.

ADDING WAYPOINTS TO A ROUTE

Additional points added to a route are called waypoints. Up to 5 waypoints can be added to a journey. To add a waypoint, prior to selecting **Start** (to begin the journey), select **Change Route** (located at the bottom of the screen). The **Route Options** screen will be displayed.

Select **Destination/Waypoint**, then select **Add**. The Destinations menu will be displayed, and waypoint destinations may be added in the same way as the original destination.

Once a waypoint has been added, and the map screen is reached, select **Waypoint** to confirm.

The system will then return to the Route Options menu, where further waypoints may be added if desired. To add a waypoint between two other waypoints, touch the **Add** soft key between them. When all waypoints have been added, select **Calculate** to calculate the route. When ready to begin the journey, select **Start**.

Waypoints may be added at any point in the journey by selecting **Waypoint** and following the above procedure.

CHANGING THE ORDER OF WAYPOINTS

To change the order of waypoints, select **Waypoint**, then select **Edit**. A list of waypoints in the current journey will be displayed. Select **Change Location** and it will change to **Change Order**. Touch the soft key again to highlight it, and then touch the waypoints in the order you would like to visit them. The order number will be displayed to the right of each waypoint. When satisfied with the new order, select **OK** to confirm. The new route will then be calculated. Numbers will be displayed next to Waypoints on the map to indicate their order in the journey. When ready to begin the journey, select **Start**.

PREVIEWING THE ROUTE

From the **Route Options** menu, it is possible to preview the chosen route, turn by turn.

A list of roads can be displayed, giving the opportunity to add road avoidance requests (if desired). From the **Route Options** menu, select **Route Preview**. A map is displayed, showing the current vehicle location. At the base of the screen, is a set of soft keys allowing you to play through the route as required.


Start preview playback


Jump to the next way point or destination


Fast forward through the preview (only available during playback)


Pause the preview playback


Preview the route in reverse, starting with the destination


Jump back to the start point


Fast reverse through the preview (only available during playback)

Note: *If waypoints are included in the route, the preview will pause at each waypoint. To continue the preview, touch the appropriate preview control soft key.*

VIEWING POINTS OF INTEREST (POI) IN PREVIEW MODE

While in preview mode, it is possible to view points of interest along the route. Select **Edit** (on the right of the preview) to display the Edit Route Preview options.

A list of selected POIs is displayed (e.g. gas stations, restaurants, hotels, etc.). If the POI category required is not displayed, select **Other** to display a full list. Once a POI category has been selected, select **OK** to confirm.

Note: *The Route Preview edit menu also allows other playback settings to be altered to the users preferred settings.*

WHOLE ROUTE PREVIEW AND TURN LIST

To preview the entire route, from the **Route Options** menu, select **Display Route**. A start to finish preview of the entire route will be displayed.

A list of all the roads on the route, their designations, distance between turns, and the type of junction or turn will be displayed.

Select **Turn List** to display a list of all the roads on the route (it may be necessary to use the scroll soft keys to view the full list).

To avoid a particular road on the list, select **Street Avoid** to display a list of road names. Touch a street on the list to avoid it, then select **Yes** to confirm. To cancel a street avoid request once entered, touch the highlighted street name a second time.

When satisfied with all choices select **Re-route** to calculate the new route, then select **Start**.

STORING NEW LOCATIONS

To store a location, from the Navigation menu, select **Stored Locations**.

A number of different locations may be stored within the navigations system (e.g. a place of work, a road junction, a favorite restaurant or an area to avoid).

Up to 106 locations may be stored for future use, and six of those may be linked to the **Home** and 1-5 preset location soft keys at the bottom of the screen.

To add a location, select **Memory Points**, then select **Add**. The Store Memory Points page is displayed.

In this example, the M69 highway exit onto the A5 major road will be stored. Select **Freeway Entry/Exit** to display the keyboard screen.

Add the highway letter **M** on the keyboard, then select **0-9** to bring up the numeric keyboard, and enter the highway number (e.g. **69**). Select **M69** from the list to select it. Select **Exit** and a list of highway exits on the M69 is displayed.

Use the arrow soft keys to scroll through the list and select **A5**.

A map screen is displayed with the fine tune arrows present. If required, fine tune the destination with the arrows and when satisfied, select **OK**.

The screen will return to the **Memory Points** menu. Before saving the location, further information can be added to the location, as follows:

- **Attribute:**

  To add an attribute to the memory point, touch the attribute soft key.

  This allows the memory point to be designated as your home address or some other memorable location, and remembered as one of the preset soft keys.

  To set as a home address, touch the **Home** icon soft key at the top of the page.

  Note: *It is highly recommended that your actual home address is not stored as a memory point, but a point near to your home is stored. This prevents a thief locating your home in the event that the keys and vehicle are stolen.*

  To set as one of the 5 preset keys described, touch a blank 1-5 soft key and enter a name for the memory point on the next screen. Then select **OK**.

  If all the presets have memory points stored to them, go back to the **Memory Points** menu and delete one of the existing preset memory points using the **Delete** soft key.

- **Name:**

  To add a name to a memory point, select **Name**. Enter the name using the keyboard and select **OK** to confirm.

  Note: *To change the name, you must first delete the entry.*

  The name can be displayed on the navigation map by selecting **Show Name** on the **Memory Points** menu.

- **Location:**

  The location of the memory point may be fine tuned using the location soft key. This will bring up the fine tune map screen with the fine tune arrows. Use this screen to alter the location, and when satisfied, select **OK** to confirm.

- **Icon:**

  An icon and a sound bite may be added to the memory point using this soft key. If an icon is attached, it will be displayed on screen maps if it is within the display area.

  Any attached sound bite will be replayed as you approach the memory point.

  On touching the **Icon** soft key, a menu will appear giving a choice of icons to attach. Select an icon or, if no suitable icon is present, select **No icon**.

  To add a sound bite, select **With Sound**. Select a sound icon, then touch the **Play** icon to record the sound.

Once all additional information has been stored, select **OK** to confirm.

The display will return to the **Memory Points** menu, which can be selected for editing. When satisfied, select **Return** (bottom right hand corner of the screen) to return to the main **Memory Points** menu.

From this menu, memory points may be added to the other categories:

- Address.
- POI.
- Map.
- Coordinates.
- Memory.
- Previous.
- Home.

The process used for adding memory points to the other categories is the same as that described above.

EDITING A MEMORY POINT

To edit a memory point, select **Edit** from the **Memory Points** menu.

Select the memory point to edit and edit using the same process as entering a new memory point.

DELETING A MEMORY POINT

To delete a memory point, select **Delete** from the **Memory Points** menu. Select the memory point you wish to delete by touching it. A confirmation screen will be displayed, select **Yes** to confirm. The display will return to the Memory Points menu.

To delete all memory points, select **Delete All** on the delete screen.

AVOID POINTS

Once a route has been selected, a single or a series of avoid points may be selected.

Once the avoid points are entered, the system will recalculate the route to avoid them.

To add avoid points, select **Avoid Points** and select **Add**. A destination screen is displayed, allowing a number of options for adding avoid points.

When the fine tune map screen is reached, use the arrows and zoom soft key to fine-tune your selection in the normal way. When satisfied, select **OK**.

The following screen allows the size of the avoided area to be set, use the **Reduce** and **Enlarge** soft keys to set the size of the area, and when finished, select **OK**.

A confirmation screen will be displayed and the area stored to the memory.

From the Avoid Points menu, the **Edit** and **Delete** soft keys can be used to adjust or remove an avoid point.

STORING A HOME LOCATION

NOTICE

When storing a home location, it is advisable to store an alternative location close to your home address. This is to avoid giving away your home address should the keys and vehicle be stolen.

The Home function allows a stored destination used frequently to be selected quickly and easily. Only one destination can be allocated as home.

From the **Stored Locations** menu select **HOME**, then select **Add**.

Note: *Select **Edit** to edit the details of the existing stored location, and select Delete to remove the existing stored location.*

Enter the home destination in the same as other destinations, adding attributes etc as desired.

POINTS OF INTEREST

To make selection easier, POIs are categorised into several different types or groups. Some POI groups also contain subgroups.

Any of the POIs can be selected as a destination or added to your route as a waypoint. An icon will be displayed on your route map next to any POIs that you add.

To cancel the display of a POI icon, touch the map screen display additional soft keys. Touch the **POI** soft key at the bottom of the screen to access the Quick POI Menu and select **POI Off**.

POI CATEGORIES AND SUB-CATEGORIES

The system has 8 main POI categories (listed below). When a category is selected from the **POI Category** screen, the navigation system will display the first 4 choices of that category in alphabetical order. Each category is accompanied by an icon for visual reference.

To list all options in a category, touch the **More** soft key, and select a category to view all available options.

Only POIs in the current search area will be displayed, except for the sub-categories marked **All Search Areas** in the POI category list.

CATEGORY LIST



Restaurants



Automotive



Leisure



Travel



Shopping



Hotel



Community



Others

CREATING A QUICK POI ICON

Quick POIs are frequently used POIs that are stored in a special quick access list. This allows them to be quickly selected when required. Up to 5 POIs may be stored.

To store a quick POI:

1. From the map guidance screen, touch anywhere on the map.
2. Touch the **POI** soft key at the bottom of the screen.

   Note: *The POI soft key is only available if the zoom level is less than 1/2 mile (1km).*
3. Select the required category. If the category you require is not displayed, touch the **More** soft key to view all categories.
4. If required, scroll through the list to locate the required category, and touch it to highlight.
5. Repeat for other POIs you wish to add (up to 5), then touch **OK** to confirm.

SELECTING A QUICK POI AS A DESTINATION

During a journey, touch the **POI** soft key at the bottom of the screen, and then touch the required **Quick POI** icon.

CHANGING A QUICK POI ICON TO A NEW POI

To change one of the stored quick POI icons to a different POI:

1. Access the **Quick POI** screen, and select the one to be changed.
2. Touch the **Delete** soft key to remove it.
3. Select the new category you would like to add and select **OK**.

OFF ROAD NAVIGATION

If available, access the **Off Road Navigation Menu** by touching **Destination Entry**, then **Off Road Point**.

Off road navigation maps are similar to the on-road maps but have additional features and information, such as a large compass display, heading, altitude, latitude and longitude etc.

When switching to off road navigation mode during on-road guidance, the current highlighted route will be removed from the map and on-road guidance will be suspended.

Way points and destination icons will remain displayed. The destination is marked with a double circle.

When exiting off road guidance, the system recalculates the route and reverts to on-road guidance.

NEW ROUTE

From the off road navigation main menu, the **New Route** soft key allows the following route entry methods:

- Map.
- Previous.
- Memory.
- Distance and Bearing.
- Coordinates.
- Off Road Points.

Entering destinations is achieved using the same methods as on-road navigation mode.

LOAD ROUTE

Load route allows a previously stored off road route to be recalled in the same manner as on-road stored route. Touching the **Load Route** soft key will bring up a list of stored routes, touch the desired route to select. When loading a route, the current vehicle location is stored as the starting point, shown as the letter **S** on the map screen.

ROUTE OPTIONS

The **Route Options** soft key allows access to the following commands:

- **Edit Route**

  These menu items are identical in operation to the On Road menus.

  A maximum of 20 off-road routes can be stored. When the maximum is reached the **New Route** soft key will no longer be active.
- **Cancel Route**:
  Allows a selected route to be cancelled. Touch the soft key to cancel guidance. All waypoints and icons will be removed.
- **Display whole route**:
  The whole route can be displayed during guidance mode. It shows the total mileage of each section and updates as the vehicle position changes.

  A backward or return route can be made at any time. All way point icons of the original route are reset and the system draws straight lines between them.

  The original start point is now designated as the destination point and way points are numbered in countdown order.
- **Display way point list**:
  Off road navigation way points are shown in numerical order. The nearest way point is the last in the list. A maximum of 35 way points can be stored.

  During a forward route, the way point with the smaller number is nearest on the guidance display. During a backward or return route the smaller number is furthest away.

  The bearing (e.g. R170) and distance (e.g. 1 mile) is a reference to the next way point. The bearing is the angle between the previous heading and the next way point. The displayed information is continuously updated.

  While the list is shown, if the destination is reached, the system first changes to the map screen and then shows the pop-up for arrival at destination.
- **Skip Way point**:
  While on a route this soft key can be selected to skip the next way point. Guidance will then be given to the following way point.
- **Trace Points**:
  If **Current Trace Point** is selected via **Route Options**, trace point icons are automatically placed along a route as it is traversed. They are useful to backtrack along the route if required.

  Adjustments to trace point operation can be made via the same screen. After selecting the **Current Trace Point** option, changes can be made to any registered trace point route.

  Select one of the options, and make changes as required (e.g. trace points can be edited, renamed, turned off or deleted).

OFF ROAD GUIDANCE SCREEN

Compass view is recommended while driving off road. Select the display screen mode icon then the compass view icon.

The compass can be viewed as 'north is up' or 'vehicle is up'. See **NAVIGATION SCREEN OVERVIEW** (page 162).

North is up

The compass North pointer will always be at the top. The vehicle position arrow in the center will point in the direction of travel.The icon **1** on the edge of the compass is the direction to the next way point or destination.

Vehicle is up

The vehicle position arrow in the center will always point north. The compass will rotate to show direction of travel at the top. Icon **1** will move with the compass.

CANCELLING GUIDANCE

Navigation guidance can be cancelled at any time. From the main navigation menu screen, touch the **Cancel Guidance** soft key.

CANCELLING/REINSTATING VOICE GUIDANCE

Voice guidance can be turned off or on from the main navigation menu screen. Toggle the **Voice Guidance/Auto Voice Guidance Off** soft key for on/off.

VOICE CONTROL OF THE NAVIGATION SYSTEM

Many of the navigation features can be activated by voice control. To use voice control, briefly press the voice button on the steering wheel and after the tone, speak one of the system commands. Navigation commands must be preceded with the word **NAVIGATION**.

In response to your command, the system will repeat your instruction and then either carry out your command or ask for more information. If the system asks for more information, wait until the tone has sounded before replying.

To cancel a voice control session, press and hold the steering switch.

The voice control system understands pre-defined commands which must be spoken word for word. A list of all navigation voice commands is given in the following table.

Some of the navigation responses are reinforced by text messages appearing in the message center display.

Voice command	System response
NAVIGATION HELP	Gives spoken information about the navigation commands.
NAVIGATION VOICE GUIDANCE ON	Switches on voice guidance for a set route.
NAVIGATION VOICE GUIDANCE OFF	Switches off voice guidance for a set route.
NAVIGATION SHOW MAP	Displays the navigation map on the touch screen
NAVIGATION SHOW TURN LIST GUIDANCE	Lists forthcoming junctions and turn directions on the split screen.

Voice command	System response
NAVIGATION SHOW CURRENT POSITION	Shows current position of vehicle on the map.
NAVIGATION SHOW DESTINATION	Shows a route preview and allows you to fast forward to the end.
NAVIGATION SHOW ENTIRE ROUTE MAP	Shows complete route.
NAVIGATION SHOW ARROW GUIDANCE	Changes right-hand side of split screen to show arrow guidance directions.
NAVIGATION SHOW INTERSECTION GUIDANCE	When a crossroads is within 1640 feet (500 metres), the crossroad guidance directions will be displayed. If there are no crossroads, a voice message **There are no nearby crossroads on the set route** will be given.
NAVIGATION SHOW FREEWAY GUIDANCE	When travelling on a highway, changes right-hand side of split screen to show the remaining highway exits, and their numbers, up to the required exit for the route.
NAVIGATION DUAL MAP MODE	Displays split screen view.
NAVIGATION SINGLE MAP MODE	Shows full screen map.
NAVIGATION SHOW NORTH UP	Changes orientation of the map so that North is at the top of the screen.
NAVIGATION SHOW HEADING UP	Changes orientation of the map so that the vehicle is always heading up the screen. A compass in the top left-hand corner will point to North.
NAVIGATION SHOW RIGHT MAP NORTH UP	Changes orientation of the right-hand map so that North is at the top of the screen.
NAVIGATION SHOW RIGHT MAP HEADING UP	Changes orientation of the right-hand map so that the vehicle is always heading up the screen.
NAVIGATION ZOOM IN MAXIMUM	Displays the map (left-hand map in split screen mode) at the maximum magnification.
NAVIGATION ZOOM OUT MAXIMUM	Displays the map (left-hand map in split screen mode) at the minimum magnification.
NAVIGATION RIGHT MAP ZOOM IN MAXIMUM	In split screen mode, displays the right-hand map at the maximum magnification.
NAVIGATION RIGHT MAP ZOOM OUT MAXIMUM	In split screen mode, displays the right-hand map at the minimum magnification.
NAVIGATION ZOOM LEVEL (plus number 1 to 13)	Enables magnification of the map (left-hand map in split screen mode), e.g. voice command **Navigation zoom level eleven**. Increments between 1 and 13 can be made.

Voice command	System response
NAVIGATION ZOOM IN (plus number 1 to 12)	Allows zooming in on the map (left-hand map in split screen mode). If the current zoom level is five, the voice command **Navigation zoom in two**, will cause the system to zoom in to level three. Increments between 1 and 12 can be made.
NAVIGATION ZOOM OUT (plus number 1 to 12)	Allows zooming out on the map (left-hand map in split screen mode). If the current zoom level is five, the voice command **Navigation zoom out two**, will cause the system to zoom out to level seven. Increments between 1 and 12 can be made.
NAVIGATION RIGHT MAP ZOOM IN (plus number 1 to 12)	Allows zooming in on the right-hand map. If the current zoom level is five, the voice command **Navigation zoom in two**, will cause the system to zoom in to level three. Increments between 1 and 12 can be made.
NAVIGATION RIGHT MAP ZOOM OUT (plus number 1 to 12)	Allows zooming out on the right-hand map. If the current zoom level is five, the voice command **Navigation zoom out two**, will cause the system to zoom out to level seven. Increments between 1 and 12 can be made.
NAVIGATION GO HOME	Sets the destination to your currently set Home. Home location can be stored using the Stored locations option, available from the Navigation menu on the touch screen.
NAVIGATION GO TO NAME	The system will respond with **Name please** and you can specify a previously stored nametag either as a destination or a way point.
NAVIGATION GO TO PREVIOUS DESTINATION	Allows you to specify a previously stored destination either as a new destination or a way point. If you are following route guidance and this is the last destination set, this will be your current destination.
NAVIGATION GO TO PREVIOUS STARTING POINT	Allows you to specify the start point of a previous route either as a destination or a way point. If you are following route guidance and this is the last start point set, this will be your current start point.
NAVIGATION SHOW (* add word) WAY POINT MAP	Displays the way point asked for, provided it has been set. *Add word - NEXT, 1ST, 2ND, 3RD, 4TH or 5TH.
NAVIGATION DELETE NEXT WAY POINT	Deletes the next way point from the route and recalculates the route if appropriate.
NAVIGATION DETOUR	Prompts the navigation to propose a detour in the current route. This takes effect from your current position and the length of the detour can be specified in Route Preferences.

Voice command	System response
NAVIGATION DETOUR ENTIRE ROUTE	Prompts the navigation to offer one of the alternative routes calculated for the current destination.
NAVIGATION CANCEL GUIDANCE	Cancels route guidance.
NAVIGATION AVOID MAJOR ROADS	Routes are calculated avoiding major roads.
NAVIGATION PREFER MAJOR ROADS	Major roads are included when routes are calculated.
NAVIGATION AVOID TOLL ROADS	Routes are calculated avoiding toll roads.
NAVIGATION PREFER TOLL ROADS	Toll roads are included when routes are calculated.
NAVIGATION AVOID FERRIES	Routes are calculated avoiding ferries.
NAVIGATION PREFER FERRIES	Ferries are included when routes are calculated.
NAVIGATION PLAY DIRECTORY	Prompts a voice message giving all the navigation nametags. This can be interrupted by pressing the voice control button and, after the tone, saying **REPLAY**, **GO TO**, **DELETE** or **CANCEL**.
NAVIGATION DELETE DIRECTORY	Delete the entire directory of navigation nametags.
NAVIGATION MARK CURRENT POSITION	Marks the vehicle's current position as a memory point.
NAVIGATION DYNAMIC ROUTE GUIDANCE ON	Switches on dynamic route guidance.
NAVIGATION DYNAMIC ROUTE GUIDANCE OFF	Switches off dynamic route guidance.
NAVIGATION SHOW TRAFFIC INFORMATION	Displays Traffic information.
NAVIGATION HIDE TRAFFIC INFORMATION	Hides Traffic information.

Voice command	System response
NAVIGATION STORE NAME	Allows you to store nametags as way points or destinations. Each nametag must meet the following criteria: • Be spoken in more than 0.4 seconds, but less than four seconds. • Not similar to any other nametag. • Once stored, you must always speak the name in the same manner as during storage. If the criteria is not met, the system will supply one of the following feedback: • **Name too short, new name please**. • **Name too long, new name please**. • **(nametag) sounds too much like (another nametag)**. • **The names entered are different, new name please**.
NAVIGATION (plus POI from list)	With the map magnification at 0.6 mile (1 km) or less, this command allows up to five selections from the POI list. • Gas • Gas station • Parking • Town center • Hotel • Hospital • Golf course • Shopping mall • Restaurant • I'm hungry • Tourist information • Rest area • Land Rover Retailer • Police station • ATM If more then five are selected, the message **Navigation POI off** is given. Clear your current selection to allow further POIs to be displayed.
NAVIGATION POI OFF	Hides all the POI icons.

END USER LICENCE AGREEMENTS

Please read this agreement carefully before using the Navigation System.

NAVTEQ CORPORATION

This is a licence agreement for your copy of the Navigable Map Database, (the 'DATABASE') originally made by NAVTEQ Corporation), used in the Navigation System. By using this DATABASE you accept and agree to all the terms and conditions below.

OWNERSHIP

The DATABASE and the copyrights and intellectual property or neighbouring rights therein are owned by NAVTEQ Corporation or its licensors.

LICENCE GRANT

NAVTEQ Corporation grants you a non-exclusive licence to use your copy of the DATABASE for your personal use or for use in your business' internal operations. This license does not include the right to grant sub-licenses.

LIMITATIONS OF USE

The DATABASE is restricted for use in the specific system for which it was created. Except to the extent explicitly permitted by mandatory applicable laws, you may not extract or re-utilize substantial pars of the contents of the DATABASE, not reproduce, copy, modify, adapt, translate, disassemble, decompile, or reverse engineer any portion of the DATABASE.

TRANSFER

You may not transfer the DATABASE to third parties, except together with system for which it was created, provided that you do not retain any copy of the DATABASE, and provided that the transferee agrees to all terms and conditions of this agreement.

DISCLAIMER OF WARRANTY

NAVTEQ Corporation does not warrant or make any representations regarding, either express or implied, regarding the use or results of the use of the DATABASE in terms of its correctness, accuracy, reliability, or otherwise and expressly disclaims any implied warranties of quality, performance, merchantability, fitness for a particular purpose or non-infringement.

NAVTEQ Corporation does not warrant that the DATABASE is or will be error-free. No oral or written information or advice provided by NAVTEQ Corporation, your supplier or any other person shall create a warranty.

LIMITATION OF LIABILITY

The price of the DATABASE does not include any consideration for assumption of risk of consequential, indirect or unlimited direct damages which may arise in connection with your use of the DATABASE.

Accordingly, in no event shall NAVTEQ Corporation or supplier of the navigation system using the DATABASE ('Supplier') be liable for any consequential, special, incidental or indirect damages, including without limitation, loss of revenue, data, or use, incurred by you or any third party arising out of your use of the DATABASE, whether in an action in contract or tort or based on a warranty, even if NAVTEQ Corporation or the Supplier has been advised of the possibility of such damages. In any event, NAVTEQ Corporation's liability for direct damages is limited to the price of your copy of the DATABASE.

THE DISCLAIMER OF WARRANTY AND LIMITATION OF LIABILITY, SET FORTH IN THIS AGREEMENT, DO NOT AFFECT OR PREJUDICE YOUR STATUTORY RIGHTS WHERE YOU HAVE ACQUIRED THE DATABASE OTHERWISE THAN IN THE COURSE OF A BUSINESS. Some states and laws do not allow the exclusion of implied warranties, so the above disclaimer may not apply to you.

⚠WARNING

The DATABASE reflects reality as existing before you received the DATABASE and it comprises data and information from government and other sources, which may contain errors and omissions. Accordingly, the DATABASE may contain inaccurate or incomplete information due to the passage of time, changing circumstances, and due to the nature of the sources used. The DATABASE does not include or reflect information on, inter alia - neighbourhood safety, law enforcement, emergency assistance, construction work, road or lane closures, vehicle or speed restrictions, road slope or grade, bridge height, weight or other limits, road or traffic conditions, special events, traffic congestion or travel time.

GOVERMENT END USERS

If the DATABASE is for a region of North America and is being acquired by or on behalf of the United States government or any other entity seeking or applying rights similar to those customarily claimed by the United States government, the DATABASE is licensed with 'limited rights'.

Utilization of the DATABASE is subject to the restrictions specified in the 'Rights in Technical Data and Computer Database' clause at DFARS 252.227-7013, or the equivalent clause for non-defence agencies. Manufacturer of the DATABASE of North America is NAVTEQ Corporation, 10400 W. Higgins Road, Suite 400, Rosemont, Illinois 60018, USA.

4 x 4 INFO MENU

From the touch screen **Home Menu**, touch the **4 x 4 Info** soft key.

A caution screen will be displayed. Touch **Agree** to continue. The last viewed **4 x 4 Info** screen will be displayed.

Note: *When Lo range is selected in the transfer gearbox, 4 x 4 information will be displayed in the virtual instrument panel. The speedometer will move to the right side to allow space for 4 x 4 display.*

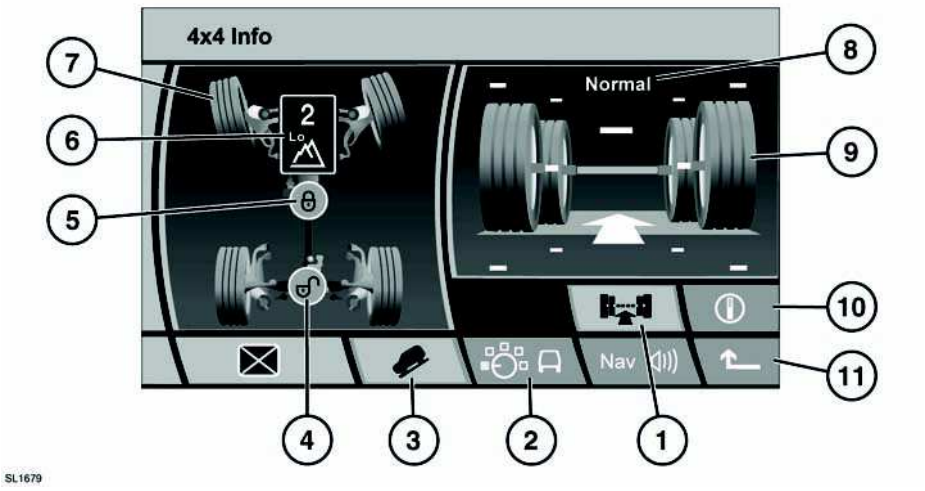

⚠WARNING

Do not adjust the touch screen controls, or allow the system to distract the driver while the vehicle is moving. Driver distraction can lead to accidents, causing serious injury or death.

The **4x 4 Info** area offers no user interaction. It is for monitoring 4 x 4 data only.

1. Chassis view. Touch to select. The softkey will highlight.
2. Terrain Response view. Select to view current TR status and brief advice relating to the selection. Touch the information softkey for more detailed information.
3. Hill Descent Control on/off status. The icon is highlighted when HDC is selected.
4. Rear differential status.
   - Green icon = unlocked
   - Red icon = locked
5. Center differential status.
   - Green icon = unlocked
   - Red icon = locked
6. Gearbox status. Displays selected gear and Hi or Lo gearbox in use.
7. Steering orientation.
8. Suspension height setting.
9. Suspension articulation.
   - The central green bar represents nominal vehicle body height.
   - The white arrow shows direction of vehicle travel.

- White markers above and below the wheels represent limit of suspension travel. Flashing amber arrow heads will be apparent when a limit is reached.
- Individual wheels will move up and down to indicate current articulation.

10. Compass view. Will display only when navigation is in Off-road mode. 'North is up' or 'Vehicle is up' compass display is dependent on the selected navigation mode.

11. Touch to return to previous screen.

SAFETY PRECAUTIONS

⚠DANGER

Do not smoke, use a naked flame, or cause sparks while refuelling. The resulting fire and explosion may cause serious injury or death.

⚠WARNING

Avoid exposing the fuel gasses to any potential sources of ignition as the resulting fire and explosion may cause serious injuries and/or death.

⚠WARNING

Switch off the engine when refuelling, as it is both a source of extreme temperatures, and electrical sparks. Failure to do so may cause a fire or explosion.

⚠WARNING

Switch off any personal electronic devices such as mobile phones or music players. They have the potential to trigger an explosion or a fire.

⚠WARNING

Do not overfill the fuel tank. Overfilling may cause spillage when the vehicle is driven. Spillage may also occur if the fuel expands in high ambient temperatures.

⚠WARNING

Only use containers specifically designed for carrying fuel and always remove them from the vehicle to fill them. Failure to do so may result in spillage and cause a fire.

NOTICE

Do not use leaded fuels, lead substitutes, or fuel additives.

NOTICE

Fuel system cleaning agents should not be used, unless approved by Land Rover. Unapproved products may be harmful to fuel system components on your vehicle.

NOTICE

Only use high quality fuel. Using lower quality fuels can damage the engine, fuel and emission control systems.

Gas station pumps are equipped with automatic cut-off sensing to avoid fuel spillage. Fill the tank until the filler nozzle automatically cuts-off the supply. Do not attempt to fill the tank beyond this point.

OCTANE RATING

Premium unleaded gasoline with a Cost of Living Council (CLC) or Anti Knock Index (AKI) octane rating of 91 or higher should be used.

NOTICE

Even a very small amount of leaded fuel will damage your vehicle's emission control system and could invalidate the emissions warranty. In addition, leaded fuel will damage the oxygen sensors in the fuel injection system and also seriously damage the catalytic converter.

Note: *Federal law requires that gasoline octane ratings be posted on the pumps.*

Note: *Mid or regular grade gasoline with a CLC or AKI rating of not lower than 87 may also be used, but performance and fuel economy will be reduced.*

Using unleaded gasoline with a lower than recommended octane rating, can cause a persistent, heavy engine knock (a metallic rapping noise). If severe, this can lead to engine damage.

Note: *Occasional, light, engine knock experienced while accelerating or climbing hills is acceptable.*

If heavy knock is detected, even when using gasoline with the recommended octane rating, consult your Retailer to have the problem corrected. Failure to do so is misuse of the vehicle, for which Land Rover is not responsible.

ETHANOL

NOTICE

This vehicle is not suitable for use with fuels containing more than 10% ethanol.

NOTICE

Do not use E85 fuels (85% Ethanol content). Equipment necessary for the use of fuels containing more than 10% Ethanol is not fitted to this vehicle. If E85 fuels are used, serious engine and fuel system damage will occur.

Fuels containing up to 10% ethanol (grain alcohol) may be used. Ensure that the fuel has octane ratings no lower than those recommended for unleaded fuel. Most drivers will not notice any operating difference with fuel containing Ethanol. If a difference is detected, the use of conventional unleaded fuel should be resumed.

METHANOL

NOTICE

Wherever possible avoid using fuel containing methanol.

Some fuels contain methanol (Methyl or wood alcohol). If you use fuels containing methanol the fuels must also contain co-solvents and corrosion inhibitors for methanol. Also, do not use fuels which contain more than 3% methanol even if they contain co-solvents and corrosion inhibitors. Fuel system damage or vehicle performance problems resulting from the use of such fuels is not the responsibility of Land Rover and may not be covered under the warranty.

METHYL TERTIARY BUTYL ETHER (MTBE)

Unleaded fuel containing an oxygenate known as MTBE can be used provided that the ratio of MTBE to conventional gasoline does not exceed 15%. MTBE is an Ether based compound derived from Petroleum, which has been specified by several refiners as the substance to enhance the Octane rating of fuel.

REFORMULATED GASOLINE

These fuels are specially formulated to further reduce vehicle emissions. Land Rover fully supports all efforts to protect and maintain ambient air quality and encourages the use of reformulated gasoline where available.

RUNNING OUT OF GAS

NOTICE

Avoid running out of fuel. Doing so can cause damage to the vehicle's engine, fuel and emission control systems.

If the vehicle does run out of fuel, a minimum of 1.32 U.S. gallons (5 litres) will be required to restart the engine. The vehicle will need to be driven 1-3 miles (1.6-5 km) in order to reset the engine management and monitoring systems.

Note: *If the vehicle does run out of gas, seeking qualified assistance is advisable.*

GAS TANK CAPACITY

Avoid the risk of running out of gas and never intentionally drive the vehicle when the gauge indicates that the tank is empty. When refuelling your vehicle after the gauge reads empty, you may not be able to add the gas quantity shown below, as there will be a small reserve remaining in the tank.

Total tank capacity (usable)	26.7 gallons (101 litres)
Fuel specification	Unleaded 91 Octane

GAS CAP LABELS

⚠WARNING

Take note of all warnings and instructions given on the label affixed to the inside of the filler flap. Failure to do so may result in injury or death.

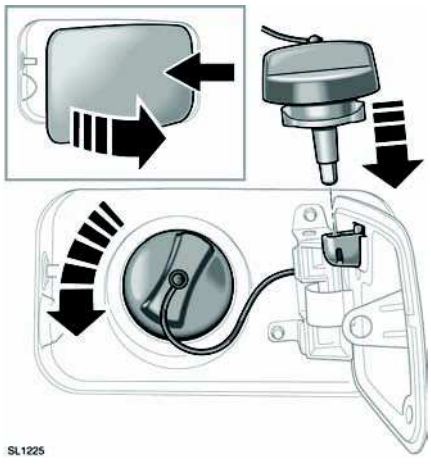

The gas cap flap is located on the right-hand side of the vehicle, at the rear.

1. Ensure that the vehicle is fully unlocked, and press the right side of the flap to open.
2. Open the flap fully.
3. Twist the cap counter clockwise to release.
4. Use the retaining clip to keep the gas cap out of the way while fuelling.

When replacing the cap, tighten it clockwise until the ratchet clicks.

GAS CAP FLAP EMERGENCY RELEASE

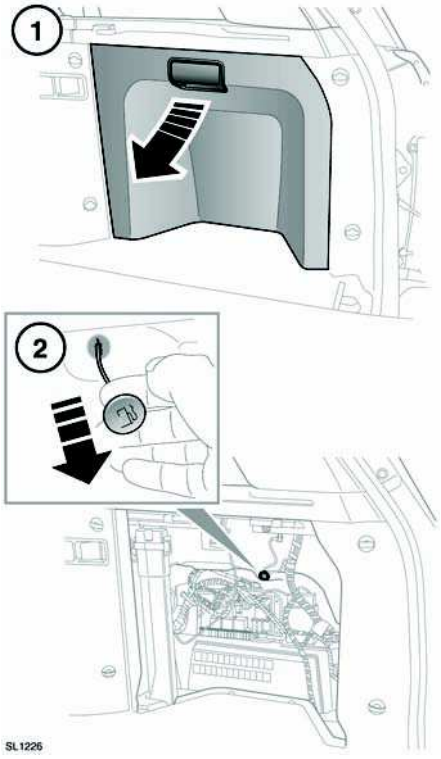

If there is no vehicle electrical power, the gas flap can be opened manually

1. Open the rear right side access hatch.
2. Pull the green release handle to open the flap.

GAS FILLING

⚠WARNING

When refuelling ensure that all windows, doors, and sunroof are fully closed, particularly if young children or animals are in the vehicle.

⚠WARNING

Do not attempt to fill the tank to its maximum capacity. If the vehicle is to be parked on a slope, in direct sunlight, or high ambient temperature, expansion of the fuel could cause spillage.

⚠WARNING

Do not operate the auxiliary heater when refuelling the vehicle. Doing so may cause fuel vapours to combust causing a fire/explosion.

NOTICE

Check the fuel pump information carefully, to ensure that you are putting the correct fuel into the vehicle.

NOTICE

If the vehicle is filled with incorrect fuel it is essential that you seek qualified assistance before you start the engine.

Gas station pumps are equipped with automatic cut-off sensing to avoid fuel spillage. Fill the tank until the filler nozzle automatically cuts-off the supply. Do not attempt to fill the tank beyond this point.

DISABILITY MODIFICATIONS

⚠WARNING

Occupants with disabilities that may require the vehicle to be modified must contact a Land Rover Retailer/Authorized Repairer before any modifications are made.

Modifications may adversely affect the vehicle which can lead to loss of control, resulting in a crash.

(USA only) If you are considering modifying your vehicle in any way to accommodate a disability, for example by altering or adapting the driver's or passenger's seat(s) or air bag system, please contact:

Jaguar Land Rover North America LLC

Customer Relations Center

555 MacArthur Blvd

Mahwah

New Jersey 07430-2327

1-800-637-6837, option #9.

CALIFORNIA PROPOSITION 65 WARNING

⚠WARNING

Engine exhaust, some of its constituents, and certain vehicle components contain or emit chemicals known to the State of California to cause cancer, and birth defects or other reproductive harm. In addition, certain fluids contained in vehicles and certain products of component wear contain or emit chemicals known to the State of California to cause cancer, and birth defects or other reproductive harm.

⚠WARNING

Battery posts, terminals and related accessories contain lead and lead compounds. Wash hands after handling.

⚠WARNING

Certain components of this vehicle such as air bag modules and seat belt pretensioners may contain Perchlorate Material - Special handling may apply for service or vehicle end of life disposal. See www.dtsc.ca.gov/hazardous waste/ perchlorate.

PARTS AND ACCESSORIES

Only use Land Rover approved parts and accessories.

⚠WARNING

The use of non-approved parts and accessories, or the carrying out of non-approved alterations or conversions, may be dangerous and could affect the safety of the vehicle and occupants.

AIR BAG SYSTEM

⚠WARNING

The components that make up the air bag system are sensitive to electrical or physical interference, either of which could easily damage the system and cause inadvertent operation or a malfunction of the air bag module.

To prevent malfunction of the air bag system always consult your Retailer before fitting any of the following:

- Electronic equipment such as a mobile phone, two-way radio or audio system.
- Accessories attached to the front of the vehicle.
- Any modification to the front of the vehicle.

- Any modification involving the removal or repair of any wiring or component in the vicinity of any of the air bag system components, including the steering wheel, steering column, instrument or facia panels.
- Any modification to the facia panels or steering wheel.

SERVICE INTERVALS

An upcoming service interval will be notified to the driver via the Driver Information Module, as either a distance or time left until service is due. Once the distance or time are exceeded, the display will show a negative value (-) to indicate that a service is overdue.

One or both types of service interval (distance and time) may be displayed.

PASSPORT TO SERVICE

Ensure your service provider signs and stamps the book after each service and inspection.

OWNER MAINTENANCE

NOTICE

Any significant or sudden drop in fluid levels, or uneven tire wear, should be reported to a qualified technician without delay.

In addition to the routine maintenance, a number of simple checks must be carried out more frequently.

DAILY CHECKS

- Operation of lamps, horn, turn signals, wipers, washers and warning lamps.
- Operation of seat belts and brakes.
- Look for fluid deposits underneath the vehicle that might indicate a leak.

WEEKLY CHECKS

- Engine oil level.
- Engine coolant check.
- Brake fluid level.
- Power steering fluid level.
- Screen washer fluid level.
- Tire pressures and condition.
- Operate air conditioning.

Note: *The engine oil level should be checked more frequently if the vehicle is driven for prolonged periods at high speeds.*

DRIVING IN ARDUOUS CONDITIONS

When a vehicle is operated in extremely arduous conditions, more frequent attention must be paid to servicing requirements.

Arduous driving conditions include:

- Driving in dusty and/or sandy conditions.
- Driving on rough and/or muddy roads.
- Frequent wading.
- Frequent driving at high speeds in high ambient temperatures above 122°F (50°C).
- Frequent driving in severe cold weather below -40°F (-40°C).
- Frequent trailer towing.
- Driving in areas using road salt or other corrosive materials on the driving surface.

Contact a Land Rover Retailer for advice.

EMISSION CONTROL

Your vehicle is fitted with various items of emission and evaporative control equipment, designed to meet specific territorial requirements. You should be aware that unauthorized replacement, modification or tampering with this equipment by an owner or repair shop, may be unlawful and subject to legal penalties.

In addition, engine settings must not be tampered with. These have been established to ensure that your vehicle complies with stringent exhaust emission regulations. Incorrect engine settings may adversely affect exhaust emissions, engine performance and fuel consumption. They may also cause high temperatures, which will result in damage to the catalytic converter and the vehicle.

ROAD TESTING DYNAMOMETERS (ROLLING ROADS)

It is essential that any dynamometer testing is carried out only by a qualified person, familiar with the dynamometer testing and safety procedures practised by Land Rover Retailers.

SAFETY IN THE GARAGE

⚠WARNING

If the vehicle has been driven recently, do not touch the engine, exhaust and cooling system components until the engine has cooled.

⚠WARNING

Never leave the engine running when the vehicle is in a garage. Exhaust gases are poisonous and can cause unconsciousness and death if inhaled.

⚠WARNING

Do not work beneath the vehicle with the wheel changing jack as the only means of support.

⚠WARNING

Keep your hands and clothing away from drive belts, pulleys and fans. Some fans may continue to operate after the engine has stopped.

⚠WARNING

Remove metal wrist bands and jewellery, before working in the engine compartment.

⚠WARNING

Do not touch electrical leads or components while the engine is running, or with the ignition turned on.

⚠WARNING

Do not allow tools or metal parts of the vehicle to make contact with the battery leads or terminals.

FUEL SYSTEM

⚠WARNING

Under no circumstances should any part of the fuel system be dismantled or replaced by anyone other than a suitably qualified vehicle technician.

⚠WARNING

Ensure sparks and naked lights are kept away from the engine compartment.

⚠WARNING

Wear protective clothing, including, where practicable, gloves made from an impervious material.

POISONOUS FLUIDS

Fluids used in motor vehicles are poisonous and should not be consumed or brought into contact with open wounds.

For your own safety, always read and obey all instructions printed on labels and containers.

USED ENGINE OIL

Prolonged contact with engine oil may cause serious skin disorders, including dermatitis and cancer of the skin. Always wash thoroughly after contact.

It is illegal to pollute drains, water courses or soil. Use authorized waste disposal sites to dispose of used oil and toxic chemicals.

OPENING AND CLOSING THE HOOD



Opening

1. Pull the release lever, located in the left-hand front footwell.
2. Lift the hood safety catch lever, located below the center point of the hood, then raise the hood.

Closing

⚠WARNING

Do not drive with the hood retained by the safety catch alone.

1. Lower the hood until the safety catch engages. Using both hands, press the hood down until the catches click.
2. Check that both catches are engaged, by trying to lift the front edge of the hood.

ENGINE COMPARTMENT OVERVIEW

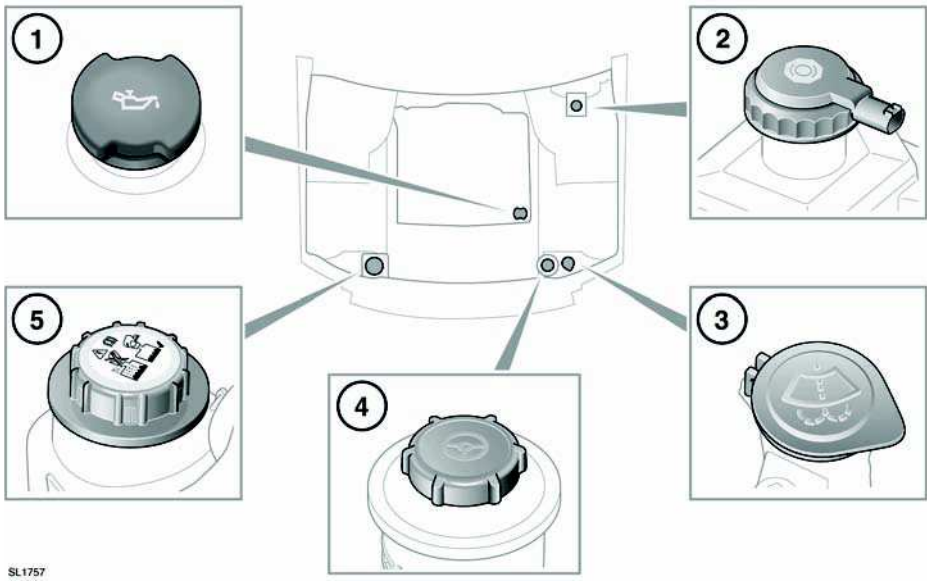

1. Engine oil filler cap.
2. Brake fluid reservoir cap.
3. Windshield washer fluid filler cap.
4. Power steering fluid filler cap.
5. Engine coolant filler cap.

Note: *For top-up procedures see Fluid level checks.*

⚠WARNING

While working in the engine compartment, always observe the safety precautions. See SAFETY IN THE GARAGE (page 188).

⚠WARNING

Do not drive if there is a possibility that leaked fluid will come into contact with a hot surface, such as the exhaust.

CHANGING A BULB

⚠WARNING

If the lighting has just been switched off, give the bulbs time to cool. Handling them when hot may cause personal injury.

NOTICE

Before attempting to replace a bulb, ensure that both the affected lamp and the vehicle's ignition are turned off. If the circuit remains live, a short circuit can occur which may damage the vehicle's electrical system.

NOTICE

Always replace bulbs with the correct type and specification. If you are in any doubt contact your Land Rover Retailer/Authorized Repairer for advice. ***211, BULB SPECIFICATION CHART***

Note: *In certain territories it is a legal requirement to carry spare bulbs. A replacement bulb kit is available as an approved accessory from your Retailer.*

Note: *After replacing a headlamp bulb, headlamps alignment should be checked with the appropriate equipment.*

HEADLAMP - BULB IDENTIFICATION

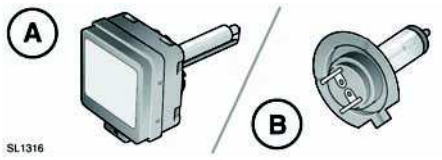

A. Xenon bulb.

B. Halogen bulb.

HALOGEN BULBS

Dependent on vehicle specification, halogen bulbs may be used for high beam, low beam, and front fog lamps.

NOTICE

Take care not to touch this type of bulb with your fingers; always use a cloth to handle them. If necessary, clean the bulb with methyl hydrate or denatured alcohol to remove fingerprints.

XENON LAMPS

⚠WARNING

High voltage is required to ignite the gas and metal vapour which are used to power Xenon lamps. Contact with this voltage can cause serious injury. Replacement or maintenance of Xenon lamps should be carried out only by suitably qualified personnel.

⚠WARNING

Xenon lamp units operate at a very high temperature. Ensure that the lamp units have cooled before attempting to touch them.

⚠WARNING

Xenon lamp units contain Mercury which is highly toxic and can be extremely harmful.



Seek advice about the correct disposal of Xenon lamp units from a Land Rover Retailer or your local authority.

XENON HEADLAMP BULB

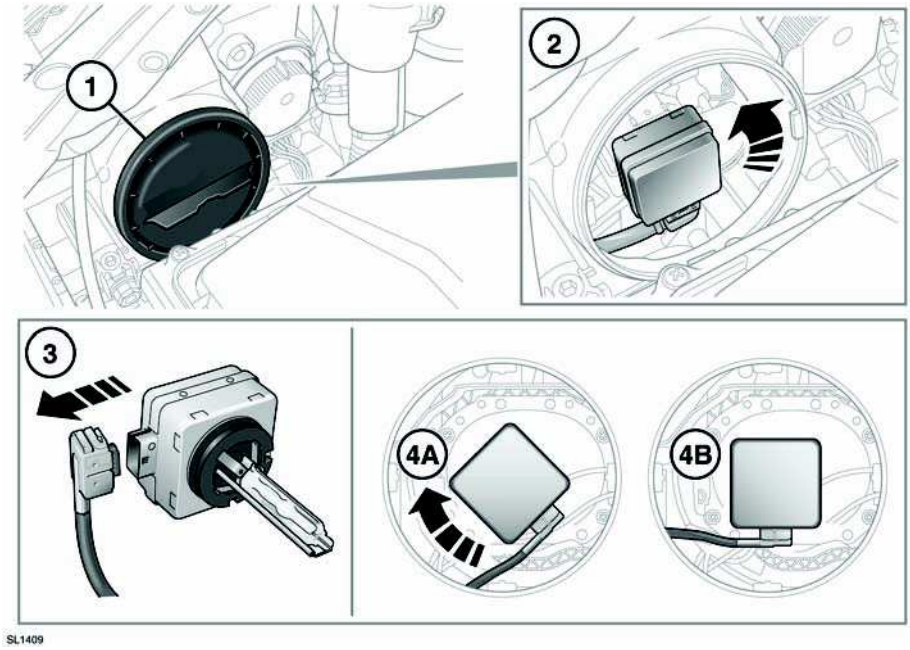

1. Twist and lift off the cap.
2. Rotate the bulb unit counter clockwise and carefully withdraw the unit.
3. Pull off the electrical connector.
4. Connect the new bulb unit.
   - **A.** Carefully insert into the headlamp unit as indicated.
   - **B.** Twist clockwise to lock the bulb in place. Replace the cap.

HALOGEN HEADLAMP BULB

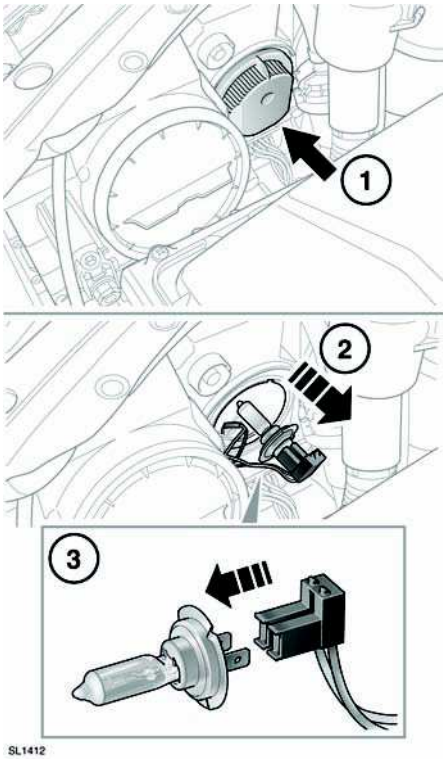

1. Twist and lift off the cap.
2. Pull out the holder and bulb.
3. Release the bulb from the holder.
4. Insert the new bulb and repeat the above procedure in reverse order.

SIDE REPEATER LAMP BULB

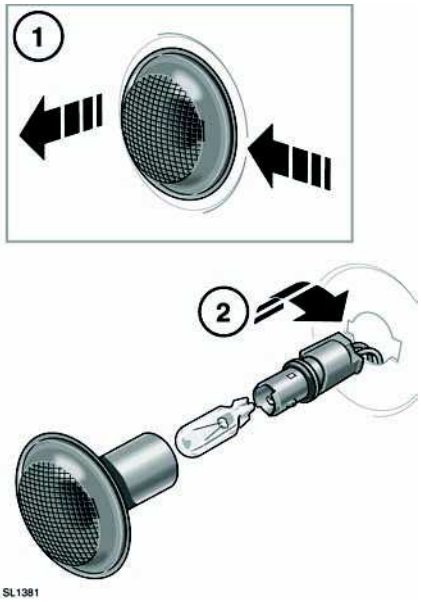

1. Push the lens unit firmly towards the rear of the vehicle and prise out the leading edge. Release the rearward pressure, allowing the lens unit to be released from its fixing point.
2. Twist to release the bulb holder from the lens unit. Pull the bulb from its socket.

Insert the new bulb using the previous process in reverse order.

FRONT FOG LAMP BULB

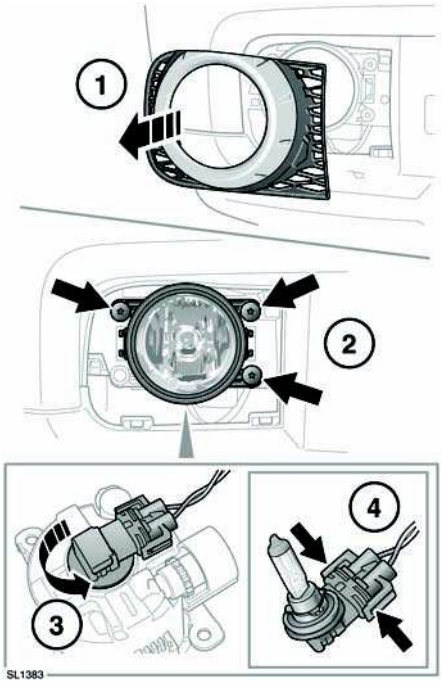

1. Insert a screwdriver through the lower part of the headlamp grille then lift and release the bottom securing tabs. Pull the grille forward and remove.
2. Undo the three retaining screws, and remove the lamp unit.
3. Rotate the bulb holder counter clockwise and remove from the lamp unit.
4. Press the two clips together and remove the electrical connector.

Insert the new bulb using the previous process in reverse order.

REVERSING LAMP BULB

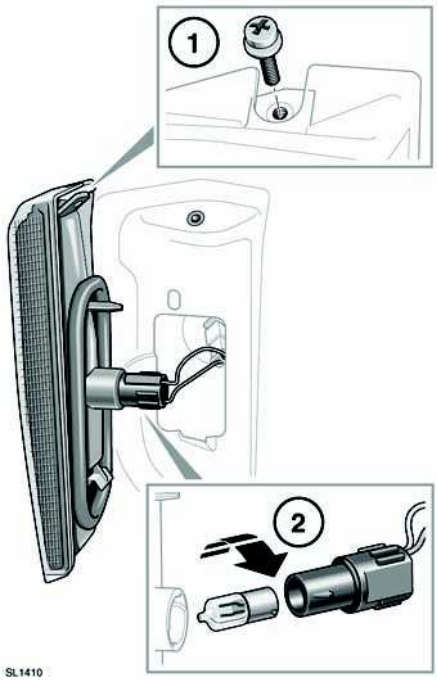

The lamps are located either side of the license plate.

1. With the tailgate open, remove the screw from the unit. Pull the unit carefully away from the vehicle.
2. Twist and pull the bulb holder from the lamp unit. Pull the bulb from the electrical connector.

Ensure that the lamp unit is placed face down on a flat surface covered in soft material to prevent damage.

Insert the new bulb using the previous process in reverse order.

LICENCE PLATE LAMP BULB

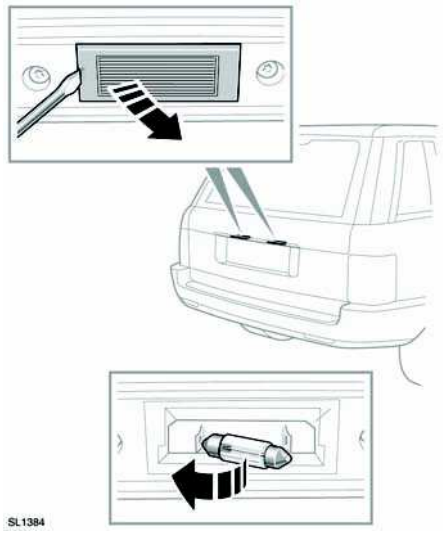

Follow the steps illustrated. Insert a new bulb and refit the components.

INTERIOR LAMPS - BULB CHANGING

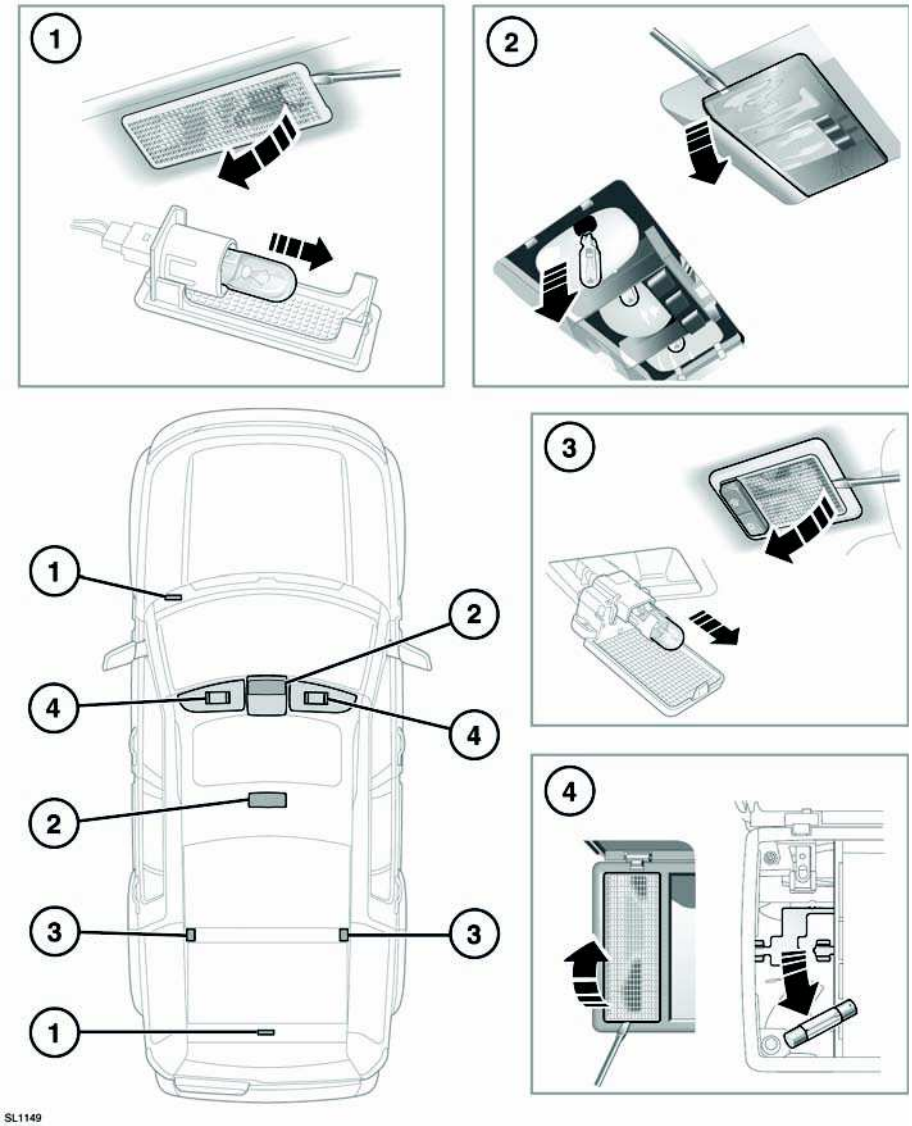

Follow the steps illustrated. Insert a new bulb and refit the components.

1. Footwell and puddle lamps.
2. Courtesy lamp and map lamps.
3. Rear courtesy lamps.
4. Vanity mirror lamps.

SUNROOF RESET

If the battery is disconnected or the power supply is interrupted while the sunroof is partially open, it will need to be recalibrated.

When the battery is reconnected or the power supply is restored, recalibrate the sunroof as follows:

1. Switch the ignition on.
2. With the sunroof closed, press and release the front of the switch. The sunroof will move to the tilt position.
3. Press the front of the sunroof switch and hold for 20 seconds.

The sunroof can now be operated as normal.

SERVICE DATA RECORDING

Service data recorders in your vehicle are capable of collecting and storing diagnostic information about your vehicle. This potentially includes information about the performance or status of various systems and modules in the vehicle such as engine, throttle, steering or brakes.

In order to properly diagnose and service your vehicle, Land Rover and service and repair facilities may access vehicle diagnostic information through a direct connection to your vehicle.

PARTS AND ACCESSORIES

⚠WARNING

The use of non-approved parts and accessories, or the carrying out of non-approved alterations or conversions, may be dangerous and could affect the safety of the vehicle and occupants and also invalidate the terms and conditions of the vehicle warranty.

⚠WARNING

Land Rover will not accept any liability for death, personal injury or damage to property which may occur as a result of fitment of non-approved accessories or the carrying out of non-approved conversions to Land Rover vehicles.

CLEANING THE EXTERIOR

NOTICE

Following cleaning of the vehicle exterior (particularly with a pressure washer), it is recommended that the vehicle is taken for a short drive to dry out the brakes.

NOTICE

Some high pressure cleaning systems are sufficiently powerful to penetrate door/window seals and damage trim and door locks. Never aim the water jet directly at the engine air intake, heater air intakes, body seals (doors, sunroof, windows etc.) or at any components which may be damaged (lights, mirrors, exterior trim etc.).

NOTICE

Do not use a power wash system in the engine bay area as it may cause damage.

NOTICE

Remove any heavy deposits of mud and dirt with a hose before washing the vehicle.

NOTICE

Substances which are corrosive, such as bird droppings and tree resin, can damage the vehicle's paintwork and should be removed as soon as possible.

NOTICE

Ensure that you read and comply with all warnings and product instructions supplied with any cleaning products.

NOTICE

Never use cleaning products that are not approved for use on vehicles.

Note: *Do not apply polish to any unpainted areas of the bumper mouldings. It will become ingrained in the textured finish.*

USING SPIRIT CLEANER

Stubborn stains such as tar spots and grease may require the use of white spirt. After use, ensure the area is washed with warm soapy water to remove all traces of the spirit.

UNDERBODY MAINTENANCE

Regularly flush the underbody with plain water, and pay particular attention to areas where mud and debris collect.

If damage or corrosion are detected, have the vehicle checked by a Land Rover Retailer as soon as possible.

CLEANING AFTER OFF-ROAD DRIVING

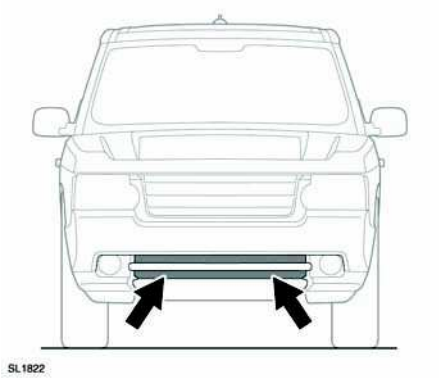

NOTICE

Ensure that the areas around air intakes and the front grille are clean and clear of debris. Pay particular attention to the lower grille and radiator. Failure to do so may cause the engine to overheat, leading to severe engine damage.

Ensure that the vehicle underside is cleaned as soon as possible after driving off-road.

PAINT DAMAGE

Minor chips and scratches can be touched up using materials available from a Land Rover Retailer. Your VIN code will give your supplier the color reference.

CLEANING THE INTERIOR

⚠ CAUTION

Some cleaning products contain substances that are harmful and can cause health problems if used incorrectly and may cause damage to the vehicle interior. Ensure that you read the manufacturer's instructions carefully.

PLASTIC AND CLOTH

⚠WARNING

Do not polish the instrument panel. Polished surfaces are reflective, and may interfere with the drivers view.

Clean plastic or cloth faced surfaces with warm water and non-detergent soap. Then wipe clean with a soft cloth.

LEATHER

NOTICE

Only use cleaning products specifically designed for use on leather. Do not use chemical, alcohol, or abrasive materials, as they will cause rapid deterioration of the leather. The use of products which are not approved will invalidate your warranty.
If you are in any doubt as to which products to use, consult your Land Rover Retailer/ Authorized Repairer.

NOTICE

Some materials/fabrics are prone to dye transfer, which can cause unsightly discoloration of lighter colored leathers. Affected areas should be cleaned and re-protected as soon as possible.

Leather should be cleaned and protected at least every six months.

To prevent ingrained dirt and staining, inspect the seat upholstery regularly and clean every one to two months as follows:

1. Wipe off fine dust from the seat surfaces using a clean, damp, non-colored cloth. Change frequently to a clean area of cloth to avoid abrasive action on the leather surface. Avoid over wetting the leather.
2. If this is not sufficient, use a cloth which has been dampened with warm soapy water and then wrung out. Use only mild non-caustic soap.
3. Use Land Rover leather cleaner for heavily soiled areas. Dry off and rub the with a clean soft cloth, changing surfaces regularly.

Use Land Rover leather cleaner several times a year to maintain the leather's suppleness and appearance. The cleaner will nourish and moisturise and help to improve the surface protection film against dust and substances.

- Dark clothing may stain leather seats just like other upholstery products.
- Sharp objects such as belts, zippers, rivets etc can leave permanent scratches and scratch marks on the leather surface.
- Unless spillages such as tea, coffee or ink are washed away immediately, permanent staining may have to be accepted.
- Do not use a cleaning product that is not specifically for use in a vehicle. Such products may give an initial impressive appearance but their use will lead to rapid deterioration of the leather and will invalidate the warranty.

If a valet service is used, ensure that the specialist concerned is aware of, and follows, these instructions precisely.

SEAT BELTS

⚠WARNING

Do not allow any water, cleaning products, or fabric from cloths to enter the seat belt mechanism. Any substance which enters the mechanism may affect the performance of the seat belt in an impact.

Extend the seat belts fully, then use warm water and a non-detergent soap to clean. Allow the seat belts to dry naturally while fully extended.

Note: *When cleaning a seat belt, take the opportunity to examine the webbing for damage/wear. Any wear or damage should be reported to, and rectified by, a Land Rover Retailer.*

AIR BAG MODULE COVERS

⚠WARNING

Air bag covers should only be cleaned using a slightly dampened cloth, and a small amount of upholstery cleaner.

⚠WARNING

Do not allow the air bag covers, or surrounding areas, to become contaminated with liquids. Any substance which enters the mechanism can prevent correct deployment of an air bag during an impact.

INSTRUMENT PANEL,TOUCH SCREEN AND AUDIO SYSTEM

- Clean with a lightly moistened cloth.
- Do not use chemical agents or domestic cleaners.
- Do not allow sharp, hard or abrasive objects to make contact with screens.
- Avoid exposing screens to direct sunlight for long periods.
- To prevent errors occurring, ensure that only one finger at a time is in contact with the touch screen.
- Do not use excessive pressure.

WIPER BLADE REPLACEMENT

Fit only replacement wiper blades that are identical to the original specification.

Front wiper blade: The blade is locked in position by a locking tab on the wiper arm. Push the tab to unlock. Fitting a new blade is a reversal of the removal process.‘

Rear wiper blade: The blade is inaccessible in its parked position. Remove as follows;

1. Operate the rear wiper.
2. When the blade is in a near vertical position, open the upper tailgate. The wiper will stop.
3. Turn the ignition off.
4. Lower the upper tailgate and lift the wiper arm away from the glass.
5. Pivot the blade assembly away from the arm.
6. Press the tab (arrowed in illustration) to release the blade assembly. Slide it off the end of the wiper arm. Carefully lower the arm to the glass.

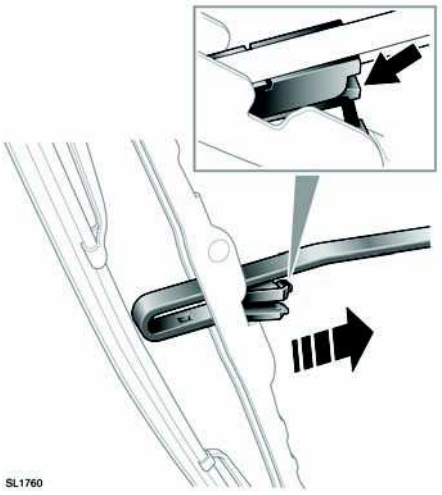

Reverse the procedure to fit the new blade assembly. When the upper tailgate is closed and ignition is turned on, the rear wiper will return to the parked position.

BLOCKED WASHER JETS

⚠CAUTION

Do not operate the washer jets during unblocking or adjustment. Windshield washer fluid may cause irritation to the eyes and skin. Always read and observe the washer fluid manufacturers instructions.

If a washer jet becomes blocked, use a thin strand of wire to unblock the jet by inserting the wire into the jet. Ensure that the wire is completely removed after unblocking. The washer jet position may also be adjusted by inserting the point of a needle into the jet and gently repositioning it.

The rear screen jets located in the wiper arm are not adjustable.

ENGINE OIL CHECK

NOTICE

Check the engine oil weekly. If any significant or sudden drop in oil level is noted, seek qualified assistance.

NOTICE

If the message **OIL PRESSURE LOW** *is displayed, stop the engine as soon as it is safe to do so and seek qualified assistance. Do not start the engine until the cause has been rectified.*

Prior to checking the oil level ensure that:

- The vehicle is on level ground.
- The engine oil has reached working temperature (oil is hot).
- The engine has been switched off for 15 minutes, as the system will not give an accurate reading until the oil level has stabilised.

The oil level can then be checked as follows:

1. Switch on the ignition (do not start the engine).
2. Ensure Park (**P**) is selected.
3. Select the **Service menu** using the driver information menu control.
4. Select **Oil level display** from the Service menu. The current oil level status and topping-up advice is displayed in the instrument panel.
5. Top-up as instructed

Messages to the right of the gauge advise of any action you may need to take.

If the oil level is within the required operating range, the message **Engine Oil Level OK** will be displayed. Do not add any additional oil to the engine.

If the oil level is below the required operating range, a message advising you how much oil to add will be displayed (e.g. **Add 0.5 Litre**). Add the recommended quantity of oil.

If the message **Engine Oil Level Overfilled** is displayed, seek qualified assistance immediately. Do not drive the vehicle as this will cause serious damage to the engine.

If the message **Engine Oil Level Underfilled** is displayed, add 3.5 pints (2 litres) of oil, then recheck the level.

If the message **Engine Oil Level Not Available** is displayed, the oil level is stabilising. Switch off the ignition, wait 10 minutes, then recheck the oil level display.

If the warning message **ENGINE OIL LEVEL MONITOR SYSTEM FAULT** is displayed, seek qualified assistance.

TOPPING UP THE ENGINE OIL

NOTICE

Your vehicle warranty may be invalidated if damage is caused by using oil that does not meet the required specification.

NOTICE

Failure to use an oil that meets the required specification could cause excessive engine wear, a build up of sludge and deposits, and increase pollution. It could also lead to engine failure.

NOTICE

Overfilling with oil could result in severe engine damage. Oil should be added in small quantities and the level re-checked to ensure that the engine is not overfilled.

1. Remove the oil filler cap.
2. Add oil as instructed by the oil level display.
3. Clean up any oil spilled during topping-up.

4. Check the oil level again after 10 minutes.

It is essential to use the correct specification oil and to ensure it is suitable for the climatic conditions in which the vehicle is to be operated.

Note: *The approximate quantity of oil required to raise the level from **MIN** to **MAX** on the dipstick is 3.5 pints (2 litres) for all models.*

ENGINE OIL SPECIFICATION

Use only 5W-20 oil meeting specification WSS-M2C925-A.

In an emergency, if the oil specification above is unavailable, top up with a maximum of 2 pints (1 litre) of oil meeting specification ILSACGF-4 API SM.

Land Rover recommends Castrol oils.

COOLANT LEVEL CHECK

NOTICE

Running the engine without coolant will cause serious engine damage.

The coolant level in the expansion tank should be checked at least weekly (more frequently in high mileage or arduous operating conditions). Always check the level when the system is cold.

Ensure the coolant level remains between the COLD FILL RANGE indicator marks located on the side of the expansion tank. Ignore any coolant visible in the top section of the tank

If coolant/steam is expelled from the pressure cap, or the level has dropped suddenly, or by a large amount, arrange for the vehicle to be examined by a qualified technician as soon as possible.

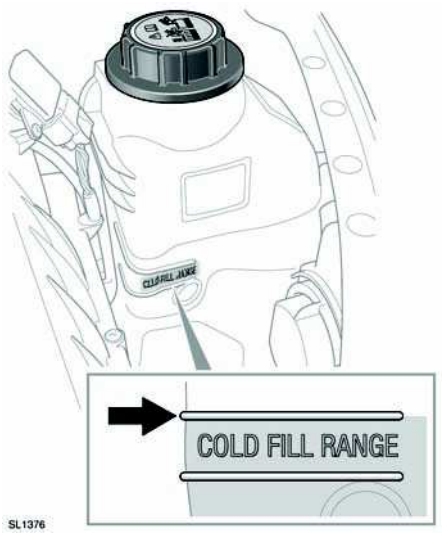

TOPPING UP THE COOLANT

⚠WARNING

Never remove the filler cap when the engine is hot - escaping steam or scalding water could cause serious personal injury.

Unscrew the filler cap slowly, allowing the pressure to escape before removing completely.

⚠WARNING

Avoid spilling antifreeze onto a hot engine - a fire may result.

NOTICE

When travelling in territories where the water supply contains salt, always ensure you carry a supply of fresh (rain or distilled) water. Topping up with salt water will cause serious engine damage.

Top-up to the upper level indicator mark of the COLD FILL RANGE located on the side of the expansion tank. Use only a 50% mix of water and Castrol SF antifreeze.

Note: *In an emergency - and only if the approved antifreeze is unavailable - top-up the cooling system with clean water, but be aware of the resultant reduction in frost protection. Do not top-up or refill with conventional antifreeze formulations. If in doubt consult a qualified technician.*

Ensure the cap is tightened fully after top-up is completed by turning the cap until the ratchet cap clicks.

ANTIFREEZE

⚠WARNING

Antifreeze is poisonous and can be fatal if swallowed - keep containers sealed and out of the reach of children. If accidental consumption is suspected, seek medical attention immediately.

⚠WARNING

If the fluid comes into contact with the skin or eyes, rinse immediately with plenty of water.

NOTICE

The use of non-approved antifreeze will have an adverse effect on the engine cooling system and therefore engine durability.

NOTICE

Antifreeze will damage painted surfaces; soak up any spillage with an absorbent cloth immediately and wash the area with a mixture of car shampoo and water.

Antifreeze contains important corrosion inhibitors. The antifreeze content of the coolant must be maintained at 50% ± 5% all year round (not just in cold conditions). To ensure that the anti-corrosion properties of the coolant are retained, the antifreeze content should be checked once a year and completely renewed every ten years, regardless of distance travelled. Failure to do so may cause corrosion of the radiator and engine components.

The specific gravity of a 50% antifreeze solution at 68°F (20°C) is 1.068 and protects against frost down to -40°F (-40°C).

BRAKE FLUID CHECK

⚠WARNING

Seek qualified assistance immediately if brake pedal travel is unusually long or if there is any significant loss of brake fluid. Driving under such conditions could result in extended stopping distances or complete brake failure.

⚠WARNING

Brake fluid is highly toxic - keep containers sealed and out of the reach of children. If accidental consumption of fluid is suspected, seek medical attention immediately.

⚠WARNING

If the fluid comes into contact with the skin or eyes, rinse immediately with plenty of water.

⚠WARNING

Take care not to spill brake fluid onto a hot engine - a fire may result.

⚠WARNING

Do not drive the vehicle with the fluid level below the MIN mark.



USA



Canada and Mexico

If the quantity of fluid in the brake reservoir drops below the recommended level, a red warning lamp in the instrument pack will illuminate.

Note: *If the warning lamp illuminates while the vehicle is being driven, stop the vehicle as soon as safety permits by gently applying the brakes. Check and top-up the fluid level if necessary.*

With the vehicle on level ground, check the fluid level at least every week (more frequently in high mileage or arduous operating conditions).

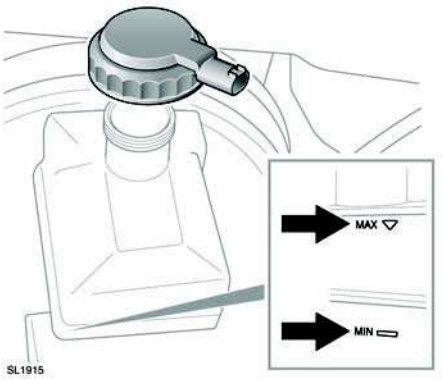

Look at the fluid level through the side of the transparent reservoir without removing the filler cap.

The brake fluid must be between the **MAX** and **MIN** marks.

TOPPING UP THE BRAKE FLUID

NOTICE

Brake fluid will damage painted surfaces. Soak up any spillage with an absorbent cloth immediately and wash the area with a mixture of car shampoo and water.

NOTICE

Only use new fluid from an airtight container. Fluid from opened containers or fluid previously bled from the system will have absorbed moisture, which will adversely affect performance and must not be used.

1. Clean the filler cap before removing to prevent dirt from entering the reservoir.
2. Remove the filler cap.
3. Top-up the reservoir to at least the minimum mark using Shell DOT4 ESL brake fluid. If Shell DOT4 ESL is not available, a low viscosity DOT4 brake fluid that meets ISO 4925 class 6 and Land Rover LRES22BF03 requirements may be used.

NOTICE

Do not top-up the brake fluid to the maximum mark unless the brake pads have been replaced. If unsure seek qualified assistance.

4. Replace the cap and reservoir cover.

POWER STEERING FLUID CHECK

⚠WARNING

Power steering fluid is highly toxic. Keep containers sealed and out of reach of children. If accidental consumption of fluid is suspected, seek medical attention immediately.

⚠WARNING

If the fluid comes into contact with the skin or eyes, rinse immediately with plenty of water.

⚠WARNING

Take care not to spill power steering fluid onto a hot engine - a fire may result.

NOTICE

Do not start the engine if the fluid level has dropped below the **MIN** *mark. Severe damage to the steering pump could result.*

NOTICE

Seek qualified assistance immediately if there is a noticeable drop in the fluid level. Severe damage to the steering pump could result.

NOTICE

If fluid loss is slow, the reservoir may be topped-up to the upper level mark to enable the vehicle to be driven to a repair facility for examination. However, it is recommended that you seek qualified assistance before driving.

Check and top-up the fluid with the vehicle on level ground, engine switched off, and the system cold. Ensure that the steering wheel is not turned after stopping the engine.

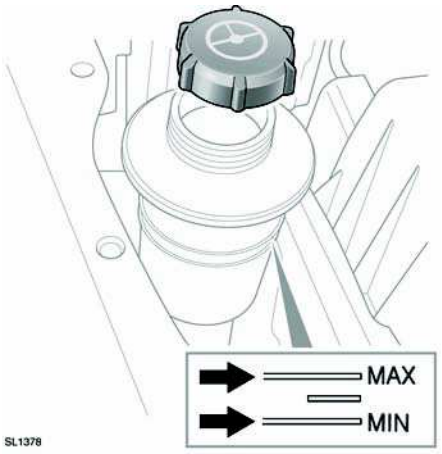

The level of fluid can be seen through the translucent body of the reservoir.

The fluid level should be between the **MIN** and the **MAX** marks.

TOPPING UP THE STEERING FLUID

⚠WARNING

Do not spill power steering fluid onto a hot engine. Doing so may result in a fire.

NOTICE

Power steering fluid will damage painted surfaces. Soak up any spillage with an absorbent cloth immediately and wash the area with a mixture of car shampoo and water.

NOTICE

Do not fill the reservoir above the **MAX** *mark.*

1. Clean the filler cap before removing to prevent dirt from entering the reservoir.
2. Remove filler cap.
3. Using Texaco Cold Climate PSF fluid 14315, top up the reservoir until the fluid level is between the **MIN** and **MAX** marks.

4. Replace filler cap.

WASHER FLUID CHECK

⚠WARNING

Some screen washer products are inflammable, particularly if high or undiluted concentrations are exposed to sparking. Do not allow washer fluid to come into contact with naked flames or sources of ignition.

⚠WARNING

If the vehicle is operated in temperatures below 40°F (4°C), use a washer fluid with antifreeze protection. In cold weather, failure to use a washer fluid with frost protection, could result in impaired vision and increase the risk of a vehicle crash.

NOTICE

Do not use an antifreeze or vinegar/water solution in the washer reservoir - antifreeze will damage painted surfaces, while vinegar can damage the windshield washer pump.

NOTICE

Body panels may suffer discoloration as a result of windshield washer fluid spillage. Take care to avoid spillage, particularly if an undiluted or high concentration is being used. If spillage occurs, wash the affected area immediately with water.

Note: *National or local regulations restrict the use of Volatile Organic Compounds (VDCs) which are commonly used as antifreeze agents in washer fluid. A washer fluid with limited VDC content should be used only if it provides adequate freeze resistance for all climates in which the vehicle will be operated.*

TOPPING UP THE WASHER FLUID

The washer reservoir supplies both front and rear screen washer jets and headlamp washer jets.

Check and top-up the reservoir level at least every week. Always top-up with screen washer fluid to prevent freezing.

Operate the washer switches periodically to check that the nozzles are clear and properly directed.

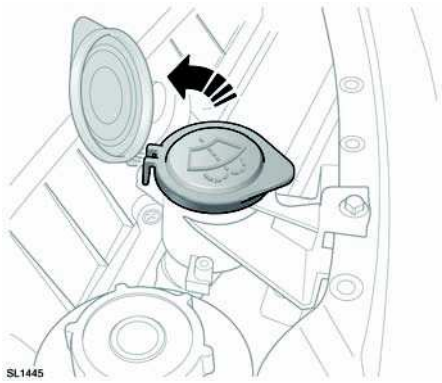

1. Clean the filler cap before removing to prevent dirt from entering the reservoir.
2. Remove filler cap.
3. Top-up the reservoir until the fluid is visible in the filler neck.
4. Replace filler cap.

ENGINE DATA

	V8
Capacity	305 cubic inches (4999 cm^3)
Firing order	1-5-4-2-6-3-7-8
Bore	3.64 in (92.5 mm)
Stroke	3.66 in (93 mm)
Number of cylinders	8
Compression ratio	Normally Aspirated - 11.5:1, Supercharged - 9.5:1

LUBRICANTS AND FLUIDS

Part	Specification
Engine oil	SAE 5W-20 meeting specification WSS-M2C925-A only. Land Rover recommends Castrol SLX Professional 5W-20.
Main gearbox oil	Shell ATF M1375.4
Transfer gearbox oil	Shell TF 0753.
Front differential oil	Castrol SAF XO.
Rear differential (non-locking) oil	Castrol SAF XO.
Rear differential (electronic locking) oil	Castrol SAF Carbon Mod Plus.
Power steering fluid	Texaco Cold Climate PSF 14315.
Brake fluid	Shell DOT4 ESL. If unavailable, use a low viscosity DOT4 brake fluid that meets ISO 4925 class 6 requirements.
Windshield washer	Windshield wash with antifreeze protection.
Coolant	50% mixture of Castrol SF antifreeze and water.

CAPACITIES

Item	Capacity
Fuel tank (usable volume)	26.7 gallons (101 litres)
Engine oil refill and filter change - NA	17 pints (8.0 litres)
Engine oil refill and filter change - SC	17 pints (8.0 litres)
Front differential - refill	1.6 pints (0.75 litres)

Item	Capacity
Front differential - dry fill	1.7 pints (0.8 litres)
Rear differential (non-locking) refill	2.4 pints (1.14 litres)
Rear differential (non-locking) dry fill	2.5 pints (1.2 litres)
Rear differential (electronic locking) refill	3.27 pints (1.55 litres)
Rear differential (electronic locking) dry fill	3.4 pints (1.6 litres)
Washer reservoir	13.3 pints (6.3 litres)
Cooling system (refill) - NA	31.7 pints (15 litres)
Cooling system (refill) - SC	33.8 pints (16 litres)

The quoted capacities are approximate and provided as a guide only. All oil levels must be checked using the dipstick, level plugs or driver information module, as applicable.

WEIGHTS

Vehicle weight from[1]	Gross Vehicle Weight (GVW)[2]	Gross Train Weight[3] (off-road weights)
5710 lbs 2590 kg	7055 lbs 3200 kg	14771 lbs (9259 lbs) 6700 kg (4200 kg)
1 Including full fuel tank.		
2 The maximum permissible weight of the vehicle including passengers and load.		
3 The maximum permissible weight of the vehicle and braked trailer including their respective loads.		

Maximum front axle load[1]	Maximum rear axle load[1]	Maximum roof rack load[2] (off-road weights)
3373 lbs 1530 kg	4079 lbs 1850 kg	220 lbs (110 lbs) 100 kg (50 kg)
[1] The front and rear axle maximum loads can not be reached simultaneously as this will exceed the GVW limit.		
[2] This figure includes the weight of the approved Land Rover roof rack system.		

WHEEL ALIGNMENT

Variant	Front toe	Rear toe
NA Petrol	0°	0° 18´ ± 0° 12´
SC Petrol	0° 9´ ± 0° 12´	0° 12´ ± 0° 12´

DIMENSIONS

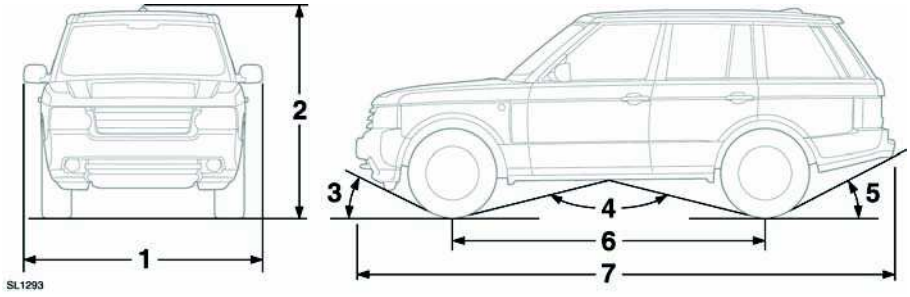

Item	Description	inches (mm)	Degrees
1	Width (including mirrors)	87.2 (2216)	-
2	Overall height - standard setting	73.9 (1878)	-
2	Overall height - Access height	72.3 (1837)	-
3	Approach angle (at curb weight)	Standard setting Off-road setting	29° 34°
4	Ramp breakover angle (at curb weight)	Standard setting Off-road setting	130° 120°
5	Departure angle without tow hitch (at curb weight)	Standard setting Off-road setting	24.2° 26.6°
5	Departure angle with fixed height tow hitch (at curb weight)	Standard setting Off-road setting	15.2° 17.4°
6	Wheelbase	113.4 (2880)	-
7	Overall length	195.6 (4967)	-
-	Track - front	64.1 (1629)	-
	Track - rear	64 (1625)	-
-	Wading depth	27.6 (700)	-
-	Minimum ground clearance at off-road setting	11.1 (283)	-

Item	Description	inches (mm)	Degrees
-	Turning circle (curb to curb)	39.4ft (12m)	-
-	Brake pedal free travel	No adjustable free travel	

BULB SPECIFICATION CHART

NOTICE

Before attempting to replace a bulb, ensure that both the affected lamp and the vehicle's ignition, are turned off. If the circuit remains live, a short circuit can occur which may damage the vehicle's electrical system.

Note: *LED bulbs can be replaced only by a Land Rover Retailer.*

Lamp	Specification	Power (Watts)
Halogen headlamp	H7	55
Xenon headlamp (low and high beam)	D3S	55
Cornering lamps	LED	-
Front side repeater lamps	W5W	5
Front direction indicators	LED	-
Rear direction indicators	LED	-
Front fog lamps	H11	55
Reverse lamps	H6	6
Rear fog lamps	LED	-
Stop/tail lamps	LED	-
License plate lamps	W5W	5
Puddle lamps	W5W	5
All Interior lamps	W6W	6
Glove box lamp	W5W	5
Vanity mirror lamp		1.2

WHEELS AND TIRES

Wheel size	Tire size	Load Index
8.0J x 19	255/55 R19 V - All terrain tire	111
8.0J x 19	255/65 R19H Goodyear Ultra Grip - winter tire	111
8.5J x 20	255/50 R20 Y - All terrain and all terrain sport tire	109
8.5J x 20	255/50 R20H Continental Cross Contact Winter	109

ACCESSORY WHEELS AND TIRES

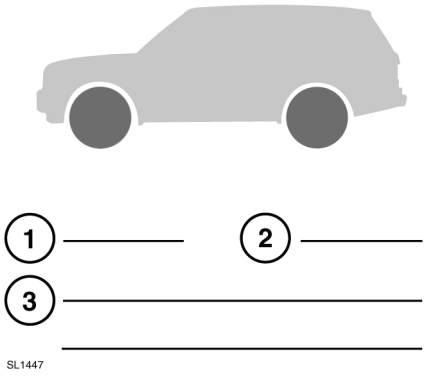

Note: *Use the diagram above to record accessory wheel and tire information.*

1. Front tire pressure.
2. Rear tire pressure.
3. Wheel and tire information (size, speed rating, etc.).

⚠WARNING

Contact your Land Rover Retailer/Authorized Repairer before fitting any accessory wheels and tires. Fitting incorrect wheel/tire combinations can seriously affect the ride and handling of your vehicle. In extreme cases, this may lead to loss of control of the vehicle.

SMART KEY SYSTEM TRANSMITTERS

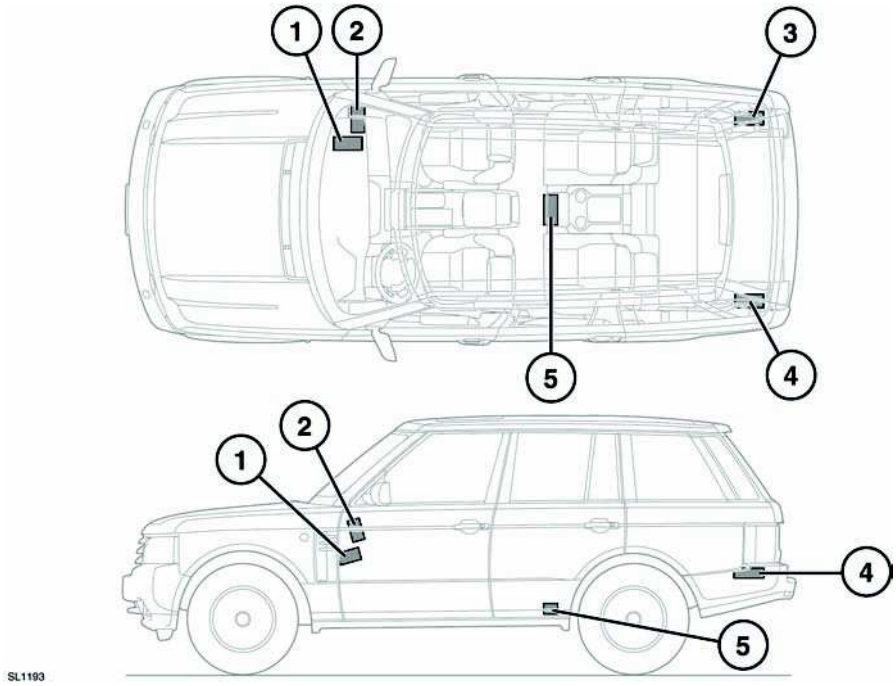

1. Keyless start module.
2. Cabin front transmitter.
3. Right-hand side loadspace transmitter.
4. Left-hand side loadspace transmitter.
5. Cabin rear transmitter.

⚠WARNING

Any person fitted with an implanted medical device should be kept at a distance of at least 8.7 inches (22 cm) away from any transmitter mounted in the vehicle. This is to avoid any possibility of interference between the system and the device.

RADIO FREQUENCY SPECTRUM REGULATION STATEMENTS

USA

This device complies with part 15 of the FCC Rules. Operation is subject to the following two conditions:

- This device may not cause harmful interference, and
- this device must accept any interference received, including interference that may cause undesired operation.

Canada

IC-RSS-210:
Operation is subject to the following two conditions:

- This device may not cause interference, and
- this device must accept any interference, including interference that may cause undesired operation of the device.

The key system transmitter frequency approval numbers for the USA and Canada are a follows:

USA FCC ID:	KOBJTF10A
	KOBJLR09A
	KOBJBG10A
	KOBJBG10B
Canada IC:	3521A-JTF10A
	3521-JLR09A
	3521-JBG10A
	3521-JBG10B
Model Number:	AH22-15K601A
	AH42-15K602-A
	AH22-19H440 (PEPS)
	AH42-19H440 (Passive Start only)

Note: *The manufacturer is not responsible for any radio interference caused by unauthorized modifications to this equipment. Changes or modifications not expressly approved by the party responsible for compliance could void the user's authority to operate the equipment.*

NOTICE

The Smart Key may suffer interference from other legal users of the this radio frequency band, such as radio amateurs, medical equipment, remote controls or alarm systems. To lock or unlock the vehicle in such a situation, either use a key or operate the key transmitter as close to the security antenna as possible.

BATTERY WARNING SYMBOLS



Do not allow any naked flames, or other sources of ignition near the battery as the battery may emit explosive gasses.



Ensure that when working near, or handling the battery, suitable eye protection is worn. This will reduce the risk of eye damage caused by acid splashes.



To prevent risk of injury, do not allow children near the battery.



Be aware that the battery may emit explosive gasses.



The battery contains acid which is extremely corrosive, and toxic.

CALIFORNIA PROPOSITION 65 WARNING

⚠WARNING

Battery posts, terminals and related accessories contain lead and lead compounds known to the State of California to cause cancer and birth defects or other reproductive harm. Wash hands after handling.

BATTERY HANDLING

⚠DANGER

If swallowed, battery fluid can be fatal. Seek medical assistance immediately.

⚠WARNING

Do not allow battery fluid to contact your skin or eyes. It is both toxic and corrosive which can result in severe injuries. If battery fluid comes into contact with your eyes, skin or clothes, you should remove the affected clothing and flush the skin/ eyes with plenty of water. Seek medical assistance immediately.

⚠WARNING

Do not connect any 12 volt equipment directly to the battery terminals. Doing so may cause a spark, which can result in an explosion.

⚠WARNING

The cell plugs and vent pipe must be in place at all times when the battery is connected to the vehicle. Ensure that the vent pipe is clear of obstructions and not kinked. Failure to do so may cause a pressure build up in the battery, resulting in an explosion.

⚠WARNING

Do not expose the battery to a naked flame or spark as the battery produces explosive, flammable gas.

⚠WARNING

Never jump start, boost charge, or try to start a vehicle with a frozen battery. Doing so can result in an explosion.

⚠WARNING

Remove all metal jewelry before working on or near the battery, and never allow metal objects or vehicle components to come into contact with the battery terminals.

NOTICE

Do not allow battery fluid to come into contact with fabrics or painted surfaces. If battery fluid comes into contact with any surface, the surface should be washed down immediately with plenty of clean water.

Your vehicle is fitted with a low maintenance battery.

In hot climates more frequent checks of the battery fluid level and condition are required. If necessary, the battery cells can be topped up using distilled water.

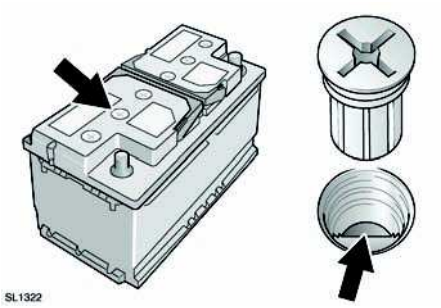

Unscrew the six cell plugs and store carefully.

Check that the surface of the battery fluid is level with the plastic level indicator. If necessary, top up with distilled water, but never overfill. Refit the six cell plugs.

STARTING A DISABLED VEHICLE USING BOOSTER CABLES

⚠WARNING

Always wear appropriate eye protection when working with batteries.

⚠WARNING

Make sure both batteries are of the 12 volt type and that the booster cables have insulated clamps and are approved for use with 12 volt batteries.

⚠WARNING

Do not disconnect the discharged battery.

⚠WARNING

Ensure the bodywork of the donor and disabled vehicles do not touch.

NOTICE

Make sure that the slave battery or starting aid is a 12 volt device.

NOTICE

Make sure that the slave battery or starting aid is a 12 volt device and that the clamps are insulated.

NOTICE

Disconnect the booster cables prior to operating any electrical equipment.

Note: *Before connecting booster cables ensure that the battery connections on the disabled vehicle are correct, and that all electrical equipment has been switched off.*

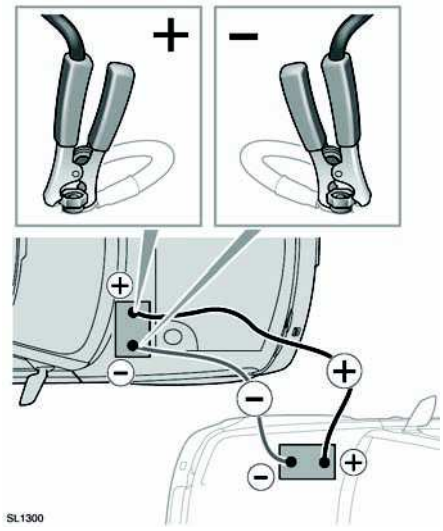

1. Connect one end of the positive (Red) booster cable to the positive terminal on the donor vehicle's battery.
2. Connect the other end of the positive booster cable to the positive terminal on the disabled vehicle's battery.
3. Connect one end of the negative (Black) booster cable to the negative terminal on the donor vehicle's battery.
4. Connect the other end of the negative booster cable to a suitable earth point on the disabled vehicle.

   Note: *Check that all cables are clear of any moving components and that all four connections are secure.*
5. Start the engine of the donor vehicle and allow it to idle for a few minutes.
6. Start the engine of the disabled vehicle.

   Note: *Do not switch on any electrical circuits of the disabled vehicle until after the booster cables are removed.*
7. Allow both vehicles to idle for a few minutes.
8. Switch off the donor vehicle.

⚠WARNING

To avoid serious injury use extreme caution when removing the booster cables as the engine will be running on the previously disabled vehicle. This means that you may be working close to components which are moving at high speed, carry high voltage, or may be hot.

9. Disconnect the negative (Black) booster cable from the previously disabled vehicle.
10. Disconnect the negative (Black) booster cable from the battery of the donor vehicle.
11. Disconnect the positive (Red) booster cable from the previously disabled vehicle.
12. Disconnect the positive (Red) booster cable from the donor vehicle.

STARTING A DISABLED VEHICLE USING A STARTING AID

To start the vehicle using a starting aid or a slave battery, follow the instructions in the sequence given.

1. Connect the positive (Red) booster cable to the positive (+) battery terminal of the disabled vehicle.
2. Connect the negative (Black) booster cable to the negative (-) terminal of the battery.
3. Start the engine and allow it to idle.
4. Disconnect the negative (Black) booster cable from the battery terminal of the vehicle.
5. Disconnect the positive (Red) booster cable from the battery terminal of the vehicle.

REMOVING THE VEHICLE BATTERY

⚠WARNING

Switch the ignition off before disconnecting battery terminals.

⚠WARNING

Always disconnect the negative terminal first and reconnect last.

⚠WARNING

Use caution when lifting the battery out of, or into, the vehicle. It is heavy, and may cause injury when lifting, or if dropped.

⚠WARNING

Do not tip the battery when lifting or moving as tilting the battery more than 45 degrees may damage the battery, and may cause the battery fluid to leak out. Battery fluid is highly corrosive, and toxic.

NOTICE

Do not rest the battery on any part of the vehicle as it may cause damage due to its weight.

NOTICE

Do not run the engine with the battery disconnected. Doing so may damage the charging system.

1. Ensure that all electrical circuits are switched off, all windows are closed and the alarm is disarmed.
2. Remove the Smart Key from the vehicle and wait two minutes to allow the systems to power down fully.
3. Undo the negative clamp then lift the cable and clamp clear of the battery terminal.
4. Undo the positive clamp then lift the cable and clamp clear of the battery terminal.
5. Undo the battery clamp and lift the battery clear of the vehicle.

CHARGING THE VEHICLE BATTERY

⚠WARNING

Ensure that the correct type and rating of charger used. Using an unsuitable charger may damage the battery, and could cause the battery to explode.

⚠WARNING

Always charge the battery in a well ventilated area away from any naked flames, sparks or other ignition sources. During charging the battery can produce a highly explosive and flammable gas.

NOTICE

The battery must be disconnected and removed from the vehicle before charging. Failure to do so could result in damage to the vehicle's electrical system.

NOTICE

Always follow the instructions supplied with the battery charger. Failure to do so may result in damage to the battery.

1. Disconnect the battery and remove it from the vehicle.
2. Connect the battery charger in accordance with the charger manufacturer's instructions.
3. Once the charge is complete switch off the power to the charger.
4. Disconnect the charger cables from the battery.
5. Allow the battery to stand for an hour before connecting to the vehicle. This will allow any explosive gasses to dissipate, and reduce the risk of explosion.

EFFECTS OF DISCONNECTING

Disconnecting the battery can affect a number of vehicle systems, especially if there is insufficient battery power prior to disconnection. For example, the alarm may trigger depending on its state when the battery was disconnected. If the alarm does sound, use the Smart Key in the normal way to disarm the security system. The sunroof may need recalibrating to operate correctly. ABS and DSC will be deactivated. To reactivate, start the engine and turn the steering wheel from full lock left to full lock right.

REPLACEMENT BATTERIES

⚠WARNING

Only install a battery of the same type and rating. Installing an incorrect battery may result in a fire and injury, or damage to the electrical system. If you are in any doubt when installing a battery, seek qualified assistance.

BATTERY DISPOSAL



Used batteries must be disposed of correctly as they contain a number of harmful substances. Seek advice on disposal from your Retailer and/or your local authority.

REFITTING

⚠WARNING

When refitting the battery ensure that no metal objects, or vehicle components, come into contact with the battery terminals.

NOTICE

Ensure that when fitting a battery to the vehicle, the terminals and battery clamps are clean, and lightly coated with petroleum jelly. This will ensure good electrical connections are made, and help to prevent corrosion.

NOTICE

Always follow the battery manufacturers instructions. Failure to do so may result in damage to the vehicle and/or the electrical system.

NOTICE

If the battery leads are connected to the wrong terminals, the electrical system may be damaged.

A new battery should be supplied with plastic terminal covers. Leave the covers in place when fitting the battery, and remove them one at a time to fit the battery cable clamps.

Refitting is an exact reversal of the removal procedure. If you are in any doubt about fitting a battery seek qualified assistance before attempting to fit the battery.

BATTERY MONITORING SYSTEM (BMS)

If excessive battery discharge occurs, the BMS will begin to shut down non-essential electrical systems to protect battery power.

TIRE MARKINGS

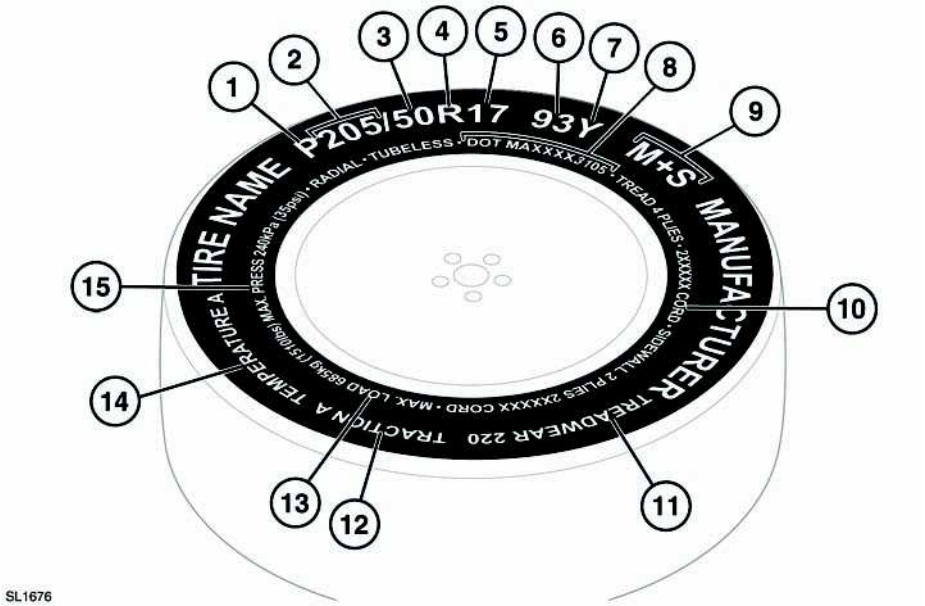

1. **P** indicates that the tire is for passenger vehicle use.
2. The width of the tire from sidewall edge to sidewall edge in millimetres.
3. The aspect ratio, also known as the profile, gives the sidewall height as a percentage of the tread width. So, if the tread width is 205 mm and the aspect ratio is 50, the sidewall height will be 102 mm.
4. **R** indicates that the tire is of Radial ply construction.
5. The diameter of the wheel rim given in inches.
6. The load index for the tire. This index is not always shown.
7. The speed rating denotes the maximum speed at which the tire should be used for extended periods. See **221, SPEED RATINGS**.
8. U.S. DOT Tire Identification Number (TIN). This begins with the letters DOT and indicates that the tire meets all federal standards. The next 2 numbers or letters are the plant code where the tire was manufactured, the last 4 numbers are the date of manufacture. For example, if the number was 3109, the tire was made in the 31st week of 2009. The other numbers are marketing codes used at the manufacturer's discretion. This information can be used to contact consumers if a tire defect requires a recall.

9. **M+S** or **M/S** indicates that the tire has been designed with some capability for mud and snow.
10. The number of plies in both the tread area, and the sidewall area, indicates how many layers of rubber coated material make up the structure of the tire. Information is also provided on the type of materials used.
11. Wear rate indicator. A tire rated at 400 for example, will last twice as long as a tire rated at 200.
12. The traction rating grades a tire's performance when stopping on a wet road surface. The higher the grade, the better the braking performance. The grades, from highest to lowest are; **AA**, **A**, **B** and **C**.
13. The maximum load which can be carried by the tire.
14. Heat resistance grading. The tire's resistance to heat is grade A, B or C, with A indicating the greatest resistance to heat. This grading is provided for a correctly inflated tire, which is being used within its speed and loading limits.
15. The maximum inflation pressure for the tire. This pressure should not be used for normal driving.

SPEED RATINGS

Rating	Speed mph (km/h)
Q	99 (160)
R	106 (170)
S	112 (180)
T	118 (190)
U	124 (200)
H	130 (210)
V	149 (240)
W	168 (270)
Y	190 (300)

TIRE CARE

⚠WARNING

Do not drive the vehicle if a tire is damaged, excessively worn, or incorrectly inflated. A tire in such condition may catastrophically fail and cause an accident.

⚠WARNING

Avoid contaminating the tires with vehicle fluids, as they may damage the tire and cause a tire failure, which may result in an accident.

⚠WARNING

Avoid spinning the wheels. The forces released can damage the structure of the tire, and cause it to fail.

⚠WARNING

If wheel spin is unavoidable due to a loss of traction (in deep snow for example), do not exceed the 30 mph (50 km/h) point on the speedometer. Do not allow anyone to stand near, or directly behind a tire that might spin.

⚠WARNING

Do not exceed the maximum pressure stated on the sidewall of the tire.

Note: *Tire condition should be checked after the vehicle has been used off-road. As soon as the vehicle returns to a normal, hard, road surface, stop and check for tire damage.*

All of the vehicle's tires (including the spare) should be checked regularly for damage, wear and distortion. If you are in any doubt about the condition of a tire, have it checked immediately by a tire repair center or your Retailer.

TIRE PRESSURES

⚠WARNING

Never drive your vehicle if the tire pressures are incorrect. Under-inflation causes excessive flexing and uneven tire wear. This can lead to sudden tire failure. Over-inflation causes harsh ride, uneven tire wear and poor handling.

⚠WARNING

Pressure checks should only be carried out when the tires are cold, and the vehicle has been stationary for more than three hours. A hot tire at or below recommended cold inflation pressure is dangerously under-inflated.

⚠WARNING

Under-inflation also reduces fuel efficiency and tire tread life and may affect the vehicle's handling and stopping ability.

⚠WARNING

If the vehicle has been parked in strong sunlight, or used in high ambient temperatures do not reduce the tire pressures. Move the vehicle into the shade and allow the tires to cool before rechecking the pressures.

TIRE PRESSURE LABEL (USA only)

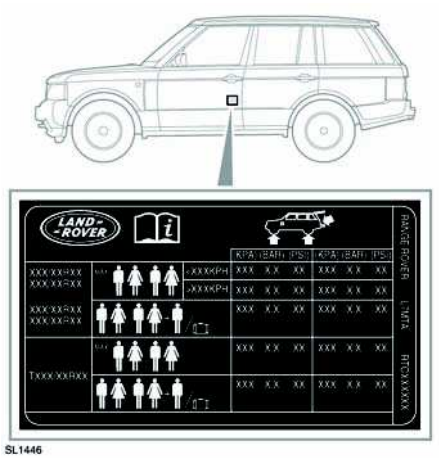

The recommended tire pressures are listed on a label located in the driver's door opening.

These pressures provide optimum ride and handling characteristics for all normal operating conditions.

The label contains the following information:

- The maximum number of occupants, divided between the front and rear of the vehicle.
- The vehicle capacity weight, which includes the weight of the driver, passengers and cargo.
- Cold inflation pressures for the front, rear and spare tires.
- The size of the tires with which the vehicle was originally equipped.

Note: *The label must not be changed, even if different wheels are fitted at a later stage.*

CHECKING THE TIRE PRESSURES

⚠WARNING

All tire pressures, including the spare, should be checked regularly using an accurate pressure gauge, when the tires are cold. Failure to properly maintain your tire pressures could increase the risk of tire failure, resulting in a loss of vehicle control and potential personal injury.

Check the tires, including the spare, for condition and pressure on a weekly basis and before long journeys.

If tire pressures are checked while the vehicle is inside a protected covered area (e.g. a garage) and subsequently driven in lower outdoor temperatures, tire under-inflation could occur.

A slight pressure loss occurs naturally with time. If this exceeds 0.14 bar (2 psi, 14 kPa) per week, have the cause investigated and rectified by qualified personnel.

If it is necessary to check tire pressures when the tires are warm, you should expect the pressures to have increased by up to 0.3 - 0.4 bar (4 - 6 psi, 30 - 40 kPa). Do not reduce the tire pressures to the cold inflation pressure under these circumstances. Allow the tires to cool fully before adjusting the pressures.

The following procedure should be used to check and adjust the tires pressures.

1. Remove the valve cap.
2. Firmly attach a tire pressure gauge/inflator to the valve.
3. Read the tire pressure from the gauge and add air if required.
4. If air is added to the tire, remove the gauge and re-attach it before reading the pressure. Failure to do so may result in an inaccurate reading.
5. If the tire pressure is too high, remove the gauge and allow air out of the tire by pressing the center of the valve. Refit the gauge to the valve and check the pressure.
6. Repeat the process, adding or removing air as required, until the correct tire pressure is reached.
7. Refit the valve cap.

TIRE VALVES

Keep the valve caps screwed down firmly to prevent water or dirt entering the valve. Check the valves for leaks when checking the tire pressures.

PUNCTURED TIRES

⚠WARNING

Do not drive the vehicle with a punctured tire. Even if the punctured tire has not deflated, it is unsafe to use, as the tire may deflate suddenly at any time.

REPLACEMENT TIRES

⚠WARNING

Always fit replacement tires of the same type, and wherever possible, of the same make and tread pattern.

⚠WARNING

If the use of tires not recommended by Land Rover is unavoidable, ensure that you read, and fully comply with, the tire manufacturer's instructions.

Ideally, tires should be replaced in sets of 4. If this is not possible, replace the tires in pairs (both front or both rear). When tires are replaced, the wheels should always be re-balanced and alignment checked.

PRESSURE COMPENSATION FOR AMBIENT TEMPERATURE CHANGES

A colder ambient local temperature will lower pressure within the tire. Sidewall height will decrease and tire shoulder wear will increase with the potential for tire failure. Vehicle dynamics could also be adversely affected.

Tire pressures can be adjusted to compensate before the start of the journey. Alternatively, tire pressures can be adjusted when the area of lower ambient temperature is reached.

In this situation, the vehicle must be left in the ambient local temperature for at least one hour before tire pressure is adjusted.

To compensate for colder ambient temperatures, tire pressures should be increased by 2 psi (0.14 bar, 14 kPa) for each 18°F (10°C) decrease.

Note: *Ensure that correct tire pressures are maintained when moving to areas of differing ambient temperature.*

FLAT SPOTS DUE TO LONG TERM PARKING

In order to minimise flat spotting, tire pressures can be increased to the maximum as stated on the tire sidewall, for the period when the vehicle is stationary. Tires must be returned to the specified running pressures before driving.

AGE DEGRADATION

Tires degrade over time due to the effects of ultraviolet light, extreme temperatures, high loads, and environmental conditions. It is recommended that all tires, including the spare, are replaced at least every six years, but they may require replacement more frequently.

USING WINTER TIRES

If winter tires are fitted to the vehicle, the tire manufacturer's instructions must be followed. Pay particular attention to the correct tire pressures and the maximum speed that the vehicle can be driven at.

Winter tires must be fitted on all four wheels. See **WHEELS AND TIRES** (page 212).

USING TRACTION DEVICES

⚠WARNING

Only use traction devices only in heavy snow conditions, on hard road surfaces.

⚠WARNING

Dynamic Stability Control (DSC) must be switched off when using traction devices.

⚠WARNING

Never exceed 30 mph (50 km/h) when traction devices are fitted.

⚠WARNING

Never fit traction devices to a temporary use spare wheel.

Land Rover approved traction devices may be used to improve traction on a hard road surface in heavy snow conditions. They should not be used in off-road conditions.

If it becomes necessary to fit traction devices, the following points must be observed:

- **Rear wheels:** Snow chains can be fitted to 19 inch rear wheels.
- **Front wheels:** Single sided Spike-spyder traction devices can be fitted only to 20 inch front wheels.
- The wheels and tires fitted must conform to the specifications of the original equipment.

- Only Land Rover approved traction devices should be used on the vehicle. Only Land Rover approved traction devices have been tested to ensure that they do not cause damage to the vehicle. Contact your Land Rover Retailer for information.
- Fit traction devices in pairs on the same axle.
- Always read, understand and follow the traction device manufacturer's instructions. Pay particular attention to the maximum speed and fitting instructions.
- Avoid tire/vehicle damage, by removing the traction devices as soon as the conditions allow.

UNITED STATES DEPARTMENT OF TRANSPORTATION - UNIFORM TIRE QUALITY GRADES

The following information relates to the tire grading system developed by the National Highway Safety Administration which will grade tires by tread wear, traction and temperature performance.

Note: *Tires that have deep tread and winter tires, are exempt from these markings requirements.*

Quality grades can be found, where applicable, on the tire sidewall between the tread shoulder and maximum section width.

For example: **Treadwear 200 Traction AA Temperature A**.

In addition to the markings requirements, passenger care tires must conform to Federal Safety Requirements.

TREAD WEAR

The tread wear grade is a comparative rating based on the wear rate of the tire when tested under controlled conditions on a specified government test course. For example, a tire graded **150** would wear one and a half (1½) times as well on the government course as a tire graded **100**.

The relative performance of tires depends upon the actual conditions of their use, however, and may depart significantly from the norm due to variations in driving habits, service practices and differences in road characteristics and climate.

NOTICE

If tread wear is uneven across the tire, or a tire wears excessively, the vehicle should be checked by your Land Rover Retailer/ Authorized Repairer as soon as possible.



When the tread has worn down to approximately 2 mm, wear indicators start to appear at the surface of the tread pattern. This produces a continuous band of rubber across the tread as a visual reminder.

⚠WARNING

Wear indicators show the minimum tread depth recommended by the manufacturers. Tires which have worn to this point will have reduced grip and poor water displacement characteristics.

Note: *Local legislation may determine a greater tread depth to that shown by the tire wear indicators. It remains the driver's responsibility to ensure the tread depth meets the local legal requirement. Do not rely on the tread wear indicators alone.*

TRACTION

The traction grades, from the highest to lowest are **AA**, **A**, **B** and **C**. The grades represent the tire's ability to stop on wet pavement as measured under controlled conditions on specified government test surfaces of asphalt and concrete. A tire marked C may have poor traction performance.

⚠WARNING

The traction grade assigned to this tire is based on straight-ahead braking traction tests and does not include acceleration, cornering, hydroplaning, or peak traction characteristics.

TEMPERATURE

The temperature grades are **A** (the highest), **B**, and **C,** representing the tire's resistance to the generation of heat and its ability to dissipate heat when tested under controlled conditions on a specified indoor laboratory test wheel.

Sustained high temperature can cause the material of the tire to degenerate and reduce tire life, and excessive temperature can lead to sudden tire failure.

The grade **C** corresponds to a level of performance which all passenger car tires must meet under the Federal Motor Vehicle Safety Standard No. 109.

Grades **B** and **A** represent higher levels of performance on the laboratory test wheel than the minimum required by law.

⚠WARNING

The temperature grade for this tire is established for a tire that is properly inflated and not overloaded. Excessive speed, underinflation, or excessive loading, either separately or in combination, can cause heat buildup and possible tire failure.

TIRE GLOSSARY

lbf/in^2 or psi

Pounds per square inch, an imperial unit of measure for pressure.

kPa

Kilo Pascal, a metric unit of measure for pressure.

Cold tire pressure

The air pressure in a tire which has been standing in excess of 3 hours, or driven for less than 1 mile.

Maximum inflation pressure

The maximum pressure to which the tire should be inflated. This pressure is given on the tire side wall in lbf/in^2 (psi) and kPa.

Note: *This pressure is the maximum allowed by the tire manufacturer. It is not the pressure recommended for use.*

Curb weight

The weight of a standard vehicle, including a full tank of gasoline, any optional equipment fitted, and with the correct coolant and oil levels.

Gross Vehicle Weight (GVW)

The maximum permissible weight of a vehicle with driver, passengers, load, luggage and equipment.

Accessory weight

The combined weight (in excess of those items replaced) of items available as factory installed equipment.

Productions options weight

The combined weight of options installed which weigh in excess of 3lb (1.4 kg) more than the standard items that they replaced, and are not already considered in curb or accessory weights. Items such as heavy duty brakes, high capacity battery, special trim etc.

Vehicle capacity weight

The number of seats multiplied by 150 lb (68 kg) plus the rated amount of load/luggage.

Maximum loaded vehicle weight

The sum of curb weight, accessory weight, vehicle capacity weight, plus any production option weights.

Rim

The metal support for a tire, or tire and tube, upon which the tire beads are seated.

Bead

The inner edge of a tire that is shaped to fit to the rim and form an air tight seal. The bead is constructed of steel wires which are wrapped, or reinforced, by the ply cords.

STEPS FOR DETERMINING CORRECT LOAD LIMIT

⚠WARNING

Do not exceed the vehicle capacity weight (the total weight of driver, passengers and cargo) given on the tire information label.

1. Locate the statement “The combined weight of occupants and cargo should never exceed XXX kg or XXX pounds” on your vehicle’s placard.
2. Determine the combined weight of the driver and passengers that will be riding in your vehicle.
3. Subtract the combined weight of the driver and passengers from XXX kilograms or XXX pounds.
4. The resulting figure equals the available amount of cargo and luggage load capacity. For example, if the “XXX” amount equals 1400 lbs. and there will be five 150 lb. passengers in your vehicle, the amount of available cargo and luggage load capacity is 650 lbs.

   (1400 - 750 (5 x 150) + 650 lbs).
5. Determine the combined weight of luggage and cargo being loaded on the vehicle. That weight may not safely exceed the available cargo and luggage load capacity calculated in Step 4.
6. If your vehicle will be towing a trailer, load from your trailer will be transferred to your vehicle. Consult this manual to determine how this reduces the available cargo and luggage load capacity of your vehicle.

The number and weight of passengers will affect the cargo and luggage capacity. In the example above, the cargo and luggage load capacity is 650 lb. However, if fewer passengers ride in the vehicle, the luggage load capacity will increase. If this vehicle carries three 150 lb passengers, the cargo and luggage load capacity will increase to 960 lb:

(3 x 150 = 450 lb, and 1400 - 450 + 950 lb).

If the passengers weigh more, the cargo and luggage load capacity will decrease.

⚠WARNING

The weight of accessories must also be subtracted from the cargo and luggage load capacity. If you are unsure of the weight of any accessories fitted to your vehicle, contact your Land Rover Retailer/ Authorized Repairer.

⚠WARNING

Overloading the vehicle will have an adverse affect on braking and handling characteristics, which could compromise your safety. Overloading a vehicle may also cause tire damage or failure. Never overload your vehicle.

PASSENGER COMPARTMENT FUSE BOX

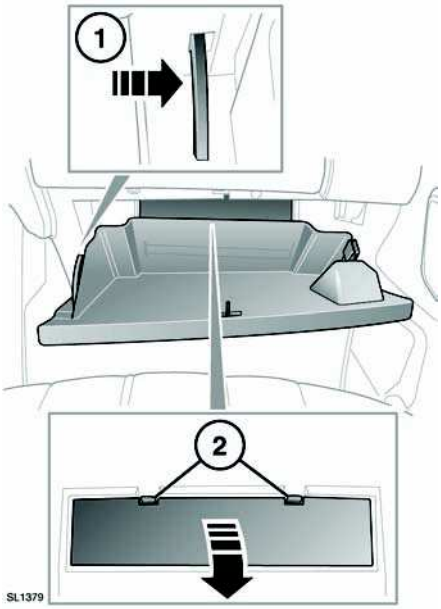

1. Support stay.
2. Fuse box cover catches.

To access the passenger compartment fuse box, open the lower glove box, push the support stay to the right and lower the glove box into the service position.

Press down on the fuse box cover catches and pull towards you. Put the cover in a safe place.

A label on the rear of the cover shows fuse and circuit information.

CHANGING A FUSE

NOTICE

Fit Land Rover approved replacement fuses of the same rating and type, or fuses of matching specification. Using an incorrect fuse, may result in damage to the vehicle's electrical system and can result in a fire.

NOTICE

If the replacement fuse blows after installation, the system should be checked by your Land Rover Retailer/Authorized Repairer.

NOTICE

Always switch off the ignition and the affected electrical circuit, before replacing a fuse.

Note: *Land Rover recommend that relays should be replaced only by qualified persons.*

The fuse removal tweezers are located in the fusebox. Press the tweezers onto the head of a fuse and pull to remove. A break in the wire inside the fuse indicates that the fuse has blown and must be replaced.

There are some spare replacement fuses in the fuse box. See the fuse box cover label.

ENGINE COMPARTMENT FUSE BOX

Fuses and relays located in the engine compartment fuse box should be accessed or replaced only by a qualified technician.

PASSENGER COMPARTMENT FUSES

Fuse number	Rating (Amps)	Fuse color	Circuits protected
1	5	Tan	Interior motion sensor, RF receiver, TPMS receiver
2	-	-	Spare
3	10	Red	Front fog lamps
4	-	-	Spare
5	5	Tan	Dynamic stability control, steering angle sensor
6	5	Tan	Adaptive cruise control, brake light switch
7	20	Yellow	Rear climate seats
8	30	Green	Passenger's electric seat, rear electric seats
9	5	Tan	Electric parking brake
10	5	Tan	Air suspension
11	10	Red	Trailer reverse lamp
12	5	Tan	Reverse lamps
13	-	-	Spare
14	5	Tan	Brake lamps, EMS (Diesel only)
15	30	Green	Heated rear screen
16	5	Red	Spare
17	5	Tan	Keyless entry/start
18	-	-	Spare
19	5	Tan	Engine control module
20	10	Red	Heated steering wheel
21	10	Red	Center console switches, rear climate control, climatic seats
22	5	Tan	Transmission, transfer box, rear differential, center console switches
23	5	Tan	Adaptive front lighting
24	10	Red	Right-hand side lamps, tail lamps
25	10	Red	Left-hand side lamps, tail lamps, license plate lamps
26	-	-	Spare
27	10	Red	Trailer side lamps
28	20	Yellow	Rear climate seats

Fuse number	Rating (Amps)	Fuse color	Circuits protected
29	20	Yellow	Driver's climatic seat/heated seat
30	25	White	Front passenger door
31	5	Tan	Rain sensor
32	25	White	Driver's door
33	20	Yellow	Passenger's climatic seat/heated seat
34	10	Red	Electric gas flap actuator
35	-	-	Spare
36	5	Tan	Battery back-up sounder
37	20	Yellow	Spare
38	15	Blue	Windshield washer
39	25	White	Rear left-hand door
40	5	Tan	Driver's window switch pack, seat switch packs, front seat lumbar, clock
41	5	Tan	Telephone
42	30	Green	Driver's electric seat, rear electric seats
43	15	Blue	Rear screen washer
44	25	White	Rear right-hand door
45	30	Green	Passenger's electric seat, rear electric seats
46	30	Green	Driver's electric seat, rear electric seats
47	20	Yellow	Sunroof
48	30	Green	Trailer connector (battery feed)
49	5	Tan	Adaptive front lighting (right-hand unit)
50	5	Tan	Adaptive front lighting (left-hand unit)
51	5	Tan	Steering wheel switches
52	20	Yellow	Front cigar lighter, center console accessory socket
53	-	-	Spare
54	-	-	Spare
55	20	Yellow	Auxiliary power socket - rear
56	10	Red	Air bag SRS
57	10	Red	Interior lamps, battery saver circuits
58	30	Green	Deployable sidestep
59	-	-	Spare

Fuses

Fuse number	Rating (Amps)	Fuse color	Circuits protected
60	-	-	Spare
61	10	Red	Instrument panel
62	10	Red	Climate control ECU
63	20	Yellow	Rear cigar lighter, front auxiliary power socket
64	15	Blue	Audio unit, DVD player, touch screen
65	5	Tan	Surround camera system
66	5	Tan	Diagnostic socket
67	15	Blue	Rear seat entertainment
68	10	Red	Touch screen display, infotainment
69	5	Tan	CD autochanger

REAR LOADSPACE FUSE BOX

The fuse box is located on the right hand side of the loadspace behind the rear loadspace access hatch. Pull the handle to open the panel.

Fuse number	Rating (Amps)	Fuse color	Circuits protected
1	30	Green	Audio system amplifier
2	15	Blue	Adaptive dynamics
3	5	Tan	Parking aid, blind spot monitor, rear view camera
4	10	Red	Rear air conditioning
5	20	Yellow	Air suspension
6	30	Green	Electronic park brake
7	40	Orange	Rear climate seats
8	15	Blue	Trailer
9	-	-	Spare
10	-	-	Spare
11	5	Tan	Glove box
12	-	-	Spare
13	5	Tan	Air suspension compressor
14	15	Blue	Rear blower motor
15	15	Blue	Rear screen wiper
16	5	Tan	Spare
17	-	-	Spare
18	-	-	Spare
19	-	-	Spare
20	30	Green	Rear seat heaters

CHANGING A ROAD WHEEL

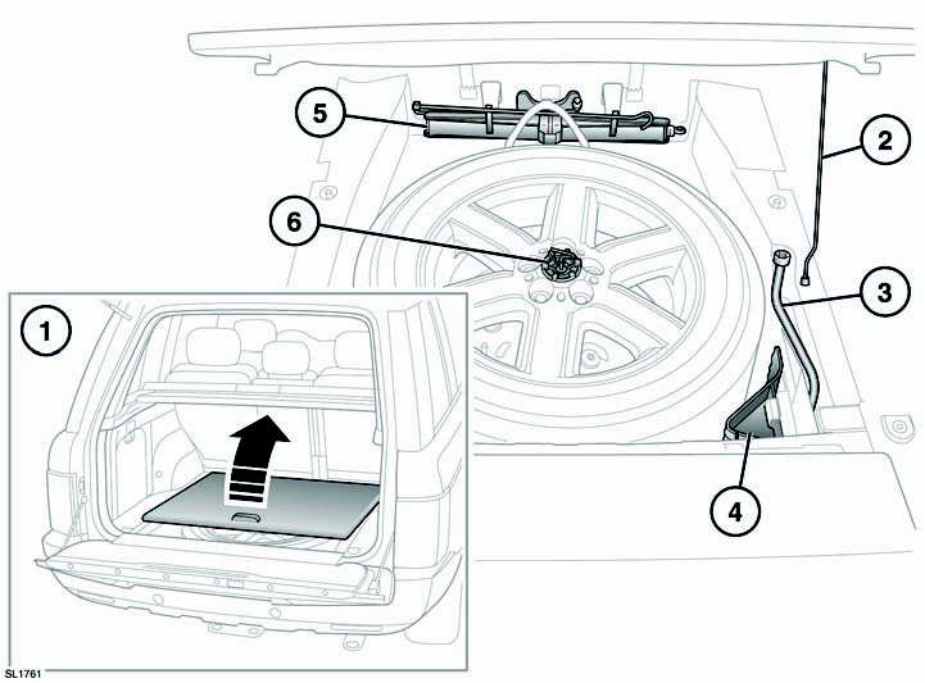

Before accessing the spare wheel well, fold forward the rear edge or the loadspace cover.

1. Floor hatch.
2. Hatch support stay.
3. Wheel nut brace.
4. Wheel chocks.
5. Jack.
6. Wheel retaining bolt.

⚠WARNING

Remove the spare wheel prior to jacking the vehicle, to avoid destabilizing the vehicle when raised.

The spare wheel is heavy and if handled incorrectly may cause injury. Use extreme caution when lifting or maneuvering the wheels.

Secure the spare wheel (or the removed wheel) in the correct position using the retaining bolt.

Always remove the spare wheel before jacking the vehicle.

Note: *Examine the jack occasionally, clean and grease the moving parts, particularly the screw thread, to prevent corrosion.*

DEPLOYABLE SIDE STEPS

If the vehicle is fitted with the optional deployable side steps, DO NOT attempt to jack up the vehicle. The side steps must be removed before jacking can proceed. Refer to the information supplied with the side steps for removal details. Alternatively, contact the appropriate recovery service for assistance.

USING WHEEL CHOCKS

⚠WARNING

Always chock the wheels using suitable wheel chocks. Place the chocks on both sides of the wheel diagonally opposite the wheel to be changed.

⚠WARNING

If jacking the vehicle on a slight slope is unavoidable, place the chocks on the downhill side of the two opposite wheels.

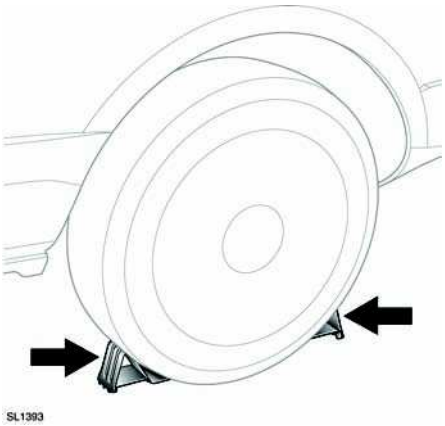

Both chocks must be used. Position them on opposite sides of the wheel and fully push them home against the tire.

Note: *If jacking the vehicle on a slope is unavoidable, place the chocks on the downhill side of both wheels on the axle not being raised.*

REMOVING THE SPARE WHEEL

NOTICE

Do not use power tools to loosen the spare wheel. Doing so may damage the mechanism.

1. Open the spare wheel access hatch in the loadspace area.
2. Turn the wheel retaining bolt counter clockwise until it comes free.
3. Remove the spare wheel.

WHEEL CHANGING SAFETY

Before raising the vehicle or changing a wheel, ensure that you read and comply with the following warnings.

⚠WARNING

Always find a safe place to stop, off the highway and away from traffic.

Switch on the hazard warning lamps.

Apply the parking brake and engage Park (P).

⚠WARNING

Ensure that all passengers and animals are out of the vehicle and in a safe place, away from the highway.

Place a warning triangle at a suitable distance behind the vehicle, facing towards oncoming traffic.

⚠WARNING

Ensure that the vehicle and jack are both on firm level ground. Do not jack the vehicle if it is over a metal grating or manhole cover.

Ensure the air suspension is set to off-road height.

Ensure that the front wheels are in the straight ahead position.

Disconnect trailer from vehicle.

⚠WARNING

Never place anything between the jack and the ground, or between the jack and the vehicle.

Always position the jack from the side of the vehicle, in line with the appropriate jacking point.

Always use the complete jacking lever assembly throughout the tire changing process, to minimize any chance of accidental injury.

Take care when loosening the wheel nuts. The wheel brace may slip off if not properly attached and the wheel nuts may give way suddenly. Either unexpected movement, may cause an injury.

Take care when lifting the spare wheel, and removing the punctured wheel. The wheels are heavy, and can cause injuries if not handled correctly.

⚠WARNING

After wheel changing, always secure tools, chocks, jack and replaced wheel in their correct stowage positions. Such objects, if not properly stowed, can become flying missiles in a crash or rollover, potentially causing injury or death.

OPERATING THE JACK

⚠WARNING

The jack is designed for wheel changing only. Never work beneath the vehicle with the jack as the only means of support. Always use correctly rated vehicle support stands, before putting any part of your body beneath the vehicle.

NOTICE

Only jack up the vehicle using only the jacking points described, or damage to the vehicle could occur.

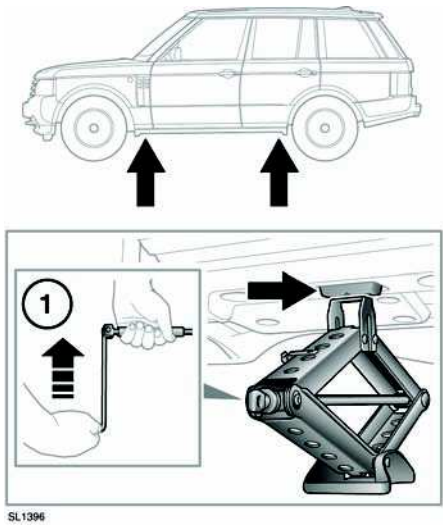

1. Locate the jack under the relevant jacking point.
2. Attach the cranking lever to the jack using the adaptor. Fit the wheel nut brace to the end of the cranking lever.
3. Rotate clockwise to raise until the jack pin locates into the jacking point.

4. Continue raising the vehicle until the wheel is clear of the ground.

WHEEL CHANGING

1. Read and observe the warnings in Wheel Changing Safety.
2. Before rasing the vehicle, use the wheel nut brace to slacken the wheel nuts half a turn counter clockwise.
3. Operate the jack to raise the vehicle.
4. Remove the wheel nuts and place them together where they cannot roll away.
5. Remove the wheel and place to one side. Do not lay the wheel on its face, as this may damage the finish.
6. Fit the spare wheel to the hub.
7. Re-fit the wheel nuts, and lightly tighten them. Ensure that the wheel is making contact with the hub evenly.
8. Ensure that the space under the vehicle is clear of obstructions and lower the vehicle slowly and smoothly.
9. With all wheels on the ground and the jack removed, fully tighten the wheel nuts. The wheel nuts must be tightened in sequence (see illustration) to the correct torque of 140 Nm (103 lb.ft).

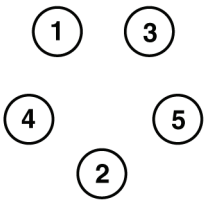

SL1140

Note: *If it is not possible to torque the wheel nuts when a wheel is replaced, they should be set to the correct torque as soon as possible.*

Using a suitable blunt tool, knock the center cap out of the removed wheel. Using hand pressure only, press the center cap into the newly fitted spare.

Check and adjust the tire pressure as soon as possible.

STOWING THE CHANGED WHEEL AND TOOLS

⚠WARNING

Do not stow the wheel while the vehicle is raised on the jack.

After wheel changing, always secure tools, chocks, jack and replaced wheel in their correct stowage positions. Such objects, if not properly stowed, can become flying missiles in a crash or rollover, potentially causing injury or death.

Wheels are heavy and if handled incorrectly may cause injury. Use extreme caution when lifting or maneuvering the wheels.

NOTICE

Do not use power tools to tighten the spare wheel retaining bolt. Doing so may damage the mechanism.

1. Place the wheel into the storage position with the styled face uppermost.
2. Locate and tighten the retaining bolt until the wheel is secure.
3. Ensure that all tools are secured in their correct stowage positions.

RECOVERY

In the event of a breakdown, the vehicle should be recovered to a Land Rover Retailer. They will have the equipment necessary to diagnose and fix the problem.

TRANSPORTING THE VEHICLE

Recovery by trailer is the recommended method for transporting the vehicle.

Always use qualified persons to perform recovery and to ensure the vehicle is secured correctly.

⚠WARNING

Use extreme caution when moving or towing the vehicle. Death or serious injury may occur.

LASHING POINTS

⚠WARNING

The front and rear lashing points must be used only for securing the vehicle during transportation. If they are used for any other purpose, it may result in vehicle damage and serious injury.

NOTICE

When the vehicle is loaded onto a trailer, set the air suspension to Access height. Do this BEFORE securing the vehicle to the trailer. See ***SELECTING ACCESS HEIGHT*** *(page 94). Apply the parking brake and chock the wheels.*

Do not use any other part of the vehicle to secure lashing hooks, ropes or other fixings.

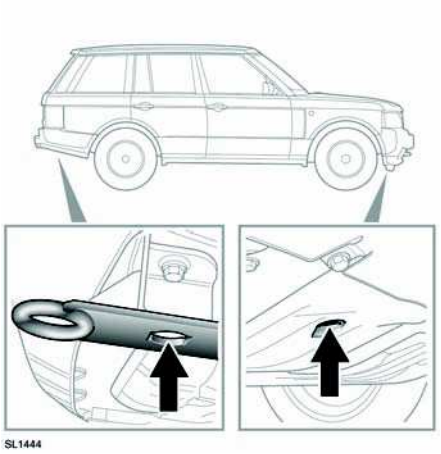

NOTICE

Do not use the front and rear lashing points for towing another vehicle.

FRONT AND REAR TOWING POINTS

⚠WARNING

The towing points at the front and rear of the vehicle are designed for on-road recovery only. If they are used for any other purpose, it may result in vehicle damage and serious injury.

NOTICE

Remove the front towing point cover before driving off-road, to prevent damage or loss.

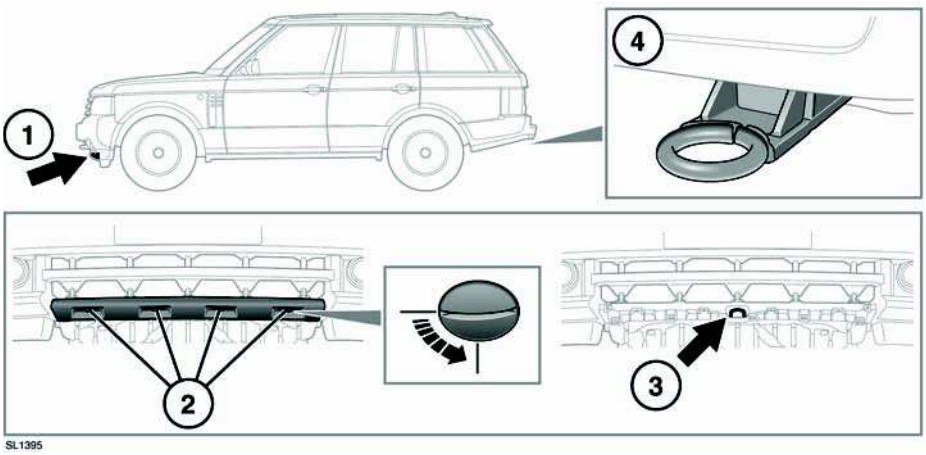

1. The front towing point is located behind a removable cover in the lower front bumper.
2. Rotate each of the fasteners 90 degrees counter clockwise with a coin (or similar).

   Using both hands, remove the cover. Store in a safe place.
3. The towing point is exposed and ready for use.
4. The rear towing point may be used to tow another vehicle if required. There is no cover to remove.

OFF-ROAD RECOVERY

⚠WARNING

If the towing points are to be used for off-road recovery, it is essential that off-road driver training with recovery techniques is undertaken.

Further information on off-road driver training can be found at http://www.landroverexperience.com

TOWING THE VEHICLE ON FOUR WHEELS

⚠WARNING

Do not remove the Smart Key from the vehicle as this will lock the steering column.

⚠WARNING

If the vehicle battery is to be disconnected, the steering column must be unlocked first. It is not possible to unlock the steering column with the battery disconnected.

⚠WARNING

If the engine cannot be used during towing, there will be no power assistance to the braking or steering systems. This will result in much greater effort to steer and stop the vehicle and in a greatly increased stopping distance.

NOTICE

The vehicle must be recovered with all four wheels off the ground, e.g., on a trailer.

NOTICE

If the vehicle must be towed, only tow in a forward direction with all four wheels on the ground. Towing in a reverse direction or with only two wheels on the ground, will cause serious damage to the transmission.

NOTICE

Do not tow the vehicle for more than 30 miles (50km), at a maximum speed of 30mph (50km/h). Towing for a greater distance or at a higher speed, may result in serious damage to the transmission.

NOTICE

Do not tow the vehicle if the gearbox cannot be set in neutral or the rear electronic differential has failed in the locked position.

Your vehicle has a permanent four-wheel drive system and is fitted with a steering lock. The following procedure must be carried out carefully to prevent damage to the vehicle:

1. Remove the front towing eye cover.
2. Secure the towing attachment from the recovery vehicle to the front towing point.
3. With the parking brake applied, switch on the ignition.
4. Apply the foot brake and place the gear lever into neutral.
5. Switch off the ignition and leave the Smart Key in a secure place within the vehicle.
6. The ignition may be switched on to allow operation of indicators, brake lamps etc.
7. Release the parking brake before towing the vehicle.

NOTICE

Leaving the ignition switched on for extended periods will drain the vehicle battery.

AFTER TOWING ON FOUR WHEELS

1. Apply the parking brake.
2. Switch on the ignition and apply the foot brake.
3. Place the auto selector lever in the Park position.
4. Switch off the ignition and remove the Smart Key from the vehicle.
5. Remove the towing attachment and refit the cover to the front towing point.

⚠WARNING

Use extreme caution when detaching towing equipment. Vehicle movement is possible which can result in serious injury.

BEFORE STARTING OR DRIVING

⚠WARNING

If the vehicle is involved in a collision it should be checked by a Land Rover Retailer/Authorized Repairer, or suitably qualified persons, before starting or driving.

EVENT DATA RECORDING

Event data recorders are capable of collecting and storing data during a crash or near-crash event. The recorded information may assist in the investigation of such an event. The modules may record information about both the vehicle and the occupants, potentially including such information as:

- How various systems in your vehicle were operating.
- Whether or not the driver and passenger seat belts were buckled.
- How far, if at all, the driver was pressing the accelerator and/or brake pedal.
- How fast the vehicle was travelling.
- Where the driver was positioning the steering wheel.

These data can help provide a better understanding of the circumstances in which crashes and injuries occur.

Note: *EDR data are recorded by your vehicle only if a non-trivial crash situation occurs; no data are recorded by the EDR under normal driving conditions and no personal data (e.g. name, gender, age and crash location) are recorded. However, other parties, such as law enforcement, could combine the EDR data with the type of personally identifying data routinely acquired during a crash investigation.*

To read data recorded by an EDR, special equipment is required, and access to the vehicle or the EDR is needed. In addition to the vehicle manufacturer, other parties, such as law enforcement, that have the special equipment, can read the information if they have access to the vehicle or the EDR.

LABEL LOCATIONS

Warning labels attached to your vehicle bearing this symbol mean: Do not touch or adjust components until you have read the relevant instructions in the handbook.

Labels showing this symbol indicate that the ignition system utilises very high voltages. Do not touch any ignition components while the starter switch is turned on.

Additional information labels may also be found at the following locations:

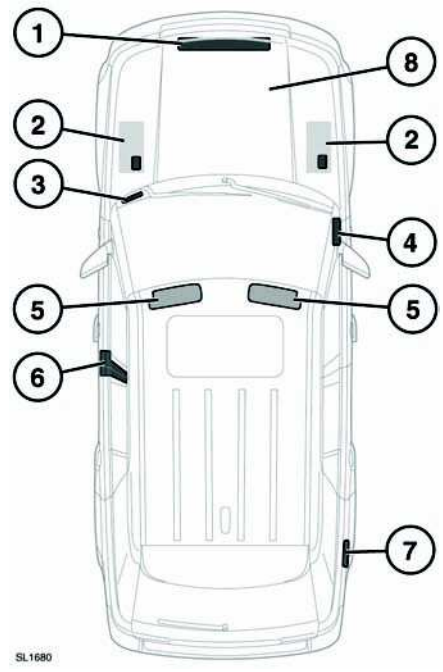

1. Hood locking platform - Air conditioning label
2. Top of battery - Battery warning symbols
3. The VIN is stamped on a plate visible through the lowest part of the left side of the windshield.The number is also stamped into the right side suspension tower.

   Note: *If you need to communicate with a Retailer you may be asked to quote the VIN number.*
4. End of facia (passenger side) - Passenger air bag label.
5. Sun visor - Air bag label, vehicle handling label.
6. Base of B pillar or rear of front door - Tire pressure label, air bag warning label.
7. Inside gas filler flap - Fuel label.
8. Engine numbers are on the right side of the engine block and camshaft cover.

It is important that you are familiar with these subjects to ensure that your vehicle and its features are used safely.

VEHICLE IDENTIFICATION NUMBER (VIN)

The VIN is a unique number which identifies your vehicle. Unlike the vehicle registration number it cannot be transferred and remains with your vehicle for its life.

Numerics

4 x 4 Info 180

A

ABS 96
  Electronic Brake Distribution (EBD) 97
  Emergency Brake Assist (EBA) 96
  steep slopes 96
ACC
  advanced emergency brake assist 111
  automatic low speed switch off 109
  automatic switch off 109
  changing the follow mode gap 108
  detection beam 110
  driving hints 109
  follow mode 107
  forward alert 110
  forward alert warning lamp 110
  malfunction 110
  overriding the speed and follow mode . 108
  resuming follow mode 109
  setting the follow mode gap 107
ACC (Adaptive cruise control) 107
Accessories 197
Adaptive cruise control (ACC) 107
Adaptive front lighting system (AFS) 42
Advanced emergency brake assist 111
AFS 42
Air bag service information 40
Air bag warning lamp 38
Air bags 35
  components 36
  deployment 38
  modifications 186
  obstruction 37
  occupant detection 39
  operation 36
Air conditioning 69
  rear seats 72
Air suspension 93
  access height 94
  adjusting settings 93
  crawl mode 94
  extended off-road height 94
  off-road height 93
  remote operation 95
Alarm activation 13
Alarm deactivation 9
Alternative fuels 183
Antifreeze check 204
Audio
  iPod 131
  overview 120
  portable audio 131
  sound settings 120
  USB devices 131
Auto high beam 42
Autolamps 41
Automatic climate control 69
Automatic transmission
  automatic mode 87
AUX socket 143
Auxiliary connections 143
Auxiliary input (AUX IN) socket 131
Auxiliary input socket 135
Auxiliary power sockets 75

B

Battery care 215
Battery charging 218
Battery warning lamp 84
Battery warning symbols 215
Blind spot monitor 54
  sensor blockage 55
  system fault 55
Bluetooth 153
  adding or changing a telephone 154
  compatibility 153
Boost starting 216
Booster cables 216
Booster cushions 30
Brake fluid check 204
  topping up 205

Brakes
principle of operation 96
Bulb changing 191
Bulb specification chart 211

C

California proposition 65 warning 186
Cancel navigation guidance 173
Cancel navigation voice guidance 173
Capacities 208
Car wash 197
CD autochanger 130
CD autochanger loading 130
CD player
loading a CD 129
main menu 128
MP3 playback 129
play options 129
playing a CD 128
track selection 128
Changing a bulb 191
general information 191
Changing a fuse 229
Changing a road wheel 234
jacking points 236
operating the jack 236
stowing the removed wheel 237
wheel changing safety 235
wheel chocks 235
Changing the vehicle battery 218
battery disposal 219
disconnecting 218
effects of disconnecting 219
refitting 219
replacement batteries 219
Changing the voice system volume 152
Chassis view - 4 x 4 info 180
Child locks 25
Child seats 29
anchor points 33
check list 30
LATCH anchor points 33
positioning 32
safety 30
seat belt locking mechanism 30
tether anchorage points 34
tether straps 34
Cleaning stubborn stains 198
Cleaning the exterior 197
after off-road driving 198
Cleaning the interior 198
air bag module covers 200
audio system 200
instrument panel 200
leather care 199
plastic and cloth 199
seat belts 199
touch screen 200
Climate control 69
rear seats 72
Climatic seats 71
Clock 61
Compass view - 4 x 4 info 180
Connecting auxiliary devices 135
Coolant check 203
Cornering lamps 43
Courtesy delay (headlamps) 41
Courtesy lighting 44
Cruise control 105
engaging 105
increasing speed 105
reducing speed 105
suspending 106
Cup holders 74

D

Daily maintenance checks 187
Data recording 241
service 197
Daylight running lamps 42
Deployable side steps
jacking 235
Dimensions 210
Disability modifications 40, 186

Disarming the alarm
deactivating a triggered alarm 9
unlock button failure 9
Door locks 14
Door mirrors 52
Drive away locking 13
Driving after a collision 241
before starting or driving 241
Drop plate tow bar 83
DVD
formats 139
loading a disc 136
main menu 138
menu selection 138
playing a DVD 139
special features 139
using an alternative audio source 139

E

Electric seats 15
driving position memory 17
easy exit/entry 18
Electric steering column 24
Electric sunroof
calibration 197
reset 197
Electric windows
overriding anti-trap protection 50
Emergency starting 84
Emission control system 86
Engine
rolling restart 86
switching off 85
switching off while moving 85
Engine coolant check 203
topping up 203
Engine data 208
Engine fails to start 85
Engine oil check 202
checking the oil level 202
oil specification 203
topping up 202
Engine oil disposal 189
Event data recording 241
Exterior mirrors 52
adjusting and folding 52
mirror dip when reversing 52
External temperature 61

F

Facia controls 254
Fastening the seat belts 25
Flat spots 224
Fog lamps 41
Follow mode 107
changing the gap 108
overriding the speed 108
resuming 109
setting the gap 107
Forward alert 110
warning lamp 110
Front seat heaters 70
Fuel consumption display 64
Fuel filling 182
octane rating 182
Fuel filling safety precautions 182
Fuel gauge 61
Fuel tank capacity 184
Fuel types 183
Fuse boxes 229
Fuse replacement 229
Fuses 230

G

Garage door opener 57

Garage door transceiver
before programming 57
entry gate programming 59
erase programming 59
information and assistance 59
programming 57
reprogramming a single garage door opener button 58
rolling code device equipment programming 58
Gas cap flap 184
Gas cap flap - emergency release 184
Gas filling 182, 185
alternative fuels 183
octane rating 182
tank capacity 184
Gas tank capacity 184
Gearbox
CommandShift mode 88
drive mode 88
kick-down 88
neutral 87
reverse 88
reverse gear 87
sport mode 88
Gearbox fault 88
Global closing 13
Global opening 9
Gradient acceleration control 113
Gradient release control (GRC) 116

H

HDC 115
Head restraints
front seats 18
rear seats 22
Headlamps 41
high/low beam 41
power wash 47
washers 48
Heated front seats 70
Heated rear seats 72
Heated screens 70
High/low beam 41
Hill descent control 115
Hill start assist 113
Homelink 57
Hood lock 189

I

Ignition
switching off 85
Ignition on 84
Information messages 62
Installing an LATCH child restraint 33
Instrument panel overview 61
Interior lights 44
front 44
rear 44
iPod connection 131

J

Jacking 236
deployable side steps 235
Jacking points around the vehicle 236

K

Keyless start backup 84
Keyless starting 84

L

Label locations 242
Lashing points 238
LATCH
anchor points 33
anchor points installation 33
child seats 33
child seats installation 33
Lighting
interior 44
Lighting control
headlamp courtesy delay 41

Lights 41
adaptive front lighting (AFS) 42
auto high beam 42
autolamps 41
cornering lamps. 43
courtesy lighting 44
daylight running 42
exterior 41
headlamp courtesy delay 41
headlamps 41
high/low beam 41
interior. 44
main switch panel 41
sidelights 41
Load limit 227
Loading the CD autochanger 130
Loadspace cover 78
Loadspace safety net. 80
Locking
child locks 25
drive-away locking. 13
mislock 13
smart key global closing 13
with the smart key 13
Locking and unlocking
from inside the vehicle. 14
master switch 14
Locks
changing the smart key battery 12
Lubricants 208
Luggage anchor points 79
Luggage cover. 78

M

Maintenance
arduous driving 187
daily checks 187
general information 187
hazardous substances 187
safety. 188
technical specifications 208
used oils 189
weekly checks 187
Media hub (portable media) 131
Message center 61
Mirrors
blind spot monitor 54
exterior 52
operation. 52
powerfold 52
reverse auto-dip 52
Modifications
disability 186
MP3 tracks on CD. 129
Multi-point entry. 9

N

Navigation. 160
adding waypoints 166
alternative routes 166
calibrating vehicle position 161
cancel guidance 173
changing waypoints order. 167
deleting a memory point 169
editing memory points 169
entering a destination 163
guidance volume. 161
legals 178
POI categories 170
points of interest (POI) 170
previewing a route 167
previewing POIs 167
previewing whole route. 168
recalling a destination. 165
route changes 166
route preferences 166
screen mode options 163
screen overview 162
setting avoid points. 169
setting preferences 161
storing home location. 170
storing new locations 168
things you need to know. 160
turning on 160
vehicle position error 160

voice control 173
voice control commands 173
voice guidance cancel 173
Navigation off road 171
new route. 171
route options 172
using a stored route. 172
Notepad 151
deleting notes 152
playing notes 152
recording a note 151

O

Occupant detection 39
Octane rating 182
Odometer 64
Off road navigation 171
Off-road driving
wading. 113
Off-road driving guidance 112
Oil check 202
Opening and closing the hood. 189
Owner maintenance. 187

P

Parking aid
principle of operation. 103
sensor care 104
system fault 104
when towing 104
Parking brake
applying. 97
releasing 97
Parking sensors. 103
Parts 197
Parts and accessories 186
Personalising the instrument panel
display 63
Phone 153, 155
Playing a CD 128
Portable audio. 131
browse 133
connecting multiple devices 134
connections 131
controls. 133
repeat 133
search 133
shuffle. 133
skip/scan. 133
source selection 133
touch screen operation 133
track list 133
track search 135
Power seats
driving position memory. 17
easy exit/entry. 18
Power sockets 75
Power steering fluid check 205
topping up. 206
Puddle lamps 44

R

Radio
autostore. 123
main menu 123
PTY (program type) 124
RBDS (radio data system). 124
station search 124
station tuning 124
touch screen controls 123
Rain sensor. 47
Reading lamps 44
Rear loadspace cover 78
Rear seat heaters 72
Rear seats
erecting. 20
folding. 20
head restraints 22
reclining 21

Rear storage area
DVD player 77
fuel flap emergency release 77
rear fuse box 77
tow hitch stowage 77
warning triangle 77
Rear view camera 117
Rear view mirrors 52
Rear window washer 47
Rear window wiper 47
Recommended towing weights 81
Recovering your vehicle 238
Refuelling 182, 185
Remote control
changing the battery 12
Repairing minor paint damage 198
Replacing wiper blades 200
Reporting safety defects 5
vehicle defects 5
Restraints 29
Rolling restart 86
Roof racks 79
RSE
AUX connections 143
AV1 and AV2 143
control from the front seats 142
DVD menu options 147
DVD region codes 149
headphones 142
home menu options 146
listen to menu options 148
remote control 145
remote control unlatching 146
screen features 148
screen format 149
screen icons 146
screen settings 149
supervisor screen 141
turning on 142
watch menu options 147
Running out of gas 183

S

Safety
air bags 35
child locks 25
child seats 29
child seats check list 30
seat belt checks 28
using a telephone 153
wheel changing 235
Sat Nav 160
Satellite navigation 160
Satellite radio
channel update 127
controls 126
reception 127
subscription 127
Scratches and chips 198
Screen heaters 70
Seat belt locking mechanism 30
Seat belt reminder 28
Seat belts 25
fastening a seat belt 25
height adjustment 25
releasing a seat belt 25
safety checks 28
use during pregnancy 25
warning lamp 28
Seat belts care 27
Seats
child seats 29
Service data recording 197
Service interval indicator 61, 62
Settings
touch screen 120
Sidelights 41
Single-point entry 9
Sitting in the correct position 16

Smart key
approach lighting 6
changing the battery 12
emergency key blade 8
failure 9
global closing 13
global opening 9
locking 13
panic alarm 6
single/multipoint entry 9
tailgate release 6
transmitter warning 10
unlocking 6
Snow chains 224
Spare wheel access 234
Spare wheel removal 235
Specifications
accessory wheels and tires 212
Speech activation 150
Speedometer 61
SRS (Supplementary restraint system) . . . 35
Stability 4
Stability control 91
Starting a disabled vehicle 216
Starting problems 85
Steering column adjusting 24
Steering column lock 10, 84
Steering wheel heater 24
Stop navigation guidance 173
Stop navigation voice guidance 173
Stopping the engine 85
Stowing a removed wheel 237
Sun blinds 49
Sun visor lamps 44
Sunroof 49
anti-trap protection 50
blinds 49
operation 49
Supplementary restraints system 35
Surround camera system 117
Switching the ignition on 84
System settings 120

T

Tachometer 61
Tailgate
emergency opening 11
opening 10
Technical specifications
bulbs 211
capacities 208
dimensions 210
engine data 208
lubricants and fluids 208
smart key transmitters 213
weights 209
wheel alignment 210
wheels and tires 212
Telephone 153
Bluetooth 153
call divert 155
call register 157
call volume 155
compatibility 153
continuing a call 156
digit dial 155, 156
ending a call 155
general information 153
incoming calls 156
last number redial 155
last ten calls 157
making a call 155
messages 157
missed calls 157
new nametags 159
pairing 154
phonebook 156
previous calls 157
safety 153
scratchpad 156
status 155
touch screen operation 155
voice commands 158
voice control 157
voice mail 155
voice nametags 158

Temperature gauge 61
Terrain response
before driving off-road. 112
driver override options 113
operating 112
Tether straps for child seats 34
Tires
accessory tire pressures 212
age degradation 224
correct load limit 227
flat spots 224
for winter use 224
glossary of terms. 226
markings 220
pressure compensation for temperature changes 224
pressures. 222
punctures 223
quality grades 225
replacing 223
speed ratings 221
temperature grading 226
tire care 221
traction grading 226
tread wear grading. 225
valves 223
Touch screen
portable media controls. 133
telephone controls. 155
Touch screen care 120
Touch screen controls for 4 x 4 info - Chassis view 180
Touch screen settings 120
audio sound. 120
system. 120
vehicle 120
voice 120
Tow assist camera. 117
Tow bar
drop plate 83
Tow point cover removal 238
Towing a trailer. 81
electrical connection 81
essential checks 82
levelling. 81
recommended weights 81
Towing points. 238
front and rear towing eyes 238
Towing your vehicle 238
TPMS
full size spare wheel 101
operation. 100
replacement sensor 102
Traction control 92
Traction devices 224
Trailer stability assist 92
Trailer target sticker 117
Transfer gearbox range changing 88
Transmission
automatic mode 87
CommandShift mode 88
drive mode 88
kick-down 88
neutral. 87
reverse 88
reverse gear 87
sport mode 88
Transmission fault 88
Trip computer. 64
Trip distance. 64
Trip recorder. 61
Trip recorder memory. 64

U

Unlocking the vehicle 6
USB devices 131
Using booster cables 216
Using cruise control 105
resuming a set speed 106
Using HDC 115
operation. 115
selecting 115
Using seat belts during pregnancy 25

Using stability control 91
deactivating DSC 91
DSC 91
reactivating DSC 91
Using the smart key
global opening 9
single/multipoint entry 9
unlocking 6
Using traction control 92
Electronic Traction Control (ETC) 92

V

Valet mode 121
Vehicle build date plate 242
Vehicle identification number (VIN) 242
Vehicle information and settings menu . . . 63
Vehicle label locations 242
Vehicle recovery 238
lashing points 238
off-road 239
on a trailer 238
towing on four wheels 239
towing points 238
Vehicle settings 120
Vehicle settings menu 63
Vehicle stability 4
VIN locations 242
Voice control 150
command list 150
help mode 150
navigation commands 173
notepad 151
operating guide 151
session interruptions 151
telephone 157
tutorial 151
voice button 150
volume 152
Voice mail 155
Voice settings 120

W

Wading depth 113
Warning lamps 65
battery warning 84
forward alert 110
primary warnings 65
seat belt 28
secondary warnings 65
status check at ignition on 65
system status 65
Warning messages 62
Washer fluid check 207
topping up 207
Washers
headlamp 48
rear 47
Washing 197
Weekly maintenance checks 187
Weights 209
Wheel alignment specifications 210
Wheel changing
safety 235
Wheel chocks 235
Wheels
accessory specifications 212
safety when changing a wheel 235
Wheels and tires
technical specifications 212
Windows 49
anti-trap protection 50
one-touch operation 50
operation 49
window isolator 49
Windshield washer jets
blocked jets 201
Windshield wipers 46
operation 46
rain sensor 47
single wipe 46
speed-dependent mode 47
Wiper blade replacement 200

Wipers 46
intermittent variable delay 47
rain sensor. 47
rear 47
speed-dependent mode 47

CONTROLS

1. Map reading lamp switch.
2. Main interior lamp switch.
3. Sunroof open/close switch.
4. Air bag status indicator.
5. Adaptive cruise control gap setting.
6. High beam/Turn signals/Trip computer switch.
7. Audio system control.
8. Instrument panel and message center.
9. Vehicle information control.
10. Wiper/washer controls.
11. START/STOP button.
12. Master locking switch.
13. Hazard warning lamp switch.
14. Display/touch screen.
15. Audio system and controls.
16. Glove box switches.
17. Heater/air conditioning control.
18. Tailgate opener.
19. Parking aid switch.
20. Transfer gear switch.
21. Electric parking brake.
22. Hill descent control (HDC) switch.
23. Air suspension switch.
24. Terrain response control.
25. Main gearbox selector
26. Rear climate control master switch.
27. Dynamic stability control switch.
28. Telephone controls.
29. Voice recognition switch.
30. Heated steering wheel switch.
31. Horn switches.
32. Cruise control switches.
33. Electric steering column adjuster.
34. Hood release.
35. Instruments, clock and switches illumination dimmer control.
36. Rear fog lamp switch.
37. Front fog lamp switch.
38. Lamps master switch.
39. Electric mirror controls.
40. Mirror selector switch.
41. Electric window controls.
42. Electric window rear isolator switch.
43. Power folding mirrors.
44. Air suspension access height switch.

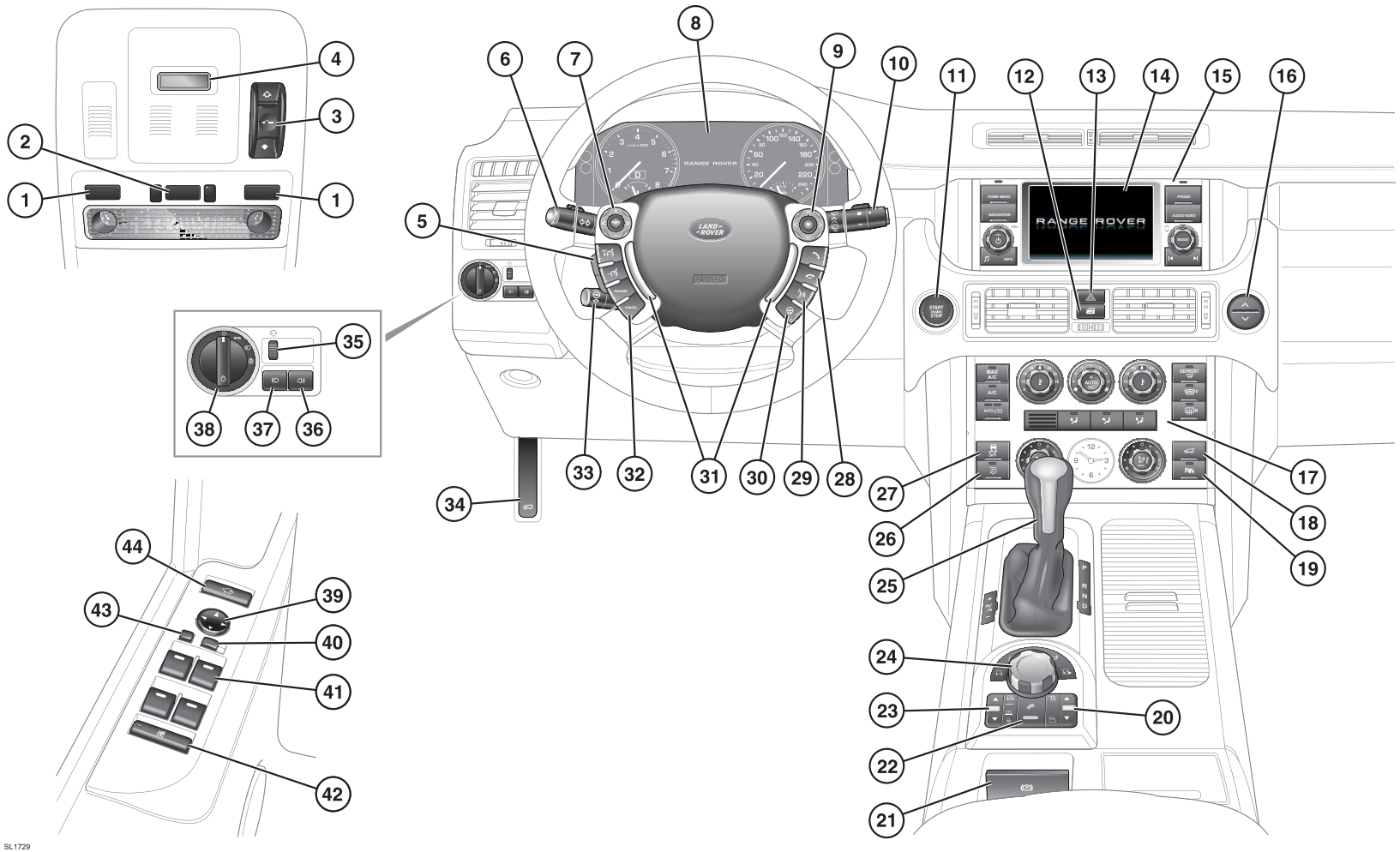
1
2
3
4
5
6
7
8
9
10
11
12
13
14
15
16
17
18
19
20
21
22
23
24
25
26
27
28
29
30
31
32
33
34
35
36
37
38
39
40
41
42
43
44
RANGE ROVER
SL1729

RANGE ROVER

QUICK START GUIDE



SOME FEATURES MAY NOT BE FITTED TO YOUR VEHICLE.

2 VEHICLE ACCESS
3 DRIVER CONTROLS
4 COMFORT ADJUSTMENTS
6 CLIMATE CONTROL
7 ENGINE START
8 WARNING LAMPS
10 TRANSMISSION
10 CRUISE CONTROL
11 AIR SUSPENSION
11 TERRAIN RESPONSE
12 AUDIO SYSTEM WITH TOUCH SCREEN
14 NAVIGATION
15 BLUETOOTH TELEPHONE
16 GAS STATION INFORMATION

RANGE ROVER

Range Rover Smart Key

Press once to lock the vehicle and arm only the exterior (perimetric) alarm.

Press and hold to close any open windows and lock all doors (Global closing).

Multi-point entry - Press once to disarm the alarm, unlock the doors and unlock the tailgate.

Press and hold to unlock all doors and open the windows (Global opening).

Press once to switch the headlamps on for 30 seconds. Press again to switch off.

Press to unlock and release the tailgate. If the alarm is armed, it will be inhibited while the tailgate is open.

Press and hold for three seconds to activate/cancel the panic alarm.

Emergency key release

Press the release button then slide the side section out. Pull up the keyblade. Use the blade to prise off the lock cover on the driver's door.



Insert the key into the exposed lock and turn towards the front of the vehicle, then release it to unlock.

If the security system was previously armed with the Smart Key, when the door is unlocked the alarm will sound. To disarm the alarm, press the unlock button on the Smart Key or press the **START STOP** button with the Smart Key inside the vehicle.

Unlocking mode alternatives

Single-point entry allows only the driver's door to unlock with a single press. A second press unlocks all other doors and tailgate.

Multi-point entry will unlock all doors and tailgate with a single press.

To change between modes, with the vehicle unlocked, press and hold the lock and unlock buttons simultaneously for three seconds. The hazard warning lamps will flash to confirm the change.

Operating note

If the Smart Key fails to operate, hold it under the steering column in the indicated position. Start the engine as normal (see page 7). The Smart Key can now be removed.

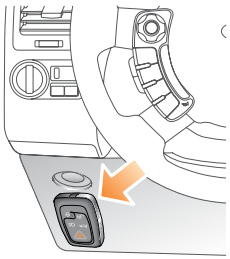

Central door locking

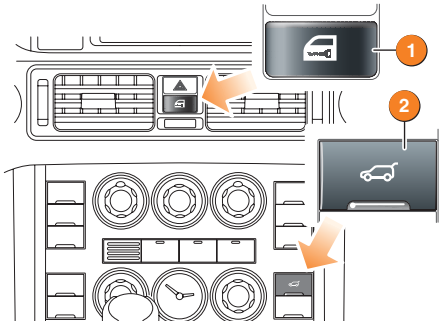

1. Press to lock/unlock all doors.
2. Press to release the tailgate.

Drive away locking

If enabled, all apertures will automatically lock when the vehicle speed exceeds 5mph (8 km/h).

The feature can be turned off or on in the **Vehicle Set-up** area accessed via the instrument pack menu.

Operating note

If the vehicle has already been locked with the Smart Key, the master unlocking switch will not release the locks.

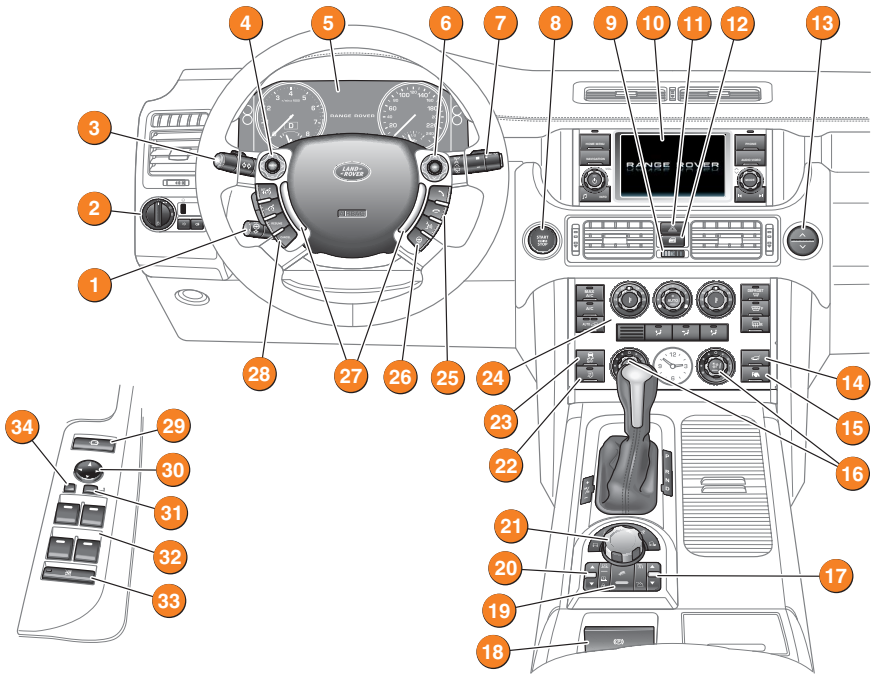

1. Steering column adjuster
2. Exterior lamps and dimmer control
3. Headlamps, turn signals and trip computer
4. Audio system control
5. Instrument panel, warning lamps and message center
6. Settings menu control
7. Wipers and washers
8. Start/stop button
9. Face temperature control
10. Touch screen
11. Hazard warning
12. Master locking switches
13. Upper and lower glovebox release
14. Tailgate release
15. PDC (Park Distance Control)
16. Climatic seat controls
17. High/Low range transmission
18. Electric parking brake
19. HDC (Hill Descent Control)
20. Air suspension control
21. Terrain response control
22. Rear climate control on/off
23. DSC (Dynamic Stability Control)
24. Climate control
25. Telephone and voice recognition controls
26. Heated steering wheel
27. Horn
28. Cruise control and adaptive cruise control
29. Air suspension access height
30. Mirror adjuster
31. Mirror selector
32. Window controls
33. Rear windows isolation switch
34. Power folding mirrors

RANGE ROVER

Range Rover Smart Key

Press once to lock the vehicle and arm only the exterior (perimetric) alarm.

Press and hold to close any open windows and lock all doors (Global closing).

Multi-point entry - Press once to disarm the alarm, unlock the doors and unlock the tailgate.

Press and hold to unlock all doors and open the windows (Global opening).

Press once to switch the headlamps on for 30 seconds. Press again to switch off.

Press to unlock and release the tailgate. If the alarm is armed, it will be inhibited while the tailgate is open.

Press and hold for three seconds to activate/cancel the panic alarm.

Emergency key release

Press the release button then slide the side section out. Pull up the keyblade. Use the blade to prise off the lock cover on the driver's door.



Insert the key into the exposed lock and turn towards the front of the vehicle, then release it to unlock.

If the security system was previously armed with the Smart Key, when the door is unlocked the alarm will sound. To disarm the alarm, press the unlock button on the Smart Key or press the **START STOP** button with the Smart Key inside the vehicle.

Unlocking mode alternatives

Single-point entry allows only the driver's door to unlock with a single press. A second press unlocks all other doors and tailgate.

Multi-point entry will unlock all doors and tailgate with a single press.

To change between modes, with the vehicle unlocked, press and hold the lock and unlock buttons simultaneously for three seconds. The hazard warning lamps will flash to confirm the change.

Operating note

If the Smart Key fails to operate, hold it under the steering column in the indicated position. Start the engine as normal (see page 7). The Smart Key can now be removed.

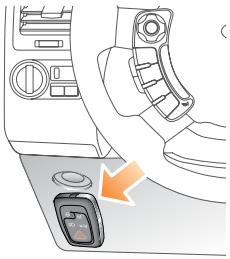

Central door locking

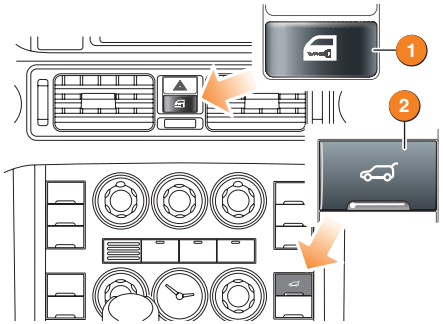

1. Press to lock/unlock all doors.
2. Press to release the tailgate.

Drive away locking

If enabled, all apertures will automatically lock when the vehicle speed exceeds 5mph (8 km/h).

The feature can be turned off or on in the **Vehicle Set-up** area accessed via the instrument pack menu.

Operating note

If the vehicle has already been locked with the Smart Key, the master unlocking switch will not release the locks.

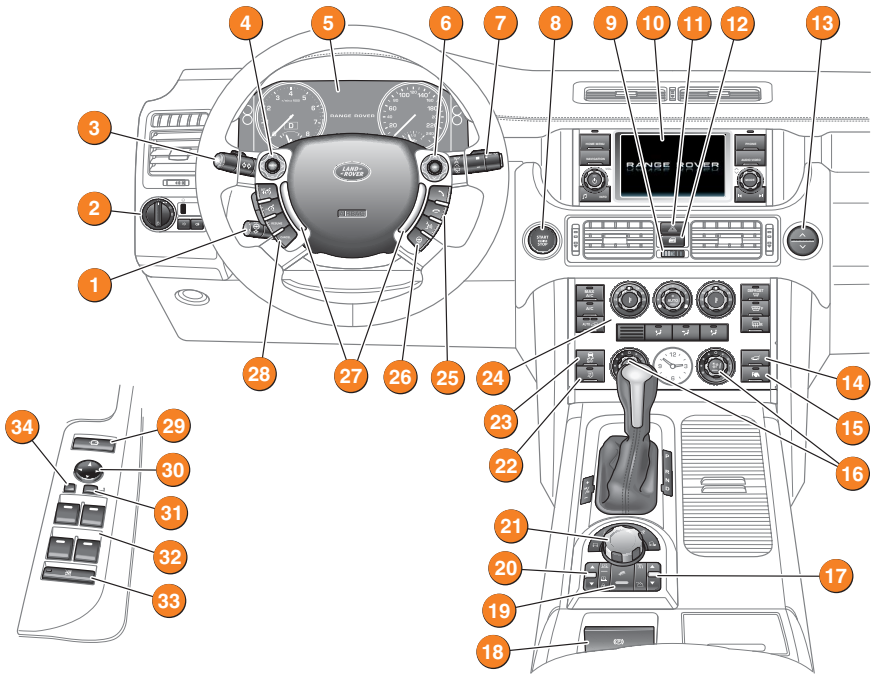

1. Steering column adjuster
2. Exterior lamps and dimmer control
3. Headlamps, turn signals and trip computer
4. Audio system control
5. Instrument panel, warning lamps and message center
6. Settings menu control
7. Wipers and washers
8. Start/stop button
9. Face temperature control
10. Touch screen
11. Hazard warning
12. Master locking switches
13. Upper and lower glovebox release
14. Tailgate release
15. PDC (Park Distance Control)
16. Climatic seat controls
17. High/Low range transmission
18. Electric parking brake
19. HDC (Hill Descent Control)
20. Air suspension control
21. Terrain response control
22. Rear climate control on/off
23. DSC (Dynamic Stability Control)
24. Climate control
25. Telephone and voice recognition controls
26. Heated steering wheel
27. Horn
28. Cruise control and adaptive cruise control
29. Air suspension access height
30. Mirror adjuster
31. Mirror selector
32. Window controls
33. Rear windows isolation switch
34. Power folding mirrors

RANGE ROVER

Seat adjustment

1. Four way lumbar support.
2. Seat forwards and back, cushion height and cushion front edge tilt.
3. Seat back angle.
4. Head restraint height.
5. Driving position memory controls.

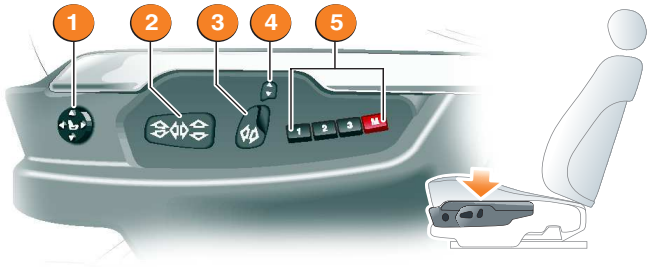

Electric steering column adjustment

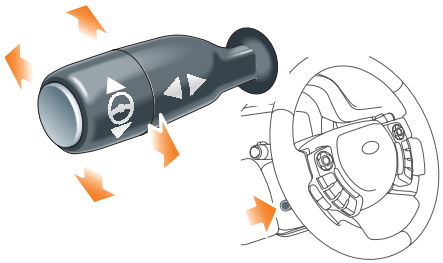

The steering wheel position can be adjusted in four directions, corresponding with the movement of the adjustment control.

With the vehicle stationary, move the control up, down, forward or back to adjust the steering column to your ideal driving position.

Driving position memory

Positions for driver's seat, steering column and exterior mirrors, can be stored in vehicle memory for future use.

1. Press the **M** button to activate the memory store function. The button will illuminate to indicate that the memory store function is active.

2. Within 5 seconds, press buttons **1**, **2** or **3** to store the current driving position to the chosen number. Any existing setting on that button will be over written.

3. A stored memory position can now be recalled with a press of the appropriate buton; **1**, **2** or **3**. The seat, steering wheel and mirrors will move to their pre set positions.



Operating note

Buttons **1**, **2** or **3** must be pressed within five seconds after pressing the **M** button otherwise the memory store function will cancel.

Electric windows *See page 3, item 32.*

Firmly press or lift the respective window switch and release it. Movement can be stopped by briefly operating the switch again.

When the rear window isolator switch is pressed an indicator lamp illuminates in the switch.

Global closing

When this is enabled, any open window can be closed with the Smart Key when leaving the vehicle. Press and hold the lock button

Resonance with lowered windows

If a resonance/booming sound occurs when a rear window is open, lowering an adjacent front window about 1 inch (25mm) will eliminate the conditiion.

Door mirrors *See page 3, items 30 and 31.*

Adjusting the position

1. Move the selector switch to the left or right.
2. Use the adjuster to set the relevant mirror position.

Powerfold door mirrors

Press the power fold button once to fold the mirrors back. Press again to return the mirrors to the opened position.

Blind spot monitoring

Each mirror displays icons to warn of overtaking vehicles in adjacent lanes. The monitored area extends approximately 19.7ft (6mtr) behind the vehicle and 8.2ft (2.5mtr) to the sides.

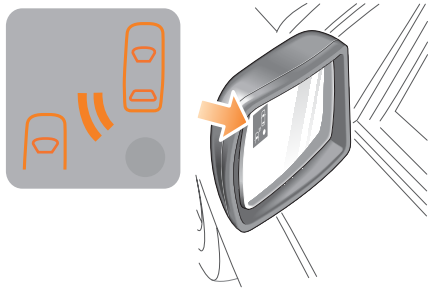

Seat belts and child restraints



A warning lamp on the instrument panel will illuminate if a front seat belt is unbuckled. This may be accompanied by an intermittent chime.

Child seats

It is the weight of a child, rather than age, that determines the type of seat required.

Refer to **Child safety** in the Owner's Handbook to determine the correct seat for your child.

Passenger air bag deactivation

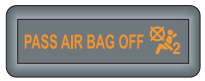

The air bag status lamp is in the overhead console.

The front passenger seat is fitted with an occupancy sensor system that determines the state of seat occupancy and sets the status to suit:

- Seat unoccupied - air bag deactivated and status lamp off.
- Seat occupied - air bag activated and status lamp off.
- Seat occupied by a child restraint or low weight object - air bag deactivated and status lamp on.

For further information, refer to **Occupant detection** in the Owner's Handbook.

Operating note

If the status lamp is permanently illuminated when the seat is definitely empty, please contact your Land Rover Retailer immediately.

Clock setting

From the **Home** screen, select **Settings** then **System Settings**. Touch the **Clock** icon to access the **Set Clock** screen.

Use the scroll controls to set the time and date then press **OK**.

All clocks will synchronise.

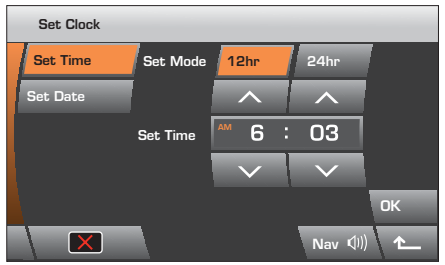

Climate control See page 3, items 9 and 24.

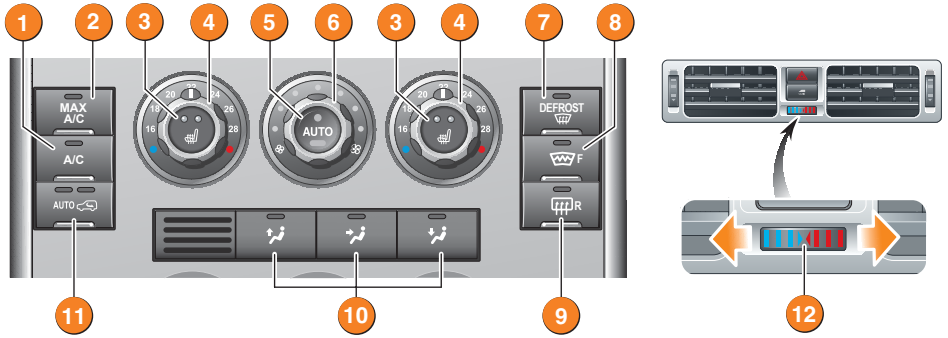

AUTO is the recommended operating mode. This will help prevent fogging. Set the face temperature control to mid position.

1. **A/C**. For cooled and dehumidified air. Press again to switch air conditioning off.
2. **MAX A/C**. Maximum interior cooling.
3. **Seat heaters**. Press once for high level heat, twice for low level heat and a third time for off.
4. **Temperature control**. Rotate to adjust temperature.

Note: The system allows temperature differential of up to 6°F (3°C) between left and right passenger areas.

5. **AUTO (automatic) mode.** The system will adjust the air conditioning, blower speed, air intake and airflow distribution to maintain the selected temperature(s).
6. **Blower control**. Rotate to adjust airflow from the facia vents.
7. **DEFROST**. Fastest method to remove frost or heavy fogging from the windshield. Press again for off.
8. **Heated windshield**.
9. **Heated rear screen**.
10. **Air distribution**.

- Windshield and side window vents.
- Face level.
- Foot level.

More than one setting can be selected simultaneously.

11. **Recirculation**. Press once to automatically restrict ingress of traffic fumes. Press twice for manual recirculation control. Extended use causes windshield fogging. Press again for normal operation.
12. **Face level temperature control**. Set to the mid position then adjust to suit personal preferences.

External water deposits

The air conditioning system removes moisture from the air and deposits the excess water beneath the vehicle. Puddles may form but this is normal and no cause for concern.

Climatic seats See page 3, item 16.

The controls can heat or cool the seat back or both seat back and seat cushion.

- Rotate clockwise to increase heat. Red indicators will illuminate.
- Rotate counter-clockwise to increase cooling. Blue indicators will illuminate.
- Press the center of a control to toggle between seat back and seat back plus seat cushion. Indicators in the control will illuminate.
- To turn off, rotate the control back to zero. Indicators will extinguish.

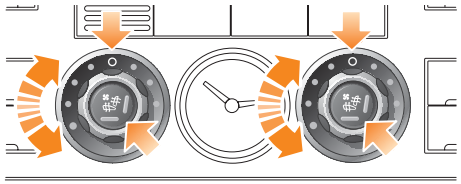

Note: Climatic seats consume considerable battery power. Operate only while the engine is running.

Engine start and stop See page 3, item 8.

The **START/STOP** button is operational only when the Smart Key is inside the vehicle.

Ignition only on

1. Press once to switch on the ignition.
2. Press again to switch off.

Engine start

1. The selector lever must be in **P** or **N** position.
2. Depress the footbrake then press and release the **START/STOP** button.

- To stop the engine, press the button again.

Operating note

The **START/STOP** button must be pressed to stop the engine. If not, it will continue to run even if the Smart Key is removed from the vehicle.

Instrument panel and vehicle set-up See page 3, items 5 and 6.

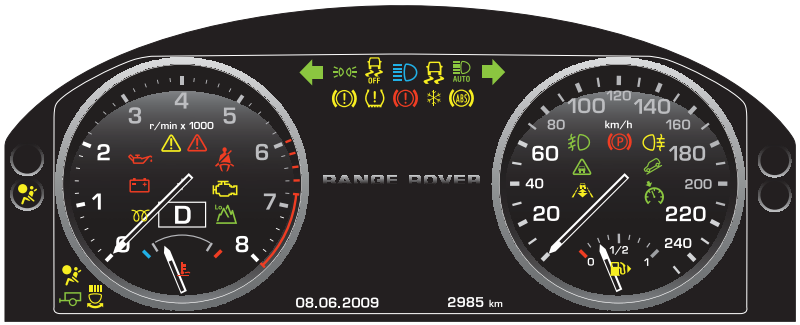

Driver information is displayed on a TFT Virtual Instrument Panel.

The panel appears blank until the ignition is turned on, at which point the panel will progress through the initial start up display. Information symbols will illuminate while system checks are made.

Many features of the display can be changed to suit personal preferences. Other features, such as the speedometer, can be altered to suit the driving situation. The speedometer can be configured for MPH or KPH in the **Vehicle Set-up** area accessed via the instrument pack menu.

Vehicle Set-up

1. Press the **OK** button on the steering wheel right side control.
2. Use the direction controls to move through the menu and subsequent options.
3. Press **OK** to confirm each selection.

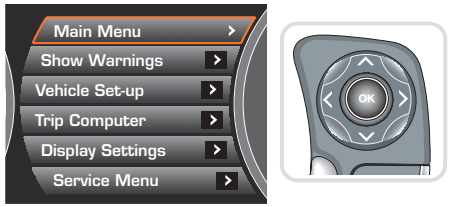

Instrument panel warning lamps

The following lamps may illuminate during normal driving to indicate that a related system or feature is operating. If any other warning lamp illuminates, refer to the Owner's Handbook. DO NOT ignore warning lamps.

- Seat belt reminder
- EPB on - USA
- EPB on - Canada
- DSC switched off
- HDC active
- Low gear range selected
- Cruise control active
- Trailer attached
- Front fog lamps on
- Rear fog lamps on
- Side lamps on
- Headlamp high beam on

Exterior lamps *See page 3, item 2.*

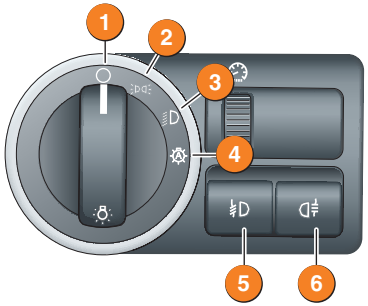

1. Exterior lamps off.
2. Side lamps.
3. Headlamps.
4. Automatic headlamps with high beam assist. A sensor monitors the exterior light levels and will switch side lamps and low beam headlamps ON and OFF as required.
   A related sensor also controls the high beam assist when it is enabled. The high beam/low beam control must be in the low beam position and road speed above 25mph (40 km/h).
5. Front fog lamps.
6. Rear fog lamps.

Wipers and washers

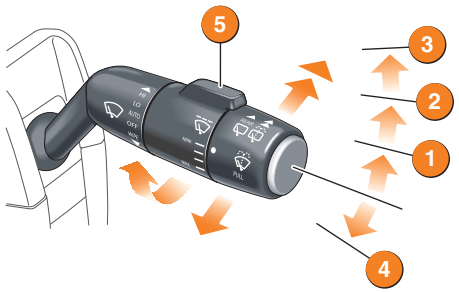

1. Sensor controlled intermittent wipe.
2. Normal speed wipe.
3. Fast speed wipe.
4. Single wipe.
5. Rotate collar to adjust sensitivity of the sensor.

Care point

Befor entering an automatic car wash, turn the wipers off to deactivate the sensor. Otherwise the wipers will operate during the car wash program and may be damaged.

Windshield wiper and washer

Press and release the end button or pull the lever towards the steering wheel to operate the wiper and washer.

Rear screen wiper and washer

Push the lever forwards to the first position for rear wiper operation.

Push forwards again to operate both wiper and washer.

Headlamps and turn signals

Headlamp high beam

Push the lever forwards to select headlamp high beam.

Headlamp flash

Pull the lever towards the steering wheel and release.

Turn signal flash

Move the lever up or down against spring pressure and release to flash the turn signals three times. Useful when lane changing.

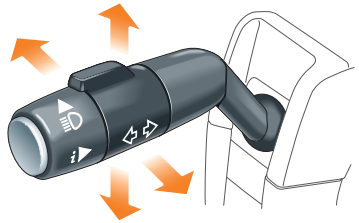

Electric parking brake *See page 3, item 18.*

Applying

With the vehicle stationary, pull up the parking brake lever and then release it. The red warning lamp in the instrument panel will illuminate.

- The parking brake will apply automatically if the ignition is turned off and the vehicle speed is below 2mph (3km/h).

Releasing

With the ignition on, apply the foot brake and press down on the parking brake lever.

If the vehicle is stationary and either **D**rive or **R**everse is selected, pressing the accelerator will automatically release the parking brake.

Automatic release can be affected while in CommandShift mode in first and second gears. With low range selected, third gear is also included.

Parking aids

With the ignition on, the parking aids are activated whenever reverse gear is selected. A short confirmation tone will sound after one second. If an obstruction is detected by the sensors, an intermittent tone will sound. As the vehicle moves closer to the obstruction the intermittent tone increases in frequency.

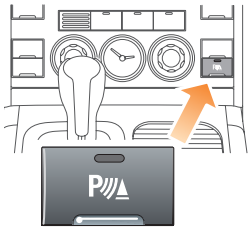

Manual control

Press the facia switch to deactivate the parking aids. The switch will illuminate and a short confirmation tone will sound. Press again to activate.

Rear view camera

The camera provides a rear view image with overlaid guidelines to assist when vehicle reversing.

Surround view camera system

The system consists of five cameras strategically located to aid vehicle positioning when manouvring at speeds below 11mph (18 km/h). Any two views can be selected simultaneously.

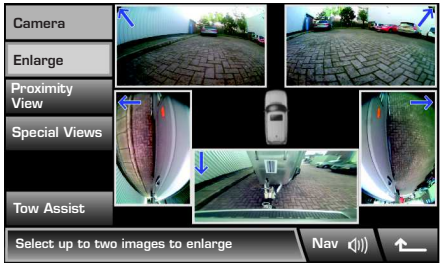

Tow assist

Designed to aid reversing while a trailer is attached. It becomes active when an approved trailer electrical connector is attached to the vehicle socket.

A tracking target sticker MUST be attached to the trailer and then trailer details added in the setup area. Refer to the **Camera systems** section of the Owner's Handbook for further details.

Transmission See page 3, item 17.

1. **Gearshift interlock.** With the engine running and **P** selected, apply the foot brake. On the selector lever, press in the release button and move the lever.

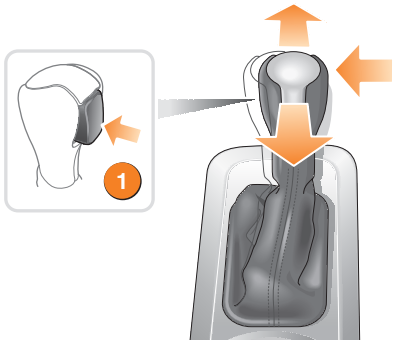

Automatic mode. Select **D**rive for fully automatic gear changes.

Sport mode. This is an automatic gear change mode, however, change points are modified to make full use of engine power.

Move the selector lever to the left into **S**. The indicator alongside the selector will illuminate and the message center will display **S** and the selected gear.

To return to automatic gear selection, move the selector back to the **D** position.

CommandShift mode. This is an alternative to the fully automatic modes and is effective when rapid acceleration and engine braking are required.

With Sport mode selected, move the selector lever forward or back for gear selection.

Transfer gearbox

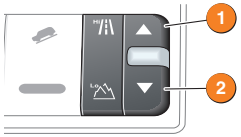

1. **High range.** Use for all normal road driving and also for off-road when driving across dry level terrain.

2. **Low range.** Use in situations where low speed manouvring is necessary, or in extreme off-road conditions.

Range changing

The recommended method for range changing is with the vehicle stationary.

With the engine running and the main gearbox in **N**eutral, move the transmission switch to the required position and then release. The switch and instrument panel lamps will flash during a range change.

When range changing is complete a message will be displayed on the message center.

Cruise control See page 3, item 28.

1. Press to activate cruise control and to set a speed or increase the speed in 1mph (2km/h) increments.

2. Press to decrease the speed in 1mph (2 km/h) increments.

3. Press to cancel cruise control.

4. Press to resume previous set speed retained in memory. Set speeds are cleared at ignition off.

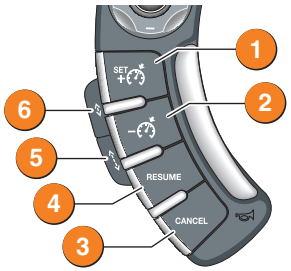

5. and 6. ACC gap setting

Adaptive cruise control (ACC)

This enhancement includes a front mounted radar that monitors traffic ahead. When ACC is operating, the system can be programmed to maintain a set gap to the vehicle ahead. If the vehicle ahead is travelling slower than your set cruise control speed, your vehicle will slow down and automatically maintain your set gap until the road ahead clears. At that point your vehicle will accelerate to the set cruise speed.

See **Adaptive cruise control** in the Owner's Handbook for full details.

Cruise control override

Cruise control will disengage if the brake pedal is pressed or when vehicle speed falls below 18mph (30 km/h).

Suspension height See page 3, item 20.

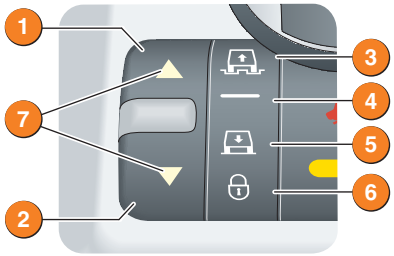

1. Raise.

2. Lower.

A height change can be made only when the engine is running and all doors are closed.

3. Off-road height. Provides increased ground clearance.

4. On-road height. Normal ride height.

5. Access height. Lowers the vehicle to provide easier entry, exit and loading of the vehicle. This position may be selected up to 40 seconds after the starter switch is turned off. Can also be selected when slowing to a halt. When speed slows to 12mph (20 km/h) the vehicle will begin to lower. Indicator lamps will extinguish when access height is reached.

6. Crawl (locked at Access height). Allows the vehicle to be driven at low speeds at access height, to give increased roof clearance.

7. Will illuminate while a height change is in progress.

Automatic height adjustment

Suspension height will automatically adjust according to road speed to maintain optimum driveability and handling.

Some Terrain Response programs will adjust suspension height automatically.

Access height

Can be selected directly with the button on the driver's door panel. Vehicle height at this setting is approximately 73.3in (1863mm)1.

Terrain response See page 3, item 21.



Terrain Response is always active and cannot be switched off. When the vehicle is started the system will normally start in its General program.

Rotate the control to select a program. This will adjust vehicle systems, including drive and suspension, to enhance driveability and traction on specific surface conditions and terrains.

We recommend that a special program be engaged whenever driving conditions are difficult and cancelled once those conditions are no longer present.

General - Use for typical road surfaces.

Grass-Gravel-Snow - Suitable for surfaces which are firm but have a slippery surface, e.g. grass, snow, loose gravel, pebbles or icy conditions.

Mud-Ruts - Suitable for soft, muddy, uneven or deeply rutted ground. LOW range selection is recommended.

Sand - Suitable for soft, predominantly dry, yielding sandy ground, e.g. sand dunes and deserts. If the sand is damp or wet, the Mud-Ruts program may be more beneficial.

Rock Crawl - Only selectable when in LOW range. Suitable for crossing wet or dry, solid unyielding ground requiring high levels of wheel displacement, e.g.clusters of boulders or rocky river beds.

Wading

Select the program most suitable for the surface beneath the water. DO NOT exceed 28 inches (700mm) water depth.

Touch screen navigation

The screen requires only a light touch to operate the function. Excess pressure could result in damage. On initial activation, ensure that both the correct country and area have been selected. For more information refer to the Owner's Handbook.

Setting a destination

1. From the navigation **Menu** screen, select **Destination Entry**.
2. Touch **Address**.
3. Use the on-screen keypad to enter address details. As each part of the address is displayed, select from the list to confirm.
4. When entry is complete, touch **OK**.
5. Touch **Destination** to begin calculation of the route options.
6. The screen displays **Route 1**. To view alternative routes touch **3 Route**. To use an alternative route, touch one of the selections.
7. Touch **Start** to commence guidance.

The selected route will be displayed and guidance will begin. When your destination is reached, voice and visual confirmation is given.

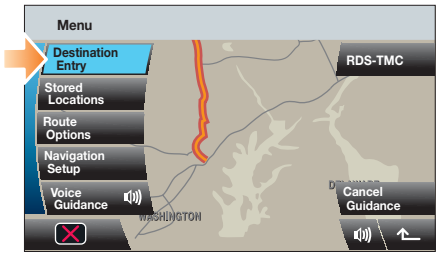

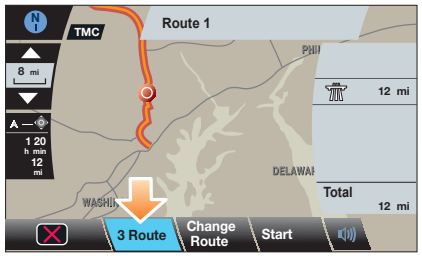

If the map is moved away from your current location, the position icon will be replaced by a touch button in the top left of the screen. Touch to bring the current location map back into view.

Touch this icon to repeat the last voice instruction. To deselect voice guidance go to the navigation **Menu** screen then select **Voice Guidance**.

Cancelling guidance

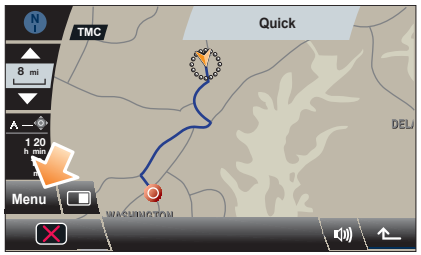

To cancel guidance, touch **Menu** then **Cancel Guidance**.

Bluetooth® phones

Compatible Bluetooth cell phones can communicate with the vehicle's inbuilt telephone system. Connection must be made with ignition on or engine running.

Use the following procedure in conjunction with your Bluetooth cell phone manufacturer's instructions.

Operating note

'Docking' and 'docked' are terms used in relation to a paired cell phone that is fully linked to the vehicle system and can be used for calls. The phone is not physically docked in a cradle.

Bluetooth selection

When the starter is turned on, the vehicle searches for up to 5 previously paired cell phones, starting with the most recent pairing. Before attempting a new pairing, wait for 30 seconds for this process to complete.

Pairing a cell phone to the vehicle

With the ignition on, touch screen active and no cell phone currently docked:

1. Start the Bluetooth search function on your cell phone.
2. The phone will list any Bluetooth devices found. Select **Land Rover** from the list.
3. Now enter the Bluetooth PIN 2121 into the cell phone.

The phone will pair and dock to the vehicle system.

Cell phone auto connect

The phone may request '**set authorisation**' or '**always allow**'. If this is set the phone will subsequently connect automatically.

Downloading phonebook entries

When a phone with phonebook download capability is paired and docked, its phonebook directory will automatically download to the vehicle system.

The vehicle phonebook will be updated each time a cell phone is docked to the system.

Bluetooth phone compatibility

For the latest list of compatible cell phones and their software, refer to **http://www.landrover.com/us/en/owners/about/bluetooth.htm**.

Calls via the touch screen

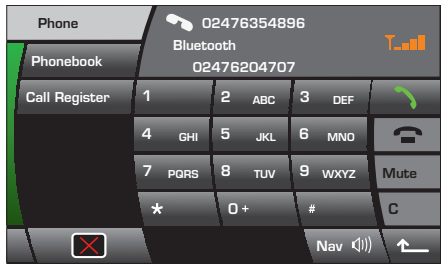

1. With a paired and active cell phone press the **PHONE** button on the screen surround.
2. Enter the number using the on-screen keypad.



3. Touch the icon on the screen to make the call.



4. Touch the icon to end a call.

Calls via the steering wheel controls

See page 3, item 25.

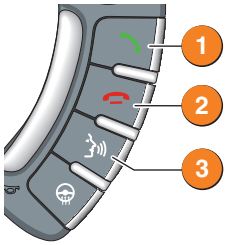

1. Press briefly to answer an incoming call or to redial the last number.
2. Press to end a call or to reject an incoming call.

Calls using voice control

3. Press to initiate voice control.Say 'Display show phone'. The Phone home page is displayed on the touch screen.
Use the screen features as described above.

Continuing a call with ignition off

If you need to turn off the ignition during a telephone conversation, there are two choices of how to continue the telephone call.

1. If you want to continue using the vehicle phone system, ensure that the audio system is **ON** before turning off the ignition. The vehicle system will be available while the current call is active. At call end, the vehicle system will shut down.
2. To continue a call on the paired cell phone, ensure that the audio system is turned **OFF** before turning the ignition off.

Telephone echo

If echo is experienced when using the phone, reduce the audio system volume during the call.

Touch screen navigation

The screen requires only a light touch to operate the function. Excess pressure could result in damage. On initial activation, ensure that both the correct country and area have been selected. For more information refer to the Owner's Handbook.

Setting a destination

1. From the navigation **Menu** screen, select **Destination Entry**.
2. Touch **Address**.
3. Use the on-screen keypad to enter address details. As each part of the address is displayed, select from the list to confirm.
4. When entry is complete, touch **OK**.
5. Touch **Destination** to begin calculation of the route options.
6. The screen displays **Route 1**. To view alternative routes touch **3 Route**. To use an alternative route, touch one of the selections.
7. Touch **Start** to commence guidance.

The selected route will be displayed and guidance will begin. When your destination is reached, voice and visual confirmation is given.

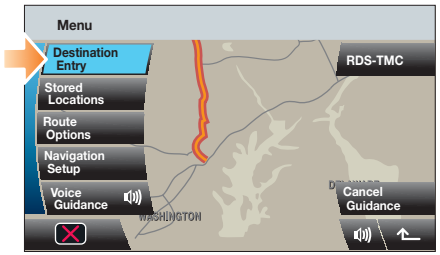

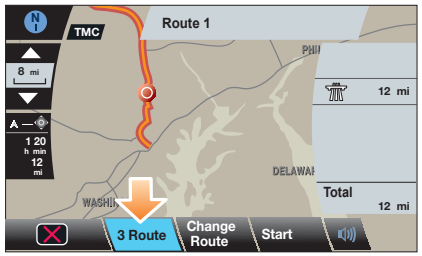

If the map is moved away from your current location, the position icon will be replaced by a touch button in the top left of the screen. Touch to bring the current location map back into view.

Touch this icon to repeat the last voice instruction. To deselect voice guidance go to the navigation **Menu** screen then select **Voice Guidance**.

Cancelling guidance

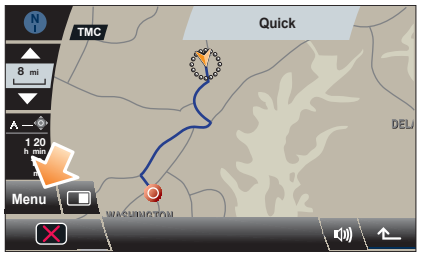

To cancel guidance, touch **Menu** then **Cancel Guidance**.

Bluetooth® phones

Compatible Bluetooth cell phones can communicate with the vehicle's inbuilt telephone system. Connection must be made with ignition on or engine running.

Use the following procedure in conjunction with your Bluetooth cell phone manufacturer's instructions.

Operating note

'Docking' and 'docked' are terms used in relation to a paired cell phone that is fully linked to the vehicle system and can be used for calls. The phone is not physically docked in a cradle.

Bluetooth selection

When the starter is turned on, the vehicle searches for up to 5 previously paired cell phones, starting with the most recent pairing. Before attempting a new pairing, wait for 30 seconds for this process to complete.

Pairing a cell phone to the vehicle

With the ignition on, touch screen active and no cell phone currently docked:

1. Start the Bluetooth search function on your cell phone.
2. The phone will list any Bluetooth devices found. Select **Land Rover** from the list.
3. Now enter the Bluetooth PIN 2121 into the cell phone.

The phone will pair and dock to the vehicle system.

Cell phone auto connect

The phone may request '**set authorisation**' or '**always allow**'. If this is set the phone will subsequently connect automatically.

Downloading phonebook entries

When a phone with phonebook download capability is paired and docked, its phonebook directory will automatically download to the vehicle system.

The vehicle phonebook will be updated each time a cell phone is docked to the system.

Bluetooth phone compatibility

For the latest list of compatible cell phones and their software, refer to **http://www.landrover.com/us/en/owners/about/bluetooth.htm**.

Calls via the touch screen

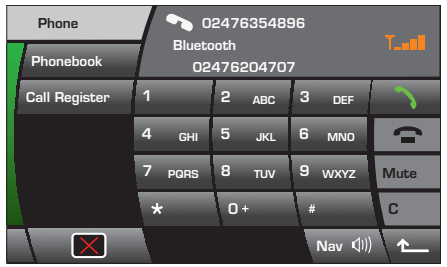

1. With a paired and active cell phone press the **PHONE** button on the screen surround.
2. Enter the number using the on-screen keypad.



3. Touch the icon on the screen to make the call.



4. Touch the icon to end a call.

Calls via the steering wheel controls

See page 3, item 25.

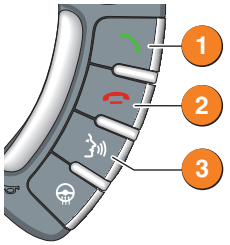

1. Press briefly to answer an incoming call or to redial the last number.
2. Press to end a call or to reject an incoming call.

Calls using voice control

3. Press to initiate voice control.Say 'Display show phone'. The Phone home page is displayed on the touch screen.
Use the screen features as described above.

Continuing a call with ignition off

If you need to turn off the ignition during a telephone conversation, there are two choices of how to continue the telephone call.

1. If you want to continue using the vehicle phone system, ensure that the audio system is **ON** before turning off the ignition. The vehicle system will be available while the current call is active. At call end, the vehicle system will shut down.
2. To continue a call on the paired cell phone, ensure that the audio system is turned **OFF** before turning the ignition off.

Telephone echo

If echo is experienced when using the phone, reduce the audio system volume during the call.

Gas station information

Gasoline filling

Gas filler flap

The gas filler flap is located on the right side of the vehicle. If the vehicle is locked, the flap can not be opened. Press the flap at the front edge to open.

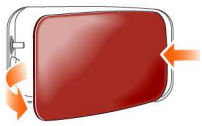

Operating the gas cap

Twist the cap counter-clockwise to undo.

A hook is provided on the flap hinge to hold the cap while refuelling. After refuelling, refit and tighten the cap until it clicks three times.

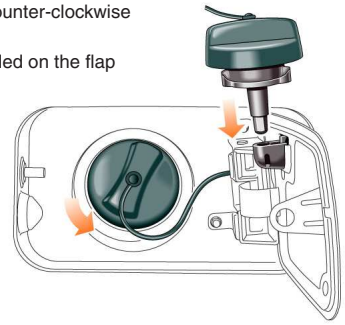

Fuel specification

The correct fuel specification for your vehicle is shown on the inside of the gas filler flap.

Incorrect fuelling

- DO NOT use E85 fuels (85% ethanol content). Equipment necessary for the use of fuels containing more than 10% ethanol is not fitted to this vehicle. If E85 fuels are used serious engine and fuel system damage will occur.

Filling with the wrong fuel

If the vehicle is filled with the wrong type of fuel:

- DO NOT start the engine!
- Call for qualified assistance!

Hood release

The hood release is located in the driver's side footwell.

Tire pressure label

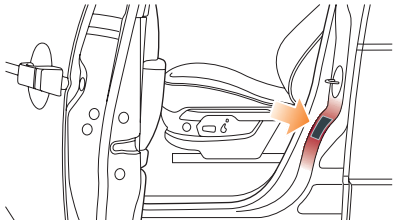

Tire pressures are shown on a label attached to the pillar behind the driver's door.

RANGE ROVER
RANGE ROVER
RANGE ROVER

GENERAL INFORMATION

DESCRIPTION AND OPERATION

DIGITAL AUDIO CONTROL MODULE C (DACMC)

CAUTION:

Diagnosis by substitution from a donor vehicle is **NOT** acceptable. Substitution of control modules does not guarantee confirmation of a fault, and may also cause additional faults in the vehicle being tested and/or the donor vehicle

NOTES:

- If the control module or a component is suspect and the vehicle remains under manufacturer warranty, refer to the warranty policy and procedures manual, or determine if any prior approval programme is in operation, prior to the installation of a new module/component
- Generic scan tools may not read the codes listed, or may read only 5-digit codes. Match the 5 digits from the scan tool to the first 5 digits of the 7-digit code listed to identify the fault (the last 2 digits give extra information read by the manufacturer-approved diagnostic system)
- When performing voltage or resistance tests, always use a digital multimeter accurate to three decimal places and with a current calibration certificate. When testing resistance, always take the resistance of the digital multimeter leads into account
- Check and rectify basic faults before beginning diagnostic routines involving pinpoint tests
- Inspect connectors for signs of water ingress, and pins for damage and/or corrosion
- If diagnostic trouble codes are recorded and, after performing the pinpoint tests, a fault is not present, an intermittent concern may be the cause. Always check for loose connections and corroded terminals
- Where an 'on demand self-test' is referred to, this can be accessed via the 'diagnostic trouble code monitor' tab on the manufacturers approved diagnostic system
- Check DDW for open campaigns. Refer to the corresponding bulletins and SSMs which may be valid for the specific customer complaint and carry out the recommendations as required

The table below lists all Diagnostic Trouble Codes (DTCs) that could be logged in the Digital Audio Control Module C, for additional Diagnosis and Testing information refer to the relevant Diagnosis and Testing Section. For additional information, refer to: Information and Entertainment System (415-00 Information and Entertainment System - General Information, Diagnosis and Testing).

DTC	DESCRIPTION	POSSIBLE CAUSES	ACTION
B1A56-02	Antenna - General signal failure	■ Antenna general signal failure	■ Renew the diversity antenna amplifier
B1A56-11	Antenna - Circuit short to ground	■ Diversity antenna amplifier circuit short to ground	■ Refer to the electrical guides and check the diversity antenna amplifier circuit and the antenna for short circuit to ground
B1A56-12	Antenna - Circuit short to battery	■ Diversity antenna amplifier circuit short to power	■ Refer to the electrical guides and check the diversity antenna amplifier circuit and the antenna for short circuit to power
B1A56-13	Antenna - Circuit open	■ Diversity antenna amplifier circuit open circuit	■ Refer to the electrical guides and check the diversity antenna amplifier circuit and the antenna for open circuit
U200D-14	Control Module Output Power A - Circuit short to ground or open	■ Diversity antenna amplifier power supply circuit short to ground or open circuit	**NOTE:** This DTC will always be present, due to electrical architecture of vehicle ■ No repair action is required

U3000-04	Control Module - System internal failures	■ Diversity antenna amplifier internal failure	■ Renew the amplifier module
U3000-4A	Control Module - Incorrect component installed	■ Diversity antenna amplifier internal incorrect component installed ■ The module has been installed to a vehicle not configured to accept it	■ Using the manufacturer approved diagnostic system select the vehicle configuration main menu, select configure existing modules menu and program the module
U3000-55	Control Module - Not configured	■ Diversity antenna amplifier not configured correctly	■ Using the manufacturer approved diagnostic system select the vehicle configuration main menu, select configure existing modules menu and program the module
U3000-87	Control Module - Missing message	■ Missing message	■ Using the manufacturer approved diagnostic system select the vehicle configuration main menu, select configure existing modules menu and program the module
U3000-98	Control Module - Component or system over temperature	■ Diversity antenna amplifier component or system over temperature	■ Consider moving the amplifier mounting position to prevent unit overheating. Cool the vehicle interior down by ensuring it is in the shade and have the A/C on cool. When cool, clear the DTC and retest. If the problem persists, renew the amplifier module

2012.0 RANGE ROVER (LM), 100-00

GENERAL INFORMATION

DESCRIPTION AND OPERATION

BLUETOOTH MODULE (TEL)

CAUTION:

Diagnosis by substitution from a donor vehicle is **NOT** acceptable. Substitution of control modules does not guarantee confirmation of a fault, and may also cause additional faults in the vehicle being tested and/or the donor vehicle

NOTES:

- If the control module or a component is suspect and the vehicle remains under manufacturer warranty, refer to the warranty policy and procedures manual, or determine if any prior approval programme is in operation, prior to the installation of a new module/component
- Generic scan tools may not read the codes listed, or may read only 5-digit codes. Match the 5 digits from the scan tool to the first 5 digits of the 7-digit code listed to identify the fault (the last 2 digits give extra information read by the manufacturer-approved diagnostic system)
- When performing voltage or resistance tests, always use a digital multimeter accurate to three decimal places and with a current calibration certificate. When testing resistance, always take the resistance of the digital multimeter leads into account
- Check and rectify basic faults before beginning diagnostic routines involving pinpoint tests
- Inspect connectors for signs of water ingress, and pins for damage and/or corrosion
- If diagnostic trouble codes are recorded and, after performing the pinpoint tests, a fault is not present, an intermittent concern may be the cause. Always check for loose connections and corroded terminals
- Where an 'on demand self-test' is referred to, this can be accessed via the 'diagnostic trouble code monitor' tab on the manufacturers approved diagnostic system
- Check DDW for open campaigns. Refer to the corresponding bulletins and SSMs which may be valid for the specific customer complaint and carry out the recommendations as required

The table below lists all Diagnostic Trouble Codes (DTCs) that could be logged in the Bluetooth Module, for additional Diagnosis and Testing information refer to the relevant Diagnosis and Testing Section. For additional information, refer to: Cellular Phone (415-00 Information and Entertainment System - General Information, Diagnosis and Testing).

DTC	DESCRIPTION	POSSIBLE CAUSES	ACTION
B1D79-84	Microphone Input - Signal below allowable range	■ The 'Receive Audio over MOST Test' failed and means that the audio received at the microphone detection point is too low ■ Microphone fault ■ Harness/connector fault ■ Integrated head unit (IHU) fault	■ Check the operation of the microphone. Refer to the electrical circuit diagrams and check the microphone (MIC) circuits. Renew /repair as necessary. Refer to the warranty policy and procedures manual if a module is suspect
U1A00-88	Private Communication Network - Bus off	■ Internal communications failure	■ Clear the DTC and retest. If the problem persists, renew the Bluetooth Module. Refer to the warranty policy and procedures manual if a module is suspect
U2001-9A	Reduced System Function - Component or system operating conditions	■ Bluetooth error - system over-temperature	■ Allow the system to cool, clear the DTC and check /monitor for re-occurrence. If DTC re-occurs suspect the module. Check and install a new module as required. Refer to the Warranty Policy and Procedures manual if a module is suspect
U201A-	Control Module		

54	Main Calibration Data - Missing calibration	■ Local configuration file is missing (not loaded) in the control module	■ Configure the module using the manufacturers approved diagnostic system (file download may take several minutes)
U3000-44	Control module - Data memory failure	■ Bluetooth Module RAM fault (data memory failure leading to possible corrupt local configuration file)	■ Configure the module using the manufacturers approved diagnostic system and download the local configuration file. Clear the DTC and retest. If the problem persists, renew the Bluetooth Module. Refer to the warranty policy and procedures manual if a module is suspect
U3000-45	Control module - Program memory failure	■ Bluetooth Module ROM fault (data memory failure leading to possible corrupt local configuration file)	■ Configure the module using the manufacturers approved diagnostic system and download the local configuration file. Clear the DTC and retest. If the problem persists, renew the Bluetooth Module. Refer to the warranty policy and procedures manual if a module is suspect
U3000-54	Control module - Missing calibration	■ MOST not configured correctly - incorrect voice language installed	■ Check and amend the Car Configuration File in the Information and Entertainment Control Module using the manufacturer approved diagnostic system
U3000-56	Control module - Invalid /incomplete configuration	■ One or more of the received car configuration file (CCF) data parameters is deemed to be invalid	■ Check and amend the Car Configuration File using the manufacturer approved diagnostic system
U3003-16	Battery Voltage - Circuit voltage below threshold	■ Battery voltage below threshold	■ Check vehicle battery and charging system. Refer to the relevant section in the workshop manual. Refer to the electrical circuit diagrams and check the power supply circuits to the module
U3003-	Battery Voltage		

17	- Circuit voltage above threshold	■ Battery voltage above threshold	■ Check vehicle battery and charging system. Refer to the relevant section in the workshop manual. Refer to the electrical circuit diagrams and check the power supply circuits to the module

GENERAL INFORMATION

DESCRIPTION AND OPERATION

AIR SUSPENSION CONTROL MODULE (RLM)

CAUTION:

Diagnosis by substitution from a donor vehicle is **NOT** acceptable. Substitution of control modules does not guarantee confirmation of a fault, and may also cause additional faults in the vehicle being tested and/or the donor vehicle.

NOTES:

- If the control module or a component is suspect and the vehicle remains under manufacturer warranty, refer to the Warranty Policy and Procedures manual (section B1.2), or determine if any prior approval programme is in operation, prior to the installation of a new module/component.
- Generic scan tools may not read the codes listed, or may read only 5-digit codes. Match the 5 digits from the scan tool to the first 5 digits of the 7-digit code listed to identify the fault (the last 2 digits give extra information read by the manufacturer-approved diagnostic system).
- Check and rectify basic faults before beginning diagnostic routines involving pinpoint tests.
- Inspect connectors for signs of water ingress, and pins for damage and/or corrosion.
- If DTCs are recorded and, after performing the pinpoint tests, a fault is not present, an intermittent concern may be the cause. Always check for loose connections and corroded terminals.

The table below lists all Diagnostic Trouble Codes (DTCs) that could be logged in the Air Suspension Control Module, for additional Diagnosis and Testing information refer to the relevant Diagnosis and Testing Section. For additional information, refer to: Vehicle Dynamic Suspension (204-05 Vehicle Dynamic Suspension, Diagnosis and Testing).

DTC	DESCRIPTION	POSSIBLE CAUSES	ACTION
B1A84-55	Car Configuration Data - Not configured	■ System not configured	■ Using the manufacturer approved diagnostic system, check and up-date the car configuration file as necessary. Ensure the air suspension control module software is the correct version. Clear the DTCs and retest

		▪ Data does not match that expected for specification ▪ Incorrect software version loaded	
C112F-72	Air Spring Valve - Actuator stuck open	▪ Corner valve stuck open (fully or partially) ▪ Vehicle driven while system in "Tight Tolerance" mode	▪ Where possible, refer to the guided diagnostic routine for this DTC on the approved diagnostic system. Complete corner valve checks. If necessary, clear tight tolerance mode. Clear the DTCs and retest
C1130-66	Air Spring Air Supply - Signal has too many transitions /events	▪ Air spring leak ▪ Leak in air harness to air spring ▪ Corner valve leak to gallery ▪ Compressor assembly fault ▪ Vehicle driven while system in "Tight Tolerance" mode	▪ Visually inspect the system for air leakage. Where possible, refer to the guided diagnostic routine for this DTC on the approved diagnostic system
C1130-	Air Spring Sir		

7A	Supply - Fluid leak or seal failure	■ Detached or burst air pipe ■ Leaking air spring or pipe to air spring (large leak) ■ Loose pipe connection ■ Insufficient pressure from compressor ■ Height sensor fault	■ Visually inspect the system for an excessive air leak. Check the height sensor linkage(s) for damage/restrictions. Visually inspect the air harness for evidence of melting, crushing, kinking or collapsing. Where possible, refer to the guided diagnostic routine for this DTC on the approved diagnostic system
C1131-92	Air Supply - Performance or incorrect operation	■ Loose or burst air pipe ■ Detached air pipe ■ Leaking pipe from reservoir valve block to air supply unit or either axle valve block ■ Insufficient pressure from compressor ■ Reservoir valve block piped incorrectly	■ Visually inspect the system for air leakage. Check the reservoir valve block pipes for correct routing and installation

C1138-23	Access Switch - Signal stuck low	■ Switch signal stuck low (switch on driver's door) ■ Switch harness short to ground ■ Switch stuck in pressed position ■ Driver's door switchpack fault	■ Check the access switch operation and repair/renew as necessary. Refer to the electrical circuit diagrams and check the wiring harness between the access switch on driver's door and the air suspension control module for continuity. Repair/renew as necessary
C1A01-19	LED - Circuit current above threshold	**NOTE:** Circuit reference - LED_NEG ■ Switch pack LED circuit current above threshold ■ LED cathode (negative) connection shorted to positive ■ One or more LEDs short circuit	■ Refer to the electrical circuit diagrams and check circuit between the air suspension control module and switch pack for short circuit to power. Repair as necessary. Clear the DTCs and retest. If the DTC is still logged suspect the switch pack

C1A03-1C	Left Front Height Sensor - Circuit voltage out of range	■ Height sensor disconnected ■ Height sensor harness wiring short circuit to ground, short circuit to power or high resistance ■ Height sensor fault	■ Check the sensor connector for damage. Refer to the electrical circuit diagrams and check the sensor circuit for continuity or short circuit. Check sensor signal changes when sensor is rotated. If any height sensor fixings are slackened or found to be loose, or a height sensor has been changed, the vehicle ride height must be re-calibrated. Calibrate the system using the approved diagnostic system
C1A03-26	Left Front Height Sensor - Signal rate of change below threshold	■ Sensor signal rate of change below threshold /signal voltage stuck ■ Height sensor linkage disconnected ■ Height sensor fault ■ Height sensor harness wiring short circuit to ground, short circuit to power or high resistance	■ Check height sensor linkage is connected and not damaged. Visually inspect the height sensor for security, damage and correct orientation /installation. Check the sensor connector for damage. Refer to the electrical circuit diagrams and check the sensor circuit for continuity or short circuit. Repair/renew as necessary. Where possible, refer to the guided diagnostic routine for this DTC on the approved diagnostic system
C1A03-27	Left Front Height Sensor	■ Left-hand front height sensor	■ Check the sensor connector for damage. Refer to the electrical circuit diagrams and check the sensor circuit for continuity or short circuit. Visually inspect the height sensor for security, damage and correct orientation/installation. Repair/renew as necessary. Where possible, refer

	- Signal rate of change above threshold	signal rate of change above threshold ■ Height sensor harness wiring short circuit to ground, short circuit to power or intermittent connection ■ Height sensor fault	to the guided diagnostic routine for this DTC on the approved diagnostic system
C1A03-29	Left Front Height Sensor - Signal invalid	■ Left-hand front height sensor signal invalid ■ Incorrect height calibration process	■ Using the manufacturer approved diagnostic system, perform routine - Suspension system - Height calibration - Located under 'Service Functions'
C1A03-78	Left Front Height Sensor - Alignment or adjustment incorrect	■ Sensor alignment or adjustment incorrect; signal out of range ■ Height sensor linkage not connected ■ Height sensor linkage toggled ■ Height sensor loose	**NOTE:** If any height sensor fixings are slackened or found to be loose, or a height sensor has been changed, using the manufacturer approved diagnostic system, perform routine - Suspension system - Height calibration - Located under 'Service Functions' ■ Check height sensor linkage is connected and not damaged. Visually inspect the height sensor for security, damage and correct orientation /installation. Check the sensor connector for damage. Refer to the electrical circuit diagrams and check the sensor circuit for continuity or

			■ Height sensor bracket bent ■ Incorrect height calibration ■ Wiring to height sensor short to ground ■ Wiring to height sensor short to other cable ■ Height sensor electrical fault	short circuit. Repair/renew as necessary. Where possible, refer to the guided diagnostic routine for this DTC on the approved diagnostic system
C1A03-92	Left Front Height Sensor - Performance or incorrect operation		■ Left-hand front height sensor height performance not as expected /signal changing slower than expected ■ Axle valve block pipes connected incorrectly ■ Height sensor incorrectly installed ■ Blocked /damaged or crushed gallery pipe	**NOTE:** If any height sensor fixings are slackened or found to be loose, or a height sensor has been changed, using the manufacturer approved diagnostic system, perform routine - Suspension system - Height calibration - Located under 'Service Functions' ■ Check that the vehicle is free of obstructions. Check the height sensor for correct installation and torque of fixings. If necessary, calibrate the system using the approved diagnostic system. Where available, refer to the guided diagnostic routine for this DTC on the approved diagnostic system. Check for an air spring leak. Check the air harness for evidence of melting, crushing, kinking or collapsing. Check the front and rear valve block pipes for correct routing and installation. Refer to the approved diagnostic system for corner, reservoir and exhaust valve checks. Check the corner valve for leaks

		■ Blocked /damaged or crushed air spring pipe ■ Corner valve stuck closed (mechanically) ■ Reservoir valve stuck open (mechanically)	
C1A04-1C	Right Front Height Sensor - Circuit voltage out of range	■ Right-hand front height sensor signal voltage out of range ■ Height sensor disconnected ■ Height sensor harness wiring short circuit to ground, short circuit to power or high resistance ■ Height sensor fault	■ Check the sensor connector for damage. Refer to the electrical circuit diagrams and check the sensor circuit for continuity or short circuit. Check sensor signal changes when sensor is rotated. If any height sensor fixings are slackened or found to be loose, or a height sensor has been changed, the vehicle ride height must be re-calibrated. Calibrate the system using the approved diagnostic system
C1A04-26	Right Front Height Sensor - Signal rate of change below threshold	■ Right-hand front height sensor signal rate of change below threshold/signal voltage stuck	■ Check height sensor linkage is connected and not damaged. Visually inspect the wiring harness and connectors for water ingress. Where possible, refer to the guided diagnostic routine for this DTC on the approved diagnostic system

		■ Height sensor linkage disconnected ■ Height sensor fault ■ Height sensor harness wiring short circuit to ground, short circuit to power or short to each other	
C1A04-27	Right Front Height Sensor - Signal rate of change above threshold	■ Right-hand front height sensor signal rate of change above threshold ■ Height sensor harness wiring short circuit to ground, short circuit to power or high resistance ■ Height sensor fault	■ Visually inspect the wiring harness and connectors for damage or water ingress. Visually inspect the height sensor for security, damage and correct orientation/installation. Repair/renew as necessary. Where possible, refer to the guided diagnostic routine for this DTC on the approved diagnostic system
C1A04-29	Right Front Height Sensor - Signal invalid	■ Right-hand front height sensor signal invalid	■ Using the manufacturer approved diagnostic system, perform routine - Suspension system - Height calibration - Located under 'Service Functions'

		■ Incorrect height calibration process	
C1A04-78	Right Front Height Sensor - Alignment or adjustment incorrect	■ Sensor alignment or adjustment incorrect; signal out of range ■ Height sensor linkage not connected ■ Height sensor linkage toggled ■ Height sensor loose ■ Height sensor bracket bent ■ Incorrect height calibration ■ Wiring to height sensor short to ground ■ Wiring to height sensor short to other cable ■ Height sensor electrical fault	△ NOTE: If any height sensor fixings are slackened or found to be loose, or a height sensor has been changed, using the manufacturer approved diagnostic system, perform routine - Suspension system - Height calibration - Located under 'Service Functions' ■ Check height sensor linkage is connected and not damaged. Visually inspect the height sensor for security, damage and correct orientation /installation. Check the sensor connector for damage. Refer to the electrical circuit diagrams and check the sensor circuit for continuity or short circuit. Repair/renew as necessary. Where possible, refer to the guided diagnostic routine for this DTC on the approved diagnostic system
C1A04-92	Right Front Height Sensor	■ Right-hand front height sensor	△ NOTE:

	- Performance or incorrect operation	height changing slower than expected ■ Axle valve block pipes incorrectly installed (unions reversed) ■ Height sensor incorrectly installed ■ A gallery pipe is blocked/damaged /crushed ■ An air spring pipe is blocked /damaged /crushed ■ Corner valve stuck closed ■ Reservoir valve stuck open (mechanically)	If any height sensor fixings are slackened or found to be loose, or a height sensor has been changed, using the manufacturer approved diagnostic system, perform routine - Suspension system - Height calibration - Located under 'Service Functions' ■ Check that the vehicle is free of obstructions. Check the height sensor for correct installation and torque of fixings. If necessary, calibrate the system using the approved diagnostic system. Where available, refer to the guided diagnostic routine for this DTC on the approved diagnostic system. Check for an air spring leak. Check the air harness for evidence of melting, crushing, kinking or collapsing. Check the front and rear valve block pipes for correct routing and installation. Check the reservoir valve block pipes for correct routing and installation. Refer to the approved diagnostic system for corner, reservoir and exhaust valve checks. Check the corner valve for leaks
C1A05-1C	Left Rear Height Sensor - Circuit voltage out of range	■ Left-hand rear height sensor signal voltage out of range ■ Height sensor disconnected ■ Height sensor harness wiring	■ Check the sensor connector for damage. Refer to the electrical circuit diagrams and check the sensor circuit for continuity or short circuit. Check sensor signal changes when sensor is rotated. If any height sensor fixings are slackened or found to be loose, or a height sensor has been changed, the vehicle ride height must be re-calibrated. Calibrate the system using the approved diagnostic system

		short circuit to ground, short circuit to power or high resistance ■ Height sensor fault	
C1A05-26	Left Rear Height Sensor - Signal rate of change below threshold	■ Left-hand rear height sensor signal voltage stuck whilst vehicle is driven ■ Height sensor linkage disconnected ■ Height sensor fault ■ Height sensor harness wiring short circuit to ground, short circuit to power or high resistance	■ Check height sensor linkage is connected and not damaged. Visually inspect the wiring harness and connectors for water ingress. Where available, refer to the guided diagnostic routine for this DTC on the approved diagnostic system
C1A05-27	Left Rear Height Sensor - Signal rate of change above threshold	■ Left-hand rear height sensor signal rate of change above threshold ■ Height sensor harness wiring short circuit to	■ Check height sensor linkage is connected and not damaged. Visually inspect the wiring harness and connectors for water ingress. Where available, refer to the guided diagnostic routine for this DTC on the approved diagnostic system

		ground, short circuit to power or high resistance ■ Height sensor linkage disconnected ■ Height sensor failure	
C1A05-29	Left Rear Height Sensor - Signal invalid	■ Left-hand rear height sensor signal invalid ■ Incorrect height calibration process	■ Using the manufacturer approved diagnostic system, perform routine - Suspension system - Height calibration - Located under 'Service Functions'
C1A05-78	Left Rear Height Sensor - Alignment or adjustment incorrect	■ Sensor alignment or adjustment incorrect; signal out of range ■ Height sensor linkage not connected ■ Height sensor linkage toggled ■ Height sensor loose ■ Height sensor bracket bent	**NOTE:** If any height sensor fixings are slackened or found to be loose, or a height sensor has been changed, using the manufacturer approved diagnostic system, perform routine - Suspension system - Height calibration - Located under 'Service Functions' ■ Check height sensor linkage is connected and not damaged. Visually inspect the height sensor for security, damage and correct orientation /installation. Check the sensor connector for damage. Refer to the electrical circuit diagrams and check the sensor circuit for continuity or short circuit. Repair/renew as necessary. Where possible, refer to the guided diagnostic routine for this DTC on the approved diagnostic system

			■ Incorrect height calibration ■ Wiring to height sensor short to ground ■ Wiring to height sensor short to other cable ■ Height sensor electrical fault	
C1A05-92	Left Rear Height Sensor - Performance or incorrect operation		■ Left-hand rear height sensor height changing slower than expected ■ Axle valve block pipes connected incorrectly ■ Height sensor incorrectly installed ■ A gallery pipe is blocked/damaged /crushed ■ An air spring pipe is blocked /damaged /crushed	**NOTE:** If any height sensor fixings are slackened or found to be loose, or a height sensor has been changed, using the manufacturer approved diagnostic system, perform routine - Suspension system - Height calibration - Located under 'Service Functions' ■ Check that the vehicle is free of obstructions. Check the height sensor for correct installation and torque of fixings. If necessary, calibrate the system using the approved diagnostic system. Where available, refer to the guided diagnostic routine for this DTC on the approved diagnostic system. Check for an air spring leak. Check the air harness for evidence of melting, crushing, kinking or collapsing. Check the front and rear valve block pipes for correct routing and installation. Check the reservoir valve block pipes for correct routing and installation. Refer to the approved diagnostic system for corner, reservoir and exhaust valve checks. Check the corner valve for leaks

		■ Corner valve stuck closed (mechanically) ■ Reservoir valve stuck open (mechanically)	
C1A06-1C	Right Rear Height Sensor - Circuit voltage out of range	■ Right-hand rear height sensor signal voltage out of range ■ Height sensor disconnected ■ Height sensor harness wiring short circuit to ground, short circuit to power or high resistance ■ Height sensor fault	■ Check the sensor connector for damage. Refer to the electrical circuit diagrams and check the sensor circuit for continuity or short circuit. Check sensor signal changes when sensor is rotated. If any height sensor fixings are slackened or found to be loose, or a height sensor has been changed, the vehicle ride height must be re-calibrated. Calibrate the system using the approved diagnostic system
C1A06-26	Right Rear Height Sensor - Signal rate of change below threshold	■ Right-hand rear height sensor signal voltage stuck whilst vehicle is driven ■ Height sensor linkage disconnected	■ Check height sensor linkage is connected and not damaged. Visually inspect the wiring harness and connectors for water ingress. Where possible, refer to the guided diagnostic routine for this DTC on the approved diagnostic system

		■ Height sensor fault ■ Height sensor harness wiring short circuit to ground, short circuit to power or high resistance	
C1A06-27	Right Rear Height Sensor - Signal rate of change above threshold	■ Right- hand rear height sensor signal rate of change above threshold ■ Height sensor harness wiring short circuit to ground, short circuit to power or high resistance ■ Height sensor linkage disconnected ■ Height sensor fault	■ Check height sensor linkage is connected and not damaged. Visually inspect the wiring harness and connectors for water ingress. Where possible, refer to the guided diagnostic routine for this DTC on the approved diagnostic system
C1A06-29	Right Rear Height Sensor - Signal invalid	■ Right-hand rear height sensor signal invalid ■ Incorrect height calibration process	■ Using the manufacturer approved diagnostic system, perform routine - Suspension system - Height calibration - Located under 'Service Functions'

C1A06-78	Right Rear Height Sensor - Alignment or adjustment incorrect	■ Sensor alignment or adjustment incorrect; signal out of range ■ Height sensor linkage not connected ■ Height sensor linkage toggled ■ Height sensor loose ■ Height sensor bracket bent ■ Incorrect height calibration ■ Wiring to height sensor short to ground ■ Wiring to height sensor short to other cable ■ Height sensor electrical fault	**NOTE:** If any height sensor fixings are slackened or found to be loose, or a height sensor has been changed, using the manufacturer approved diagnostic system, perform routine - Suspension system - Height calibration - Located under 'Service Functions' ■ Check height sensor linkage is connected and not damaged. Visually inspect the height sensor for security, damage and correct orientation /installation. Check the sensor connector for damage. Refer to the electrical circuit diagrams and check the sensor circuit for continuity or short circuit. Repair/renew as necessary. Where possible, refer to the guided diagnostic routine for this DTC on the approved diagnostic system
C1A06-92	Right Rear Height Sensor - Performance or incorrect operation	■ Right-hand rear height sensor height changing slower than expected	**NOTE:**

		■ Axle valve block pipes incorrectly installed (unions reversed) ■ Height sensor incorrectly installed ■ A gallery pipe is blocked/damaged /crushed ■ An air spring pipe is blocked /damaged /crushed ■ Corner valve stuck shut (mechanically) ■ Reservoir valve stuck open (mechanically)	If any height sensor fixings are slackened or found to be loose, or a height sensor has been changed, using the manufacturer approved diagnostic system, perform routine - Suspension system - Height calibration - Located under 'Service Functions' ■ Check that the vehicle is free of obstructions. Check the height sensor for correct installation and torque of fixings. If necessary, calibrate the system using the approved diagnostic system. Where available, refer to the guided diagnostic routine for this DTC on the approved diagnostic system. Check for an air spring leak. Check the air harness for evidence of melting, crushing, kinking or collapsing. Check the front and rear valve block pipes for correct routing and installation. Check the reservoir valve block pipes for correct routing and installation. Refer to the approved diagnostic system for corner, reservoir and exhaust valve checks. Check the corner valve for leaks
C1A07-62	Cross Articulation - Signal compare failure	**NOTE:** This DTC may be set by a fault relating to any of the height sensors. It will only set if fault is	**NOTE:** If any height sensor fixings are slackened or found to be loose, or a height sensor has been changed, using the manufacturer approved diagnostic system, perform routine - Suspension system - Height calibration - Located under 'Service Functions'

			present and vehicle speed is greater than 55kph (35mph) for more than 25 seconds ■ Incorrect height calibration, e.g. height sensor removed and re-installed or renewed without re-calibrating ■ Height sensor linkage damaged /bent (after calibration) ■ Height sensor linkage loose /disconnected ■ Height sensor bracket damaged /bent ■ Height sensor harness wiring short circuit to ground, short circuit to power or high resistance	■ Follow the process detailed in the relevant special service message (SSM). Check the condition and security of the height sensor bracket(s). Check the height sensor for correct installation and fixings torque	

		■ Height sensor fault	
C1A08-1C	Pressure Sensor Supply - Circuit voltage out of range	■ Pressure sensor supply voltage out of range ■ Pressure sensor harness wiring short circuit to ground, short circuit to power or high resistance ■ Pressure sensor failure ■ Wiring to pressure sensor short to other cable	■ Where available, refer to the guided diagnostic routine for this DTC on the approved diagnostic system. Refer to the electrical circuit diagrams and check the pressure sensor circuit. Renew the sensor if faulty
C1A10-64	Pressure Fluctuates When System Inactive - Signal plausibility failure	■ Signal plausibility failure ■ Axle valve block pipes connected incorrectly ■ Pneumatic parts disconnected while system active ■ Corner valve stuck open (mechanically)	■ Check the air spring pipes from the front and rear valve blocks are connected to the correct ports. Where available, refer to the guided diagnostic routine for this DTC on the approved diagnostic system. Check for leaks. Refer to the electrical circuit diagrams and check the pressure sensor circuit. Renew the sensor if faulty

			■ Pressure sensor harness wiring short circuit to ground, short circuit to power or high resistance ■ Pressure sensor fault (calibration drift) ■ Pressure gallery leak ■ Exhaust valve fault	
	C1A11-64	Pressure Increases When System Inactive - Signal plausibility failure	■ Signal plausibility failure ■ Axle valve block pipes connected incorrectly ■ Corner valve internal leak ■ Reservoir valve internal leak ■ Pressure sensor harness wiring short circuit to ground, short circuit to power or high resistance ■ Pressure sensor fault	■ Check the reservoir and air spring pipes from the front and rear valve blocks are connected to the correct ports. Where available, refer to the guided diagnostic routine for this DTC on the approved diagnostic system. Refer to the electrical circuit diagrams and check the pressure sensor circuit. Renew the sensor if faulty

		■ Exhaust valve fault	
C1A13-64	Pressure Does Not Decrease When Venting Gallery - Signal plausibility failure	■ Signal plausibility failure ■ Reservoir valve block pipes incorrectly installed (unions reversed) ■ Exhaust valve stuck closed ■ Exhaust valve does not hold minimum retention pressure ■ Exhaust valve coil /wiring short circuit ■ Gallery pipe blocked/damaged ■ Air suspension exhaust silencer blocked/restricted ■ Axle valve block pipes connected incorrectly ■ Pressure sensor fault	■ Check the pipes from the reservoir valve block are connected to the correct ports. Where available, refer to the guided diagnostic routine for this DTC on the approved diagnostic system. Refer to the electrical circuit diagrams and check the pressure sensor circuit. Renew the sensor if faulty

C1A18-64	Pressure Increase Too Rapid When Filling Reservoir - Signal plausibility failure	■ Signal plausibility failure ■ Reservoir valve stuck closed (mechanically) ■ Reservoir pipe blocked/damaged ■ Reservoir port blocked/restricted ■ Pressure sensor fault	■ Where available, refer to the guided diagnostic routine for this DTC on the approved diagnostic system. Renew the sensor if faulty
C1A20-64	Pressure Increase Too Slow When Filling Reservoir - Signal plausibility failure	■ Signal plausibility failure ■ Gallery pipe air leak ■ Compressor fault ■ Reservoir pipe air leak ■ Reservoir air leak ■ Intake filter blocked/restricted ■ Intake pipe blocked/restricted ■ Air suspension intake silencer blocked/restricted ■ Corner valve stuck open	■ Where available, refer to the guided diagnostic routine for this DTC on the approved diagnostic system. Check the Air suspension intake pipe and silencer for blockage/restriction

C1A24-64	No Temperature Increase When Compressor Requested - Signal plausibility failure	■ Signal plausibility failure ■ Air compressor cylinder head temperature sensor disconnected ■ Air compressor cylinder head temperature sensor detached from cylinder head ■ Air compressor cylinder head temperature sensor fault	■ Check the security of the compressor cylinder head temperature sensor and electrical connection. Where available, refer to the guided diagnostic routine for this DTC on the approved diagnostic system
C1A24-67	No Temperature Increase When Compressor Requested - Signal incorrect after event	■ Signal plausibility failure ■ Air compressor cylinder head temperature sensor disconnected ■ Air compressor cylinder head temperature sensor fault ■ Air compressor disconnected	■ Check the security of the compressor cylinder head temperature sensor and electrical connection. Where available, refer to the guided diagnostic routine for this DTC on the approved diagnostic system

		■ Air compressor ground circuit high resistance ■ Air compressor fault	
C1A27-12	Compressor Circuit - Circuit short to battery	■ Compressor voltage present when compressor not requested ■ Air compressor harness wiring short circuit to power ■ Compressor voltage present when compressor not requested ■ Air compressor relay fault ■ Compressor motor connector disconnected ■ Compressor ground terminal loose	■ Where available, refer to the guided diagnostic routine for this DTC on the approved diagnostic system. Refer to the electrical circuit diagrams and check the compressor power supply circuit. Check the security and integrity of the compressor ground connection. Check the operation of the compressor relay. Repair/renew as necessary
C1A27-14	Compressor Circuit - Circuit short to ground or open	■ Compressor circuit short to ground or open circuit	■ Check/renew fuses as necessary. Where available, refer to the guided diagnostic routine for this DTC on the approved diagnostic system. Check the operation of the compressor relay. Repair/renew as necessary

		■ Air suspension control module supply (COMP_V) fuse in battery junction box failed ■ Air supply relay /air compressor supply fusible link in battery junction box failed/not installed ■ Air compressor relay failure	
C1A27-29	Compressor Circuit - Signal invalid	■ Compressor relay control voltage signal invalid	■ Refer to DTC C1A27-12 which will be set first
C1A28-64	Wrong Number of LEDs Illuminated - Signal plausibility failure	■ Switch pack disconnected ■ Air suspension control module supply (BATTERY) fuse in battery junction box failed ■ LED circuit short circuit to power	**NOTE:** Circuit reference - LED_NEG/HIGH_LED/ST_HT_LED/CRAWL_LED /ACCESS_HT_LED/RAISING_LED/LOWERING_LED ■ Check/renew fuses as necessary. Refer to the electrical circuit diagrams and check LED circuits for short circuit to ground, short circuit to power or open circuit. Repair as necessary. Check for high resistance between air suspension control module and center console switch pack. Check for one

		■ One or more LEDs short circuit to each other ■ Switch pack failure ■ Switch pack harness wiring short circuit to ground, short circuit to power or high resistance	or more LEDs short circuit to each other. Clear the DTCs and retest. If no fault was found with the above circuit tests and the DTC is persists, suspect center console switch pack
C1A29-92	Switch Activation Too Long - Performance or incorrect operation	■ Ride height change switch performance or incorrect operation ■ Switch pressed for more than 255 seconds ■ Switch pack harness wiring short circuit to ground, short circuit to power or high resistance ■ Switch pack failure	■ Where available, refer to the guided diagnostic routine for this DTC on the approved diagnostic system. Refer to the electrical circuit diagrams and check LOWER_SW and RAISE_SW circuits for short to ground, power, or between harness. Check for High resistance between air suspension control module and center console switch pack. Check switch pack for mechanical damage, stuck contacts. Clear the DTCs and retest. If no fault was found with the above circuit tests and the DTC is persists, suspect center console switch pack
C1A30-64	Both Switches Pressed At Same Time -	■ Signal plausibility failure	■ Check/renew fuse as necessary. Where available, refer to the guided diagnostic routine for this DTC on the approved diagnostic system. Refer to the electrical circuit diagrams and check LOWER_SW and RAISE_SW

	Signal plausibility failure	■ Air suspension control module supply (BATTERY) fuse in battery junction box failed ■ Switch pack harness wiring short circuit to ground ■ Switch pack failure	circuits for short to ground, power, or between harness. Check for High resistance between air suspension control module and center console switch pack. Check switch pack for mechanical damage, stuck contacts. Clear the DTCs and retest. If no fault was found with the above circuit tests and the DTC is persists, suspect center console switch pack
C1A31-01	Left Front Corner Valve - General electrical failure	■ Left-hand front corner valve general electrical failure ■ Front valve block disconnected ■ Front valve block circuit short circuit to ground, open circuit or high resistance ■ Left-hand front corner valve failure	■ Where available, refer to the guided diagnostic routine for this DTC on the approved diagnostic system. Refer to the electrical circuit diagrams and check valve circuit. Renew the valve block assembly if faulty. Clear the DTCs and retest
C1A32-01	Right Front Corner Valve - General		

	electrical failure	■ Right-hand front corner valve general electrical failure ■ Front valve block disconnected ■ Front valve block circuit short circuit to ground, open circuit or high resistance ■ Right-hand front corner valve failure	■ Where available, refer to the guided diagnostic routine for this DTC on the approved diagnostic system. Refer to the electrical circuit diagrams and check valve circuit. Renew the valve block assembly. Clear the DTCs and retest
C1A33-01	Left Rear Corner Valve - General electrical failure	■ Left-hand rear corner valve, general electrical failure ■ Rear valve block disconnected ■ Rear valve block circuit short circuit to ground, open circuit or high resistance ■ Left-hand rear corner valve failure	■ Where available, refer to the guided diagnostic routine for this DTC on the approved diagnostic system. Refer to the electrical circuit diagrams and check valve circuit. Renew the valve block assembly if faulty. Clear the DTCs and retest
C1A34-	Right Rear		

01	Corner Valve - General electrical failure	■ Right-hand rear corner valve general electrical failure ■ Rear valve block circuit short circuit to ground, open circuit or high resistance ■ Rear valve block disconnected ■ Right-hand rear corner valve failure	■ Where available, refer to the guided diagnostic routine for this DTC on the approved diagnostic system. Refer to the electrical circuit diagrams and check valve circuit. Renew the valve block assembly if faulty. Clear the DTCs and retest
C1A35-01	Reservoir Valve - General electrical failure	■ Reservoir valve general electrical failure ■ Reservoir valve block harness wiring short circuit to ground or open circuit ■ Reservoir valve block disconnected ■ Reservoir valve block failure	■ Where available, refer to the guided diagnostic routine for this DTC on the approved diagnostic system. Refer to the electrical circuit diagrams and check valve circuit. Renew the valve block assembly if faulty. Clear the DTCs and retest
C1A36-01	Exhaust Valve - General		■ Where available, refer to the guided diagnostic routine for this DTC on the approved diagnostic system. Refer to the electrical circuit diagrams and

	electrical failure	■ Exhaust valve general electrical failure ■ Exhaust valve harness wiring short circuit to ground or open circuit ■ Exhaust valve disconnected ■ Exhaust valve failure	check valve circuit. If exhaust valve is faulty, renew the compressor. Clear the DTCs and retest
C1A37-01	Front Cross-Link Valve - General electrical failure	■ Front cross-link valve general electrical failure ■ Front valve block harness wiring short circuit to ground or open circuit ■ Front valve block disconnected ■ Front cross-link valve failure	■ Where available, refer to the guided diagnostic routine for this DTC on the approved diagnostic system. Refer to the electrical circuit diagrams and check valve circuit. Renew the valve block assembly if faulty. Clear the DTCs and retest
C1A38-01	Rear Cross-Link Valve - General electrical failure	■ Rear cross-link valve general electrical failure ■ Rear valve block harness wiring	■ Where available, refer to the guided diagnostic routine for this DTC on the approved diagnostic system. Refer to the electrical circuit diagrams and check valve circuit. Renew the valve block assembly if faulty. Clear the DTCs and retest

		short circuit to ground or open circuit ■ Rear valve block disconnected ■ Rear cross-link valve failure	
C1A68-1C	Left Front Height Sensor Supply - Circuit voltage out of range	■ Left-hand front height sensor supply circuit voltage out of range ■ Height sensor harness wiring short circuit to ground or power ■ Height sensor failure	**NOTE:** If any height sensor fixings are slackened or found to be loose, or a height sensor has been changed, using the manufacturer approved diagnostic system, perform routine - Suspension system - Height calibration - Located under 'Service Functions' ■ Where available, refer to the guided diagnostic routine for this DTC on the approved diagnostic system. Check the height sensor connector for damage and security. Refer to the electrical circuit diagrams and check height sensor circuit. Renew the sensor if faulty. Clear the DTCs and retest
C1A69-1C	Right Front Height Sensor Supply - Circuit voltage out of range	■ Right-hand front height sensor supply circuit voltage out of range ■ Height sensor harness wiring short circuit to ground or power	**NOTE:** If any height sensor fixings are slackened or found to be loose, or a height sensor has been changed, using the manufacturer approved diagnostic system, perform routine - Suspension system - Height calibration - Located under 'Service Functions' ■ Where available, refer to the guided diagnostic routine for this DTC on the approved diagnostic system. Check the height sensor connector for

		■ Height sensor failure	damage and security. Refer to the electrical circuit diagrams and check height sensor circuit. Renew the sensor if faulty. Clear the DTCs and retest
C1A70-1C	Left Rear Height Sensor Supply - Circuit voltage out of range	■ Left-hand rear height sensor supply circuit voltage out of range ■ Height sensor harness wiring short circuit to ground, short circuit to power or high resistance ■ Height sensor failure	**NOTE:** If any height sensor fixings are slackened or found to be loose, or a height sensor has been changed, using the manufacturer approved diagnostic system, perform routine - Suspension system - Height calibration - Located under 'Service Functions' ■ Where available, refer to the guided diagnostic routine for this DTC on the approved diagnostic system. Check the height sensor connector for damage and security. Refer to the electrical circuit diagrams and check height sensor circuit. Renew the sensor if faulty. Clear the DTCs and retest
C1A71-1C	Right Rear Height Sensor Supply - Circuit voltage out of range	■ Right-hand rear height sensor supply circuit voltage out of range ■ Height sensor harness wiring short circuit to ground or power ■ Height sensor failure	**NOTE:** If any height sensor fixings are slackened or found to be loose, or a height sensor has been changed, using the manufacturer approved diagnostic system, perform routine - Suspension system - Height calibration - Located under 'Service Functions' ■ Where available, refer to the guided diagnostic routine for this DTC on the approved diagnostic system. Check the height sensor connector for damage and security. Refer to the electrical circuit diagrams and check height sensor circuit. Renew the sensor if faulty. Clear the DTCs and retest
C1A99-	Pressure		

1C	Sensor - Circuit voltage out of range	■ Pressure sensor circuit voltage out of range ■ Sensor disconnected ■ Pressure sensor circuit short circuit to ground or to each other ■ Pressure sensor fault	■ Where available, refer to the guided diagnostic routine for this DTC on the approved diagnostic system. Check the sensor connector for damage and security. Refer to the electrical circuit diagrams and check height sensor circuit. Renew the sensor if faulty. Clear the DTCs and retest
C1B18-62	Supply Voltage X-Ref Check - Signal compare failure	■ Signal compare failure ■ Inconsistent battery and ignition voltages received by air suspension control module ■ Air suspension control module supply circuit(s) short circuit to ground ■ Air suspension control module supply circuit(s) high resistance	■ Where available, refer to the guided diagnostic routine for this code on the approved diagnostic system. Refer to the electrical circuit diagrams and check the power supply circuits to the module. Check the module connector for security and integrity
C1B21-	Compressor		

1C	Brush Card Temperature Sensor Circuit - Circuit voltage out of range	■ Compressor brush card temperature sensor circuit voltage out of range ■ Compressor brush card temperature sensor harness wiring short circuit to ground, short circuit to power or high resistance ■ Compressor brush card temperature sensor failure	■ Where available, refer to the guided diagnostic routine for this code on the approved diagnostic system. Refer to the electrical circuit diagrams and check the compressor temperature circuit between the compressor and the module. Renew the compressor if temperature sensor faulty
U0073-88	Control Module Communication Bus 'A' Off - Bus off	■ CAN Bus connections short circuit to each other	■ Refer to the electrical circuit diagrams and check the power and ground connections to the air suspension control module. Using the manufacturer approved diagnostic system, complete a CAN network integrity test. Refer to the electrical circuit diagrams and check the CAN network
U0100-00	Lost Communication With ECM/PCM "A" - No sub type information	■ CAN Bus fault	■ Refer to the electrical circuit diagrams and check the power and ground connections to the engine control module. Using the manufacturer approved diagnostic system, complete a CAN network integrity test. Refer to the electrical circuit diagrams and check the CAN network between the engine control module and the air suspension control module
U0101-00	Lost Communication	■ CAN Bus fault	■ Refer to the electrical circuit diagrams and check the power and ground connections to the transmission control module. Using the manufacturer

	With Transmission Control Module - No sub type information		approved diagnostic system, complete a CAN network integrity test. Refer to the electrical circuit diagrams and check the CAN network between the transmission control module and the air suspension control module
U0102-00	Lost Communication With Transfer Case Control Module - No sub type information	■ CAN Bus fault	■ Refer to the electrical circuit diagrams and check the power and ground connections to the transfer case control module. Using the manufacturer approved diagnostic system, complete a CAN network integrity test. Refer to the electrical circuit diagrams and check the CAN network between the transfer case control module and the air suspension control module
U0122-00	Lost Communication With Vehicle Dynamics Control Module - No sub type information	■ CAN Bus fault	■ Refer to the electrical circuit diagrams and check the power and ground connections to the vehicle dynamics control module. Using the manufacturer approved diagnostic system, complete a CAN network integrity test. Refer to the electrical circuit diagrams and check the CAN network between the vehicle dynamics control module and the air suspension control module
U0126-00	Lost Communication With Steering Angle Sensor Module - No sub type information	■ CAN Bus fault	■ Refer to the electrical circuit diagrams and check the power and ground connections to the steering angle sensor module. Using the manufacturer approved diagnostic system, complete a CAN network integrity test. Refer to the electrical circuit diagrams and check the CAN network between the steering angle sensor module and the air suspension control module
U0128-00	Lost Communication With Park Brake Module - No sub type information	■ CAN Bus fault	■ Refer to the electrical circuit diagrams and check the power and ground connections to the park brake module. Using the manufacturer approved diagnostic system, complete a CAN network integrity test. Refer to the electrical circuit diagrams and check the CAN network between the park brake module and the air suspension control module

U0133-00	Lost Communication With Active Roll Control Module - No sub type information	■ CAN Bus fault	■ Refer to the electrical circuit diagrams and check the power and ground connections to the active roll control module. Using the manufacturer approved diagnostic system, complete a CAN network integrity test. Refer to the electrical circuit diagrams and check the CAN network between the active roll control module and the air suspension control module
U0136-00	Lost Communication With Differential Control Module - Rear - No sub type information	■ CAN Bus fault	■ Refer to the electrical circuit diagrams and check the power and ground connections to the differential control module. Using the manufacturer approved diagnostic system, complete a CAN network integrity test. Refer to the electrical circuit diagrams and check the CAN network between the differential control module and the air suspension control module
U0138-00	Lost Communication with All Terrain Control Module - No sub type information	■ CAN bus fault	■ Refer to the electrical circuit diagrams and check the power and ground connections to the all terrain control module. Using the manufacturer approved diagnostic system, complete a CAN network integrity test. Refer to the electrical circuit diagrams and check the CAN network between the all terrain control module and the air suspension control module
U0140-00	Lost Communication With Body Control Module - No sub type information	■ CAN bus fault	■ Refer to the electrical circuit diagrams and check the power and ground connections to the body control module. Using the manufacturer approved diagnostic system, complete a CAN network integrity test. Refer to the electrical circuit diagrams and check the CAN network between the generic electronic module and the air suspension control module
U0300-55	Internal Control Module Software Incompatibility - Not configured	■ Incorrect software loaded	■ Using the manufacturer approved diagnostic system, re-configure the air suspension control module and instrument cluster with the latest level software as necessary

		■ CAN wiring to generic electronic module high resistance ■ Incorrect instrument cluster CAN configuration	
U0416-68	Invalid Data Received From Vehicle Dynamics Control Module - Event information	■ Invalid data received from vehicle dynamics control module	■ Check the vehicle dynamics control module for related DTCs and refer to the relevant DTC index
U0417-68	Invalid Data Received From Park Brake Control Module - Event information	■ Invalid data received from park brake control module	■ Check the park brake control module for related DTCs and refer to the relevant DTC index
U0428-68	Invalid Data Received From Steering Angle Sensor Module (SASM) - Event information	■ Invalid data received from steering angle sensor module	■ Check the steering angle sensor module for related DTCs and refer to the relevant DTC index
U1A14-49	CAN Initialization Failure - Internal	■ Air suspension control module failure	■ Refer to the electrical circuit diagrams and check the power and ground connections to the module. Using the manufacturer approved diagnostic system, complete a CAN network integrity test. Refer to the electrical circuit diagrams and check the CAN network

	electronic failure		
U2000-67	Motor Temperature - Signal incorrect after event	■ Motor signal incorrect after event ■ Compressor brush card temperature sensor not connected electrically ■ Compressor brush card temperature sensor failure ■ Compressor disconnected ■ Compressor ground connection disconnected	■ Where possible, refer to the guided diagnostic routine for this DTC on the approved diagnostic system. Check the compressor connector for security and integrity. Check the compressor ground connection. Renew the compressor if temperature sensor faulty
U2007-11	Valve(s) - Circuit short to ground	■ Valve circuit short circuit to ground when system is inactive ■ Water ingress to wiring harness or connectors ■ Valve harness wiring short	■ Visually inspect the wiring harness and connectors between the air suspension control module and the control valves for water ingress. Refer to the electrical circuit diagrams and check the valve circuits

		circuit to ground or high resistance	
U2007-67	Valve(s) - Signal incorrect after event	■ Valve signal incorrect after event ■ Valve positive connections shorted to power or ground ■ Electrical leakage between permanent battery volts and any valve positive connection	■ Visually inspect the wiring harness and connectors between the air suspension control module and the control valves for water ingress. Where possible, refer to the guided diagnostic routine for this DTC on the approved diagnostic system
U210A-16	Temperature Sensor - Circuit voltage below threshold	■ Compressor cylinder head temperature sensor circuit voltage below threshold ■ Temperature sensor circuit short to ground or short to other cable	■ Refer to the electrical circuit diagrams and check the compressor temperature circuit between the compressor and the control module. Renew the compressor assembly
U3000-05	Control Module - System		

	Programming Failures	■ System programming failure	■ This DTC is not a fault but is logged when the air suspension has been set in tight tolerance mode. Use the manufacturers approved diagnostic equipment to set system into normal (customer) mode
U3000-1C	Control Module - Circuit voltage out of range	■ Circuit voltage out of range ■ Vehicle battery voltage has been too low to operate the air suspension system ■ Valve positive circuit intermittent short to ground	■ This may not be a fault. Check the battery state of charge and check for other DTCs that would determine a discharged battery condition. Clear the DTCs and retest. If the DTC persists, visually inspect the wiring harness and connectors between the air suspension control module and the control valves for water ingress. Refer to the electrical circuit diagrams and check the valve circuits
U3000-1D	Control Module - Circuit current out of range	■ Circuit current out of range ■ Rear valve block disconnected ■ Any valve positive short circuit to ground (more than 20A flowing)	■ Check the rear valve block connector for security and integrity (rear axle valve block is used as part of power-up diagnostic check). Refer to the electrical circuit diagrams and check the valve circuits
U3000-49	Control Module - Internal electronic failure	■ Air suspension control module failure	■ Renew the air suspension control module. Refer to the warranty policy and procedures manual if a module is suspect

U3000-52	Control Module - Not activated	■ Not activated	■ This DTC is not a fault, the control module has been set into manufacturing mode using diagnostic tester. Using the manufacturer approved diagnostic equipment set system into normal (customer) mode
U3000-53	Control Module - De-activated	■ Deactivated	■ This DTC is not a fault, the system has been deflated using the diagnostic deflation routine. Clear deflation routine using manufacturers approved diagnostic equipment
U3000-54	Control Module - Missing calibration	■ Vehicle Ride Height Calibration routine not completed	△ NOTE: This DTC is for information only ■ Using the manufacturer approved diagnostic system, perform routine - Suspension system - Height calibration - Located under 'Service Functions'
U3000-55	Control Module - Not configured	■ Missing calibration	■ This DTC is not a fault, the system (height sensors) have not been calibrated ■ Using the manufacturer approved diagnostic system, perform routine - Suspension system - Height calibration - Located under 'Service Functions'
U3002-62	Vehicle Identification Number - Signal compare failure	■ Signal compare failure ■ Air suspension control module has been swapped from another vehicle (NOTE Air suspension	■ Using the manufacturer approved diagnostic system, program the relevant module ■ Using the manufacturer approved diagnostic system, perform routine - Suspension system - Height calibration - Located under 'Service Functions'

		requires re-calibration) ■ Instrument pack has been changed and not re-coded	
U300D-01	Ignition Input On/Start - General electrical failure	■ General electrical failure ■ Ignition fuse failed/missing ■ No wake-up signal to ECU	■ Refer to the electrical circuit diagrams and check the power supply fuse and circuit to the module

2012.0 RANGE ROVER (LM), 100-00

GENERAL INFORMATION

DESCRIPTION AND OPERATION

ANTI-LOCK BRAKING SYSTEM (ABS)

CAUTION:

Diagnosis by substitution from a donor vehicle is **NOT** acceptable. Substitution of control modules does not guarantee confirmation of a fault, and may also cause additional faults in the vehicle being tested and/or the donor vehicle

NOTES:

- If the control module or a component is suspect and the vehicle remains under manufacturer warranty, refer to the warranty policy and procedures manual, or determine if any prior approval programme is in operation, prior to the installation of a new module/component
- Generic scan tools may not read the codes listed, or may read only 5-digit codes. Match the 5 digits from the scan tool to the first 5 digits of the 7-digit code listed to identify the fault (the last 2 digits give extra information read by the manufacturer-approved diagnostic system)
- When performing voltage or resistance tests, always use a digital multimeter accurate to three decimal places and with a current calibration certificate. When testing resistance, always take the resistance of the digital multimeter leads into account
- Check and rectify basic faults before beginning diagnostic routines involving pinpoint tests
- Inspect connectors for signs of water ingress, and pins for damage and/or corrosion
- If diagnostic trouble codes are recorded and, after performing the pinpoint tests, a fault is not present, an intermittent concern may be the cause. Always check for loose connections and corroded terminals
- Where an 'on demand self-test' is referred to, this can be accessed via the 'diagnostic trouble code monitor' tab on the manufacturers approved diagnostic system
- Check DDW for open campaigns. Refer to the corresponding bulletins and SSMs which may be valid for the specific customer complaint and carry out the recommendations as required

The table below lists all Diagnostic Trouble Codes (DTCs) that could be logged in the Anti-Lock Braking System module, for additional Diagnosis and Testing information refer to the relevant Diagnosis and Testing Section. For additional information, refer to: Anti-Lock Control - Traction Control (206-09A Anti-Lock Control - Traction Control, Diagnosis and Testing).

DTC	DESCRIPTION	POSSIBLE CAUSES	ACTION
C0030-38	Left Front Tone Wheel - Signal frequency incorrect	■ Signal frequency incorrect ■ Damaged ABS sensor ring	■ Check front left wheel speed sensor ring for missing teeth or damage. After rectification, either clear the DTCs and cycle the ignition or cycle the ignition and drive the vehicle above 15kph to ensure the lamps extinguish. When cycling the ignition, allow sufficient time for the 'P' symbol illumination to extinguish on the gear shifter (if installed) before returning the ignition state to on
C0031-14	Left Front Wheel Speed Sensor - Circuit short to ground or open	■ Sensor short circuit to ground or open circuit ■ Sensor fault	■ Check the sensor lead and connector for damage. If damaged, renew the sensor. Refer to the electrical circuit diagrams and check the circuit between the sensor and the ABS module
C0031-25	Left Front Wheel Speed Sensor - Signal shape /waveform failure	■ Sensor short circuit to ground ■ Sensor fault	■ Check the sensor lead and connector for damage. If damaged, renew the sensor. Refer to the electrical circuit diagrams and check the circuit between the sensor and the ABS module. After rectification, either clear the DTCs and cycle the ignition or cycle the ignition and drive the vehicle above 15kph to ensure the lamps extinguish. When cycling the ignition, allow sufficient time for the 'P' symbol illumination to extinguish on the gear shifter (if installed) before returning the ignition state to on
C0031-2F	Left Front Wheel Speed Sensor - Signal erratic	■ Sensor circuit fault ■ Sensor fault	■ Check the sensor lead and connector for damage. If damaged, renew the sensor. Refer to the electrical circuit diagrams and check the circuit between the sensor and the ABS module. After rectification, either clear the DTCs and cycle the ignition or cycle the ignition and drive the vehicle

			above 15kph to ensure the lamps extinguish. When cycling the ignition, allow sufficient time for the 'P' symbol illumination to extinguish on the gear shifter (if installed) before returning the ignition state to on
C0031-31	Left Front Wheel Speed Sensor - No signal	■ No sensor signal ■ Sensor fault	■ Check the sensor lead and connector for damage. If damaged, renew the sensor. Refer to the electrical circuit diagrams and check the circuit between the sensor and the ABS module. After rectification, either clear the DTCs and cycle the ignition or cycle the ignition and drive the vehicle above 15kph to ensure the lamps extinguish. When cycling the ignition, allow sufficient time for the 'P' symbol illumination to extinguish on the gear shifter (if installed) before returning the ignition state to on
C0031-62	Left Front Wheel Speed Sensor - Signal compare failure	■ Sensor signal compare failure ■ Sensor fault	■ Check the sensor lead and connector for damage. If damaged, renew the sensor. Refer to the electrical circuit diagrams and check the circuit between the sensor and the ABS module. After rectification, either clear the DTCs and cycle the ignition or cycle the ignition and drive the vehicle above 15kph to ensure the lamps extinguish. When cycling the ignition, allow sufficient time for the 'P' symbol illumination to extinguish on the gear shifter (if installed) before returning the ignition state to on
C0031-64	Left Front Wheel Speed Sensor - Signal plausibility failure	■ Sensor signal plausibility failure ■ Sensor fault	■ Check the sensor lead and connector for damage. If damaged, renew the sensor. Refer to the electrical circuit diagrams and check the circuit between the sensor and the ABS module
C0033-38	Right Front Tone Wheel - Signal frequency incorrect	■ Signal frequency incorrect ■ Damaged ABS sensor ring	■ Check front right wheel speed sensor ring for missing teeth or damage. After rectification, either clear the DTCs and cycle the ignition or cycle the ignition and drive the vehicle above 15kph to ensure the lamps extinguish. When cycling the ignition, allow sufficient time for the 'P' symbol illumination to extinguish on the gear shifter (if installed) before returning the ignition state to on

C0034-14	Right Front Wheel Speed Sensor - Circuit short to ground or open	■ Sensor short circuit to ground or open ■ Sensor fault	■ Check the sensor lead and connector for damage. If damaged, renew the sensor. Refer to the electrical circuit diagrams and check the circuit between the sensor and the ABS module. After rectification, either clear the DTCs and cycle the ignition or cycle the ignition and drive the vehicle above 15kph to ensure the lamps extinguish. When cycling the ignition, allow sufficient time for the 'P' symbol illumination to extinguish on the gear shifter (if installed) before returning the ignition state to on
C0034-25	Right Front Wheel Speed Sensor - Signal shape /waveform failure	■ Sensor signal shape / waveform failure ■ Sensor short circuit to ground ■ Sensor fault	■ Check the sensor lead and connector for damage. If damaged, renew the sensor. Refer to the electrical circuit diagrams and check the circuit between the sensor and the ABS module. After rectification, either clear the DTCs and cycle the ignition or cycle the ignition and drive the vehicle above 15kph to ensure the lamps extinguish. When cycling the ignition, allow sufficient time for the 'P' symbol illumination to extinguish on the gear shifter (if installed) before returning the ignition state to on
C0034-2F	Right Front Wheel Speed Sensor - Signal erratic	■ Sensor signal erratic ■ Sensor fault	■ Check the sensor lead and connector for damage. If damaged, renew the sensor. Refer to the electrical circuit diagrams and check the circuit between the sensor and the ABS module. After rectification, either clear the DTCs and cycle the ignition or cycle the ignition and drive the vehicle above 15kph to ensure the lamps extinguish. When cycling the ignition, allow sufficient time for the 'P' symbol illumination to extinguish on the gear shifter (if installed) before returning the ignition state to on
C0034-31	Right Front Wheel Speed Sensor - No signal	■ No sensor signal ■ Sensor fault	■ Check the sensor lead and connector for damage. If damaged, renew the sensor. Refer to the electrical circuit diagrams and check the circuit between the sensor and the ABS module. After rectification, either clear the DTCs and cycle the ignition or cycle the ignition and drive the vehicle above 15kph to ensure the lamps extinguish. When cycling the ignition, allow sufficient time for the 'P' symbol illumination to extinguish on the gear shifter (if installed) before returning the ignition state to on
C0034-	Right Front		

62	Wheel Speed Sensor - Signal compare failure	■ Sensor signal compare failure ■ Sensor fault	■ Check the sensor lead and connector for damage. If damaged, renew the sensor. Refer to the electrical circuit diagrams and check the circuit between the sensor and the ABS module. After rectification, either clear the DTCs and cycle the ignition or cycle the ignition and drive the vehicle above 15kph to ensure the lamps extinguish. When cycling the ignition, allow sufficient time for the 'P' symbol illumination to extinguish on the gear shifter (if installed) before returning the ignition state to on
C0034-64	Right Front Wheel Speed Sensor - Signal plausibility failure	■ Sensor signal plausibility failure ■ Sensor fault	■ Check the sensor lead and connector for damage. If damaged, renew the sensor. Refer to the electrical circuit diagrams and check the circuit between the sensor and the ABS module
C0036-38	Left Rear Tone Wheel - Signal frequency incorrect	■ Signal frequency incorrect ■ Damaged ABS sensor ring	■ Check rear left wheel speed sensor ring for missing teeth or damage. After rectification, either clear the DTCs and cycle the ignition or cycle the ignition and drive the vehicle above 15kph to ensure the lamps extinguish. When cycling the ignition, allow sufficient time for the 'P' symbol illumination to extinguish on the gear shifter (if installed) before returning the ignition state to on
C0037-14	Left Rear Wheel Speed Sensor - Circuit short to ground or open	■ Sensor short circuit to ground or open circuit ■ Sensor fault	■ Check the sensor lead and connector for damage. If damaged, renew the sensor. Refer to the electrical circuit diagrams and check the circuit between the sensor and the ABS module
C0037-25	Left Rear Wheel Speed Sensor - Signal shape /waveform failure	■ Sensor signal shape / waveform failure ■ Sensor short circuit to ground ■ Sensor fault	■ Check the sensor lead and connector for damage. If damaged, renew the sensor. Refer to the electrical circuit diagrams and check the circuit between the sensor and the ABS module. After rectification, either clear the DTCs and cycle the ignition or cycle the ignition and drive the vehicle above 15kph to ensure the lamps extinguish. When cycling the ignition, allow sufficient time for the 'P' symbol illumination to extinguish on the gear shifter (if installed) before returning the ignition state to on

C0037-2F	Left Rear Wheel Speed Sensor - Signal erratic	■ Sensor signal erratic ■ Sensor fault	■ Check the sensor lead and connector for damage. If damaged, renew the sensor. Refer to the electrical circuit diagrams and check the circuit between the sensor and the ABS module. After rectification, either clear the DTCs and cycle the ignition or cycle the ignition and drive the vehicle above 15kph to ensure the lamps extinguish. When cycling the ignition, allow sufficient time for the 'P' symbol illumination to extinguish on the gear shifter (if installed) before returning the ignition state to on
C0037-31	Left Rear Wheel Speed Sensor - No signal	■ No sensor signal ■ Sensor fault	■ Check the sensor lead and connector for damage. If damaged, renew the sensor. Refer to the electrical circuit diagrams and check the circuit between the sensor and the ABS module. After rectification, either clear the DTCs and cycle the ignition or cycle the ignition and drive the vehicle above 15kph to ensure the lamps extinguish. When cycling the ignition, allow sufficient time for the 'P' symbol illumination to extinguish on the gear shifter (if installed) before returning the ignition state to on
C0037-62	Left Rear Wheel Speed Sensor - Signal compare failure	■ Sensor signal compare failure ■ Sensor fault	■ Check the sensor lead and connector for damage. If damaged, renew the sensor. Refer to the electrical circuit diagrams and check the circuit between the sensor and the ABS module. After rectification, either clear the DTCs and cycle the ignition or cycle the ignition and drive the vehicle above 15kph to ensure the lamps extinguish. When cycling the ignition, allow sufficient time for the 'P' symbol illumination to extinguish on the gear shifter (if installed) before returning the ignition state to on
C0037-64	Left Rear Wheel Speed Sensor - Signal plausibility failure	■ Sensor signal plausibility failure ■ Sensor fault	■ Check the sensor lead and connector for damage. If damaged, renew the sensor. Refer to the electrical circuit diagrams and check the circuit between the sensor and the ABS module
C0039-38	Right Rear Tone Wheel -	■ Signal frequency incorrect	■ Check rear right wheel speed sensor ring for missing teeth or damage. After rectification, either clear the DTCs and cycle the ignition or cycle the

	Signal frequency incorrect	■ Damaged ABS sensor ring	ignition and drive the vehicle above 15kph to ensure the lamps extinguish. When cycling the ignition, allow sufficient time for the 'P' symbol illumination to extinguish on the gear shifter (if installed) before returning the ignition state to on
C003A-14	Right Rear Wheel Speed Sensor - Circuit short to ground or open	■ Sensor short circuit to ground or open circuit ■ Sensor fault	■ Check the sensor lead and connector for damage. If damaged, renew the sensor. Refer to the electrical circuit diagrams and check the circuit between the sensor and the ABS module
C003A-25	Right Rear Wheel Speed Sensor - Signal shape /waveform failure	■ Sensor signal shape / waveform failure ■ Sensor short circuit to ground ■ Sensor fault	■ Check the sensor lead and connector for damage. If damaged, renew the sensor. Refer to the electrical circuit diagrams and check the circuit between the sensor and the ABS module. After rectification, either clear the DTCs and cycle the ignition or cycle the ignition and drive the vehicle above 15kph to ensure the lamps extinguish. When cycling the ignition, allow sufficient time for the 'P' symbol illumination to extinguish on the gear shifter (if installed) before returning the ignition state to on
C003A-2F	Right Rear Wheel Speed Sensor - Signal erratic	■ Sensor signal erratic ■ Sensor fault	■ Check the sensor lead and connector for damage. If damaged, renew the sensor. Refer to the electrical circuit diagrams and check the circuit between the sensor and the ABS module. After rectification, either clear the DTCs and cycle the ignition or cycle the ignition and drive the vehicle above 15kph to ensure the lamps extinguish. When cycling the ignition, allow sufficient time for the 'P' symbol illumination to extinguish on the gear shifter (if installed) before returning the ignition state to on
C003A-31	Right Rear Wheel Speed Sensor - No signal	■ No sensor signal ■ Sensor fault	■ Check the sensor lead and connector for damage. If damaged, renew the sensor. Refer to the electrical circuit diagrams and check the circuit between the sensor and the ABS module. After rectification, either clear the DTCs and cycle the ignition or cycle the ignition and drive the vehicle

			above 15kph to ensure the lamps extinguish. When cycling the ignition, allow sufficient time for the 'P' symbol illumination to extinguish on the gear shifter (if installed) before returning the ignition state to on
C003A-62	Right Rear Wheel Speed Sensor - Signal compare failure	■ Sensor signal compare failure ■ Sensor fault	■ Check the sensor lead and connector for damage. If damaged, renew the sensor. Refer to the electrical circuit diagrams and check the circuit between the sensor and the ABS module. After rectification, either clear the DTCs and cycle the ignition or cycle the ignition and drive the vehicle above 15kph to ensure the lamps extinguish. When cycling the ignition, allow sufficient time for the 'P' symbol illumination to extinguish on the gear shifter (if installed) before returning the ignition state to on
C003A-64	Right Rear Wheel Speed Sensor - Signal plausibility failure	■ Sensor signal plausibility failure ■ Sensor fault	■ Check the sensor lead and connector for damage. If damaged, renew the sensor. Refer to the electrical circuit diagrams and check the circuit between the sensor and the ABS module
C0051-28	Steering Wheel Position Sensor - Signal bias level out of range/zero adjustment failure	■ Signal bias level out of range/zero adjustment failure ■ Incorrect angle sensor installed ■ Wheel speed sensor wiring incorrectly wired across one axle ■ Steering angle sensor fault	■ Check for a correctly installed steering angle sensor. Refer to the electrical circuit diagrams and check the circuit between the wheel speed sensors and the ABS module to ensure the sensors on one axle are correctly wired to the correct control module left or right pin outs. Renew the steering angle sensor. After rectification, either clear the DTCs and cycle the ignition or cycle the ignition and drive the vehicle (not always in a straight line) for at least 9 seconds to ensure the lamps extinguish. When cycling the ignition, allow sufficient time for the 'P' symbol illumination to extinguish on the gear shifter (if installed) before returning the ignition state to on
C0051-	Steering Wheel		

67	Position Sensor - Signal incorrect after event	■ Sensor signal incorrect after event ■ Steering angle sensor fault ■ Control module software error	■ Check for other DTCs that may aid diagnosis, especially in the steering angle sensor module. Renew the steering angle sensor. Clear the DTC and retest. If the problem persists, renew the ABS control module. Refer to the warranty policy and procedures manual if a module is suspect
C0062-28	Longitudinal Acceleration Sensor - Signal bias level out of range/zero adjustment failure	■ Sensor signal bias level out of range/zero adjustment failure ■ Incorrectly installed sensor	■ Check installation and mounting of sensor cluster. Clear the DTC and retest, if problem persists renew the sensor. After rectification, either clear the DTCs and cycle the ignition or cycle the ignition and drive the vehicle above 15kph to ensure the lamps extinguish. When cycling the ignition, allow sufficient time for the 'P' symbol illumination to extinguish on the gear shifter (if installed) before returning the ignition state to on
C0062-54	Longitudinal Acceleration Sensor - Missing calibration	■ Sensor missing calibration ■ Incorrect sensor installed ■ Incorrectly configured sensor	■ Ensure the correct sensor has been installed. Check mounting, connector and fuse of the sensor. Configure the sensor cluster using the manufacturers approved diagnostic system
C0062-64	Longitudinal Acceleration Sensor - Signal plausibility failure	■ Sensor signal plausibility failure ■ Incorrectly installed sensor	■ Clear the DTC and retest. Check mounting, connector and fuse of the sensor. Configure the sensor cluster using the manufacturers approved diagnostic system
C0063-	Yaw Rate		

14	Sensor - Circuit short to ground or open	■ Sensor circuit short to ground or open ■ Sensor fault	■ The most likely cause of the fault is an open circuit on the harness. Refer to the electrical circuit diagrams and check the circuit between the sensor and the control module. Repair as necessary. Clear the DTC and retest. If the problem persists, renew the sensor
C0063-1C	Yaw Rate Sensor - Circuit voltage out of range	■ Sensor circuit voltage out of range	■ Refer to the electrical circuit diagrams and check the sensor power supply circuit
C0063-27	Yaw Rate Sensor - Signal rate of change above threshold	■ Sensor circuit power supply fuse failure ■ Sensor insecurely mounted ■ Sensor fault ■ Control module software error	■ Refer to the electrical circuit diagrams and check the sensor power supply fuse. Check the yaw rate sensor connector condition. Ensure the sensor is correctly secured. If problem persists, renew the sensor. If the problem still persists, renew the ABS control module. Refer to the warranty policy and procedures manual if a module is suspect
C0063-28	Yaw Rate Sensor - Signal bias level out of range/zero adjustment failure	■ Sensor signal bias level out of range/zero adjustment failure ■ Sensor insecurely mounted ■ Sensor fault	■ Ensure the sensor is correctly secured. If problem persists, renew the sensor

C0063-41	Yaw Rate Sensor - General checksum failure	■ Sensor general checksum failure ■ Sensor fault ■ Control module fault	■ Renew the sensor. If the problem persists, renew the ABS control module. Refer to the warranty policy and procedures manual if a module is suspect
C0063-4A	Yaw Rate Sensor - Incorrect component installed	■ Incorrect sensor installed	■ Clear the DTC and retest. If the fault still exists renew the Yaw rate sensor with the suitable sensor cluster and repeat test cycle
C0063-49	Yaw Rate Sensor - Internal electronic failure	■ Sensor internal electronic failure	■ Clear the DTC and retest. If the problem persists, renew the sensor
C0063-64	Yaw Rate Sensor - Signal plausibility failure	■ Sensor signal plausibility failure ■ The sensor value is not within the expected range compared to the steering angle sensor. ■ Sensor insecurely mounted	**NOTE:** This DTC can be set if the vehicle is being tested on chassis dyno rollers. ■ Ensure the sensor is correctly secured. Check that the steering angle sensor is correctly calibrated using the manufacturers recommended diagnostic system. If problem persists, renew the sensor. After rectification, either clear the DTCs and cycle the ignition or cycle the ignition and drive the vehicle above 80kph (not always in a straight line) to ensure the lamps extinguish. When cycling the ignition, allow sufficient time for the 'P' symbol illumination to extinguish on the gear shifter (if installed) before returning the ignition state to on

C0063-86	Yaw Rate Sensor - Signal invalid	■ Sensor signal invalid ■ Incorrectly configured sensor	■ Clear the DTC and retest. If the problem persists, renew the sensor
C0063-95	Yaw Rate Sensor - Incorrect assembly	■ Sensor incorrect assembly /internal sensor fault	■ Ensure the correct sensor has been installed. Clear the DTC and retest. If the problem persists, renew the sensor. If the problem persists, renew the ABS control module. Refer to the warranty policy and procedures manual if a module is suspect
C0063-96	Yaw Rate Sensor - Component internal failure	■ Sensor power supply intermittent connection ■ Sensor ground intermittent connection ■ Sensor internal failure	■ Refer to the electrical circuit diagrams and check the sensor power supply and ground connections to the sensor. Check the sensor connecter and ABS module for security and integrity (water ingress of damaged pins). If the problem persists, renew the yaw rate sensor. Calibrate the new sensor using the manufacturers approved diagnostic system. If the fault returns after an ignition cycle, renew the control module. Refer to the warranty policy and procedures manual if a module is suspect
C0064-64	Roll Rate Sensor - Signal plausibility failure	■ Sensor signal plausibility failure ■ Sensor insecurely mounted	■ Ensure the sensor is correctly installed/secured. Clear DTC and Retest. If problem persists, renew the sensor
C006A-54	Multi-axis Acceleration	■ Sensor missing calibration ■ Serial number of yaw rate sensor	■ Check that the correct sensor has been installed. Configure the sensor cluster using the manufacturers approved diagnostic system. If calibration fails several times, renew the control module. Refer to the warranty policy and procedures manual if a module is suspect

	Sensor - Missing calibration	saved in stored in control module memory does not match serial number of sensor ■ Incorrect sensor installed ■ Installed sensor not correctly calibrated	
C0072-4B	Brake Temperature Too High - Over temperature	■ Excessive use of brakes ■ Excessive use of traction control system	■ This DTC is for information only. Clear the DTC
C101F-49	Generic Valve Failure - Internal electronic failure	■ ABS modulator internal fault	■ Renew the control module. Refer to the warranty policy and procedures manual if a module is suspect
C1109-24	Vehicle Dynamics Control Switch - Signal stuck high	■ Signal stuck high - DSC Switch operation fault ■ If the DSC switch is pressed for longer than 1 minute, the	■ Check the switch operation. Refer to the electrical circuit diagrams and check the DSC switch and circuits. Check and install a new DSC switch as required

		switch is deemed to be malfunctioning	
C1A77-16	Valve Relay Supply Circuit - Circuit voltage below threshold	■ Circuit voltage below threshold ■ Fuse ■ Harness /connector damaged	■ Refer to the electrical circuit diagrams and check the harness connection and fuse to the valve relay circuits
C1A90-12	Wheel Speed Sensor Supply - Circuit short to battery	■ Wheel speed sensor supply circuit short circuit to power	■ Refer to the electrical circuit diagrams and check the wheel speed sensor power supply line circuits between the sensors and the control module
C1A95-4A	Wheel Speed Sensor - Incorrect component installed	■ The incorrect wheel speed sensor has been installed	■ Check the correct wheel speed sensors are installed. Clear the DTC and retest
C1A95-64	Wheel Speed Sensor - Signal plausibility failure	■ Signal plausibility failure ■ Wheel speed sensor fault (any) ■ Sensor ring damaged, incorrect or defective ■ Harness fault	■ Check for correct wheel/tire sizes. Check the wheel speed sensors and circuits for damage. Remove the sensor and visually inspect the sensor ring on the constant velocity joint (CVJ) for missing or damaged teeth. If the sensor ring is damaged, renew the CVJ. Use an oscilloscope to examine the signals from all wheel speed sensors for abnormal high frequencies (modulation and peak signals). Renew sensors as necessary. After rectification, either clear the DTCs and cycle the ignition or cycle the ignition and drive the vehicle above 15kph for at least 30 seconds to ensure the lamps extinguish. When cycling the ignition, allow sufficient time for the 'P' symbol illumination to extinguish on the gear shifter (if installed) before returning the ignition state to on

		■ Incorrect wheel /tire assembly size	
C1A96-64	Brake Light Switch - Signal plausibility failure	■ Signal plausibility failure ■ Stop lamp switch fault ■ Harness /connector issue	■ Check the Stop lamp function. Ensure the brake lamp switch is correctly installed and configured. Refer to the electrical circuit diagrams and check the stop lamp switch circuit, rectify as necessary. Check the engine control module for DTCs. After rectification, either clear the DTCs and cycle the ignition or cycle the ignition and drive the vehicle above 15kph with at least one brake pedal press to ensure the lamps extinguish. When cycling the ignition, allow sufficient time for the 'P' symbol illumination to extinguish on the gear shifter (if installed) before returning the ignition state to on
C1A97-24	Lateral Accelerometer - Signal stuck high	■ Signal stuck high ■ Yaw rate/lateral acceleration sensor internal error	■ Renew the combined lateral acceleration/yaw rate sensor
C1A98-96	Yaw Rate Sensor - Component internal failure	■ Incorrect assembly ■ Sensor installation incorrect ■ Yaw rate/lateral acceleration sensor internal error	■ Check the combined lateral acceleration/yaw rate sensor installation and orientation. Check mounting, connector and fuse of the sensor. Clear the DTC and retest. If the problem persists, renew the combined lateral acceleration/yaw rate sensor
C1A98-	Yaw Rate		

2F	Sensor - Signal erratic	■ Yaw rate sensor signal fault for 2 minutes	■ Information only, regard as normal operation. Clear the DTC, cycle the ignition and retest. If the fault reoccurs, renew the combined lateral acceleration/yaw rate sensor. When cycling the ignition, allow sufficient time for the 'P' symbol illumination to extinguish on the gear shifter (if installed) before returning the ignition state to on
C1B00-29	Steering Angle Sensor - Signal invalid	■ Sensor signal invalid ■ Sensor installation incorrect ■ Steering angle sensor fault	■ Check steering angle sensor module for DTCs. Check the steering angle sensor installation and orientation. Clear the DTC and retest. If the problem persists, renew the sensor
C1B00-49	Steering Angle Sensor - Internal electronic failure	■ Sensor internal electronic failure	■ Check steering angle sensor module for DTCs. Renew the sensor
C1B00-64	Steering Angle Sensor - Signal plausibility failure	■ Sensor signal plausibility failure ■ Sensor installation incorrect ■ Steering angle sensor fault ■ Yaw rate sensor installation incorrect	■ Check steering angle sensor module for DTCs. Check the steering angle sensor installation and orientation. Check the yaw rate sensor installation and orientation. Clear the DTC and retest. If the problem persists, renew the steering angle sensor

C1B00-92	Steering Angle Sensor - Performance or incorrect operation	■ Sensor performance or incorrect operation ■ Sensor installation incorrect ■ Steering angle sensor fault	■ Check steering angle sensor module for DTCs. Check the steering angle sensor installation and orientation. Check the yaw rate sensor installation and orientation. Clear the DTC and retest. If the problem persists, renew the steering angle sensor
C1B02-16	Return Pump - Circuit voltage below threshold	■ Return pump circuit voltage below threshold ■ Harness damaged ■ Defective fuse	■ Refer to the electrical circuit diagrams and check the circuit, fuses and the connection to the ABS module. Rectify as necessary. After rectification, either clear the DTCs and cycle the ignition or cycle the ignition and drive the vehicle above 15kph to ensure the lamps extinguish. When cycling the ignition, allow sufficient time for the 'P' symbol illumination to extinguish on the gear shifter (if installed) before returning the ignition state to on
C1B02-49	Return Pump - Internal electronic failure	■ ABS control module internal electronic failure	■ Renew the ABS modulator. Refer to the warranty policy and procedures manual if a module is suspect
C1B22-24	Hill Descent Switch - Signal stuck high	■ Signal stuck high ■ If the HDC switch is pressed for longer than 1 minute, this DTC may be logged ■ Harness /connector issue	■ Check the switch operation. Refer to the electrical circuit diagrams and check the switch and circuit for short to power

C2009-64	Front Axle Wheel Speed Sensors Swapped - Signal plausibility failure	■ Sensor location swapped	■ Swap the front wheel speed sensor locations. Clear the DTC and retest. In order to clear the DTC/warning lamp after fault is rectified, the vehicle must be driven above 15km/h
C200A-64	Rear Axle Wheel Speed Sensors Swapped - Signal plausibility failure	■ Sensor location swapped	■ Swap the rear wheel speed sensor locations. Clear the DTC and retest. In order to clear the DTC/warning lamp after fault is rectified, the vehicle must be driven above 15km/h
U0001-88	High Speed CAN Communication Bus - Bus off	■ Bus off	■ Refer to the electrical circuit diagrams and check the power and ground connections to the module. Using the manufacturer approved diagnostic system, complete a CAN network integrity test. Refer to the electrical circuit diagrams and check the CAN network
U0074-88	Control Module Communication Bus "B" Off - Bus off	■ CAN Bus off	■ Refer to the electrical circuit diagrams and check the power and ground connections to the module. Using the manufacturer approved diagnostic system, complete a CAN network integrity test. Refer to the electrical circuit diagrams and check the CAN network
U0100-00	Lost Communication With ECM/PCM "A" - No sub type information	■ No sub type information	■ Refer to the electrical circuit diagrams and check the power and ground connections to the module. Using the manufacturer approved diagnostic system, complete a CAN network integrity test. Refer to the electrical circuit diagrams and check the CAN network between the engine control module and traction control module
U0101-	Lost		

00	Communication With TCM - No sub type information	■ No sub type information	■ Refer to the electrical circuit diagrams and check the power and ground connections to the module. Using the manufacturer approved diagnostic system, complete a CAN network integrity test. Refer to the electrical circuit diagrams and check the CAN network between the transmission control module and traction control module
U0102-00	Lost Communication With Transfer Case Control Module - No sub type information	■ No sub type information	■ Refer to the electrical circuit diagrams and check the power and ground connections to the module. Using the manufacturer approved diagnostic system, complete a CAN network integrity test. Refer to the electrical circuit diagrams and check the CAN network between the transfer case control module and traction control module
U0103-00	Lost Communication With Gear Shift Control Module A - No sub type information	■ No sub type information	■ Refer to the electrical circuit diagrams and check the power and ground connections to the module. Using the manufacturer approved diagnostic system, complete a CAN network integrity test. Refer to the electrical circuit diagrams and check the CAN network between the gear shift control module and traction control module
U0104-00	Lost Communication With Cruise Control Module - No sub type information	■ No sub type information	■ Refer to the electrical circuit diagrams and check the power and ground connections to the module. Using the manufacturer approved diagnostic system, complete a CAN network integrity test. Refer to the electrical circuit diagrams and check the CAN network between the cruise control module and traction control module
U0123-00	Lost Communication With Yaw Rate Sensor Module - No sub type information	■ No sub type information	■ Refer to the electrical circuit diagrams and check the power and ground connections to the module. Using the manufacturer approved diagnostic system, complete a CAN network integrity test. Refer to the electrical circuit diagrams and check the CAN network between the yaw rate sensor control module and traction control module

U0126-00	Lost Communication With Steering Angle Sensor Module - No sub type information	■ No sub type information	■ Refer to the electrical circuit diagrams and check the power and ground connections to the module. Using the manufacturer approved diagnostic system, complete a CAN network integrity test. Refer to the electrical circuit diagrams and check the CAN network between the steering angle sensor module and traction control module
U0128-00	Lost Communication With Park Brake Control Module - No sub type information	■ No sub type information	■ Refer to the electrical circuit diagrams and check the power and ground connections to the module. Using the manufacturer approved diagnostic system, complete a CAN network integrity test. Refer to the electrical circuit diagrams and check the CAN network between the park brake control module and traction control module
U0132-00	Lost Communication With Suspension Control Module "A" - No sub type information	■ No sub type information	■ Refer to the electrical circuit diagrams and check the power and ground connections to the module. Using the manufacturer approved diagnostic system, complete a CAN network integrity test. Refer to the electrical circuit diagrams and check the CAN network between the suspension control module and traction control module
U0133-00	Lost Communication With Active Roll Control Module - No sub type information	■ No sub type information	■ Refer to the electrical circuit diagrams and check the power and ground connections to the module. Using the manufacturer approved diagnostic system, complete a CAN network integrity test. Refer to the electrical circuit diagrams and check the CAN network between the active roll control module and traction control module
U0136-00	Lost Communication With Differential	■ No sub type information	■ Refer to the electrical circuit diagrams and check the power and ground connections to the module. Using the manufacturer approved diagnostic

	Control Module - Rear - No sub type information		system, complete a CAN network integrity test. Refer to the electrical circuit diagrams and check the CAN network between the differential control module and traction control module
U0138-00	Lost Communication With All Terrain Control Module - No sub type information	■ No sub type information	■ Refer to the electrical circuit diagrams and check the power and ground connections to the module. Using the manufacturer approved diagnostic system, complete a CAN network integrity test. Refer to the electrical circuit diagrams and check the CAN network between the all terrain control module and traction control module
U0140-00	Lost Communication With Body Control Module - No sub type information	■ No sub type information	■ Refer to the electrical circuit diagrams and check the power and ground connections to the module. Using the manufacturer approved diagnostic system, complete a CAN network integrity test. Refer to the electrical circuit diagrams and check the CAN network between the Central Junction Box and traction control module
U0300-00	Internal Control Module Software Incompatibility - No sub type information	■ Control module has been installed to the incorrect vehicle	■ Ensure the correct module is installed
U0401-68	Invalid Data Received from ECM/PCM A - Event information	■ Invalid data received	■ Check the engine control module for related DTCs and refer to the relevant DTC index
U0402-68	Invalid Data Received from TCM - Event information	■ Invalid data received	■ Check the transmission control module for related DTCs and refer to the relevant DTC index

U0403-68	Invalid Data Received From Transfer Case Control Module - Event information	■ Invalid data received	■ Check the transfer case control module for related DTCs and refer to the relevant DTC index
U0405-68	Invalid Data Received From Cruise Control Module - Event information	■ Invalid data received	■ Check the cruise control module for related DTCs and refer to the relevant DTC index
U0417-68	Invalid Data Received From Park Brake Control Module - Event information	■ Invalid data received	■ Check the park brake control module for related DTCs and refer to the relevant DTC index
U0421-68	Invalid Data Received from Suspension Control Module A - Event information	■ Invalid data received	■ Check the suspension control module for related DTCs and refer to the relevant DTC index
U0428-68	Invalid Data Received From Steering Angle Sensor Module - Event information	■ Invalid data received	■ Check the steering angle sensor control module for related DTCs and refer to the relevant DTC index
U0437-68	Invalid Data Received From Differential	■ Invalid data received	■ Check the differential control module for related DTCs and refer to the relevant DTC index

	Control Module-Rear - Event information		
U0439-68	Invalid Data Received From All Terrain Control Module - Event information	■ Invalid data received	■ Check the all terrain control module for related DTCs and refer to the relevant DTC index
U1A14-00	CAN Initialisation Failure - No sub type information	■ Incorrect control module installed to vehicle	■ Check that the correct ABS module has been installed. Refer to the electrical circuit diagrams and check the power and ground connections to the module. Using the manufacturer approved diagnostic system, complete a CAN network integrity test. Refer to the electrical circuit diagrams and check the CAN network
U2101-00	Control Module Configuration Incompatible - No sub type information	■ Car configuration file incorrectly configured ■ Vehicle variant code value not supported in this project ■ Variant code value not released in this project ■ Variant code value out of range	■ Configure the car configuration file using the manufacturers approved diagnostic system
U2101-	Control Module		

68	Configuration Incompatible - Event information	■ Vehicle variant code distributed via CAN is not matching the code stored in the Central Junction Box memory ■ ABS module has been installed from another vehicle (codes do not match expected) ■ New ABS module has been installed and at first use code did not match (becomes historic after first use)	■ Check that the correct ABS module has been installed. Configure the car configuration file using the manufacturers approved diagnostic system
U3000-00	Control Module - No sub type information	■ Incorrect control module installed to vehicle	■ Check that the correct ABS module has been installed. Refer to the electrical circuit diagrams and check the power and ground circuits to the component. Configure the module(s) using the manufacturers approved diagnostic system. Refer to the warranty policy and procedures manual if a module is suspect. Refer to the Network Communications section of the workshop manual
U3000-45	Control Module - Program memory failure	■ Program memory failure (software error)	■ Clear the DTC and retest. Repeat for several times. If the problem persists, renew the ABS control module. Refer to the warranty policy and procedures manual if a module is suspect

U3000-49	Control Module - Internal electronic failure	■ Internal electronic failure	■ Renew the ABS control module. Refer to the warranty policy and procedures manual if a module is suspect
U3000-4B	Control Module - Over temperature	■ Module over temperature has been detected ■ Excessive ABS interaction has been invoked, possibly by diagnostic equipment	■ Allow the unit to cool, clear the DTC and retest. If the problem persists, as a last resort renew the ABS control module. Consider environmental conditions before suspecting the module. Refer to the warranty policy and procedures manual if a module is suspect
U3000-53	Control Module - De-activated	■ Deactivated during software download to other modules on vehicle	■ This is not a fault. ECU temporarily deactivated following programming session. Please cycle the ignition to clear
U3000-68	Control Module - Event information	■ Stability assist operation is in progress and this has been continuing for an unfeasible length of time	■ Check for other related DTCs. Check the wheel speed sensors, combined yaw rate/lat Acc sensor and steering angle sensor
U3000-87	Control Module - Missing message	■ Car configuration file missing message	■ Configure the car configuration file using the manufacturers approved diagnostic system

U3002-81	Vehicle Identification Number - Invalid serial data received	■ Invalid vehicle identification number	■ Configure the car configuration file using the manufacturers approved diagnostic system
U3003-62	Battery Voltage - Signal compare failure	■ Signal compare failure	■ Check the battery condition and state of charge. Check the vehicle charging system. Refer to the relevant workshop manual section
U3006-16	Control Module Input Power "A" - Circuit voltage below threshold	■ ABS control module circuit voltage below threshold ■ Battery voltage low ■ Battery ground cable: high resistance ■ Battery connections loose /corroded ■ Battery current drain	■ Refer to the electrical circuit diagrams and check the module power and ground circuits. Check the battery condition and state of charge. Check the vehicle charging system. Refer to the relevant workshop manual section
U3006-17	Control Module Input Power "A" - Circuit voltage above threshold	■ ABS control module circuit voltage above threshold ■ Charging system fault	■ Check the battery condition and state of charge. Check the vehicle charging system. Refer to the relevant workshop manual section

U3006-1C	Control Module Input Power "A" - Circuit voltage out of range	■ ABS control module circuit voltage out of range, a momentary low voltage occurred	■ Check the battery condition and state of charge. Check the vehicle charging system. Check the connecter security to the module. Refer to the relevant workshop manual section

2012.0 RANGE ROVER (LM), 100-00

GENERAL INFORMATION

DESCRIPTION AND OPERATION

AUDIO AMPLIFIER MODULE (AAM)

CAUTION:

Diagnosis by substitution from a donor vehicle is **NOT** acceptable. Substitution of control modules does not guarantee confirmation of a fault, and may also cause additional faults in the vehicle being tested and/or the donor vehicle

NOTES:

- If the control module or a component is suspect and the vehicle remains under manufacturer warranty, refer to the warranty policy and procedures manual, or determine if any prior approval programme is in operation, prior to the installation of a new module/component
- Generic scan tools may not read the codes listed, or may read only 5-digit codes. Match the 5 digits from the scan tool to the first 5 digits of the 7-digit code listed to identify the fault (the last 2 digits give extra information read by the manufacturer-approved diagnostic system)
- When performing voltage or resistance tests, always use a digital multimeter accurate to three decimal places and with a current calibration certificate. When testing resistance, always take the resistance of the digital multimeter leads into account
- Check and rectify basic faults before beginning diagnostic routines involving pinpoint tests
- Inspect connectors for signs of water ingress, and pins for damage and/or corrosion
- If diagnostic trouble codes are recorded and, after performing the pinpoint tests, a fault is not present, an intermittent concern may be the cause. Always check for loose connections and corroded terminals
- Where an 'on demand self-test' is referred to, this can be accessed via the 'diagnostic trouble code monitor' tab on the manufacturers approved diagnostic system
- Check DDW for open campaigns. Refer to the corresponding bulletins and SSMs which may be valid for the specific customer complaint and carry out the recommendations as required

The table below lists all Diagnostic Trouble Codes (DTCs) that could be logged in the Audio Amplifier Module, for additional Diagnosis and Testing information refer to the relevant Diagnosis and Testing Section. For additional information, refer to: Information and Entertainment System (415-00 Information and Entertainment System - General Information, Diagnosis and Testing).

DTC	DESCRIPTION	POSSIBLE CAUSES	ACTION
B128A-11	Speaker #13 - Circuit short to ground	■ Wiring harness fault ■ Speaker fault ■ Audio amplifier internal fault	■ Refer to electrical circuit diagrams, check left co-axial surround speaker circuits for short to ground. Check speaker for short circuit, open circuit. If no harness or speaker fault suspect audio amplifier module. Refer to the Warranty Policy and Procedures manual if a module/component is suspect
B128A-12	Speaker #13 - Circuit short to battery	■ Wiring harness fault ■ Speaker fault ■ Audio amplifier internal fault	■ Refer to electrical circuit diagrams, check left co-axial surround speaker circuits for short to power. Check speaker for short circuit, open circuit. If no harness or speaker fault suspect audio amplifier module. Refer to the Warranty Policy and Procedures manual if a module/component is suspect
B128A-13	Speaker #13 - Circuit open	■ Wiring harness fault ■ Speaker fault ■ Audio amplifier internal fault	■ Refer to electrical circuit diagrams, check left co-axial surround speaker circuits for open circuit. Check speaker for short circuit, open circuit. If no harness or speaker fault suspect audio amplifier module. Refer to the Warranty Policy and Procedures manual if a module/component is suspect
B128A-1A	Speaker #13 - Circuit resistance	■ Wiring harness fault ■ Speaker fault	

	below threshold	■ Audio amplifier internal fault	■ Refer to electrical circuit diagrams, check left co-axial surround speaker circuits for short circuit. Check speaker for short circuit, open circuit. If no harness or speaker fault suspect audio amplifier module. Refer to the Warranty Policy and Procedures manual if a module/component is suspect
B128A-1E	Speaker #13 - Circuit resistance out of range	**NOTE:** Check that the correct speaker is installed to vehicle specification ■ Wiring harness fault ■ Speaker fault ■ Audio amplifier internal fault	■ Refer to electrical circuit diagrams, check left co-axial surround speaker circuits for open circuit, high resistance, or short circuit. Check speaker for short circuit, open circuit. If no harness or speaker fault suspect audio amplifier module. Refer to the Warranty Policy and Procedures manual if a module/component is suspect
B128B-11	Speaker #14 - Circuit short to ground	■ Wiring harness fault ■ Speaker fault ■ Audio amplifier internal fault	■ Refer to electrical circuit diagrams, check right co-axial surround speaker circuits for short to ground. Check speaker for short circuit, open circuit. If no harness or speaker fault suspect audio amplifier module. Refer to the Warranty Policy and Procedures manual if a module/component is suspect
B128B-12	Speaker #14 - Circuit short to	■ Wiring harness fault	

	battery	■ Speaker fault ■ Audio amplifier internal fault	■ Refer to electrical circuit diagrams, check right co-axial surround speaker circuits for short to power. Check speaker for short circuit, open circuit. If no harness or speaker fault suspect audio amplifier module. Refer to the Warranty Policy and Procedures manual if a module/component is suspect
B128B-13	Speaker #14 - Circuit open	■ Wiring harness fault ■ Speaker fault ■ Audio amplifier internal fault	■ Refer to electrical circuit diagrams, check right co-axial surround speaker circuits for open circuit. Check speaker for short circuit, open circuit. If no harness or speaker fault suspect audio amplifier module. Refer to the Warranty Policy and Procedures manual if a module/component is suspect
B128B-1A	Speaker #14 - Circuit resistance below threshold	■ Wiring harness fault ■ Speaker fault ■ Audio amplifier internal fault	■ Refer to electrical circuit diagrams, check right co-axial surround speaker circuits for short circuit. Check speaker for short circuit, open circuit. If no harness or speaker fault suspect audio amplifier module. Refer to the Warranty Policy and Procedures manual if a module/component is suspect
B128B-1E	Speaker #14 - Circuit resistance out of range	**NOTE:** Check that the correct speaker is installed to vehicle specification ■ Wiring harness fault	■ Refer to electrical circuit diagrams, check right co-axial surround speaker circuits for open circuit, high resistance, or short circuit. Check speaker for short circuit, open circuit. If no harness or speaker fault suspect audio amplifier module. Refer to the Warranty Policy and Procedures manual if a module/component is suspect

		■ Speaker fault ■ Audio amplifier internal fault	
B128C-11	Speaker #15 - Circuit short to ground	■ Wiring harness fault ■ Speaker fault ■ Audio amplifier internal fault	■ Refer to electrical circuit diagrams, check front centre speaker circuits for short to ground. Check speaker for short circuit, open circuit. If no harness or speaker fault suspect audio amplifier module. Refer to the Warranty Policy and Procedures manual if a module/component is suspect
B128C-12	Speaker #15 - Circuit short to battery	■ Wiring harness fault ■ Speaker fault ■ Audio amplifier internal fault	■ Refer to electrical circuit diagrams, check front centre speaker circuits for short to power. Check speaker for short circuit, open circuit. If no harness or speaker fault suspect audio amplifier module. Refer to the Warranty Policy and Procedures manual if a module/component is suspect
B128C-13	Speaker #15 - Circuit open	■ Wiring harness fault ■ Speaker fault ■ Audio amplifier internal fault	■ Refer to electrical circuit diagrams, check front centre speaker circuits for open circuit. Check speaker for short circuit, open circuit. If no harness or speaker fault suspect audio amplifier module. Refer to the Warranty Policy and Procedures manual if a module/component is suspect
B128C-1A	Speaker #15 - Circuit resistance below threshold	■ Wiring harness fault ■ Speaker fault ■ Audio amplifier internal fault	■ Refer to electrical circuit diagrams, check front centre speaker circuits for short circuit. Check speaker for short circuit, open circuit. If no harness or speaker fault suspect audio amplifier module. Refer to the Warranty Policy and Procedures manual if a module/component is suspect

B128C-1E	Speaker #15 - Circuit resistance out of range	**NOTE:** Check that the correct speaker is installed to vehicle specification ■ Wiring harness fault ■ Speaker fault ■ Audio amplifier internal fault	■ Refer to electrical circuit diagrams, check front centre speaker circuits for open circuit, high resistance, or short circuit. Check speaker for short circuit, open circuit. If no harness or speaker fault suspect audio amplifier module. Refer to the Warranty Policy and Procedures manual if a module/component is suspect
B1A01-11	Speaker #1 - Circuit short to ground	■ Wiring harness fault ■ Speaker fault ■ Audio amplifier internal fault	■ Refer to electrical circuit diagrams, check left front tweeter speaker circuits for short to ground. Check speaker for short circuit, open circuit. If no harness or speaker fault suspect audio amplifier module. Refer to the Warranty Policy and Procedures manual if a module/component is suspect
B1A01-12	Speaker #1 - Circuit short to battery	■ Wiring harness fault ■ Speaker fault ■ Audio amplifier internal fault	■ Refer to electrical circuit diagrams, check left front tweeter speaker circuits for short to power. Check speaker for short circuit, open circuit. If no harness or speaker fault suspect audio amplifier module. Refer to the Warranty Policy and Procedures manual if a module/component is suspect

B1A01-13	Speaker #1 - Circuit open	■ Wiring harness fault ■ Speaker fault ■ Audio amplifier internal fault	■ Refer to electrical circuit diagrams, check left front tweeter speaker circuits for open circuit. Check speaker for short circuit, open circuit. If no harness or speaker fault suspect audio amplifier module. Refer to the Warranty Policy and Procedures manual if a module/component is suspect
B1A01-1A	Speaker #1 - Circuit resistance below threshold	■ Wiring harness fault ■ Speaker fault ■ Audio amplifier internal fault	■ Refer to electrical circuit diagrams, check left front tweeter speaker circuits for short circuit. Check speaker for short circuit, open circuit. If no harness or speaker fault suspect audio amplifier module. Refer to the Warranty Policy and Procedures manual if a module/component is suspect
B1A01-1E	Speaker #1 - Circuit resistance out of range	■ Wiring harness fault ■ Speaker fault ■ Audio amplifier internal fault	■ Refer to electrical circuit diagrams, check left front tweeter speaker circuits for open circuit, high resistance, or short circuit. Check speaker for short circuit, open circuit. If no harness or speaker fault suspect audio amplifier module. Refer to the Warranty Policy and Procedures manual if a module /component is suspect
B1A02-11	Speaker #2 - Circuit short to ground	■ Wiring harness fault ■ Speaker fault ■ Audio amplifier internal fault	■ Refer to electrical circuit diagrams, check left front bass speaker circuits for short to ground. Check speaker for short circuit, open circuit. If no harness or speaker fault suspect audio amplifier module. Refer to the Warranty Policy and Procedures manual if a module/component is suspect
B1A02-12	Speaker #2 - Circuit short to battery	■ Wiring harness fault ■ Speaker fault	■ Refer to electrical circuit diagrams, check left front bass speaker circuits for short to power. Check speaker for short circuit, open circuit. If no harness or speaker fault suspect audio amplifier module. Refer to the Warranty Policy and Procedures manual if a module/component is suspect

		■ Audio amplifier internal fault	
B1A02-13	Speaker #2 - Circuit open	■ Wiring harness fault ■ Speaker fault ■ Audio amplifier internal fault	■ Refer to electrical circuit diagrams, check left front bass speaker circuits for open circuit. Check speaker for short circuit, open circuit. If no harness or speaker fault suspect audio amplifier module. Refer to the Warranty Policy and Procedures manual if a module/component is suspect
B1A02-1A	Speaker #2 - Circuit resistance below threshold	■ Wiring harness fault ■ Speaker fault ■ Audio amplifier internal fault	■ Refer to electrical circuit diagrams, check left front bass speaker circuits for short circuit. Check speaker for short circuit, open circuit. If no harness or speaker fault suspect audio amplifier module. Refer to the Warranty Policy and Procedures manual if a module/component is suspect
B1A02-1E	Speaker #2 - Circuit resistance out of range	■ Wiring harness fault ■ Speaker fault ■ Audio amplifier internal fault	■ Refer to electrical circuit diagrams, check left front bass speaker circuits for open circuit, high resistance, or short circuit. Check speaker for short circuit, open circuit. If no harness or speaker fault suspect audio amplifier module. Refer to the Warranty Policy and Procedures manual if a module/component is suspect
B1A03-11	Speaker #3 - Circuit short to ground	■ Wiring harness fault ■ Speaker fault ■ Audio amplifier internal fault	■ Refer to electrical circuit diagrams, check right front tweeter speaker circuits for short to ground. Check speaker for short circuit, open circuit. If no harness or speaker fault suspect audio amplifier module. Refer to the Warranty Policy and Procedures manual if a module/component is suspect

B1A03-12	Speaker #3 - Circuit short to battery	■ Wiring harness fault ■ Speaker fault ■ Audio amplifier internal fault	■ Refer to electrical circuit diagrams, check right front tweeter speaker circuits for short to power. Check speaker for short circuit, open circuit. If no harness or speaker fault suspect audio amplifier module. Refer to the Warranty Policy and Procedures manual if a module/component is suspect
B1A03-13	Speaker #3 - Circuit open	■ Wiring harness fault ■ Speaker fault ■ Audio amplifier internal fault	■ Refer to electrical circuit diagrams, check right front tweeter speaker circuits for open circuit. Check speaker for short circuit, open circuit. If no harness or speaker fault suspect audio amplifier module. Refer to the Warranty Policy and Procedures manual if a module/component is suspect
B1A03-1A	Speaker #3 - Circuit resistance below threshold	■ Wiring harness fault ■ Speaker fault ■ Audio amplifier internal fault	■ Refer to electrical circuit diagrams, check right front tweeter speaker circuits for short circuit. Check speaker for short circuit, open circuit. If no harness or speaker fault suspect audio amplifier module. Refer to the Warranty Policy and Procedures manual if a module/component is suspect
B1A03-1E	Speaker #3 - Circuit resistance out of range	■ Wiring harness fault ■ Speaker fault ■ Audio amplifier internal fault	■ Refer to electrical circuit diagrams, check right front tweeter speaker circuits for open circuit, high resistance, or short circuit. Check speaker for short circuit, open circuit. If no harness or speaker fault suspect audio amplifier module. Refer to the Warranty Policy and Procedures manual if a module /component is suspect
B1A04-11	Speaker #4 - Circuit short to ground	■ Wiring harness fault ■ Speaker fault	■ Refer to electrical circuit diagrams, check right front bass speaker circuits for short to ground. Check speaker for short circuit, open circuit. If no harness or speaker fault suspect audio amplifier module. Refer to the Warranty Policy and Procedures manual if a module/component is suspect

		▪ Audio amplifier internal fault	
B1A04-12	Speaker #4 - Circuit short to battery	▪ Wiring harness fault ▪ Speaker fault ▪ Audio amplifier internal fault	▪ Refer to electrical circuit diagrams, check right front bass speaker circuits for short to power. Check speaker for short circuit, open circuit. If no harness or speaker fault suspect audio amplifier module. Refer to the Warranty Policy and Procedures manual if a module/component is suspect
B1A04-13	Speaker #4 - Circuit open	▪ Wiring harness fault ▪ Speaker fault ▪ Audio amplifier internal fault	▪ Refer to electrical circuit diagrams, check right front bass speaker circuits for open circuit. Check speaker for short circuit, open circuit. If no harness or speaker fault suspect audio amplifier module. Refer to the Warranty Policy and Procedures manual if a module/component is suspect
B1A04-1A	Speaker #4 - Circuit resistance below threshold	▪ Wiring harness fault ▪ Speaker fault ▪ Audio amplifier internal fault	▪ Refer to electrical circuit diagrams, check right front bass speaker circuits for short circuit. Check speaker for short circuit, open circuit. If no harness or speaker fault suspect audio amplifier module. Refer to the Warranty Policy and Procedures manual if a module/component is suspect
B1A04-1E	Speaker #4 - Circuit resistance out of range	▪ Wiring harness fault ▪ Speaker fault ▪ Audio amplifier internal fault	▪ Refer to electrical circuit diagrams, check right front bass speaker circuits for open circuit, high resistance, or short circuit. Check speaker for short circuit, open circuit. If no harness or speaker fault suspect audio amplifier module. Refer to the Warranty Policy and Procedures manual if a module/component is suspect

B1A05-11	Speaker #5 - Circuit short to ground	■ Wiring harness fault ■ Speaker fault ■ Audio amplifier internal fault	■ Refer to electrical circuit diagrams, check left rear co-axial speaker circuits for short to ground. Check speaker for short circuit, open circuit. If no harness or speaker fault suspect audio amplifier module. Refer to the Warranty Policy and Procedures manual if a module/component is suspect
B1A05-12	Speaker #5 - Circuit short to battery	■ Wiring harness fault ■ Speaker fault ■ Audio amplifier internal fault	■ Refer to electrical circuit diagrams, check left rear co-axial speaker circuits for short to power. Check speaker for short circuit, open circuit. If no harness or speaker fault suspect audio amplifier module. Refer to the Warranty Policy and Procedures manual if a module/component is suspect
B1A05-13	Speaker #5 - Circuit open	■ Wiring harness fault ■ Speaker fault ■ Audio amplifier internal fault	■ Refer to electrical circuit diagrams, check left rear co-axial speaker circuits for open circuit. Check speaker for short circuit, open circuit. If no harness or speaker fault suspect audio amplifier module. Refer to the Warranty Policy and Procedures manual if a module/component is suspect
B1A05-1A	Speaker #5 - Circuit resistance below threshold	■ Wiring harness fault ■ Speaker fault ■ Audio amplifier internal fault	■ Refer to electrical circuit diagrams, check left rear co-axial speaker circuits for short circuit. Check speaker for short circuit, open circuit. If no harness or speaker fault suspect audio amplifier module. Refer to the Warranty Policy and Procedures manual if a module/component is suspect
B1A05-1E	Speaker #5 - Circuit resistance out of range	NOTE:	■ Refer to electrical circuit diagrams, check left rear co-axial speaker circuits for open circuit, high resistance, or short circuit. Check speaker for short

		Check that the correct speaker is installed to vehicle specification ■ Wiring harness fault ■ Speaker fault ■ Audio amplifier internal fault	circuit, open circuit. If no harness or speaker fault suspect audio amplifier module. Refer to the Warranty Policy and Procedures manual if a module /component is suspect
B1A06-11	Speaker #6 - Circuit short to ground	■ Wiring harness fault ■ Speaker fault ■ Audio amplifier internal fault	■ Refer to electrical circuit diagrams, check left rear bass speaker circuits for short to ground. Check speaker for short circuit, open circuit. If no harness or speaker fault suspect audio amplifier module. Refer to the Warranty Policy and Procedures manual if a module/component is suspect
B1A06-12	Speaker #6 - Circuit short to battery	■ Wiring harness fault ■ Speaker fault ■ Audio amplifier internal fault	■ Refer to electrical circuit diagrams, check left rear bass speaker circuits for short to power. Check speaker for short circuit, open circuit. If no harness or speaker fault suspect audio amplifier module. Refer to the Warranty Policy and Procedures manual if a module/component is suspect
B1A06-13	Speaker #6 - Circuit open	■ Wiring harness fault ■ Speaker fault	■ Refer to electrical circuit diagrams, check left rear bass speaker circuits for open circuit. Check speaker for short circuit, open circuit. If no harness or speaker fault suspect audio amplifier module. Refer to the Warranty Policy and Procedures manual if a module/component is suspect

		▪ Audio amplifier internal fault	
B1A06-1A	Speaker #6 - Circuit resistance below threshold	▪ Wiring harness fault ▪ Speaker fault ▪ Audio amplifier internal fault	▪ Refer to electrical circuit diagrams, check left rear bass speaker circuits for short circuit. Check speaker for short circuit, open circuit. If no harness or speaker fault suspect audio amplifier module. Refer to the Warranty Policy and Procedures manual if a module/component is suspect
B1A06-1E	Speaker #6 - Circuit resistance out of range	▪ Wiring harness fault ▪ Speaker fault ▪ Audio amplifier internal fault	▪ Refer to electrical circuit diagrams, check left rear bass speaker circuits for open circuit, high resistance, or short circuit. Check speaker for short circuit, open circuit. If no harness or speaker fault suspect audio amplifier module. Refer to the Warranty Policy and Procedures manual if a module/component is suspect
B1A07-11	Speaker #7 - Circuit short to ground	▪ Wiring harness fault ▪ Speaker fault ▪ Audio amplifier internal fault	▪ Refer to electrical circuit diagrams, check right rear co-axial speaker circuits for short to ground. Check speaker for short circuit, open circuit. If no harness or speaker fault suspect audio amplifier module. Refer to the Warranty Policy and Procedures manual if a module/component is suspect
B1A07-12	Speaker #7 - Circuit short to battery	▪ Wiring harness fault ▪ Speaker fault ▪ Audio amplifier internal fault	▪ Refer to electrical circuit diagrams, check right rear co-axial speaker circuits for short to power. Check speaker for short circuit, open circuit. If no harness or speaker fault suspect audio amplifier module. Refer to the Warranty Policy and Procedures manual if a module/component is suspect

B1A07-13	Speaker #7 - Circuit open	■ Wiring harness fault ■ Speaker fault ■ Audio amplifier internal fault	■ Refer to electrical circuit diagrams, check right rear co-axial speaker circuits for open circuit. Check speaker for short circuit, open circuit. If no harness or speaker fault suspect audio amplifier module. Refer to the Warranty Policy and Procedures manual if a module/component is suspect
B1A07-1A	Speaker #7 - Circuit resistance below threshold	■ Wiring harness fault ■ Speaker fault ■ Audio amplifier internal fault	■ Refer to electrical circuit diagrams, check right rear co-axial speaker circuits for short circuit. Check speaker for short circuit, open circuit. If no harness or speaker fault suspect audio amplifier module. Refer to the Warranty Policy and Procedures manual if a module/component is suspect
B1A07-1E	Speaker #7 - Circuit resistance out of range	**NOTE:** Check that the correct speaker is installed to vehicle specification ■ Wiring harness fault ■ Speaker fault ■ Audio amplifier internal fault	■ Refer to electrical circuit diagrams, check right rear co-axial speaker circuits for open circuit, high resistance, or short circuit. Check speaker for short circuit, open circuit. If no harness or speaker fault suspect audio amplifier module. Refer to the Warranty Policy and Procedures manual if a module /component is suspect
B1A08-	Speaker #8 -		

11	Circuit short to ground	■ Wiring harness fault ■ Speaker fault ■ Audio amplifier internal fault	■ Refer to electrical circuit diagrams, check right rear bass speaker circuits for short to ground. Check speaker for short circuit, open circuit. If no harness or speaker fault suspect audio amplifier module. Refer to the Warranty Policy and Procedures manual if a module/component is suspect
B1A08-12	Speaker #8 - Circuit short to battery	■ Wiring harness fault ■ Speaker fault ■ Audio amplifier internal fault	■ Refer to electrical circuit diagrams, check right rear bass speaker circuits for short to power. Check speaker for short circuit, open circuit. If no harness or speaker fault suspect audio amplifier module. Refer to the Warranty Policy and Procedures manual if a module/component is suspect
B1A08-13	Speaker #8 - Circuit open	■ Wiring harness fault ■ Speaker fault ■ Audio amplifier internal fault	■ Refer to electrical circuit diagrams, check right rear bass speaker circuits for open circuit. Check speaker for short circuit, open circuit. If no harness or speaker fault suspect audio amplifier module. Refer to the Warranty Policy and Procedures manual if a module/component is suspect
B1A08-1A	Speaker #8 - Circuit resistance below threshold	■ Wiring harness fault ■ Speaker fault ■ Audio amplifier internal fault	■ Refer to electrical circuit diagrams, check right rear bass speaker circuits for short circuit. Check speaker for short circuit, open circuit. If no harness or speaker fault suspect audio amplifier module. Refer to the Warranty Policy and Procedures manual if a module/component is suspect
B1A08-1E	Speaker #8 - Circuit resistance out of range	■ Wiring harness fault ■ Speaker fault	■ Refer to electrical circuit diagrams, check right rear bass speaker circuits for open circuit, high resistance, or short circuit. Check speaker for short circuit,

		▪ Audio amplifier internal fault	open circuit. If no harness or speaker fault suspect audio amplifier module. Refer to the Warranty Policy and Procedures manual if a module/component is suspect
B1A09-11	Speaker #9 - Circuit short to ground	▪ Wiring harness fault ▪ Speaker fault ▪ Audio amplifier internal fault	▪ Refer to electrical circuit diagrams, check left front mid range speaker circuits for short to ground. Check speaker for short circuit, open circuit. If no harness or speaker fault suspect audio amplifier module. Refer to the Warranty Policy and Procedures manual if a module/component is suspect
B1A09-12	Speaker #9 - Circuit short to battery	▪ Wiring harness fault ▪ Speaker fault ▪ Audio amplifier internal fault	▪ Refer to electrical circuit diagrams, check left front mid range speaker circuits for short to power. Check speaker for short circuit, open circuit. If no harness or speaker fault suspect audio amplifier module. Refer to the Warranty Policy and Procedures manual if a module/component is suspect
B1A09-13	Speaker #9 - Circuit open	▪ Wiring harness fault ▪ Speaker fault ▪ Audio amplifier internal fault	▪ Refer to electrical circuit diagrams, check left front mid range speaker circuits for open circuit. Check speaker for short circuit, open circuit. If no harness or speaker fault suspect audio amplifier module. Refer to the Warranty Policy and Procedures manual if a module/component is suspect
B1A09-1A	Speaker #9 - Circuit resistance below threshold	▪ Wiring harness fault ▪ Speaker fault ▪ Audio amplifier internal fault	▪ Refer to electrical circuit diagrams, check left front mid range speaker circuits for short circuit. Check speaker for short circuit, open circuit. If no harness or speaker fault suspect audio amplifier module. Refer to the Warranty Policy and Procedures manual if a module/component is suspect

B1A09-1E	Speaker #9 - Circuit resistance out of range	■ Wiring harness fault ■ Speaker fault ■ Audio amplifier internal fault	■ Refer to electrical circuit diagrams, check left front mid range speaker circuits for open circuit, high resistance, or short circuit. Check speaker for short circuit, open circuit. If no harness or speaker fault suspect audio amplifier module. Refer to the Warranty Policy and Procedures manual if a module /component is suspect
B1A10-11	Speaker #10 - Circuit short to ground	■ Wiring harness fault ■ Speaker fault ■ Audio amplifier internal fault	■ Refer to electrical circuit diagrams, check right front mid range speaker circuits for short to ground. Check speaker for short circuit, open circuit. If no harness or speaker fault suspect audio amplifier module. Refer to the Warranty Policy and Procedures manual if a module/component is suspect
B1A10-12	Speaker #10 - Circuit short to battery	■ Wiring harness fault ■ Speaker fault ■ Audio amplifier internal fault	■ Refer to electrical circuit diagrams, check right front mid range speaker circuits for short to power. Check speaker for short circuit, open circuit. If no harness or speaker fault suspect audio amplifier module. Refer to the Warranty Policy and Procedures manual if a module/component is suspect
B1A10-13	Speaker #10 - Circuit open	■ Wiring harness fault ■ Speaker fault ■ Audio amplifier internal fault	■ Refer to electrical circuit diagrams, check right front mid range speaker circuits for open circuit. Check speaker for short circuit, open circuit. If no harness or speaker fault suspect audio amplifier module. Refer to the Warranty Policy and Procedures manual if a module/component is suspect
B1A10-1A	Speaker #10 - Circuit	■ Wiring harness fault ■ Speaker fault	■ Refer to electrical circuit diagrams, check right front mid range speaker circuits for short circuit. Check speaker for short circuit, open circuit. If no harness or speaker fault suspect audio amplifier module. Refer to the Warranty Policy and Procedures manual if a module/component is suspect

	resistance below threshold	■ Audio amplifier internal fault	
B1A10-1E	Speaker #10 - Circuit resistance out of range	■ Wiring harness fault ■ Speaker fault ■ Audio amplifier internal fault	■ Refer to electrical circuit diagrams, check right front mid range speaker circuits for open circuit, high resistance, or short circuit. Check speaker for short circuit, open circuit. If no harness or speaker fault suspect audio amplifier module. Refer to the Warranty Policy and Procedures manual if a module/component is suspect
B1A11-11	Speaker #11 - Circuit short to ground	■ Wiring harness fault ■ Speaker fault ■ Audio amplifier internal fault	■ Refer to electrical circuit diagrams, check sub-woofer speaker circuits for short to ground. Check speaker for short circuit, open circuit. If no harness or speaker fault suspect audio amplifier module. Refer to the Warranty Policy and Procedures manual if a module/component is suspect
B1A11-12	Speaker #11 - Circuit short to battery	■ Wiring harness fault ■ Speaker fault ■ Audio amplifier internal fault	■ Refer to electrical circuit diagrams, check sub-woofer speaker circuits for short to power. Check speaker for short circuit, open circuit. If no harness or speaker fault suspect audio amplifier module. Refer to the Warranty Policy and Procedures manual if a module/component is suspect
B1A11-13	Speaker #11 - Circuit open	■ Wiring harness fault ■ Speaker fault ■ Audio amplifier internal fault	■ Refer to electrical circuit diagrams, check sub-woofer speaker circuits for open circuit. Check speaker for short circuit, open circuit. If no harness or speaker fault suspect audio amplifier module. Refer to the Warranty Policy and Procedures manual if a module/component is suspect

B1A11-1A	Speaker #11 - Circuit resistance below threshold	■ Wiring harness fault ■ Speaker fault ■ Audio amplifier internal fault	■ Refer to electrical circuit diagrams, check sub-woofer speaker circuits for short circuit. Check speaker for short circuit, open circuit. If no harness or speaker fault suspect audio amplifier module. Refer to the Warranty Policy and Procedures manual if a module/component is suspect
B1A11-1E	Speaker #11 - Circuit resistance out of range	■ Wiring harness fault ■ Speaker fault ■ Audio amplifier internal fault	■ Refer to electrical circuit diagrams, check sub-woofer speaker circuits for open circuit, high resistance, or short circuit. Check speaker for short circuit, open circuit. If no harness or speaker fault suspect audio amplifier module. Refer to the Warranty Policy and Procedures manual if a module/component is suspect
B1A12-11	Speaker #12 - Circuit short to ground	■ Wiring harness fault ■ Speaker fault ■ Audio amplifier internal fault	■ Refer to electrical circuit diagrams, check sub-woofer speaker circuits for short to ground. Check speaker for short circuit, open circuit. If no harness or speaker fault suspect audio amplifier module. Refer to the Warranty Policy and Procedures manual if a module/component is suspect
B1A12-12	Speaker #12 - Circuit short to battery	■ Wiring harness fault ■ Speaker fault ■ Audio amplifier internal fault	■ Refer to electrical circuit diagrams, check sub-woofer speaker circuits for short to power. Check speaker for short circuit, open circuit. If no harness or speaker fault suspect audio amplifier module. Refer to the Warranty Policy and Procedures manual if a module/component is suspect
B1A12-13	Speaker #12 - Circuit open	■ Wiring harness fault ■ Speaker fault	■ Refer to electrical circuit diagrams, check sub-woofer speaker circuits for open circuit. Check speaker for short circuit, open circuit. If no harness or speaker fault suspect audio amplifier module. Refer to the Warranty Policy and Procedures manual if a module/component is suspect

		▪ Audio amplifier internal fault	
B1A12-1A	Speaker #12 - Circuit resistance below threshold	▪ Wiring harness fault ▪ Speaker fault ▪ Audio amplifier internal fault	▪ Refer to electrical circuit diagrams, check sub-woofer speaker circuits for short circuit. Check speaker for short circuit, open circuit. If no harness or speaker fault suspect audio amplifier module. Refer to the Warranty Policy and Procedures manual if a module/component is suspect
B1A12-1E	Speaker #12 - Circuit resistance out of range	▪ Wiring harness fault ▪ Speaker fault ▪ Audio amplifier internal fault	▪ Refer to electrical circuit diagrams, check sub-woofer speaker circuits for open circuit, high resistance, or short circuit. Check speaker for short circuit, open circuit. If no harness or speaker fault suspect audio amplifier module. Refer to the Warranty Policy and Procedures manual if a module/component is suspect
U2300-56	Central Configuration - Invalid / incomplete configuration	▪ Vehicle configuration file error	▪ Check the vehicle is configured correctly using the manufacturer approved diagnostic system
U2300-64	Central Configuration - Signal plausibility failure	▪ Car Configuration File (CCF) error ▪ Substituted component ▪ New (blank) component	▪ Check the components fitted to the vehicle are correct (not substituted from another vehicle). Install the original or a new component as required. This DTC will occur once if a new module is installed. Cycle ignition ON/OFF and clear the DTC. Retest the system
U3000-55	Control Module - Not	▪ Audio unit not configured	▪ Where available, configure the module using the approved diagnostic system

	configured	▪ Can also be set by a harness fault ▪ Equalizer setting not equal to car information of integrated head unit	
U3000-96	Control Module - Component internal failure	▪ Audio amplifier internal fault	▪ Check power and ground supplies to the Audio Amplifier Module. If no fault found suspect internal fault within audio amplifier module. Clear DTCs and run Amplifier On Demand Self Test. Refer to the Warranty Policy and Procedures manual if a module/component is suspect
U3000-98	Control Module - Component or system over temperature	▪ Audio amplifier cooling vents obstructed ▪ Speaker circuit fault ▪ Internal electronic failure	▪ Check for possible causes of the amplifier overheating. Check that the amplifier module ventilation is not obstructed (rear left quarter of luggage compartment). Check for speaker circuit related DTCs. Check for internal electronic failure related DTCs. Refer to the Warranty Policy and Procedures manual if a module/component is suspect
U3003-16	Battery voltage - Circuit voltage below threshold	▪ Power distribution fault ▪ Wiring harness fault	▪ The power supply voltage to audio amplifier module is 2 volts below the voltage value broadcast on the MOST circuit. Refer to the electrical circuit diagrams and check the power and ground supply circuits to the audio amplifier module. Repair wiring as required, clear the DTC and retest the system
U3003-17	Battery voltage - Circuit	▪ Wiring harness fault	▪ The power supply voltage to audio amplifier module is 2 volts higher than the voltage value broadcast on the MOST circuit. Check power and ground circuits to audio system components. Check the Engine Control Module

	voltage above threshold	■ Vehicle charging system fault	(ECM) for charging related DTCs and refer to the relevant DTC index. Refer to the battery care manual and check the vehicle charging circuit performance. Rectify any charging circuit concerns and clear the DTC. Retest the system

2012.0 RANGE ROVER (LM), 100-00

GENERAL INFORMATION

DESCRIPTION AND OPERATION

AUDIO FRONT CONTROL MODULE (ACM)

CAUTION:

Diagnosis by substitution from a donor vehicle is **NOT** acceptable. Substitution of control modules does not guarantee confirmation of a fault, and may also cause additional faults in the vehicle being tested and/or the donor vehicle

NOTES:

- If the control module or a component is suspect and the vehicle remains under manufacturer warranty, refer to the warranty policy and procedures manual, or determine if any prior approval programme is in operation, prior to the installation of a new module/component
- Generic scan tools may not read the codes listed, or may read only 5-digit codes. Match the 5 digits from the scan tool to the first 5 digits of the 7-digit code listed to identify the fault (the last 2 digits give extra information read by the manufacturer-approved diagnostic system)
- When performing voltage or resistance tests, always use a digital multimeter accurate to three decimal places and with a current calibration certificate. When testing resistance, always take the resistance of the digital multimeter leads into account
- Check and rectify basic faults before beginning diagnostic routines involving pinpoint tests
- Inspect connectors for signs of water ingress, and pins for damage and/or corrosion
- If diagnostic trouble codes are recorded and, after performing the pinpoint tests, a fault is not present, an intermittent concern may be the cause. Always check for loose connections and corroded terminals
- Where an 'on demand self-test' is referred to, this can be accessed via the 'diagnostic trouble code monitor' tab on the manufacturers approved diagnostic system
- Check DDW for open campaigns. Refer to the corresponding bulletins and SSMs which may be valid for the specific customer complaint and carry out the recommendations as required

The table below lists all Diagnostic Trouble Codes (DTCs) that could be logged in the Audio Front Control module, for additional Diagnosis and Testing information refer to the relevant Diagnosis and Testing Section. For additional information, refer to: Information and Entertainment System (415-00 Information and Entertainment System - General Information, Diagnosis and Testing).

DTC	DESCRIPTION	POSSIBLE CAUSES	ACTION
B1A56-01	Antenna - General electrical failure	■ Antenna connection broken ■ Antenna failure	■ Check antenna connection wiring for integrity ■ Check antenna for signs of damage. Repair wiring or replace antenna as required. Refer to the Warranty Policy and Procedures manual, or determine if any prior approval programme is in operation, prior to the installation of a new module/component
B1D79-01	Microphone Input - General electrical failure	■ Microphone circuit open circuit, short circuit to ground, short circuit to power ■ Microphone configuration mismatched with Car Configuration File (CCF)	■ Refer to the electrical circuit diagrams and check the microphone input circuit for open circuit, short circuit to ground, short circuit to power ■ Using the manufacturer approved diagnostic system check and up-date the Car Configuration File (CCF) as required. Clear the DTC and re-test
U0010-88	Medium Speed CAN Communication Bus - Bus off	■ Power or ground supply to the Audio Control Module (ACM) fault	■ Refer to the electrical circuit diagrams and check the power and ground connections to the module

		■ Medium speed CAN network circuit, short to ground, high resistance, open circuit	■ Using the manufacturer approved diagnostic system, complete a CAN network integrity test. Refer to the electrical circuit diagrams and check the CAN network. Refer to the Network Communications section of the workshop manual
U0140-00	Lost communication with Body Control Module - No sub type information	■ CAN communication error ■ Incorrect component installed	■ Check for other modules reporting CAN bus off or lost communication faults. Check CAN wiring. Using the manufacturer approved diagnostic system, complete a CAN integrity test. Refer to the electrical circuit diagrams and check the module CAN, power and ground circuits. Refer to the Network Communications section of the workshop manual ■ Check that correct component is installed. Using the manufacturer approved diagnostic system check and up-date the Car Configuration File (CCF) as required. Clear the DTC and re-test
U0155-00	Lost communication with Instrument Panel Cluster (IPC) - No sub type information	■ CAN communication error ■ Incorrect component installed	■ Check for other modules reporting CAN bus off or lost communication faults. Check CAN wiring. Using the manufacturer approved diagnostic system, complete a CAN integrity test. Refer to the electrical circuit diagrams and check the module CAN, power and ground circuits. Refer to the Network Communications section of the workshop manual ■ Check that correct component is installed. Using the manufacturer approved diagnostic system check and up-date the Car Configuration File (CCF) as required. Clear the DTC and re-test
U0156-00	Lost communication with Information Centre "A" - No sub type information	■ CAN communication error ■ Incorrect component installed	■ Check for other modules reporting CAN bus off or lost communication faults. Check CAN wiring. Using the manufacturer approved diagnostic system, complete a CAN integrity test. Refer to the electrical circuit diagrams and check the module CAN, power and ground circuits. Refer to the Network Communications section of the workshop manual

			■ Check that correct component is installed. Using the manufacturer approved diagnostic system check and up-date the Car Configuration File (CCF) as required. Clear the DTC and re-test
U0164-00	Lost communication with HVAC Control Module - No sub type information	■ CAN communication error ■ Incorrect component installed	■ Check for other modules reporting CAN bus off or lost communication faults. Check CAN wiring. Using the manufacturer approved diagnostic system, complete a CAN integrity test. Refer to the electrical circuit diagrams and check the module CAN, power and ground circuits. Refer to the Network Communications section of the workshop manual ■ Check that correct component is installed. Using the manufacturer approved diagnostic system check and up-date the Car Configuration File (CCF) as required. Clear the DTC and re-test
U0186-00	Lost communication with Audio amplifier "A" - No sub type information	■ CAN communication error ■ Incorrect component installed	■ Check for other modules reporting CAN bus off or lost communication faults. Check CAN wiring. Using the manufacturer approved diagnostic system, complete a CAN integrity test. . Refer to the electrical circuit diagrams and check the module CAN, power and ground circuits. Refer to the Network Communications section of the workshop manual ■ Check that correct component is installed. Using the manufacturer approved diagnostic system check and up-date the Car Configuration File (CCF) as required. Clear the DTC and re-test
U0187-4A	Lost Communication With Digital Disc Player /Changer Module "A" - Incorrect component installed	■ Incorrect component installed ■ The security of the MOST network prevents the unauthorized	■ Using the approved manufacturer diagnostic system configure the network to accept the module

		addition of a module to the system	
U0191-00	Lost communication with Television - No sub type information	■ CAN communication error ■ Incorrect component installed	■ Check for other modules reporting CAN bus off or lost communication faults. Check CAN wiring. Using the manufacturer approved diagnostic system, complete a CAN integrity test. Refer to the electrical circuit diagrams and check the module CAN, power and ground circuits. Refer to the Network Communications section of the workshop manual ■ Check that correct component is installed. Using the manufacturer approved diagnostic system check and up-date the Car Configuration File (CCF) as required. Clear the DTC and re-test
U0193-00	Lost communication with Digital Audio Control Module "A" - No sub type information	■ CAN communication error ■ Incorrect component installed	■ Check for other modules reporting CAN bus off or lost communication faults. Check CAN wiring. Using the manufacturer approved diagnostic system, complete a CAN integrity test. Refer to the electrical circuit diagrams and check the module CAN, power and ground circuits. Refer to the Network Communications section of the workshop manual ■ Check that correct component is installed. Using the manufacturer approved diagnostic system check and up-date the Car Configuration File (CCF) as required. Clear the DTC and re-test
U0194-00	Lost communication with Digital Audio Control Module "B" - No sub type information	■ CAN communication error ■ Incorrect component installed	■ Check for other modules reporting CAN bus off or lost communication faults. Check CAN wiring. Using the manufacturer approved diagnostic system, complete a CAN integrity test. Refer to the electrical circuit diagrams and check the module CAN, power and ground circuits. Refer to the Network Communications section of the workshop manual ■ Check that correct component is installed. Using the manufacturer approved diagnostic system check and up-date the Car Configuration File (CCF) as required. Clear the DTC and re-test

U0196-00	Lost communication with Entertainment Control Module Rear "A" - No sub type information	■ CAN communication error ■ Incorrect component installed	■ Check for other modules reporting CAN bus off or lost communication faults. Check CAN wiring. Using the manufacturer approved diagnostic system, complete a CAN integrity test. Refer to the electrical circuit diagrams and check the module CAN, power and ground circuits. Refer to the Network Communications section of the workshop manual ■ Check that correct component is installed. Using the manufacturer approved diagnostic system check and up-date the Car Configuration File (CCF) as required. Clear the DTC and re-test
U0197-00	Lost communication with Telephone Control Module - No sub type information	■ CAN communication error ■ Incorrect component installed	■ Check for other modules reporting CAN bus off or lost communication faults. Check CAN wiring. Using the manufacturer approved diagnostic system, complete a CAN integrity test. Refer to the electrical circuit diagrams and check the module CAN, power and ground circuits. Refer to the Network Communications section of the workshop manual ■ Check that correct component is installed. Using the manufacturer approved diagnostic system check and up-date the Car Configuration File (CCF) as required. Clear the DTC and re-test
U0237-00	Lost communication with Digital Audio Control Module "C" - No sub type information	■ CAN communication error ■ Incorrect component installed	■ Check for other modules reporting CAN bus off or lost communication faults. Check CAN wiring. Using the manufacturer approved diagnostic system, complete a CAN integrity test. Refer to the electrical circuit diagrams and check the module CAN, power and ground circuits. Refer to the Network Communications section of the workshop manual ■ Check that correct component is installed. Using the manufacturer approved diagnostic system check and up-date the Car Configuration File (CCF) as required. Clear the DTC and re-test
U0253-00	Lost Communication With Accessory Protocol Interface	■ CAN communication error	■ Check for other modules reporting CAN bus off or lost communication faults. Check CAN wiring. Using the manufacturer approved diagnostic system, complete a CAN integrity test. Refer to the electrical circuit diagrams and check the module CAN, power and ground circuits. Refer to the Network Communications section of the workshop manual

	Module - No sub type information	■ Incorrect component installed	■ Check that correct component is installed. Using the manufacturer approved diagnostic system check and up-date the Car Configuration File (CCF) as required. Clear the DTC and re-test
U0264-00	Lost communication with Camera Module - Rear - No sub type information	■ CAN communication error ■ Incorrect component installed	■ Check for other modules reporting CAN bus off or lost communication faults. Check CAN wiring. Using the manufacturer approved diagnostic system, complete a CAN integrity test. Refer to the electrical circuit diagrams and check the module CAN, power and ground circuits. Refer to the Network Communications section of the workshop manual ■ Check that correct component is installed. Using the manufacturer approved diagnostic system check and up-date the Car Configuration File (CCF) as required. Clear the DTC and re-test
U0300-00	Software Incompatibility - No sub type information	■ Master configuration ID is incorrect	■ Using the manufacturer approved diagnostic system re-configure the Front Audio Control Module (ACM)
U0300-48	Software Incompatibility - Supervision software failure	■ Supervision software failure	■ Using the manufacturer approved diagnostic system re-configure the Front Audio Control Module (ACM)
U0417-00	Invalid Data Received From Park Brake Control Module - No sub type information	■ Invalid data received from Park Brake Module (PBM)	■ Check for related DTCs. Refer to the relevant DTC index. Using the manufacturer approved diagnostic system check and up-date the Car Configuration File (CCF) as required. Clear the DTC and re-test
U0422-00	Invalid Data Received From Body Control Module - No	■ Invalid data received from Central Junction Box (CJB)	■ Check for related DTCs. Refer to the relevant DTC index. Using the manufacturer approved diagnostic system check and up-date the Car Configuration File (CCF) as required. Clear the DTC and re-test

	sub type information		
U0424-00	Invalid Data Received From HVAC Control Module - no sub type information	■ Invalid data received from Heating Ventilation Air Conditioning (HVAC) module	■ Check for related DTCs. Refer to the relevant DTC index. Using the manufacturer approved diagnostic system check and up-date the Car Configuration File (CCF) as required. Clear the DTC and re-test
U1A14-48	CAN Initialization Failure - Supervision software failure	■ Audio control module supervision software failure	■ Refer to the electrical circuit diagrams and check the power and ground connections to the module. Using the manufacturer approved diagnostic system, complete a CAN network integrity test. Refer to the electrical circuit diagrams and check the CAN network
U1A14-49	CAN Initialization Failure - Internal electronic failure	■ CAN communication error ■ Front Audio Control Module (ACM) internal failure	■ Refer to the electrical circuit diagrams and check the power and ground connections to the module. Using the manufacturer approved diagnostic system, complete a CAN network integrity test. Refer to the electrical circuit diagrams and check the CAN network ■ Check and install a new Front Audio Control Module (ACM) as required. Refer to the Warranty Policy and Procedures manual, or determine if any prior approval programme is in operation, prior to the installation of a new module/component
U2003-31	Fibre Optic Communication Bus - No signal	■ Media Orientated System Transport (MOST) ring break - No data received	■ Carry out the general Media Orientated System Transport (MOST) test. Refer to the Network Communications section of the workshop manual

U2003-88	Fibre Optic Communication Bus - Bus off	■ Media Orientated System Transport (MOST) bus off	■ Carry out the general Media Orientated System Transport (MOST) test. Refer to the Network Communications section of the workshop manual
U3000-55	Control Module - Not configured	■ Audio Control Module (ACM) not configured ■ Audio Control Module (ACM) circuit short to ground, short to power, open circuit, high resistance ■ EQ setting not equal to car information of integrated head unit	■ Using the manufacturer approved diagnostic system re-configure the Audio Control Module (ACM). Clear the DTC and retest. ■ Refer to the electrical circuit diagrams and check Audio Control Module (ACM) circuit for short to ground, short to power, open circuit, high resistance ■ Adjust the EQ setting as required
U3000-68	Control Module - Event information	■ Audio Control Module (ACM) event information - Media Orientated System Transport (MOST) transceiver overheating	■ Refer to the electrical circuit diagrams and check the power and ground circuits to the component. Check the Media Orientated System Transport (MOST) circuit. Carry out the general Media Orientated System Transport (MOST) test. Refer to the Network Communications section of the workshop manual and in the approved diagnostic system. Clear the DTC and retest. Refer to the Warranty Policy and Procedures manual, or determine if any prior approval programme is in operation, prior to the installation of a new module/component



2012.0 RANGE ROVER (LM), 100-00

GENERAL INFORMATION

DESCRIPTION AND OPERATION

BLIND SPOT MONITORING SYSTEM MODULE LEFT/RIGHT (SODL/R)

CAUTION:

Diagnosis by substitution from a donor vehicle is **NOT** acceptable. Substitution of control modules does not guarantee confirmation of a fault, and may also cause additional faults in the vehicle being tested and/or the donor vehicle

NOTES:

- If the control module or a component is suspect and the vehicle remains under manufacturer warranty, refer to the warranty policy and procedures manual, or determine if any prior approval programme is in operation, prior to the installation of a new module/component
- Generic scan tools may not read the codes listed, or may read only 5-digit codes. Match the 5 digits from the scan tool to the first 5 digits of the 7-digit code listed to identify the fault (the last 2 digits give extra information read by the manufacturer-approved diagnostic system)
- When performing voltage or resistance tests, always use a digital multimeter accurate to three decimal places and with a current calibration certificate. When testing resistance, always take the resistance of the digital multimeter leads into account
- Check and rectify basic faults before beginning diagnostic routines involving pinpoint tests
- Inspect connectors for signs of water ingress, and pins for damage and/or corrosion
- If diagnostic trouble codes are recorded and, after performing the pinpoint tests, a fault is not present, an intermittent concern may be the cause. Always check for loose connections and corroded terminals
- Where an 'on demand self-test' is referred to, this can be accessed via the 'diagnostic trouble code monitor' tab on the manufacturers approved diagnostic system
- Check DDW for open campaigns. Refer to the corresponding bulletins and SSMs which may be valid for the specific customer complaint and carry out the recommendations as required

The table below lists all Diagnostic Trouble Codes (DTCs) that could be logged in the Blind Spot Monitoring System Module Left/Right, for additional Diagnosis and Testing information refer to the relevant Diagnosis and Testing Section. For additional information, refer to: Warning Devices (413-09 Warning Devices, Diagnosis and Testing).

DTC	DESCRIPTION	POSSIBLE CAUSES	ACTION
B11C9-11	Driver Display Status LED - Circuit short to ground	■ Circuit short to ground	■ Refer to the electrical circuit diagrams and check driver display status LED circuit for short to ground
B11C9-15	Driver Display Status LED - Circuit short to battery or open	■ Circuit short to power or open circuit	■ Refer to the electrical circuit diagrams and check driver display status LED circuit for short to ground
B11D6-11	Driver Display Alert LED - Circuit short to ground	■ Circuit short to ground	■ Refer to the electrical circuit diagrams and check driver display status LED circuit for short to ground
B11D6-15	Driver Display Alert LED - Circuit short to battery or open	■ Circuit short to power or open circuit	■ Refer to the electrical circuit diagrams and check driver display status LED circuit for short to ground
U0010-00	Medium Speed CAN Communication Bus - No sub type information	■ No sub type information	■ Refer to the electrical circuit diagrams and check the power and ground connections to the module. Using the manufacturer approved diagnostic system, complete a CAN network integrity test. Refer to the electrical circuit diagrams and check the CAN network
U0140-	Lost		

00	Communication With Body Control Module - No sub type information	■ No sub type information	■ Refer to the electrical circuit diagrams and check the power and ground connections to the module. Using the manufacturer approved diagnostic system, complete a CAN network integrity test. Refer to the electrical circuit diagrams and check the CAN network between the Central Junction Box and Blind Spot Monitoring System Module
U0155-00	Lost Communication With Instrument Panel Cluster (IPC) Control Module - No sub type information	■ No sub type information	■ Refer to the electrical circuit diagrams and check the power and ground connections to the module. Using the manufacturer approved diagnostic system, complete a CAN network integrity test. Refer to the electrical circuit diagrams and check the CAN network between the Instrument Cluster and Blind Spot Monitoring System Module
U0232-00	Lost Communication With Blind Spot Monitoring System Module - Left - No sub type information	■ CAN bus circuit fault ■ Harness fault between left side mirror and left side module	■ Refer to the electrical circuit diagrams and check the power and ground connections to the module. Using the manufacturer approved diagnostic system, complete a CAN network integrity test. Refer to the electrical circuit diagrams and check the CAN network between the left Blind Spot Monitoring System Module and the right Blind Spot Monitoring System Module ■ Refer to the electrical circuit diagrams and check the left side harness between the left side mirror and left hand module
U0233-00	Lost Communication With Blind Spot Monitoring System Module - Right - No sub type information	■ CAN bus circuit fault ■ Harness fault between right side mirror and right side module	■ Refer to the electrical circuit diagrams and check the power and ground connections to the module. Using the manufacturer approved diagnostic system, complete a CAN network integrity test. Refer to the electrical circuit diagrams and check the CAN network between the left Blind Spot Monitoring System Module and the right Blind Spot Monitoring System Module ■ Refer to the electrical circuit diagrams and check the right side harness between the right side mirror and right hand module

U0300-00	Internal Control Module Software Incompatibility - No sub type information	■ No sub type information	■ Check Central Junction Box for related DTCs and refer to the relevant DTC Index. Check Restraints Control Module for related DTCs and refer to DTC Index. Check correct components are installed and that the latest software version is installed
U0422-68	Invalid Data Received From Body Control Module - Event information	■ Event information	■ Check the Central Junction Box for related DTCs and refer to the relevant DTC index
U2100-00	Initial Configuration Not Complete - No sub type information	■ Car Configuration File information not received completely	■ Check/amend Car Configuration File using manufacturer approved diagnostic system
U2101-00	Control Module Configuration Incompatible - No sub type information	■ Car Configuration File information incompatible to Control module	■ Check/amend Car Configuration File using manufacturer approved diagnostic system
U3000-44	Control Module - Data memory failure	■ Control module data memory failure	■ Refer to the electrical circuit diagrams and check the power and ground circuits to the component. Refer to the warranty policy and procedures manual if a module is suspect
U3000-47	Control Module - Watchdog /safety	■ Control module internal watchdog/safety	■ Refer to the electrical circuit diagrams and check the power and ground circuits to the component. Refer to the warranty policy and procedures manual if a module is suspect

	microcontroller failure	MicroController failure	
U3000-49	Control Module - Internal electronic failure	■ Control module internal electronic failure (internal error)	■ Clear DTC, cycle ignition and retest. If fault persists, refer to the electrical circuit diagrams and check the power and ground circuits to the component. Repair as required, clear DTC and retest. If fault persists, check and install a new blind spot monitoring system module as required. Refer to the warranty policy and procedures manual, or determine if any prior approval programme is in operation, prior to the installation of a new module/component
U3003-62	Battery Voltage - Signal compare failure	■ Mis-match in battery voltage, between Central Junction Box and Blind Spot Monitoring System module, of 2 volts or more	■ Check the module connector for security and integrity. Refer to the electrical circuit diagrams and check the Control module supply voltage. Check vehicle battery voltage and state of charge. Check the power signal line to the module

2012.0 RANGE ROVER (LM), 100-00

GENERAL INFORMATION

DESCRIPTION AND OPERATION

CENTRAL JUNCTION BOX (CJB)

CAUTION:

Diagnosis by substitution from a donor vehicle is **NOT** acceptable. Substitution of control modules does not guarantee confirmation of a fault, and may also cause additional faults in the vehicle being tested and/or the donor vehicle.

NOTES:

- If a control module or a component is suspect and the vehicle remains under manufacturer warranty, refer to the Warranty Policy and Procedures manual, or determine if any prior approval programme is in operation, prior to the installation of a new module/component.
- Generic scan tools may not read the codes listed, or may read only 5-digit codes. Match the 5 digits from the scan tool to the first 5 digits of the 7-digit code listed to identify the fault (the last 2 digits give extra information read by the manufacturer-approved diagnostic system).
- When performing voltage or resistance tests, always use a digital multimeter accurate to three decimal places, and with an up-to-date calibration certificate. When testing resistance always take the resistance of the digital multimeter leads into account.
- Check and rectify basic faults before beginning diagnostic routines involving pinpoint tests.
- Inspect connectors for signs of water ingress, and pins for damage and/or corrosion.
- If DTCs are recorded and, after performing the pinpoint tests, a fault is not present, an intermittent concern may be the cause. Always check for loose connections and corroded terminals.
- Check DDW for open campaigns. Refer to the corresponding bulletins and SSMs which may be valid for the specific customer complaint and carry out the recommendations as required.

The table below lists all Diagnostic Trouble Codes (DTCs) that could be logged in the Central Junction Box (CJB). For additional diagnosis and testing information, refer to the relevant Diagnosis and Testing section in the workshop manual.For additional information, refer to: Communications Network (418-00 Module Communications Network, Diagnosis and Testing).

DTC	DESCRIPTION	POSSIBLE CAUSES	ACTION
B1009-51	Ignition Authorization - Not programmed	■ Not programmed	■ Configure the module using the manufacturers approved diagnostic system
B1009-62	Ignition Authorization - Signal compare failure	NOTE: This DTC is only likely to occur following component replacement applications failing prior to completion ■ Encrypted data exchange between instrument cluster and the central junction box does not match	■ Configure the module using the manufacturers approved diagnostic system. If problem persists, carry out CAN network integrity test and module self test using manufacturer approved diagnostic system. Alternatively, refer to the electrical circuit diagrams and check CAN circuit
B1009-63	Ignition Authorization - Circuit /component protection time-out	■ Circuit/component protection time-out ■ CAN circuit fault ■ Instrument cluster fault ■ Central junction box fault ■ Battery voltage too low	NOTE: Only diagnose this DTC if the customer is reporting a start related issue ■ Clear the DTC and retest. Check for additional ignition related DTCs and rectify as necessary. If problem persists, carry out CAN network

			integrity test and on demand self test using manufacturer approved diagnostic system. Alternatively, refer to the electrical circuit diagrams and check CAN circuits
B1009-81	Ignition Authorization - Invalid serial data received	■ Invalid serial data received ■ CAN circuit fault ■ Instrument cluster fault	■ Check for instrument cluster related DTCs. Configure the module using the manufacturer approved diagnostic system
B100D-51	Column Lock Authorization - Not programmed	■ Module not programmed	■ Configure the electric steering column lock control module using the manufacturers approved diagnostic system
B100D-64	Column Lock Authorization - Signal plausibility failure	■ Signal plausibility failure ■ Steering column lock unable to perform lock action ■ CAN network fault ■ Anti-lock braking system, engine control module, central junction box fault	**NOTE:** Prior to clearing this DTC, carry out the Vehicle Functional Reset application using the manufacturer approved diagnostic system ■ Check the serviceability of the steering column and lock. Clear the DTC and retest. If problem persists, carry out CAN network integrity test and on demand self test using manufacturer approved diagnostic system. Alternatively, refer to the electrical circuit diagrams and check CAN circuits
B100D-67	Column Lock Authorization - Signal incorrect after event	■ Signal incorrect after event ■ Instrument cluster fault ■ CAN network fault	■ Check for additional related DTCs. Clear the DTC and retest. If problem persists, carry out CAN network integrity test and on demand self test using manufacturer approved diagnostic system. Alternatively, refer to the electrical circuit diagrams and check CAN circuits

B100D-81	Column Lock Authorization - Invalid serial data received	**NOTE:** This DTC is only likely to occur following component replacement applications failing prior to completion ■ Encrypted data exchange between steering column lock and the central junction box does not match	**NOTE:** Prior to clearing this DTC, carry out the Vehicle Functional Reset application using the manufacturer approved diagnostic system ■ Configure the module using the manufacturers approved diagnostic system. If problem persists, carry out CAN network integrity test and module self test using manufacturer approved diagnostic system. Alternatively, refer to the electrical circuit diagrams and check CAN circuit
B100D-87	Column Lock Authorization - Missing message	■ Missing message ■ Battery voltage too low ■ CAN network fault ■ No response from electric steering column lock control module, instrument cluster, central junction box ■ Electric steering column lock control	■ Check for additional related DTCs. Clear the DTC and retest. If problem persists, carry out CAN network integrity test and module self test using manufacturer approved diagnostic system. Alternatively, refer to the electrical circuit diagrams and check CAN circuit

		module, instrument cluster, central junction box fault	
B100D-96	Column Lock Authorization - Component internal failure	■ Component internal failure ■ Battery voltage too low ■ Torque load on steering column	**NOTE:** Prior to clearing this DTC, carry out the Vehicle Functional Reset application using the manufacturer approved diagnostic system ■ Clear the DTC and retest. Check steering is not under high side load. Refer to the electrical circuit diagrams and check steering column lock circuits. Carry out CAN network integrity test and module self test using manufacturer approved diagnostic system. If the problem persists, renew the electric steering column lock control module
B1024-83	Start Control Unit - Value of signal protection calculation incorrect	■ Value of signal protection calculation incorrect ■ Start control unit fault ■ LIN network fault	■ Clear the DTC and retest. Refer to the electrical circuit diagrams and check start control unit circuits. If the problem persists, renew the start control unit
B1024-87	Start Control Unit - Missing message	■ Missing message ■ Start control unit fault ■ LIN network fault	■ Clear the DTC and retest. Refer to the electrical circuit diagrams and check start control unit circuits. If the problem persists, renew the start control unit
B1026-11	Steering Column Lock - Circuit short to	■ Circuit short to ground	■ Refer to the electrical circuit diagrams and check electric steering column lock circuits

	ground		
B102B-67	Passive Key - Signal incorrect after event	■ Passive key authorization signal incorrect after event ■ Encrypted data exchange between electric steering column lock control module and central junction box does not match ■ Low speed CAN fault ■ Keyless vehicle module fault ■ Central junction box fault	■ Configure the module using the manufacturer approved diagnostic system. Check CAN communications between the modules
B102B-87	Passive Key - Missing message	■ Passive key authorization missing message ■ Confirm placement of key within vehicle ■ Low speed CAN fault ■ Key fob battery low /battery contact issue ■ Interference from other RF signal ■ Electromagnetic compatibility/noise	**NOTE:** The action below is only required if this DTC and DTC B1B01-87 have been stored, or vehicle start issue has been reported ■ Check whereabouts of keys, including spare and confirm correct functionality ■ Refer to the electrical circuit diagrams and check the power and ground circuits to the keyless vehicle module and receiver ■ Check CAN communications between central junction box and keyless vehicle module ■ Check key fob battery

		■ Keyless vehicle module fault ■ Receiver fault ■ Receiver not programmed correctly ■ Serial communication fault (between receiver and keyless vehicle module) ■ Key fault ■ Passive antenna fault ■ Central junction box fault	■ Check vehicle surroundings for possible sources of interference, move vehicle and retest. Check CAN network for interference /electromagnetic compatibility related issues ■ Check serial circuit between receiver and keyless vehicle module. Refer to the electrical circuit diagrams and check circuits to all three antennas ■ Disconnect battery, then re-connect - confirm correct operation by re-programming keys using the manufacturer approved diagnostic system
B1046-23	Front Fog Lamp Control Switch - Signal stuck low	■ Switch signal stuck low ■ Switch circuit short to ground ■ Switch activated for more than one minute ■ Switch fault	■ Check the operation of the switch. Refer to the electrical circuit diagrams and check the switch circuit. Clear the DTC and retest. If the DTC persists, renew the switch
B1047-23	Rear Fog Lamp Control Switch - Signal stuck low	■ Switch signal stuck low ■ Switch circuit short to ground ■ Switch activated for more than one minute ■ Switch fault	■ Check the operation of the switch. Refer to the electrical circuit diagrams and check the switch circuit. Clear the DTC and retest. If the DTC persists, renew the switch

B1051-23	Front Washer Switch - Signal stuck low	■ Switch signal stuck low ■ Switch circuit short to ground ■ Switch activated for more than one minute ■ Switch fault	■ Check the operation of the switch. Refer to the electrical circuit diagrams and check the switch circuit. Clear the DTC and retest. If the DTC persists, renew the switch
B1052-23	Rear Washer Switch - Signal stuck low	■ Switch signal stuck low ■ Switch circuit short to ground ■ Switch activated for more than one minute ■ Switch fault	■ Check the operation of the switch. Refer to the electrical circuit diagrams and check the switch circuit. Clear the DTC and retest. If the DTC persists, renew the switch
B1087-86	LIN Bus "A" - Signal invalid	■ The header of the LIN message received is incorrect	■ Clear the stored DTC and retest, if the DTC returns localize the fault, refer to the electrical circuit diagrams and disconnect the analogue clock (by removing the supply fuse) and retest. Check the operation of the steering wheel switches on the LIN bus circuit (i.e. cruise, gearshift paddles, information and entertainment lower switchpack where installed). If a fault is evident with either the analogue clock or the left-side steering wheel module, replace as required
B1087-88	LIN Bus "A" - Bus off	■ LIN bus circuit short to power or ground	■ Refer to the electrical circuit diagrams and check the LIN circuit between the central junction box, the left-side steering wheel module and the analogue clock module for short circuit to power or short circuit to ground
B1088-86	LIN Bus "B" - Signal invalid	■ Signal invalid	

			■ Refer to the electrical circuit diagrams and check the LIN B circuit between the central junction box and the rain/light sensor, battery backed sounder and volumetric sensor (where installed)
B1088-88	LIN Bus "B" - Bus off	■ Bus off	■ Refer to the electrical circuit diagrams and check the LIN B circuit between the central junction box and the rain/light sensor, battery backed sounder and volumetric sensor (where installed)
B108B-11	Start Button Circuit "A" - Circuit short to ground	■ Circuit short to ground	■ Refer to the electrical circuit diagrams and check the start button circuit
B108B-12	Start Button Circuit "A" - Circuit short to battery	■ Circuit short to power	■ Refer to the electrical circuit diagrams and check the start button circuit
B108B-13	Start Button Circuit "A" - Circuit open	■ Circuit open circuit	■ Refer to the electrical circuit diagrams and check the start button circuit
B108B-23	Start Button Circuit "A" - Signal stuck low	■ Start button signal stuck low ■ Switch activated for more than one minute ■ SW1 constantly active for a long period of time while button press detected at SW2 ■ Switch failure	■ Check the operation of the switch. Refer to the electrical circuit diagrams and check the start button circuit. Renew the start switch as required

B108C-11	Start Button Circuit "B" - Circuit short to ground	■ Circuit short to ground	■ Refer to the electrical circuit diagrams and check the start button circuit
B108C-12	Start Button Circuit "B" - Circuit short to battery	■ Circuit short to power	■ Refer to the electrical circuit diagrams and check the start button circuit
B108C-13	Start Button Circuit "B" - Circuit open	■ Circuit open circuit	■ Refer to the electrical circuit diagrams and check the start button circuit
B108C-23	Start Button Circuit "B" - Signal stuck low	■ Start button signal stuck low ■ Switch activated for more than one minute ■ SW1 constantly active for a long period of time while button press detected at SW2 ■ Switch failure	■ Check the operation of the switch. Refer to the electrical circuit diagrams and check the start button circuit. Renew the start switch as required
B1095-11	Wiper On/Off Relay - Circuit short to ground	■ Wiper on/off relay circuit short circuit to ground	■ Refer to the electrical circuit diagrams and check the circuit
B1095-12	Wiper On/Off Relay - Circuit short to battery	■ Wiper on/off relay circuit short circuit to power	■ Refer to the electrical circuit diagrams and check the circuit

B1095-13	Wiper On/Off Relay - Circuit open	■ Wiper on/off relay circuit open circuit	■ Refer to the electrical circuit diagrams and check the circuit
B1096-11	Wiper High/Low Relay - Circuit short to ground	■ Wiper circuit short circuit to ground	■ Refer to the electrical circuit diagrams and check the circuit
B1096-12	Wiper High/Low Relay - Circuit short to battery	■ Wiper circuit short circuit to power	■ Refer to the electrical circuit diagrams and check the circuit
B1096-13	Wiper High/Low Relay - Circuit open	■ Wiper circuit open circuit	■ Refer to the electrical circuit diagrams and check the circuit
B1097-11	Heated Windshield Relay - Circuit short to ground	■ Heated windshield relay circuit short circuit to ground	■ Refer to the electrical circuit diagrams and check the circuit
B1097-12	Heated Windshield Relay - Circuit short to battery	■ Heated windshield relay circuit short circuit to power	■ Refer to the electrical circuit diagrams and check the circuit
B1097-13	Heated Windshield Relay - Circuit open	■ Heated windshield relay circuit open circuit	■ Refer to the electrical circuit diagrams and check the circuit
B109D-11	Rear Courtesy Light - Circuit short to ground	■ Rear courtesy lamp circuit short circuit to ground	■ Refer to the electrical circuit diagrams and check the circuit
B109D-	Rear Courtesy		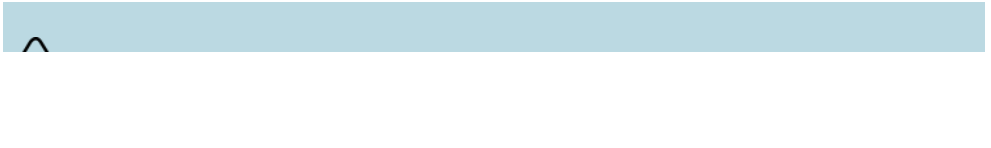

13	Light - Circuit open	■ Rear courtesy lamp circuit open circuit	**NOTE:** This DTC may be logged under normal operating conditions. No action required if function is correct ■ Refer to the electrical circuit diagrams and check the circuit
B109E-51	Remote Keyless Entry - Not programmed	■ Not programmed	■ Configure the system using the manufacturers approved diagnostic system
B10A2-31	Crash Input - No signal	■ No signal	■ Check the supplemental restraints system and engine control module for related DTCs. Refer to the electrical circuit diagrams and check the circuit between the supplemental restraints system, the central junction box and the engine control module
B10A2-38	Crash Input - Signal frequency incorrect	■ Signal frequency incorrect	■ Check the restraints control module for DTCs and rectify first
B10AB-51	Remote Keyless Entry Synchronization - Not programmed	■ Not programmed	■ Configure the system using the manufacturers approved diagnostic system
B10AD-09	Rain Sensor - Component Failures	■ Rain/light sensor obscured ■ Battery supply voltage below 9 volts	■ Check the rain/light sensor is not obscured. Check for related low voltage stored DTCs ■ Check the security and installation of the rain/light sensor. Clear the DTC and retest ■ If the DTC returns suspect an internal fault

		■ Sensor incorrectly installed ■ Component failure	
B10AD-83	Rain Sensor - Value of signal protection calculation incorrect	■ Value of signal protection calculation incorrect ■ Sensor fault	■ Clear the DTC and retest. If the problem persists, renew the rain /light sensor
B10AD-87	Rain Sensor - Missing message	■ Missing message ■ LIN slave node is not responding	■ Check the operation of the rain/light sensor. Refer to the electrical circuit diagrams and check the LIN circuit between the rain/light sensor and the central junction box. Should also check LIN control unit and rain/light sensor power and ground circuits
B10AD-96	Rain Sensor - Component internal failure	■ Component internal failure	■ Clear the DTC and retest. If the problem persists, renew the rain /light sensor
B10E5-11	PCM Wake-Up Signal - Circuit short to ground	■ Engine control module wake-up signal short to ground	■ Refer to the electrical circuit diagrams and test the early wake-up signal circuit
B10E5-15	PCM Wake-Up Signal - Circuit short to battery or open	■ Engine control module wake-up signal short circuit to power or open circuit	■ Refer to the electrical circuit diagrams and test the early wake-up signal circuit
B10F2-4B	Sunroof Control - Over temperature	■ Sunroof control motor over temperature	■ Check the sunroof for smooth operation and obstructions that would cause the motor to overheat. If necessary, renew the motor

		■ Temperature sensor defective or not calibrated ■ Debris in the channels /guides ■ Cable(s) sticking /damaged ■ Roof opening panel not correctly aligned ■ Motor fault	
B10F2-74	Sunroof Control - Actuator slipping	■ Sunroof control motor slipping due to mechanical failure ■ Debris in the channels /guides ■ Cable(s) sticking /damaged ■ Roof opening panel not correctly aligned ■ Motor fault	■ Remove the motor and check the cables for free movement and damage. Check the sunroof for smooth operation and obstructions that would cause the motor to slip. If necessary, renew the motor
B10F2-93	Sunroof Control - No operation	■ No operation, roof position is not valid ■ Motor position not calibrated	■ Configure the module using the manufacturers approved diagnostic system
B10F2-9A	Sunroof Control - Component or	■ Component or system operating conditions	■ This DTC is not necessarily a fault and may be logged when the sunroof has been operated continuously and the sunroof has

	system operating conditions	■ Excessive continuous motor operation	temporarily been disabled to prevent motor over-heat. Clear the DTC and check the operation of the switch and sunroof operation
B10F8-11	Accessory Socket 'A' Relay - Circuit short to ground	■ Accessory socket 'A' relay circuit short to ground	■ Refer to the electrical circuit diagrams and check the circuit
B10F8-12	Accessory Socket 'A' Relay - Circuit short to battery	■ Accessory socket 'A' relay circuit short to power	■ Refer to the electrical circuit diagrams and check the circuit
B10F8-13	Accessory Socket 'A' Relay - Circuit open	■ Accessory socket 'A' relay circuit open ground	■ Refer to the electrical circuit diagrams and check the circuit
B10F9-11	Accessory Socket 'B' Relay - Circuit short to ground	■ Accessory socket 'B' relay circuit short to ground	■ Refer to the electrical circuit diagrams and check the circuit
B10F9-12	Accessory Socket 'B' Relay - Circuit short to battery	■ Accessory socket 'B' relay circuit short to power	■ Refer to the electrical circuit diagrams and check the circuit
B10F9-13	Accessory Socket 'B' Relay - Circuit open	■ Accessory socket 'B' relay circuit open ground	■ Refer to the electrical circuit diagrams and check the circuit
B1102-11	Trailer Stop Lamp - Circuit short to ground	■ Trailer stop lamp circuit short to ground	■ Refer to the electrical circuit diagrams and check the circuit Repair as necessary

B1115-11	High Mounted Stop Lamp Control - Circuit short to ground	■ High mounted stop lamp control circuit short to ground	■ Refer to the electrical circuit diagrams and check the circuit Repair as necessary
B112B-83	Steering Wheel Module - Value of signal protection calculation incorrect	■ Value of signal protection calculation incorrect	■ Check the steering wheel switch functions to localize the failure. Clear the stored DTC and retest. If the DTC returns suspect the left-side steering wheel module and replace as required
B112B-87	Steering Wheel Module - Missing message	■ Missing message	■ Check the operation of the steering wheel switches on the LIN bus circuit (i.e. cruise, gearshift paddles, information and entertainment lower switchpack where installed) ■ Refer to the electrical circuit diagrams and check the LIN circuit between the steering wheel module and the central junction box. Check the left-side steering wheel module power and ground circuits
B112B-96	Steering Wheel Module - Component internal failure	■ Component internal failure	■ Clear the stored DTC and retest. If the DTC returns suspect the left-side steering wheel module and replace as required
B112C-83	Interior Motion Sensor - Value of signal protection calculation incorrect	■ Value of signal protection calculation incorrect	■ Clear the DTC and retest. If the problem persists, renew the volumetric sensor
B112C-87	Interior Motion Sensor - Missing	■ Missing message	■ Check the operation of the volumetric sensor ■ Refer to the electrical circuit diagrams and check the LIN circuit between the volumetric sensor and the central junction box. Should

	message		also check LIN control unit power and ground circuits. Clear the DTC and retest ■ If the DTC persists, renew the volumetric sensor
B112C-96	Interior Motion Sensor - Component internal failure	■ The central junction box has detected an internal error in the volumetric sensor	■ Clear the DTC and retest. If the problem persists, renew the volumetric sensor
B113C-11	Hazard Switch Illumination - Circuit short to ground	■ Hazard switch illumination circuit short circuit to ground	■ Refer to the electrical circuit diagrams and check the circuit. Repair as necessary
B113C-12	Hazard Switch Illumination - Circuit short to battery	■ Hazard switch illumination circuit short circuit to power	■ Refer to the electrical circuit diagrams and check the circuit. Repair as necessary
B113C-13	Hazard Switch Illumination - Circuit open	■ Hazard switch illumination circuit open circuit	■ Refer to the electrical circuit diagrams and check the circuit. Repair as necessary
B113E-23	External Boot /Trunk Release Switch - Signal stuck low	■ External luggage compartment lid release switch digital input circuit - Signal stuck low ■ Switch activated for more than one minute	■ Check the operation of the switch. Refer to the electrical circuit diagrams and check the external luggage compartment lid release switch digital input circuit for short to ground
B1140-	Engine Crank		

11	Authorization - Circuit short to ground	■ Engine crank authorization signal circuit short circuit to ground	■ Refer to the electrical circuit diagrams and check engine crank authorization signal circuit
B1140-15	Engine Crank Authorization - Circuit short to battery or open	■ Engine crank authorization signal circuit short circuit to power or open circuit	■ Refer to the electrical circuit diagrams and check engine crank authorization signal circuit
B1145-11	Glove Box Locking Motor - Circuit short to ground	■ Glove box locking motor circuit short circuit to ground	■ Refer to the electrical circuit diagrams and check the circuit
B1145-12	Glove Box Locking Motor - Circuit short to battery	■ Glove box locking motor circuit short circuit to power	■ Refer to the electrical circuit diagrams and check the circuit
B1145-13	Glove Box Locking Motor - Circuit open	■ Glove box locking motor circuit open circuit	■ Refer to the electrical circuit diagrams and check the circuit
B1146-11	Passive Sounder Supply - Circuit short to ground	■ Security passive sounder control circuit short circuit to ground	■ Refer to the electrical circuit diagrams and check the security passive sounder control circuit
B1146-15	Passive Sounder Supply	■ Security passive sounder control circuit short circuit to power, open circuit	■ Refer to the electrical circuit diagrams and check the security passive sounder control circuit

	- Circuit short to battery or open		
B1182-51	Tire Pressure Monitoring System - Not programmed	■ Diagnostic test to verify reception of all tire low pressure sensors has failed	**NOTE:** This DTC is for event information only and does not indicate a fault. ■ No action required
B11D1-86	LIN Bus "C" - Signal invalid	■ Signal invalid	■ Refer to the electrical circuit diagrams and check the roof opening panel LIN circuit between the roof opening panel control module, passenger fuse box and the central junction box
B11D1-88	LIN Bus "C" - Bus off	■ Bus off ■ Roof opening panel LIN network short to power, ground	■ Refer to the electrical circuit diagrams and check the roof opening panel LIN circuit between the roof opening panel control module, passenger fuse box and the central junction box
B11D9-92	Vehicle Battery - Performance or incorrect operation	■ Internal electronic failure	■ Renew the battery monitoring system control module
B11DB-49	Battery Monitoring Module - Internal electronic failure	■ Internal electronic failure	■ Renew the battery monitoring system control module

B11DB-83	Battery Monitoring Module - Value of signal protection calculation incorrect	■ Value of signal protection calculation incorrect	■ Clear the DTC and retest. If the problem persists, renew the battery monitoring system control module
B11DB-87	Battery Monitoring Module - Missing message	■ Missing message ■ Battery monitoring system control module connector dis-connected/poor connection ■ Battery monitoring system control module to passenger fuse box LIN circuit - Open circuit ■ Battery monitoring system control module to battery positive monitor circuit open circuit ■ Battery monitoring system control module /passenger fuse box failure	**NOTE:** Fault logging is inhibited by the CCF, but an incorrectly configured CCF could give erroneous DTC logging ■ Check the operation of the monitoring system control module. Refer to the electrical circuit diagrams and check the LIN circuit between the monitoring system control module and the central junction box. Should also check LIN control unit power and ground circuits
B123A-11	Left Front Turn Indicator - Circuit short to ground	■ Left front turn signal lamp circuit short to ground	■ Refer to the electrical circuit diagrams and check left front turn signal lamp circuit

B123A-15	Left Front Turn Indicator - Circuit short to battery or open	■ Left front turn signal lamp circuit short to power or open circuit	■ Refer to the electrical circuit diagrams and check left front turn signal lamp circuit
B123B-11	Right Front Turn Indicator - Circuit short to ground	■ Right front turn signal lamp circuit short to ground	■ Refer to the electrical circuit diagrams and check right front turn signal lamp circuit
B123B-15	Right Front Turn Indicator - Circuit short to battery or open	■ Right front turn signal lamp circuit short to power or open circuit	■ Refer to the electrical circuit diagrams and check right front turn signal lamp circuit
B1247-11	Left Rear Turn Indicator - Circuit short to ground	■ Left rear turn signal lamp circuit short to ground	■ Refer to the electrical circuit diagrams and check left rear turn signal lamp circuit
B1247-15	Left Rear Turn Indicator - Circuit short to battery or open	■ Left rear turn signal lamp circuit short to power or open circuit	■ Refer to the electrical circuit diagrams and check left rear turn signal lamp circuit
B1248-11	Right Rear Turn Indicator - Circuit short to ground	■ Right rear turn signal lamp circuit short to ground	■ Refer to the electrical circuit diagrams and check right rear turn signal lamp circuit
B1248-15	Right Rear Turn Indicator - Circuit short to battery or open	■ Right rear turn signal lamp circuit short to power or open circuit	■ Refer to the electrical circuit diagrams and check right rear turn signal lamp circuit
B1298-73	Steering Column Adjust	■ Internal switch fault	■ Check the switch operation. Refer to the electrical circuit diagrams and check the column switch circuit

	Up Switch - Actuator stuck closed		
B1299-73	Steering Column Adjust Down Switch - Actuator stuck closed	■ Internal switch fault	■ Check the switch operation. Refer to the electrical circuit diagrams and check the column switch circuit
B129A-86	LIN Bus "D" - Signal invalid	■ Signal invalid	■ Refer to the electrical circuit diagrams and check the immobilizer antenna LIN circuit between the central junction box and the immobilizer antenna unit. Check for other immobilizer DTCs
B129A-88	LIN Bus "D" - Bus off	■ Bus off ■ Immobilizer antenna LIN network short to power, ground - this is detected when nothing is read back after a header is transmitted	■ Refer to the electrical circuit diagrams and check the immobilizer antenna LIN circuit between the central junction box and the immobilizer antenna unit. Check for other immobilizer DTCs
B12A1-73	Steering Column Adjust Out Switch - Actuator stuck closed	■ Internal switch fault	■ Check the switch operation. Refer to the electrical circuit diagrams and check the column switch circuit
B12A2-73	Steering Column Adjust In Switch - Actuator stuck closed	■ Internal switch fault	■ Check the switch operation. Refer to the electrical circuit diagrams and check the column switch circuit

B12A3-11	Steering Column Adjust Motor Drive A - Circuit short to ground	■ Motor circuit short to ground ■ Motor fault	■ Refer to the electrical circuit diagrams and check the circuit between the steering column adjust motor and the central junction box. If no circuit faults are evident, suspect the steering column adjust motor
B12A3-12	Steering Column Adjust Motor Drive A - Circuit short to battery	■ Motor circuit short to power ■ Motor fault	■ Refer to the electrical circuit diagrams and check the circuit between the steering column adjust motor and the central junction box. If no circuit faults are evident, suspect the steering column adjust motor
B12A3-15	Steering Column Adjust Motor Drive A - Circuit short to battery or open	■ Motor circuit short to power or open circuit ■ Motor fault	■ Refer to the electrical circuit diagrams and check the circuit between the steering column adjust motor and the central junction box. If no circuit faults are evident, suspect the steering column adjust motor
B12A4-11	Steering Column Adjust Motor Drive B - Circuit short to ground	■ Motor circuit short to ground ■ Motor fault	■ Refer to the electrical circuit diagrams and check the circuit between the steering column adjust motor and the central junction box. If no circuit faults are evident, suspect the steering column adjust motor
B12A4-12	Steering Column Adjust Motor Drive B - Circuit short to battery	■ Motor circuit short to ground ■ Motor fault	■ Refer to the electrical circuit diagrams and check the circuit between the steering column adjust motor and the central junction box. If no circuit faults are evident, suspect the steering column adjust motor
B12A4-15	Steering Column Adjust Motor Drive B - Circuit short to battery or open	■ Motor circuit short to power or open circuit ■ Motor fault	■ Refer to the electrical circuit diagrams and check the circuit between the steering column adjust motor and the central junction box. If no circuit faults are evident, suspect the steering column adjust motor
B12A7-	Steering		

31	Column Tilt Sensor A - No signal	■ Steering column tilt sensor no signal ■ Sensor fault	■ Refer to the electrical circuit diagrams and check the circuit between the steering column tilt sensor and the central junction box. If no circuit faults are evident, suspect the steering column tilt sensor
B12A8-31	Steering Column Telescope Sensor A - No signal	■ Steering column telescope sensor no signal ■ Sensor fault	■ Refer to the electrical circuit diagrams and check the circuit between the steering column telescope sensor and the central junction box. If no circuit faults are evident, suspect the steering column telescope sensor
B12A9-54	Steering Column Tilt Sensor B - Missing calibration	■ Steering column tilt sensor missing calibration	■ Check for other steering column related DTCs. Calibrate the sensor using the manufacturer approved diagnostic system
B12A9-62	Steering Column Tilt Sensor B - Signal compare failure	■ Steering column tilt sensor signal compare failure ■ Harness/connector issue	■ Refer to the electrical circuit diagrams and check the steering tilt sensor, connector and circuits
B12AA-54	Steering Column Telescope Sensor B - Missing calibration	■ Steering column telescope sensor missing calibration	■ Check for other steering column related DTCs. Calibrate the sensor using the manufacturer approved diagnostic system
B12AA-62	Steering Column Telescope Sensor B -	■ Steering column telescope sensor signal compare failure	■ Refer to the electrical circuit diagrams and check the steering telescope sensor, connector and circuits

	Signal compare failure	■ Harness/connector issue	
B12C9-86	LIN Bus "E" - Signal invalid	■ Battery monitoring system signal invalid	■ Refer to the electrical circuit diagrams and check the battery monitoring system LIN circuit between the central junction box and the battery monitoring system control module. Check for other battery monitoring system related DTCs
B12C9-88	LIN Bus "E" - Bus off	■ Bus off ■ Battery monitoring system LIN network short to power, ground - This is detected when nothing is read back after a header is transmitted	■ Refer to the electrical circuit diagrams and check the battery monitoring system LIN circuit between the central junction box and the battery monitoring system control module. Check for other battery monitoring system related DTCs
B12E8-23	Liftgate /Tailgate Control/Release Switch - Signal stuck low	■ Liftgate/tailgate control /release switch signal stuck low	■ Refer to the electrical circuit diagrams and check the circuit
B12EE-11	Tailgate/Trunk Release - Circuit short to ground	■ Tailgate/Trunk release circuit short circuit to ground	■ Refer to the electrical circuit diagrams and check the circuit
B12EF-11	Trailer Fog Lamp - Circuit short to ground	■ Trailer fog lamp circuit short to ground	■ Refer to the electrical circuit diagrams and check the circuit
B12F3-	Secondary		■ Refer to the electrical circuit diagrams and check the circuit

11	Tailgate Release - Circuit short to ground	■ Secondary tailgate release circuit short circuit to ground	
B12F4-12	Vehicle Speed Output - Circuit short to battery	■ Circuit short circuit to power	■ Refer to the electrical circuit diagrams and check the circuit
B12F5-12	Fridge Relay Control - Circuit short to battery	■ Circuit short to power	■ Refer to the electrical circuit diagrams and check the circuit
B12F6-11	Headlamp Power Supply A - Circuit short to ground	■ Circuit short to ground	■ Refer to the electrical circuit diagrams and check the circuit
B12FA-11	Power Steering Solenoid Control A - Circuit short to ground	NOTE: Circuit reference Solenoid valve + ■ Servotronic valve circuit short circuit to ground (customer may complain of heavy steering or variable steering effort required)	■ Refer to the electrical circuit diagrams and check the circuit between the servotronic valve and the central junction box
B12FA-1F	Power Steering Solenoid	NOTE:	■ Refer to the electrical circuit diagrams and check the servotronic valve circuit for short circuit to ground, short circuit to power, open

	Control A - Circuit intermittent	Circuit reference Solenoid valve + ■ Servotronic valve circuit - Short circuit to ground, short circuit to power, open circuit, high resistance (customer may complain of heavy steering or variable steering effort required)	circuit, high resistance (note, the fault may be an intermittent one). Repair circuit as required, clear DTC and retest
B12FA-13	Power Steering Solenoid Control A - Circuit open	NOTE: Circuit reference Solenoid valve + ■ Servotronic valve circuit open circuit (customer may complain of heavy steering or variable steering effort required)	■ Refer to the electrical circuit diagrams and check the circuit between the servotronic valve and the central junction box
B12FB-12	Power Steering Solenoid Control B -	NOTE:	■ Refer to the electrical circuit diagrams and check the circuit between the servotronic valve and the central junction box

	Circuit short to battery	Circuit reference Solenoid valve - ■ Servotronic valve circuit short circuit to power (customer may complain of heavy steering or variable steering effort required)	
B12FB-14	Power Steering Solenoid Control B - Circuit short to ground or open	**NOTE:** Circuit reference Solenoid valve - ■ Servotronic valve circuit short circuit to ground, open circuit, high resistance (customer may complain of heavy steering or variable steering effort required)	**NOTE:** This DTC will not be logged during an on demand self-test routine. The DTC is only logged if the fault is noted continuously for over two seconds, during the on demand self-test routine the output from the servotronic valve is only monitored for a one second duration ■ Refer to the electrical circuit diagrams and check the servotronic valve circuit for short circuit to ground, open circuit, high resistance (note, the fault may be an intermittent one). Repair circuit as required, clear DTC and retest
B12FB-1F	Power Steering Solenoid Control B - Circuit intermittent	**NOTE:** Circuit reference Solenoid valve -	■ Refer to the electrical circuit diagrams and check the servotronic valve circuit for short circuit to ground, short circuit to power, open circuit, high resistance (note, the fault may be an intermittent one). Repair circuit as required, clear DTC and retest

		▪ Servotronic valve circuit - Short circuit to ground, short circuit to power, open circuit, high resistance (customer may complain of heavy steering or variable steering effort required)	
B130B-11	Right Rear Fog Lamp - Circuit short to ground	▪ Circuit short to ground	▪ Refer to the electrical circuit diagrams and check the circuit for short to ground
B130B-15	Right Rear Fog Lamp - Circuit short to battery or open	▪ Circuit short to power or open	▪ Refer to the electrical circuit diagrams and check the circuit for short to power or open circuit
B130E-11	Left Rear Fog Lamp - Circuit short to ground	▪ Circuit short to ground	▪ Refer to the electrical circuit diagrams and check the circuit for short to ground
B130E-15	Left Rear Fog Lamp - Circuit short to battery or open	▪ Circuit short to power or open	▪ Refer to the electrical circuit diagrams and check the circuit for short to power or open circuit
B1311-83	Clock Module - Value of signal protection calculation incorrect	▪ Value of signal protection calculation incorrect ▪ LIN 1 circuit fault	▪ Clear the DTC and retest. Refer to electrical circuit diagrams and check power and ground connections to clock module, check LIN circuit. Rectify any wiring faults. If the problem persists, renew the clock module

B1311-87	Clock Module - Missing message	■ The central junction box has detected that the clock is not responding	■ Refer to the electrical circuit diagrams to locate the fused supply circuit to the analogue clock. With the ignition supply in the OFF state, remove and reinstall the fuse. Clear the DTC and retest. Refer to electrical circuit diagrams and check power and ground connections to clock module, check LIN circuit. Rectify any wiring faults. If the problem persists, renew the clock module
B1311-96	Clock Module - Component internal failure	■ Component internal failure	■ Refer to the electrical circuit diagrams to locate the fused supply circuit to the analogue clock. With the ignition supply in the OFF state, remove and reinstall the fuse. The clock hands will now set to the 12 position. Cycle the ignition state to ON (the clock should now have self-adjusted to the time currently set within the central junction box). Record then clear the stored DTC, cycle the ignition state to OFF, return the state to ON, retest, if the DTC returns, renew the analogue clock module
B134D-11	Headlamp Control A - Circuit short to ground	■ Circuit short to ground	■ Refer to the electrical circuit diagrams and check for short circuit to ground between the central junction box and the headlamp levelling control module (either left or right side control module)
B134D-14	Headlamp Control A - Circuit short to ground or open	■ Circuit short to ground or open	■ Check for DTC B134D-11 this will confirm circuit short to ground. Refer to the electrical circuit diagrams and check for short circuit to ground between the central junction box and the headlamp levelling control module (either left or right side control module)
B134E-11	Switch Illumination Adjustment Control - Circuit short to ground	■ Circuit short to ground	■ Refer to the electrical circuit diagrams and check the circuit

B134E-12	Switch Illumination Adjustment Control - Circuit short to battery	■ Circuit short to power	■ Refer to the electrical circuit diagrams and check the circuit
B134E-13	Switch Illumination Adjustment Control - Circuit open	■ Circuit open circuit	■ Refer to the electrical circuit diagrams and check the circuit
B134F-11	Headlamp Flash Switch - Circuit short to ground	■ Circuit short to ground	■ Refer to the electrical circuit diagrams and check the circuit
B134F-1E	Headlamp Flash Switch - Circuit resistance out of range	■ Circuit resistance out of range	■ Check the operation of the switch. Refer to the electrical circuit diagrams and check the circuit
B134F-23	Headlamp Flash Switch - Signal stuck low	■ Circuit signal stuck low ■ Switch activated for more than one minute	■ Check the operation of the switch. Refer to the electrical circuit diagrams and check the circuit
B136B-11	Suspension Control Module Wake-up Signal - Circuit short to ground	■ Circuit short to ground	■ Refer to the electrical circuit diagrams and check the circuit
B136B-15	Suspension Control Module Wake-up Signal	■ Circuit short to power or open circuit	■ Refer to the electrical circuit diagrams and check the circuit

	- Circuit short to battery or open		
B136D-11	Front Wiper Intermittent Delay Control - Circuit short to ground	■ Circuit short circuit to ground	■ Refer to the electrical circuit diagrams and check the circuit
B136D-15	Front Wiper Intermittent Delay Control - Circuit short to battery or open	■ Circuit short circuit to power or open circuit	■ Refer to the electrical circuit diagrams and check the circuit
B136D-1E	Front Wiper Intermittent Delay Control - Circuit resistance out of range	■ Circuit resistance out of range	■ Check the operation of the switch. Refer to the electrical circuit diagrams and check the circuit
B1A75-11	Fuel Sender No. 1 - Circuit short to ground	■ Active fuel level sensor circuit - Short circuit to ground ■ Fuel level sensor fault	■ Refer to the electrical circuit diagrams and check the active fuel level sensor circuit for short circuit to ground. Repair circuit as required, clear DTC and retest ■ If fault persists, check and install a new active fuel level sensor as required. Clear DTC and retest
B1A75-15	Fuel Sender No. 1 - Circuit short to battery or open	■ Active fuel level sensor circuit - Short circuit to power, open circuit, high resistance ■ Fuel level sensor fault	■ Refer to the electrical circuit diagrams and check the active fuel level sensor circuit for short circuit to power, open circuit, high resistance. Repair circuit as required, clear DTC and retest ■ If fault persists, check and install a new active fuel level sensor as required. Clear DTC and retest

B1A75-1C	Fuel Sender No. 1 - Circuit voltage out of range	■ Active fuel level sensor circuit - Short circuit to ground, short circuit to power, open circuit, high resistance ■ Fuel level sensor fault	■ Refer to the electrical circuit diagrams and check the active fuel level sensor circuit for short circuit to ground, short circuit to power, open circuit, high resistance. Repair circuit as required, clear DTC and retest ■ Clear DTC and retest. If fault persists, check and install a new active fuel level sensor as required. Clear DTC and retest
B1A76-11	Fuel Sender No. 2 - Circuit short to ground	■ Passive fuel level sensor circuit - Short circuit to ground ■ Fuel level sensor fault	■ Refer to the electrical circuit diagrams and check the passive fuel level sensor circuit for short circuit to ground. Repair circuit as required, clear DTC and retest ■ If fault persists, check and install a new passive fuel level sensor as required. Clear DTC and retest
B1A76-15	Fuel Sender No. 2 - Circuit short to battery or open	■ Passive fuel level sensor circuit - Short circuit to power, open circuit, high resistance ■ Fuel level sensor fault	■ Refer to the electrical circuit diagrams and check the passive fuel level sensor circuit for short circuit to power, open circuit, high resistance. Repair circuit as required, clear DTC and retest ■ If fault persists, check and install a new passive fuel level sensor as required. Clear DTC and retest
B1A76-1C	Fuel Sender No. 2 - Circuit voltage out of range	■ Passive fuel level sensor circuit - Short circuit to ground, short circuit to power, open circuit, high resistance ■ Fuel level sensor fault	■ Refer to the electrical circuit diagrams and check the passive fuel level sensor circuit for short circuit to ground, short circuit to power, open circuit, high resistance. Repair circuit as required, clear DTC and retest ■ Clear DTC and retest. If fault persists, check and install a new passive fuel level sensor as required. Clear DTC and retest
B1A84-51	Car Configuration Data - Not programmed	■ Not programmed	■ Configure the module using the manufacturer approved diagnostic system

B1A85-96	Ambient Light Sensor - Component internal failure	■ Rain/light sensor obscured ■ Sensor incorrectly installed ■ Component failure	■ Check the rain/light sensor is not obscured. Check the security and installation of the rain/light sensor. Clear the DTC and retest. If the DTC returns suspect an internal fault
B1A91-31	Speed/Position Sensor A - No signal	■ No signal from sensor (restricted sunroof functionality) ■ Hall sensor A failure	■ Clear the DTC and retest. If the problem persists, renew the roof opening panel module
B1A92-31	Speed/Position Sensor B - No signal	■ No signal from sensor (restricted sunroof functionality) ■ Hall sensor B failure	■ Clear the DTC and retest. If the problem persists, renew the roof opening panel module
B1B01-55	Key Transponder - Not configured	■ Not configured	■ Configure the module using the manufacturers approved diagnostic system
B1B01-64	Key Transponder - Signal plausibility failure	■ Signal plausibility failure	■ Refer to the electrical circuit diagrams and check the power and ground circuits to the central junction box and keyless vehicle module. Check CAN communications between the modules. Re-synchronize ID by re-configuring the keyless vehicle module as a new module
B1B01-81	Key Transponder - Invalid serial data received	■ Invalid serial data received	■ Refer to the electrical circuit diagrams and check the power and ground circuits to the central junction box and keyless vehicle

			module. Check CAN communications between the modules. Re-synchronize ID by re-configuring the keyless vehicle module as a new module
B1B01-87	Key Transponder - Missing message	■ This DTC could be logged if 'Smart Key Not Found' warning message is displayed, and the start button is pressed without the key in the correct location as defined in the driver handbook ■ No communication from key transponder during alternative (not passive) start event	■ First confirm that the customer has not performed a start event with the key incorrectly located when the warning message 'Smart Key Not Found' is displayed. Re-synchronize ID by re-configuring the immobilizer antenna unit as a new module. Refer to the electrical circuit diagrams and check the power and ground circuits to the immobilizer antenna unit
B1B33-51	Target ID Transfer - Not programmed	■ Not programmed ■ A new engine control module has been installed ■ Failed communication with engine management system	■ If necessary, program the relevant module using the manufacturers approved diagnostic system. Clear/ignore DTC
B1B33-64	Target ID Transfer - Signal plausibility failure	■ Signal plausibility failure ■ Failed communication with engine management system	■ No action necessary, clear/ignore DTC

B1B33-81	Target ID Transfer - Invalid serial data received	■ Invalid serial data received ■ Failed communication with engine management system	■ No action necessary, clear/ignore DTC
B1B33-87	Target ID Transfer - Missing message	■ Missing message ■ Failed communication with engine control module	**NOTE:** Only diagnose this DTC if the Customer is reporting a start related issue ■ Clear DTC and retest. If problem persists, carry out CAN network integrity test and on demand self-test using the manufacturer approved diagnostic system. Alternatively, refer to the electrical circuit diagrams and check CAN circuits
B1B56-46	Sunroof Module - Calibration /parameter memory failure	■ Roof opening panel control module - Calibration/parameter memory failure	■ Clear the DTC and retest. Re-calibrate the roof opening panel using the manufacturers approved diagnostic system. If the problem persists, renew the roof opening panel control module
B1B56-83	Sunroof Module - Value of signal protection calculation incorrect	■ Value of signal protection calculation incorrect	■ Clear the DTC and retest. If the DTC resets, renew the roof opening panel control module
B1B56-87	Sunroof Module - Missing	■ Missing message	**NOTE:**

	message	■ LIN 3 circuit fault	Fault logging is inhibited by the CCF, but an incorrectly configured CCF could give erroneous DTC logging ■ Check the operation of the roof opening panel control module. Refer to the electrical circuit diagrams and check the LIN circuit between the roof opening panel control module and the central junction box. Check LIN control unit power and ground circuits
B1C37-23	Master Lock Switch Stuck - Signal stuck low	■ Master central lock switch signal circuit short circuit to ground ■ Switch activated for more than one minute ■ Master central lock switch stuck/jammed ■ Master central lock switch failure	■ Refer to the electrical circuit diagrams and check the master switch lock circuit. Check the switch operation, renew as necessary
B1C43-23	Master Interior Lamp Switch Stuck - Signal stuck low	■ Interior lamp circuit short to ground ■ Switch activated for more than one minute ■ Interior lamp switch fault	■ Refer to the electrical circuit diagrams and check the interior lamp circuit. Check the switch operation, renew as necessary
B1C44-67	Rear Wiper Park Position	■ Rear wiper park position circuit short to power, ground, open circuit	■ Ensure motor/mechanism is not jammed or seized. Clear the DTC and retest. If the DTC returns refer to the electrical circuit diagrams

	Switch Stuck - Signal incorrect after event	■ Rear wiper motor park switch fault	and check the rear wiper park position circuit. If no circuit fault found suspect an internal fault with the rear wiper motor, check and renew as required
B1C45-67	Front Wiper Park Position Switch Stuck - Signal incorrect after event	■ Front wiper park position circuit short to power, ground, open circuit ■ Front wiper motor park switch fault	■ Ensure motor/mechanism is not jammed or seized. Clear the DTC and retest. If the DTC returns refer to the electrical circuit diagrams and check the front wiper park position circuit. If no circuit fault found suspect an internal fault with the front wiper motor, check and renew as required
B1C55-12	Horn Relay - Circuit short to battery	■ Horn relay coil circuit short to power	■ Refer to the electrical circuit diagrams and check the horn relay circuit, repair as necessary
B1C77-11	Rear Wiper Relay - Circuit short to ground	■ Rear wiper fast relay coil circuit short to ground	■ Refer to the electrical circuit diagrams and check the rear wiper fast relay circuit, repair/renew as necessary
B1C77-12	Rear Wiper Relay - Circuit short to battery	■ Rear wiper fast relay coil circuit short to power	■ Refer to the electrical circuit diagrams and check the rear wiper fast relay circuit, repair/renew as necessary
B1C77-13	Rear Wiper Relay - Circuit open	■ Rear wiper fast relay coil open circuit	■ Refer to the electrical circuit diagrams and check the rear wiper fast relay circuit, repair/renew as necessary
B1C82-11	Headlamp Washer Relay A - Circuit short to ground	■ Headlamp washer relay output circuit short to ground	■ Refer to the electrical circuit diagrams and check the headlamp washer pump relay circuit, repair/renew as necessary

B1C82-12	Headlamp Washer Relay A - Circuit short to battery	■ Headlamp washer relay output circuit short to power	■ Refer to the electrical circuit diagrams and check the headlamp washer pump relay circuit, repair/renew as necessary
B1C82-13	Headlamp Washer Relay A - Circuit open	■ Headlamp washer relay output circuit open circuit	■ Refer to the electrical circuit diagrams and check the headlamp washer pump relay circuit, repair/renew as necessary
B1C90-11	Auxiliary Driving Lamps Relay - Circuit short to ground	■ Circuit short to ground	■ Refer to the electrical circuit diagrams and check the circuit, repair /renew as necessary
B1C90-12	Auxiliary Driving Lamps Relay - Circuit short to battery	■ Circuit short to power	■ Refer to the electrical circuit diagrams and check the circuit, repair /renew as necessary
B1C90-13	Auxiliary Driving Lamps Relay - Circuit open	■ Circuit open circuit	■ Refer to the electrical circuit diagrams and check the circuit, repair /renew as necessary
B1C98-11	Left Corner Lamp Circuit - Circuit short to ground	■ Left-side corner lamp short circuit to ground	■ Refer to the electrical circuit diagrams and check the circuit, repair /renew as necessary
B1C99-11	Right Corner Lamp Circuit - Circuit short to ground	■ Right-side corner lamp short circuit to ground	■ Refer to the electrical circuit diagrams and check the circuit, repair /renew as necessary
B1D00-11	Left Low Beam - Circuit short	■ Left low beam circuit short to ground	■ Refer to the electrical circuit diagrams and check left low beam circuit for short to ground

	to ground		
B1D00-15	Left Low Beam - Circuit short to battery or open	■ Left low beam circuit short circuit to power or open circuit	■ Refer to the electrical circuit diagrams and check left low beam circuit for short circuit to power or open circuit
B1D01-11	Right Low Beam - Circuit short to ground	■ Right low beam circuit short to ground	■ Refer to the electrical circuit diagrams and check right low beam circuit for short to ground
B1D01-15	Right Low Beam - Circuit short to battery or open	■ Right low beam circuit short circuit to power or open circuit	■ Refer to the electrical circuit diagrams and check right low beam circuit for short circuit to power or open circuit
B1D02-11	Left High Beam - Circuit short to ground	■ Left high beam circuit short to ground	■ Refer to the electrical circuit diagrams and check left high beam circuit for short to ground
B1D02-15	Left High Beam - Circuit short to battery or open	■ Left high beam circuit short circuit to power or open circuit	■ Refer to the electrical circuit diagrams and check left high beam circuit for short circuit to power or open circuit
B1D03-11	Right High Beam - Circuit short to ground	■ Right high beam circuit short to ground	■ Refer to the electrical circuit diagrams and check right high beam circuit for short to ground
B1D03-15	Right High Beam - Circuit short to battery or open	■ Right high beam circuit short circuit to power or open circuit	■ Refer to the electrical circuit diagrams and check right high beam circuit for short circuit to power or open circuit
B1D08-11	Left Trailer Direction Indicator	■ Left trailer turn signal short circuit to ground	■ Refer to the electrical circuit diagrams and check the circuit, repair /renew as necessary. If no fault found with vehicle suspect issue lies with trailer socket connected equipment

	Circuit - Circuit short to ground		
B1D09-11	Right Trailer Direction Indicator Circuit - Circuit short to ground	■ Right trailer turn signal short circuit to ground	■ Refer to the electrical circuit diagrams and check the circuit, repair /renew as necessary. If no fault found with vehicle suspect issue lies with trailer socket connected equipment
B1D13-11	Interior Lights Circuit "A" - Circuit short to ground	■ Circuit short circuit to ground	■ Refer to the electrical circuit diagrams and check the circuit
B1D13-15	Interior Lights Circuit "A" - Circuit short to battery or open	■ Circuit short circuit to power or open circuit	**NOTE:** This DTC may be logged under normal operating conditions. No action required if function is correct ■ Refer to the electrical circuit diagrams and check the circuit
B1D17-83	Battery Backed Sounder - Value of signal protection calculation incorrect	■ Value of signal protection calculation incorrect	■ Clear the DTC and retest. If the problem persists, renew the battery backed sounder
B1D17-87	Battery Backed Sounder - Missing message	■ Missing message	**NOTE:** Fault logging is inhibited by the CCF, but an incorrectly configured CCF could give erroneous DTC logging

			■ Check the operation of the battery backed sounder. Refer to the electrical circuit diagrams and check the LIN circuit between the battery backed sounder and the central junction box. Should also check LIN control unit power and ground circuits
B1D17-96	Battery Backed Sounder - Component internal failure	■ Component internal failure	■ Clear the DTC and retest, if the problem persists renew battery backed sounder
B1D35-23	Hazard Switch Stuck - Signal stuck low	■ Hazard switch circuit short to ground ■ Switch activated for more than one minute ■ Hazard switch fault	■ Check the hazard switch operation, refer to the electrical circuit diagrams and check the hazard switch circuit. Repair/renew as necessary
B1D36-11	Turn Indicator Switch - Circuit short to ground	■ Circuit short circuit to ground	■ Refer to the electrical circuit diagrams and check the circuit, repair /renew as necessary
B1D36-15	Turn Indicator Switch - Circuit short to battery or open	■ Circuit to power or open circuit	■ Refer to the electrical circuit diagrams and check the circuit, repair /renew as necessary
B1D36-1E	Turn Indicator Switch - Circuit resistance out of range	■ Circuit resistance out of range	■ Check the switch operation. Refer to the electrical circuit diagrams and check the circuit, repair/renew as necessary
B1D97-96	Tilt Sensor - Component	■ Component internal failure	■ Clear the DTC and retest, if the problem persists renew the battery backed sounder

	internal failure		
C0079-54	Variable Effort Steering - Missing calibration	■ Missing calibration	■ Calibrate/configure the feature using the manufacturers approved diagnostic system
C111A-11	Right Stop Lamp - Circuit short to ground	■ Right stop lamp circuit short to ground	■ Refer to the electrical circuit diagrams and check right stop lamp circuit
C111A-15	Right Stop Lamp - Circuit short to battery or open	■ Right stop lamp circuit short to power or open circuit	■ Refer to the electrical circuit diagrams and check right stop lamp circuit
C111B-11	Left Stop Lamp - Circuit short to ground	■ Left stop lamp circuit short to ground	■ Refer to the electrical circuit diagrams and check left stop lamp circuit
C111B-15	Left Stop Lamp - Circuit short to battery or open	■ Left stop lamp circuit short to power or open circuit	■ Refer to the electrical circuit diagrams and check left stop lamp circuit
C1A56-16	Left Front Tire Pressure Sensor and Transmitter Assembly - Circuit voltage below threshold	■ Front left tire pressure sensor internal battery voltage low	△ **NOTE:** This DTC is for event information only and does not indicate a fault. ■ No action required
C1A56-	Left Front Tire		△ **NOTE:**

86	Pressure Sensor and Transmitter Assembly - Signal invalid	■ Front left tire pressure sensor failure ■ Pressure, temperature or acceleration signal (s) out of range	This DTC is for event information only and does not indicate a fault. ■ No action required
C1A56-93	Left Front Tire Pressure Sensor and Transmitter Assembly - No operation	■ Front left tire pressure sensor not installed ■ Front left tire pressure sensor internal failure, tire pressure monitoring system RF receiver internal failure or interference	△ NOTE: Tire pressure sensor wheel position information may be incorrect if the wheels have been swapped during or after the failure event. ■ Check that a front left tire pressure sensor is installed ■ Using the manufacturer approved diagnostic system, perform routine - Tire Pressure Monitoring Tire Pressure Sensor Test. If fewer than 4 sensors fail, install new sensors as necessary. If all 4 sensors fail: ■ Check that the correct RF receiver is installed (by part number) ■ Review potential sources of electrical interference (power adaptors, laptop/navigation screens, etc)
C1A57-12	Left Front Initiator - Circuit short to battery	■ Tire pressure monitoring system front left initiator circuit short circuit to power	■ Refer to the electrical circuit diagrams and check the tire pressure monitoring system front left initiator circuit for short circuit to power
C1A57-14	Left Front Initiator - Circuit short to	■ Tire pressure monitoring system front left initiator	■ Refer to the electrical circuit diagrams and check the tire pressure monitoring system front left initiator circuit for short circuit to ground, open circuit, high resistance

	ground or open	circuit short circuit to ground, open circuit, high resistance	
C1A58-16	Right Front Tire Pressure Sensor and Transmitter Assembly - Circuit voltage below threshold	■ Front right tire pressure sensor internal battery voltage low	**NOTE:** This DTC is for event information only and does not indicate a fault. ■ No action required
C1A58-86	Right Front Tire Pressure Sensor and Transmitter Assembly - Signal invalid	■ Front right tire pressure sensor failure ■ Pressure, temperature or acceleration signal (s) out of range	**NOTE:** This DTC is for event information only and does not indicate a fault. ■ No action required
C1A58-93	Right Front Tire Pressure Sensor and Transmitter Assembly - No operation	■ Front right tire pressure sensor not installed ■ Front right tire pressure sensor internal failure, tire pressure monitoring system RF receiver internal failure or interference	**NOTE:** Tire pressure sensor wheel position information may be incorrect if the wheels have been swapped during or after the failure event. ■ Check that a front right tire pressure sensor is installed

			■ Using the manufacturer approved diagnostic system, perform routine - Tire Pressure Monitoring Tire Pressure Sensor Test. If fewer than 4 sensors fail, install new sensors as necessary. If all 4 sensors fail: ■ Check that the correct RF receiver is installed (by part number) ■ Review potential sources of electrical interference (power adaptors, laptop/navigation screens, etc)
C1A59-12	Right Front Initiator - Circuit short to battery	■ Tire pressure monitoring system front right initiator circuit short circuit to power	■ Refer to the electrical circuit diagrams and check the tire pressure monitoring system front right initiator circuit for short circuit to power
C1A59-14	Right Front Initiator - Circuit short to ground or open	■ Tire pressure monitoring system front right initiator circuit short circuit to ground, open circuit, high resistance	■ Refer to the electrical circuit diagrams and check the tire pressure monitoring system front right initiator circuit for short circuit to ground, open circuit, high resistance
C1A60-16	Left Rear Tire Pressure Sensor and Transmitter Assembly - Circuit voltage below threshold	■ Rear left tire pressure sensor internal battery voltage low	**NOTE:** This DTC is for event information only and does not indicate a fault. ■ No action required
C1A60-86	Left Rear Tire Pressure Sensor and	■ Rear left tire pressure sensor failure	**NOTE:**

	Transmitter Assembly - Signal invalid	■ Pressure, temperature or acceleration signal (s) out of range	This DTC is for event information only and does not indicate a fault. ■ No action required
C1A60-93	Left Rear Tire Pressure Sensor and Transmitter Assembly - No operation	■ Rear left tire pressure sensor not installed ■ Rear left tire pressure sensor internal failure, tire pressure monitoring system RF receiver internal failure or interference	**NOTE:** Tire pressure sensor wheel position information may be incorrect if the wheels have been swapped during or after the failure event. ■ Check that a rear left tire pressure sensor is installed ■ Using the manufacturer approved diagnostic system, perform routine - Tire Pressure Monitoring Tire Pressure Sensor Test. If fewer than 4 sensors fail, install new sensors as necessary. If all 4 sensors fail: ■ Check that the correct RF receiver is installed (by part number) ■ Review potential sources of electrical interference (power adaptors, laptop/navigation screens, etc)
C1A61-12	Left Rear Initiator - Circuit short to battery	■ Tire pressure monitoring system rear left initiator circuit short circuit to power	■ Refer to the electrical circuit diagrams and check the tire pressure monitoring system rear left initiator circuit for short circuit to power
C1A61-14	Left Rear Initiator - Circuit short to ground or open	■ Tire pressure monitoring system rear left initiator circuit	■ Refer to the electrical circuit diagrams and check the tire pressure monitoring system rear left initiator circuit for short circuit to ground, open circuit, high resistance

		short circuit to ground, open circuit, high resistance	
C1A62-16	Right Rear Tire Pressure Sensor and Transmitter Assembly - Circuit voltage below threshold	■ Rear right tire pressure sensor internal battery voltage low	**NOTE:** This DTC is for event information only and does not indicate a fault. ■ No action required
C1A62-86	Right Rear Tire Pressure Sensor and Transmitter Assembly - Signal invalid	■ Rear right tire pressure sensor failure ■ Pressure, temperature or acceleration signal (s) out of range	**NOTE:** This DTC is for event information only and does not indicate a fault. ■ No action required
C1A62-93	Right Rear Tire Pressure Sensor and Transmitter Assembly - No operation	■ Rear right tire pressure sensor not installed ■ Rear right tire pressure sensor internal failure, tire pressure monitoring system RF receiver internal failure or interference	**NOTE:** Tire pressure sensor wheel position information may be incorrect if the wheels have been swapped during or after the failure event. ■ Check that a rear right tire pressure sensor is installed

			■ Using the manufacturer approved diagnostic system, perform routine - Tire Pressure Monitoring Tire Pressure Sensor Test. If fewer than 4 sensors fail, install new sensors as necessary. If all 4 sensors fail: ■ Check that the correct RF receiver is installed (by part number) ■ Review potential sources of electrical interference (power adaptors, laptop/navigation screens, etc)
C1A63-12	Right Rear Initiator - Circuit short to battery	■ Tire pressure monitoring system rear right initiator circuit short circuit to power	■ Refer to the electrical circuit diagrams and check the tire pressure monitoring system rear right initiator circuit for short circuit to power
C1A63-14	Right Rear Initiator - Circuit short to ground or open	■ Tire pressure monitoring system rear right initiator circuit short circuit to ground, open circuit, high resistance	■ Refer to the electrical circuit diagrams and check the tire pressure monitoring system rear right initiator circuit for short circuit to ground, open circuit, high resistance
C1D18-00	Wheel Localization Failed - No sub type information	■ Two or more tire pressure sensor faults ■ Two or more initiator faults ■ Two or more initiators incorrectly installed	△ **NOTE:** If additional tire pressure monitoring system related DTCs are also set, perform the relevant corrective action(s) first. ■ Refer to pinpoint test D in the tire pressure monitoring system diagnosis and testing section of the workshop manual (see section 204-04) and proceed as directed
C1D21-	Wheel Module -		△

05	System programming failures	■ Tire pressure sensor(s) removed ■ Incorrect tire pressure sensor(s) fitted (type, frequency, part number) ■ Tire pressure sensor(s) damaged ■ Tire pressure sensor RF receiver interference	**NOTE:** Tire pressure sensor wheel position information may be incorrect if the wheels have been swapped during or after the failure event. ■ Complete a visual inspection to ensure tire pressure sensors are fitted ■ Using the manufacturer approved diagnostic system check datalogger signal 0x4127 - Number of Tire pressure sensors failed ■ If all 4 sensors fail ■ Check that the RF receiver is correct part number ■ Review potential electrical interference to RF receiver, e.g. charging units, power adaptors, laptop/navigation screens, etc. ■ If 1-3 sensors fail ■ Identify faulty sensors by using the manufacturer approved diagnostic system and running application - Tire Pressure Monitoring Wheel Sensor Test ■ Replace faulty sensors
P0230-12	Fuel Pump Primary Circuit - Circuit short to battery	■ Circuit short circuit to power	■ Refer to the electrical circuit diagrams and check the circuit
U0001-88	High Speed CAN Communication Bus - Bus off	■ Bus off	■ Refer to the electrical circuit diagrams and check the power and ground connections to the module. Using the manufacturer approved diagnostic system, complete a CAN network integrity test. Refer to the electrical circuit diagrams and check the CAN network
U0004-	High Speed		

00	CAN Communication Bus (+) Low - No sub type information	■ High speed CAN communication Bus (+) short to ground	■ Refer to the electrical circuit diagrams and check the power and ground connections to the module. Using the manufacturer approved diagnostic system, complete a CAN network integrity test. Refer to the electrical circuit diagrams and check the CAN network
U0005-00	High Speed CAN Communication Bus (+) High - No sub type information	■ High speed CAN communication Bus (+) short to power	■ Refer to the electrical circuit diagrams and check the power and ground connections to the module. Using the manufacturer approved diagnostic system, complete a CAN network integrity test. Refer to the electrical circuit diagrams and check the CAN network
U0008-00	High Speed CAN Communication Bus (-) High - No sub type information	■ High speed CAN communication Bus (-) short to power	■ Refer to the electrical circuit diagrams and check the power and ground connections to the module. Using the manufacturer approved diagnostic system, complete a CAN network integrity test. Refer to the electrical circuit diagrams and check the CAN network
U0009-00	High Speed CAN Communication Bus (-) shorted to Bus (+) - No sub type information	■ High speed CAN communication Bus (-) shorted to (+)	■ Refer to the electrical circuit diagrams and check the power and ground connections to the module. Using the manufacturer approved diagnostic system, complete a CAN network integrity test. Refer to the electrical circuit diagrams and check the CAN network
U0010-88	Medium Speed CAN Communication Bus - Bus off	■ Bus off	■ Refer to the electrical circuit diagrams and check the power and ground connections to the module. Using the manufacturer approved diagnostic system, complete a CAN network integrity test. Refer to the electrical circuit diagrams and check the CAN network
U0013-00	Medium Speed CAN		■ Refer to the electrical circuit diagrams and check the power and ground connections to the module. Using the manufacturer approved

	Communication Bus (+) Low - No sub type information	■ Medium speed CAN communication Bus (+) short to ground	diagnostic system, complete a CAN network integrity test. Refer to the electrical circuit diagrams and check the CAN network
U0014-00	Medium Speed CAN Communication Bus (+) High - No sub type information	■ Medium speed CAN communication Bus (+) short to power	■ Refer to the electrical circuit diagrams and check the power and ground connections to the module. Using the manufacturer approved diagnostic system, complete a CAN network integrity test. Refer to the electrical circuit diagrams and check the CAN network
U0017-00	Medium Speed CAN Communication Bus (-) High - No sub type information	■ Medium speed CAN communication Bus (-) short to power	■ Refer to the electrical circuit diagrams and check the power and ground connections to the module. Using the manufacturer approved diagnostic system, complete a CAN network integrity test. Refer to the electrical circuit diagrams and check the CAN network
U0018-00	Medium Speed CAN Communication Bus (-) shorted to Bus (+) - No sub type information	■ Medium speed CAN communication Bus (-) shorted to (+)	■ Refer to the electrical circuit diagrams and check the power and ground connections to the module. Using the manufacturer approved diagnostic system, complete a CAN network integrity test. Refer to the electrical circuit diagrams and check the CAN network
U0100-00	Lost Communication With ECM/PCM "A" - No sub type information	■ No sub type information	■ Refer to the electrical circuit diagrams and check the power and ground connections to the module. Using the manufacturer approved diagnostic system, complete a CAN network integrity test. Refer to the electrical circuit diagrams and check the CAN network between the engine control module and central junction box
U0101-00	Lost Communication	■ No sub type information	■ Refer to the electrical circuit diagrams and check the power and ground connections to the module. Using the manufacturer approved

	With Transmission Control Module - No sub type information		diagnostic system, complete a CAN network integrity test. Refer to the electrical circuit diagrams and check the CAN network between the transmission control module and central junction box
U0102-00	Lost Communication With Transfer Case Control Module - No sub type information	■ No sub type information	■ Refer to the electrical circuit diagrams and check the power and ground connections to the module. Using the manufacturer approved diagnostic system, complete a CAN network integrity test. Refer to the electrical circuit diagrams and check the CAN network between the transfer case control module and central junction box
U0103-00	Lost Communication With Gear Shift Control Module A - No sub type information	■ Loss of CAN communications with transmission control switch	■ Refer to the electrical circuit diagrams and check the power and ground connections to the transmission control switch. Using the manufacturer approved diagnostic system, complete a CAN network integrity test. Refer to the electrical circuit diagrams and check the CAN network between the transmission control switch and the central junction box
U0121-00	Lost Communication With Anti-Lock Brake System (ABS) Control Module - No sub type information	■ No sub type information	■ Refer to the electrical circuit diagrams and check the power and ground connections to the module. Using the manufacturer approved diagnostic system, complete a CAN network integrity test. Refer to the electrical circuit diagrams and check the CAN network between the anti-lock braking system module and central junction box
U0126-00	Lost Communication With Steering Angle Sensor	■ No sub type information	■ Refer to the electrical circuit diagrams and check the power and ground connections to the module. Using the manufacturer approved diagnostic system, complete a CAN network integrity test. Refer to the electrical circuit diagrams and check the CAN network between the steering angle sensor module and central junction box

	Module - No sub type information		
U0128-00	Lost Communication With Park Brake Control Module - No sub type information	■ No sub type information	■ Refer to the electrical circuit diagrams and check the power and ground connections to the module. Using the manufacturer approved diagnostic system, complete a CAN network integrity test. Refer to the electrical circuit diagrams and check the CAN network between the electric park brake control module and central junction box
U0132-00	Lost Communication With Suspension Control Module "A" - No sub type information	■ No sub type information	■ Refer to the electrical circuit diagrams and check the power and ground connections to the module. Using the manufacturer approved diagnostic system, complete a CAN network integrity test. Refer to the electrical circuit diagrams and check the CAN network between the suspension control module and central junction box
U0138-00	Lost Communication with All Terrain Control Module - No sub type information	■ No sub type information	■ Refer to the electrical circuit diagrams and check the power and ground connections to the module. Using the manufacturer approved diagnostic system, complete a CAN network integrity test. Refer to the electrical circuit diagrams and check the CAN network between the terrain response switchpack and central junction box
U0139-00	Lost Communication With Suspension Control Module "B" - No sub type information	■ No sub type information	■ Refer to the electrical circuit diagrams and check the power and ground connections to the module. Using the manufacturer approved diagnostic system, complete a CAN network integrity test. Refer to the electrical circuit diagrams and check the CAN network between the suspension control module and central junction box
U0151-00	Lost Communication	■ No sub type information	■ Refer to the electrical circuit diagrams and check the power and ground connections to the module. Using the manufacturer approved

	With Restraints Control Module - No sub type information		diagnostic system, complete a CAN network integrity test. Refer to the electrical circuit diagrams and check the CAN network between the restraints control module and central junction box
U0155-00	Lost Communication With Instrument Panel Cluster (IPC) Control Module - No sub type information	■ No sub type information	■ Refer to the electrical circuit diagrams and check the power and ground connections to the module. Using the manufacturer approved diagnostic system, complete a CAN network integrity test. Refer to the electrical circuit diagrams and check the CAN network between the instrument cluster and central junction box
U0164-00	Lost Communication With HVAC Control Module - No sub type information	■ No sub type information	■ Refer to the electrical circuit diagrams and check the power and ground connections to the module. Using the manufacturer approved diagnostic system, complete a CAN network integrity test. Refer to the electrical circuit diagrams and check the CAN network between the automatic temperature control module and central junction box
U0184-00	Lost Communication With Radio - No sub type information	■ No sub type information	■ Refer to the electrical circuit diagrams and check the power and ground connections to the module. Using the manufacturer approved diagnostic system, complete a CAN network integrity test. Refer to the electrical circuit diagrams and check the CAN network between the radio control module and central junction box
U0199-00	Lost communication with Driver Door Module (DDM) - No sub type information	■ No sub type information	■ Refer to the electrical circuit diagrams and check the power and ground connections to the module. Using the manufacturer approved diagnostic system, complete a CAN network integrity test. Refer to the electrical circuit diagrams and check the CAN network between the driver door module and central junction box
U0200-	Lost		

00	Communication With "Door Control Module "B" - No sub type information	■ No sub type information	■ Refer to the electrical circuit diagrams and check the power and ground connections to the module. Using the manufacturer approved diagnostic system, complete a CAN network integrity test. Refer to the electrical circuit diagrams and check the CAN network between the passenger door module and central junction box
U0208-00	Lost Communication With "Seat Control Module "A" - No sub type information	■ No sub type information	■ Refer to the electrical circuit diagrams and check the power and ground connections to the module. Using the manufacturer approved diagnostic system, complete a CAN network integrity test. Refer to the electrical circuit diagrams and check the CAN network between the driver seat module and central junction box
U0214-00	Lost Communication With Remote Function Actuation - No sub type information	■ No sub type information	■ Refer to the electrical circuit diagrams and check the power and ground connections to the module. Using the manufacturer approved diagnostic system, complete a CAN network integrity test. Refer to the electrical circuit diagrams and check the CAN network between the keyless vehicle module and central junction box
U0241-00	Lost Communication With Headlamp Control Module "A" - No sub type information	■ No sub type information	■ Refer to the electrical circuit diagrams and check the power and ground connections to the module. Using the manufacturer approved diagnostic system, complete a CAN network integrity test. Refer to the electrical circuit diagrams and check the CAN network between the headlamp leveling control module and central junction box
U0242-00	Lost Communication With Headlamp Control Module "B" - No sub type information	■ No sub type information	■ Refer to the electrical circuit diagrams and check the power and ground connections to the module. Using the manufacturer approved diagnostic system, complete a CAN network integrity test. Refer to the electrical circuit diagrams and check the CAN network between the auto high beam control module and central junction box

U1000-00	Solid State Driver Protection Active - Driver Disabled - No sub type information	■ Central junction box output circuit - Short circuit to ground, short circuit to power	**NOTE:** The relevant output is disabled while this DTC is set. Do not clear the DTC until the fault has been rectified ■ Using the manufacturer approved diagnostic system, check for other central junction box short circuit to ground and/or short circuit to power DTCs and refer to the relevant DTC index for corrective actions ■ Once circuit faults have been rectified, clear DTC and retest
U200E-11	Control Module Output Power B - Circuit short to ground	■ Circuit short to ground	■ Refer to the electrical circuit diagrams and check the circuit, repair as necessary
U2010-11	Switch Illumination - Circuit short to ground	■ Switch illumination circuit short to ground	■ Refer to electrical circuit diagrams and check the switch illumination circuit
U2017-51	Control Module Software #2 - Not programmed	■ Not programmed	■ Configure the module using the manufacturers approved diagnostic system
U201B-54	Control Module Calibration Data #2 - Missing calibration	■ Missing calibration	■ Configure the module using the manufacturers approved diagnostic system by running the relevant configuration and set up application for calibrating the steering column
U201F-04	External Receiver - System internal	■ Tire pressure monitoring system RF receiver power or	**NOTE:**

	failures	ground circuit open circuit, high resistance ■ Tire pressure monitoring system RF receiver internal failure	Ignore all other tire pressure monitoring system related DTCs if this DTC is set. ■ Refer to the electrical circuit diagrams and check the tire pressure monitoring system RF receiver power and ground circuits for open circuit, high resistance ■ Using the manufacturer approved diagnostic system, clear the DTCs and retest. If the fault persists, install a new tire pressure monitoring system RF receiver
U201F-11	External Receiver - Circuit short to ground	■ Tire pressure monitoring system RF receiver LIN circuit short circuit to ground ■ Tire pressure monitoring system RF receiver internal failure ■ Central junction box internal failure	NOTE: Ignore all other tire pressure monitoring system related DTCs if this DTC is set. ■ Refer to pinpoint test A in the tire pressure monitoring system diagnosis and testing section of the workshop manual (see section 204-04) and proceed as directed
U201F-12	External Receiver - Circuit short to battery	■ Tire pressure monitoring system RF receiver LIN circuit short circuit to power ■ Tire pressure monitoring system RF receiver internal failure ■ Central junction box internal failure	NOTE: Ignore all other tire pressure monitoring system related DTCs if this DTC is set. ■ Refer to pinpoint test B in the tire pressure monitoring system diagnosis and testing section of the workshop manual (see section 204-04) and proceed as directed

U201F-87	External Receiver - Missing message	■ Tire pressure monitoring system RF receiver power or ground circuit open circuit, high resistance ■ Tire pressure monitoring system RF receiver LIN circuit open circuit, high resistance ■ Tire pressure monitoring system RF receiver internal failure ■ Central junction box internal failure	**NOTE:** Ignore all other tire pressure monitoring system related DTCs if this DTC is set. ■ Refer to pinpoint test C in the tire pressure monitoring system diagnosis and testing section of the workshop manual (see section 204-04) and proceed as directed
U2101-00	Control Module Configuration Incompatible - No sub type information	■ Car configuration file incorrect	■ Check and amend the car configuration file as required using the manufacturer approved diagnostic system
U2104-23	Trip Meter Reset Button - Signal stuck low	■ Signal stuck low ■ Switch activated for more than one minute ■ Switch failure	■ Check the operation of the switch. Refer to the electrical circuit diagrams and check the switch circuit. Clear the DTC and retest. If the DTC persists, renew the switch
U2300-64	Central Configuration -	■ Tire pressure monitoring system configuration data is invalid caused by	■ Using the manufacturer approved diagnostic system check and amend the car / local configuration file(s)

	Signal plausibility failure	incorrect car / local configuration file(s)	
U3000-49	Control Module - Internal electronic failure	■ Central junction box - Internal failure	**NOTE:** The relevant output is disabled while this DTC is set ■ Using the manufacturer approved diagnostic system, check for other central junction box short circuit to ground and/or short circuit to power DTCs and refer to the relevant DTC index for corrective actions ■ Install a new central junction box as required. Clear DTCs and retest
U3001-54	Control Module Improper Shutdown - Missing calibration	■ Missing calibration ■ EEPROM hasn't stored the final axis position of the steering column telescope/tilt position	■ Check for other steering column telescope/tilt DTCs. Clear the DTC and operate the steering column through the complete telescope and tilt functions ranges. If the DTC returns, configure the steering column module using the manufacturers approved diagnostic system by running the relevant configuration and set up application

2012.0 RANGE ROVER (LM), 100-00

GENERAL INFORMATION

DESCRIPTION AND OPERATION

CLIMATE CONTROL MODULE (HVAC)

CAUTION:

Diagnosis by substitution from a donor vehicle is **NOT** acceptable. Substitution of control modules does not guarantee confirmation of a fault, and may also cause additional faults in the vehicle being tested and/or the donor vehicle

NOTES:

- If the control module or a component is suspect and the vehicle remains under manufacturer warranty, refer to the warranty policy and procedures manual, or determine if any prior approval programme is in operation, prior to the installation of a new module/component
- Generic scan tools may not read the codes listed, or may read only 5-digit codes. Match the 5 digits from the scan tool to the first 5 digits of the 7-digit code listed to identify the fault (the last 2 digits give extra information read by the manufacturer-approved diagnostic system)
- When performing voltage or resistance tests, always use a digital multimeter accurate to three decimal places and with a current calibration certificate. When testing resistance, always take the resistance of the digital multimeter leads into account
- Check and rectify basic faults before beginning diagnostic routines involving pinpoint tests
- Inspect connectors for signs of water ingress, and pins for damage and/or corrosion
- If diagnostic trouble codes are recorded and, after performing the pinpoint tests, a fault is not present, an intermittent concern may be the cause. Always check for loose connections and corroded terminals
- Where an 'on demand self-test' is referred to, this can be accessed via the 'diagnostic trouble code monitor' tab on the manufacturers approved diagnostic system
- Check DDW for open campaigns. Refer to the corresponding bulletins and SSMs which may be valid for the specific customer complaint and carry out the recommendations as required

The table below lists all Diagnostic Trouble Codes (DTCs) that could be logged in the Climate Control Module, for additional Diagnosis and Testing information refer to the relevant Diagnosis and Testing Section. For additional information, refer to: Climate Control System (412-00 Climate Control System - General Information, Diagnosis and Testing).

DTC	DESCRIPTION	POSSIBLE CAUSES	ACTION
B1015-23	Screen On/Off Switch - Signal stuck low	■ Cannot switch touch screen On/Off; touch screen power button stuck in 'Pressed' position	■ Check the switch operation. Renew the Climate Control Module/switch pack
B102E-11	Air Quality Sensor - Circuit short to ground	■ Air quality sensor circuit short to ground	■ Refer to the electrical circuit diagrams and check the wiring circuit between the air quality sensors and the Climate Control Module
B102E-12	Air Quality Sensor - Circuit short to battery	■ Air quality sensor circuit short circuit to power	■ Refer to the electrical circuit diagrams and check the wiring circuit between the air quality sensors and the Climate Control Module
B1034-11	Left Front Seat Heater Element - Circuit short to ground	■ Left seat heater element short to ground	■ Refer to the electrical circuit diagrams and check the wiring circuit between the seat cushion heater and the Climate Control Module
B1034-15	Left Front Seat Heater Element	■ Left seat heater element	■ Refer to the electrical circuit diagrams and check the wiring circuit between the seat cushion heater and the Climate Control Module

	- Circuit short to battery or open	short to power or open circuit	
B1036-11	Right Front Seat Heater Element - Circuit short to ground	■ Right seat heater element short to ground	■ Refer to the electrical circuit diagrams and check the wiring circuit between the seat cushion heater and the Climate Control Module
B1036-15	Right Front Seat Heater Element - Circuit short to battery or open	■ Right seat heater element short to power or open circuit	■ Refer to the electrical circuit diagrams and check the wiring circuit between the seat cushion heater and the Climate Control Module
B1038-11	Left Front Seat Heater Sensor - Circuit short to ground	■ Left seat heater sensor short to ground	■ Refer to the electrical circuit diagrams and check the wiring circuit between the seat temp sensor and the Climate Control Module
B1038-15	Left Front Seat Heater Sensor - Circuit short to battery or open	■ Left seat heater sensor short to power or open circuit	■ Refer to the electrical circuit diagrams and check the wiring circuit between the seat temp sensor and the Climate Control Module
B103A-11	Right Front Seat Heater Sensor - Circuit short to ground	■ Right seat heater sensor short to ground	■ Refer to the electrical circuit diagrams and check the wiring circuit between the seat temp sensor and the Climate Control Module
B103A-15	Right Front Seat Heater	■ Right seat heater sensor short to power or open circuit	■ Refer to the electrical circuit diagrams and check the wiring circuit between the seat temp sensor and the Climate Control Module

	Sensor - Circuit short to battery or open		
B1083-11	Recirculation Damper Motor - Circuit short to ground	■ Recirculation actuator signal circuit short to ground	■ Refer to the electrical circuit diagrams and check the wiring circuit between the re-circulated air motor and the Climate Control Module
B1083-15	Recirculation Damper Motor - Circuit short to battery or open	■ Recirculation actuator signal circuit short to power or open circuit	■ Refer to the electrical circuit diagrams and check the wiring circuit between the re-circulated air motor and the Climate Control Module
B1085-1C	Defroster Damper Motor - Circuit voltage out of range	■ Motor voltage supply under /over limits	■ Refer to the electrical circuit diagrams and check the wiring circuit between the screen air distribution motor and the Climate Control Module
B1085-77	Defroster Damper Motor - Commanded position not reachable	■ Defroster actuator limited movement range compared to expected ■ Defrost vent /register blend door obstruction ■ Actuator fault	■ Clear the DTC and retest. If the problem persists, remove the defrost vent /register blend door actuator and check the blend flap operation. Renew the actuator

B1085-87	Defroster Damper Motor - Missing message	■ Missing response(s) from defrost actuator ■ Connector or harness related issue ■ Actuator fault	■ Check the defrost vent actuator connector for security and serviceability. Refer to the electrical circuit diagrams and check the wiring circuit between the screen air distribution motor and the Climate Control Module. Renew the actuator
B1085-98	Defroster Damper Motor - Component or system over temperature	■ Actuator internal coil temperature over limit ■ Actuator fault	■ Consider environmental conditions before condemning the actuator. Allow the actuator to cool, clear the DTC and retest. If the problem persists, renew the actuator
B1087-54	LIN Bus "A" - Missing calibration	■ Climate Control distribution flap actuator calibration routine has not been run successfully	■ Using the manufacturers approved diagnostic system, configure existing heating ventilation and air conditioning control module ■ Clear the DTC and retest ■ If the problem persists run, Actuator End Stop Detection routine
B1087-83	LIN Bus "A" - Value of signal protection calculation incorrect	■ Invalid LIN signal checksums on Climate Control LIN actuator Bus	■ Refer to the electrical circuit diagrams and check the Climate Control LIN circuits

B1087-86	LIN Bus "A" - Signal invalid	■ Invalid received signals on Climate Control LIN actuator Bus	■ Refer to the electrical circuit diagrams and check the Climate Control LIN circuits
B1087-88	LIN Bus "A" - Bus off	■ Climate Control actuator LIN Bus short to ground or power	■ Refer to the electrical circuit diagrams and check the Climate Control LIN circuits
B10B9-11	Blower Control - Circuit short to ground	■ Climate Control blower motor control output signal short to ground	■ Refer to the electrical circuit diagrams and check the blower motor control output circuit
B10B9-12	Blower Control - Circuit short to battery	■ Climate Control blower motor control output signal short to power	■ Refer to the electrical circuit diagrams and check the blower motor control output circuit
B11EE-11	A/C Compressor - Circuit short to ground	■ A/C compressor output signal short to ground	■ Refer to the electrical circuit diagrams and check the A/C compressor circuit
B11EE-12	A/C Compressor -	■ A/C compressor	■ Refer to the electrical circuit diagrams and check the A/C compressor circuit

	Circuit short to battery	output signal short to power	
B11EE-13	A/C Compressor - Circuit open	■ A/C compressor output signal open circuit	■ Refer to the electrical circuit diagrams and check the A/C compressor circuit
B11FF-11	A/C Refrigerant Pressure - Circuit short to ground	■ A/C pressure sensor input signal short to ground	■ Refer to the electrical circuit diagrams and check the wiring circuit between the refrigerant pressure sensor and the Climate Control Module
B11FF-15	A/C Refrigerant Pressure - Circuit short to battery or open	■ A/C pressure sensor input signal short to power or open circuit	■ Refer to the electrical circuit diagrams and check the wiring circuit between the refrigerant pressure sensor and the Climate Control Module
B11FF-84	A/C Refrigerant Pressure - Signal below allowable range	■ A/C high pressure below low threshold ■ A/C system leak ■ Incorrect A/C system charge ■ Pressure sensor fault	■ Check for other A/C system DTCs. Check the A/C system operating pressures and gas charge. Renew the pressure sensor
B11FF-	A/C Refrigerant		

85	Pressure - Signal above allowable range	■ A/C high pressure above high threshold ■ Incorrect A/C system charge ■ Pressure sensor fault	■ Check the A/C system operating pressures and gas charge. Renew the pressure sensor
B123D-11	Dynamic Stability Control Button - Circuit short to ground	■ Dynamic Stability Control switch output signal short to ground	■ Refer to the electrical circuit diagrams and check the wiring circuit between the Dynamic Stability Control switch and the Climate Control Module
B123D-12	Dynamic Stability Control Button - Circuit short to battery	■ Dynamic Stability Control switch output signal short to power	■ Refer to the electrical circuit diagrams and check the wiring circuit between the Dynamic Stability Control switch and the Climate Control Module
B123D-13	Dynamic Stability Control Button - Circuit open	■ Dynamic Stability Control switch output signal circuit open circuit	■ Refer to the electrical circuit diagrams and check the wiring circuit between the Dynamic Stability Control switch and the Climate Control Module
B12A6-11	Auxiliary Heater Water Pump - Circuit short to ground	■ Fuel fired booster heater coolant pump	NOTE:

		circuit short circuit to ground	The fuel fired booster heater assembly contains many serviceable components. It should NOT be necessary to replace the entire fuel fired booster heater unit to rectify this fault ■ Refer to the electrical circuit diagrams and check the fuel fired booster heater coolant pump circuit for short circuit to ground ■ Repair the circuit or install a new coolant pump located within the fuel fired booster heater as necessary. Using the manufacturer approved diagnostic system, clear the DTCs and perform routine - Auxiliary Heater (AHCM) Activation Test (0x900A). This will operate the fuel fired booster heater for 15 minutes. Note that the routine should be started only when the engine is cool. The routine should be performed with the engine running and with the climate controls set to maximum heat and maximum fan. Repeat the routine again if smoke continues to be visible from the fuel fired booster heater exhaust pipe or from the area surrounding the fuel fired booster heater
B12A6-15	Auxiliary Heater Water Pump - Circuit short to battery or open	■ Fuel fired booster heater coolant pump circuit short circuit to power, open circuit, high resistance	NOTE: The fuel fired booster heater assembly contains many serviceable components. It should NOT be necessary to replace the entire fuel fired booster heater unit to rectify this fault ■ Refer to the electrical circuit diagrams and check the fuel fired booster heater coolant pump circuit for short circuit to power, open circuit, high resistance ■ Repair the circuit or install a new coolant pump located within the fuel fired booster heater as necessary. Using the manufacturer approved diagnostic system, clear the DTCs and perform routine - Auxiliary Heater (AHCM) Activation Test (0x900A). This will operate the fuel fired booster heater for 15 minutes. Note that the routine should be started only when the engine is cool. The routine should be performed with the engine running and with the

			climate controls set to maximum heat and maximum fan. Repeat the routine again if smoke continues to be visible from the fuel fired booster heater exhaust pipe or from the area surrounding the fuel fired booster heater
B12AD-11	Left Heat Exchanger Temperature Sensor - Circuit short to ground	■ Left heater coolant temperature sensor short to ground ■ Sensor fault	■ Refer to the electrical circuit diagrams and check the circuit between the left heater coolant temperature sensor and the Climate Control Module. Renew the sensor
B12AD-15	Left Heat Exchanger Temperature Sensor - Circuit short to battery or open	■ Left heater coolant temperature sensor short to power or open circuit ■ Sensor fault	■ Refer to the electrical circuit diagrams and check the circuit between the left heater coolant temperature sensor and the Climate Control Module. Renew the sensor
B12AE-11	Right Heat Exchanger Temperature Sensor - Circuit short to ground	■ Right heater coolant temperature sensor short to ground ■ Sensor fault	■ Refer to the electrical circuit diagrams and check the circuit between the right heater coolant temperature sensor and the Climate Control Module. Renew the sensor
B12AE-15	Right Heat Exchanger Temperature	■ Right heater coolant temperature	■ Refer to the electrical circuit diagrams and check the circuit between the right heater coolant temperature sensor and the Climate Control Module. Renew the sensor

	Sensor - Circuit short to battery or open	sensor short to power or open circuit ■ Sensor fault	
B12AF-11	Left Coolant Control Valve - Circuit short to ground	■ Left coolant control valve output signal short to ground ■ Coolant control valve fault	■ Refer to the electrical circuit diagrams and check the circuit between the left water valve and the Climate Control Module. Renew the coolant valve
B12AF-12	Left Coolant Control Valve - Circuit short to battery	■ Left coolant control valve output signal short to power ■ Coolant control valve fault	■ Refer to the electrical circuit diagrams and check the circuit between the left water valve and the Climate Control Module. Renew the coolant valve
B12AF-13	Left Coolant Control Valve - Circuit open	■ Left coolant control valve open circuit ■ Coolant control valve fault	■ Refer to the electrical circuit diagrams and check the circuit between the left water valve and the Climate Control Module. Renew the coolant valve
B12BF-11	Right Coolant Control Valve - Circuit short to ground	■ Right coolant control valve output signal short to ground	■ Refer to the electrical circuit diagrams and check the circuit between the right water valve and the Climate Control Module. Renew the coolant valve

		■ Coolant control valve fault	
B12BF-12	Right Coolant Control Valve - Circuit short to battery	■ Right coolant control valve output signal short to power ■ Coolant control valve fault	■ Refer to the electrical circuit diagrams and check the circuit between the right water valve and the Climate Control Module. Renew the coolant valve
B12BF-13	Right Coolant Control Valve - Circuit open	■ Right coolant control valve open circuit ■ Coolant control valve fault	■ Refer to the electrical circuit diagrams and check the circuit between the right water valve and the Climate Control Module. Renew the coolant valve
B12B1-11	Heated Washer Jet and Wiper Park Relay - Circuit short to ground	■ Heated washer jet output short to ground ■ Relay fault	■ Refer to the electrical circuit diagrams and check the circuit between the washer jet relay and the Climate Control Module. Renew the relay
B12B1-12	Heated Washer Jet and Wiper Park Relay - Circuit short to battery	■ Heated washer jet output short to power ■ Relay fault	■ Refer to the electrical circuit diagrams and check the circuit between the washer jet relay and the Climate Control Module. Renew the relay
B12B1-13	Heated Washer Jet and Wiper Park Relay -	■ Heated washer jet output open circuit	■ Refer to the electrical circuit diagrams and check the circuit between the washer jet relay and the Climate Control Module. Renew the relay

	Circuit open	■ Relay fault	
B12B2-11	AUX Heater Coolant Diverter Valve - Circuit short to ground	■ Fuel fired booster heater engine coolant bypass valve circuit short circuit to ground	**NOTE:** The fuel fired booster heater assembly contains many serviceable components. It should NOT be necessary to replace the entire fuel fired booster heater unit to rectify this fault ■ Refer to the electrical circuit diagrams and check the fuel fired booster heater engine coolant bypass valve circuit for short circuit to ground ■ Repair the circuit or install a new engine coolant bypass valve located within the fuel fired booster heater as necessary. Using the manufacturer approved diagnostic system, clear the DTCs and perform routine - Auxiliary Heater (AHCM) Activation Test (0x900A). This will operate the fuel fired booster heater for 15 minutes. Note that the routine should be started only when the engine is cool. The routine should be performed with the engine running and with the climate controls set to maximum heat and maximum fan. Repeat the routine again if smoke continues to be visible from the fuel fired booster heater exhaust pipe or from the area surrounding the fuel fired booster heater
B12B2-12	AUX Heater Coolant Diverter Valve - Circuit short to battery	■ Fuel fired booster heater engine coolant bypass valve circuit short circuit to power	**NOTE:** The fuel fired booster heater assembly contains many serviceable components. It should NOT be necessary to replace the entire fuel fired booster heater unit to rectify this fault ■ Refer to the electrical circuit diagrams and check the fuel fired booster heater engine coolant bypass valve circuit for short circuit to power

			■ Repair the circuit or install a new engine coolant bypass valve located within the fuel fired booster heater as necessary. Using the manufacturer approved diagnostic system, clear the DTCs and perform routine - Auxiliary Heater (AHCM) Activation Test (0x900A). This will operate the fuel fired booster heater for 15 minutes. Note that the routine should be started only when the engine is cool. The routine should be performed with the engine running and with the climate controls set to maximum heat and maximum fan. Repeat the routine again if smoke continues to be visible from the fuel fired booster heater exhaust pipe or from the area surrounding the fuel fired booster heater
B12B2-13	AUX Heater Coolant Diverter Valve - Circuit open	■ Fuel fired booster heater engine coolant bypass valve circuit open circuit, high resistance	**NOTE:** The fuel fired booster heater assembly contains many serviceable components. It should NOT be necessary to replace the entire fuel fired booster heater unit to rectify this fault ■ Refer to the electrical circuit diagrams and check the fuel fired booster heater engine coolant bypass valve circuit for open circuit, high resistance ■ Repair the circuit or install a new engine coolant bypass valve located within the fuel fired booster heater as necessary. Using the manufacturer approved diagnostic system, clear the DTCs and perform routine - Auxiliary Heater (AHCM) Activation Test (0x900A). This will operate the fuel fired booster heater for 15 minutes. Note that the routine should be started only when the engine is cool. The routine should be performed with the engine running and with the climate controls set to maximum heat and maximum fan. Repeat the routine again if smoke continues to be visible from the fuel fired booster heater exhaust pipe or from the area surrounding the fuel fired booster heater
B12B3-11	Air Quality Sensor Heater	■ Air quality sensor heater	■ Refer to the electrical circuit diagrams and check the air quality sensor heater power circuit between the sensor and the Climate Control Module

	Supply - Circuit short to ground	power supply circuit short to ground	
B12B3-12	Air Quality Sensor Heater Supply - Circuit short to battery	■ Air quality sensor heater power supply circuit short to power	■ Refer to the electrical circuit diagrams and check the air quality sensor heater power circuit between the sensor and the Climate Control Module
B12B3-13	Air Quality Sensor Heater Supply - Circuit open	■ Air quality sensor heater power supply circuit open circuit	■ Refer to the electrical circuit diagrams and check the air quality sensor heater power circuit between the sensor and the Climate Control Module
B12B9-16	Auxiliary Heater Control Module - Circuit voltage below threshold	■ Fuel fired booster heater power or ground circuit open circuit, high resistance ■ Battery /charging system fault ■ Fuel fired booster heater control module internal failure	■ Refer to the electrical circuit diagrams and check the fuel fired booster heater power and ground circuits for open circuit, high resistance ■ Refer to the relevant section of the workshop manual and test the battery and charging system ■ Using the manufacturer approved diagnostic system, clear the DTCs and perform routine - Auxiliary Heater (AHCM) Activation Test (0x900A). This will operate the fuel fired booster heater for 15 minutes. Note that the routine should be started only when the engine is cool. The routine should be performed with the engine running and with the climate controls set to maximum heat and maximum fan. Repeat the routine again if smoke continues to be visible from the fuel fired booster heater exhaust pipe or from the area surrounding the fuel fired booster heater ■ If the fault persists, install a new fuel fired booster heater, clear the DTCs and perform routine - Auxiliary Heater (AHCM) Activation Test (0x900A)

B12B9-17	Auxiliary Heater Control Module - Circuit voltage above threshold	■ Battery /charging system fault ■ Fuel fired booster heater control module internal failure	■ Refer to the relevant section of the workshop manual and test the battery and charging system ■ Using the manufacturer approved diagnostic system, clear the DTCs and perform routine - Auxiliary Heater (AHCM) Activation Test (0x900A). This will operate the fuel fired booster heater for 15 minutes. Note that the routine should be started only when the engine is cool. The routine should be performed with the engine running and with the climate controls set to maximum heat and maximum fan. Repeat the routine again if smoke continues to be visible from the fuel fired booster heater exhaust pipe or from the area surrounding the fuel fired booster heater ■ If the fault persists, install a new fuel fired booster heater, clear the DTCs and perform routine - Auxiliary Heater (AHCM) Activation Test (0x900A)
B12B9-43	Auxiliary Heater Control Module - Special memory failure	■ Fuel fired booster heater control module internal microcontroller ROM/RAM corruption	■ Refer to the relevant section of the workshop manual and test the battery and charging system ■ Using the manufacturer approved diagnostic system, clear the DTCs and perform routine - Auxiliary Heater (AHCM) Activation Test (0x900A). This will operate the fuel fired booster heater for 15 minutes. Note that the routine should be started only when the engine is cool. The routine should be performed with the engine running and with the climate controls set to maximum heat and maximum fan. Repeat the routine again if smoke continues to be visible from the fuel fired booster heater exhaust pipe or from the area surrounding the fuel fired booster heater ■ If the fault persists, install a new fuel fired booster heater, clear the DTCs and perform routine - Auxiliary Heater (AHCM) Activation Test (0x900A)
B12B9-49	Auxiliary Heater Control Module - Internal electronic failure	■ Fuel fired booster heater control module internal failure	■ Using the manufacturer approved diagnostic system, clear the DTCs and perform routine - Auxiliary Heater (AHCM) Activation Test (0x900A). This will operate the fuel fired booster heater for 15 minutes. Note that the routine should be started only when the engine is cool. The routine should be performed with the engine running and with the climate controls set to maximum heat and maximum fan. Repeat the routine again if smoke

			continues to be visible from the fuel fired booster heater exhaust pipe or from the area surrounding the fuel fired booster heater ■ If the fault persists, install a new fuel fired booster heater, clear the DTCs and perform routine - Auxiliary Heater (AHCM) Activation Test (0x900A)
B12CF-1C	Face Damper Motor - Circuit voltage out of range	■ Face air distribution actuator voltage supply under/over limits ■ Face air distribution motor circuit fault ■ Battery charge state ■ Charging system fault	■ Refer to the electrical circuit diagrams and check the face air distribution motor circuit. Check for charging system DTCs. Check the battery charge condition and charging system voltage output
B12CF-77	Face Damper Motor - Commanded position not reachable	■ Face air distribution actuator limited movement range compared to expected ■ Face air distribution	■ Check the face air distribution mechanism for obstructions. Clear DTC and retest. If the problem persists, renew the Climate Control Module. Refer to the warranty policies and procedures before renewing a module

		flap obstruction or damage	
B12CF-87	Face Damper Motor - Missing message	■ One or more missing response(s) from face air distribution actuator ■ Face air distribution circuit fault ■ Actuator fault	■ Check the face air distribution mechanism for obstructions
B12CF-98	Face Damper Motor - Component or system over temperature	■ Face air distribution mode actuator internal coil temperature over limit ■ Actuator fault	■ Consider environmental conditions before condemning the actuator. Allow the actuator to cool, clear the DTC and retest. If the problem persists, renew the actuator.
B12D0-1C	Foot Damper Motor - Circuit voltage out of range	■ Foot air distribution actuator voltage supply under/over limits	■ Refer to the electrical circuit diagrams and check the foot air distribution motor circuit. Check for charging system DTCs. Check the battery charge condition and charging system voltage output

		■ Foot air distribution motor circuit fault ■ Battery charge state ■ Charging system fault	
B12D0-77	Foot Damper Motor - Commanded position not reachable	■ Foot air distribution actuator limited movement range compared to expected ■ Foot air distribution flap obstruction or damage	■ Check the foot air distribution mechanism for obstructions. Clear DTC and retest. If the problem persists, renew the Climate Control Module. Refer to the warranty policies and procedures before renewing a module
B12D0-87	Foot Damper Motor - Missing message	■ One or more missing response(s) from foot air distribution actuator ■ Foot air distribution circuit fault	■ Check the foot air distribution mechanism for obstructions

		■ Actuator fault	
B12D0-98	Foot Damper Motor - Component or system over temperature	■ Foot air distribution mode actuator internal coil temperature over limit ■ Actuator fault	■ Consider environmental conditions before condemning the actuator. Allow the actuator to cool, clear the DTC and retest. If the problem persists, renew the actuator.
B12D1-1C	Dynamic Air Pressure Damper Motor - Circuit voltage out of range	■ Incoming airflow actuator voltage supply under/over limits ■ Incoming airflow motor circuit fault ■ Battery charge state ■ Charging system fault	■ Refer to the electrical circuit diagrams and check the incoming airflow motor circuit. Check for charging system DTCs. Check the battery charge condition and charging system voltage output
B12D1-77	Dynamic Air Pressure Damper Motor - Commanded position not reachable	■ Incoming airflow actuator limited movement range compared to expected	■ Check the incoming airflow distribution mechanism for obstructions. Clear DTC and retest. If the problem persists, renew the Climate Control Module. Refer to the warranty policies and procedures before renewing a module

		■ Foot air distribution flap obstruction or damage	
B12D1-87	Dynamic Air Pressure Damper Motor - Missing message	■ One or more missing response(s) from incoming airflow actuator ■ Incoming airflow distribution circuit fault ■ Actuator fault	■ Check the incoming airflow distribution mechanism for obstructions
B12D1-98	Dynamic Air Pressure Damper Motor - Component or system over temperature	■ Incoming airflow distribution mode actuator internal coil temperature over limit ■ Actuator fault	■ Consider environmental conditions before condemning the actuator. Allow the actuator to cool, clear the DTC and retest. If the problem persists, renew the actuator.
B12D2-11	Screen On/Off LED - Circuit short to ground	■ Infotainment LED output short to ground (LED not working)	■ Refer to the electrical circuit diagrams and check the On/Off tell tail circuit between the Climate Control Module and the touch screen.

B12D2-12	Screen On/Off LED - Circuit short to battery	■ Infotainment LED output short to power (LED permanently on)	■ Refer to the electrical circuit diagrams and check the On/Off tell tail circuit between the Climate Control Module and the touch screen.
B1A59-11	Sensor 5 Volt Supply - Circuit short to ground	■ 5 volt supply short circuit to ground	**NOTE:** This supply voltage feeds multiple circuits ■ Refer to the electrical circuit diagrams and check circuits - C1629-2 - C1629-3 - C1629- 4 - C0923-17 - for circuit short to ground
B1A59-12	Sensor 5 Volt Supply - Circuit short to battery	■ 5 volt supply short circuit to power	**NOTE:** This supply voltage feeds multiple circuits ■ Refer to the electrical circuit diagrams and check circuits - C1629-2 - C1629-3 - C1629- 4 - C0923-17 - for circuit short to power
B1A61-07	Cabin Temperature Sensor - Mechanical Failures	■ In vehicle temperature sensor fan motor failure	■ Sensor is an internal part of the control module. Refer to the warranty policies and procedures before renewing the module/unit
B1A61-	Cabin		

49	Temperature Sensor - Internal electronic failure	■ In vehicle temperature sensor/motor failure	■ Sensor is an internal part of the control module. Refer to the warranty policies and procedures before renewing the module/unit
B1A63-12	Right Solar Sensor - Circuit short to battery	■ Right solar sensor input short circuit to power	■ Refer to the electrical circuit diagrams and check the sunlight sensor circuit between the Climate Control Module and the sensor. Renew the sensor
B1A63-14	Right Solar Sensor - Circuit short to ground or open	■ Right solar sensor input short circuit to ground or open	■ Refer to the electrical circuit diagrams and check the sunlight sensor circuit between the Climate Control Module and the sensor. Renew the sensor
B1A64-12	Left Solar Sensor - Circuit short to battery	■ Left solar sensor input short circuit to power	■ Refer to the electrical circuit diagrams and check the sunlight sensor circuit between the Climate Control Module and the sensor. Renew the sensor
B1A64-14	Left Solar Sensor - Circuit short to ground or open	■ Left solar sensor input short circuit to ground or open	■ Refer to the electrical circuit diagrams and check the sunlight sensor circuit between the Climate Control Module and the sensor. Renew the sensor
B1B71-11	Evaporator Temperature Sensor - Circuit short to ground	■ Evaporator sensor input signal short to ground	■ Refer to the electrical circuit diagrams and check the evaporator sensor circuit. Renew the sensor

B1B71-15	Evaporator Temperature Sensor - Circuit short to battery or open	■ Evaporator sensor input signal short to power	■ Refer to the electrical circuit diagrams and check the evaporator sensor circuit. Renew the sensor
B1B72-12	LIN Bus #1 Power Supply Circuit - Circuit short to battery	■ LIN BUS power supply circuit short circuit to power	■ Check the LIN circuits. Refer to the electrical circuit diagrams
B1B72-14	LIN Bus #1 Power Supply Circuit - Circuit short to ground or open	■ LIN BUS power supply circuit short circuit to ground or open circuit	■ Check the LIN circuits. Refer to the electrical circuit diagrams
B1C30-11	Disable Switch - Park Aid - Circuit short to ground	■ Cannot disable parking distance Control ■ Parking distance Control output signal short to ground	■ Refer to the electrical circuit diagrams and check the output circuit from the Climate Control unit to the parking distance Control module
B1C30-12	Disable Switch - Park Aid - Circuit short to battery	■ Cannot disable parking distance Control ■ Parking distance	■ Refer to the electrical circuit diagrams and check the output circuit from the Climate Control unit to the parking distance Control module

		Control output signal short to power	
B1C30-13	Disable Switch - Park Aid - Circuit open	■ Cannot disable parking distance Control ■ Parking distance Control output signal open circuit	■ Refer to the electrical circuit diagrams and check the output circuit from the Climate Control unit to the parking distance Control module
B1D22-11	Coolant Temperature Sensor - Circuit short to ground	■ Fuel fired booster heater coolant temperature sensor circuit short circuit to ground	**NOTE:** The fuel fired booster heater assembly contains many serviceable components. It should NOT be necessary to replace the entire fuel fired booster heater unit to rectify this fault ■ Refer to the electrical circuit diagrams and check the fuel fired booster heater coolant temperature sensor circuit for short circuit to ground. Repair the circuit or install a new coolant temperature sensor located within the fuel fired booster heater as necessary. Using the manufacturer approved diagnostic system, clear the DTCs and perform routine - Auxiliary Heater (AHCM) Activation Test (0x900A). This will operate the fuel fired booster heater for 15 minutes. Note that the routine should be started only when the engine is cool. The routine should be performed with the engine running and with the climate controls set to maximum heat and maximum fan. Repeat the routine again if smoke continues to be visible from the fuel fired booster heater exhaust pipe or from the area surrounding the fuel fired booster heater

B1D22-15	Coolant Temperature Sensor - Circuit short to battery or open	■ Fuel fired booster heater coolant temperature sensor circuit short circuit to power, open circuit, high resistance	**NOTE:** The fuel fired booster heater assembly contains many serviceable components. It should NOT be necessary to replace the entire fuel fired booster heater unit to rectify this fault ■ Refer to the electrical circuit diagrams and check the fuel fired booster heater coolant temperature sensor circuit for short circuit to power, open circuit, high resistance. Repair the circuit or install a new coolant temperature sensor located within the fuel fired booster heater as necessary. Using the manufacturer approved diagnostic system, clear the DTCs and perform routine - Auxiliary Heater (AHCM) Activation Test (0x900A). This will operate the fuel fired booster heater for 15 minutes. Note that the routine should be started only when the engine is cool. The routine should be performed with the engine running and with the climate controls set to maximum heat and maximum fan. Repeat the routine again if smoke continues to be visible from the fuel fired booster heater exhaust pipe or from the area surrounding the fuel fired booster heater
B1D23-64	Overheat Sensor - Signal plausibility failure	■ Fuel fired booster heater internal failure	**NOTE:** Consider whether environmental conditions may have caused this DTC to log before condemning the unit ■ Using the manufacturer approved diagnostic system, clear the DTCs and retest. If the fault persists, install a new fuel fired booster heater, clear the DTCs and perform routine - Auxiliary Heater (AHCM) Activation Test (0x900A)
B1D24-	Glow Plug -		

11	Circuit short to ground	■ Fuel fired booster heater glow plug circuit short circuit to ground	**NOTE:** The fuel fired booster heater assembly contains many serviceable components. It should NOT be necessary to replace the entire fuel fired booster heater unit to rectify this fault ■ Refer to the electrical circuit diagrams and check the fuel fired booster heater glow plug circuit for short circuit to ground. Repair the circuit or install a new glow plug located within the fuel fired booster heater as necessary. Using the manufacturer approved diagnostic system, clear the DTCs and perform routine - Auxiliary Heater (AHCM) Activation Test (0x900A). This will operate the fuel fired booster heater for 15 minutes. Note that the routine should be started only when the engine is cool. The routine should be performed with the engine running and with the climate controls set to maximum heat and maximum fan. Repeat the routine again if smoke continues to be visible from the fuel fired booster heater exhaust pipe or from the area surrounding the fuel fired booster heater
B1D24-15	Glow Plug - Circuit short to battery or open	■ Fuel fired booster heater glow plug circuit short circuit to power, open circuit, high resistance	**NOTE:** The fuel fired booster heater assembly contains many serviceable components. It should NOT be necessary to replace the entire fuel fired booster heater unit to rectify this fault ■ Refer to the electrical circuit diagrams and check the fuel fired booster heater glow plug circuit for short circuit to power, open circuit, high resistance. Repair the circuit or install a new glow plug located within the fuel fired booster heater as necessary. Using the manufacturer approved diagnostic system, clear the DTCs and perform routine - Auxiliary Heater (AHCM) Activation Test (0x900A). This will operate the fuel fired booster heater for 15 minutes. Note that the routine should be started only when the

			engine is cool. The routine should be performed with the engine running and with the climate controls set to maximum heat and maximum fan. Repeat the routine again if smoke continues to be visible from the fuel fired booster heater exhaust pipe or from the area surrounding the fuel fired booster heater
B1D24-64	Glow Plug - Signal plausibility failure	■ Fuel fired booster heater glow plug failure	**NOTES:** ■ The fuel fired booster heater assembly contains many serviceable components. It should NOT be necessary to replace the entire fuel fired booster heater unit to rectify this fault ■ This DTC is set when a flame is detected before combustion is activated. ■ Using the manufacturer approved diagnostic system, clear the DTCs and perform routine - Auxiliary Heater (AHCM) Activation Test (0x900A). This will operate the fuel fired booster heater for 15 minutes. Note that the routine should be started only when the engine is cool. The routine should be performed with the engine running and with the climate controls set to maximum heat and maximum fan. Repeat the routine again if smoke continues to be visible from the fuel fired booster heater exhaust pipe or from the area surrounding the fuel fired booster heater. If the fault persists, install a new glow plug located within the fuel fired booster heater and re-test. If the fault persists, install a new fuel fired booster heater control module located within the fuel fired booster heater, clear the DTCs and perform routine - Auxiliary Heater (AHCM) Activation Test (0x900A)
B1D25-11	Heater Fuel Pump - Circuit short to ground	■ Fuel fired booster heater fuel pump	■ Refer to the electrical circuit diagrams and check the fuel fired booster heater fuel pump circuit for short circuit to ground. Repair the circuit or install a new fuel fired booster heater fuel pump as necessary. Using the manufacturer approved diagnostic system, clear the DTCs and perform routine - Auxiliary Heater (AHCM) Activation Test (0x900A). This will operate

		circuit short circuit to ground	the fuel fired booster heater for 15 minutes. Note that the routine should be started only when the engine is cool. The routine should be performed with the engine running and with the climate controls set to maximum heat and maximum fan. Repeat the routine again if smoke continues to be visible from the fuel fired booster heater exhaust pipe or from the area surrounding the fuel fired booster heater
B1D25-15	Heater Fuel Pump - Circuit short to battery or open	■ Fuel fired booster heater fuel pump circuit short circuit to power, open circuit, high resistance	■ Refer to the electrical circuit diagrams and check the fuel fired booster heater fuel pump circuit for short circuit to power, open circuit, high resistance. Repair the circuit or install a new fuel fired booster heater fuel pump as necessary. Using the manufacturer approved diagnostic system, clear the DTCs and perform routine - Auxiliary Heater (AHCM) Activation Test (0x900A). This will operate the fuel fired booster heater for 15 minutes. Note that the routine should be started only when the engine is cool. The routine should be performed with the engine running and with the climate controls set to maximum heat and maximum fan. Repeat the routine again if smoke continues to be visible from the fuel fired booster heater exhaust pipe or from the area surrounding the fuel fired booster heater
B1D26-11	Combustion Air Blower - Circuit short to ground	■ Fuel fired booster heater blower contaminated with water or debris ingress following driving through deep water or extreme off-road driving ■ Fuel fired booster heater	**NOTE:** The fuel fired booster heater assembly contains many serviceable components. It should NOT be necessary to replace the entire fuel fired booster heater unit to rectify this fault ■ Check the fuel fired booster heater air intake and the fuel fired booster heater blower for signs of restriction from sediment or debris. Remove any foreign matter from the air intake and blower assembly. Clear DTC and retest ■ If fault persists, refer to the electrical circuit diagrams and check the fuel fired booster heater blower circuit for short circuit to ground. Repair the circuit or install a new blower located within the fuel fired booster heater as necessary. Using the manufacturer approved diagnostic system, clear the

			blower circuit short circuit to ground ■ Fuel fired booster heater evaporator assembly contaminated with water or debris ingress following driving through deep water or extreme off-road driving	DTCs and perform routine - Auxiliary Heater (AHCM) Activation Test (0x900A). This will operate the fuel fired booster heater for 15 minutes. Note that the routine should be started only when the engine is cool. The routine should be performed with the engine running and with the climate controls set to maximum heat and maximum fan. Repeat the routine again if smoke continues to be visible from the fuel fired booster heater exhaust pipe or from the area surrounding the fuel fired booster heater ■ If the fuel fired booster heater does not operate correctly following replacement of the blower located within the fuel fired booster heater, replace the fuel fired booster heater combustion tube and evaporator assembly, clear the DTCs and perform routine - Auxiliary Heater (AHCM) Activation Test (0x900A)
B1D26-15	Combustion Air Blower - Circuit short to battery or open	■ Fuel fired booster heater blower contaminated with water or debris ingress following driving through deep water or extreme off-road driving ■ Fuel fired booster heater blower circuit short circuit to power, open circuit, high resistance	**NOTE:** The fuel fired booster heater assembly contains many serviceable components. It should NOT be necessary to replace the entire fuel fired booster heater unit to rectify this fault ■ Check the fuel fired booster heater air intake and the fuel fired booster heater blower for signs of restriction from sediment or debris. Remove any foreign matter from the air intake and blower assembly. Clear DTC and retest ■ If fault persists, refer to the electrical circuit diagrams and check the fuel fired booster heater blower circuit for short circuit to power, open circuit, high resistance. Repair the circuit or install a new blower located within the fuel fired booster heater as necessary. Using the manufacturer approved diagnostic system, clear the DTCs and perform routine - Auxiliary Heater (AHCM) Activation Test (0x900A). This will operate the fuel fired booster heater for 15 minutes. Note that the routine should be started only when the

		■ Fuel fired booster heater evaporator assembly contaminated with water or debris ingress following driving through deep water or extreme off-road driving	engine is cool. The routine should be performed with the engine running and with the climate controls set to maximum heat and maximum fan. Repeat the routine again if smoke continues to be visible from the fuel fired booster heater exhaust pipe or from the area surrounding the fuel fired booster heater ■ If the fuel fired booster heater does not operate correctly following replacement of the blower located within the fuel fired booster heater, replace the fuel fired booster heater combustion tube and evaporator assembly, clear the DTCs and perform routine - Auxiliary Heater (AHCM) Activation Test (0x900A)
B1D27-11	Heater Coolant Pump - Circuit short to ground	■ Auxiliary coolant pump circuit short circuit to ground ■ Pump failure	**NOTE:** The fuel fired booster heater assembly contains many serviceable components. It should NOT be necessary to replace the entire fuel fired booster heater unit to rectify this fault ■ Refer to the electrical circuit diagrams and check the auxiliary coolant pump circuit for short circuit to ground. Repair circuit as required, clear DTC and retest ■ If fault persists, check and install a new coolant pump located within the fuel fired booster heater as required. Clear DTC and retest
B1D27-15	Heater Coolant Pump - Circuit short to battery or open	■ Auxiliary coolant pump circuit short circuit to power, open circuit, high resistance	**NOTE:** The fuel fired booster heater assembly contains many serviceable components. It should NOT be necessary to replace the entire fuel fired booster heater unit to rectify this fault

		■ Pump failure	■ Refer to the electrical circuit diagrams and check the auxiliary coolant pump circuit for short circuit to power, open circuit, high resistance. Repair circuit as required, clear DTC and retest ■ If fault persists, check and install a new coolant pump located within the fuel fired booster heater as required. Clear DTC and retest
B1D29-00	No Start, Even After Restart Attempt - No sub type information	■ Fuel fired booster heater fuel pipe blocked/leaking ■ Fuel fired booster heater exhaust restricted following driving through deep water or extreme off-road driving ■ Fuel fired booster heater evaporator assembly contaminated with water or debris ingress following driving through deep water or extreme off-road driving	**NOTES:** ■ This DTC is set when no flame is detected, even after re-start attempt. ■ If additional fuel fired booster heater related DTCs are also set, perform the relevant corrective action(s) first. ■ Check the fuel fired booster heater fuel pipe for blockages/leaks and replace as required ■ If the fuel fired booster heater fuel pipe is replaced then, using the manufacturer approved diagnostic system, clear the DTCs and perform routine - Fuel Priming (0x9009) ■ Check the fuel fired booster heater exhaust for blockages and rectify as required ■ Using the manufacturer approved diagnostic system, clear the DTCs and perform routine - Auxiliary Heater (AHCM) Activation Test (0x900A). This will operate the fuel fired booster heater for 15 minutes. Note that the routine should be started only when the engine is cool. The routine should be performed with the engine running and with the climate controls set to maximum heat and maximum fan. Repeat the routine again if smoke continues to be visible from the fuel fired booster heater exhaust pipe or from the area surrounding the fuel fired booster heater.

		■ Fuel fired booster heater internal failure	■ If a fuel fired booster heater fault persists, replace the fuel fired booster heater combustion tube and evaporator assembly, clear the DTCs and perform routine - Auxiliary Heater (AHCM) Activation Test (0x900A) ■ If the fault persists, install a new fuel fired booster heater, clear the DTCs and perform routine - Auxiliary Heater (AHCM) Activation Test (0x900A)
B1D32-00	Multiple Flame Interruption During Heating Cycle - No sub type information	■ Fuel fired booster heater fuel pipe blocked/leaking ■ Fuel fired booster heater exhaust restricted following driving through deep water or extreme off-road driving ■ Fuel fired booster heater evaporator assembly contaminated with water or debris ingress following driving through deep water or extreme off-road driving	△ NOTES: ■ This DTC is set when no flame is detected, even after re-start attempt. ■ If additional fuel fired booster heater related DTCs are also set, perform the relevant corrective action(s) first. ■ Check the fuel fired booster heater fuel pipe for blockages/leaks and replace as required ■ If the fuel fired booster heater fuel pipe is replaced then, using the manufacturer approved diagnostic system, clear the DTCs and perform routine - Fuel Priming (0x9009) ■ Check the fuel fired booster heater exhaust for blockages and rectify as required ■ Using the manufacturer approved diagnostic system, clear the DTCs and perform routine - Auxiliary Heater (AHCM) Activation Test (0x900A). This will operate the fuel fired booster heater for 15 minutes. Note that the routine should be started only when the engine is cool. The routine should be performed with the engine running and with the climate controls set to maximum heat and maximum fan. Repeat the routine again if smoke continues to be visible from the fuel fired booster heater exhaust pipe or from the area surrounding the fuel fired booster heater. ■ If a fuel fired booster heater fault persists, replace the fuel fired booster heater combustion tube and evaporator assembly, clear the DTCs and perform routine - Auxiliary Heater (AHCM) Activation Test (0x900A)

		■ Fuel fired booster heater internal failure	■ If the fault persists, install a new fuel fired booster heater, clear the DTCs and perform routine - Auxiliary Heater (AHCM) Activation Test (0x900A)
B1D33-00	Flame Interruption During Normal Operation - No sub type information	■ Fuel fired booster heater fuel pipe blocked/leaking ■ Fuel fired booster heater exhaust restricted following driving through deep water or extreme off-road driving ■ Fuel fired booster heater evaporator assembly contaminated with water or debris ingress following driving through deep water or extreme off-road driving ■ Fuel fired booster heater internal failure	**NOTES:** ■ This DTC is set when no flame is detected, even after re-start attempt. ■ If additional fuel fired booster heater related DTCs are also set, perform the relevant corrective action(s) first. ■ Check the fuel fired booster heater fuel pipe for blockages/leaks and replace as required ■ If the fuel fired booster heater fuel pipe is replaced then, using the manufacturer approved diagnostic system, clear the DTCs and perform routine - Fuel Priming (0x9009) ■ Check the fuel fired booster heater exhaust for blockages and rectify as required ■ Using the manufacturer approved diagnostic system, clear the DTCs and perform routine - Auxiliary Heater (AHCM) Activation Test (0x900A). This will operate the fuel fired booster heater for 15 minutes. Note that the routine should be started only when the engine is cool. The routine should be performed with the engine running and with the climate controls set to maximum heat and maximum fan. Repeat the routine again if smoke continues to be visible from the fuel fired booster heater exhaust pipe or from the area surrounding the fuel fired booster heater. ■ If a fuel fired booster heater fault persists, replace the fuel fired booster heater combustion tube and evaporator assembly, clear the DTCs and perform routine - Auxiliary Heater (AHCM) Activation Test (0x900A)

			■ If the fault persists, install a new fuel fired booster heater, clear the DTCs and perform routine - Auxiliary Heater (AHCM) Activation Test (0x900A)
U0010-00	Medium Speed CAN Communication Bus - No sub type information	■ Medium speed CAN BUS off	■ Check for other CAN Bus off codes. Refer to the electrical circuit diagrams and check the module connector and power/ground circuits. Refer to network communication section of the workshop manual. Using the manufacturers approved diagnostic system, complete a CAN integrity test
U0028-88	Vehicle Communication Bus A - Bus off	■ K-BUS short circuit to power or ground	■ Refer to the electrical circuit diagrams and check the K-BUS circuit between the Climate Control Module and the Fuel Fired Booster Heater. Refer to the Network Communications section of the workshop manual
U0140-00	Lost Communication With Body Control Module - No sub type information	■ Loss of CAN communication with Central Junction Box ■ CAN circuit fault	■ Check for other modules reporting CAN Bus off or lost communication faults. Check CAN wiring. Using the manufacturer approved diagnostic system, complete a CAN integrity test. Refer to the electrical circuit diagrams and check the module CAN, power and ground circuits. Refer to the Network Communications section of the workshop manual
U0164-00	Lost Communication With HVAC Control Module - No sub type information	■ Fuel Fired Booster Heater Control Module missing message ■ Central Junction Box missing message	■ Check for other modules reporting CAN Bus off or lost communication faults. Check CAN wiring. Using the manufacturer approved diagnostic system, complete a CAN integrity test. Refer to the electrical circuit diagrams and check the module CAN, power and ground circuits. Refer to the Network Communications section of the workshop manual ■ Clear the DTCs and test the system for normal operation. If the concern persists, install a new fuel fired booster heater. Using the manufacturer approved diagnostic system, clear the DTCs and perform routine - Auxiliary Heater (AHCM) Activation Test (0x900A). This will operate the fuel fired booster heater for 15 minutes. Note that the routine should be started only when the engine is cool. The routine should be performed with the engine

		■ Information pack missing message	running and with the climate controls set to maximum heat and maximum fan. Repeat the routine again if smoke continues to be visible from the fuel fired booster heater exhaust pipe or from the area surrounding the fuel fired booster heater
U0166-00	Lost Communication With Auxiliary Heater Control Module - No sub type information	■ No or limited K-Bus Communication with Fuel Fired Booster Heater Control Module ■ CAN circuit fault	■ Refer to the electrical circuit diagrams and check the K-BUS circuit between the Fuel Fired Booster Heater Control Module and the Central Junction Box. Refer to the Network Communications section of the workshop manual
U0300-00	Internal Control Module Software Incompatibility - No sub type information	■ Incorrect MS CAN signal configuration (expulsion mode) ■ CAN bus configuration failure ■ CAN bus short circuit to ground	■ Check for other modules reporting CAN Bus off or lost communication faults. If other modules report problems, check the software version in the Central Junction Box using the manufacturers approved diagnostic system. If no other modules report problems, check the software version in the Transmission Control Module. Update as necessary
U1000-00	Solid State Driver Protection Activated - Driver Disabled - No sub type information	■ Control module internal output driver is disabled due to a fault condition detected on	**NOTE:** The fault must be rectified on the output circuit before the DTC is cleared. Repeated logs of this DTC will result in unrecoverable control module shutdown to prevent module damage

		the output circuit to protect the control module. Another DTC will be logged to show which specific output has the error	■ Check for other DTCs to determine which output circuit has the fault. Refer to the electrical circuit diagrams and check the relevant output circuits
U2002-23	Switch - Signal stuck low	■ A-surface Climate Control switch stuck	■ Check the switch operation. Renew the Climate Control Module/switch pack
U201A-56	Control Module Main Calibration Data - Invalid /incomplete configuration	■ Incorrect calibration file downloaded to control module	■ Configure the module using the approved diagnostic system
U2101-56	Control Module Configuration Incompatible - Invalid /incomplete configuration	■ Incorrect car configuration parameters	■ Configure the module using the approved diagnostic system
U3000-41	Control Module - General checksum failure	■ Internal software corruption	■ Configure the module using the approved diagnostic system
U3003-	Battery Voltage		

62	- Signal compare failure	■ Climate Control module voltage to vehicle voltage mis-match	■ Check vehicle battery and charging system. Refer to the relevant section in the workshop manual. Refer to the electrical circuit diagrams and check the power supply and ground circuits to the module

2012.0 RANGE ROVER (LM), 100-00

GENERAL INFORMATION

DESCRIPTION AND OPERATION

CLIMATE CONTROLLED SEAT MODULE - FRONT/REAR (SCME/SCMF)

CAUTION:

Diagnosis by substitution from a donor vehicle is **NOT** acceptable. Substitution of control modules does not guarantee confirmation of a fault, and may also cause additional faults in the vehicle being tested and/or the donor vehicle.

NOTES:

- If the control module or a component is suspect and the vehicle remains under manufacturer warranty, refer to the Warranty Policy and Procedures manual, or determine if any prior approval programme is in operation, prior to the installation of a new module/component.
- Generic scan tools may not read the codes listed, or may read only 5-digit codes. Match the 5 digits from the scan tool to the first 5 digits of the 7-digit code listed to identify the fault (the last 2 digits give extra information read by the manufacturer-approved diagnostic system).
- Check and rectify basic faults before beginning diagnostic routines involving pinpoint tests.
- Inspect connectors for signs of water ingress, and pins for damage and/or corrosion.
- If DTCs are recorded and, after performing the pinpoint tests, a fault is not present, an intermittent concern may be the cause. Always check for loose connections and corroded terminals.
- The climate system functions in a manner that means any detected error state either intermittent or permanent will shut down the complete seat climate system until the next ignition cycle, this does not mean that both climate units within the one seat have failed. This shut down is design intent to protect the system to ensure that the fault detected does not damage the units, it is possible that both units are functioning correctly and that the fault lies elsewhere within the system. The following process can be carried out without removing either the seats or the climate units from the vehicle and should correctly identify any failed units, this should ensure that only failed units are changed under warranty. Any units exhibiting the correct reading as per process below, should **NOT** be changed under warranty. If all units have a correct reading then re-confirm customer symptom, if customer symptom is still present then carry out further system checks
- Check DDW for open campaigns. Refer to the corresponding bulletins and SSMs which may be valid for the specific customer complaint and carry out the recommendations as required

The table below lists all Diagnostic Trouble Codes (DTCs) that could be logged in the Climate Controlled Seat Module - Front/Rear (SCME/SCMF), for additional Diagnosis and Testing information refer to the relevant Diagnosis and Testing Section. For additional information, refer to: Seats - Vehicles With: Climate Controlled Seats (501-10 Seating, Diagnosis and Testing).

DTC	DESCRIPTION	POSSIBLE CAUSES	ACTION
B10B9-13	Blower Control - Circuit open	■ LH seat blower + circuit, open circuit ■ LH seat blower - circuit, open circuit ■ Connectors disconnected ■ Connector pin damage ■ Blower motor assembly open circuit ■ Climate Control Seat Module failure	■ Carry out On Demand Self Test (ODST) using manufacturer approved diagnostic system to confirm the fault is present. Refer to the electrical circuit diagrams and check LH seat blower + circuit for open circuit. Check LH seat blower - circuit for open circuit. Check for any disconnected connectors or damaged connector pins. Check blower motor assembly for open circuit. Refer to the warranty policy and procedures manual if the Climate Control Seat Module is suspect. Carry out On Demand Self Test (ODST) using manufacturer approved diagnostic system to confirm rectification. Alternatively carry out any pinpoint tests associated with this DTC using the manufacturer approved diagnostic system
B10B9-4B	Blower Control - Over temperature	■ Mechanical restriction in blower motor assembly	■ Check for mechanical restriction or debris in blower motor assembly. Carry out On Demand Self Test (ODST) using manufacturer approved diagnostic system to confirm the fault is present. Refer to the electrical circuit diagrams and check LH seat blower + circuit for short to ground. Check LH seat blower - circuit for short to ground. Check blower motor assembly for short to

		■ LH seat blower + circuit, short to ground ■ LH seat blower - circuit, short to ground ■ Blower motor assembly, short to ground ■ Climate Control Seat Module failure	ground. Refer to the warranty policy and procedures manual if the Climate Control Seat Module is suspect. Carry out On Demand Self Test (ODST) using manufacturer approved diagnostic system to confirm rectification. Alternatively carry out any pinpoint tests associated with this DTC using the manufacturer approved diagnostic system
B1157-13	Blower Control B - Circuit open	■ RH seat blower + circuit, open circuit ■ RH seat blower - circuit, open circuit ■ Connectors disconnected ■ Connector pin damage ■ Blower motor assembly open circuit ■ Climate Control Seat Module failure	■ Carry out On Demand Self Test (ODST) using manufacturer approved diagnostic system to confirm the fault is present. Refer to the electrical circuit diagrams and check RH seat blower + circuit for open circuit. Check RH seat blower - circuit for open circuit. Check for any disconnected connectors or damaged connector pins. Check blower motor assembly for open circuit. Refer to the warranty policy and procedures manual if the Climate Control Seat Module is suspect. Carry out On Demand Self Test (ODST) using manufacturer approved diagnostic system to confirm rectification. Alternatively carry out any pinpoint tests associated with this DTC using the manufacturer approved diagnostic system

B1157-4B	Blower Control B - Over temperature	■ Mechanical restriction in blower motor assembly ■ RH seat blower + circuit, short to ground ■ RH seat blower - circuit, short to ground ■ Blower motor assembly, short to ground ■ Climate Control Seat Module failure	■ Check for mechanical restriction or debris in blower motor assembly. Carry out On Demand Self Test (ODST) using manufacturer approved diagnostic system to confirm the fault is present. Refer to the electrical circuit diagrams and check RH seat blower + circuit for short to ground. Check RH seat blower - circuit for short to ground. Check blower motor assembly for short to ground. Refer to the warranty policy and procedures manual if the Climate Control Seat Module is suspect. Carry out On Demand Self Test (ODST) using manufacturer approved diagnostic system to confirm rectification. Alternatively carry out any pinpoint tests associated with this DTC using the manufacturer approved diagnostic system
B120E-13	Right Thermal Electric Device Control - Circuit open	■ RH seat back thermal electric device + circuit, open circuit ■ RH seat back thermal electric device - circuit, open circuit ■ RH seat cushion thermal	■ Carry out On Demand Self Test (ODST) using manufacturer approved diagnostic system to confirm the fault is present. Refer to the electrical circuit diagrams and check, RH seat back thermal electric device + circuit for open circuit. Check RH seat back thermal electric device - circuit for open circuit. Check RH seat cushion thermal electric device + circuit for open circuit. Check RH seat cushion thermal electric device - circuit for open circuit. Check for any disconnected connectors or damaged connector pins. Check climate seat backrest thermal electric device assembly for open circuit. Check climate seat cushion thermal electric device assembly for open circuit. Refer to the warranty policy and procedures manual if the Climate Control Seat Module is suspect. Carry out On Demand Self Test (ODST) using manufacturer approved diagnostic system to confirm rectification. Alternatively carry out any pinpoint tests associated with this DTC using the manufacturer approved diagnostic system

			electric device + circuit, open circuit ■ RH seat cushion thermal electric device - circuit, open circuit ■ Connectors disconnected ■ Connector pin damage ■ Climate seat backrest thermal electric device assembly, open circuit ■ Climate seat cushion thermal electric device assembly, open circuit ■ Climate Control Seat Module failure	
B120E-19	Right Thermal Electric Device Control -	■ RH seat back thermal electric device	■ Carry out On Demand Self Test (ODST) using manufacturer approved diagnostic system to confirm the fault is present. Refer to the electrical circuit diagrams and check, RH seat back thermal electric device + circuit for short	

		Circuit current above threshold	+ circuit, short to ground ■ RH seat back thermal electric device - circuit, short to ground ■ RH seat cushion thermal electric device + circuit, short to ground ■ RH seat cushion thermal electric device - circuit, short to ground ■ Climate seat backrest thermal electric device assembly, short to ground ■ Climate seat cushion thermal electric device assembly, short to ground	to ground. Check RH seat back thermal electric device - circuit for short to ground. Check RH seat cushion thermal electric device + circuit for short to ground. Check RH seat cushion thermal electric device - circuit for short to ground. Check climate seat backrest thermal electric device assembly for short to ground. Check climate seat cushion thermal electric device assembly for short to ground. Refer to the warranty policy and procedures manual if the Climate Control Seat Module is suspect. Carry out On Demand Self Test (ODST) using manufacturer approved diagnostic system to confirm rectification. Alternatively carry out any pinpoint tests associated with this DTC using the manufacturer approved diagnostic system	

		■ Climate Control Seat Module failure	
B120E-4B	Right Thermal Electric Device Control - Over temperature	■ Restriction in thermal electric device air path ■ RH seat back thermal electric device + circuit, short to ground ■ RH seat back thermal electric device - circuit, short to ground ■ RH seat cushion thermal electric device + circuit, short to ground ■ RH seat cushion thermal electric device - circuit, short to ground ■ Climate seat backrest	■ Check for blockage or restriction in thermal electric device air path. Carry out On Demand Self Test (ODST) using manufacturer approved diagnostic system to confirm the fault is present. Refer to the electrical circuit diagrams and check, RH seat back thermal electric device + circuit for short to ground. Check RH seat back thermal electric device - circuit for short to ground. Check RH seat cushion thermal electric device + circuit for short to ground. Check RH seat cushion thermal electric device - circuit for short to ground. Check climate seat backrest thermal electric device assembly for short to ground. Check climate seat cushion thermal electric device assembly for short to ground. Refer to the warranty policy and procedures manual if the Climate Control Seat Module is suspect. Carry out On Demand Self Test (ODST) using manufacturer approved diagnostic system to confirm rectification. Alternatively carry out any pinpoint tests associated with this DTC using the manufacturer approved diagnostic system

		thermal electric device assembly, short to ground ■ Climate seat cushion thermal electric device assembly, short to ground ■ Climate Control Seat Module failure	
B120F-98	Left Seat Cushion - Component or system over temperature	■ The Climate Control Seat Module LH cushion sensor input circuit temperature exceeds 65 Degrees C continuously for more than 4 seconds during cooling ■ The Climate Control Seat Module LH cushion sensor input circuit temperature is greater than 110 Degrees C	**NOTE:** For a more detailed repair procedure of this DTC please refer to section 501-10 climate controlled seats diagnosis and testing workshop manual ■ Check for blockage or restriction in thermal electric device fan exhaust vent. Check for restricted thermal electric fan movement. Carry out On Demand Self Test (ODST) using manufacturer approved diagnostic system to confirm rectification. Alternatively carry out any pinpoint tests associated with this DTC using the manufacturer approved diagnostic system. For additional information, refer to: Seats - Vehicles With: Climate Controlled Seats (501-10 Seating, Diagnosis and Testing).

			for more than 4 seconds during heating ■ Blocked or restricted thermal electric device fan exhaust vent ■ Restricted thermal electric fan movement	
	B1223-13	Right Seat Cushion Temperature Sensor - Circuit open	■ RH seat cushion sensor circuit, open circuit ■ RH seat cushion sensor - circuit, open circuit ■ Connectors disconnected ■ Connector pin damage ■ Climate seat cushion temperature sensor assembly, open circuit	■ Carry out On Demand Self Test (ODST) using manufacturer approved diagnostic system to confirm the fault is present. Refer to the electrical circuit diagrams and check, RH seat cushion sensor circuit for open circuit. Check RH seat cushion sensor - circuit for open circuit. Check for any disconnected connectors or damaged connector pins. Check Climate seat cushion temperature sensor assembly for open circuit. Refer to the warranty policy and procedures manual if the Climate Control Seat Module is suspect. Carry out On Demand Self Test (ODST) using manufacturer approved diagnostic system to confirm rectification. Alternatively carry out any pinpoint tests associated with this DTC using the manufacturer approved diagnostic system

		■ Climate Control Seat Module failure	
B1224-13	Left Seat Cushion Temperature Sensor - Circuit open	■ LH seat back thermal electric device + circuit, open circuit ■ LH seat back thermal electric device - circuit, open circuit ■ LH seat cushion thermal electric device + circuit, open circuit ■ LH seat cushion thermal electric device - circuit, open circuit ■ Connectors disconnected ■ Connector pin damage ■ Climate seat backrest	■ Carry out On Demand Self Test (ODST) using manufacturer approved diagnostic system to confirm the fault is present. Refer to the electrical circuit diagrams and check, LH seat back thermal electric device + circuit for open circuit. Check LH seat back thermal electric device - circuit for open circuit. Check LH seat cushion thermal electric device + circuit for open circuit. Check LH seat cushion thermal electric device - circuit for open circuit. Check for any disconnected connectors or damaged connector pins. Check climate seat backrest thermal electric device assembly for open circuit. Check climate seat cushion thermal electric device assembly for open circuit. Refer to the warranty policy and procedures manual if the Climate Control Seat Module is suspect. Carry out On Demand Self Test (ODST) using manufacturer approved diagnostic system to confirm rectification. Alternatively carry out any pinpoint tests associated with this DTC using the manufacturer approved diagnostic system

			thermal electric device assembly, open circuit ■ Climate seat cushion thermal electric device assembly, open circuit ■ Climate Control Seat Module failure	
	B1224-19	Left Thermal Electric Device Control - Circuit current above threshold	■ LH seat back thermal electric device + circuit, short to ground ■ LH seat back thermal electric device - circuit, short to ground ■ LH seat cushion thermal electric device + circuit, short to ground ■ LH seat cushion thermal	■ Carry out On Demand Self Test (ODST) using manufacturer approved diagnostic system to confirm the fault is present. Refer to the electrical circuit diagrams and check, LH seat back thermal electric device + circuit for short to ground. Check LH seat back thermal electric device - circuit for short to ground. Check LH seat cushion thermal electric device + circuit for short to ground. Check LH seat cushion thermal electric device - circuit for short to ground. Check climate seat backrest thermal electric device assembly for short to ground. Check climate seat cushion thermal electric device assembly for short to ground. Refer to the warranty policy and procedures manual if the Climate Control Seat Module is suspect. Carry out On Demand Self Test (ODST) using manufacturer approved diagnostic system to confirm rectification. Alternatively carry out any pinpoint tests associated with this DTC using the manufacturer approved diagnostic system

			electric device - circuit, short to ground ■ Climate seat backrest thermal electric device assembly, short to ground ■ Climate seat cushion thermal electric device assembly, short to ground ■ Climate Control Seat Module failure	
B1224-4B	Left Thermal Electric Device Control - Over temperature	■ Restriction in thermal electric device air path ■ LH seat back thermal electric device + circuit, short to ground ■ LH seat back thermal electric device - circuit, short to ground	■ Check for blockage or restriction in thermal electric device air path. Carry out On Demand Self Test (ODST) using manufacturer approved diagnostic system to confirm the fault is present. Refer to the electrical circuit diagrams and check, LH seat back thermal electric device + circuit for short to ground. Check LH seat back thermal electric device - circuit for short to ground. Check LH seat cushion thermal electric device + circuit for short to ground. Check LH seat cushion thermal electric device - circuit for short to ground. Check climate seat backrest thermal electric device assembly for short to ground. Check climate seat cushion thermal electric device assembly for short to ground. Refer to the warranty policy and procedures manual if the Climate Control Seat Module is suspect. Carry out On Demand Self Test (ODST) using manufacturer approved diagnostic system to confirm rectification. Alternatively carry out any pinpoint tests associated with this DTC using the manufacturer approved diagnostic system	

			■ LH seat cushion thermal electric device + circuit, short to ground ■ LH seat cushion thermal electric device - circuit, short to ground ■ Climate seat backrest thermal electric device assembly, short to ground ■ Climate seat cushion thermal electric device assembly, short to ground ■ Climate Control Seat Module failure	
B1225-13	Right Seat Back Temperature Sensor - Circuit open	■ RH seat back sensor circuit, open circuit ■ RH seat back sensor -	■ Carry out On Demand Self Test (ODST) using manufacturer approved diagnostic system to confirm the fault is present. Refer to the electrical circuit diagrams and check, RH seat back sensor circuit for open circuit. Check RH seat back sensor - circuit for open circuit. Check for any disconnected connectors or damaged connector pins. Check Climate seat back temperature	

			circuit, open circuit ■ Connectors disconnected ■ Connector pin damage ■ Climate seat back temperature sensor assembly, open circuit ■ Climate Control Seat Module failure	sensor assembly for open circuit. Refer to the warranty policy and procedures manual if the Climate Control Seat Module is suspect. Carry out On Demand Self Test (ODST) using manufacturer approved diagnostic system to confirm rectification. Alternatively carry out any pinpoint tests associated with this DTC using the manufacturer approved diagnostic system
B1229-13	Left Seat Back Temperature Sensor - Circuit open	■ LH seat back sensor circuit, open circuit ■ LH seat back sensor - circuit, open circuit ■ Connectors disconnected ■ Connector pin damage ■ Climate seat back temperature sensor	■ Carry out On Demand Self Test (ODST) using manufacturer approved diagnostic system to confirm the fault is present. Refer to the electrical circuit diagrams and check, LH seat back sensor circuit for open circuit. Check LH seat back sensor - circuit for open circuit. Check for any disconnected connectors or damaged connector pins. Check Climate seat back temperature sensor assembly for open circuit. Refer to the warranty policy and procedures manual if the Climate Control Seat Module is suspect. Carry out On Demand Self Test (ODST) using manufacturer approved diagnostic system to confirm rectification. Alternatively carry out any pinpoint tests associated with this DTC using the manufacturer approved diagnostic system	

		assembly, open circuit ■ Climate Control Seat Module failure	
B122A-11	Right Seat Cushion Blower Speed Sensor - Circuit short to ground	■ RH cushion fan speed, circuit short to ground ■ Blower motor assembly, short to ground ■ Climate Control Seat Module failure	■ Carry out On Demand Self Test (ODST) using manufacturer approved diagnostic system to confirm the fault is present. Refer to the electrical circuit diagrams and check, RH cushion fan speed for circuit short to ground. Check blower motor assembly for short to ground. Refer to the warranty policy and procedures manual if the Climate Control Seat Module is suspect. Carry out On Demand Self Test (ODST) using manufacturer approved diagnostic system to confirm rectification. Alternatively carry out any pinpoint tests associated with this DTC using the manufacturer approved diagnostic system
B122A-12	Right Seat Cushion Blower Speed Sensor - Circuit short to battery	■ RH cushion fan speed, circuit short to power ■ Blower motor assembly, short to power ■ Climate Control Seat Module failure	■ Carry out On Demand Self Test (ODST) using manufacturer approved diagnostic system to confirm the fault is present. Refer to the electrical circuit diagrams and check, RH cushion fan speed for circuit short to power. Check blower motor assembly for short to power. Refer to the warranty policy and procedures manual if the Climate Control Seat Module is suspect. Carry out On Demand Self Test (ODST) using manufacturer approved diagnostic system to confirm rectification. Alternatively carry out any pinpoint tests associated with this DTC using the manufacturer approved diagnostic system
B122B-11	Right Seat Back Blower Speed Sensor - Circuit short to ground	■ RH seat back fan speed, circuit short to ground	■ Carry out On Demand Self Test (ODST) using manufacturer approved diagnostic system to confirm the fault is present. Refer to the electrical circuit diagrams and check, RH seat back fan speed for circuit short to ground. Check blower motor assembly for short to ground. Refer to the warranty policy and procedures manual if the Climate Control Seat Module is suspect.

		■ Blower motor assembly, short to ground ■ Climate Control Seat Module failure	Carry out On Demand Self Test (ODST) using manufacturer approved diagnostic system to confirm rectification. Alternatively carry out any pinpoint tests associated with this DTC using the manufacturer approved diagnostic system
B122B-12	Right Seat Back Blower Speed Sensor - Circuit short to battery	■ RH seat back fan speed, circuit short to power ■ Blower motor assembly, short to power ■ Climate Control Seat Module failure	■ Carry out On Demand Self Test (ODST) using manufacturer approved diagnostic system to confirm the fault is present. Refer to the electrical circuit diagrams and check, RH seat back fan speed for circuit short to power. Check blower motor assembly for short to power. Refer to the warranty policy and procedures manual if the Climate Control Seat Module is suspect. Carry out On Demand Self Test (ODST) using manufacturer approved diagnostic system to confirm rectification. Alternatively carry out any pinpoint tests associated with this DTC using the manufacturer approved diagnostic system
B122C-11	Left Seat Cushion Blower Speed Sensor - Circuit short to ground	■ LH cushion fan speed, circuit short to ground ■ Blower motor assembly, short to ground ■ Climate Control Seat Module failure	■ Carry out On Demand Self Test (ODST) using manufacturer approved diagnostic system to confirm the fault is present. Refer to the electrical circuit diagrams and check, LH cushion fan speed for circuit short to ground. Check blower motor assembly for short to ground. Refer to the warranty policy and procedures manual if the Climate Control Seat Module is suspect. Carry out On Demand Self Test (ODST) using manufacturer approved diagnostic system to confirm rectification. Alternatively carry out any pinpoint tests associated with this DTC using the manufacturer approved diagnostic system
B122C-12	Left Seat Cushion Blower Speed Sensor -	■ LH cushion fan speed, circuit short to power	■ Carry out On Demand Self Test (ODST) using manufacturer approved diagnostic system to confirm the fault is present. Refer to the electrical circuit diagrams and check, LH cushion fan speed for circuit short to power. Check

	Circuit short to battery	■ Blower motor assembly, short to power ■ Climate Control Seat Module failure	blower motor assembly for short to power. Refer to the warranty policy and procedures manual if the Climate Control Seat Module is suspect. Carry out On Demand Self Test (ODST) using manufacturer approved diagnostic system to confirm rectification. Alternatively carry out any pinpoint tests associated with this DTC using the manufacturer approved diagnostic system
B122D-11	Left Seat Back Blower Speed Sensor - Circuit short to ground	■ LH seat back fan speed, circuit short to ground ■ Blower motor assembly, short to ground ■ Climate Control Seat Module failure	■ Carry out On Demand Self Test (ODST) using manufacturer approved diagnostic system to confirm the fault is present. Refer to the electrical circuit diagrams and check, LH seat back fan speed for circuit short to ground. Check blower motor assembly for short to ground. Refer to the warranty policy and procedures manual if the Climate Control Seat Module is suspect. Carry out On Demand Self Test (ODST) using manufacturer approved diagnostic system to confirm rectification. Alternatively carry out any pinpoint tests associated with this DTC using the manufacturer approved diagnostic system
B122D-12	Left Seat Back Blower Speed Sensor - Circuit short to battery	■ LH seat back fan speed, circuit short to power ■ Blower motor assembly, short to power ■ Climate Control Seat Module failure	■ Carry out On Demand Self Test (ODST) using manufacturer approved diagnostic system to confirm the fault is present. Refer to the electrical circuit diagrams and check, LH seat back fan speed for circuit short to power. Check blower motor assembly for short to power. Refer to the warranty policy and procedures manual if the Climate Control Seat Module is suspect. Carry out On Demand Self Test (ODST) using manufacturer approved diagnostic system to confirm rectification. Alternatively carry out any pinpoint tests associated with this DTC using the manufacturer approved diagnostic system
B122E-98	Right Seat Cushion -	■ The Climate Control Seat	**NOTE:**

	Component or system over temperature	Module RH cushion sensor input circuit temperature exceeds 65 Degrees C continuously for more than 4 seconds during cooling ■ The Climate Control Seat Module RH cushion sensor input circuit temperature is greater than 110 Degrees C for more than 4 seconds during heating ■ Blocked or restricted thermal electric device fan exhaust vent ■ Restricted thermal electric fan movement	For a more detailed repair procedure of this DTC please refer to section 501-10 climate controlled seats diagnosis and testing workshop manual ■ Check for blockage or restriction in thermal electric device fan exhaust vent. Check for restricted thermal electric fan movement. Carry out On Demand Self Test (ODST) using manufacturer approved diagnostic system to confirm rectification. Alternatively carry out any pinpoint tests associated with this DTC using the manufacturer approved diagnostic system. For additional information, refer to: **Seats - Vehicles With: Climate Controlled Seats** (501-10 Seating, Diagnosis and Testing).
B122F-98	Right Seat Back -	■ The Climate Control Seat	**NOTE:**

	Component or system over temperature	Module RH seat back sensor input circuit temperature exceeds 65 Degrees C continuously for more than 4 seconds during cooling ■ The Climate Control Seat Module RH seat back sensor input circuit temperature is greater than 110 Degrees C for more than 4 seconds during heating ■ Blocked or restricted thermal electric device fan exhaust vent ■ Restricted thermal electric fan movement	For a more detailed repair procedure of this DTC please refer to section 501-10 climate controlled seats diagnosis and testing workshop manual ■ Check for blockage or restriction in thermal electric device fan exhaust vent. Check for restricted thermal electric fan movement. Carry out On Demand Self Test (ODST) using manufacturer approved diagnostic system to confirm rectification. Alternatively carry out any pinpoint tests associated with this DTC using the manufacturer approved diagnostic system. For additional information, refer to: **Seats - Vehicles With: Climate Controlled Seats** (501-10 Seating, Diagnosis and Testing).

B1230-98	Left Seat Back - Component or system over temperature	■ The Climate Control Seat Module LH seat back sensor input circuit temperature exceeds 65 Degrees C continuously for more than 4 seconds during cooling ■ The Climate Control Seat Module LH seat back sensor input circuit temperature is greater than 110 Degrees C for more than 4 seconds during heating ■ Blocked or restricted thermal electric device fan exhaust vent ■ Restricted thermal electric fan movement	**NOTE:** For a more detailed repair procedure of this DTC please refer to section 501-10 climate controlled seats diagnosis and testing workshop manual ■ Check for blockage or restriction in thermal electric device fan exhaust vent. Check for restricted thermal electric fan movement. Carry out On Demand Self Test (ODST) using manufacturer approved diagnostic system to confirm rectification. Alternatively carry out any pinpoint tests associated with this DTC using the manufacturer approved diagnostic system. For additional information, refer to: **Seats - Vehicles With: Climate Controlled Seats** (501-10 Seating, Diagnosis and Testing).	

B1231-7A	Right Seat - Fluid leak or seal failure	■ The Climate Control Seat Module has detected an input temperature difference greater than expected between RH seat back sensor and RH cushion sensor ■ Climate seat back assembly air path leaking ■ Climate seat cushion assembly air path leaking ■ Seat assembly damaged	**NOTE:** For a more detailed repair procedure of this DTC please refer to section 501-10 climate controlled seats diagnosis and testing workshop manual ■ Check for blockage or restriction in seat back thermal electric device fan ducts. Check seat back thermal electric device fan exhaust vent is clear. Check for blockage or restriction in seat cushion thermal electric device fan ducts. Check seat cushion thermal electric device fan exhaust vent is clear. Carry out On Demand Self Test (ODST) using manufacturer approved diagnostic system to confirm rectification. Alternatively carry out any pinpoint tests associated with this DTC using the manufacturer approved diagnostic system. For additional information, refer to: **Seats - Vehicles With: Climate Controlled Seats** (501-10 Seating, Diagnosis and Testing).
B1232-7A	Left Seat - Fluid leak or seal failure	■ The Climate Control Seat Module has detected an input temperature difference greater than expected	**NOTE:** For a more detailed repair procedure of this DTC please refer to section 501-10 climate controlled seats diagnosis and testing workshop manual ■ Check for blockage or restriction in seat back thermal electric device fan ducts. Check seat back thermal electric device fan exhaust vent is clear.

		between LH seat back sensor and LH cushion sensor ■ Climate seat back assembly air path leaking ■ Climate seat cushion assembly air path leaking ■ Seat assembly damaged	Check for blockage or restriction in seat cushion thermal electric device fan ducts. Check seat cushion thermal electric device fan exhaust vent is clear. Carry out On Demand Self Test (ODST) using manufacturer approved diagnostic system to confirm rectification. Alternatively carry out any pinpoint tests associated with this DTC using the manufacturer approved diagnostic system. For additional information, refer to: **Seats - Vehicles With: Climate Controlled Seats** (501-10 Seating, Diagnosis and Testing).
B1235-13	Left Seat Cushion Temperature Sensor - Circuit open	■ LH seat cushion sensor circuit, open circuit ■ LH seat cushion sensor - circuit, open circuit ■ Connectors disconnected ■ Connector pin damage ■ Climate seat cushion temperature sensor assembly, open circuit	■ Carry out On Demand Self Test (ODST) using manufacturer approved diagnostic system to confirm the fault is present. Refer to the electrical circuit diagrams and check, LH seat cushion sensor circuit for open circuit. Check LH seat cushion sensor - circuit for open circuit. Check for any disconnected connectors or damaged connector pins. Check Climate seat cushion temperature sensor assembly for open circuit. Refer to the warranty policy and procedures manual if the Climate Control Seat Module is suspect. Carry out On Demand Self Test (ODST) using manufacturer approved diagnostic system to confirm rectification. Alternatively carry out any pinpoint tests associated with this DTC using the manufacturer approved diagnostic system

		■ Climate Control Seat Module failure	
U0010-88	Medium Speed CAN Communication Bus - Bus off	■ Medium Speed CAN communication bus off	■ Refer to the electrical circuit diagrams and check the power and ground connections to the module. Using the manufacturer approved diagnostic system, complete a CAN network integrity test. Refer to the electrical circuit diagrams and check the CAN network
U0140-00	Lost Communication With Body Control Module - No sub type information	■ CAN harness link between Climate Control Seat Module and Central Junction Box malfunction ■ The Climate Control Seat Module has not received the expected CAN signal from the Central Junction Box within the specified time interval	■ Using the manufacturer approved diagnostic system, check Central Junction Box for DTCs and refer to the relevant DTC Index. Using the manufacturer approved diagnostic system, carry out network integrity test. Refer to the electrical circuit diagrams and check Central Junction Box power and ground circuits for open circuit. Check CAN harness between Climate Control Seat Module and Central Junction Box, repair as necessary
U0142-00	Lost Communication With Body	■ CAN harness link between Climate	■ Using the manufacturer approved diagnostic system, check Rear Junction Box for DTCs and refer to the relevant DTC Index. Using the manufacturer approved diagnostic system, carry out network integrity test. Refer to the

	Control Module "B" - No sub type information	Control Seat Module and Rear Junction Box malfunction ■ The Climate Control Seat Module has not received the expected CAN signal from the Rear Junction Box within the specified time interval	electrical circuit diagrams and check Rear Junction Box power and ground circuits for open circuit. Check CAN harness between Climate Control Seat Module and Rear Junction Box, repair as necessary	
U0155-00	Lost Communication With Instrument Panel Cluster (IPC) Control Module - No sub type information	■ CAN harness link between Climate Control Seat Module and Instrument Panel Cluster (IPC) network malfunction ■ The Climate Control Seat Module has not received the expected CAN signal from the Instrument	■ Using the manufacturer approved diagnostic system, check Instrument Panel Cluster (IPC) for DTCs and refer to the relevant DTC Index. Using the manufacturer approved diagnostic system, carry out network integrity test. Refer to the electrical circuit diagrams and check Instrument Panel Cluster (IPC) power and ground circuits for open circuit. Check CAN harness between Climate Control Seat Module and Instrument Panel Cluster (IPC), repair as necessary	

		Panel Cluster (IPC) within the specified time interval	
U0156-00	Lost Communication With Information Center "A" - No sub type information	■ CAN harness link between Climate Control Seat Module and Information and Entertainment Control Module network malfunction ■ The Climate Control Seat Module has not received the expected CAN signal from the Information and Entertainment Control Module within the specified time interval	■ Using the manufacturer approved diagnostic system, check Information and Entertainment Control Module for DTCs and refer to the relevant DTC Index. Using the manufacturer approved diagnostic system, carry out network integrity test. Refer to the electrical circuit diagrams and check Information and Entertainment Control Module power and ground circuits for open circuit. Check CAN harness between Climate Control Seat Module and Information and Entertainment Control Module, repair as necessary
U0300-00	Internal Control Module Software		■ Using the manufacturer approved diagnostic system, re-configure the Climate Control Seat Module and the Rear Junction Box. Carry out On Demand Self Test (ODST) using manufacturer approved diagnostic system to confirm

	Incompatibility - No sub type information	■ Incorrect or invalid software has been installed	rectification. Refer to the warranty policy and procedures manual if the Climate Control Seat Module is suspect
U0401-00	Invalid Data Received from ECM/PCM A - No sub type information	■ The Engine Control Module (ECM) has transmitted engine speed quality factor CAN signal at a specific value for a greater than expected time period	■ Using the manufacturer approved diagnostic system, check Engine Control Module for DTCs and refer to the relevant DTC Index
U2101-00	Control module Configuration Incompatible - No sub type information	■ Calibration incomplete /corrupt	■ Using the manufacturer approved diagnostic system, re-configure the Climate Control Seat Module and the Rear Junction Box. Carry out On Demand Self Test (ODST) using manufacturer approved diagnostic system to confirm rectification
U3000-04	Control Module - System internal failures	■ Climate Control Seat Module failure ■ Climate Control Seat Module microprocessor failed internal	■ Refer to the warranty policy and procedures manual if the Climate Control Seat Module is suspect

		ROM and/or RAM checksum test	
U3003-62	Battery Voltage - Signal compare failure	■ Mismatch in battery voltage of 2 volts or more between the measured battery voltage at the Climate Control Seat Module and the battery voltage signal sent from the Rear Junction Box	■ Refer to the electrical circuit diagrams and check that power supply voltage at Climate Control Seat Module and Rear Junction Box is not different by more than 2 volts. Rectify as required. Carry out On Demand Self Test (ODST) using manufacturer approved diagnostic system to confirm rectification

GENERAL INFORMATION

DESCRIPTION AND OPERATION

DIGITAL AUDIO BROADCAST MODULE (DABM)

CAUTION:

Diagnosis by substitution from a donor vehicle is **NOT** acceptable. Substitution of control modules does not guarantee confirmation of a fault, and may also cause additional faults in the vehicle being tested and/or the donor vehicle

NOTES:

- If the control module or a component is suspect and the vehicle remains under manufacturer warranty, refer to the warranty policy and procedures manual, or determine if any prior approval programme is in operation, prior to the installation of a new module/component
- Generic scan tools may not read the codes listed, or may read only 5-digit codes. Match the 5 digits from the scan tool to the first 5 digits of the 7-digit code listed to identify the fault (the last 2 digits give extra information read by the manufacturer-approved diagnostic system)
- When performing voltage or resistance tests, always use a digital multimeter accurate to three decimal places and with a current calibration certificate. When testing resistance, always take the resistance of the digital multimeter leads into account
- Check and rectify basic faults before beginning diagnostic routines involving pinpoint tests
- Inspect connectors for signs of water ingress, and pins for damage and/or corrosion
- If diagnostic trouble codes are recorded and, after performing the pinpoint tests, a fault is not present, an intermittent concern may be the cause. Always check for loose connections and corroded terminals
- Where an 'on demand self-test' is referred to, this can be accessed via the 'diagnostic trouble code monitor' tab on the manufacturers approved diagnostic system
- Check DDW for open campaigns. Refer to the corresponding bulletins and SSMs which may be valid for the specific customer complaint and carry out the recommendations as required

The table below lists all Diagnostic Trouble Codes (DTCs) that could be logged in the Digital Audio Broadcast Module, for additional Diagnosis and Testing information refer to the relevant Diagnosis and Testing Section. For additional information, refer to: Information and Entertainment System (415-00 Information and Entertainment System - General Information, Diagnosis and Testing).

DTC	DESCRIPTION	POSSIBLE CAUSES	ACTION
B11A4-11	L-Band Antenna - Circuit short to ground	■ L-Band antenna circuit short to ground	■ Refer to the electrical guides and check the circuit between the antenna and the tuner module
B11A4-15	L-Band Antenna - Circuit short to battery or open	■ L-Band antenna circuit short to power or open circuit	■ Refer to the electrical guides and check the circuit between the antenna and the tuner module
B11A5-11	Band 3 Antenna - Circuit short to ground	■ Band 3 antenna circuit short to ground	■ Refer to the electrical guides and check the circuit
B11A5-15	Band 3 Antenna - Circuit short to battery or open	■ Band 3 antenna circuit short to power or open circuit	■ Refer to the electrical guides and check the circuit
U3000-04	Control Module - System internal failures	■ Digital audio broadcast module internal failure	■ Renew the control module. Refer to the warranty policy and procedures manual if a module is suspect

U3000-44	Control Module - Data memory failure	■ Digital audio broadcast module internal RAM memory failure	■ Renew the control module. Refer to the warranty policy and procedures manual if a module is suspect
U3000-4A	Control Module - Incorrect component installed	■ Digital audio broadcast module incorrect component installed ■ The module has been installed to a vehicle not configured to accept it	■ Using the manufacturer approved diagnostic system select the vehicle configuration main menu, select configure existing modules menu and program the module
U3000-55	Control Module - Not configured	■ Digital audio broadcast module not configured correctly	■ Using the manufacturer approved diagnostic system select the vehicle configuration main menu, select configure existing modules menu and program the module
U3000-87	Control Module - Missing message	■ Missing message	■ Using the manufacturer approved diagnostic system select the vehicle configuration main menu, select configure existing modules menu and program the module
U3000-98	Control Module - Component or system over temperature	■ Digital audio broadcast module component or system over temperature	■ Cool the vehicle interior down by ensuring it is in the shade and have the A/C on cool. When cool, clear the DTC and retest. If the problem persists, renew the module. Refer to the warranty policy and procedures manual if a module is suspect
U3003-62	Battery Voltage - Signal compare failure	■ Digital audio broadcast module voltage differs more than ±2V compared to central electronics module voltage	■ Check vehicle battery and charging system. Refer to the relevant section in the workshop manual. Refer to the electrical circuit diagrams and check the power and ground supply circuits to the modules

GENERAL INFORMATION

DESCRIPTION AND OPERATION

DIGITAL AUDIO CONTROL MODULE C (DACMC)

CAUTION:

Diagnosis by substitution from a donor vehicle is **NOT** acceptable. Substitution of control modules does not guarantee confirmation of a fault, and may also cause additional faults in the vehicle being tested and/or the donor vehicle

NOTES:

- If the control module or a component is suspect and the vehicle remains under manufacturer warranty, refer to the warranty policy and procedures manual, or determine if any prior approval programme is in operation, prior to the installation of a new module/component
- Generic scan tools may not read the codes listed, or may read only 5-digit codes. Match the 5 digits from the scan tool to the first 5 digits of the 7-digit code listed to identify the fault (the last 2 digits give extra information read by the manufacturer-approved diagnostic system)
- When performing voltage or resistance tests, always use a digital multimeter accurate to three decimal places and with a current calibration certificate. When testing resistance, always take the resistance of the digital multimeter leads into account
- Check and rectify basic faults before beginning diagnostic routines involving pinpoint tests
- Inspect connectors for signs of water ingress, and pins for damage and/or corrosion
- If diagnostic trouble codes are recorded and, after performing the pinpoint tests, a fault is not present, an intermittent concern may be the cause. Always check for loose connections and corroded terminals
- Where an 'on demand self-test' is referred to, this can be accessed via the 'diagnostic trouble code monitor' tab on the manufacturers approved diagnostic system
- Check DDW for open campaigns. Refer to the corresponding bulletins and SSMs which may be valid for the specific customer complaint and carry out the recommendations as required

The table below lists all Diagnostic Trouble Codes (DTCs) that could be logged in the Digital Audio Control Module C, for additional Diagnosis and Testing information refer to the relevant Diagnosis and Testing Section. For additional information, refer to: Information and Entertainment System (415-00 Information and Entertainment System - General Information, Diagnosis and Testing).

DTC	DESCRIPTION	POSSIBLE CAUSES	ACTION
B1A56-02	Antenna - General signal failure	■ Antenna general signal failure	■ Renew the diversity antenna amplifier
B1A56-11	Antenna - Circuit short to ground	■ Diversity antenna amplifier circuit short to ground	■ Refer to the electrical guides and check the diversity antenna amplifier circuit and the antenna for short circuit to ground
B1A56-12	Antenna - Circuit short to battery	■ Diversity antenna amplifier circuit short to power	■ Refer to the electrical guides and check the diversity antenna amplifier circuit and the antenna for short circuit to power
B1A56-13	Antenna - Circuit open	■ Diversity antenna amplifier circuit open circuit	■ Refer to the electrical guides and check the diversity antenna amplifier circuit and the antenna for open circuit
U200D-14	Control Module Output Power A - Circuit short to ground or open	■ Diversity antenna amplifier power supply circuit short to ground or open circuit	**NOTE:** This DTC will always be present, due to electrical architecture of vehicle ■ No repair action is required

U3000-04	Control Module - System internal failures	■ Diversity antenna amplifier internal failure	■ Renew the amplifier module
U3000-4A	Control Module - Incorrect component installed	■ Diversity antenna amplifier internal incorrect component installed ■ The module has been installed to a vehicle not configured to accept it	■ Using the manufacturer approved diagnostic system select the vehicle configuration main menu, select configure existing modules menu and program the module
U3000-55	Control Module - Not configured	■ Diversity antenna amplifier not configured correctly	■ Using the manufacturer approved diagnostic system select the vehicle configuration main menu, select configure existing modules menu and program the module
U3000-87	Control Module - Missing message	■ Missing message	■ Using the manufacturer approved diagnostic system select the vehicle configuration main menu, select configure existing modules menu and program the module
U3000-98	Control Module - Component or system over temperature	■ Diversity antenna amplifier component or system over temperature	■ Consider moving the amplifier mounting position to prevent unit overheating. Cool the vehicle interior down by ensuring it is in the shade and have the A/C on cool. When cool, clear the DTC and retest. If the problem persists, renew the amplifier module

2012.0 RANGE ROVER (LM), 100-00

GENERAL INFORMATION

DESCRIPTION AND OPERATION

DRIVER/PASSENGER DOOR MODULE (DDM/PDM)

CAUTION:

Diagnosis by substitution from a donor vehicle is **NOT** acceptable. Substitution of control modules does not guarantee confirmation of a fault, and may also cause additional faults in the vehicle being tested and/or the donor vehicle

NOTES:

- If the control module or a component is suspect and the vehicle remains under manufacturer warranty, refer to the warranty policy and procedures manual, or determine if any prior approval programme is in operation, prior to the installation of a new module/component
- Generic scan tools may not read the codes listed, or may read only 5-digit codes. Match the 5 digits from the scan tool to the first 5 digits of the 7-digit code listed to identify the fault (the last 2 digits give extra information read by the manufacturer-approved diagnostic system)
- When performing voltage or resistance tests, always use a digital multimeter accurate to three decimal places and with a current calibration certificate. When testing resistance, always take the resistance of the digital multimeter leads into account
- Check and rectify basic faults before beginning diagnostic routines involving pinpoint tests
- Inspect connectors for signs of water ingress, and pins for damage and/or corrosion
- If diagnostic trouble codes are recorded and, after performing the pinpoint tests, a fault is not present, an intermittent concern may be the cause. Always check for loose connections and corroded terminals
- Where an 'on demand self-test' is referred to, this can be accessed via the 'diagnostic trouble code monitor' tab on the manufacturers approved diagnostic system
- Check DDW for open campaigns. Refer to the corresponding bulletins and SSMs which may be valid for the specific customer complaint and carry out the recommendations as required

The table below lists all Diagnostic Trouble Codes (DTCs) that could be logged in the Driver/Passenger Door Module (DDM/PDM). For additional Diagnosis and Testing information refer to the relevant Diagnosis and Testing Section.

DTC	DESCRIPTION	POSSIBLE CAUSES	ACTION
B109C-15	Front Courtesy Light - Circuit short to battery or open	▪ Short to power or open circuit	▪ Refer to the electrical circuit diagrams and test front courtesy light circuit for short to power or open circuit
B109D-11	Front Courtesy Light - Circuit short to ground	▪ Short to ground	▪ Refer to the electrical circuit diagrams and test front courtesy light circuit for short ground
B10EB-11	Driver Door Double Locking Motor - Circuit short to ground	▪ Short to ground	▪ Refer to the electrical circuit diagrams and test driver door double locking motor circuit for short ground
B10EB-15	Driver Door Double Locking Motor - Circuit short to battery or open	▪ Short to power or open circuit	▪ Refer to the electrical circuit diagrams and test driver door double locking motor circuit for short to power or open circuit
B10EC-11	Passenger Door Double Locking Motor - Circuit short to ground	▪ Short to ground	▪ Refer to the electrical circuit diagrams and test passenger door double locking motor circuit for short ground
B10EC-15	Passenger Door Double Locking Motor - Circuit short to battery or open	▪ Short to power or open circuit	▪ Refer to the electrical circuit diagrams and test passenger door double locking motor circuit for short to power or open circuit
B1108-11	Driver Door Central Locking Motor -	▪ Short to ground	▪ Refer to the electrical circuit diagrams and test driver door central locking motor circuit for short ground

	Circuit short to ground		
B1108-15	Driver Door Central Locking Motor - Circuit short to battery or open	■ Short to power or open circuit	■ Refer to the electrical circuit diagrams and test driver door central locking motor circuit for short to power or open circuit
B1109-11	Passenger Door Central Locking Motor - Circuit short to ground	■ Short to ground	■ Refer to the electrical circuit diagrams and test passenger door central locking motor circuit for short ground
B1109-15	Passenger Door Central Locking Motor - Circuit short to battery or open	■ Short to power or open circuit	■ Refer to the electrical circuit diagrams and test passenger door central locking motor circuit for short to power or open circuit
B1163-11	Left Mirror Heater Output Short To Ground - Circuit short to ground	■ Short to ground	■ Refer to the electrical circuit diagrams and test left mirror heater output circuit for short to ground
B1163-15	Left Mirror Heater Output Short To Power - Circuit short to battery or open	■ Short to power or open circuit	■ Refer to the electrical circuit diagrams and test left mirror heater output circuit for short to power or open circuit
B1164-11	Right Mirror Heater Output Short To Ground - Circuit short to ground	■ Short to ground	■ Refer to the electrical circuit diagrams and test right mirror heater output circuit for short to ground
B1164-15	Right Mirror Heater Output Short To Power - Circuit short to battery or open	■ Short to power or open circuit	■ Refer to the electrical circuit diagrams and test right mirror heater output circuit for short to power or open circuit

B1165-11	Left Front Puddle Lamp Output Short To Ground - Circuit short to ground	■ Short to ground	■ Refer to the electrical circuit diagrams and test left front puddle lamp output circuit for short to ground
B1165-15	Left Front Puddle Lamp Output Open Load Or Short To Power - Circuit short to battery or open	■ Short to power or open circuit	■ Refer to the electrical circuit diagrams and test left front puddle lamp output circuit for short to power or open circuit
B1166-11	Right Front Puddle Lamp Output Short To Ground - Circuit short to ground	■ Short to ground	■ Refer to the electrical circuit diagrams and test right front puddle lamp output circuit for short to ground
B1166-15	Right Front Puddle Lamp Output Open Load Or Short To Battery - Circuit short to battery or open	■ Short to power or open circuit	■ Refer to the electrical circuit diagrams and test right front puddle lamp output circuit for short to power or open circuit
B117E-72	Front Power Window Up - Actuator stuck open	■ Door module internal relay sticking open	■ Renew the relevant rear door module. Refer to the warranty policy and procedures manual if a module is suspect
B117E-73	Front Power Window Up - Actuator stuck closed	■ Door module internal relay sticking closed	■ Renew the relevant rear door module. Refer to the warranty policy and procedures manual if a module is suspect
B117F-72	Front Power Window Down - Actuator stuck open	■ Door module internal relay sticking open	■ Renew the relevant rear door module. Refer to the warranty policy and procedures manual if a module is suspect
B117F-73	Front Power Window Down - Actuator stuck closed	■ Door module internal relay sticking closed	■ Renew the relevant rear door module. Refer to the warranty policy and procedures manual if a module is suspect

B1189-29	Front Window Position Sensor - Signal invalid	■ Missing signal from hall sensor 1 or 2 ■ Sensor circuit fault ■ Hall sensor fault	■ Refer to the electrical circuit diagrams and check the hall sensor circuit between the door module and window motor. Repair as necessary. If the problem persists, renew the window motor
B118A-29	Rear Window Position Sensor - Signal invalid	■ Missing signal from hall sensor 1 or 2 ■ Sensor circuit fault ■ Hall sensor fault	■ Refer to the electrical circuit diagrams and check the hall sensor circuit between the door module and window motor. Repair as necessary. If the problem persists, renew the window motor
B1A94-11	Driver Mirror - Circuit short to ground	■ Short to ground	■ Refer to the electrical circuit diagrams and test driver mirror fold motor circuit for short to ground
B1A94-15	Driver Mirror - Circuit short to battery or open	■ Short to power or open circuit	■ Refer to the electrical circuit diagrams and test driver mirror fold motor circuit for short to power or open circuit
B1A95-11	Passenger Mirror - Circuit short to ground	■ Short to ground	■ Refer to the electrical circuit diagrams and test passenger mirror fold motor circuit for short to ground
B1A95-15	Passenger Mirror - Circuit short to battery or open	■ Short to power or open circuit	■ Refer to the electrical circuit diagrams and test passenger mirror fold motor circuit for short to power or open circuit
B1A98-83	LIN Bus Circuit #1 - Value of signal protection calculation incorrect	■ Value of signal protection calculation incorrect	■ Refer to the electrical circuit diagrams and test LIN circuit between driver switch pack and DDM for short/open circuits, clear DTC and re-test. If DTC remains install a new switch pack

B1A98-86	LIN Bus Circuit #1 - Signal invalid	■ Signal Invalid	■ Refer to the electrical circuit diagrams and test LIN circuit between driver switch pack and DDM for short/open circuits, clear DTC and re-test. If DTC remains install a new switch pack
B1A98-87	LIN Bus Circuit #1 - Missing message	■ Missing Message	■ Refer to the electrical circuit diagrams and test LIN circuit between driver switch pack and DDM for short/open circuits, clear DTC and re-test. If DTC remains install a new switch pack
B1C09-11	Driver Left/Right Mirror Motor Circuit - Circuit short to ground	■ Short to ground	■ Refer to the electrical circuit diagrams and test driver left /right mirror motor circuit for short to ground
B1C09-15	Driver Left/Right Mirror Motor Circuit - Circuit short to battery or open	■ Short to power or open circuit	■ Refer to the electrical circuit diagrams and test driver left /right mirror motor circuit for short to power or open circuit
B1C10-11	Driver Up/Down Mirror Motor Circuit - Circuit short to ground	■ Short to ground	■ Refer to the electrical circuit diagrams and test driver up /down mirror motor circuit for short to ground
B1C10-15	Driver Up/Down Mirror Motor Circuit - Circuit short to battery or open	■ Short to power or open circuit	■ Refer to the electrical circuit diagrams and test driver up /down mirror motor circuit for short to power or open circuit
B1C11-11	Passenger Left/Right Mirror Motor Circuit - Circuit short to ground	■ Short to ground	■ Refer to the electrical circuit diagrams and test passenger left /right mirror motor circuit for short to ground
B1C11-15	Passenger Left/Right Mirror Motor Circuit - Circuit short to	■ Short to power or open circuit	■ Refer to the electrical circuit diagrams and test passenger left /right mirror motor circuit for short to power or open circuit

	battery or open		
B1C12-11	Passenger Up/Down Mirror Motor Circuit - Circuit short to ground	■ Short to ground	■ Refer to the electrical circuit diagrams and test passenger up /down mirror motor circuit for short to ground
B1C12-15	Passenger Up/Down Mirror Motor Circuit - Circuit short to battery or open	■ Short to power or open circuit	■ Refer to the electrical circuit diagrams and test passenger up /down mirror motor circuit for short to power or open circuit
B1C13-11	Driver Up/Down Mirror Motor Feedback Circuit - Circuit short to ground	■ Short to ground	■ Refer to the electrical circuit diagrams and test driver up /down mirror motor feedback circuit for short to ground
B1C13-15	Driver Up/Down Mirror Motor Feedback Circuit - Circuit short to battery or open	■ Short to power or open circuit	■ Refer to the electrical circuit diagrams and test driver up /down mirror motor feedback circuit for short to power or open circuit
B1C14-11	Driver Left/Right Mirror Motor Feedback Circuit - Circuit short to ground	■ Short to ground	■ Refer to the electrical circuit diagrams and test driver left /right mirror motor feedback circuit for short to ground
B1C14-15	Driver Left/Right Mirror Motor Feedback Circuit - Circuit short to battery or open	■ Short to power or open circuit	■ Refer to the electrical circuit diagrams and test driver left /right mirror motor feedback circuit for short to power or open circuit
B1C15-11	Passenger Up/Down Mirror Motor Feedback Circuit - Circuit short to ground	■ Short to ground	■ Refer to the electrical circuit diagrams and test passenger up /down mirror motor feedback circuit for short to ground
B1C15-	Passenger Up/Down		

15	Mirror Motor Feedback Circuit - Circuit short to battery or open	■ Short to power or open circuit	■ Refer to the electrical circuit diagrams and test passenger up /down mirror motor feedback circuit for short to power or open circuit
B1C16-11	Passenger Left/Right Mirror Motor Feedback Circuit - Circuit short to ground	■ Short to ground	■ Refer to the electrical circuit diagrams and test passenger left /right mirror motor feedback circuit for short to ground
B1C16-15	Passenger Left/Right Mirror Motor Feedback Circuit - Circuit short to battery or open	■ Short to power or open circuit	■ Refer to the electrical circuit diagrams and test passenger left /right mirror motor feedback circuit for short to power or open circuit
C1B14-11	Sensor Supply #1 - Circuit short to ground	■ Short to ground	■ Refer to the electrical circuit diagrams and test window sensor supply circuit for short to ground
C1B14-15	Sensor Supply #1 - Circuit short to battery or open	■ Short to power or open circuit	■ Refer to the electrical circuit diagrams and test window sensor supply circuit for short to power or open circuit
U0010-00	Medium Speed CAN Communication Bus - No sub type information	■ Medium speed CAN communication Bus	■ Carry out network integrity test using manufacturer approved diagnostic system. Refer to electrical circuit diagrams and test Medium speed CAN network for open, short circuit and high resistance
U0140-00	Lost Communication With CJB - No sub type information	■ Logged when subscribed CAN message missing from CJB	■ Refer to the electrical circuit diagrams and test power and ground supplies to Central Junction Box. Check CAN network between Driver Door Module and Central Junction Box. Carry out network integrity test using manufacturer approved diagnostic system

U0208-00	Lost Communication With Driver Seat Module (DSM) - No sub type information	■ Missing message	■ Refer to the electrical circuit diagrams and test power and ground supplies to Driver Seat Module. Check CAN network between Driver Door Module and Driver Seat Module. Carry out network integrity test using manufacturer approved diagnostic system
U0300-00	Internal Control Module Software Incompatibility - No sub type information	■ Car configuration file mismatch with vehicle specification	**NOTE:** After updating the car configuration file, set the ignition to on and wait 30 seconds before clearing the DTCs ■ Using the manufacturer approved diagnostic system, check and up-date the car configuration file as necessary
U2002-24	Switch - Signal stuck high	■ Signal stuck high	■ Clear DTC and re-test. If DTC remains, install a new passenger side window switch
U2010-11	Switch Illumination - Circuit short to ground	■ Circuit short to ground	■ Carry out CAN network tests using the manufacturer approved diagnostic system
U2010-12	Switch Illumination - Circuit short to battery	■ Circuit short to power	■ Carry out CAN network tests using the manufacturer approved diagnostic system
U2012-08	Car Configuration Parameter(s) - Bus Signal/Message Failures	■ Bus signal/message failures	■ Cycle the ignition status and re-test. If DTC remains, re-configure the RJB using the manufacturer approved diagnostic system
U2013-	Switch Pack - Signal	■ Signal stuck high	

24	stuck high		■ Clear DTC and re-test. If DTC remains, install a new driver side window switch pack
U2014-44	Control Module Hardware - Data memory failure	■ Data Memory Failure	■ Install a new DDM/PDM, refer to the new module installation note at the top of the DTC Index
U2100-00	Initial Configuration Not Complete - No sub type information	■ No sub type information	■ Re-configure the DDM/PDM using the manufacturer approved diagnostic system
U3000-49	Control Module - Internal electronic failure	■ Internal electronic failure	■ Install a new DDM/PDM, refer to the new module installation note at the top of the DTC Index
U3002-55	Vehicle Identification Number (VIN) - Not configured	■ Not configured	■ Re-configure the relevant module as new using the manufacturer approved diagnostic system and re-test. If DTC remains install a new module, refer to the new module installation note at the top of the DTC Index
U3002-81	Vehicle Identification Number (VIN) - Invalid serial data received	■ Vehicle/component mis-match. Corrupt VIN data being transmitted, module previously installed to other vehicle	■ Install original module, check for DTCs and refer to relevant DTC Index
U3003-62	Battery Voltage - Signal compare failure	■ Mis-match of battery voltage, of 2 volts or lower, between DDM /PDM and RJB	■ Check vehicle battery and charging system. Refer to the relevant section in the workshop manual. Refer to the electrical circuit diagrams and check the power and ground supply circuits to both modules

2012.0 RANGE ROVER (LM), 100-00

GENERAL INFORMATION

DESCRIPTION AND OPERATION

DRIVER/PASSENGER FRONT SEAT MODULE (DSM/PSM)

CAUTION:

Diagnosis by substitution from a donor vehicle is **NOT** acceptable. Substitution of control modules does not guarantee confirmation of a fault, and may also cause additional faults in the vehicle being tested and/or the donor vehicle

NOTES:

- If the control module or a component is suspect and the vehicle remains under manufacturer warranty, refer to the warranty policy and procedures manual, or determine if any prior approval programme is in operation, prior to the installation of a new module/component
- Generic scan tools may not read the codes listed, or may read only 5-digit codes. Match the 5 digits from the scan tool to the first 5 digits of the 7-digit code listed to identify the fault (the last 2 digits give extra information read by the manufacturer-approved diagnostic system)
- When performing voltage or resistance tests, always use a digital multimeter accurate to three decimal places and with a current calibration certificate. When testing resistance, always take the resistance of the digital multimeter leads into account
- Check and rectify basic faults before beginning diagnostic routines involving pinpoint tests
- Inspect connectors for signs of water ingress, and pins for damage and/or corrosion
- If diagnostic trouble codes are recorded and, after performing the pinpoint tests, a fault is not present, an intermittent concern may be the cause. Always check for loose connections and corroded terminals
- Where an 'on demand self-test' is referred to, this can be accessed via the 'diagnostic trouble code monitor' tab on the manufacturers approved diagnostic system
- Check DDW for open campaigns. Refer to the corresponding bulletins and SSMs which may be valid for the specific customer complaint and carry out the recommendations as required

The table below lists all Diagnostic Trouble Codes (DTCs) that could be logged in the Driver Front Seat Module, for additional Diagnosis and Testing information refer to the relevant Diagnosis and Testing Section. For additional information, refer to: Seats (501-10 Seating, Diagnosis and Testing).

DTC	DESCRIPTION	POSSIBLE CAUSES	ACTION
B105D-11	Seat Bolster Inflate Output - Circuit short to ground	■ Circuit short to ground	■ Check the seat wiring harness/connectors for security/integrity. Refer to the electrical circuit diagrams and check the seat bolster circuit
B105D-15	Seat Bolster Inflate Output - Circuit short to battery or open	■ Circuit short to power or open	■ Check the seat wiring harness/connectors for security/integrity. Refer to the electrical circuit diagrams and check the seat bolster circuit
B105E-11	Seat Bolster Deflate Output - Circuit short to ground	■ Circuit short to ground	■ Check the seat wiring harness/connectors for security/integrity. Refer to the electrical circuit diagrams and check the seat bolster circuit
B105E-15	Seat Bolster Deflate Output - Circuit short to battery or open	■ Circuit short to power or open	■ Check the seat wiring harness/connectors for security/integrity. Refer to the electrical circuit diagrams and check the seat bolster circuit
B105F-11	Seat Cushion Extension Motor Output - Circuit short to ground	■ Circuit short to ground	■ Check the seat wiring harness/connectors for security/integrity. Refer to the electrical circuit diagrams and check the seat cushion extension circuit
B105F-15	Seat Cushion Extension Motor Output - Circuit	■ Circuit short to power or open	■ Check the seat wiring harness/connectors for security/integrity. Refer to the electrical circuit diagrams and check the seat cushion extension circuit

	short to battery or open		
B1060-11	Seat Headrest Motor Output - Circuit short to ground	■ Circuit short to ground	■ Check the seat wiring harness/connectors for security/integrity. Refer to the electrical circuit diagrams and check the seat headrest motor circuit
B1060-15	Seat Headrest Motor Output - Circuit short to battery or open	■ Circuit short to power or open	■ Check the seat wiring harness/connectors for security/integrity. Refer to the electrical circuit diagrams and check the seat headrest motor circuit
B1063-31	Seat Cushion Extension Motor Sensor - No signal	■ Harness /connector problem ■ No signal from sensor ■ Sensor/motor malfunction	■ Check the seat wiring harness/connectors for security/integrity ■ Refer to the electrical circuit diagrams and check the seat cushion motor sensor circuit. Repair circuit as required. Clear DTC and retest
B1064-31	Seat Headrest Motor Sensor - No signal	■ Harness /connector problem ■ No signal from sensor ■ Sensor/motor malfunction	■ Check the seat wiring harness/connectors for security/integrity ■ Refer to the electrical circuit diagrams and check the seat headrest motor sensor circuit. Repair circuit as required. Clear DTC and retest
B1065-24	Cushion Extend Switch - Signal stuck high	■ Signal stuck high	■ Check the switch function. Check the seat wiring harness/connectors for security/integrity. Refer to the electrical circuit diagrams and check the switch circuit

		■ Switch malfunction	
B1066-24	Cushion Retract Switch - Signal stuck high	■ Signal stuck high ■ Switch malfunction	■ Check the switch function. Check the seat wiring harness/connectors for security/integrity. Refer to the electrical circuit diagrams and check the switch circuit
B1067-24	Lumbar In Switch - Signal stuck high	■ Signal stuck high ■ Switch malfunction	■ Check the switch function. Check the seat wiring harness/connectors for security/integrity. Refer to the electrical circuit diagrams and check the switch circuit
B1068-24	Lumbar Out Switch - Signal stuck high	■ Signal stuck high ■ Switch malfunction	■ Check the switch function. Check the seat wiring harness/connectors for security/integrity. Refer to the electrical circuit diagrams and check the switch circuit
B1069-24	Lumbar Down Switch - Signal stuck high	■ Signal stuck high ■ Switch malfunction	■ Check the switch function. Check the seat wiring harness/connectors for security/integrity. Refer to the electrical circuit diagrams and check the switch circuit
B106A-24	Lumbar Down Switch -Signal stuck high	■ Lumbar down switch, faulty or circuit short to power	■ Check switch operation. Refer to the electrical circuit diagrams and check, lumbar down switch for fault or circuit short to power

B106B-24	Bolster Inflate Switch - Signal stuck high	■ Signal stuck high ■ Switch malfunction	■ Check the switch function. Check the seat wiring harness/connectors for security/integrity. Refer to the electrical circuit diagrams and check the switch circuit
B106C-24	Bolster Deflate Switch - Signal stuck high	■ Signal stuck high ■ Switch malfunction	■ Check the switch function. Check the seat wiring harness/connectors for security/integrity. Refer to the electrical circuit diagrams and check the switch circuit
B106D-24	Headrest Up Switch - Signal stuck high	■ Signal stuck high ■ Switch malfunction	■ Check the switch function. Check the seat wiring harness/connectors for security/integrity. Refer to the electrical circuit diagrams and check the switch circuit
B106E-24	Headrest Down Switch - Signal stuck high	■ Signal stuck high ■ Switch malfunction	■ Check the switch function. Check the seat wiring harness/connectors for security/integrity. Refer to the electrical circuit diagrams and check the switch circuit
B1087-83	LIN Bus "A" - Value of signal protection calculation incorrect	■ LIN bus checksum error ■ Value of signal protection calculation incorrect ■ Generic LIN bus failure	■ Check for other LIN Bus related DTCs. Refer to the electrical circuit diagrams and check the LIN Bus circuit

B1087-86	LIN Bus "A" - Signal invalid	■ Generic LIN bus failure ■ Signal invalid ■ LIN bus Bit error / Parity Error /Synch Error	■ Check for other LIN Bus related DTCs. Refer to the electrical circuit diagrams and check the LIN Bus circuit
B1087-87	LIN Bus "A" - Missing message	■ Generic LIN bus failure ■ Missing message ■ Slave not responding or LIN bus short circuit to ground or power	■ Check for other LIN Bus related DTCs. Refer to the electrical circuit diagrams and check the LIN Bus circuit
B1136-11	Lumbar Control A - Circuit short to ground	■ Circuit short to ground	■ Check the seat wiring harness/connectors for security/integrity. Refer to the electrical circuit diagrams and check the lumbar control circuit
B1136-12	Lumbar Control A - Circuit short to battery	■ Circuit short to power	■ Check the seat wiring harness/connectors for security/integrity. Refer to the electrical circuit diagrams and check the lumbar control circuit
B1136-13	Lumbar Control A - Circuit open	■ Circuit open circuit	■ Check the seat wiring harness/connectors for security/integrity. Refer to the electrical circuit diagrams and check the lumbar control circuit

B1137-11	Lumbar Control B - Circuit short to ground	■ Circuit short to ground	■ Check the seat wiring harness/connectors for security/integrity. Refer to the electrical circuit diagrams and check the lumbar control circuit
B1137-12	Lumbar Control B - Circuit short to battery	■ Circuit short to power	■ Check the seat wiring harness/connectors for security/integrity. Refer to the electrical circuit diagrams and check the lumbar control circuit
B1137-13	Lumbar Control B - Circuit open	■ Circuit open circuit	■ Check the seat wiring harness/connectors for security/integrity. Refer to the electrical circuit diagrams and check the lumbar control circuit
B1138-11	Lumbar Control C - Circuit short to ground	■ Circuit short to ground	■ Check the seat wiring harness/connectors for security/integrity. Refer to the electrical circuit diagrams and check the lumbar control circuit
B1138-12	Lumbar Control C - Circuit short to battery	■ Circuit short to power	■ Check the seat wiring harness/connectors for security/integrity. Refer to the electrical circuit diagrams and check the lumbar control circuit
B1138-13	Lumbar Control C - Circuit open	■ Circuit open circuit	■ Check the seat wiring harness/connectors for security/integrity. Refer to the electrical circuit diagrams and check the lumbar control circuit
B1139-11	Lumbar Control D - Circuit short to ground	■ Circuit short to ground	■ Check the seat wiring harness/connectors for security/integrity. Refer to the electrical circuit diagrams and check the lumbar control circuit
B1139-12	Lumbar Control D - Circuit short to battery	■ Circuit short to power	■ Check the seat wiring harness/connectors for security/integrity. Refer to the electrical circuit diagrams and check the lumbar control circuit
B1139-13	Lumbar Control D - Circuit open	■ Circuit open circuit	■ Check the seat wiring harness/connectors for security/integrity. Refer to the electrical circuit diagrams and check the lumbar control circuit

B113A-00	General Failure on Seat Lumbar - No sub type information	■ No sub type information	■ Check the seat wiring harness/connectors for security/integrity. Refer to the electrical circuit diagrams and check the lumbar control circuit
B113B-00	Lumbar Control Multiple Failures - No sub type information	■ No sub type information	■ Check the seat wiring harness/connectors for security/integrity. Refer to the electrical circuit diagrams and check the lumbar control circuit
B131C-11	Rear Seat Recline Motor Relay Control - Circuit short to ground	■ Related internal feedback line not set while output is activated. Output is protected ■ Rear seat recline motor circuit short to ground	■ Refer to the electrical circuit diagrams and check rear seat recline motor circuit for short to ground. Check and install a new rear seat recline motor relay as required
B131C-15	Rear Seat Recline Motor Relay Control - Circuit short to battery or open	■ Related internal feedback line not set while output is activated. Output is protected ■ Rear seat recline motor	■ Refer to the electrical circuit diagrams and check rear seat recline motor circuit for short to power, open circuit. Check and install a new rear seat recline motor relay as required

		circuit short to power, open circuit	
B131D-31	Rear Seat Recline Motor Speed/ Position Sensor - No signal	■ Harness /connector problem ■ No signal from sensor ■ Sensor/motor malfunction	■ Check the rear seat wiring harness/connectors for security/integrity ■ Refer to the electrical circuit diagrams and check the rear seat recline motor sensor circuit. Repair circuit as required. Clear DTC and retest
B1332-87	Drivers Side Rear Seat Switch Pack - Missing message	■ Slave not responding ■ LIN bus short circuit to ground, short to power	■ Refer to electrical circuit diagrams and test LIN Bus between passengers side rear seat switch-pack and control module for open circuit, short to power or ground. Check power and ground supplies to switch-pack
B1333-02	Passengers Side Rear Seat switch-pack - General signal failure	■ Switch status (on/off). Switch detected as active for more than 30sec	■ Check switch-pack for inadvertently pressed or stuck buttons. Check and install a new passengers side rear seat switch-pack as required
B1333-87	Passengers Side Rear Seat switch-pack - Missing message	■ Slave not responding ■ LIN bus short circuit to	■ Refer to electrical circuit diagrams and test LIN Bus between passengers side rear seat switch-pack and control module for open circuit, short to power or ground. Check power and ground supplies to switch-pack

		ground, short to power	
B1B86-11	Seat Height Motor Relay - Circuit short to ground	■ Circuit short to ground	■ Check the seat wiring harness/connectors for security/integrity. Refer to the electrical circuit diagrams and check the seat height motor circuit
B1B86-15	Seat Height Motor Relay - Circuit short to battery or open	■ Circuit short to power or open	■ Check the seat wiring harness/connectors for security/integrity. Refer to the electrical circuit diagrams and check the seat height motor circuit
B1B87-31	Seat Height Motor Speed /Position Sensor - No signal	■ Harness /connector problem ■ No signal from sensor ■ Sensor/motor malfunction	■ Check the seat wiring harness/connectors for security/integrity ■ Refer to the electrical circuit diagrams and check the seat height motor sensor circuit. Repair circuit as required. Clear DTC and retest
B1B88-11	Seat Slide Motor Relay - Circuit short to ground	■ Circuit short to ground	■ Check the seat wiring harness/connectors for security/integrity. Refer to the electrical circuit diagrams and check the seat slide motor relay circuit
B1B88-15	Seat Slide Motor Relay - Circuit short to battery or open	■ Circuit short to power or open circuit	■ Check the seat wiring harness/connectors for security/integrity. Refer to the electrical circuit diagrams and check the seat slide motor relay circuit
B1B89-31	Seat Slide Motor Speed/Position Sensor - No signal	■ Harness /connector problem	■ Check the seat wiring harness/connectors for security/integrity ■ Refer to the electrical circuit diagrams and check the seat slide motor speed sensor circuit. Repair circuit as required. Clear DTC and retest

		■ No signal from sensor ■ Sensor/motor malfunction	
B1B90-11	Seat Tilt Motor Relay - Circuit short to ground	■ Circuit short to ground	■ Check the seat wiring harness/connectors for security/integrity. Refer to the electrical circuit diagrams and check the seat tilt motor relay circuit
B1B90-15	Seat Tilt Motor Relay - Circuit short to battery or open	■ Circuit short to power or open circuit	■ Check the seat wiring harness/connectors for security/integrity. Refer to the electrical circuit diagrams and check the seat tilt motor relay circuit
B1B91-31	Seat Tilt Motor Speed/Position Sensor - No signal	■ Harness /connector problem ■ No signal from sensor ■ Sensor/motor malfunction	■ Check the seat wiring harness/connectors for security/integrity ■ Refer to the electrical circuit diagrams and check the seat tilt motor speed sensor circuit. Repair circuit as required. Clear DTC and retest
B1B92-11	Seat Recline Motor Relay - Circuit short to ground	■ Circuit short to ground	■ Check the seat wiring harness/connectors for security/integrity. Refer to the electrical circuit diagrams and check the seat recline motor relay circuit
B1B92-15	Seat Recline Motor Relay - Circuit short to battery or open	■ Circuit short to power or open circuit	■ Check the seat wiring harness/connectors for security/integrity. Refer to the electrical circuit diagrams and check the seat recline motor relay circuit
B1B93-	Seat Recline		■ Check the seat wiring harness/connectors for security/integrity

31	Motor Speed /Position Sensor - No signal	■ Harness /connector problem ■ No signal from sensor ■ Sensor/motor malfunction	■ Refer to the electrical circuit diagrams and check the seat recline motor speed sensor circuit. Repair circuit as required. Clear DTC and retest
B1B94-24	Seat Height Up Switch - Signal stuck high	■ Signal stuck high ■ Switch malfunction	■ Check the switch function. Check the seat wiring harness/connectors for security/integrity. Refer to the electrical circuit diagrams and check the switch circuit
B1B95-24	Seat Height Down Switch - Signal stuck high	■ Signal stuck high ■ Switch malfunction	■ Check the switch function. Check the seat wiring harness/connectors for security/integrity. Refer to the electrical circuit diagrams and check the switch circuit
B1B96-24	Seat Slide Forward Switch - Signal stuck high	■ Signal stuck high ■ Switch malfunction	■ Check the switch function. Check the seat wiring harness/connectors for security/integrity. Refer to the electrical circuit diagrams and check the switch circuit
B1B97-24	Seat Slide Backward Switch - Signal stuck high	■ Signal stuck high ■ Switch malfunction	■ Check the switch function. Check the seat wiring harness/connectors for security/integrity. Refer to the electrical circuit diagrams and check the switch circuit
B1B98-	Seat Tilt Up		

24	Switch - Signal stuck high	■ Signal stuck high ■ Switch malfunction	■ Check the switch function. Check the seat wiring harness/connectors for security/integrity. Refer to the electrical circuit diagrams and check the switch circuit
B1B99-24	Seat Tilt Down Switch - Signal stuck high	■ Signal stuck high ■ Switch malfunction	■ Check the switch function. Check the seat wiring harness/connectors for security/integrity. Refer to the electrical circuit diagrams and check the switch circuit
B1C00-24	Seat Recline Up Switch - Signal stuck high	■ Signal stuck high ■ Switch malfunction	■ Check the switch function. Check the seat wiring harness/connectors for security/integrity. Refer to the electrical circuit diagrams and check the switch circuit
B1C01-24	Seat Recline Down Switch - Signal stuck high	■ Seat recline down switch, faulty or circuit short to power	■ Check switch operation. Refer to the electrical circuit diagrams and check, seat recline down switch for fault or circuit short to power
B1C02-24	Memory Store Switch - Signal stuck high	■ Memory store switch, faulty or circuit short to power	■ Check switch operation. Refer to the electrical circuit diagrams and check, memory Store switch for fault or circuit short to power
B1C03-24	Memory #1 Switch - Signal stuck high	■ Memory #1 switch, faulty or circuit short to power	■ Check switch operation. Refer to the electrical circuit diagrams and check, memory #1 switch for fault or circuit short to power

B1C04-24	Memory #2 Switch - Signal stuck high	■ Memory #2 switch, faulty or circuit short to power	■ Check switch operation. Refer to the electrical circuit diagrams and check, memory #2 switch for fault or circuit short to power
B1C05-24	Memory #3 Switch - Signal stuck high	■ Memory #3 switch, faulty or circuit short to power	■ Check switch operation. Refer to the electrical circuit diagrams and check, memory #3 switch for fault or circuit short to power
B1C10-24	Seat Recline Down Switch - Signal stuck high	■ Signal stuck high ■ Switch malfunction	■ Check the switch function. Check the seat wiring harness/connectors for security/integrity. Refer to the electrical circuit diagrams and check the switch circuit
B1D94-11	Lumbar Motor Relay - Circuit short to ground	■ Circuit short to ground	■ Check the seat wiring harness/connectors for security/integrity. Refer to the electrical circuit diagrams and check the seat lumbar motor relay circuit
B1D94-15	Lumbar Motor Relay - Circuit short to battery or open	■ Circuit short to power or open circuit	■ Check the seat wiring harness/connectors for security/integrity. Refer to the electrical circuit diagrams and check the seat lumbar motor relay circuit
U0010-88	Medium speed CAN Communication Bus - Bus off	■ CAN signal fault ■ Possible open circuit ■ Faulty Control module	■ Refer to the electrical circuit diagrams and check the power and ground connections to the module. Using the manufacturer approved diagnostic system, complete a CAN network integrity test. Refer to the electrical circuit diagrams and check the CAN network

U0140-00	Lost Communication With Body Control Module - No sub type information	■ No sub type information	■ Refer to the electrical circuit diagrams and check the power and ground connections to the module. Using the manufacturer approved diagnostic system, complete a CAN network integrity test. Refer to the electrical circuit diagrams and check the CAN network between the Central Junction Box and Seat Module
U0142-00	Lost Communication With Body Control Module "B" - No sub type information	■ No sub type information	■ Refer to the electrical circuit diagrams and check the power and ground connections to the module. Using the manufacturer approved diagnostic system, complete a CAN network integrity test. Refer to the electrical circuit diagrams and check the CAN network between the Central Junction Box and Seat Module
U0155-00	Lost Communication With Instrument Panel Cluster (IPC) Control Module - No sub type information	■ No sub type information	■ Refer to the electrical circuit diagrams and check the power and ground connections to the module. Using the manufacturer approved diagnostic system, complete a CAN network integrity test. Refer to the electrical circuit diagrams and check the CAN network between the Instrument Cluster and Seat Module
U0199-00	Lost Communication With "Door Control Module A" - No sub type information	■ No sub type information	■ Refer to the electrical circuit diagrams and check the power and ground connections to the module. Using the manufacturer approved diagnostic system, complete a CAN network integrity test. Refer to the electrical circuit diagrams and check the CAN network between the Driver Door Module and Seat Module
U0209-00	Lost Communication With Seat Control Module B - No sub type information	■ Power supply fault ■ Wiring harness fault	■ No passenger's seat climate functionality. Using the manufacturer approved diagnostic system, complete a CAN network integrity test. Refer to the electrical circuit diagrams and check the CAN network between the passenger's seat control module and the Touch Screen Display Control Module. Refer to the electrical circuit diagrams and check the power and ground connections to the passenger's seat control module

U0300-00	Software Incompatibility - No sub type information	■ No sub type information	■ Check the module configuration using the approved diagnostic system. Check that the module software versions are the latest release and update as necessary
U1A14-49	CAN Initialization Failure - Internal electronic failure	■ Internal electronic failure	■ Suspect the driver seat module, check and install a new module as required, refer to the Warranty Policy and Procedures manual if a module is suspect
U1A4C-00	Build / End of Line mode Active - No sub type information	■ Vehicle configuration incorrect	■ Check the module configuration using the approved diagnostic system
U2100-00	Initial Configuration Not Complete - No sub type information	■ Incorrect Car Configuration File (CCF)	■ Check Car Configuration File (CCF) is correct. Ensure all the correct seat options are enabled/disabled as required. Clear the DTC and re-test. Clear the DTC and re-test
U2101-00	Control Module Configuration Incompatible - No sub type information	■ Incorrect Car Configuration File (CCF)	■ Check Car Configuration File (CCF) is correct. Ensure all the correct seat options are enabled/disabled as required. Clear the DTC and re-test. Clear the DTC and re-test
U3000-49	Control Module - Internal electronic failure	■ Internal electronic failure ■ Internal RAM/ROM error	■ Renew the Control module. Refer to the Warranty Policy and Procedures manual if a module is suspect
U3001-	Control Module		

46	Improper Shutdown - Calibration /parameter memory failure	■ Event information	■ DTC for information only. Clear the DTC and retest. If the problem persists, renew the module. Refer to the warranty policies and procedures before renewing a control module
U3002-81	Vehicle Identification Number - Invalid serial data received	■ Invalid serial data received	■ Configure the module using the manufacturers approved diagnostic system
U3003-16	Battery Voltage - Circuit voltage below threshold	■ Battery voltage below threshold (8 volts)	■ Check vehicle battery and charging system. Refer to the relevant section in the workshop manual. Refer to the electrical circuit diagrams and check the power supply circuits to the module
U3003-17	Battery Voltage - Circuit voltage above threshold	■ Battery voltage above threshold	■ Check vehicle battery and charging system. Refer to the relevant section in the workshop manual. Refer to the electrical circuit diagrams and check the power supply circuits to the module

2012.0 RANGE ROVER (LM), 100-00

GENERAL INFORMATION

DESCRIPTION AND OPERATION

DUAL VIEW TOUCH SCREEN (FEM)

CAUTION:

Diagnosis by substitution from a donor vehicle is **NOT** acceptable. Substitution of control modules does not guarantee confirmation of a fault, and may also cause additional faults in the vehicle being tested and/or the donor vehicle.

NOTES:

- If a control module or a component is suspect and the vehicle remains under manufacturer warranty, refer to the Warranty Policy and Procedures manual, or determine if any prior approval programme is in operation, prior to the installation of a new module/component.
- Generic scan tools may not read the codes listed, or may read only 5-digit codes. Match the 5 digits from the scan tool to the first 5 digits of the 7-digit code listed to identify the fault (the last 2 digits give extra information read by the manufacturer-approved diagnostic system).
- When performing voltage or resistance tests, always use a digital multimeter accurate to three decimal places, and with an up-to-date calibration certificate. When testing resistance always take the resistance of the digital multimeter leads into account.
- Check and rectify basic faults before beginning diagnostic routines involving pinpoint tests.
- Inspect connectors for signs of water ingress, and pins for damage and/or corrosion.
- If DTCs are recorded and, after performing the pinpoint tests, a fault is not present, an intermittent concern may be the cause. Always check for loose connections and corroded terminals.
- Check DDW for open campaigns. Refer to the corresponding bulletins and SSMs which may be valid for the specific customer complaint and carry out the recommendations as required.

The table below lists all Diagnostic Trouble Codes (DTCs) that could be logged in the Dual View Touch Screen (FEM). For additional diagnosis and testing information, refer to the relevant Diagnosis and Testing section in the workshop manual.
For additional information, refer to: Information and Entertainment System (415-00, Diagnosis and Testing).

DTC	DESCRIPTION	POSSIBLE CAUSES	ACTION
B100F-25	Video Input "B" - Signal shape /waveform failure	■ Rear proximity camera video input disconnected ■ Camera malfunction	■ Check the video signal connection and whether it is being broadcasted. Where available, configure the rear/proximity cameras using the approved diagnostic system. Check whether the rear/proximity cameras are broadcasting an image by entering touch screen diagnostics selecting 'Video Input Test' then press 'Rear View/Proximity Camera'. Check whether a clear image is displayed. Refer to the electrical circuit diagrams and check the video signal circuit between the rear/proximity cameras and the camera control module ■ If the problem persists, renew the camera or cameras. Clear the DTC and perform an on demand self test
B1010-25	Video Input "C" - Signal shape /waveform failure	■ Television/Rear seat entertainment video input disconnected ■ TV/DVD malfunction	■ Check the video signal connection and whether it is being broadcasted. Where available, configure the TV or DVD using the manufacturers approved diagnostic system. Check whether the TV or rear seat entertainment module (RSE) is broadcasting an image by entering diagnostics selecting 'Video Input Test' then press 'TV/DVD'. Check whether a clear image is displayed. Refer to the electrical circuit diagrams and check the video signal circuit from the TV or rear seat entertainment (RSE) module ■ If the problem persists, renew the television or rear seat entertainment module (RSE) or DVD module. Refer to the warranty policy and procedures manual, or determine if any prior approval programme is in operation, prior to the installation of a new module/component
B108E-14	Display - Circuit short to ground or open	■ Internal display circuit short circuit to ground, open circuit	■ Clear the DTC, switch off the ignition and allow sufficient time for the infotainment relay to power down. If the DTC persists contact dealer technical support (DTS)

B108E-17	Display - Circuit voltage above threshold	■ Internal display circuit short circuit to ground, open circuit	■ Clear the DTC, switch off the ignition and allow sufficient time for the infotainment relay to power down. If the DTC persists contact dealer technical support (DTS)
B108E-1C	Display - Circuit voltage out of range	■ Internal display circuit short circuit to ground, open circuit	■ Clear the DTC, switch off the ignition and allow sufficient time for the infotainment relay to power down. If the DTC persists contact dealer technical support (DTS)
B108E-87	Display - Missing message	■ Display communication failure	■ Clear the DTC and switch off the ignition. Allow sufficient time for the infotainment relay to power down and retest. If DTC persists reprogram the front entertainment module (FEM)
B108E-88	Display - Bus off	■ Bus off ■ Front entertainment module (FEM) internal failure	■ Clear the DTC and switch off the ignition. Allow sufficient time for the infotainment relay to power down and retest. If DTC persists renew the front entertainment module (FEM). Refer to the warranty policy and procedures manual, or determine if any prior approval programme is in operation, prior to the installation of a new module/component
B119F-11	GPS Antenna - Circuit short to ground	■ Global Positioning System (GPS) antenna circuit short circuit to ground	■ Check the global positioning system (GPS) [blue] connector to the front entertainment module (FEM) for security and integrity. Check that the GPS antenna is not damaged. Refer to the electrical circuit diagrams and check the circuit between the GPS antenna and the front entertainment module (FEM). Test the GPS outside in open space for more than 2 minutes after power on. Enter touch screen diagnostics and select ‘Next’, ‘Vehicle Information’ then 'GPS Information'. Check that HDOP is less than 5 and GPS satellites show more than 4 ‘P’s
B119F-13	GPS Antenna - Circuit open	■ Antenna circuit open circuit	■ Check the global positioning system (GPS) [blue] connector to the front entertainment module (FEM) for security and integrity. Check that the GPS

		▪ Antenna not connected	antenna is not damaged. Refer to the electrical circuit diagrams and check the circuit between the GPS antenna and the front entertainment module (FEM). Test the GPS outside in open space for more than 2 minutes after power on. Enter touch screen diagnostics and select 'Next', 'Vehicle Information' then 'GPS Information'. Check that HDOP is less than 5 and GPS satellites show more than 4 'P's
B11A3-49	Gyroscope - Internal electronic failure	▪ Internal gyroscope failure	▪ Enter touch screen diagnostics and select 'Next', 'Vehicle information' then 'Vehicle sensor'. Check that the Gyro sensor voltage is around 2500mV when stationary, but changes along the bearing when the car is moving while turning the steering wheel. If the Gyro sensor voltage or bearing does not change when the car is moving while turning the steering wheel renew the front entertainment module (FEM). Refer to the warranty policy and procedures manual, or determine if any prior approval programme is in operation, prior to the installation of a new module/component
B121B-13	Keypad Input Switch - Circuit open	▪ Touch screen display input key circuit open circuit ▪ Touch screen display input key fault	▪ Check whether the input keys are working by entering the touch screen diagnostics and selecting 'Hard Key Test'. If one or more of the input keys do not respond (except audio off) renew the front entertainment module. Refer to the warranty policy and procedures manual, or determine if any prior approval programme is in operation, prior to the installation of a new module/component
B121C-13	Hard Drive - Circuit open	▪ Module internal hard drive open circuit/not connected	▪ Check whether the Hard Drive is connected by entering the touch screen diagnostics selecting 'Next' then 'HDD Information'. Check that the hard drive serial number, operating time and model name appear. If the SMART test fails 'NG' renew the front entertainment module (FEM). Refer to the warranty policy and procedures manual, or determine if any prior approval programme is in operation, prior to the installation of a new module /component
B121C-	Hard Drive -		

44	Data memory failure	■ Internal hard drive data memory failure	■ Check whether the Hard Drive is connected by entering the touch screen diagnostics selecting 'Next' then 'HDD Information'. Check that the hard drive serial number, operating time and model name appear. If the SMART test fails 'NG' renew the front entertainment module (FEM). Refer to the warranty policy and procedures manual, or determine if any prior approval programme is in operation, prior to the installation of a new module /component
B1D55-14	Antenna #2 - Circuit short to ground or open	**NOTE:** - This DTC is always set after the On Demand Self Test (ODST) has been run. Ignore this DTC, if this is the only DTC set ■ Antenna disconnected ■ Antenna circuit short circuit to ground ■ Antenna circuit open circuit	■ Check that the traffic message (TMC) connector is connected to the Dual View Touch Screen and the TMC antenna or circuit is not damaged. Where an approved diagnostic system is available, enter diagnostics and select 'RDS-TMC Information'. Check the date/time and frequency is shown
B1D56-14	Antenna #3 - Circuit short to	■ Vehicle information and	■ Enter touch screen diagnostics and select 'Next', 'Vehicle information', 'VICS' then 'Radio Wave Beacon' and 'Infrared beacon'. Check that Time

	ground or open	communication antenna (VICS) disconnected ■ Vehicle information and communication antenna (VICS) circuit short circuit to ground, open circuit	and Beacon number data are shown. Check that the vehicle information and communication system (VICS) antenna or circuit is not damaged ■ Refer to the electrical circuit diagrams and check the circuit between the vehicle information and communication system (VICS) antenna and the front entertainment module (FEM) for short to ground, open circuit
U1A01-56	Communication Link - Invalid /incomplete configuration	■ Internal communication failure	■ Clear the DTC, switch off the ignition and allow sufficient time for the infotainment relay to power down. If the DTC persists reprogram the front entertainment module (FEM) ■ If DTC still persists renew the front entertainment module. Refer to the warranty policy and procedures manual, or determine if any prior approval programme is in operation, prior to the installation of a new module /component
U1A4B-82	Control Module Processor B - Alive/sequence counter incorrect / not updated	■ Internal communication failure	■ Clear the DTC, switch off the ignition and allow sufficient time for the infotainment relay to power down. Enter touch screen diagnostics and select 'Configurations'. Check that the vehicle type is displayed and the sub CPU SW version are shown. If the DTC persists reprogram the front entertainment module (FEM). Refer to the warranty policy and procedures manual, or determine if any prior approval programme is in operation, prior to the installation of a new module/component
U1A4B-87	Control Module Processor B - Missing message	■ Internal communication failure	■ Clear the DTC, switch off the ignition and allow sufficient time for the infotainment relay to power down. Re-configure the front entertainment module (FEM) using the manufacturers approved diagnostic system ■ If DTC persists renew the front entertainment module (FEM). Refer to the warranty policy and procedures manual, or determine if any prior approval

			programme is in operation, prior to the installation of a new module /component
U2005-62	Vehicle Speed - Signal compare failure	■ Vehicle speed and calculated GPS system vehicle speed mismatch ■ Vehicle speed signal circuit between Anti-Lock Braking (ABS) Module and Navigation System Module (NAV) short to ground, short to power	■ Check the Anti-Lock Braking (ABS) Module connector and wiring harness. Using the manufacturer approved diagnostic system, enter diagnostics and select 'Vehicle Signals'. Check that the vehicle speeds both increase when the car is moving ■ Refer to the electrical circuit diagrams and check vehicle speed signal circuit between the Anti-Lock Braking (ABS) Module and Navigation System Module (NAV) for short to ground, short to power, open circuit
U2101-00	Control Module Configuration Incompatible - No sub type information	■ Car configuration file (CCF) parameter mismatch ■ Invalid /incomplete configuration	■ Enter touch screen diagnostics and select ‘Self Test’ and wait for the test results to complete. The car configuration file (CCF) mismatch parameter (s) will be listed in the description with DTC ‘U210100’. The car configuration file (CCF) parameters values for Brand, HLDF, MMMType, Navigation, MMMJapan, MMMFitted, MMMVariant, NavRegion, MMM3, VICS, GPSReceiver, Intercom, ParkingAidDisplay, HandOfDrive or AmbientLight can be found by entering the touch screen diagnostics ‘Vehicle Configurations’ and pressing ‘Next’ until the parameter is shown. Contact dealer technical support (DTS) reporting the Car Configuration (CCF) parameter name and value ■ Contact dealer technical support to assist in re-configuring the car configuration file (CCF) using the manufacturers approved diagnostic system. Clear the DTC, switch off the ignition and allow sufficient time for the infotainment relay to power down

U2101-4A	Control Module Configuration Incompatible - Incorrect component installed	■ Navigation map license mismatch ■ Invalid /incomplete configuration	**NOTE:** - If multiple maps are installed clear the DTC. No further action is required ■ If the map screen is not shown after entering diagnostics and pressing 'I Agree' then start routine 0x6024 'Update Map Configuration' with option 0x03. Allow 30 seconds for the routine to complete before entering the map screen. If a map screen is still not shown contact dealer technical support (DTS) ■ Enter the navigation menu and select 'Map changer'. Check that the map regions match the front entertainment module market. The car configuration file parameters values for Map Configuration can be found by entering the touch screen diagnostics 'Vehicle Configurations' and pressing 'Next' until the parameter is shown. Contact dealer technical support (DTS) to assist in re-configuring the car configuration file (CCF) for the map market using the manufacturers approved diagnostic system. Clear the DTC, switch off the ignition and allow sufficient time for the infotainment relay to power down
U210A-85	Temperature Sensor - Signal above allowable range	■ Front entertainment module (FEM) over temperature ■ Interior cabin over heating	■ Cool the vehicle interior down by ensuring it is in the shade and have the A /C on cool. Enter touch screen diagnostics and select 'Vehicle Signals'. Check the media orientated system transport (MOST) FOT temperature ■ When cool, clear the DTC and retest
U3003-17	Battery Voltage - Circuit voltage above	■ Battery voltage above 16 volts	■ Check vehicle battery and charging system. Refer to the relevant section in the workshop manual. Refer to the electrical circuit diagrams and check the power supply circuits to the module

	threshold		

2012.0 RANGE ROVER (LM), 100-00

GENERAL INFORMATION

DESCRIPTION AND OPERATION

ENGINE CONTROL MODULE (PCM) - 5.0L

CAUTION:

Diagnosis by substitution from a donor vehicle is **NOT** acceptable. Substitution of control modules does not guarantee confirmation of a fault, and may also cause additional faults in the vehicle being tested and/or the donor vehicle

NOTES:

- If the control module or a component is suspect and the vehicle remains under manufacturer warranty, refer to the warranty policy and procedures manual, or determine if any prior approval programme is in operation, prior to the installation of a new module/component
- Generic scan tools may not read the codes listed, or may read only 5-digit codes. Match the 5 digits from the scan tool to the first 5 digits of the 7-digit code listed to identify the fault (the last 2 digits give extra information read by the manufacturer-approved diagnostic system)
- When performing voltage or resistance tests, always use a digital multimeter accurate to three decimal places and with a current calibration certificate. When testing resistance, always take the resistance of the digital multimeter leads into account
- Check and rectify basic faults before beginning diagnostic routines involving pinpoint tests
- Inspect connectors for signs of water ingress, and pins for damage and/or corrosion
- If diagnostic trouble codes are recorded and, after performing the pinpoint tests, a fault is not present, an intermittent concern may be the cause. Always check for loose connections and corroded terminals
- Where an 'on demand self-test' is referred to, this can be accessed via the 'diagnostic trouble code monitor' tab on the manufacturers approved diagnostic system
- Check DDW for open campaigns. Refer to the corresponding bulletins and SSMs which may be valid for the specific customer complaint and carry out the recommendations as required

The table below lists all Diagnostic Trouble Codes (DTCs) that could be logged in the Engine Control Module, for additional Diagnosis and Testing information refer to the relevant Diagnosis and Testing Section. For additional information, refer to: Electronic Engine Controls (303-14A Electronic Engine Controls - V8 5.0L Petrol, Diagnosis and Testing).

DTC	DESCRIPTION	POSSIBLE CAUSES	ACTION
B10A2-31	Crash Input - No signal	**NOTE:** - Circuit SRS_SIGNAL - ■ Loss of communication between restraints control module and engine control module	■ Refer to the electrical circuit diagrams and check restraints control module pulse width modulated SRS signal line circuit, hard wired connection between engine control module and restraints control module for short circuit to ground, short circuit to power, open circuit. Repair circuit as required, clear the DTC and retest
B10AC-81	Cruise Control Switch - Invalid serial data received	■ The engine control module has received an invalid command from the steering wheel switch pack	■ Clear the DTC and press all the steering wheel switches, re-check for DTCs. Refer to the electrical circuit diagrams and check the speed control switch circuit for open circuit, short circuit to power, short circuit to ground, disconnected ■ Check and install a new steering wheel module as required. Refer to the warranty policy and procedures manual, or determine if any prior approval programme is in operation, prior to the installation of a new module /component

B10AC-82	Cruise Control Switch - Alive / sequence counter incorrect / not updated	■ Cruise buttons alive counter is not incrementing. Which suggests that the LIN bus is faulty ■ Steering wheel module is not connected ■ Steering wheel module failure	■ Refer to the electrical circuit diagrams and check the speed control switch circuit for open circuit, short circuit to power, short circuit to ground, disconnected ■ Refer to the electrical circuit diagrams and check the LIN bus between steering wheel module and the CAN gateway ■ Check and install a new steering wheel module as required. Refer to the warranty policy and procedures manual, or determine if any prior approval programme is in operation, prior to the installation of a new module /component
B10AC-83	Cruise Control Switch - Value of signal protection calculation incorrect	■ Cruise buttons checksum incorrect, incorrect cruise switches fitted to vehicle	■ Check and install new cruise switches as required. Refer to the warranty policy and procedures manual, or determine if any prior approval programme is in operation, prior to the installation of a new module/component
B10AC-96	Cruise Control Switch - Component internal failure	■ Speed control switch circuit, open circuit, short circuit to power, short circuit to ground, disconnected ■ Speed control switch failure ■ Steering wheel module failure	■ Check for related DTCs in other central junction boxes ■ Refer to the electrical circuit diagrams and check the speed control switch circuit for open circuit, short circuit to power, short circuit to ground, disconnected

			■ Check and install a new speed control switch as required. Check and install a new steering wheel module as required. Refer to the warranty policy and procedures manual, or determine if any prior approval programme is in operation, prior to the installation of a new module/component
B10FF-68	Ignition Control - Event information	■ Spark plug(s) fault ■ Wiring harness fault ■ Ignition coil(s) fault	■ Refer to repair manual and check spark plug(s) for condition and security. Replace any defective components as required ■ Refer to electrical wiring diagrams and check ignition coil circuit for intermittent open circuit, short circuit to power, short circuit to ground ■ Check and install a new coil(s) as required. Refer to the warranty policy and procedures manual, or determine if any prior approval programme is in operation, prior to the installation of a new module/component
B11DB-01	Battery Monitoring Module - General electrical failure	△ NOTE: - Circuit BATTERY - ■ Charging system fault ■ Battery monitoring signal line circuit fault	■ Refer to electrical wiring diagrams and check charging system for faults. Perform any repairs required ■ Refer to the electrical wiring diagrams and check the battery monitoring system module circuit for open circuit, short circuit to ground, short circuit to power

		■ Vehicle battery fault	■ Refer to the workshop manual and the battery care manual, inspect the vehicle battery and ensure it is fully charged and serviceable before performing further tests
B11DB-87	Battery Monitoring Module - Missing message	**NOTE:** - Circuit BATTERY - ■ Battery signal line circuit fault	■ Refer to the electrical wiring diagrams and check the battery monitoring system module circuit for open circuit, short circuit to ground, short circuit to power ■ Refer to the electrical circuit diagrams and check the LIN circuit for short circuit to ground, short circuit to power, open circuit
B1206-68	Crash Occurred - Event information	**NOTE:** - Circuit SRS_SIGNAL - ■ Engine control module has detected the vehicle has crashed - event information DTC only	■ Refer to the electrical circuit diagrams and check the engine control module to restraints control module circuit for short circuit to ground, short circuit to power, open circuit. Repair circuit as required, clear the DTC and retest
C0031-00	Left Front Wheel Speed Sensor - No sub type information	■ Invalid data received from anti-lock braking system module - left front wheel speed signal fault	■ Check anti-lock braking system module for related DTCs and refer to relevant DTC index
C0034-00	Right Front Wheel Speed	■ Invalid data received from anti-lock braking system module - right front wheel speed signal fault	

	Sensor - No sub type information		■ Check anti-lock braking system module for related DTCs and refer to relevant DTC index
C0037-00	Left Rear Wheel Speed Sensor - No sub type information	■ Invalid data received from anti-lock braking system module - left rear wheel speed signal fault	■ Check anti-lock braking system module for related DTCs and refer to relevant DTC index
C003A-00	Right Rear Wheel Speed Sensor - No sub type information	■ Invalid data received from anti-lock braking system module - right rear wheel speed signal fault	■ Check anti-lock braking system module for related DTCs and refer to relevant DTC index
P0010-13	Intake (A) Camshaft Position Actuator (Bank 1) - Circuit open	**NOTE:** - Circuit VFS_IN_A - ■ Intake (A) camshaft position actuator (Bank 1) open circuit ■ Engine control module interface harness open circuit	■ Refer to the electrical circuit diagrams and check intake (A) camshaft position actuator (Bank 1) circuit for open circuit ■ Refer to the electrical circuit diagrams and check engine control module interface harness for open circuit
P0011-00	Intake (A) Camshaft Position Timing - Over-Advanced	**NOTE:** - Circuit VFS_IN_A -	■ Refer to the electrical circuit diagrams and check intake (A) camshaft position actuator (Bank 1) circuit for open circuit ■ Refer to the electrical circuit diagrams and check engine control module interface harness for open circuit

	(Bank 1) - No sub type information	■ Intake (A) camshaft position actuator (Bank 1) open circuit ■ Engine control module interface harness open circuit	
P0013-13	Exhaust (B) Camshaft Position Actuator (Bank 1) - Circuit open	NOTE: - Circuit VFS_EX_A - ■ Exhaust (B) camshaft position actuator (Bank 1) open circuit ■ Engine control module interface harness open circuit	■ Refer to the electrical circuit diagrams and check exhaust (B) camshaft position actuator (Bank 1) circuit for open circuit ■ Refer to the electrical circuit diagrams and check engine control module interface harness for open circuit
P0015-00	Exhaust (B) Camshaft Position Timing - Over-Retarded (Bank 1) - No sub type information	NOTE: - Circuit VFS_EX_A - ■ Exhaust (B) camshaft position actuator (Bank 1) open circuit, short circuit to ground, short circuit to power	■ Check for related DTC P0365-00. Refer to the electrical circuit diagrams and check exhaust (B) camshaft position actuator (Bank 1) for open circuit, short circuit to ground, short circuit to power
P0016-00	Crankshaft Position - Camshaft Position Correlation - Bank 1 Sensor	NOTE: Circuit VFS_IN_A -	■ Check engine timing. Check camshaft sensor timing plate is installed correctly. Check timing chain is installed correctly

	A - No sub type information	■ The relative positions of the crankshaft position sensor and cam timing plate teeth are not correct ■ Engine timing incorrect ■ Timing chain installed incorrectly ■ Variable valve timing forced fully advanced	
P0017-00	Crankshaft Position - Camshaft Position Correlation - Bank 1 Sensor B - No sub type information	△ NOTE: Circuit VFS_EX_A - ■ The relative positions of the crankshaft position sensor and camshaft timing plate teeth are not correct ■ Engine timing incorrect ■ Timing chain installed incorrectly ■ Variable valve timing forced fully advanced	■ Check for related DTC P0365-00. Check engine timing. Check camshaft sensor timing plate is installed correctly. Check timing chain is installed correctly ■ Refer to the electrical circuit diagrams and check exhaust (B) camshaft position actuator (Bank 1) for open circuit, short circuit to ground, short circuit to power
P0018-00	Crankshaft Position - Camshaft Position Correlation - Bank 2 Sensor A - No sub type information	△ NOTE: - Circuit VFS_IN_B - ■ The relative positions of the crankshaft position sensor and camshaft timing plate teeth are not correct ■ Engine timing incorrect ■ Timing chain installed incorrectly	■ Check engine timing. Check camshaft sensor timing plate is installed correctly. Check timing chain is installed correctly

		■ Variable valve timing forced fully advanced	
P0019-00	Crankshaft Position - Camshaft Position Correlation - Bank 2 Sensor B - No sub type information	**NOTE:** - Circuit VFS_EX_B - ■ The relative positions of the crankshaft position sensor and camshaft timing plate teeth are not correct ■ Engine timing incorrect ■ Timing chain installed incorrectly ■ Variable valve timing forced fully advanced	■ Check engine timing. Check camshaft sensor timing plate is installed correctly. Check timing chain is installed correctly
P001A-13	Intake (A) Cam Profile Control Circuit (Bank 1) - Circuit open	**NOTE:** - Circuit CPS_A - ■ Camshaft profile switching solenoid bank 1 open circuit	■ Refer to the electrical circuit diagrams and check camshaft profile switching solenoid bank 1 for open circuit
P001B-11	Intake (A) Cam Profile Control Circuit Low (Bank 1) - Circuit short to ground	**NOTE:** - Circuit CPS_A -	■ Refer to the electrical circuit diagrams and check camshaft profile switching solenoid bank 1 circuit for short circuit to ground

		■ Camshaft profile switching solenoid bank 1 circuit short circuit to ground	
P001C-12	Intake (A) Cam Profile Control Circuit High (Bank 1) - Circuit short to battery	**NOTE:** - Circuit CPS_A - ■ Camshaft profile switching solenoid bank 1 circuit short circuit to power	■ Refer to the electrical circuit diagrams and check camshaft profile switching solenoid bank 1 circuit for short circuit to power
P001D-13	Intake (A) Cam Profile Control Circuit (Bank 2) - Circuit open	**NOTE:** - Circuit CPS_B - ■ Camshaft profile switching solenoid bank 2 open circuit	■ Refer to the electrical circuit diagrams and check camshaft profile switching solenoid bank 2 for open circuit
P001E-11	Intake (A) Cam Profile Control Circuit Low (Bank 2) - Circuit short to ground	**NOTE:** - Circuit CPS_B - ■ Camshaft profile switching solenoid bank 2 circuit short circuit to ground	■ Refer to the electrical circuit diagrams and check camshaft profile switching solenoid bank 2 circuit for short circuit to ground
P001F-	Intake (A) Cam	**NOTE:**	

12	Profile Control Circuit High (Bank 2) - Circuit short to battery	- Circuit CPS_B - ■ Camshaft profile switching solenoid bank 2 circuit short circuit to power	■ Refer to the electrical circuit diagrams and check camshaft profile switching solenoid bank 2 circuit for short circuit to power
P0020-13	Intake (A) Camshaft Position Actuator (Bank 2) - Circuit open	NOTE: - Circuit VFS_IN_B - ■ Intake valve solenoid 2 open circuit	■ Refer to the electrical circuit diagrams and check intake valve solenoid 2 for open circuit
P0023-13	Exhaust (B) Camshaft Position Actuator (Bank 2) - Circuit open	NOTE: - Circuit VFS_EX_B - ■ Exhaust (B) Camshaft Position actuator (Bank 2) circuit, open circuit	■ Refer to the electrical circuit diagrams and check exhaust (B) camshaft position actuator (Bank 2) circuit for open circuit
P0026-72	Intake Valve Control Solenoid Circuit Range /Performance (Bank 1) - Actuator stuck open	NOTE: - Circuit VFS_IN_A - ■ Intake valve solenoid 1 angle less than target	■ Check operation of intake valve solenoid 1. Check and install a new intake valve solenoid 1 as required. Refer to the warranty policy and procedures manual, or determine if any prior approval programme is in operation, prior to the installation of a new module/component

		■ Intake valve solenoid 1 slow or not operating	
P0026-77	Intake Valve Control Solenoid Circuit Range /Performance (Bank 1) - Commanded position not reachable	**NOTE:** - Circuit VFS_IN_A - ■ Intake valve solenoid 1 angle greater than target ■ Intake valve solenoid 1 not returning to target in time ■ Intake valve solenoid 1 stuck advanced	■ Check operation of intake valve solenoid 1. Check and install a new intake valve solenoid 1 as required. Refer to the warranty policy and procedures manual, or determine if any prior approval programme is in operation, prior to the installation of a new module/component
P0027-72	Exhaust Valve Control Solenoid Circuit Range /Performance (Bank 1) - Actuator stuck open	**NOTE:** - Circuit VFS_EX_A - ■ Exhaust valve solenoid 1 angle less than target ■ Exhaust valve solenoid 1 slow or not operating	■ Check operation of exhaust valve solenoid 1. Check and install a new exhaust valve solenoid 1 as required. Refer to the warranty policy and procedures manual, or determine if any prior approval programme is in operation, prior to the installation of a new module/component
P0027-77	Exhaust Valve Control Solenoid Circuit Range /Performance (Bank 1) - Commanded position not reachable	**NOTE:** - Circuit VFS_EX_A - ■ Exhaust valve solenoid 1 angle greater than target	■ Check operation of exhaust valve solenoid 1. Check and install a new exhaust valve solenoid 1 as required. Refer to the warranty policy and procedures manual, or determine if any prior approval programme is in operation, prior to the installation of a new module/component

		■ Exhaust valve solenoid 1 not returning to target in time ■ Exhaust valve solenoid 1 stuck advanced	
P0028-72	Intake Valve Control Solenoid Circuit Range /Performance (Bank 2) - Actuator stuck open	**NOTE:** - Circuit VFS_IN_B - ■ Intake valve solenoid 2 angle less than target ■ Intake valve solenoid 2 slow or not operating	■ Check operation of intake valve solenoid 2. Check and install a new intake valve solenoid 2 as required. Refer to the warranty policy and procedures manual, or determine if any prior approval programme is in operation, prior to the installation of a new module/component
P0028-77	Intake Valve Control Solenoid Circuit Range /Performance (Bank 2) - Commanded position not reachable	**NOTE:** - Circuit VFS_IN_B - ■ Intake valve solenoid 2 angle greater than target ■ Intake valve solenoid 2 not returning to target in time ■ Intake valve solenoid 2 stuck advanced	■ Check operation of intake valve solenoid 2. Check and install a new intake valve solenoid 2 as required. Refer to the warranty policy and procedures manual, or determine if any prior approval programme is in operation, prior to the installation of a new module/component
P0029-72	Exhaust Valve Control Solenoid Circuit Range /Performance	**NOTE:** - Circuit VFS_EX_B -	■ Check operation of exhaust valve solenoid 2. Check and install a new exhaust valve solenoid 2 as required. Refer to the warranty policy and procedures manual, or determine if any

	(Bank 2) - Actuator stuck open	■ Exhaust valve solenoid 2 angle less than target ■ Exhaust valve solenoid 2 slow or not operating	prior approval programme is in operation, prior to the installation of a new module/component
P0029-77	Exhaust Valve Control Solenoid Circuit Range /Performance (Bank 2) - Commanded position not reachable	**NOTE:** - Circuit VFS_EX_B - ■ Exhaust valve solenoid 2 angle greater than target ■ Exhaust valve solenoid 2 not returning to target in time ■ Exhaust valve solenoid 2 stuck advanced	■ Check operation of exhaust valve solenoid 2. Check and install a new exhaust valve solenoid 2 as required. Refer to the warranty policy and procedures manual, or determine if any prior approval programme is in operation, prior to the installation of a new module/component
P0031-11	HO2S Heater Control Circuit Low (Bank 1, Sensor 1) - Circuit short to ground	**NOTES:** ■ - Circuit HTR_CTRL_A_UPSTREAM - ■ LR - Circuit UHEGO HEATER A - ■ Pre catalyst oxygen sensor-odd heater control circuit (Bank 1, Sensor 1) circuit short circuit to ground	■ Using the manufacturer approved diagnostic system check datalogger signal, Oxygen Sensor (O2S) Heater Duty Cycle Bank 1 Sensor 1 (0x03A1) ■ Refer to the electrical circuit diagrams and check pre catalyst oxygen sensor-odd heater control circuit (Bank 1, Sensor 1) circuit for short circuit to ground
P0031-13	HO2S Heater Control Circuit Low (Bank 1, Sensor 1) - Circuit open	**NOTES:** ■ - Circuit HTR_CTRL_A_UPSTREAM - ■ LR - Circuit UHEGO HEATER A -	■ Using the manufacturer approved diagnostic system check datalogger signal, Oxygen Sensor (O2S) Heater Duty Cycle Bank 1 Sensor 1 (0x03A1) ■ Refer to the electrical circuit diagrams and check pre catalyst oxygen sensor-

		■ Pre catalyst oxygen sensor-odd heater control circuit (Bank 1, Sensor 1) circuit, open circuit	odd heater control circuit (Bank 1, Sensor 1) circuit for open circuit
P0032-12	HO2S Heater Control Circuit High (Bank 1, Sensor 1) - Circuit short to battery	**NOTES:** ■ - Circuit HTR_CTRL_A_UPSTREAM - ■ LR - Circuit UHEGO HEATER A - ■ Pre catalyst oxygen sensor-odd heater control circuit (Bank 1, Sensor 1) circuit short circuit to power	■ Using the manufacturer approved diagnostic system check datalogger signal, Oxygen Sensor (O2S) Heater Duty Cycle Bank 1 Sensor 1 (0x03A1) ■ Refer to the electrical circuit diagrams and check pre catalyst oxygen sensor-odd heater control circuit (Bank 1, Sensor 1) circuit for short circuit to power
P0036-00	HO2S Heater Control Circuit (Bank 1, Sensor 2) - No sub type information	**NOTE:** - Circuit HTR_HEGO_A - ■ Catalyst oxygen sensor heater circuit control fuse failure ■ Post catalyst oxygen sensor-odd heater control circuit short circuit to ground, short circuit to power, open circuit ■ Catalyst oxygen sensor heater circuit control relay circuit short circuit to ground, short circuit to power, open circuit ■ Catalyst oxygen sensor heater circuit control relay failure ■ Post catalyst oxygen sensor-odd failure	■ Using the manufacturer approved diagnostic system check datalogger signal, Oxygen Sensor (O2S) Heater Duty Cycle Bank 1 Sensor 2 (0x03A2) ■ Refer to the electrical circuit diagrams and check post catalyst oxygen sensor-odd sensor fuse for open circuit ■ Refer to the electrical circuit diagrams and check post catalyst oxygen sensor-odd sensor circuit for short circuit to ground, short circuit to power, open circuit ■ Refer to the electrical circuit diagrams and check catalyst oxygen sensor heater circuit control relay circuit for short circuit to ground, short circuit to power, open circuit

			■ Check and install a new catalyst oxygen sensor heater control relay, as required. Check and install a new post catalyst oxygen sensor-odd as required. Refer to the warranty policy and procedures manual, or determine if any prior approval programme is in operation, prior to the installation of a new module/component
P003C-00	A Camshaft Profile Control Performance /Stuck Off (Bank 1) - No sub type information	**NOTE:** - Circuit CPS_A - ■ Oil supply blockage to camshaft profile switching solenoid ■ Catalyst oxygen sensor failure, giving false flag ■ Camshaft profile switching solenoid bank 1 circuit fault ■ Camshaft profile switching solenoid bank 1 fault	■ Check for the presence of oil at the camshaft profile switching solenoid ■ Check for catalyst oxygen sensor related DTCs ■ Refer to the electrical circuit diagrams and check camshaft profile switching solenoid bank 1 circuit for short circuit to power, short circuit to ground, open circuit ■ Check and install a new camshaft profile switching solenoid bank 1 as required. Refer to the warranty policy and procedures manual, or determine if any prior approval programme is in operation, prior to the installation of a new module/component ■ Clear DTC and road test the vehicle. If fault remains contact dealer technical support before carrying out any further work
P003E-	A Camshaft	**NOTE:**	

00	Profile Control Performance/ Stuck Off (Bank 2) - No sub type information	- Circuit CPS_B - ■ Oil supply blockage to camshaft profile switching solenoid ■ Catalyst oxygen sensor failure, giving false flag ■ Camshaft profile switching solenoid bank 2 circuit fault ■ Camshaft profile switching solenoid bank 2 fault	■ Check for the presence of oil at the camshaft profile switching solenoid ■ Check for catalyst oxygen sensor related DTCs ■ Refer to the electrical circuit diagrams and check camshaft profile switching solenoid bank 2 circuit for short circuit to power, short circuit to ground, open circuit ■ Check and install a new camshaft profile switching solenoid bank 2 as required. Refer to the warranty policy and procedures manual, or determine if any prior approval programme is in operation, prior to the installation of a new module/component ■ Clear DTC and road test the vehicle. If fault remains contact dealer technical support before carrying out any further work
P0051-11	HO2S Heater Control Circuit Low (Bank 2, Sensor 1) - Circuit short to ground	△ NOTES: ■ - Circuit HTR_CTRL_B_UPSTREAM - ■ LR - Circuit UHEGO HEATER B - ■ Pre catalyst oxygen sensor-even heater control circuit (Bank 2, Sensor 1) circuit short circuit to ground	■ Using the manufacturer approved diagnostic system check datalogger signal, Oxygen Sensor (O2S) Heater Duty Cycle Bank 2 Sensor 1 (0x03A4) ■ Refer to the electrical circuit diagrams and check pre catalyst oxygen sensor-even heater control circuit (Bank 2, Sensor 1) circuit for short circuit to ground

P0051-13	HO2S Heater Control Circuit Low (Bank 2, Sensor 1) - Circuit open	**NOTES:** - Circuit HTR_CTRL_B_UPSTREAM - LR - Circuit UHEGO HEATER B - Pre catalyst oxygen sensor-even heater control circuit (Bank 2, Sensor 1) circuit, open circuit	Using the manufacturer approved diagnostic system check datalogger signal, Oxygen Sensor (O2S) Heater Duty Cycle Bank 2 Sensor 1 (0x03A4) Refer to the electrical circuit diagrams and check pre catalyst oxygen sensor-even heater control circuit (Bank 2, Sensor 1) circuit for open circuit
P0052-12	HO2S Heater Control Circuit High (Bank 2, Sensor 1) - Circuit short to battery	**NOTES:** - Circuit HTR_CTRL_B_UPSTREAM - LR - Circuit UHEGO HEATER B - Pre catalyst oxygen sensor-even heater control circuit (Bank 2, Sensor 1) circuit short circuit to power	Using the manufacturer approved diagnostic system check datalogger signal, Oxygen Sensor (O2S) Heater Duty Cycle Bank 2 Sensor 1 (0x03A4) Refer to the electrical circuit diagrams and check pre catalyst oxygen sensor-even heater control circuit (Bank 2, Sensor 1) circuit for short circuit to power
P0054-00	HO2S Heater Resistance (Bank 1, Sensor 2) - No sub type information	**NOTES:** - Circuit HTR_CTRL_A_UPSTREAM - LR - Circuit UHEGO HEATER A - Catalyst oxygen sensor heater circuit control fuse failure	Using the manufacturer approved diagnostic system check datalogger signal, Oxygen Sensor (O2S) Heater Duty Cycle Bank 1 Sensor 1 (0x03A1) Refer to the electrical circuit diagrams and check post catalyst oxygen sensor-odd sensor fuse for open circuit Refer to the electrical circuit diagrams and check post catalyst oxygen sensor-

			■ Post catalyst oxygen sensor-odd heater control circuit short circuit to ground, short circuit to power, open circuit, high resistance ■ Catalyst oxygen sensor heater circuit control relay circuit short circuit to ground, short circuit to power, open circuit ■ Catalyst oxygen sensor heater circuit control relay failure ■ Post catalyst oxygen sensor-odd failure	odd sensor circuit for short circuit to ground, short circuit to power, open circuit, high resistance ■ Refer to the electrical circuit diagrams and check catalyst oxygen sensor heater circuit control relay circuit for short circuit to ground, short circuit to power, open circuit ■ Check and install a new catalyst oxygen sensor heater control relay, as required. Check and install a new post catalyst oxygen sensor-odd as required. Refer to the warranty policy and procedures manual, or determine if any prior approval programme is in operation, prior to the installation of a new module/component
P0056-00	HO2S Heater Control Circuit (Bank 2, Sensor 2) - No sub type information	**NOTE:** - Circuit HTR_HEGO_B - ■ Post catalyst oxygen sensor-even heater control circuit short circuit to ground, short circuit to power, open circuit ■ Catalyst oxygen sensor heater circuit control relay circuit short circuit to ground, short circuit to power, open circuit ■ Catalyst oxygen sensor heater circuit control relay failure	■ Using the manufacturer approved diagnostic system check datalogger signal, Oxygen Sensor (O2S) Heater Duty Cycle Bank 2 Sensor 2 (0x03A5) ■ Refer to the electrical circuit diagrams and check post catalyst oxygen sensor-even sensor circuit for short circuit to ground, short circuit to power, open circuit ■ Refer to the electrical circuit diagrams and check catalyst oxygen sensor heater circuit control relay circuit for short circuit to ground, short circuit to power, open circuit

		■ Post catalyst oxygen sensor-even failure	■ Check and install a new catalyst oxygen sensor heater control relay, as required. Check and install a new post catalyst oxygen sensor-even, as required. Refer to the warranty policy and procedures manual, or determine if any prior approval programme is in operation, prior to the installation of a new module/component
P0060-00	HO2S Heater Resistance (Bank 2, Sensor 2) - No sub type information	△ **NOTES:** ■ - Circuit HTR_CTRL_B_UPSTREAM - ■ LR - Circuit UHEGO HEATER B - ■ Catalyst oxygen sensor heater circuit control fuse failure ■ Post catalyst oxygen sensor-even heater control circuit short circuit to ground, short circuit to power, open circuit, high resistance ■ Catalyst oxygen sensor heater circuit control relay circuit short circuit to ground, short circuit to power, open circuit ■ Catalyst oxygen sensor heater circuit control relay failure ■ Post catalyst oxygen sensor-even failure	■ Using the manufacturer approved diagnostic system check datalogger signal, Oxygen Sensor (O2S) Heater Duty Cycle Bank 2 Sensor 2 (0x03A5) ■ Refer to the electrical circuit diagrams and check post catalyst oxygen sensor-even sensor fuse for open circuit ■ Refer to the electrical circuit diagrams and check post catalyst oxygen sensor-even sensor circuit for short circuit to ground, short circuit to power, open circuit, high resistance ■ Refer to the electrical circuit diagrams and check catalyst oxygen sensor heater circuit control relay circuit for short circuit to ground, short circuit to power, open circuit ■ Check and install a new catalyst oxygen sensor heater control relay, as required. Check and install a new post catalyst oxygen sensor-even as required. Refer to the warranty policy and procedures manual, or determine if

			any prior approval programme is in operation, prior to the installation of a new module/component
P0069-29	MAP - Barometric Pressure Correlation - Signal invalid	■ Manifold absolute pressure sensor failure ■ Engine control module failure	■ Using the manufacturer approved diagnostic system check datalogger signal, Barometric Pressure Sensor Voltage (0x035A). Check for related manifold absolute pressure sensor DTCs ■ Refer to the electrical circuit diagrams and check manifold absolute pressure sensor circuit for short circuit to ground, short circuit to power, open circuit ■ Check and install new manifold absolute pressure sensor as required. Check and install a new engine control module as required. Refer to the warranty policy and procedures manual, or determine if any prior approval programme is in operation, prior to the installation of a new module /component
P0071-21	Ambient Air Temperature Sensor Range /Performance - Signal amplitude < minimum	**NOTES:** ■ Jaguar - Circuit AMBIENT_TEMP_SENSOR - ■ LR - Circuit TAMB TEMP - ■ Ambient air temperature sensor circuit short circuit to ground, short circuit to power, open circuit	■ Using the manufacturer approved diagnostic system check datalogger signal, Ambient Air Temperature Sensor Voltage (0x03BA) ■ Refer to the electrical circuit diagrams and check ambient air temperature sensor circuit for short circuit to ground, short circuit to power, open circuit

			■ Temperature and manifold absolute pressure sensor circuit short circuit to ground, short circuit to power, open circuit ■ Ambient air temperature sensor failure ■ Temperature and manifold absolute pressure sensor failure	■ Refer to the electrical circuit diagrams and check temperature and manifold absolute pressure sensor circuit for short circuit to ground, short circuit to power, open circuit ■ Check and install a new ambient air temperature sensor as required. Check and install a new temperature and manifold absolute pressure sensor as required. Refer to the warranty policy and procedures manual, or determine if any prior approval programme is in operation, prior to the installation of a new module/component
P0071-22	Ambient Air Temperature Sensor Range /Performance - Signal amplitude > maximum	**NOTES:** ■ - Circuit AMBIENT_TEMP_SENSOR - ■ LR - Circuit TAMB TEMP - ■ Ambient air temperature sensor circuit short circuit to ground, short circuit to power, open circuit ■ Temperature and manifold absolute pressure sensor circuit short circuit to ground, short circuit to power, open circuit ■ Ambient air temperature sensor failure ■ Temperature and manifold absolute pressure sensor failure	■ Using the manufacturer approved diagnostic system check datalogger signal, Ambient Air Temperature Sensor Voltage (0x03BA) ■ Refer to the electrical circuit diagrams and check ambient air temperature sensor circuit for short circuit to ground, short circuit to power, open circuit ■ Refer to the electrical circuit diagrams and check temperature and manifold absolute pressure sensor circuit for short circuit to ground, short circuit to power, open circuit ■ Check and install a new ambient air temperature sensor as required. Check and install a new temperature and manifold absolute pressure sensor as

			required. Refer to the warranty policy and procedures manual, or determine if any prior approval programme is in operation, prior to the installation of a new module/component
P0072-00	Ambient Air Temperature Sensor Circuit Low - No sub type information	**NOTES:** - Circuit AMBIENT_TEMP_SENSOR - LR - Circuit TAMB TEMP - ■ Ambient air temperature sensor circuit short circuit to ground, open circuit, high resistance ■ Ambient air temperature sensor failure	■ Using the manufacturer approved diagnostic system check datalogger signal, Ambient Air Temperature Sensor Voltage (0x03BA) ■ Refer to the electrical circuit diagrams and check ambient air temperature sensor circuit for short circuit to ground, open circuit, high resistance ■ Check and install a new ambient air temperature sensor as required. Refer to the warranty policy and procedures manual, or determine if any prior approval programme is in operation, prior to the installation of a new module /component
P0073-00	Ambient Air Temperature Sensor Circuit High - No sub type information	**NOTES:** - Circuit AMBIENT_TEMP_SENSOR - LR - Circuit TAMB TEMP - ■ Ambient air temperature sensor ground circuit high resistance, open circuit	■ Using the manufacturer approved diagnostic system check datalogger signals Ambient Air Temperature Sensor Voltage (0x03BA) ■ Refer to the electrical circuit diagrams and check ambient air temperature sensor circuit for short circuit to ground, high resistance, short circuit to power. Check connector terminals for corrosion or damage

		■ Ambient air temperature sensor signal circuit short circuit to power ■ Ambient air temperature sensor failure	■ Check and install a new ambient air temperature sensor as required. Refer to the warranty policy and procedures manual, or determine if any prior approval programme is in operation, prior to the installation of a new module /component
P007B-23	Charge Air Cooler Temperature Sensor Circuit Range /Performance (Bank 1) - Signal stuck low	■ The engine control module measures a signal that remains low when transitions are expected ■ Battery disconnection resulting in errors in engine off time (short soaks may look like long soaks) ■ Electric block heater applied and not detected ■ Charge air temperature sensor circuit, short circuit to ground, short circuit to power, open circuit, high resistance ■ Connector is disconnected, connector pin is backed out, connector pin corrosion ■ Charge air temperature sensor failure ■ **Additional checks to carry out ONLY for Range Rover / L405 and Range Rover Sport / L494 vehicles equipped with Fuel Fired Booster Heater (FFBH) system** ■ Changeover valve - Fuel Fired Booster Heater (FFBH) system failure ■ This valve should only allow coolant into the engine if the engine coolant temperature is -25° C (-13°F) or below. When de-energized, the changeover valve connects the heater coolant circuit to the engine coolant circuit. When energized, the changeover valve isolates the heater coolant circuit from the engine coolant	■ Leave vehicle turned off for a minimum of 8 hours and allow to soak to a stable temperature. Using the manufacturer approved diagnostic system check datalogger signals - Ambient Air Temperature - (0xF446) - Engine Coolant Temperature (0xF405) - Boost Air Temperature - Raw physical value (0x0341) - Intake Air Temperature (0xF40F) - Engine Coolant Temperature #2 (0x0489). All sensors should be within 20 degºC of each other ■ Refer to electrical circuit diagrams and check the charge air temperature sensor circuit for short circuit to ground, short circuit to power, open circuit, high resistance ■ Inspect connectors for signs of water ingress, and pins for damage and/or corrosion ■ Check and install a new charge air temperature sensor as required ■ Check and install new sensor that is biased higher or lower than the other sensors

		circuit. If this valve is de-energizing above -25°C (-13°F) it will be inadvertently allowing heated coolant into the engine and causing the DTC to set due to a mismatch between coolant temperature sensor 1 and all the other temperature sensors	■ **Additional checks to carry out ONLY for Range Rover / L405 and Range Rover Sport / L494 vehicles equipped with Fuel Fired Booster Heater (FFBH) system** ■ Check and install new a changeover valve - Fuel Fired Booster Heater (FFBH) system ■ Using the manufacturer approved diagnostic system clear all stored DTCs using the 'Diagnosis Menu' tab and retest
P007B-24	Charge Air Cooler Temperature Sensor Circuit Range /Performance (Bank 1) - Signal stuck high	■ The engine control module measures a signal that remains high when transitions are expected ■ Battery disconnection resulting in errors in engine off time (short soaks may look like long soaks) ■ Electric block heater applied and not detected ■ Fuse failure ■ Charge air temperature sensor circuit, short circuit to ground, short circuit to power, open circuit, high resistance ■ Connector is disconnected, connector pin is backed out, connector pin corrosion ■ Charge air temperature sensor failure ■ Air charge coolant pump and control circuit, short circuit to ground, short circuit to power, open circuit, high resistance ■ Air charge coolant pump relay failure ■ Air charge coolant pump failure	■ Leave vehicle turned off for a minimum of 8 hours and allow to soak to a stable temperature. Using the manufacturer approved diagnostic system check datalogger signals - Ambient Air Temperature - (0xF446) - Engine Coolant Temperature (0xF405) - Boost Air Temperature - Raw physical value (0x0341) - Intake Air Temperature (0xF40F) - Engine Coolant Temperature #2 (0x0489). All sensors should be within 20 degºC of each other ■ Refer to electrical circuit diagrams and check for fuse failure, install a new fuse as required ■ Refer to electrical circuit diagrams and check the charge air temperature sensor circuit for short circuit to ground, short circuit to power, open circuit, high resistance

			■ **Additional checks to carry out ONLY for Range Rover / L405 and Range Rover Sport / L494 vehicles equipped with Fuel Fired Booster Heater (FFBH) system** ■ Changeover valve - Fuel Fired Booster Heater (FFBH) system failure ■ This valve should only allow coolant into the engine if the engine coolant temperature is -25° C (-13°F) or below. When de-energized, the changeover valve connects the heater coolant circuit to the engine coolant circuit. When energized, the changeover valve isolates the heater coolant circuit from the engine coolant circuit. If this valve is de-energizing above -25°C (-13°F) it will be inadvertently allowing heated coolant into the engine and causing the DTC to set due to a mismatch between coolant temperature sensor 1 and all the other temperature sensors	■ Inspect connectors for signs of water ingress, and pins for damage and/or corrosion ■ Check and install a new charge air temperature sensor as required ■ Refer to electrical circuit diagrams and check the air charge coolant pump and control circuit for short circuit to ground, short circuit to power, open circuit, high resistance ■ Refer to electrical circuit diagrams and check the air charge coolant pump for open circuit, high resistance ■ Refer to the relevant section of the workshop manual and check the air charge coolant pump for correct operation. Check and install a new air charge coolant pump as required ■ Check and install new sensor that is biased higher or lower than the other sensors ■ **Additional checks to carry out ONLY for Range Rover / L405 and Range Rover Sport / L494 vehicles equipped with Fuel Fired Booster Heater (FFBH) system** ■ Check and install new a changeover valve - Fuel Fired Booster Heater (FFBH) system	

			■ Using the manufacturer approved diagnostic system clear all stored DTCs using the 'Diagnosis Menu' tab and retest
P007B-29	Charge Air Cooler Temperature Sensor Circuit Range /Performance (Bank 1) - Signal invalid	■ Battery disconnection resulting in errors in engine off time (short soaks may look like long soaks) ■ Electric block heater applied and not detected ■ Fuse failure ■ Charge air temperature sensor circuit, short circuit to ground, short circuit to power, open circuit, high resistance ■ Connector is disconnected, connector pin is backed out, connector pin corrosion ■ Charge air temperature sensor failure ■ Air charge coolant pump and control circuit, short circuit to ground, short circuit to power, open circuit, high resistance ■ Air charge coolant pump relay failure ■ Air charge coolant pump failure	■ Leave vehicle turned off for a minimum of 8 hours and allow to soak to a stable temperature. Using the manufacturer approved diagnostic system check datalogger signals - Ambient Air Temperature - (0xF446) - Engine Coolant Temperature (0xF405) - Boost Air Temperature - Raw physical value (0x0341) - Intake Air Temperature (0xF40F) - Engine Coolant Temperature #2 (0x0489). All sensors should be within 20 degºC of each other ■ Refer to electrical circuit diagrams and check for fuse failure, install a new fuse as required ■ Refer to electrical circuit diagrams and check the charge air temperature sensor circuit for short circuit to ground, short circuit to power, open circuit, high resistance ■ Inspect connectors for signs of water ingress, and pins for damage and/or corrosion ■ Check and install a new charge air temperature sensor as required ■ Refer to electrical circuit diagrams and check the air charge coolant pump and

				control circuit for short circuit to ground, short circuit to power, open circuit, high resistance ■ Refer to electrical circuit diagrams and check the air charge coolant pump for open circuit, high resistance ■ Refer to the relevant section of the workshop manual and check the air charge coolant pump for correct operation. Check and install a new air charge coolant pump as required ■ Using the manufacturer approved diagnostic system clear all stored DTCs using the 'Diagnosis Menu' tab and retest
P007C-00	Charge Air Cooler Temperature Sensor Circuit Low (Bank 1) - No sub type information	■ Charge air temperature sensor circuit, short circuit to ground, short circuit to power, open circuit, high resistance ■ Connector is disconnected, connector pin is backed out, connector pin corrosion ■ Charge air temperature sensor failure	■ Refer to electrical circuit diagrams and check the charge air temperature sensor circuit for short circuit to ground, short circuit to power, open circuit, high resistance ■ Inspect connectors for signs of water ingress, and pins for damage and/or corrosion ■ Check and install a new charge air temperature sensor as required ■ Using the manufacturer approved diagnostic system clear all stored DTCs using the 'Diagnosis Menu' tab and retest

P007D-00	Charge Air Cooler Temperature Sensor Circuit High (Bank 1) - No sub type information	■ Charge air temperature sensor circuit, short circuit to ground, short circuit to power, open circuit, high resistance ■ Connector is disconnected, connector pin is backed out, connector pin corrosion ■ Charge air temperature sensor failure	■ Refer to electrical circuit diagrams and check the charge air temperature sensor circuit for short circuit to ground, short circuit to power, open circuit, high resistance ■ Inspect connectors for signs of water ingress, and pins for damage and/or corrosion ■ Check and install a new charge air temperature sensor as required ■ Using the manufacturer approved diagnostic system clear all stored DTCs using the 'Diagnosis Menu' tab and retest
P0087-00	Fuel Rail /System Pressure - Too Low - No sub type information	**NOTE:** - Circuit FUEL_HIGH_PRESS_SENSOR - ■ Fuel rail pressure sensor circuit short circuit to ground, open circuit, high resistance ■ Fuel rail pressure sensor failure ■ Fuel lines leaking or restricted ■ Fuel pump failure	■ Using the manufacturer approved diagnostic system check datalogger signal, Fuel Rail Pressure Sensor - High Range Sensor Voltage (0x0377) ■ Refer to the electrical circuit diagrams and check fuel rail pressure sensor circuit for short circuit to ground, open circuit, high resistance ■ Check for fuel pump related DTCs. Check fuel lines for leakage or restriction ■ Check and install new fuel rail pressure sensor as required. Check and install a new fuel pump as required. Refer to the warranty policy and procedures manual, or determine if any prior approval programme is in operation,

			prior to the installation of a new module /component
P0088-00	Fuel Rail /System Pressure - Too High - No sub type information	**NOTE:** - Circuit FUEL_HIGH_PRESS_SENSOR - ■ Fuel rail pressure sensor circuit short to each other, high resistance, short circuit to power ■ Fuel rail pressure sensor failure	■ Using the manufacturer approved diagnostic system check datalogger signal, Fuel Rail Pressure Sensor - High Range Sensor Voltage (0x0377) ■ Refer to the electrical circuit diagrams and check fuel rail pressure sensor circuit for short to each other, high resistance, short circuit to power ■ Check and install new fuel rail pressure sensor as required. Refer to the warranty policy and procedures manual, or determine if any prior approval programme is in operation, prior to the installation of a new module /component
P008A-00	Low Pressure Fuel System Pressure - Too Low - No sub type information	**NOTE:** - Circuit LOW_PRESS_FUEL_PRESS_SENSOR - ■ Low pressure fuel sensor circuit failure, short circuit to ground, short circuit to power, open circuit ■ Fuel pump driver module circuit short circuit to ground, short circuit to power, open circuit ■ Low pressure fuel ■ Fuel pump driver module failure	■ Using the manufacturer approved diagnostic system check datalogger signal, Fuel Rail Pressure - Low Range Sensor Voltage (0x0376) ■ Check fuel system for leakage ■ Refer to the electrical circuit diagrams and check low pressure fuel sensor circuit for short circuit to ground, short circuit to power, open circuit ■ Refer to the electrical circuit diagrams and check fuel pump driver module circuit short circuit to ground, short circuit to power, open circuit

			■ Check and install a new low pressure fuel sensor as required. Check and install a new fuel pump driver module as required. Refer to the warranty policy and procedures manual, or determine if any prior approval programme is in operation, prior to the installation of a new module/component
P008B-00	Low Pressure Fuel System Pressure - Too High - No sub type information	**NOTE:** - Circuit LOW_PRESS_FUEL_PRESS_SENSOR - ■ Low pressure fuel sensor circuit short circuit to ground, short circuit to power, open circuit ■ Fuel pump driver module circuit short circuit to ground, short circuit to power, open circuit ■ Blockage or restriction in low pressure fuel line ■ Low pressure fuel sensor failure ■ Fuel pump driver module failure	■ Using the manufacturer approved diagnostic system check datalogger signal, Fuel Rail Pressure - Low Range Sensor Voltage (0x0376) ■ Refer to the electrical circuit diagrams and check low pressure fuel sensor circuit for short circuit to ground, short circuit to power, open circuit. Check for blockage or restriction in low pressure fuel line ■ Refer to the electrical circuit diagrams and check fuel pump driver module circuit short circuit to ground, short circuit to power, open circuit ■ Check and install a new low pressure fuel sensor as required. Check and install a new fuel pump driver module as required. Refer to the warranty policy and procedures manual, or determine if any prior approval programme is in operation, prior to the installation of a new module/component
P00AB-	Intake Air		

23	Temperature Sensor 1 Circuit Range /Performance (Bank 2) - Signal stuck low	**NOTE:** - Circuit INLET_AIR_TEMP_SENSOR_B - ■ Intake air temperature sensor bank 2 circuit short circuit to ground, open circuit ■ Intake air temperature sensor bank 2 failure	■ Using the manufacturer approved diagnostic system check datalogger signal, Intake Air Temperature Sensor Bank 2 (0x0312) ■ Refer to the electrical circuit diagrams and check intake air temperature sensor bank 2 circuit for short circuit to ground, open circuit ■ Check and install a new intake air temperature sensor bank 2 as required. Refer to the warranty policy and procedures manual, or determine if any prior approval programme is in operation, prior to the installation of a new module/component
P00AB-24	Intake Air Temperature Sensor 1 Circuit Range /Performance (Bank 2) - Signal stuck high	**NOTE:** - Circuit INLET_AIR_TEMP_SENSOR_B - ■ Intake air temperature sensor bank 2 circuit short circuit to power ■ Intake air temperature sensor bank 2 failure	■ Using the manufacturer approved diagnostic system check datalogger signal, Intake Air Temperature Sensor Bank 2 (0x0312) ■ Refer to the electrical circuit diagrams and check intake air temperature sensor bank 2 circuit for short circuit to power ■ Check and install a new intake air temperature sensor bank 2 as required. Refer to the warranty policy and procedures manual, or determine if any prior approval programme is in operation, prior to the installation of a new module/component

P00AB-29	Intake Air Temperature Sensor 1 Circuit Range /Performance (Bank 2) - Signal invalid	**NOTE:** - Circuit INLET_AIR_TEMP_SENSOR_B - ■ Intake air temperature sensor bank 2 circuit short circuit to ground, open circuit, short circuit to power ■ Intake air temperature sensor bank 2 failure	■ Using the manufacturer approved diagnostic system check datalogger signal, Intake Air Temperature Sensor Bank 2 (0x0312) ■ Refer to the electrical circuit diagrams and check intake air temperature sensor bank 2 circuit for open circuit, short circuit to ground, short circuit to power ■ Check and install a new intake air temperature sensor bank 2 as required. Refer to the warranty policy and procedures manual, or determine if any prior approval programme is in operation, prior to the installation of a new module/component
P00AC-00	Intake Air Temperature Sensor 1 Circuit Low (Bank 2) - No sub type information	**NOTE:** - Circuit INLET_AIR_TEMP_SENSOR_B - ■ Intake air temperature sensor bank 2 sensing circuit short circuit to ground, high resistance, disconnected ■ Intake air temperature sensor bank 2 failure	■ Using the manufacturer approved diagnostic system check datalogger signal, Intake Air Temperature Sensor Bank 2 (0x0312) ■ Refer to the electrical circuit diagrams and check intake air temperature sensor bank 2 circuit for short circuit to ground, open circuit, high resistance, disconnected connector ■ Check and install a new intake air temperature sensor bank 2 as required. Refer to the warranty policy and procedures manual, or determine if any prior approval programme is in operation, prior to the installation of a new module/component

P00AD-00	Intake Air Temperature Sensor 1 Circuit High (Bank 2) - No sub type information	**NOTE:** - Circuit INLET_AIR_TEMP_SENSOR_B - ■ Intake air temperature sensor bank 2 sensing circuit short ground, short circuit to power, open circuit, high resistance ■ Intake air temperature sensor bank 2 failure	■ Using the manufacturer approved diagnostic system check datalogger signal, Intake Air Temperature Sensor Bank 2 (0x0312) ■ Refer to the electrical circuit diagrams and check intake air temperature sensor bank 2 circuit for short ground, short circuit to power, open circuit, high resistance. Check for backed out or damaged connector pins ■ Check and install a new intake air temperature sensor bank 2 as required. Refer to the warranty policy and procedures manual, or determine if any prior approval programme is in operation, prior to the installation of a new module/component
P00C6-00	Fuel Rail Pressure Too Low - Engine Cranking - No sub type information	■ No fuel at pump ■ Injector stuck open ■ Fuel pressure sensor signal stuck ■ Fuel pump failure	■ Check fuel supply to both pumps (if engine runs then supply is not suspect). If engine does not run perform fuel prime routine. Use fuel pump diagnostic routine to determine if one pump has failed, if so replace pump. If a fuel injector is stuck open the exhaust will smell of fuel and fuelling adaptions may indicate rich shift. Perform checks for as DTC P0191-00 ■ Check and install a new fuel pump as required. Refer to the warranty policy and procedures manual, or determine if any prior approval programme is in

			operation, prior to the installation of a new module/component
P0101-00	Mass or Volume Air Flow A Circuit Range /Performance - No sub type information	■ Intake air distribution and filtering components incorrectly installed ■ Leakage from intake air system ■ Blocked air cleaner element(s) ■ Blocked engine breather ■ Blockage in intake air system ■ Mass air flow sensor seal failure ■ Connector is disconnected, connector terminal is backed out, connector terminal corrosion ■ Mass air flow sensor circuit, short circuit to ground, short circuit to power, open circuit, high resistance ■ Carbon build-up on throttle blade ■ Blocked injectors ■ Blocked catalysts ■ Mass air flow sensor failure	■ Using the manufacturer approved smoke tester check intake air distribution and filtering components for leakage and correct installation ■ Check air cleaner element is free from restriction and in serviceable condition ■ Ensure the engine breather system is correctly installed and in serviceable condition ■ Check for mass air flow sensor seal integrity and correct installation ■ Inspect connectors for signs of water ingress, and pins for damage and/or corrosion ■ Refer to the electrical circuit diagrams and check mass air flow sensor circuit for short circuit to ground, short circuit to power, open circuit, high resistance ■ Make sure throttle blade is clean of carbon ■ Check for blocked injectors ■ Check for blocked catalysts ■ Clear the DTC and retest ■ Refer to the relevant section of workshop manual. Reset fuelling

			adaptions and carry out Powertrain Control Module (PCM) Long Drive Cycle Self-Test ■ Check and install new mass air flow sensor as required
P0102-00	Mass or Volume Air Flow A Circuit Low - No sub type information	■ Fuse failure ■ Connector is disconnected, connector terminal is backed out, connector terminal corrosion ■ Mass air flow sensor circuit, short circuit to ground, short circuit to power, open circuit, high resistance ■ Mass air flow sensor failure	■ Check for fuse failure ■ Inspect connectors for signs of water ingress, and pins for damage and/or corrosion ■ Refer to the electrical circuit diagrams and check mass air flow sensor circuit for short circuit to ground, short circuit to power, open circuit, high resistance ■ Clear the DTC and retest ■ Refer to the relevant section of workshop manual. Reset fuelling adaptions and carry out Powertrain Control Module (PCM) Long Drive Cycle Self-Test ■ Check and install new mass air flow sensor as required
P0103-00	Mass or Volume Air Flow A Circuit High - No sub type information	■ Connector is disconnected, connector terminal is backed out, connector terminal corrosion ■ Mass air flow sensor circuit, short circuit to ground, short circuit to power, open circuit, high resistance ■ Blocked air cleaner element(s) ■ Blockage in air intake system	■ Using the manufacturer approved diagnostic system check datalogger signal, Mass Air Flow Sensor, Bank 1 (0x0314) ■ Inspect connectors for signs of water ingress, and pins for damage and/or corrosion

		■ Mass air flow sensor failure	■ Refer to the electrical circuit diagrams and check mass air flow sensor circuit for short circuit to ground, short circuit to power, open circuit, high resistance ■ Check air cleaner element is free from restriction and in serviceable condition ■ Check air intake system for blockage ■ Clear the DTC and retest ■ Refer to the relevant section of workshop manual. Reset fuelling adaptions and carry out Powertrain Control Module (PCM) Long Drive Cycle Self-Test ■ Check and install new mass air flow sensor as required
P0106-00	Manifold Absolute Pressure/BARO Sensor Range /Performance - No sub type information	**NOTE:** - Circuit MAP_SENSOR - ■ Blocked air cleaner element(s) ■ Intake manifold air leak ■ Manifold absolute pressure sensor circuit short circuit to ground, short circuit to power, open circuit, high resistance ■ Engine breather leak ■ Carbon build up on throttle plate ■ Exhaust system blocked	■ Check air cleaner element is free from restriction ■ Check for leak from air intake system, rectify as required ■ Refer to the electrical circuit diagrams and check manifold absolute pressure sensor circuit for short circuit to ground, short circuit to power, open circuit, high resistance ■ Ensure the engine breather system is correctly installed and in serviceable condition ■ Make sure throttle blade is clean of carbon

		■ Manifold absolute pressure sensor failure ■ BARO sensor failure	■ Check for blocked exhaust ■ Check and install a new manifold absolute pressure sensor as required. Check for related BARO sensor DTC P0069-29. Refer to the warranty policy and procedures manual, or determine if any prior approval programme is in operation, prior to the installation of a new module/component
P0107-00	Manifold Absolute Pressure/BARO Sensor Low - No sub type information	**NOTE:** - Circuit MAP_SENSOR - ■ Manifold absolute pressure sensor circuit short circuit to ground, open circuit, high resistance ■ Manifold absolute pressure sensor failure	■ Refer to the electrical circuit diagrams and check manifold absolute pressure sensor circuit for short circuit to ground, open circuit, high resistance ■ Check and install a new manifold absolute pressure sensor as required. Refer to the warranty policy and procedures manual, or determine if any prior approval programme is in operation, prior to the installation of a new module/component
P0108-00	Manifold Absolute Pressure/BARO Sensor High - No sub type information	**NOTE:** - Circuit MAP_SENSOR - ■ Manifold absolute pressure sensor circuit short circuit to power, open circuit, high resistance ■ Manifold absolute pressure sensor failure	■ Refer to the electrical circuit diagrams and check manifold absolute pressure sensor circuit for short circuit to power, open circuit, high resistance ■ Check and install a new manifold absolute pressure sensor as required. Refer to the warranty policy and procedures manual, or determine if any prior approval programme is in operation, prior to the installation of a new module/component

P010B-00	Mass or Volume Air Flow B Circuit Range /Performance - No sub type information	■ Intake air distribution and filtering components incorrectly installed ■ Leakage from intake air system ■ Blocked air cleaner element(s) ■ Blocked engine breather ■ Blockage in intake air system ■ Mass air flow sensor seal failure ■ Connector is disconnected, connector terminal is backed out, connector terminal corrosion ■ Mass air flow sensor circuit, short circuit to ground, short circuit to power, open circuit, high resistance ■ Carbon build-up on throttle blade ■ Blocked injectors ■ Blocked catalysts ■ Mass air flow sensor failure	■ Using the manufacturer approved smoke tester check intake air distribution and filtering components for leakage and correct installation ■ Check air cleaner element is free from restriction and in serviceable condition ■ Ensure the engine breather system is correctly installed and in serviceable condition ■ Check for mass air flow sensor seal integrity and correct installation ■ Inspect connectors for signs of water ingress, and pins for damage and/or corrosion ■ Refer to the electrical circuit diagrams and check mass air flow sensor circuit for short circuit to ground, short circuit to power, open circuit, high resistance ■ Make sure throttle blade is clean of carbon ■ Check for blocked injectors ■ Check for blocked catalysts ■ Clear the DTC and retest ■ Refer to the relevant section of workshop manual. Reset fuelling adaptions and carry out Powertrain Control Module (PCM) Long Drive Cycle Self-Test

			■ Check and install new mass air flow sensor as required
P010C-00	Mass or Volume Air Flow B Circuit Low - No sub type information	■ Fuse failure ■ Connector is disconnected, connector terminal is backed out, connector terminal corrosion ■ Mass air flow sensor circuit, short circuit to ground, short circuit to power, open circuit, high resistance ■ Mass air flow sensor failure	■ Check for fuse failure ■ Inspect connectors for signs of water ingress, and pins for damage and/or corrosion ■ Refer to the electrical circuit diagrams and check mass air flow sensor circuit for short circuit to ground, short circuit to power, open circuit, high resistance ■ Clear the DTC and retest ■ Refer to the relevant section of workshop manual. Reset fuelling adaptions and carry out Powertrain Control Module (PCM) Long Drive Cycle Self-Test Check and install new mass air flow sensor as required
P010D-00	Mass or Volume Air Flow B Circuit High - No sub type information	■ Connector is disconnected, connector terminal is backed out, connector terminal corrosion ■ Mass air flow sensor circuit, short circuit to ground, short circuit to power, open circuit, high resistance ■ Blocked air cleaner element(s) ■ Blockage in air intake system ■ Mass air flow sensor failure	■ Using the manufacturer approved diagnostic system check datalogger signal, Mass Air Flow Sensor 2 Voltage (0x0503) ■ Inspect connectors for signs of water ingress, and pins for damage and/or corrosion

				■ Refer to the electrical circuit diagrams and check mass air flow sensor circuit for short circuit to ground, short circuit to power, open circuit, high resistance ■ Check air cleaner element is free from restriction and in serviceable condition ■ Check air intake system for blockage ■ Clear the DTC and retest ■ Refer to the relevant section of workshop manual. Reset fuelling adaptions and carry out Powertrain Control Module (PCM) Long Drive Cycle Self-Test ■ Check and install new mass air flow sensor as required
P010F-00	Mass or Volume Air Flow Sensor A /B Correlation - No sub type information	■ Intake air distribution and filtering components incorrectly installed ■ Leakage from intake air system ■ Blocked air cleaner element(s) ■ Blocked engine breather ■ Blockage in intake air system ■ Mass air flow sensor seal failure ■ Connector is disconnected, connector terminal is backed out, connector terminal corrosion ■ Mass air flow sensor circuit, short circuit to ground, short circuit to power, open circuit, high resistance ■ Carbon build-up on throttle blade	■ Using the manufacturer approved smoke tester check intake air distribution and filtering components for leakage and correct installation ■ Ensure the engine breather system is correctly installed and in serviceable condition ■ Check for mass air flow sensor seal integrity and correct installation ■ Inspect connectors for signs of water ingress, and pins for damage and/or corrosion

		■ Blocked injectors ■ Blocked catalysts ■ Mass air flow sensor failure	■ Refer to the electrical circuit diagrams and check mass air flow sensor circuit for short circuit to ground, short circuit to power, open circuit, high resistance ■ Make sure throttle blade is clean of carbon ■ Check for blocked injectors ■ Check for blocked catalysts ■ Clear the DTC and retest ■ Refer to the relevant section of workshop manual. Reset fuelling adaptions and carry out Powertrain Control Module (PCM) Long Drive Cycle Self-Test ■ Check and install new mass air flow sensor as required
P0111-23	Intake Air Temperature Sensor 1 Circuit Range /Performance - Signal stuck low	△ NOTE: - Circuit INLET_AIR_TEMP_SENSOR_A - ■ Intake air temperature sensor short circuit to ground, open circuit, high resistance ■ Intake air temperature sensor failure	■ Refer to the electrical circuit diagrams and check intake air temperature sensor circuit for short circuit to ground, open circuit, high resistance ■ Check and install a new intake air temperature sensor as required. Refer to the warranty policy and procedures manual, or determine if any prior approval programme is in operation, prior to the installation of a new module /component
P0111-24	Intake Air Temperature	△ NOTE:	■ Refer to the electrical circuit diagrams and check intake air temperature

	Sensor 1 Circuit Range /Performance - Signal stuck high	- Circuit INLET_AIR_TEMP_SENSOR_A - ■ Intake air temperature sensor circuit short circuit to power, open circuit ■ Intake air temperature sensor failure	sensor circuit for short circuit to power, open circuit ■ Check and install a new intake air temperature sensor as required. Refer to the warranty policy and procedures manual, or determine if any prior approval programme is in operation, prior to the installation of a new module /component
P0111-29	Intake Air Temperature Sensor 1 Circuit Range /Performance - Signal invalid	△ NOTE: - Circuit INLET_AIR_TEMP_SENSOR_A - ■ Intake air temperature sensor circuit short circuit to ground, short circuit to power, open circuit ■ Intake air temperature sensor failure	■ Refer to the electrical circuit diagrams and check intake air temperature sensor circuit for short circuit to ground, short circuit to power, open circuit ■ Check and install a new intake air temperature sensor as required. Refer to the warranty policy and procedures manual, or determine if any prior approval programme is in operation, prior to the installation of a new module /component
P0112-00	Intake Air Temperature Sensor 1 Circuit Low (Bank 1) - No sub type information	△ NOTE: - Circuit INLET_AIR_TEMP_SENSOR_A - ■ Intake air temperature sensor circuit short circuit to ground, short circuit to power, open circuit, high resistance ■ Intake air temperature sensor failure	■ Refer to the electrical circuit diagrams and check intake air temperature sensor circuit for short circuit to ground, short circuit to power, open circuit, high resistance ■ Check and install a new intake air temperature sensor bank 1 as required. Refer to the warranty policy and procedures manual, or determine if any prior approval programme is in

			operation, prior to the installation of a new module/component
P0113-00	Intake Air Temperature Sensor 1 Circuit High (Bank 1) - No sub type information	**NOTE:** - Circuit INLET_AIR_TEMP_SENSOR_A - ■ Intake air temperature sensor circuit short circuit to power, open circuit, high resistance ■ Intake air temperature sensor failure	■ Refer to the electrical circuit diagrams and check intake air temperature sensor circuit for short circuit to power, open circuit, high resistance ■ Check and install a new intake air temperature sensor bank 1 as required. Refer to the warranty policy and procedures manual, or determine if any prior approval programme is in operation, prior to the installation of a new module/component
P0116-23	Engine Coolant Temperature Sensor 1 Circuit Range /Performance - Signal stuck low	■ The engine control module measures a signal that remains low when transitions are expected ■ Battery disconnection resulting in errors in engine off time (short soaks may look like long soaks) ■ Electric block heater applied and not detected ■ Connector is disconnected, connector pin is backed out, connector pin corrosion ■ Engine coolant temperature sensor failure ■ **Additional checks to carry out ONLY for Range Rover / L405 and Range Rover Sport / L494 vehicles equipped with Fuel Fired Booster Heater (FFBH) system** ■ Changeover valve - Fuel Fired Booster Heater (FFBH) system failure ■ This valve should only allow coolant into the engine if the engine coolant temperature is -25°	■ Leave vehicle turned off for a minimum of 8 hours and allow to soak to a stable temperature. Using the manufacturer approved diagnostic system check datalogger signals - Ambient Air Temperature - (0xF446) - Engine Coolant Temperature (0xF405) - Boost Air Temperature - Raw physical value (0x0341) - Intake Air Temperature (0xF40F) - Engine Coolant Temperature #2 (0x0489). All sensors should be within 20 degºC of each other ■ Inspect connectors for signs of water ingress, and pins for damage and/or corrosion ■ Refer to the electrical circuit diagrams and check connections are secure and wiring integrity

			C (-13°F) or below. When de-energized, the changeover valve connects the heater coolant circuit to the engine coolant circuit. When energized, the changeover valve isolates the heater coolant circuit from the engine coolant circuit. If this valve is de-energizing above -25°C (-13°F) it will be inadvertently allowing heated coolant into the engine and causing the DTC to set due to a mismatch between coolant temperature sensor 1 and all the other temperature sensors	■ Check and install new sensor that is biased higher or lower than the other sensors ■ **Additional checks to carry out ONLY for Range Rover / L405 and Range Rover Sport / L494 vehicles equipped with Fuel Fired Booster Heater (FFBH) system** ■ Check and install new a changeover valve - Fuel Fired Booster Heater (FFBH) system
P0116-24	Engine Coolant Temperature Sensor 1 Circuit Range /Performance - Signal stuck high	■ The engine control module measures a signal that remains high when transitions are expected ■ Battery disconnection resulting in errors in engine off time (short soaks may look like long soaks) ■ Electric block heater applied and not detected ■ Connector is disconnected, connector pin is backed out, connector pin corrosion ■ Engine coolant temperature sensor failure ■ **Additional checks to carry out ONLY for Range Rover / L405 and Range Rover Sport / L494 vehicles equipped with Fuel Fired Booster Heater (FFBH) system** ■ Changeover valve - Fuel Fired Booster Heater (FFBH) system failure ■ This valve should only allow coolant into the engine if the engine coolant temperature is -25° C (-13°F) or below. When de-energized, the changeover valve connects the heater coolant circuit to the engine coolant circuit. When	■ Leave vehicle turned off for a minimum of 8 hours and allow to soak to a stable temperature. Using the manufacturer approved diagnostic system check datalogger signals - Ambient Air Temperature - (0xF446) - Engine Coolant Temperature (0xF405) - Boost Air Temperature - Raw physical value (0x0341) - Intake Air Temperature (0xF40F) - Engine Coolant Temperature #2 (0x0489). All sensors should be within 20 degºC of each other ■ Inspect connectors for signs of water ingress, and pins for damage and/or corrosion ■ Refer to the electrical circuit diagrams and check connections are secure and wiring integrity ■ Check and install new sensor that is biassed higher or lower than the other sensors

		energized, the changeover valve isolates the heater coolant circuit from the engine coolant circuit. If this valve is de-energizing above -25°C (-13°F) it will be inadvertently allowing heated coolant into the engine and causing the DTC to set due to a mismatch between coolant temperature sensor 1 and all the other temperature sensors	■ **Additional checks to carry out ONLY for Range Rover / L405 and Range Rover Sport / L494 vehicles equipped with Fuel Fired Booster Heater (FFBH) system** ■ Check and install new a changeover valve - Fuel Fired Booster Heater (FFBH) system
P0116-29	Engine Coolant Temperature Sensor 1 Circuit Range /Performance - Signal invalid	**NOTE:** - Circuit COOLANT_TEMP_SENSOR - ■ Low coolant level ■ Engine coolant temperature sensor 1 sensing circuit - intermittent high resistance ■ Engine coolant temperature sensor 1 failure ■ Possible airlock in cooling system	■ Fill cooling system to correct level and specification ■ Using the manufacturer approved diagnostic system check datalogger signal, Engine Coolant Temperature Sensor Voltage (0x0357) ■ Refer to the electrical circuit diagrams and check engine coolant temperature sensor 1 circuit for intermittent high resistance ■ Check and install new engine coolant temperature sensor 1 as required. Refer to the warranty policy and procedures manual, or determine if any prior approval programme is in operation, prior to the installation of a new module/component ■ Bleed cooling system
P0117-16	Engine Coolant Temperature Sensor 1 Circuit Low -	**NOTE:** - Circuit COOLANT_TEMP_SENSOR -	■ Using the manufacturer approved diagnostic system check datalogger signal, Engine Coolant Temperature Sensor Voltage (0x0357)

	Circuit voltage below threshold	■ Engine coolant temperature sensor 1 circuit short circuit to ground ■ Engine coolant temperature sensor 1 failure	■ Refer to the electrical circuit diagrams and check engine coolant temperature sensor 1 circuit for short circuit to ground ■ Check and install a new Engine coolant temperature sensor 1 as required. Refer to the warranty policy and procedures manual, or determine if any prior approval programme is in operation, prior to the installation of a new module/component
P0118-17	Engine Coolant Temperature Sensor 1 Circuit High - Circuit voltage above threshold	**NOTE:** - Circuit COOLANT_TEMP_SENSOR - ■ Engine coolant temperature sensor 1 circuit short circuit to power, open circuit, sensor disconnected ■ Engine coolant temperature sensor 1 failure	■ Using the manufacturer approved diagnostic system check datalogger signal, Engine Coolant Temperature Sensor Voltage (0x0357) ■ Refer to the electrical circuit diagrams and check engine coolant temperature sensor 1 circuit for short circuit to power, open circuit, sensor disconnected ■ Check and install new engine coolant temperature sensor 1 as required. Refer to the warranty policy and procedures manual, or determine if any prior approval programme is in operation, prior to the installation of a new module/component
P0121-00	Throttle/Pedal Position Sensor A Circuit Range	■ Corrupt engine control module software flash ■ Engine control module power supply circuit open circuit, high resistance	■ Using the manufacturer approved diagnostic system check and install latest relevant level of software to the engine control module

	/Performance - No sub type information	■ Engine control module damage through water ingress, internal fault	■ Refer to the electrical circuit diagrams and check engine control module power supply circuit for open circuit, high resistance ■ Check and install a new engine control module as required. Refer to the warranty policy and procedures manual, or determine if any prior approval programme is in operation, prior to the installation of a new module /component
P0122-00	Throttle/Pedal Position Sensor A Circuit Low - No sub type information	**NOTE:** - Circuit THROTTLE_POSITION_SENSOR_1 - ■ Throttle position sensor 1 circuit short circuit to ground, open circuit ■ Throttle position sensor 1 failure	■ Refer to the electrical circuit diagrams and check throttle position sensor 1 circuit for short circuit to ground, open circuit ■ Clear DTC and repeat automated diagnostic procedure using the manufacturer approved diagnostic system. If DTC remains suspect the electronic throttle unit ■ Check and install a new electronic throttle unit as required. Refer to the warranty policy and procedures manual, or determine if any prior approval programme is in operation, prior to the installation of a new module /component
P0123-00	Throttle/Pedal Position Sensor	**NOTE:** - Circuit THROTTLE_POSITION_SENSOR_1 -	■ Refer to the electrical circuit diagrams and check throttle position sensor 1 circuit for short circuit to ground, short circuit to power, open circuit

	A Circuit High - No sub type information	■ Throttle position sensor 1 circuit short circuit to ground, short circuit to power, open circuit ■ Throttle position sensor 1 failure	■ Clear DTC and repeat automated diagnostic procedure using the manufacturer approved diagnostic system. If DTC remains suspect the electronic throttle unit ■ Check and install a new electronic throttle unit as required. Refer to the warranty policy and procedures manual, or determine if any prior approval programme is in operation, prior to the installation of a new module /component
P0125-00	Insufficient Coolant Temp For Closed Loop Fuel Control - No sub type information	■ Coolant temperature sensor 1 circuit, open circuit, high resistance ■ Engine coolant temperature sensor 1 failure	■ Refer to the electrical circuit diagrams and check engine coolant temperature sensor 1 circuit for open circuit, high resistance ■ Check and install a new engine coolant temperature sensor 1. Refer to the warranty policy and procedures manual, or determine if any prior approval programme is in operation, prior to the installation of a new module /component
P0126-26	Insufficient Coolant Temp For Stable Operation - Signal rate of change below threshold	■ Thermostat stuck open ■ Coolant temperature coolant sensor circuit, short circuit to ground, short circuit to power, open circuit	■ Refer to the electrical circuit diagrams and check engine coolant temperature sensor 1 circuit for short circuit to ground, short circuit to power, open circuit ■ Check for related coolant temperature coolant sensor faults. Check and install a new thermostat as required. Refer to

			the warranty policy and procedures manual, or determine if any prior approval programme is in operation, prior to the installation of a new module /component
P0128-00	Coolant Thermostat (Coolant Temp Below Thermostat Regulating Temperature) - No sub type information	■ Thermostat stuck open ■ Cooling fans running continuously or at a high duty	■ Check for related coolant temperature coolant sensor faults ■ Check cooling fans for correct operation. Repair as required ■ Check and install a new thermostat as required. Refer to the warranty policy and procedures manual, or determine if any prior approval programme is in operation, prior to the installation of a new module/component
P0131-00	O2 Circuit Low Voltage (Bank 1, Sensor 1) - No sub type information	■ Pre-catalyst oxygen sensor odd disconnected ■ Pre-catalyst oxygen sensor odd variable circuit, short circuit to ground ■ Pre-catalyst oxygen sensor odd variable circuit, open circuit ■ Pre-catalyst oxygen sensor odd heater fault ■ Pre-catalyst oxygen sensor odd failure	■ Check pre-catalyst oxygen sensor odd connector is connected ■ Refer to the electrical circuit diagrams and check pre-catalyst oxygen sensor odd variable circuit for short circuit to ground, open circuit ■ Check pre-catalyst oxygen sensor odd heater circuit ■ Check and install a new pre-catalyst oxygen sensor odd as required. Refer to the warranty policy and procedures manual, or determine if any prior approval programme is in operation, prior to the installation of a new module /component

P0131-1A	O2 Sensor Circuit Low Voltage (Bank 1 Sensor 1) - Circuit resistance below threshold	**NOTE:** - Circuit UHEGO_A_VARIABLE - ■ Pre-catalyst oxygen sensor odd disconnected ■ Pre-catalyst oxygen sensor odd variable circuit, short circuit to ground ■ Pre-catalyst oxygen sensor odd variable circuit, open circuit ■ Pre-catalyst oxygen sensor odd heater fault ■ Pre-catalyst oxygen sensor odd failure	■ Check pre-catalyst oxygen sensor odd connector is connected ■ Refer to the electrical circuit diagrams and check pre-catalyst oxygen sensor odd variable circuit for short circuit to ground, open circuit ■ Check pre-catalyst oxygen sensor odd heater circuit ■ Check and install a new pre-catalyst oxygen sensor odd as required. Refer to the warranty policy and procedures manual, or determine if any prior approval programme is in operation, prior to the installation of a new module /component
P0132-00	O2 Circuit High Voltage (Bank 1, Sensor 1) - No sub type information	■ Pre-catalyst oxygen sensor odd disconnected ■ Pre-catalyst oxygen sensor odd variable circuit, short circuit to power ■ Pre-catalyst oxygen sensor odd variable circuit, open circuit ■ Pre-catalyst oxygen sensor odd heater fault ■ Pre-catalyst oxygen sensor odd failure	■ Check pre-catalyst oxygen sensor odd connector is connected ■ Refer to the electrical circuit diagrams and check pre-catalyst oxygen sensor odd variable circuit for short circuit to power, open circuit ■ Check pre-catalyst oxygen sensor odd heater circuit ■ Check and install a new pre-catalyst oxygen sensor odd as required. Refer to the warranty policy and procedures manual, or determine if any prior approval programme is in operation, prior to the installation of a new module /component

P0132-1B	O2 Sensor Circuit High Voltage (Bank 1 Sensor 1) - Circuit resistance above threshold	**NOTE:** - Circuit UHEGO_A_VARIABLE - ■ Pre-catalyst oxygen sensor odd disconnected ■ Pre-catalyst oxygen sensor odd variable circuit, short circuit to power ■ Pre-catalyst oxygen sensor odd variable circuit, open circuit ■ Pre-catalyst oxygen sensor odd heater fault ■ Pre-catalyst oxygen sensor odd failure	■ Check pre-catalyst oxygen sensor odd connector is connected ■ Refer to the electrical circuit diagrams and check pre-catalyst oxygen sensor odd variable circuit for short circuit to power, open circuit ■ Check pre-catalyst oxygen sensor odd heater circuit ■ Check and install a new pre-catalyst oxygen sensor odd as required. Refer to the warranty policy and procedures manual, or determine if any prior approval programme is in operation, prior to the installation of a new module /component
P0133-00	O2 Circuit Slow Response (Bank 1, Sensor 1) - No sub type information	**NOTE:** - Circuit UHEGO_A_VARIABLE - ■ Exhaust leak ■ Pre-catalyst oxygen sensor odd to engine control module wiring shield high resistance ■ Fuel control system fault ■ Pre-catalyst oxygen sensor odd failure	■ Check pre-catalyst oxygen sensor odd is correctly installed in exhaust manifold ■ Check for and rectify any exhaust leak between cylinder head and catalytic converter ■ Refer to the electrical circuit diagrams and check pre-catalyst oxygen sensor odd to engine control module wiring shield for high resistance ■ Check fuel control system for failure ■ Check and install a new pre-catalyst oxygen sensor odd as required. Refer to the warranty policy and procedures manual, or determine if any prior

			approval programme is in operation, prior to the installation of a new module /component
P0134-00	O2 Circuit No Activity Detected (Bank 1, Sensor 1) - No sub type information	**NOTE:** - Circuit UHEGO_A_VARIABLE - ■ Pre-catalyst oxygen sensor odd circuit short circuit to ground, short circuit to power, open circuit ■ Pre-catalyst oxygen sensor odd failure	■ Refer to the electrical circuit diagrams and check pre-catalyst oxygen sensor odd circuit for short circuit to ground, short circuit to power, open circuit ■ Check and install a new pre-catalyst oxygen sensor odd as required. Refer to the warranty policy and procedures manual, or determine if any prior approval programme is in operation, prior to the installation of a new module /component
P0137-00	O2 Circuit Low Voltage (Bank 1, Sensor 2) - No sub type information	**NOTE:** - Circuit HEGO_SENSOR_A - ■ Post catalyst oxygen sensor - odd, sensing circuit short circuit to ground, high resistance, open circuit ■ Damaged or blocked catalyst ■ Air leak between catalyst and exhaust manifold ■ Post catalyst oxygen sensor - odd, failure	■ Refer to the electrical circuit diagrams and check post catalyst oxygen sensor - odd, sensing circuit for short circuit to ground, high resistance, open circuit ■ Check for damaged or blocked catalyst ■ Check for air leak between catalyst and exhaust manifold ■ Check and install new post catalyst oxygen sensor - odd, as required. Refer to the warranty policy and procedures manual, or determine if any prior approval programme is in operation, prior to the installation of a new module /component
P0138-	O2 Circuit High		

00	Voltage (Bank 1, Sensor 2) - No sub type information	**NOTE:** - Circuit HEGO_SENSOR_A - ■ Post catalyst oxygen sensor - odd, sensing circuit short circuit to power ■ Post catalyst oxygen sensor - odd, tip damaged, blocked, poisoned ■ Catalyst blocked ■ Post catalyst oxygen sensor - odd, failure	■ Refer to the electrical circuit diagrams and check post catalyst oxygen sensor - odd, sensing circuit for short circuit to power ■ Check post catalyst oxygen sensor - odd, tip for damage, blockage, poisoned, install a new sensor as required ■ Check for blocked catalyst ■ Check and install new catalyst as required. Check and install new post catalyst oxygen sensor - odd, as required. Refer to the warranty policy and procedures manual, or determine if any prior approval programme is in operation, prior to the installation of a new module/component
P0139-00	O2 Circuit Slow Response (Bank 1, Sensor 2) - No sub type information	**NOTE:** - Circuit HEGO_SENSOR_A - ■ Excessive oil consumption ■ Post catalyst oxygen sensor - odd, tip damaged, blocked, poisoned	■ Check for excessive oil consumption. Repair as required ■ Check for related DTCs. Check post catalyst oxygen sensor - odd, tip for damage, blockage, poisoned, install a new sensor as required. Refer to the warranty policy and procedures manual, or determine if any prior approval programme is in operation, prior to the installation of a new module /component
P0140-00	O2 Circuit No Activity	**NOTE:**	■ Refer to the electrical circuit diagrams and check post catalyst oxygen sensor

	Detected (Bank 1, Sensor 2) - No sub type information	- Circuit HEGO_SENSOR_A - ■ Post catalyst oxygen sensor - odd, sensing circuit short circuit to ground, short circuit to power, high resistance, open circuit ■ Air leak between catalyst and exhaust manifold ■ Post catalyst oxygen sensor - odd, tip damaged, blocked, poisoned ■ Post catalyst oxygen sensor - odd, failure	- odd, sensing circuit for short circuit to ground, short circuit to power, high resistance, open circuit ■ Check for air leak between catalyst and exhaust manifold ■ Check post catalyst oxygen sensor - odd, tip for damage, blockage, poisoned, install a new sensor as required ■ Check for excessive oil consumption. Repair as required ■ Check and install new post catalyst oxygen sensor - odd, as required. Refer to the warranty policy and procedures manual, or determine if any prior approval programme is in operation, prior to the installation of a new module /component
P0141-00	O2 Heater Circuit (Bank 1, Sensor 2) - No sub type information	**NOTE:** - Circuit HTR_HEGO_A - ■ Post catalyst oxygen sensor - odd, sensing circuit short circuit to ground, short circuit to power, high resistance, open circuit ■ Air leak between catalyst and exhaust manifold ■ Catalyst oxygen sensor heater circuit control relay failure	■ Using the manufacturer approved diagnostic system check datalogger signal, Oxygen Sensor (O2S) Heater Duty Cycle Bank 1 Sensor 2 (0x03A2) ■ Refer to the electrical circuit diagrams and check post catalyst oxygen sensor - odd, sensing circuit for short circuit to ground, short circuit to power, high resistance, open circuit ■ Check for air leak between catalyst and exhaust manifold ■ Refer to the electrical circuit diagrams and check catalyst oxygen sensor

		■ Post catalyst oxygen sensor - odd, failure	heater circuit control relay circuit for short circuit to ground, short circuit to power, open circuit ■ Check and install a new catalyst oxygen sensor heater control relay, as required. Check and install new post catalyst oxygen sensor - odd, as required. Refer to the warranty policy and procedures manual, or determine if any prior approval programme is in operation, prior to the installation of a new module/component
P0148-65	Fuel Delivery Error - Signal has too few transitions / events	■ Injector(s) circuit, short circuit to ground, short circuit to power, high resistance ■ Injector(s) failure ■ Engine control module internal failure	■ Check for related injector DTCs ■ Refer to the electrical circuit diagrams and check injector(s) circuit for, short circuit to ground, short circuit to power, high resistance ■ Check and install a new injector(s) as required. Check and install a new engine control module as required. Refer to the warranty policy and procedures manual, or determine if any prior approval programme is in operation, prior to the installation of a new module/component
P0148-66	Fuel Delivery Error - Signal has too many transitions / events	■ Injector(s) circuit, short circuit to ground, short circuit to power, high resistance ■ Injector(s) failure ■ Engine control module internal failure	■ Check for related injector DTCs ■ Refer to the electrical circuit diagrams and check injector(s) circuit for, short circuit to ground, short circuit to power, high resistance

			■ Check and install a new injector(s) as required. Check and install a new engine control module as required. Refer to the warranty policy and procedures manual, or determine if any prior approval programme is in operation, prior to the installation of a new module/component
P0149-32	Fuel Timing Error - Signal low time < minimum	■ Injector(s) circuit, short circuit to ground, short circuit to power, high resistance ■ Injector(s) failure ■ Engine control module internal failure	■ Check for related injector DTCs ■ Refer to the electrical circuit diagrams and check injector(s) circuit for, short circuit to ground, short circuit to power, high resistance ■ Check and install a new injector(s) as required. Check and install a new engine control module as required. Refer to the warranty policy and procedures manual, or determine if any prior approval programme is in operation, prior to the installation of a new module/component
P0149-35	Fuel Timing Error - Signal high time > maximum	■ Injector(s) circuit, short circuit to ground, short circuit to power, high resistance ■ Injector(s) failure ■ Engine control module internal failure	■ Check for related injector DTCs ■ Refer to the electrical circuit diagrams and check injector(s) circuit for, short circuit to ground, short circuit to power, high resistance ■ Check and install a new injector(s) as required. Check and install a new engine control module as required. Refer to the warranty policy and

			procedures manual, or determine if any prior approval programme is in operation, prior to the installation of a new module/component
P0151-1A	O2 Sensor Circuit Low Voltage (Bank 2 Sensor 1) - Circuit resistance below threshold	**NOTE:** - Circuit UHEGO_B_VARIABLE - ■ Pre-catalyst oxygen sensor - even circuit short circuit to ground ■ Pre-catalyst oxygen sensor - even failure	■ Refer to the electrical circuit diagrams and check pre-catalyst oxygen sensor - even circuit for short circuit to ground ■ Check and install new pre catalyst oxygen sensor - even. Refer to the warranty policy and procedures manual, or determine if any prior approval programme is in operation, prior to the installation of a new module /component
P0152-1B	O2 Sensor Circuit Low Voltage (Bank 2 Sensor 1) - Circuit resistance above threshold	**NOTE:** - Circuit UHEGO_B_VARIABLE - ■ Pre-catalyst oxygen sensor - even circuit short circuit to power, disconnected ■ Pre-catalyst oxygen sensor - even failure	■ Refer to the electrical circuit diagrams and check pre-catalyst oxygen sensor - even circuit for short circuit to power, disconnected ■ Check and install new pre catalyst oxygen sensor - even. Refer to the warranty policy and procedures manual, or determine if any prior approval programme is in operation, prior to the installation of a new module /component
P0153-00	O2 Circuit Slow Response (Bank 2,	**NOTE:** - Circuit UHEGO_B_VARIABLE -	■ Check pre-catalyst oxygen sensor even is correctly installed in exhaust manifold

	Sensor 1) - No sub type information	■ Exhaust leak ■ Pre-catalyst oxygen sensor even to engine control module wiring shield high resistance ■ Pre-catalyst oxygen sensor even to engine control module signal circuit short circuit to ground ■ Fuel control system fault ■ Pre-catalyst oxygen sensor even failure	■ Check for and rectify any exhaust leak between cylinder head and catalytic converter ■ Refer to the electrical circuit diagrams and check pre-catalyst oxygen sensor even to engine control module wiring shield for high resistance ■ Refer to the electrical circuit diagrams and check Pre-catalyst oxygen sensor even to engine control module signal circuit for short circuit to ground ■ Check fuel control system for failure ■ Check and install a new pre-catalyst oxygen sensor even as required. Refer to the warranty policy and procedures manual, or determine if any prior approval programme is in operation, prior to the installation of a new module /component
P0154-00	O2 Circuit No Activity Detected (Bank 2, Sensor 1) - No sub type information	**NOTE:** - Circuit UHEGO_B_VARIABLE - ■ Pre-catalyst oxygen sensor even to engine control module wiring shield high resistance ■ Pre-catalyst oxygen sensor even to engine control module signal circuit short circuit to ground, high resistance, open circuit ■ Pre-catalyst oxygen sensor even failure	■ Check pre-catalyst oxygen sensor even is correctly installed in exhaust manifold ■ Refer to the electrical circuit diagrams and check pre-catalyst oxygen sensor even to engine control module wiring shield for high resistance ■ Refer to the electrical circuit diagrams and check pre-catalyst oxygen sensor even to engine control module signal circuit for short circuit to ground, high resistance, open circuit

			■ Check and install a new pre-catalyst oxygen sensor even as required. Refer to the warranty policy and procedures manual, or determine if any prior approval programme is in operation, prior to the installation of a new module /component
P0157-00	O2 Circuit Low Voltage (Bank 2, Sensor 2) - No sub type information	△ NOTE: - Circuit HEGO_SENSOR_B - ■ Post catalyst oxygen sensor - even, sensing circuit short circuit to ground, high resistance, open circuit ■ Air leak between catalyst and exhaust manifold ■ Post catalyst oxygen sensor - even, tip damaged, blocked, poisoned ■ Post catalyst oxygen sensor - even, failure	■ Refer to the electrical circuit diagrams and check post catalyst oxygen sensor - even, sensing circuit for short circuit to ground, high resistance, open circuit ■ Check for air leak between catalyst and exhaust manifold ■ Check post catalyst oxygen sensor - even, tip for damage, blockage, poisoned ■ Check and install new post catalyst oxygen sensor - even, as required. Refer to the warranty policy and procedures manual, or determine if any prior approval programme is in operation, prior to the installation of a new module/component
P0158-00	O2 Circuit High Voltage (Bank 2, Sensor 2) - No sub type information	△ NOTE: - Circuit HEGO_SENSOR_B -	■ Refer to the electrical circuit diagrams and check post catalyst oxygen sensor - even, sensing circuit for short circuit to power ■ Check post catalyst oxygen sensor - even, tip for damage, blockage, poisoned

		■ Post catalyst oxygen sensor - even, sensing circuit short circuit to power ■ Post catalyst oxygen sensor - even, tip damaged, blocked, poisoned ■ Post catalyst oxygen sensor - even, failure	■ Check and install new post catalyst oxygen sensor - even, as required. Refer to the warranty policy and procedures manual, or determine if any prior approval programme is in operation, prior to the installation of a new module/component
P0159-00	O2 Circuit Slow Response (Bank 2, Sensor 2) - No sub type information	△ NOTE: - Circuit HEGO_SENSOR_B - ■ Excessive oil consumption ■ Post catalyst oxygen sensor - even, tip damaged, blocked, poisoned ■ Post catalyst oxygen sensor - even, failure	■ Check for excessive oil consumption, repair as required ■ Check post catalyst oxygen sensor - even, tip for damage, blockage, poisoned, install a new sensor as required. Refer to the warranty policy and procedures manual, or determine if any prior approval programme is in operation, prior to the installation of a new module/component
P0160-00	O2 Circuit No Activity Detected (Bank 2, Sensor 2) - No sub type information	△ NOTE: - Circuit HEGO_SENSOR_B - ■ Post catalyst oxygen sensor - even, sensing circuit short circuit to ground, short circuit to power, high resistance, open circuit ■ Air leak between catalyst and exhaust manifold ■ Post catalyst oxygen sensor - even, tip damaged, blocked, poisoned	■ Refer to the electrical circuit diagrams and check post catalyst oxygen sensor - even, sensing circuit for short circuit to ground, short circuit to power, high resistance, open circuit ■ Check for air leak between catalyst and exhaust manifold ■ Check post catalyst oxygen sensor - even, tip for damage, blockage, poisoned ■ Check and install new post catalyst oxygen sensor - even, as required.

		■ Post catalyst oxygen sensor - even, failure	Refer to the warranty policy and procedures manual, or determine if any prior approval programme is in operation, prior to the installation of a new module/component
P0161-00	O2 Heater Circuit (Bank 2, Sensor 2) - No sub type information	**NOTE:** - Circuit HTR_HEGO_B - ■ Post catalyst oxygen sensor - even, sensing circuit short circuit to ground, short circuit to power, high resistance, open circuit ■ Post catalyst oxygen sensor - even, sensing circuit fuse failure ■ Catalyst oxygen sensor heater circuit control relay failure ■ Post catalyst oxygen sensor - even, failure	■ Refer to the electrical circuit diagrams and check post catalyst oxygen sensor - even, sensing circuit for short circuit to ground, short circuit to power, high resistance, open circuit ■ Refer to the electrical circuit diagrams and check Post catalyst oxygen sensor - even, sensing circuit fuse, replace as required ■ Refer to the electrical circuit diagrams and check catalyst oxygen sensor heater circuit control relay circuit for short circuit to ground, short circuit to power, open circuit ■ Check and install a new catalyst oxygen sensor heater control relay, as required. Check and install new post catalyst oxygen sensor - even, as required. Refer to the warranty policy and procedures manual, or determine if any prior approval programme is in operation, prior to the installation of a new module/component
P0171-00	System Too Lean (Bank 1) - No sub type	■ Air leak upstream of MAF/IAT sensor bank 1 ■ MAF/IAT sensor bank 1 circuit failure	

	information	■ MAF/IAT sensor bank 1 failure ■ Pre-catalyst oxygen sensor odd circuit failure ■ Pre-catalyst oxygen sensor odd failure ■ Post-catalyst oxygen sensor odd circuit failure ■ Post-catalyst oxygen sensor odd failure	■ Refer to the electrical circuit diagrams and check MAF/IAT sensor circuit, for short circuit to ground, short circuit power, high resistance, open circuit ■ Refer to the electrical circuit diagrams and check post catalyst oxygen sensor - even, sensing circuit for short circuit to ground, short circuit power, high resistance, open circuit ■ Check for leak from air intake system ■ Check for additional MAF/IAT sensor bank 1 related DTCs and refer to relevant DTC index ■ Check for additional pre-catalyst oxygen sensor odd related DTCs and refer to relevant DTC index ■ Check for additional post-catalyst oxygen sensor odd related DTCs and refer to relevant DTC index	
P0172-00	System Too Rich (Bank 1) - No sub type information	■ Restricted air cleaner ■ Leaking fuel injector(s) ■ MAF/IAT sensor bank 1 failure ■ Pre-catalyst oxygen sensor odd circuit failure ■ Pre-catalyst oxygen sensor odd failure ■ Post-catalyst oxygen sensor odd circuit failure ■ Post-catalyst oxygen sensor odd failure	■ Refer to the electrical circuit diagrams and check MAF/IAT sensor circuit, for short circuit to ground, short circuit power, high resistance, open circuit ■ Refer to the electrical circuit diagrams and check post catalyst oxygen sensor - even, sensing circuit for short circuit to ground, short circuit power, high resistance, open circuit ■ Check air cleaner element is free from restriction	

				■ Check for leaking injectors, install new injector(s) as required. Refer to the warranty policy and procedures manual, or determine if any prior approval programme is in operation, prior to the installation of a new module /component ■ Check for additional MAF/IAT sensor bank 1 related DTCs and refer to relevant DTC index ■ Check for additional pre-catalyst oxygen sensor odd related DTCs and refer to relevant DTC index ■ Check for additional post-catalyst oxygen sensor odd related DTCs and refer to relevant DTC index
	P0174-00	System Too Lean (Bank 2) - No sub type information	■ Air leak upstream of MAF/IAT sensor bank 2 ■ MAF/IAT sensor bank 2 circuit failure ■ MAF/IAT sensor bank 2 failure ■ Pre-catalyst oxygen sensor even circuit failure ■ Pre-catalyst oxygen sensor even failure ■ Post-catalyst oxygen sensor even circuit failure ■ Post-catalyst oxygen sensor even failure	■ Refer to the electrical circuit diagrams and check MAF/IAT sensor circuit, for short circuit to ground, short circuit power, high resistance, open circuit ■ Refer to the electrical circuit diagrams and check post catalyst oxygen sensor - even, sensing circuit for short circuit to ground, short circuit power, high resistance, open circuit ■ Check for leak from air intake system ■ Check for additional MAF/IAT sensor bank 2 related DTCs and refer to relevant DTC index

			■ Check for additional pre-catalyst oxygen sensor even related DTCs and refer to relevant DTC index ■ Check for additional post-catalyst oxygen sensor even related DTCs and refer to relevant DTC index
P0175-00	System Too Rich (Bank 2) - No sub type information	■ Restricted air cleaner ■ Leaking fuel injector(s) ■ MAF/IAT sensor bank 2 circuit failure ■ MAF/IAT sensor bank 2 failure ■ Pre-catalyst oxygen sensor even circuit failure ■ Pre-catalyst oxygen sensor even failure ■ Post-catalyst oxygen sensor even circuit failure ■ Post-catalyst oxygen sensor even failure	■ Refer to the electrical circuit diagrams and check MAF/IAT sensor circuit, for short circuit to ground, short circuit power, high resistance, open circuit ■ Refer to the electrical circuit diagrams and check post catalyst oxygen sensor - even, sensing circuit for short circuit to ground, short circuit power, high resistance, open circuit ■ Check for leak from air intake system ■ Check for additional MAF/IAT sensor bank 2 related DTCs and refer to relevant DTC index ■ Check for additional pre-catalyst oxygen sensor even related DTCs and refer to relevant DTC index ■ Check for additional post-catalyst oxygen sensor even related DTCs and refer to relevant DTC index
P018B-29	Fuel Pressure Sensor B	**NOTE:** - Circuit LOW_PRESS_FUEL_PRESS_SENSOR -	■ Using the manufacturer approved diagnostic system check datalogger signal, Fuel Rail Pressure - Low Range Sensor Voltage (0x0376)

	Circuit Range /Performance - Signal invalid	■ Fuel Filter or fuel system restriction ■ Fuel system leak ■ Fuel pump pressure sensor circuit short circuit to ground, short circuit to power, open circuit, high resistance ■ Fuel pump pressure sensor failure	■ Check for related fuel pump DTCs ■ Check the fuel system for restrictions or blockages ■ Refer to the electrical circuit diagrams and check fuel pump pressure sensor circuit for short circuit to power, open circuit, high resistance ■ Check and install a new fuel pump pressure sensor as required. Refer to the warranty policy and procedures manual, or determine if any prior approval programme is in operation, prior to the installation of a new module /component
P018C-00	Fuel Pressure Sensor B Circuit Low - No sub type information	**NOTE:** - Circuit LOW_PRESS_FUEL_PRESS_SENSOR - ■ Fuel pump pressure sensor circuit short circuit to ground, short circuit to power, open circuit, high resistance ■ Fuel pump pressure sensor failure	■ Using the manufacturer approved diagnostic system check datalogger signal, Fuel Rail Pressure - Low Range Sensor Voltage (0x0376) ■ Refer to the electrical circuit diagrams and check fuel pump pressure sensor circuit for short circuit to power, short circuit to ground, open circuit, high resistance ■ Check and install a new fuel pump pressure sensor as required. Refer to the warranty policy and procedures manual, or determine if any prior approval programme is in operation, prior to the installation of a new module /component

P018D-00	Fuel Pressure Sensor B Circuit High - No sub type information	**NOTE:** - Circuit LOW_PRESS_FUEL_PRESS_SENSOR - ■ Fuel pump pressure sensor circuit short circuit to ground, short circuit to power, open circuit, high resistance ■ Fuel pump pressure sensor failure	■ Using the manufacturer approved diagnostic system check datalogger signal, Fuel Rail Pressure - Low Range Sensor Voltage (0x0376) ■ Refer to the electrical circuit diagrams and check fuel pump pressure sensor circuit for short circuit to power, short circuit to ground, open circuit, high resistance ■ Check and install a new fuel pump pressure sensor as required. Refer to the warranty policy and procedures manual, or determine if any prior approval programme is in operation, prior to the installation of a new module /component
P0191-00	Fuel Rail Pressure Sensor A Circuit Range /Performance - No sub type information	**NOTE:** - Circuit FUEL_HIGH_PRESS_SENSOR - ■ Fuel rail pressure sensor short circuit to ground, short circuit to power, open circuit, high resistance ■ Fuel rail pressure sensor A failure	■ Using the manufacturer approved diagnostic system check datalogger signal, Fuel Rail Pressure Sensor - High Range Sensor Voltage (0x0377) ■ Refer to the electrical circuit diagrams and check fuel rail pressure sensor A circuit for short circuit to power, short circuit to ground, high resistance, open circuit, terminal damage or corrosion ■ Check and install a new fuel rail pressure sensor A as required. Refer to the warranty policy and procedures manual, or determine if any prior approval programme is in operation, prior to the installation of a new module /component

P0192-00	Fuel Rail Pressure Sensor A Circuit Low - No sub type information	**NOTE:** - Circuit FUEL_HIGH_PRESS_SENSOR - ■ Fuel rail pressure sensor short circuit to ground, short circuit to power, open circuit, high resistance ■ Fuel rail pressure sensor A failure	■ Using the manufacturer approved diagnostic system check datalogger signal, Fuel Rail Pressure Sensor - High Range Sensor Voltage (0x0377) ■ Refer to the electrical circuit diagrams and check fuel rail pressure sensor A circuit for short circuit to power, short circuit to ground, high resistance, open circuit, terminal damage or corrosion ■ Check and install a new fuel rail pressure sensor A as required. Refer to the warranty policy and procedures manual, or determine if any prior approval programme is in operation, prior to the installation of a new module /component
P0193-00	Fuel Rail Pressure Sensor A Circuit High - No sub type information	**NOTE:** - Circuit FUEL_HIGH_PRESS_SENSOR - ■ Fuel rail pressure sensor short circuit to ground, short circuit to power, open circuit, high resistance ■ Fuel rail pressure sensor A failure	■ Using the manufacturer approved diagnostic system check datalogger signal, Fuel Rail Pressure Sensor - High Range Sensor Voltage (0x0377) ■ Refer to the electrical circuit diagrams and check fuel rail pressure sensor A circuit for short circuit to power, short circuit to ground, high resistance, open circuit, terminal damage or corrosion ■ Check and install a new fuel rail pressure sensor A as required. Refer to the warranty policy and procedures manual, or determine if any prior

			approval programme is in operation, prior to the installation of a new module /component
P0196-23	Engine Oil Temperature Sensor Range /Performance - Signal stuck low	**NOTE:** - Circuit OIL_QUALITY_SENSOR - ■ Oil temperature - level sensor circuit short circuit to ground, high resistance ■ Oil temperature - level sensor failure	■ Using the manufacturer approved diagnostic system check datalogger signal, Sump Oil Temperature - Measured (0x03F3) ■ Refer to the electrical circuit diagrams and check oil temperature - level sensor circuit for short circuit to ground, intermittent high resistance ■ Check and install new oil temperature - level sensor as required. Refer to the warranty policy and procedures manual, or determine if any prior approval programme is in operation, prior to the installation of a new module /component
P0196-24	Engine Oil Temperature Sensor Range /Performance - Signal stuck high	**NOTE:** - Circuit OIL_QUALITY_SENSOR - ■ Oil temperature - level sensor circuit short circuit to power ■ Oil temperature - level sensor failure	■ Using the manufacturer approved diagnostic system check datalogger signal, Sump Oil Temperature - Measured (0x03F3) ■ Refer to the electrical circuit diagrams and check oil temperature - level sensor circuit for intermittent short circuit to power ■ Check and install new oil temperature - level sensor as required. Refer to the warranty policy and procedures manual, or determine if any prior

			approval programme is in operation, prior to the installation of a new module /component
P0200-04	Injector Circuit - System internal failures	■ Engine control module injector circuit power failure ■ Engine control module power supply open circuit ■ Engine control module ground supply open circuit	■ Refer to the electrical circuit diagrams and check engine control module injector power circuit for open circuit ■ Refer to the electrical circuit diagrams and check the power and ground connections to the module ■ Check for misfire DTCs, if present suspect the engine control module
P0200-49	Injector Circuit - Internal electronic failure	■ Engine control module failure	■ Check for misfire DTCs, if present suspect the engine control module ■ Check and install a new engine control module as required. Refer to the warranty policy and procedures manual, or determine if any prior approval programme is in operation, prior to the installation of a new module /component
P0200-4B	Injector Circuit - Over temperature	■ Engine control module failure	■ If combined with misfire codes for one or both injector sets, then no service rectification is proposed ■ Check and install a new engine control module as required. Refer to the warranty policy and procedures manual, or determine if any prior

			approval programme is in operation, prior to the installation of a new module /component
P0201-13	Cylinder 1 Injector Circuit / Open - Circuit open	**NOTE:** - Circuit INJECTOR_1A - INJECTOR_1A_COMMON - ■ Fuel injector no.1 circuit open circuit ■ Injector disconnected ■ Injector high resistance	■ Refer to the electrical circuit diagrams and check fuel injector no.1 circuit for open circuit, disconnected injector, high resistance
P0202-13	Cylinder 2 Injector Circuit / Open - Circuit open	**NOTE:** - Circuit INJECTOR_1B - INJECTOR_1B_COMMON - ■ Fuel injector no.2 circuit open circuit ■ Injector disconnected ■ Injector high resistance	■ Refer to the electrical circuit diagrams and check fuel injector no.2 circuit for open circuit, disconnected injector, high resistance
P0203-13	Cylinder 3 Injector Circuit / Open - Circuit open	**NOTE:** - Circuit INJECTOR_2A - INJECTOR_2A_COMMON -	■ Refer to the electrical circuit diagrams and check fuel injector no.3 circuit for open circuit, disconnected injector, high resistance

		■ Fuel injector no.3 circuit open circuit ■ Injector disconnected ■ Injector high resistance	
P0204-13	Cylinder 4 Injector Circuit / Open - Circuit open	**NOTE:** - Circuit INJECTOR_2B - INJECTOR_2B_COMMON - ■ Fuel injector no.4 circuit open circuit ■ Injector disconnected ■ Injector high resistance	■ Refer to the electrical circuit diagrams and check fuel injector no.4 circuit for open circuit, disconnected injector, high resistance
P0205-13	Cylinder 5 Injector Circuit / Open - Circuit open	**NOTE:** - Circuit INJECTOR_3A - INJECTOR_3A_COMMON - ■ Fuel injector no.5 circuit open circuit ■ Injector disconnected ■ Injector high resistance	■ Refer to the electrical circuit diagrams and check fuel injector no.5 circuit for open circuit, disconnected injector, high resistance
P0206-	Cylinder 6	**NOTE:**	

13	Injector Circuit / Open - Circuit open	- Circuit INJECTOR_3B - INJECTOR_3B_COMMON - ■ Fuel injector no.6 circuit open circuit ■ Injector disconnected ■ Injector high resistance	■ Refer to the electrical circuit diagrams and check fuel injector no.6 circuit for open circuit, disconnected injector, high resistance
P0207-13	Cylinder 7 Injector Circuit / Open - Circuit open	**NOTE:** - Circuit INJECTOR_4A - INJECTOR_4A_COMMON - ■ Fuel injector no.7 circuit open circuit ■ Injector disconnected ■ Injector high resistance	■ Refer to the electrical circuit diagrams and check fuel injector no.7 circuit for open circuit, disconnected injector, high resistance
P0208-13	Cylinder 8 Injector Circuit / Open - Circuit open	**NOTE:** - Circuit INJECTOR_4B - INJECTOR_4B_COMMON - ■ Fuel injector no.8 circuit open circuit ■ Injector disconnected ■ Injector high resistance	■ Refer to the electrical circuit diagrams and check fuel injector no.8 circuit for open circuit, disconnected injector, high resistance

P0222-00	Throttle/Pedal Position Sensor /Switch B Circuit Low - No sub type information	**NOTE:** - Circuit THROTTLE_POSITION_SENSOR_2 - ■ Throttle/pedal position sensor/switch B circuit open circuit, short circuit to ground ■ Throttle/pedal position sensor/switch B failure	■ Refer to the electrical circuit diagrams and check throttle/pedal position sensor /switch B circuit for open circuit, short circuit to ground ■ Check and install a new throttle/pedal position sensor/switch B as required. Refer to the warranty policy and procedures manual, or determine if any prior approval programme is in operation, prior to the installation of a new module/component
P0223-00	Throttle/Pedal Position Sensor /Switch B Circuit High - No sub type information	**NOTE:** - Circuit THROTTLE_POSITION_SENSOR_2 - ■ Throttle/pedal position sensor/switch B circuit open circuit, short circuit to power ■ Throttle/pedal position sensor/switch B failure	■ Refer to the electrical circuit diagrams and check throttle/pedal position sensor /switch B circuit for open circuit, short circuit to power ■ Check and install a new throttle/pedal position sensor/switch B as required. Refer to the warranty policy and procedures manual, or determine if any prior approval programme is in operation, prior to the installation of a new module/component
P0231-23	Fuel Pump Secondary Circuit Low - Signal stuck low	**NOTE:** - Circuit HIGH_PRESS_FUEL_PUMP_CTRL_2NEG - HIGH_PRESS_FUEL_PUMP_CTRL_2POS -	■ Check for related DTCs P0232-24 ■ Refer to the electrical circuit diagrams and check fuel pump driver module signal circuit for short circuit to ground, open circuit ■ Refer to the electrical circuit diagrams and check fuel pump driver module is

		■ Fuel pump driver module signal circuit short circuit to ground, open circuit ■ Fuel pump driver module is not energized with the ignition on ■ Fuel pump driver module failure	energized with the ignition on. Repair as required ■ Check and install a new fuel pump driver module as required. Refer to the warranty policy and procedures manual, or determine if any prior approval programme is in operation, prior to the installation of a new module /component
P0232-24	Fuel Pump Secondary Circuit Low - Signal stuck high	△ NOTE: - Circuit HIGH_PRESS_FUEL_PUMP_CTRL_2NEG - HIGH_PRESS_FUEL_PUMP_CTRL_2POS - ■ Fuel pump driver module signal circuit short circuit to ground, open circuit ■ Fuel pump driver module is not energized with the ignition on ■ Fuel pump driver module failure	■ Check for related DTCs P0231-23 ■ Refer to the electrical circuit diagrams and check fuel pump driver module signal circuit for short circuit to ground, open circuit ■ Refer to the electrical circuit diagrams and check fuel pump driver module is energized with the ignition on. Repair as required ■ Check and install a new fuel pump driver module as required. Refer to the warranty policy and procedures manual, or determine if any prior approval programme is in operation, prior to the installation of a new module /component
P0236-00	Turbocharger /Supercharger Boost Sensor A Circuit Range /Performance -	△ NOTE: - Circuit TMAP_PRESS_SENSOR -	■ Check air cleaner element is free from restriction ■ Check for leak from air intake system, rectify as required

	No sub type information	■ Blocked air cleaner element(s) ■ Intake manifold air leak ■ Manifold absolute pressure sensor 2 circuit short circuit to ground, short circuit to power, open circuit, high resistance ■ Engine breather leak ■ Carbon build up on throttle plate ■ Exhaust system blocked ■ Manifold absolute pressure sensor 2 failure ■ BARO sensor failure	■ Refer to the electrical circuit diagrams and check manifold absolute pressure sensor 2 circuit for short circuit to ground, short circuit to power, open circuit, high resistance ■ Ensure the engine breather system is correctly installed and in serviceable condition ■ Make sure throttle blade is clean of carbon ■ Check for blocked exhaust ■ Check for related BARO sensor DTC P0069-29 ■ Check and install a new manifold absolute pressure sensor 2 as required. Refer to the warranty policy and procedures manual, or determine if any prior approval programme is in operation, prior to the installation of a new module/component
P0237-00	Turbocharger /Supercharger Boost Sensor A Circuit Low - No sub type information	△ **NOTE:** - Circuit TMAP_PRESS_SENSOR - ■ Manifold absolute pressure sensor 2 circuit short circuit to ground, open circuit, high resistance ■ Manifold absolute pressure sensor 2 failure	■ Refer to the electrical circuit diagrams and check manifold absolute pressure sensor 2 circuit for short circuit to ground, open circuit, high resistance ■ Check and install a new manifold absolute pressure sensor 2 as required. Refer to the warranty policy and procedures manual, or determine if any prior approval programme is in operation, prior to the installation of a new module/component

P0238-00	Turbocharger /Supercharger Boost Sensor A Circuit High - No sub type information	**NOTE:** - Circuit TMAP_PRESS_SENSOR - ■ Manifold absolute pressure sensor circuit 2 short circuit to power, open circuit, high resistance ■ Manifold absolute pressure sensor 2 failure	■ Refer to the electrical circuit diagrams and check manifold absolute pressure sensor 2 circuit for short circuit to power, open circuit, high resistance ■ Check and install a new manifold absolute pressure sensor 2 as required. Refer to the warranty policy and procedures manual, or determine if any prior approval programme is in operation, prior to the installation of a new module/component
P0251-13	Injection Pump Fuel Metering Control A - Circuit open	**NOTE:** - Circuit HIGH_PRESS_FUEL_PUMP_CTRL_1NEG - HIGH_PRESS_FUEL_PUMP_CTRL_2NEG - ■ Fuel rail pressure sensor circuit, open circuit	■ Refer to the electrical circuit diagrams and check fuel rail pressure sensor circuit for open circuit
P0253-11	Injection Pump Fuel Metering Control A Low - Circuit short to ground	**NOTE:** - Circuit HIGH_PRESS_FUEL_PUMP_CTRL_1NEG - HIGH_PRESS_FUEL_PUMP_CTRL_2NEG - ■ Fuel rail pressure sensor circuit, short circuit to ground	■ Refer to the electrical circuit diagrams and check fuel rail pressure sensor circuit for short circuit to ground

P0254-12	Injection Pump Fuel Metering Control A High - Circuit short to battery	**NOTE:** - Circuit HIGH_PRESS_FUEL_PUMP_CTRL_1NEG - HIGH_PRESS_FUEL_PUMP_CTRL_2NEG - ■ Fuel rail pressure sensor circuit, short circuit to power	■ Refer to the electrical circuit diagrams and check fuel rail pressure sensor circuit for short circuit to power
P0256-13	Injection Pump Fuel Metering Control B - Circuit open	**NOTE:** - Circuit HIGH_PRESS_FUEL_PUMP_CTRL_1NEG - HIGH_PRESS_FUEL_PUMP_CTRL_2NEG - ■ Fuel rail pressure sensor circuit, open circuit	■ Refer to the electrical circuit diagrams and check fuel rail pressure sensor circuit for open circuit
P0258-11	Injection Pump Fuel Metering Control B Low - Circuit short to ground	**NOTE:** - Circuit HIGH_PRESS_FUEL_PUMP_CTRL_1NEG - HIGH_PRESS_FUEL_PUMP_CTRL_2NEG - ■ Fuel rail pressure sensor circuit, short circuit to ground	■ Refer to the electrical circuit diagrams and check fuel rail pressure sensor circuit for short circuit to ground
P0259-12	Injection Pump Fuel Metering	**NOTE:**	■ Refer to the electrical circuit diagrams and check fuel rail pressure sensor circuit for short circuit to power

	Control B High - Circuit short to battery	- Circuit HIGH_PRESS_FUEL_PUMP_CTRL_1NEG - HIGH_PRESS_FUEL_PUMP_CTRL_2NEG - ■ Fuel rail pressure sensor circuit, short circuit to power	
P025C-14	Fuel Pump Module Control Circuit Low - Circuit short to ground or open	NOTE: - Circuit FPDM control - ■ Fuel pump driver module control circuit, short circuit to ground, open circuit	■ Refer to the electrical circuit diagrams and check fuel pump driver module circuit short circuit to ground, open circuit
P025D-12	Fuel Pump Module Control Circuit High - Circuit short to battery	NOTE: - Circuit FPDM control - ■ Fuel pump driver module control circuit, short circuit to power	■ Refer to the electrical circuit diagrams and check fuel pump driver module circuit short circuit to power
P0261-11	Cylinder 1 Injector Circuit Low - Circuit short to ground	NOTE: - Circuit INJECTOR_1A - INJECTOR_1A_COMMON -	■ Refer to the electrical circuit diagrams and check fuel injector no.1 circuit for short circuit to ground

		■ Fuel injector no.1 circuit short circuit to ground	
P0261-12	Cylinder 1 Injector Circuit Low - Circuit short to battery	**NOTE:** - Circuit INJECTOR_1A - INJECTOR_1A_COMMON - ■ Fuel injector no.1 circuit short circuit to power	■ Refer to the electrical circuit diagrams and check fuel injector no.1 circuit for short circuit to power
P0262-01	Cylinder 1 Injector Circuit High - General electrical failure	**NOTE:** - Circuit INJECTOR_1A - INJECTOR_1A_COMMON - ■ Fuel injector no.1 circuit short circuit to ground, short circuit to power	■ Refer to the electrical circuit diagrams and check fuel injector no.1 circuit for short circuit to ground, short circuit to power
P0262-12	Cylinder 1 Injector Circuit High - Circuit short to battery	**NOTE:** - Circuit INJECTOR_1A - INJECTOR_1A_COMMON - ■ Fuel injector no.1 circuit short circuit to power	■ Refer to the electrical circuit diagrams and check fuel injector no.1 circuit for short circuit to power
P0264-	Cylinder 2	**NOTE:**	

11	Injector Circuit Low - Circuit short to ground	- Circuit INJECTOR_1B - INJECTOR_1B_COMMON - ■ Fuel injector no.2 circuit short circuit to ground	■ Refer to the electrical circuit diagrams and check fuel injector no.2 circuit for short circuit to ground
P0264-12	Cylinder 2 Injector Circuit Low - Circuit short to battery	NOTE: - Circuit INJECTOR_1B - INJECTOR_1B_COMMON - ■ Fuel injector no.2 circuit short circuit to power	■ Refer to the electrical circuit diagrams and check fuel injector no.2 circuit for short circuit to power
P0265-01	Cylinder 2 Injector Circuit High - General electrical failure	NOTE: - Circuit INJECTOR_1B - INJECTOR_1B_COMMON - ■ Fuel injector no.2 circuit short circuit to ground, short circuit to power	■ Refer to the electrical circuit diagrams and check fuel injector no.2 circuit for short circuit to ground, short circuit to power
P0265-12	Cylinder 2 Injector Circuit High - Circuit short to battery	NOTE: - Circuit INJECTOR_1B - INJECTOR_1B_COMMON -	■ Refer to the electrical circuit diagrams and check fuel injector no.2 circuit for short circuit to power

		■ Fuel injector no.2 circuit short circuit to power	
P0267-11	Cylinder 3 Injector Circuit Low - Circuit short to ground	**NOTE:** - Circuit INJECTOR_2A - INJECTOR_2A_COMMON - ■ Fuel injector no.3 circuit short circuit to ground	■ Refer to the electrical circuit diagrams and check fuel injector no.3 circuit for short circuit to ground
P0267-12	Cylinder 3 Injector Circuit Low - Circuit short to battery	**NOTE:** - Circuit INJECTOR_2A - INJECTOR_2A_COMMON - ■ Fuel injector no.3 circuit short circuit to power	■ Refer to the electrical circuit diagrams and check fuel injector no.3 circuit for short circuit to power
P0268-01	Cylinder 3 Injector Circuit High - General electrical failure	**NOTE:** - Circuit INJECTOR_2A - INJECTOR_2A_COMMON - ■ Fuel injector no.3 circuit short circuit to ground, short circuit to power	■ Refer to the electrical circuit diagrams and check fuel injector no.3 circuit for short circuit to ground, short circuit to power
P0268-	Cylinder 3		

12	Injector Circuit High - Circuit short to battery	NOTE: - Circuit INJECTOR_2A - INJECTOR_2A_COMMON - ■ Fuel injector no.3 circuit short circuit to power	■ Refer to the electrical circuit diagrams and check fuel injector no.3 circuit for short circuit to power
P0270-11	Cylinder 4 Injector Circuit Low - Circuit short to ground	NOTE: - Circuit INJECTOR_2B - INJECTOR_2B_COMMON - ■ Fuel injector no.4 circuit short circuit to ground	■ Refer to the electrical circuit diagrams and check fuel injector no.4 circuit for short circuit to ground
P0270-12	Cylinder 4 Injector Circuit Low - Circuit short to battery	NOTE: - Circuit INJECTOR_2B - INJECTOR_2B_COMMON - ■ Fuel injector no.4 circuit short circuit to power	■ Refer to the electrical circuit diagrams and check fuel injector no.4 circuit for short circuit to power
P0271-01	Cylinder 4 Injector Circuit High - General electrical failure	NOTE: - Circuit INJECTOR_2B - INJECTOR_2B_COMMON -	■ Refer to the electrical circuit diagrams and check fuel injector no.4 circuit for short circuit to ground, short circuit to power

		■ Fuel injector no.4 circuit short circuit to ground, short circuit to power	
P0271-12	Cylinder 4 Injector Circuit High - Circuit short to battery	**NOTE:** - Circuit INJECTOR_2B - INJECTOR_2B_COMMON - ■ Fuel injector no.4 circuit short circuit to power	■ Refer to the electrical circuit diagrams and check fuel injector no.4 circuit for short circuit to power
P0273-11	Cylinder 5 Injector Circuit Low - Circuit short to ground	**NOTE:** - Circuit INJECTOR_3A - INJECTOR_3A_COMMON - ■ Fuel injector no.5 circuit short circuit to ground	■ Refer to the electrical circuit diagrams and check fuel injector no.5 circuit for short circuit to ground
P0273-12	Cylinder 5 Injector Circuit Low - Circuit short to battery	**NOTE:** - Circuit INJECTOR_3A - INJECTOR_3A_COMMON - ■ Fuel injector no.5 circuit short circuit to power	■ Refer to the electrical circuit diagrams and check fuel injector no.5 circuit for short circuit to power

P0274-01	Cylinder 5 Injector Circuit High - General electrical failure	**NOTE:** - Circuit INJECTOR_3A - INJECTOR_3A_COMMON - ■ Fuel injector no.5 circuit short circuit to ground, short circuit to power	■ Refer to the electrical circuit diagrams and check fuel injector no.5 circuit for short circuit to ground, short circuit to power
P0274-12	Cylinder 5 Injector Circuit High - Circuit short to battery	**NOTE:** - Circuit INJECTOR_3A - INJECTOR_3A_COMMON - ■ Fuel injector no.5 circuit short circuit to power	■ Refer to the electrical circuit diagrams and check fuel injector no.5 circuit for short circuit to power
P0276-11	Cylinder 6 Injector Circuit Low - Circuit short to ground	**NOTE:** - Circuit INJECTOR_3B - INJECTOR_3B_COMMON - ■ Fuel injector no.6 circuit short circuit to ground	■ Refer to the electrical circuit diagrams and check fuel injector no.6 circuit for short circuit to ground
P0276-12	Cylinder 6 Injector Circuit Low - Circuit short to battery	**NOTE:** - Circuit INJECTOR_3B - INJECTOR_3B_COMMON -	■ Refer to the electrical circuit diagrams and check fuel injector no.6 circuit for short circuit to power

		■ Fuel injector no.6 circuit short circuit to power	
P0277-01	Cylinder 6 Injector Circuit High - General electrical failure	**NOTE:** - Circuit INJECTOR_3B - INJECTOR_3B_COMMON - ■ Fuel injector no.6 circuit short circuit to ground, short circuit to power	■ Refer to the electrical circuit diagrams and check fuel injector no.6 circuit for short circuit to ground, short circuit to power
P0277-12	Cylinder 6 Injector Circuit High - Circuit short to battery	**NOTE:** - Circuit INJECTOR_3B - INJECTOR_3B_COMMON - ■ Fuel injector no.6 circuit short circuit to power	■ Refer to the electrical circuit diagrams and check fuel injector no.6 circuit for short circuit to power
P0279-11	Cylinder 7 Injector Circuit Low - Circuit short to ground	**NOTE:** - Circuit INJECTOR_4A - INJECTOR_4A_COMMON - ■ Fuel injector no.7 circuit short circuit to ground	■ Refer to the electrical circuit diagrams and check fuel injector no.7 circuit for short circuit to ground

P0279-12	Cylinder 7 Injector Circuit Low - Circuit short to battery	**NOTE:** - Circuit INJECTOR_4A - INJECTOR_4A_COMMON - ■ Fuel injector no.7 circuit short circuit to power	■ Refer to the electrical circuit diagrams and check fuel injector no.7 circuit for short circuit to power
P0280-01	Cylinder 7 Injector Circuit High - General electrical failure	**NOTE:** - Circuit INJECTOR_4A - INJECTOR_4A_COMMON - ■ Fuel injector no.7 circuit short circuit to ground, short circuit to power	■ Refer to the electrical circuit diagrams and check fuel injector no.7 circuit for short circuit to ground, short circuit to power
P0280-12	Cylinder 7 Injector Circuit High - Circuit short to battery	**NOTE:** - Circuit INJECTOR_4A - INJECTOR_4A_COMMON - ■ Fuel injector no.7 circuit short circuit to power	■ Refer to the electrical circuit diagrams and check fuel injector no.7 circuit for short circuit to power
P0282-11	Cylinder 8 Injector Circuit Low - Circuit short to ground	**NOTE:**	■ Refer to the electrical circuit diagrams and check fuel injector no.8 circuit for short circuit to ground

		- Circuit INJECTOR_4B - INJECTOR_4B_COMMON - ■ Fuel injector no.8 circuit short circuit to ground	
P0282-12	Cylinder 8 Injector Circuit Low - Circuit short to battery	△ NOTE: - Circuit INJECTOR_4B - INJECTOR_4B_COMMON - ■ Fuel injector no.8 circuit short circuit to power	■ Refer to the electrical circuit diagrams and check fuel injector no.8 circuit for short circuit to power
P0283-01	Cylinder 8 Injector Circuit High - General electrical failure	△ NOTE: - Circuit INJECTOR_4B - INJECTOR_4B_COMMON - ■ Fuel injector no.8 circuit short circuit to ground, short circuit to power	■ Refer to the electrical circuit diagrams and check fuel injector no.8 circuit for short circuit to ground, short circuit to power
P0283-12	Cylinder 8 Injector Circuit High - Circuit short to battery	△ NOTE: - Circuit INJECTOR_4B - INJECTOR_4B_COMMON -	■ Refer to the electrical circuit diagrams and check fuel injector no.8 circuit for short circuit to power

		■ Fuel injector no.8 circuit short circuit to power	
P02EE-01	Cylinder 1 Injector Circuit Range /Performance - General electrical failure	**NOTE:** - Circuit INJECTOR_1A - INJECTOR_1A_COMMON - ■ Cylinder 1 injector low circuit short circuit to power ■ Cylinder 1 injector low circuit shorted to high circuit ■ Cylinder 1 injector failure	■ Refer to the electrical circuit diagrams and check cylinder 1 injector circuit for short circuit to power, short circuit together ■ Check and install a new cylinder 1 injector as required. Refer to the warranty policy and procedures manual, or determine if any prior approval programme is in operation, prior to the installation of a new module /component
P02EE-1C	Cylinder 1 Injector Circuit Range /Performance - Circuit voltage out of range	**NOTE:** - Circuit INJECTOR_1A - INJECTOR_1A_COMMON - ■ Engine control module failure	■ Using the manufacturer approved diagnostic system, check engine control module, for related DTCs and refer to the relevant DTC index
P02EF-01	Cylinder 2 Injector Circuit Range /Performance - General electrical failure	**NOTE:** - Circuit INJECTOR_1B - INJECTOR_1B_COMMON - ■ Cylinder 2 injector low circuit short circuit to power ■ Cylinder 2 injector low circuit shorted to high circuit	■ Refer to the electrical circuit diagrams and check cylinder 2 injector circuit for short circuit to power, short circuit together ■ Check and install a new cylinder 2 injector as required. Refer to the warranty policy and procedures manual, or determine if any prior approval programme is in operation,

		■ Cylinder 2 injector failure	prior to the installation of a new module /component
P02EF-1C	Cylinder 2 Injector Circuit Range /Performance - Circuit voltage out of range	**NOTE:** - Circuit INJECTOR_1B - INJECTOR_1B_COMMON - ■ Engine control module failure	■ Using the manufacturer approved diagnostic system, check engine control module, for related DTCs and refer to the relevant DTC index
P02F0-01	Cylinder 3 Injector Circuit Range /Performance - General electrical failure	**NOTE:** - Circuit INJECTOR_2A - INJECTOR_2A_COMMON - ■ Cylinder 3 injector low circuit short circuit to power ■ Cylinder 3 injector low circuit shorted to high circuit ■ Cylinder 3 injector failure	■ Refer to the electrical circuit diagrams and check cylinder 3 injector circuit for short circuit to power, short circuit together ■ Check and install a new cylinder 3 injector as required. Refer to the warranty policy and procedures manual, or determine if any prior approval programme is in operation, prior to the installation of a new module /component
P02F0-1C	Cylinder 3 Injector Circuit Range /Performance - Circuit voltage out of range	**NOTE:** - Circuit INJECTOR_2A - INJECTOR_2A_COMMON - ■ Engine control module failure	■ Using the manufacturer approved diagnostic system, check engine control module, for related DTCs and refer to the relevant DTC index

P02F1-01	Cylinder 4 Injector Circuit Range /Performance - General electrical failure	**NOTE:** - Circuit INJECTOR_2B - INJECTOR_2B_COMMON - ■ Cylinder 4 injector low circuit short circuit to power ■ Cylinder 4 injector low circuit shorted to high circuit ■ Cylinder 4 injector failure	■ Refer to the electrical circuit diagrams and check cylinder 4 injector circuit for short circuit to power, short circuit together ■ Check and install a new cylinder 4 injector as required. Refer to the warranty policy and procedures manual, or determine if any prior approval programme is in operation, prior to the installation of a new module /component
P02F1-1C	Cylinder 4 Injector Circuit Range /Performance - Circuit voltage out of range	**NOTE:** - Circuit INJECTOR_2B - INJECTOR_2B_COMMON - ■ Engine control module failure	■ Using the manufacturer approved diagnostic system, check engine control module, for related DTCs and refer to the relevant DTC index
P02F2-01	Cylinder 5 Injector Circuit Range /Performance - General electrical failure	**NOTE:** - Circuit INJECTOR_3A - INJECTOR_3A_COMMON - ■ Cylinder 5 injector low circuit short circuit to power ■ Cylinder 5 injector low circuit shorted to high circuit ■ Cylinder 5 injector failure	■ Refer to the electrical circuit diagrams and check cylinder 5 injector circuit for short circuit to power, short circuit together ■ Check and install a new cylinder 5 injector as required. Refer to the warranty policy and procedures manual, or determine if any prior approval programme is in operation, prior to the installation of a new module /component

P02F2-1C	Cylinder 5 Injector Circuit Range /Performance - Circuit voltage out of range	**NOTE:** - Circuit INJECTOR_3A - INJECTOR_3A_COMMON - ■ Engine control module failure	■ Using the manufacturer approved diagnostic system, check engine control module, for related DTCs and refer to the relevant DTC index
P02F3-01	Cylinder 6 Injector Circuit Range /Performance - General electrical failure	**NOTE:** - Circuit INJECTOR_3B - INJECTOR_3B_COMMON - ■ Cylinder 6 injector low circuit short circuit to power ■ Cylinder 6 injector low circuit shorted to high circuit ■ Cylinder 6 injector failure	■ Refer to the electrical circuit diagrams and check cylinder 6 injector circuit for short circuit to power, short circuit together ■ Check and install a new cylinder 6 injector as required. Refer to the warranty policy and procedures manual, or determine if any prior approval programme is in operation, prior to the installation of a new module /component
P02F3-1C	Cylinder 6 Injector Circuit Range /Performance - Circuit voltage out of range	**NOTE:** - Circuit INJECTOR_3B - INJECTOR_3B_COMMON - ■ Engine control module failure	■ Using the manufacturer approved diagnostic system, check engine control module, for related DTCs and refer to the relevant DTC index
P02F4-	Cylinder 7		

01	Injector Circuit Range /Performance - General electrical failure	**NOTE:** - Circuit INJECTOR_4A - INJECTOR_4A_COMMON - ■ Cylinder 7 injector low circuit short circuit to power ■ Cylinder 7 injector low circuit shorted to high circuit ■ Cylinder 7 injector failure	■ Refer to the electrical circuit diagrams and check cylinder 7 injector circuit for short circuit to power, short circuit together ■ Check and install a new cylinder 7 injector as required. Refer to the warranty policy and procedures manual, or determine if any prior approval programme is in operation, prior to the installation of a new module /component
P02F4-1C	Cylinder 7 Injector Circuit Range /Performance - Circuit voltage out of range	**NOTE:** - Circuit INJECTOR_4A - INJECTOR_4A_COMMON - ■ Engine control module failure	■ Using the manufacturer approved diagnostic system, check engine control module, for related DTCs and refer to the relevant DTC index
P02F5-01	Cylinder 8 Injector Circuit Range /Performance - General electrical failure	**NOTE:** - Circuit INJECTOR_4B - INJECTOR_4B_COMMON - ■ Cylinder 8 injector low circuit short circuit to power ■ Cylinder 8 injector low circuit shorted to high circuit ■ Cylinder 8 injector failure	■ Refer to the electrical circuit diagrams and check cylinder 8 injector circuit for short circuit to power, short circuit together ■ Check and install a new cylinder 8 injector as required. Refer to the warranty policy and procedures manual, or determine if any prior approval programme is in operation, prior to the installation of a new module /component

P02F5-1C	Cylinder 8 Injector Circuit Range /Performance - Circuit voltage out of range	**NOTE:** - Circuit INJECTOR_4B - INJECTOR_4B_COMMON - ■ Engine control module failure	■ Using the manufacturer approved diagnostic system, check engine control module, for related DTCs and refer to the relevant DTC index
P0300-00	Random Misfire Detected - No sub type information	**NOTE:** **Monitor description.** Misfire detection ■ Poor fuel supply ■ Poor fuel quality ■ Fuel air ratio excessively too lean or too rich ■ Catalyst/exhaust system blockage ■ Spark plug(s) fouled or failed ■ Low Cylinder compression ■ Reluctor ring ■ Crankshaft position sensor failure ■ Camshaft position sensor failure ■ Injector or ignition coil connector is disconnected, connector pin is backed out, connector pin corrosion ■ Connector is disconnected, connector pin is backed out, connector pin corrosion	■ Check engine control module for related fuelling, ignition coil, injector or individual cylinder misfire DTCs and refer to this DTC index. Rectify these first ■ If this DTC is raised with P0301-00, P0302-00, P0303-00, P0304-00, P0305-00,P0306-00,P0307-00, or P0308-00, then the fuel delivery system and air intake system should be checked and rectified first ■ Using the manufacturer approved diagnostic system clear all stored DTCs using the 'Diagnosis Menu' tab and retest ■ Check the fuel system for blockages or restrictions, repair as required ■ Check for air leaks within the air intake system, repair as required ■ Check the catalyst/exhaust system for blockage, repair as required ■ Check and install a new spark plug(s) as required

			■ Injector circuit short circuit to ground, short circuit to power, open circuit ■ Injector(s) failure	■ Carry out cylinder compression checks as required ■ Inspect reluctor ring for damage ■ Check and install a new crankshaft position sensor as required ■ Check and install a new camshaft position sensor as required ■ Inspect connectors for signs of water ingress, and pins for damage and/or corrosion ■ Refer to the electrical circuit diagrams and check injector(s) circuit for short circuit to ground, short circuit to power, open circuit ■ Identify the misfiring cylinder. Check and install a new injector as required
P0301-00	Cylinder 1 Misfire Detected - No sub type information	△ **NOTE:** **Monitor description.** Misfire detection ■ Poor fuel supply ■ Poor fuel quality ■ Fuel air ratio excessively too lean or too rich ■ Catalyst/exhaust system blockage ■ Spark plug(s) fouled or failed ■ Low Cylinder compression	■ Check engine control module for related fuelling, ignition coil, injector or individual cylinder misfire DTCs and refer to this DTC index. Rectify these first ■ If this DTC is raised with P0300-00, then the fuel delivery system and air intake system should be checked and rectified first ■ Using the manufacturer approved diagnostic system clear all stored DTCs using the 'Diagnosis Menu' tab and retest	

			■ Reluctor ring ■ Crankshaft position sensor failure ■ Camshaft position sensor failure ■ Injector or ignition coil connector is disconnected, connector pin is backed out, connector pin corrosion ■ Connector is disconnected, connector pin is backed out, connector pin corrosion ■ Injector circuit short circuit to ground, short circuit to power, open circuit ■ Injector(s) failure	■ Check the fuel system for blockages or restrictions, repair as required ■ Check for air leaks within the air intake system, repair as required ■ Check the catalyst/exhaust system for blockage, repair as required ■ Check and install a new spark plug(s) as required ■ Carry out cylinder compression checks as required ■ Inspect reluctor ring for damage ■ Check and install a new crankshaft position sensor as required ■ Check and install a new camshaft position sensor as required ■ Inspect connectors for signs of water ingress, and pins for damage and/or corrosion ■ Refer to the electrical circuit diagrams and check injector(s) circuit for short circuit to ground, short circuit to power, open circuit ■ Identify the misfiring cylinder. Check and install a new injector as required
P0302-00	Cylinder 2 Misfire Detected - No sub type information	**NOTE:** **Monitor description.** Misfire detection	■ Check engine control module for related fuelling, ignition coil, injector or individual cylinder misfire DTCs and refer to this DTC index. Rectify these first	

			■ Poor fuel supply ■ Poor fuel quality ■ Fuel air ratio excessively too lean or too rich ■ Catalyst/exhaust system blockage ■ Spark plug(s) fouled or failed ■ Low Cylinder compression ■ Reluctor ring ■ Crankshaft position sensor failure ■ Camshaft position sensor failure ■ Injector or ignition coil connector is disconnected, connector pin is backed out, connector pin corrosion ■ Connector is disconnected, connector pin is backed out, connector pin corrosion ■ Injector circuit short circuit to ground, short circuit to power, open circuit ■ Injector(s) failure	■ If this DTC is raised with P0300-00, then the fuel delivery system and air intake system should be checked and rectified first ■ Using the manufacturer approved diagnostic system clear all stored DTCs using the 'Diagnosis Menu' tab and retest ■ Check the fuel system for blockages or restrictions, repair as required ■ Check for air leaks within the air intake system, repair as required ■ Check the catalyst/exhaust system for blockage, repair as required ■ Check and install a new spark plug(s) as required ■ Carry out cylinder compression checks as required ■ Inspect reluctor ring for damage ■ Check and install a new crankshaft position sensor as required ■ Check and install a new camshaft position sensor as required ■ Inspect connectors for signs of water ingress, and pins for damage and/or corrosion ■ Refer to the electrical circuit diagrams and check injector(s) circuit for short circuit to ground, short circuit to power, open circuit	

			■ Identify the misfiring cylinder. Check and install a new injector as required
P0303-00	Cylinder 3 Misfire Detected - No sub type information	**NOTE:** **Monitor description.** Misfire detection ■ Poor fuel supply ■ Poor fuel quality ■ Fuel air ratio excessively too lean or too rich ■ Catalyst/exhaust system blockage ■ Spark plug(s) fouled or failed ■ Low Cylinder compression ■ Reluctor ring ■ Crankshaft position sensor failure ■ Camshaft position sensor failure ■ Injector or ignition coil connector is disconnected, connector pin is backed out, connector pin corrosion ■ Connector is disconnected, connector pin is backed out, connector pin corrosion ■ Injector circuit short circuit to ground, short circuit to power, open circuit ■ Injector(s) failure	■ Check engine control module for related fuelling, ignition coil, injector or individual cylinder misfire DTCs and refer to this DTC index. Rectify these first ■ If this DTC is raised with P0300-00, then the fuel delivery system and air intake system should be checked and rectified first ■ Using the manufacturer approved diagnostic system clear all stored DTCs using the 'Diagnosis Menu' tab and retest ■ Check the fuel system for blockages or restrictions, repair as required ■ Check for air leaks within the air intake system, repair as required ■ Check the catalyst/exhaust system for blockage, repair as required ■ Check and install a new spark plug(s) as required ■ Carry out cylinder compression checks as required ■ Inspect reluctor ring for damage ■ Check and install a new crankshaft position sensor as required

			■ Check and install a new camshaft position sensor as required ■ Inspect connectors for signs of water ingress, and pins for damage and/or corrosion ■ Refer to the electrical circuit diagrams and check injector(s) circuit for short circuit to ground, short circuit to power, open circuit ■ Identify the misfiring cylinder. Check and install a new injector as required
P0304-00	Cylinder 4 Misfire Detected - No sub type information	△ **NOTE:** **Monitor description.** Misfire detection ■ Poor fuel supply ■ Poor fuel quality ■ Fuel air ratio excessively too lean or too rich ■ Catalyst/exhaust system blockage ■ Spark plug(s) fouled or failed ■ Low Cylinder compression ■ Reluctor ring ■ Crankshaft position sensor failure ■ Camshaft position sensor failure ■ Injector or ignition coil connector is disconnected, connector pin is backed out, connector pin corrosion	■ Check engine control module for related fuelling, ignition coil, injector or individual cylinder misfire DTCs and refer to this DTC index. Rectify these first ■ If this DTC is raised with P0300-00, then the fuel delivery system and air intake system should be checked and rectified first ■ Using the manufacturer approved diagnostic system clear all stored DTCs using the 'Diagnosis Menu' tab and retest ■ Check the fuel system for blockages or restrictions, repair as required ■ Check for air leaks within the air intake system, repair as required ■ Check the catalyst/exhaust system for blockage, repair as required

			■ Connector is disconnected, connector pin is backed out, connector pin corrosion ■ Injector circuit short circuit to ground, short circuit to power, open circuit ■ Injector(s) failure	■ Check and install a new spark plug(s) as required ■ Carry out cylinder compression checks as required ■ Inspect reluctor ring for damage ■ Check and install a new crankshaft position sensor as required ■ Check and install a new camshaft position sensor as required ■ Inspect connectors for signs of water ingress, and pins for damage and/or corrosion ■ Refer to the electrical circuit diagrams and check injector(s) circuit for short circuit to ground, short circuit to power, open circuit ■ Identify the misfiring cylinder. Check and install a new injector as required
P0305-00	Cylinder 5 Misfire Detected - No sub type information	**NOTE:** **Monitor description.** Misfire detection ■ Poor fuel supply ■ Poor fuel quality ■ Fuel air ratio excessively too lean or too rich ■ Catalyst/exhaust system blockage	■ Check engine control module for related fuelling, ignition coil, injector or individual cylinder misfire DTCs and refer to this DTC index. Rectify these first ■ If this DTC is raised with P0300-00, then the fuel delivery system and air intake system should be checked and rectified first	

		■ Spark plug(s) fouled or failed ■ Low Cylinder compression ■ Reluctor ring ■ Crankshaft position sensor failure ■ Camshaft position sensor failure ■ Injector or ignition coil connector is disconnected, connector pin is backed out, connector pin corrosion ■ Connector is disconnected, connector pin is backed out, connector pin corrosion ■ Injector circuit short circuit to ground, short circuit to power, open circuit ■ Injector(s) failure	■ Using the manufacturer approved diagnostic system clear all stored DTCs using the 'Diagnosis Menu' tab and retest ■ Check the fuel system for blockages or restrictions, repair as required ■ Check for air leaks within the air intake system, repair as required ■ Check the catalyst/exhaust system for blockage, repair as required ■ Check and install a new spark plug(s) as required ■ Carry out cylinder compression checks as required ■ Inspect reluctor ring for damage ■ Check and install a new crankshaft position sensor as required ■ Check and install a new camshaft position sensor as required ■ Inspect connectors for signs of water ingress, and pins for damage and/or corrosion ■ Refer to the electrical circuit diagrams and check injector(s) circuit for short circuit to ground, short circuit to power, open circuit ■ Identify the misfiring cylinder. Check and install a new injector as required
P0306-	Cylinder 6		

	00	Misfire Detected - No sub type information	**NOTE:** **Monitor description.** Misfire detection ■ Poor fuel supply ■ Poor fuel quality ■ Fuel air ratio excessively too lean or too rich ■ Catalyst/exhaust system blockage ■ Spark plug(s) fouled or failed ■ Low Cylinder compression ■ Reluctor ring ■ Crankshaft position sensor failure ■ Camshaft position sensor failure ■ Injector or ignition coil connector is disconnected, connector pin is backed out, connector pin corrosion ■ Connector is disconnected, connector pin is backed out, connector pin corrosion ■ Injector circuit short circuit to ground, short circuit to power, open circuit ■ Injector(s) failure	■ Check engine control module for related fuelling, ignition coil, injector or individual cylinder misfire DTCs and refer to this DTC index. Rectify these first ■ If this DTC is raised with P0300-00, then the fuel delivery system and air intake system should be checked and rectified first ■ Using the manufacturer approved diagnostic system clear all stored DTCs using the 'Diagnosis Menu' tab and retest ■ Check the fuel system for blockages or restrictions, repair as required ■ Check for air leaks within the air intake system, repair as required ■ Check the catalyst/exhaust system for blockage, repair as required ■ Check and install a new spark plug(s) as required ■ Carry out cylinder compression checks as required ■ Inspect reluctor ring for damage ■ Check and install a new crankshaft position sensor as required ■ Check and install a new camshaft position sensor as required ■ Inspect connectors for signs of water ingress, and pins for damage and/or corrosion

			■ Refer to the electrical circuit diagrams and check injector(s) circuit for short circuit to ground, short circuit to power, open circuit ■ Identify the misfiring cylinder. Check and install a new injector as required
P0307-00	Cylinder 7 Misfire Detected - No sub type information	**NOTE:** **Monitor description.** Misfire detection ■ Poor fuel supply ■ Poor fuel quality ■ Fuel air ratio excessively too lean or too rich ■ Catalyst/exhaust system blockage ■ Spark plug(s) fouled or failed ■ Low Cylinder compression ■ Reluctor ring ■ Crankshaft position sensor failure ■ Camshaft position sensor failure ■ Injector or ignition coil connector is disconnected, connector pin is backed out, connector pin corrosion ■ Connector is disconnected, connector pin is backed out, connector pin corrosion ■ Injector circuit short circuit to ground, short circuit to power, open circuit	■ Check engine control module for related fuelling, ignition coil, injector or individual cylinder misfire DTCs and refer to this DTC index. Rectify these first ■ If this DTC is raised with P0300-00, then the fuel delivery system and air intake system should be checked and rectified first ■ Using the manufacturer approved diagnostic system clear all stored DTCs using the 'Diagnosis Menu' tab and retest ■ Check the fuel system for blockages or restrictions, repair as required ■ Check for air leaks within the air intake system, repair as required ■ Check the catalyst/exhaust system for blockage, repair as required ■ Check and install a new spark plug(s) as required ■ Carry out cylinder compression checks as required

		■ Injector(s) failure	■ Inspect reluctor ring for damage ■ Check and install a new crankshaft position sensor as required ■ Check and install a new camshaft position sensor as required ■ Inspect connectors for signs of water ingress, and pins for damage and/or corrosion ■ Refer to the electrical circuit diagrams and check injector(s) circuit for short circuit to ground, short circuit to power, open circuit ■ Identify the misfiring cylinder. Check and install a new injector as required
P0308-00	Cylinder 8 Misfire Detected - No sub type information	△ **NOTE:** **Monitor description.** Misfire detection ■ Poor fuel supply ■ Poor fuel quality ■ Fuel air ratio excessively too lean or too rich ■ Catalyst/exhaust system blockage ■ Spark plug(s) fouled or failed ■ Low Cylinder compression ■ Reluctor ring ■ Crankshaft position sensor failure	■ Check engine control module for related fuelling, ignition coil, injector or individual cylinder misfire DTCs and refer to this DTC index. Rectify these first ■ If this DTC is raised with P0300-00, then the fuel delivery system and air intake system should be checked and rectified first ■ Using the manufacturer approved diagnostic system clear all stored DTCs using the 'Diagnosis Menu' tab and retest ■ Check the fuel system for blockages or restrictions, repair as required

			■ Camshaft position sensor failure ■ Injector or ignition coil connector is disconnected, connector pin is backed out, connector pin corrosion ■ Connector is disconnected, connector pin is backed out, connector pin corrosion ■ Injector circuit short circuit to ground, short circuit to power, open circuit ■ Injector(s) failure	■ Check for air leaks within the air intake system, repair as required ■ Check the catalyst/exhaust system for blockage, repair as required ■ Check and install a new spark plug(s) as required ■ Carry out cylinder compression checks as required ■ Inspect reluctor ring for damage ■ Check and install a new crankshaft position sensor as required ■ Check and install a new camshaft position sensor as required ■ Inspect connectors for signs of water ingress, and pins for damage and/or corrosion ■ Refer to the electrical circuit diagrams and check injector(s) circuit for short circuit to ground, short circuit to power, open circuit ■ Identify the misfiring cylinder. Check and install a new injector as required
P0313-00	Misfire Detected With Low Fuel - No sub type information		■ Poor fuel quality ■ Catalyst/exhaust system blockage ■ Spark plug(s) fouled or failed ■ Coil(s) failure ■ Injector(s) circuit short circuit to ground, short circuit to power, open circuit	■ Using the manufacturer approved diagnostic system, check engine control module, for related DTCs and refer to the relevant DTC index ■ Check the fuel system for blockages, repair as required

			■ Injector(s) failure ■ Fuel system excessively too lean or too rich ■ Camshaft position sensor failure	■ Check the catalyst/exhaust system for blockage, repair as required ■ Check and install a new spark plug(s) as required ■ Check and install a new coil(s) as required ■ Refer to the electrical circuit diagrams and check injector(s) circuit for short circuit to ground, short circuit to power, open circuit ■ Check and install a new injector(s) as required ■ Check for air leaks within the intake system ■ Check and install a new camshaft position sensor as required ■ Refer to the warranty policy and procedures manual, or determine if any prior approval programme is in operation, prior to the installation of a new module/component
P0316-00	Misfire Detected On Startup (First 1000 Revolutions) - No sub type information		■ Poor fuel quality ■ Catalyst/exhaust system blockage ■ Spark plug(s) fouled or failed ■ Coil(s) failure ■ Injector(s) circuit short circuit to ground, short circuit to power, open circuit ■ Injector(s) failure	■ Using the manufacturer approved diagnostic system, check engine control module, for related DTCs and refer to the relevant DTC index ■ Check the fuel system for blockages, repair as required ■ Check the catalyst/exhaust system for blockage, repair as required

		■ Fuel system excessively too lean or too rich ■ Camshaft position sensor failure	■ Check and install a new spark plug(s) as required ■ Check and install a new coil(s) as required ■ Refer to the electrical circuit diagrams and check injector(s) circuit for short circuit to ground, short circuit to power, open circuit ■ Check and install a new injector(s) as required ■ Check for air leaks within the intake system ■ Check and install a new camshaft position sensor as required ■ Refer to the warranty policy and procedures manual, or determine if any prior approval programme is in operation, prior to the installation of a new module/component
P0327-00	Knock Sensor 1 Circuit Low (Bank1) - No sub type information	**NOTE:** - Circuit KNOCK_SENSOR_1A_POS - ■ Poor sensor contact with the cylinder block ■ Knock sensor bank 1 front circuit short circuit to ground, open circuit ■ Knock sensor bank 1 front failure	■ Ensure a good electrical contact with the cylinder block ■ Refer to the electrical circuit diagrams and check knock sensor bank 1 front circuit for short circuit to ground, open circuit ■ Check and install a new knock sensor bank 1 front as required. Refer to the warranty policy and procedures manual, or determine if any prior approval programme is in operation,

			prior to the installation of a new module /component
P0328-00	Knock Sensor 1 Circuit High (Bank 1) - No sub type information	**NOTE:** - Circuit KNOCK_SENSOR_1A_POS - ■ Poor sensor contact with the cylinder block ■ Knock sensor bank 1 front circuit high resistance, short circuit to power ■ Knock sensor bank 1 front failure	■ Ensure a good electrical contact with the cylinder block ■ Refer to the electrical circuit diagrams and check knock sensor bank 1 front circuit for short circuit to power, high resistance ■ Check and install a new knock sensor bank 1 front as required. Refer to the warranty policy and procedures manual, or determine if any prior approval programme is in operation, prior to the installation of a new module /component
P032C-00	Knock Sensor 3 Circuit Low (Bank1) - No sub type information	**NOTE:** - Circuit KNOCK_SENSOR_2A_POS - ■ Poor sensor contact with the cylinder block ■ Knock sensor bank 2 front circuit short circuit to ground ■ Knock sensor bank 2 front failure	■ Ensure a good electrical contact with the cylinder block ■ Refer to the electrical circuit diagrams and check knock sensor bank 2 front circuit for short circuit to ground ■ Check and install a new knock sensor bank 2 front as required. Refer to the warranty policy and procedures manual, or determine if any prior approval programme is in operation, prior to the installation of a new module /component
P032D-00	Knock Sensor 3 Circuit High	**NOTE:**	■ Ensure a good electrical contact with the cylinder block

	(Bank1) - No sub type information	- Circuit KNOCK_SENSOR_2A_POS - ■ Poor sensor contact with the cylinder block ■ Knock sensor bank 2 front circuit high resistance, short circuit to power ■ Knock sensor bank 2 front failure	■ Refer to the electrical circuit diagrams and check knock sensor bank 2 front circuit for short circuit to power, high resistance ■ Check and install a new knock sensor bank 2 front as required. Refer to the warranty policy and procedures manual, or determine if any prior approval programme is in operation, prior to the installation of a new module /component
P0332-00	Knock Sensor 2 Circuit Low (Bank2) - No sub type information	**NOTE:** - Circuit KNOCK_SENSOR_1B_POS - ■ Poor sensor contact with the cylinder block ■ Knock sensor bank 1 rear circuit short circuit to ground, open circuit ■ Knock sensor bank 1 rear failure	■ Ensure a good electrical contact with the cylinder block ■ Refer to the electrical circuit diagrams and check knock sensor bank 1 rear circuit for short circuit to ground, open circuit ■ Check and install a new knock sensor bank 1 rear as required. Refer to the warranty policy and procedures manual, or determine if any prior approval programme is in operation, prior to the installation of a new module /component
P0333-00	Knock Sensor 2 Circuit High (Bank 2) - No sub type information	**NOTE:** - Circuit KNOCK_SENSOR_1B_POS -	■ Ensure a good electrical contact with the cylinder block ■ Refer to the electrical circuit diagrams and check knock sensor bank 1 rear circuit for short circuit to power

		Poor sensor contact with the cylinder block ■ Knock sensor bank 1 rear circuit short circuit to power ■ Knock sensor bank 1 rear failure	■ Check and install a new knock sensor bank 1 rear as required. Refer to the warranty policy and procedures manual, or determine if any prior approval programme is in operation, prior to the installation of a new module /component
P0335-02	Crankshaft Position Sensor A Circuit - General signal failure	**NOTE:** - Circuit CRANK_SENSOR - ■ Crankshaft position sensor circuit short circuit to ground, short circuit to power, high resistance, disconnected ■ Crankshaft position sensor failure	■ Refer to the electrical circuit diagrams and check crankshaft position sensor circuit for short circuit to ground, short circuit to power, high resistance, disconnected ■ Check and install new crankshaft position as required. Refer to the warranty policy and procedures manual, or determine if any prior approval programme is in operation, prior to the installation of a new module /component
P0335-31	Crankshaft Position Sensor A Circuit - No signal	**NOTE:** - Circuit CRANK_SENSOR - ■ Crankshaft position sensor circuit - short circuit to ground, short circuit to power, high resistance, disconnected ■ Crankshaft position sensor failure	■ Refer to the electrical circuit diagrams and check crankshaft position sensor circuit for short circuit to ground, short circuit to power, high resistance, disconnected ■ Check and install new crankshaft position as required. Refer to the warranty policy and procedures manual, or determine if any prior approval programme is in operation, prior to the installation of a new module /component

P0336-00	Crankshaft Position Sensor A Circuit Range /Performance - No sub type information	**NOTE:** - Circuit CRANK_SENSOR - ■ Crankshaft position sensor circuit short circuit to ground, short circuit to power, high resistance, disconnected ■ Crankshaft position sensor gap incorrect, foreign matter on sensor face, damaged teeth on rotor ■ Crankshaft position sensor failure	■ Refer to the electrical circuit diagrams and check crankshaft position sensor circuit for short circuit to ground, short circuit to power, high resistance, disconnected ■ Check crankshaft position sensor for damage and check air gap (check at 90B0 intervals, should be no greater than 4.5mm) ■ Check and install new crankshaft position as required. Refer to the warranty policy and procedures manual, or determine if any prior approval programme is in operation, prior to the installation of a new module /component
P033C-00	Knock Sensor 4 Circuit Low (Bank 2) - No sub type information	**NOTE:** - Circuit KNOCK_SENSOR_2B_POS - ■ Poor sensor contact with the cylinder block ■ Knock sensor bank 2 rear circuit short circuit to ground ■ Knock sensor bank 2 rear failure	■ Ensure a good electrical contact with the cylinder block ■ Refer to the electrical circuit diagrams and check knock sensor bank 2 rear circuit for short circuit to ground ■ Check and install a new knock sensor bank 2 rear as required. Refer to the warranty policy and procedures manual, or determine if any prior approval programme is in operation, prior to the installation of a new module /component
P033D-00	Knock Sensor 4 Circuit High	**NOTE:**	■ Ensure a good electrical contact with the cylinder block

	(Bank 2) - No sub type information	- Circuit KNOCK_SENSOR_2B_POS - ■ Poor sensor contact with the cylinder block ■ Knock sensor bank 2 rear circuit high resistance, short circuit to power ■ Knock sensor bank 2 rear failure	■ Refer to the electrical circuit diagrams and check knock sensor bank 2 rear circuit for short circuit to power, high resistance ■ Check and install a new knock sensor bank 2 rear as required. Refer to the warranty policy and procedures manual, or determine if any prior approval programme is in operation, prior to the installation of a new module /component
P0340-02	Camshaft Position Sensor A Circuit (Bank 1 or single sensor) - General signal failure	NOTE: - Circuit CAM_IN_SENSOR_A - ■ Camshaft position sensor bank 1 inlet sensor circuit short circuit to ground, short circuit to power, high resistance, disconnected ■ Camshaft position sensor bank 1 inlet sensor gap incorrect, foreign matter on sensor face, damaged rotor ■ Camshaft position sensor bank 1 inlet sensor failure	■ Refer to the electrical circuit diagrams and check camshaft position sensor bank 1 inlet sensor circuit for short circuit to ground, short circuit to power, high resistance, disconnected ■ Check camshaft position sensor bank 1 inlet sensor for correct installation and damage ■ Check and install a new camshaft position sensor bank 1 inlet as required. Refer to the warranty policy and procedures manual, or determine if any prior approval programme is in operation, prior to the installation of a new module/component
P0340-31	Camshaft Position Sensor A Circuit (Bank 1 or single	NOTE: - Circuit CAM_IN_SENSOR_A -	■ Refer to the electrical circuit diagrams and check camshaft position sensor

	sensor) - No signal	■ Camshaft position sensor bank 1 inlet sensor circuit short circuit to ground, short circuit to power, high resistance, disconnected ■ Camshaft position sensor bank 1 inlet sensor gap incorrect, foreign matter on sensor face, damaged rotor ■ Camshaft position sensor bank 1 inlet sensor failure	bank 1 inlet sensor circuit for short circuit to ground, short circuit to power, high resistance, disconnected ■ Check camshaft position sensor bank 1 inlet sensor for correct installation and damage ■ Check and install a new camshaft position sensor bank 1 inlet as required. Refer to the warranty policy and procedures manual, or determine if any prior approval programme is in operation, prior to the installation of a new module/component
P0341-00	Camshaft Position Sensor A Circuit Range /Performance (Bank 1 or single sensor) - No sub type information	**NOTE:** - Circuit CAM_IN_SENSOR_A - ■ Camshaft position sensor bank 1 inlet sensor circuit short circuit to ground, short circuit to power, high resistance, disconnected ■ Camshaft position sensor bank 1 inlet sensor gap incorrect, foreign matter on sensor face, damaged rotor ■ Camshaft position sensor bank 1 inlet sensor failure	■ Refer to the electrical circuit diagrams and check camshaft position sensor bank 1 inlet sensor circuit for short circuit to ground, short circuit to power, high resistance, disconnected ■ Check camshaft position sensor bank 1 inlet sensor for correct installation and damage ■ Check and install a new camshaft position sensor bank 1 inlet as required. Refer to the warranty policy and procedures manual, or determine if any prior approval programme is in operation, prior to the installation of a new module/component
P0345-02	Camshaft Position Sensor	**NOTE:**	■ Refer to the electrical circuit diagrams and check camshaft position sensor

	A Circuit (Bank 2) - General signal failure	- Circuit CAM_IN_SENSOR_B - ■ Camshaft position sensor bank 2 inlet sensor circuit short circuit to ground, short circuit to power, high resistance, disconnected ■ Camshaft position sensor bank 2 inlet sensor gap incorrect, foreign matter on sensor face, damaged rotor ■ Camshaft position sensor bank 2 inlet sensor failure	bank 2 inlet sensor circuit for short circuit to ground, short circuit to power, high resistance, disconnected ■ Check camshaft position sensor bank 2 inlet sensor for correct installation and damage ■ Check and install a new camshaft position sensor bank 2 inlet as required. Refer to the warranty policy and procedures manual, or determine if any prior approval programme is in operation, prior to the installation of a new module/component
P0345-31	Camshaft Position Sensor A Circuit (Bank 2) - No signal	NOTE: - Circuit CAM_IN_SENSOR_B - ■ Camshaft position sensor bank 2 inlet sensor circuit - short circuit to ground, short circuit to power, high resistance, disconnected ■ Camshaft position sensor bank 2 inlet sensor gap incorrect, foreign matter on sensor face, damaged rotor ■ Camshaft position sensor bank 2 inlet sensor failure	■ Refer to the electrical circuit diagrams and check camshaft position sensor bank 2 inlet sensor circuit for short circuit to ground, short circuit to power, high resistance, disconnected ■ Check camshaft position sensor bank 2 inlet sensor for correct installation and damage ■ Check and install a new camshaft position sensor bank 2 inlet as required. Refer to the warranty policy and procedures manual, or determine if any prior approval programme is in operation, prior to the installation of a new module/component
P0346-00	Camshaft Position Sensor	NOTE:	■ Refer to the electrical circuit diagrams and check camshaft position sensor

	A Circuit Range /Performance (Bank 2) - No sub type information	- Circuit CAM_IN_SENSOR_B - ■ Camshaft position sensor bank 2 inlet sensor circuit - short circuit to ground, short circuit to power, high resistance, disconnected ■ Camshaft position sensor bank 2 inlet sensor gap incorrect, foreign matter on sensor face, target rotor run-out ■ Camshaft position sensor bank 2 inlet sensor failure	bank 2 inlet sensor circuit for short circuit to ground, short circuit to power, high resistance, disconnected ■ Check camshaft position sensor bank 2 inlet sensor for correct installation and damage ■ Check target rotor for run out, repair as required ■ Check and install a new camshaft position sensor bank 2 inlet as required. Refer to the warranty policy and procedures manual, or determine if any prior approval programme is in operation, prior to the installation of a new module/component
P0351-13	Ignition Coil A Primary /Secondary Circuit - Circuit open	**NOTE:** - Circuit IGNITION_1A - ■ Ignition coil 1 open circuit ■ Ignition coil 1 disconnected ■ Ignition coil high resistance	■ Refer to the electrical circuit diagrams and check ignition coil 1 circuit for open circuit, disconnected ignition coil, high resistance
P0352-13	Ignition Coil B Primary /Secondary Circuit - Circuit open	**NOTE:** - Circuit IGNITION_1B -	■ Refer to the electrical circuit diagrams and check ignition coil 2 circuit for open circuit, disconnected ignition coil, high resistance

		■ Ignition coil 2 open circuit ■ Ignition coil 2 disconnected ■ Ignition coil high resistance	
P0353-13	Ignition Coil C Primary /Secondary Circuit - Circuit open	**NOTE:** - Circuit IGNITION_2A - ■ Ignition coil 3 open circuit ■ Ignition coil 3 disconnected ■ Ignition coil high resistance	■ Refer to the electrical circuit diagrams and check ignition coil 3 circuit for open circuit, disconnected ignition coil, high resistance
P0354-13	Ignition Coil D Primary /Secondary Circuit - Circuit open	**NOTE:** - Circuit IGNITION_2B - ■ Ignition coil 4 open circuit ■ Ignition coil 4 disconnected ■ Ignition coil high resistance	■ Refer to the electrical circuit diagrams and check ignition coil 4 circuit for open circuit, disconnected ignition coil, high resistance
P0355-13	Ignition Coil E Primary /Secondary Circuit - Circuit open	**NOTE:** - Circuit IGNITION_3A -	■ Refer to the electrical circuit diagrams and check ignition coil 5 circuit for open circuit, disconnected ignition coil, high resistance

		■ Ignition coil 5 open circuit ■ Ignition coil 5 disconnected ■ Ignition coil high resistance	
P0356-13	Ignition Coil F Primary /Secondary Circuit - Circuit open	**NOTE:** - Circuit IGNITION_3B - ■ Ignition coil 6 open circuit ■ Ignition coil 6 disconnected ■ Ignition coil high resistance	■ Refer to the electrical circuit diagrams and check ignition coil 6 circuit for open circuit, disconnected ignition coil, high resistance
P0357-13	Ignition Coil G Primary /Secondary Circuit - Circuit open	**NOTE:** - Circuit IGNITION_4A - ■ Ignition coil 7 open circuit ■ Ignition coil 7 disconnected ■ Ignition coil high resistance	■ Refer to the electrical circuit diagrams and check ignition coil 7 circuit for open circuit, disconnected ignition coil, high resistance
P0358-13	Ignition Coil H Primary /Secondary Circuit - Circuit open	**NOTE:** - Circuit IGNITION_4B -	■ Refer to the electrical circuit diagrams and check ignition coil 8 circuit for open circuit, disconnected ignition coil, high resistance

		■ Ignition coil 8 open circuit ■ Ignition coil 8 disconnected ■ Ignition coil high resistance	
P0365-02	Camshaft Position Sensor B Circuit (Bank 1) - General signal failure	**NOTE:** - Circuit CAM_EX_SENSOR_A - ■ Camshaft position sensor bank 1 outlet sensor circuit short circuit to ground, short circuit to power, high resistance, disconnected ■ Camshaft position sensor bank 1 outlet sensor gap incorrect, foreign matter on sensor face, damaged rotor ■ Camshaft position sensor bank 1 outlet sensor failure	■ Refer to the electrical circuit diagrams and check camshaft position sensor bank 1 outlet sensor circuit for short circuit to ground, short circuit to power, high resistance, disconnected ■ Check camshaft position sensor bank 1 outlet sensor for correct installation and damage ■ Check and install a new camshaft position sensor bank 1 outlet as required. Refer to the warranty policy and procedures manual, or determine if any prior approval programme is in operation, prior to the installation of a new module/component
P0366-00	Camshaft Position Sensor B Circuit Range /Performance (Bank 1) - No sub type information	**NOTE:** - Circuit CAM_EX_SENSOR_A - ■ Camshaft position sensor bank 1 outlet sensor circuit short circuit to ground, short circuit to power, high resistance, disconnected	■ Refer to the electrical circuit diagrams and check camshaft position sensor bank 1 outlet sensor circuit for short circuit to ground, short circuit to power, high resistance, disconnected ■ Check camshaft position sensor bank 1 outlet sensor for correct installation and damage ■ Check target run-out, repair as required

		■ Camshaft position sensor bank 1 outlet sensor gap incorrect, foreign matter on sensor face, target rotor run-out ■ Camshaft position sensor bank 1 outlet sensor failure	■ Check and install a new camshaft position sensor bank 1 outlet as required. Refer to the warranty policy and procedures manual, or determine if any prior approval programme is in operation, prior to the installation of a new module/component
P0390-02	Camshaft Position Sensor B Circuit (Bank 2) - General signal failure	△ NOTE: - Circuit CAM_EX_SENSOR_B - ■ Camshaft position sensor bank 2 outlet sensor circuit short circuit to ground, short circuit to power, high resistance, disconnected ■ Camshaft position sensor bank 2 outlet sensor gap incorrect, foreign matter on sensor face, damaged rotor ■ Camshaft position sensor bank 2 outlet sensor failure	■ Refer to the electrical circuit diagrams and check camshaft position sensor bank 2 outlet sensor circuit for short circuit to ground, short circuit to power, high resistance, disconnected ■ Check camshaft position sensor bank 2 outlet sensor for correct installation and damage ■ Check and install a new camshaft position sensor bank 2 outlet as required. Refer to the warranty policy and procedures manual, or determine if any prior approval programme is in operation, prior to the installation of a new module/component
P0391-00	Camshaft Position Sensor B Circuit Range /Performance (Bank 2) - No sub type information	△ NOTE: - Circuit CAM_EX_SENSOR_B - ■ Camshaft position sensor bank 2 outlet sensor circuit short circuit to ground, short circuit to power, high resistance, disconnected	■ Refer to the electrical circuit diagrams and check camshaft position sensor bank 2 outlet sensor circuit for short circuit to ground, short circuit to power, high resistance, disconnected ■ Check camshaft position sensor bank 2 outlet sensor for correct installation and damage

		■ Camshaft position sensor bank 2 outlet sensor gap incorrect, foreign matter on sensor face, damaged rotor, rotor run-out ■ Camshaft position sensor bank 2 outlet sensor failure	■ Check target rotor, repair as required ■ Check and install a new camshaft position sensor bank 2 outlet as required. Refer to the warranty policy and procedures manual, or determine if any prior approval programme is in operation, prior to the installation of a new module/component
P0420-00	Catalyst System Efficiency Below Threshold (Bank 1) - No sub type information	■ Catalytic converter failure due to overheating damage caused by misfire and/or lean combustion ■ Catalytic converter failure due to poisoning caused by excessive oil consumption and/or contaminated fuel	■ Using the manufacturer approved diagnostic system, check for misfire /lean combustion related DTCs and refer to the relevant DTC index ■ Check the oil and fuel condition/level ■ Check the catalytic converter for damage ■ Check and install a new catalytic converter bank 1 as required. Refer to the warranty policy and procedures manual, or determine if any prior approval programme is in operation, prior to the installation of a new module /component
P0430-00	Catalyst System Efficiency Below Threshold (Bank 2) - No sub type information	■ Catalytic converter failure due to overheating damage caused by misfire and/or lean combustion ■ Catalytic converter failure due to poisoning caused by excessive oil consumption and/or contaminated fuel	■ Using the manufacturer approved diagnostic system, check for misfire /lean combustion related DTCs and refer to the relevant DTC index ■ Check the oil and fuel condition/level ■ Check the catalytic converter for damage

			■ Check and install a new catalytic converter bank 2 as required. Refer to the warranty policy and procedures manual, or determine if any prior approval programme is in operation, prior to the installation of a new module /component
P0441-00	Evaporative Emission System Incorrect Purge Flow - No sub type information	**NOTE:** - Circuit PURGE_VALVE - ■ Evaporative emission system hoses, pipes or connection failure ■ Purge control valve circuit short circuit to ground, short circuit to power, open circuit, high resistance ■ Purge control valve failure	■ Check all evaporative emission system hoses, pipes and connection are serviceable, repair/replace as required ■ Refer to the electrical circuit diagrams and check purge control valve circuit for short circuit to ground, short circuit to power, open circuit ■ Check and install a new purge control valve as required. Refer to the warranty policy and procedures manual, or determine if any prior approval programme is in operation, prior to the installation of a new module /component
P0442-00	Evaporative Emission System Leak Detected (small leak)- No sub type information	■ Fuel filler cap not sealing/missing ■ Diagnostic module tank leakage connector not sealed ■ Purge valve dirty ■ Evaporative emission system leak ■ Fuel tank, filler neck leak ■ Diagnostic module tank leakage module failure	■ Check fuel tank filler cap for sealing /missing. Check and install a new fuel tank filler cap as required ■ Check evaporative emission system for leak using appropriate smoke/leak tester ■ Carry out a purge valve self test to clean the purge valve

			■ Check fuel tank and filler neck for leakage, replace as required ■ Check and install a new diagnostic module tank leakage module as required. Refer to the warranty policy and procedures manual, or determine if any prior approval programme is in operation, prior to the installation of a new module/component
P0444-13	Evaporative Emission System Purge Control Valve Circuit Open - Circuit open	**NOTE:** - Circuit PURGE_VALVE - ■ Purge control valve open circuit, high resistance, disconnected	■ Refer to the electrical circuit diagrams and check purge control valve circuit for open circuit, disconnected purge valve, high resistance
P0447-00	Evaporative Emission System Vent Control Circuit Open - No sub type information	**NOTES:** ■ - Circuit COV - ■ LR - Circuit CHANGE OVER VALVE - ■ Diagnostic module tank leakage module circuit open circuit ■ Diagnostic module tank leakage module circuit fuse blown / not secure in holder ■ Diagnostic module tank leakage module failure	■ Refer to the electrical circuit diagrams and check diagnostic module tank leakage module circuit for open circuit ■ Check diagnostic module tank leakage module fuse and replace as required ■ Check and install a new diagnostic module tank leakage module as required. Refer to the warranty policy and procedures manual, or determine if any prior approval programme is in operation, prior to the installation of a new module/component

P0448-00	Evaporative Emission System Vent Control Circuit Shorted - No sub type information	**NOTES:** - Circuit COV - LR - Circuit CHANGE OVER VALVE - ■ Diagnostic module tank leakage module circuit, short circuit to ground, short circuit to power, open circuit ■ Diagnostic module tank leakage module failure	■ Refer to the electrical circuit diagrams and check diagnostic module tank leakage module circuit for short circuit to ground, short circuit to power, open circuit ■ Check and install a new diagnostic module tank leakage module as required. Refer to the warranty policy and procedures manual, or determine if any prior approval programme is in operation, prior to the installation of a new module/component
P0456-00	Evaporative Emission System Leak Detected (very small leak) - No sub type information	■ Fuel filler cap not sealing/missing ■ Diagnostic module tank leakage connector not sealed ■ Purge valve dirty ■ Evaporative emission system leak ■ Fuel tank, filler neck leak ■ Diagnostic module tank leakage module failure	■ Check fuel tank filler cap for sealing /missing. Check and install a new fuel tank filler cap as required ■ Check evaporative emission system for leak using appropriate smoke/leak tester ■ Carry out a purge valve self test to clean the purge valve ■ Check fuel tank and filler neck for leakage, replace as required ■ Check and install a new diagnostic module tank leakage module as required. Refer to the warranty policy and procedures manual, or determine if any prior approval programme is in operation, prior to the installation of a new module/component

P0458-11	Evaporative Emission System Purge Control Valve Circuit High - Circuit short to ground	**NOTE:** - Circuit PURGE_VALVE - ■ Evaporative emission system purge control valve circuit short circuit to ground	■ Refer to the electrical circuit diagrams and check evaporative emission system purge control valve circuit for short circuit to ground
P0459-12	Evaporative Emission System Purge Control Valve Circuit High - Circuit short to battery	**NOTE:** - Circuit PURGE_VALVE - ■ Evaporative emission system purge control valve circuit short circuit to power	■ Refer to the electrical circuit diagrams and check evaporative emission system purge control valve circuit for short circuit to power
P0461-29	Fuel Level Sensor A Circuit Range /Performance - Signal invalid	■ Fuel level sensor circuit open circuit, short circuit to ground, short circuit to power ■ Fuel level sensor stuck ■ Fuel level sensor failure	■ Refer to the electrical circuit diagrams and check fuel level sensor circuit for short circuit to ground, short circuit to power, open circuit ■ Check for stuck level sensor ■ Check and install a new fuel level sensor as required. Refer to the warranty policy and procedures manual, or determine if any prior approval programme is in operation, prior to the installation of a new module /component
P0461-	Fuel Level		

2F	Sensor A Circuit Range /Performance - Signal erratic	■ Fuel level sensor circuit short circuit to ground, short circuit to power, open circuit ■ Fuel level sensor track damaged ■ Fuel level sensor failure	■ Refer to the electrical circuit diagrams and check fuel level sensor circuit for short circuit to ground, short circuit to power, open circuit ■ Check level sensor track for damage ■ Check and install a new fuel level sensor as required. Refer to the warranty policy and procedures manual, or determine if any prior approval programme is in operation, prior to the installation of a new module /component
P0480-13	Fan 1 Control Circuit - Circuit open	**NOTE:** - Circuit VISCOUS FAN CTRL - ■ Viscous fan control circuit, open circuit	■ Refer to the electrical circuit diagrams and check viscous fan control circuit for open circuit
P0483-00	Fan Performance - No sub type information	**NOTE:** - Circuit VISCOUS FAN CTRL - ■ Viscous fan control circuit, short circuit to ground, short circuit to power, open circuit ■ Viscous fan unit hydraulic fluid leakage	■ Refer to the electrical circuit diagrams and check viscous fan control circuit for short circuit to ground, short circuit to power, open circuit ■ Check and install a new viscous fan unit as required. Refer to the warranty policy and procedures manual, or determine if any prior approval programme is in operation, prior to the installation of a new module/component

P0493-00	Fan Overspeed (clutch locked) - No sub type information	**NOTE:** - Circuit VISCOUS FAN CTRL - ■ Viscous fan control circuit, short circuit to ground, short circuit to power, open circuit	■ Refer to the electrical circuit diagrams and check viscous fan control circuit for short circuit to ground, short circuit to power, open circuit
P0500-81	Vehicle Speed Sensor A - Invalid serial data received	■ Wheel speed sensor fault	■ Check anti-lock braking system module for related DTCs and refer to relevant DTC index
P0500-82	Vehicle Speed Sensor A - Alive / sequence counter incorrect / not updated	■ Anti-lock braking system module not on bus	■ Check anti-lock braking system module and engine control module for related DTCs and refer to relevant DTC index ■ Refer to the electrical circuit diagrams and check anti-lock braking system module circuit for short circuit to ground, short circuit to power, open circuit
P0500-83	Vehicle Speed Sensor A - Value of signal protection calculation incorrect	■ Incorrect level of anti-lock braking system module software ■ Incorrect level of engine control module software	■ Clear DTC and re-test ■ Using the manufacturer approved diagnostic system check and install latest relevant level of software to the anti-lock braking system module ■ Using the manufacturer approved diagnostic system check and install latest relevant level of software to the engine control module

P0500-85	Vehicle Speed Sensor A - Signal above allowable range	■ Anti-lock braking system module has reported a speed above 300 km/h	■ Check anti-lock braking system module for related DTCs and refer to relevant DTC index
P0501-62	Vehicle Speed Sensor A Range /Performance - Signal compare failure	■ Vehicle speed from the anti-lock braking system module does not match the calculated vehicle speed from the engine control module	■ Check engine control module for related vehicle speed DTCs and refer to relevant DTC index ■ Check anti-lock braking system module and transmission control module for related DTCs and refer to relevant DTC index ■ Check the vehicle tire sizes are correct
P0504-00	Brake Switch A / B Correlation - No sub type information	■ No brake pressure signal available from anti-lock braking module ■ Brake switch 1 and Brake switch 2 sense circuit short circuit to ground, short circuit to power, open circuit ■ Brake switch 1 failure	■ Check Anti-Lock braking module for related DTCs and refer to relevant DTC index ■ Check for brake fluid leaks ■ Refer to the electrical circuit diagrams and check anti-lock braking system module circuit for short circuit to ground, short circuit to power, open circuit ■ Refer to the electrical circuit diagrams and check brake switch circuit for short circuit to ground, short circuit to power, open circuit ■ Check and install a new brake switch 1 as required. Refer to the warranty policy and procedures manual, or

			determine if any prior approval programme is in operation, prior to the installation of a new module/component
P0504-64	Brake Switch A / B Correlation - Signal plausibility failure	**NOTE:** - Circuit BRAKE_SW - BRAKE_SW_2 - ■ Brake fluid leak ■ Brake switch incorrectly installed/adjusted ■ Brake switch 1 sense circuit short circuit to Brake switch 2 sense ■ Brake switch failure	■ Check for brake fluid leaks ■ Refer to the electrical circuit diagrams and check brake switch 1 circuit for short circuit to brake switch 2 ■ Check brake switch is correctly installed and adjusted ■ Check and install a new brake switch as required. Refer to the warranty policy and procedures manual, or determine if any prior approval programme is in operation, prior to the installation of a new module/component
P0506-00	Idle Air Control System RPM Lower Than Expected - No sub type information	■ Air intake restriction ■ Front end accessory drive overload (defective/seized component)	■ Ensure the air intake system is free from restriction ■ Check the front end accessory drive belt and components for failure, repair as required
P0506-24	Idle Air Control System RPM Lower Than Expected - Signal stuck high	■ Air intake restriction ■ Air intake system air leak between MAF/IAT sensor and throttle ■ Intake air leak between throttle and manifold ■ Engine crankcase breather leak	■ Ensure the air intake system is free from restriction ■ Check for air leak between MAF/IAT sensor and throttle ■ Check for air leak between throttle and inlet manifold ■ Check for engine breather system leak

		■ Front end accessory drive overload (defective/seized component)	■ Check the front end accessory drive belt and components for failure
P0507-00	Idle Air Control System RPM Higher Than Expected - No sub type information	■ Air intake system air leak between MAF/IAT sensor and throttle ■ Intake air leak between throttle and manifold ■ Engine crankcase breather leak	■ Check for air leak between MAF/IAT sensor and throttle ■ Check for air leak between throttle and inlet manifold ■ Check for engine breather system leak
P0507-23	Idle Air Control System RPM Higher Than Expected - Signal stuck low	■ Air intake restriction ■ Air intake system air leak between MAF/IAT sensor and throttle ■ Intake air leak between throttle and manifold ■ Engine crankcase breather leak	■ Ensure the air intake system is free from restriction ■ Check for air leak between MAF/IAT sensor and throttle ■ Check for air leak between throttle and inlet manifold ■ Check for engine breather system leak
P050B-23	Cold Start Ignition Timing Performance - Signal stuck low	■ Ignition coil(s)faulty ■ Ignition coils circuit noise ■ Engine control module failure	■ Refer to the electrical circuit diagrams and check ignition coil circuit for short circuit to ground, short circuit to power, open circuit ■ Refer to the electrical circuit diagrams and check engine control module to ignition coil circuit for short circuit to power ■ Check and install a new coil(s) as required

			■ Refer to the electrical circuit diagrams and check ignition coils circuit for corrosion, high resistance ■ Check and install a new engine control module as required. Refer to the warranty policy and procedures manual, or determine if any prior approval programme is in operation, prior to the installation of a new module /component
P050B-24	Cold Start Ignition Timing Performance - Signal stuck high	■ Ignition coil(s)faulty ■ Ignition coils circuit noise ■ Engine control module failure	■ Refer to the electrical circuit diagrams and check ignition coil circuit for short circuit to ground, short circuit to power, open circuit ■ Refer to the electrical circuit diagrams and check engine control module to ignition coil circuit for short circuit to power ■ Check and install a new coil(s) as required ■ Refer to the electrical circuit diagrams and check ignition coils circuit for corrosion, high resistance ■ Check and install a new engine control module as required. Refer to the warranty policy and procedures manual, or determine if any prior approval programme is in operation, prior to the installation of a new module /component

P050E-00	Cold Start Engine Exhaust Temperature Too Low - No sub type information	■ Incorrect coolant temperature sensor installed ■ Coolant temperature sensor circuit short circuit to ground, open circuit ■ Coolant temperature sensor failure	■ Check the correct coolant temperature sensor is installed ■ Refer to the electrical circuit diagrams and check coolant temperature sensor circuit for short circuit to ground, open circuit ■ Check and install a new coolant temperature sensor as required. Refer to the warranty policy and procedures manual, or determine if any prior approval programme is in operation, prior to the installation of a new module /component
P0512-12	Starter Request Circuit - Circuit short to battery	△ NOTE: - Circuit CRANK_REQUEST - ■ Crank request circuit between engine control module and central junction box short circuit to power	■ Refer to the electrical circuit diagrams and check crank request circuit between engine control module and central junction box for short circuit to power
P0512-14	Starter Request Circuit - Circuit short to ground or open	△ NOTE: - Circuit CRANK_REQUEST - ■ Crank request circuit between engine control module and central junction box short circuit to ground, open circuit	■ Refer to the electrical circuit diagrams and check crank request circuit between engine control module and central junction box for short circuit to ground, open circuit

P0513-00	Incorrect Immobilizer Key - No sub type information	■ Security key invalid ■ Controller area network data corruption ■ Low battery voltage	■ Check for CAN network interference /engine control module related error ■ Using the manufacturer approved diagnostic system, complete a CAN network integrity test ■ Check the vehicle charging system for faults, repair as required
P0526-16	Fan Speed Sensor Circuit - Circuit voltage below threshold	△ NOTE: - Circuit VISCOUS FAN SPEED - ■ Viscous fan circuit, short circuit to ground, short circuit to power, open circuit	■ Refer to the electrical circuit diagrams and check viscous fan circuit for short circuit to ground, short circuit to power, open circuit
P0526-17	Fan Speed Sensor Circuit - Circuit voltage above threshold	△ NOTE: - Circuit VISCOUS FAN SPEED - ■ Viscous fan circuit, short circuit to ground, short circuit to power, open circuit	■ Refer to the electrical circuit diagrams and check viscous fan circuit for short circuit to ground, short circuit to power, open circuit
P052A-00	Cold Start Intake (A) Camshaft Position Timing Over-Advanced	△ NOTE: - Circuit CAM_IN_SENSOR_A -	■ Check engine oil level and top up as required ■ Refer to the electrical circuit diagrams and check intake valve solenoid 1

	(Bank 1) - No sub type information	■ Engine oil pressure too low ■ Intake valve solenoid 1 circuit short circuit to ground, open circuit, high resistance ■ Intake valve solenoid 1 failure ■ Timing chains stretched beyond allowable limits	sensor circuit for short circuit to ground, open circuit, high resistance ■ Check and install a new intake valve solenoid 1 sensor as required ■ Check service history /mileage ■ Check and install new timing chains as required ■ Refer to the warranty policy and procedures manual, or determine if any prior approval programme is in operation, prior to the installation of a new module/component
P052B-00	Cold Start Intake (A) Camshaft Position Timing Over-Retarded (Bank 1) - No sub type information	△ NOTE: - Circuit CAM_IN_SENSOR_A - ■ Engine oil pressure too low ■ Intake valve solenoid 1 circuit short circuit to ground, open circuit, high resistance ■ Intake valve solenoid 1 failure ■ Timing chains stretched beyond allowable limits	■ Check engine oil level and top up as required ■ Refer to the electrical circuit diagrams and check intake valve solenoid 1 sensor circuit for short circuit to ground, open circuit, high resistance ■ Check and install a new intake valve solenoid 1 sensor as required ■ Check service history /mileage ■ Check and install new timing chains as required ■ Refer to the warranty policy and procedures manual, or determine if any prior approval programme is in operation, prior to the installation of a new module/component

P052C-00	Cold Start Intake (A) Camshaft Position Timing Over-Advanced (Bank 2) - No sub type information	**NOTE:** - Circuit CAM_IN_SENSOR_B - ■ Engine oil pressure too low ■ Intake valve solenoid 2 circuit short circuit to ground, open circuit, high resistance ■ Intake valve solenoid 2 failure ■ Timing chains stretched beyond allowable limits	■ Check engine oil level and top up as required ■ Refer to the electrical circuit diagrams and check intake valve solenoid 2 sensor circuit for short circuit to ground, open circuit, high resistance ■ Check and install a new intake valve solenoid 2 sensor as required ■ Check service history /mileage ■ Check and install new timing chains as required ■ Refer to the warranty policy and procedures manual, or determine if any prior approval programme is in operation, prior to the installation of a new module/component
P052D-00	Cold Start Intake (A) Camshaft Position Timing Over-Retarded (Bank 2) - No sub type information	**NOTE:** - Circuit CAM_IN_SENSOR_B - ■ Engine oil pressure too low ■ Intake valve solenoid 2 circuit short circuit to ground, open circuit, high resistance ■ Intake valve solenoid 2 failure ■ Timing chains stretched beyond allowable limits	■ Check engine oil level and top up as required ■ Refer to the electrical circuit diagrams and check intake valve solenoid 2 sensor circuit for short circuit to ground, open circuit, high resistance ■ Check and install a new intake valve solenoid 2 sensor as required ■ Check service history /mileage ■ Check and install new timing chains as required ■ Refer to the warranty policy and procedures manual, or determine if any

			prior approval programme is in operation, prior to the installation of a new module/component
P054A-00	Cold Start Exhaust (B) Camshaft Position Timing Over-Advanced (Bank 1) - No sub type information	**NOTE:** - Circuit CAM_EX_SENSOR_A - ■ Engine oil pressure too low ■ Exhaust valve solenoid 1 circuit short circuit to ground, open circuit, high resistance ■ Exhaust valve solenoid 1 failure ■ Timing chains stretched beyond allowable limits	■ Check engine oil level and top up as required ■ Refer to the electrical circuit diagrams and check exhaust valve solenoid 1 sensor circuit for short circuit to ground, open circuit, high resistance ■ Check and install a new exhaust valve solenoid 1 sensor as required ■ Check service history /mileage ■ Check and install new timing chains as required ■ Refer to the warranty policy and procedures manual, or determine if any prior approval programme is in operation, prior to the installation of a new module/component
P054B-00	Cold Start Exhaust (B) Camshaft Position Timing Over-Retarded (Bank 1) - No sub type information	**NOTE:** - Circuit CAM_EX_SENSOR_A - ■ Engine oil pressure too low ■ Exhaust valve solenoid 1 circuit short circuit to ground, open circuit, high resistance	■ Check engine oil level and top up as required ■ Refer to the electrical circuit diagrams and check exhaust valve solenoid 1 sensor circuit for short circuit to ground, open circuit, high resistance ■ Check and install a new exhaust valve solenoid 1 sensor as required ■ Check service history /mileage

		■ Exhaust valve solenoid 1 failure ■ Timing chains stretched beyond allowable limits	■ Check and install new timing chains as required ■ Refer to the warranty policy and procedures manual, or determine if any prior approval programme is in operation, prior to the installation of a new module/component
P054C-00	Cold Start Exhaust (B) Camshaft Position Timing Over-Advanced (Bank 2) - No sub type information	△ NOTE: - Circuit CAM_EX_SENSOR_B - ■ Engine oil pressure too low ■ Exhaust valve solenoid 2 circuit short circuit to ground, open circuit, high resistance ■ Exhaust valve solenoid 2 failure ■ Timing chains stretched beyond allowable limits	■ Check engine oil level and top up as required ■ Refer to the electrical circuit diagrams and check exhaust valve solenoid 2 sensor circuit for short circuit to ground, open circuit, high resistance ■ Check and install a new exhaust valve solenoid 2 sensor as required ■ Check service history /mileage ■ Check and install new timing chains as required ■ Refer to the warranty policy and procedures manual, or determine if any prior approval programme is in operation, prior to the installation of a new module/component
P054D-00	Cold Start Exhaust (B) Camshaft Position Timing Over-Retarded (Bank 2) - No	△ NOTE: - Circuit CAM_EX_SENSOR_B -	■ Check engine oil level and top up as required ■ Refer to the electrical circuit diagrams and check exhaust valve solenoid 2 sensor circuit for short circuit to ground, open circuit, high resistance

	sub type information	■ Engine oil pressure too low ■ Exhaust valve solenoid 2 circuit short circuit to ground, open circuit, high resistance ■ Exhaust valve solenoid 2 failure ■ Timing chains stretched beyond allowable limits	■ Check and install a new exhaust valve solenoid 2 sensor as required ■ Check service history /mileage ■ Check and install new timing chains as required ■ Refer to the warranty policy and procedures manual, or determine if any prior approval programme is in operation, prior to the installation of a new module/component
P0560-13	System Voltage - Circuit open	**NOTE:** - Circuit BATTERY - ■ Engine control module power supply circuit, open circuit ■ Engine control module battery monitor disconnected	■ Refer to the electrical circuit diagrams and check engine control module power supply circuit for open circuit ■ Refer to the electrical circuit diagrams and check engine control module battery monitor circuit for open circuit
P0562-00	System Voltage Low - No sub type information	**NOTE:** - Circuit BATTERY - ■ Battery circuit high resistance ■ Generator circuit open circuit, high resistance ■ Generator failure	■ Refer to the electrical circuit diagrams and check battery circuit for high resistance ■ Refer to the electrical circuit diagrams and check generator circuit for open circuit, high resistance ■ Check and install a new generator as required. Refer to the warranty policy and procedures manual, or determine if any prior approval programme is in

			operation, prior to the installation of a new module/component
P0563-00	System Voltage High - No sub type information	**NOTE:** - Circuit BATTERY - ■ Battery circuit high resistance ■ Generator over charging	■ Refer to the electrical circuit diagrams and check battery circuit for high resistance ■ Check and install a new generator as required. Refer to the warranty policy and procedures manual, or determine if any prior approval programme is in operation, prior to the installation of a new module/component
P0572-17	Brake Switch A Circuit Low - Circuit voltage above threshold	**NOTE:** - Circuit BRAKE_SW - ■ Brake switch 2 sense circuit short circuit to ground ■ Brake switch incorrectly installed/adjusted ■ Customer is driving with foot resting on brake pedal ■ Brake switch 2 failure	■ Refer to the electrical circuit diagrams and check brake switch 2 circuit for short circuit to ground ■ Check brake switch is correctly installed and adjusted ■ Ensure customer is not driving with foot resting on brake pedal ■ Check and install a new brake switch as required. Refer to the warranty policy and procedures manual, or determine if any prior approval programme is in operation, prior to the installation of a new module/component
P0573-16	Brake Switch A Circuit High - Circuit voltage below threshold	**NOTE:** - Circuit BRAKE_SW -	■ Refer to the electrical circuit diagrams and check brake switch 1 circuit for open circuit

		■ Brake switch 1 sense circuit short circuit to ground ■ Brake switch 2 sense circuit open circuit ■ Brake switch incorrectly installed/adjusted ■ Customer is driving with foot resting on brake pedal ■ Brake switch 2 failure	■ Refer to the electrical circuit diagrams and check brake switch 2 circuit for open circuit ■ Check brake switch is correctly installed and adjusted ■ Ensure customer is not driving with foot resting on brake pedal ■ Check and install a new brake switch as required. Refer to the warranty policy and procedures manual, or determine if any prior approval programme is in operation, prior to the installation of a new module/component
P0578-00	Cruise Control Multi-Function Input A Circuit Stuck - No sub type information	■ Speed control circuit, output signal stuck ■ Speed control switch stuck	■ Refer to the electrical circuit diagrams and check speed control switch circuit for short circuit to ground ■ Check for stuck speed control switch, install a new switch pack as required. Refer to the warranty policy and procedures manual, or determine if any prior approval programme is in operation, prior to the installation of a new module/component
P057B-87	Brake Pedal Position Sensor Circuit Range /Performance - Missing message	■ Brake pressure signal missing from anti-lock braking system control module	■ Check the anti-lock braking system control module for related DTCs and refer to the relevant DTC index
P0590-	Cruise Control	■ Active speed limiter switch stuck	

00	Multi-Function Input B Circuit Stuck - No sub type information		■ Check for active speed limiter DTCs within gear shift module ■ Check and install a new gear shift module as required. Refer to the warranty policy and procedures manual, or determine if any prior approval programme is in operation, prior to the installation of a new module /component
P0600-49	Serial Communication Link - Internal electronic failure	■ Corrupt engine control module software ■ Engine control module power supply fault ■ Engine control module damage through water ingress	■ Using the manufacturer approved diagnostic system check and install latest relevant level of software to the engine control module ■ Check engine control module power supply circuit for open circuit ■ Check engine control module for signs of water ingress ■ Check and install a new engine control module as required. Refer to the warranty policy and procedures manual, or determine if any prior approval programme is in operation, prior to the installation of a new module /component
P0601-43	Internal Control Module Memory Check Sum Error - Special memory failure	■ Corrupt engine control module software flash ■ Engine control module power supply fault ■ Engine control module damage through water ingress	■ Using the manufacturer approved diagnostic system check and install latest relevant level of software to the engine control module ■ Check engine control module power supply circuit for open circuit

			■ Check engine control module for signs of water ingress ■ Check and install a new engine control module as required. Refer to the warranty policy and procedures manual, or determine if any prior approval programme is in operation, prior to the installation of a new module /component
P0601-45	Internal Control Module Memory Check Sum Error - Program memory failure	■ Corrupt engine control module software flash ■ Engine control module power supply fault ■ Engine control module damage through water ingress	■ Using the manufacturer approved diagnostic system check and install latest relevant level of software to the engine control module ■ Check engine control module power supply circuit for open circuit ■ Check engine control module for signs of water ingress ■ Check and install a new engine control module as required. Refer to the warranty policy and procedures manual, or determine if any prior approval programme is in operation, prior to the installation of a new module /component
P0604-42	Internal Control Module Random Access Memory	■ Corrupt engine control module software flash ■ Engine control module power supply fault ■ Engine control module damage through water ingress	■ Using the manufacturer approved diagnostic system check and install latest relevant level of software to the engine control module ■ Check engine control module power supply circuit for open circuit

	(RAM) Error - General memory failure		■ Check engine control module for signs of water ingress ■ Check and install a new engine control module as required. Refer to the warranty policy and procedures manual, or determine if any prior approval programme is in operation, prior to the installation of a new module /component
P0604-43	Internal Control Module Random Access Memory (RAM) Error - Special memory failure	■ Corrupt engine control module software flash ■ Engine control module power supply fault ■ Engine control module damage through water ingress	■ Using the manufacturer approved diagnostic system check and install latest relevant level of software to the engine control module ■ Check engine control module power supply circuit for open circuit ■ Check engine control module for signs of water ingress ■ Check and install a new engine control module as required. Refer to the warranty policy and procedures manual, or determine if any prior approval programme is in operation, prior to the installation of a new module /component
P0604-44	Internal Control Module Random Access Memory	■ Corrupt engine control module software flash ■ Engine control module power supply fault ■ Engine control module damage through water ingress	■ Using the manufacturer approved diagnostic system check and install latest relevant level of software to the engine control module ■ Check engine control module power supply circuit for open circuit

	(RAM) Error - Data memory failure		■ Check engine control module for signs of water ingress ■ Check and install a new engine control module as required. Refer to the warranty policy and procedures manual, or determine if any prior approval programme is in operation, prior to the installation of a new module /component
P0605-00	Internal Control Module Read Only Memory (ROM) Error - No sub type information	■ Corrupt engine control module software flash ■ Engine control module power supply fault ■ Engine control module damage through water ingress	■ Using the manufacturer approved diagnostic system check and install latest relevant level of software to the engine control module ■ Check engine control module power supply circuit for open circuit ■ Check engine control module for signs of water ingress ■ Check and install a new engine control module as required. Refer to the warranty policy and procedures manual, or determine if any prior approval programme is in operation, prior to the installation of a new module /component
P0605-29	Internal Control Module Read Only Memory (ROM) Error - Signal invalid	■ Corrupt engine control module software flash ■ Engine control module power supply fault ■ Engine control module damage through water ingress	■ Using the manufacturer approved diagnostic system check and install latest relevant level of software to the engine control module ■ Check engine control module power supply circuit for open circuit

			■ Check engine control module for signs of water ingress ■ Check and install a new engine control module as required. Refer to the warranty policy and procedures manual, or determine if any prior approval programme is in operation, prior to the installation of a new module /component
P0605-42	Internal Control Module Read Only Memory (ROM) Error - General memory failure	■ Corrupt engine control module software flash ■ Engine control module power supply fault ■ Engine control module damage through water ingress	■ Using the manufacturer approved diagnostic system check and install latest relevant level of software to the engine control module ■ Check engine control module power supply circuit for open circuit ■ Check engine control module for signs of water ingress ■ Check and install a new engine control module as required. Refer to the warranty policy and procedures manual, or determine if any prior approval programme is in operation, prior to the installation of a new module /component
P0605-44	Internal Control Module Read Only Memory (ROM) Error - Data memory failure	■ Corrupt engine control module software flash ■ Engine control module power supply fault ■ Engine control module damage through water ingress	■ Using the manufacturer approved diagnostic system check and install latest relevant level of software to the engine control module ■ Check engine control module power supply circuit for open circuit

			■ Check engine control module for signs of water ingress ■ Check and install a new engine control module as required. Refer to the warranty policy and procedures manual, or determine if any prior approval programme is in operation, prior to the installation of a new module /component
P0605-46	Internal Control Module Read Only Memory (ROM) Error - Calibration / parameter memory failure	■ Corrupt engine control module software flash ■ Engine control module power supply fault ■ Engine control module damage through water ingress	■ Using the manufacturer approved diagnostic system check and install latest relevant level of software to the engine control module ■ Check engine control module power supply circuit for open circuit ■ Check engine control module for signs of water ingress ■ Check and install a new engine control module as required. Refer to the warranty policy and procedures manual, or determine if any prior approval programme is in operation, prior to the installation of a new module /component
P0605-48	Internal Control Module Read Only Memory (ROM)	■ Corrupt engine control module software flash ■ Engine control module power supply fault ■ Engine control module damage through water ingress	■ Using the manufacturer approved diagnostic system check and install latest relevant level of software to the engine control module

	Error - Supervision software failure		■ Check engine control module power supply circuit for open circuit ■ Check engine control module for signs of water ingress ■ Check and install a new engine control module as required. Refer to the warranty policy and procedures manual, or determine if any prior approval programme is in operation, prior to the installation of a new module /component
P0605-64	Internal Control Module Read Only Memory (ROM) Error - Signal plausibility failure	■ Corrupt engine control module software flash ■ Engine control module power supply fault ■ Engine control module damage through water ingress	■ Using the manufacturer approved diagnostic system check and install latest relevant level of software to the engine control module ■ Check engine control module power supply circuit for open circuit ■ Check engine control module for signs of water ingress ■ Check and install a new engine control module as required. Refer to the warranty policy and procedures manual, or determine if any prior approval programme is in operation, prior to the installation of a new module /component
P0606-01	Control Module Processor - General electrical failure	■ Corrupt engine control module software flash ■ Engine control module power supply fault ■ Engine control module damage through water ingress	■ Using the manufacturer approved diagnostic system check and install latest relevant level of software to the engine control module

			■ Check engine control module power supply circuit for open circuit ■ Check engine control module for signs of water ingress ■ Check and install a new engine control module as required. Refer to the warranty policy and procedures manual, or determine if any prior approval programme is in operation, prior to the installation of a new module /component
P0606-04	Control Module Processor - System internal failures	■ Corrupt engine control module software flash ■ Engine control module power supply fault ■ Engine control module damage through water ingress	■ Using the manufacturer approved diagnostic system check and install latest relevant level of software to the engine control module ■ Check engine control module power supply circuit for open circuit ■ Check engine control module for signs of water ingress ■ Check and install a new engine control module as required. Refer to the warranty policy and procedures manual, or determine if any prior approval programme is in operation, prior to the installation of a new module /component
P0606-05	Control Module Processor -	■ Corrupt engine control module software flash ■ Engine control module power supply fault ■ Engine control module damage through water ingress	■ Using the manufacturer approved diagnostic system check and install latest relevant level of software to the engine control module

	System programming failures		■ Check engine control module power supply circuit for open circuit ■ Check engine control module for signs of water ingress ■ Check and install a new engine control module as required. Refer to the warranty policy and procedures manual, or determine if any prior approval programme is in operation, prior to the installation of a new module /component
P0606-41	Control Module Processor - General checksum failure	■ Corrupt engine control module software flash ■ Engine control module power supply fault ■ Engine control module damage through water ingress	■ Using the manufacturer approved diagnostic system check and install latest relevant level of software to the engine control module ■ Check engine control module power supply circuit for open circuit ■ Check engine control module for signs of water ingress ■ Check and install a new engine control module as required. Refer to the warranty policy and procedures manual, or determine if any prior approval programme is in operation, prior to the installation of a new module /component
P0606-42	Control Module Processor - General memory failure	■ Corrupt engine control module software flash ■ Engine control module power supply fault ■ Engine control module damage through water ingress	■ Using the manufacturer approved diagnostic system check and install latest relevant level of software to the engine control module

			■ Check engine control module power supply circuit for open circuit ■ Check engine control module for signs of water ingress ■ Check and install a new engine control module as required. Refer to the warranty policy and procedures manual, or determine if any prior approval programme is in operation, prior to the installation of a new module /component
P0606-43	Control Module Processor - Special memory failure	■ Corrupt engine control module software flash ■ Engine control module power supply fault ■ Engine control module damage through water ingress	■ Using the manufacturer approved diagnostic system check and install latest relevant level of software to the engine control module ■ Check engine control module power supply circuit for open circuit ■ Check engine control module for signs of water ingress ■ Check and install a new engine control module as required. Refer to the warranty policy and procedures manual, or determine if any prior approval programme is in operation, prior to the installation of a new module /component
P0606-44	Control Module Processor - Data memory failure	■ Corrupt engine control module software flash ■ Engine control module power supply fault ■ Engine control module damage through water ingress	■ Using the manufacturer approved diagnostic system check and install latest relevant level of software to the engine control module

			■ Check engine control module power supply circuit for open circuit ■ Check engine control module for signs of water ingress ■ Check and install a new engine control module as required. Refer to the warranty policy and procedures manual, or determine if any prior approval programme is in operation, prior to the installation of a new module /component
P0606-47	Control Module Processor - Watchdog / safety micro controller failure	■ Corrupt engine control module software flash ■ Engine control module power supply fault ■ Engine control module damage through water ingress	■ Using the manufacturer approved diagnostic system check and install latest relevant level of software to the engine control module ■ Check engine control module power supply circuit for open circuit ■ Check engine control module for signs of water ingress ■ Check and install a new engine control module as required. Refer to the warranty policy and procedures manual, or determine if any prior approval programme is in operation, prior to the installation of a new module /component
P0606-48	Control Module Processor - Supervision software failure	■ Corrupt engine control module software flash ■ Engine control module power supply fault	■ Using the manufacturer approved diagnostic system check and install latest relevant level of software to the engine control module

		■ Engine control module damage through water ingress	■ Check engine control module power supply circuit for open circuit ■ Check engine control module for signs of water ingress ■ Check and install a new engine control module as required. Refer to the warranty policy and procedures manual, or determine if any prior approval programme is in operation, prior to the installation of a new module /component
P0606-49	Control Module Processor - Internal electronic failure	■ Corrupt engine control module software flash ■ Engine control module power supply fault ■ Engine control module damage through water ingress	■ Using the manufacturer approved diagnostic system check and install latest relevant level of software to the engine control module ■ Check engine control module power supply circuit for open circuit ■ Check engine control module for signs of water ingress ■ Check and install a new engine control module as required. Refer to the warranty policy and procedures manual, or determine if any prior approval programme is in operation, prior to the installation of a new module /component
P0607-00	Control Module Performance - No sub type	■ Corrupt engine control module software flash ■ Engine control module power supply fault	

	information	■ Engine control module damage through water ingress	■ Using the manufacturer approved diagnostic system check and install latest relevant level of software to the engine control module ■ Check engine control module power supply circuit for open circuit ■ Check engine control module for signs of water ingress ■ Check and install a new engine control module as required. Refer to the warranty policy and procedures manual, or determine if any prior approval programme is in operation, prior to the installation of a new module /component
P0610-43	Control Module Vehicle Options Error - Special memory failure	■ Corrupt engine control module software flash ■ Corrupt rear junction box software flash ■ Corrupt central junction box software flash	■ Clear the DTC and re-test ■ Using the manufacturer approved diagnostic system check and install latest relevant level of software to the engine control module ■ Re-configure the rear junction box using the manufacturer approved diagnostic system ■ Re-configure the central junction box using the manufacturer approved diagnostic system
P0615-13	Starter Relay Circuit - Circuit open	△ NOTE:	■ Refer to the electrical circuit diagrams and check starter relay control circuit for open circuit

		- Circuit STARTER_RELAY_NEG - ■ Starter relay control circuit open circuit ■ Starter relay failure	■ Check and install a new starter relay as required. Refer to the warranty policy and procedures manual, or determine if any prior approval programme is in operation, prior to the installation of a new module/component
P0616-11	Starter Relay Circuit Low - Circuit short to ground	NOTE: - Circuit STARTER_RELAY_NEG - ■ Starter relay control circuit short circuit to ground ■ Starter relay failure	■ Refer to the electrical circuit diagrams and check starter relay control circuit for short circuit to ground ■ Check and install a new starter relay as required. Refer to the warranty policy and procedures manual, or determine if any prior approval programme is in operation, prior to the installation of a new module/component
P0617-12	Starter Relay Circuit High - Circuit short to battery	NOTE: - Circuit STARTER_RELAY_NEG - ■ Starter relay control circuit short circuit to power ■ Starter relay failure	■ Refer to the electrical circuit diagrams and check starter relay control circuit for short circuit to power ■ Check and install a new starter relay as required. Refer to the warranty policy and procedures manual, or determine if any prior approval programme is in operation, prior to the installation of a new module/component
P061A-00	Internal Control Module Torque Performance - No sub type information	■ Manifold air flow sensor(s) failure ■ Electronic throttle unit failure	■ Check for related DTCs ■ Check manifold air flow sensors are reading correctly ■ Check and install a new manifold air flow sensor(s) as required

			■ Check throttle position sensors are reading the same position ■ Check throttle body is clear of any deposits ■ Check and install a new electronic throttle unit as required. Refer to the warranty policy and procedures manual, or determine if any prior approval programme is in operation, prior to the installation of a new module /component
P061A-04	Internal Control Module Torque Performance - System internal failures	■ Manifold air flow sensor(s) failure ■ Electronic throttle unit failure	■ Check for related DTCs ■ Check manifold air flow sensors are reading correctly ■ Check and install a new manifold air flow sensor(s) as required ■ Check throttle position sensors are reading the same position ■ Check throttle body is clear of any deposits ■ Check and install a new electronic throttle unit as required. Refer to the warranty policy and procedures manual, or determine if any prior approval programme is in operation, prior to the installation of a new module /component
P061A-	Internal	■ Intake system air leak	■ Check for related DTCs

29	Control Module Torque Performance - Signal invalid	■ Manifold air flow sensor(s) failure ■ Throttle position sensors are reading incorrectly ■ Electronic throttle unit failure ■ Atmospheric pressure sensor failure	■ Check intake air system for leaks ■ Check manifold air flow sensors are reading correctly ■ Check and install a new air flow sensor (s) as required ■ Check throttle position sensors are reading the same position ■ Check throttle body is clear of any deposits ■ Check and install a new electronic throttle unit as required ■ Refer to the warranty policy and procedures manual, or determine if any prior approval programme is in operation, prior to the installation of a new module/component
P061A-64	Internal Control Module Torque Performance - Signal plausibility failure	■ Intake system air leak ■ Manifold air flow sensor(s) failure	■ Check for related DTCs ■ Check intake air system for leaks and is correctly installed ■ Check manifold air flow sensors are reading correctly ■ Check and install a new manifold air flow sensor(s) as required. Refer to the warranty policy and procedures manual, or determine if any prior approval programme is in operation, prior to the installation of a new module /component

P061B-62	Internal Control Module Torque Calculation Performance - Signal compare failure	■ Intake system air leak ■ Engine breather system leak ■ Manifold air flow sensor failure ■ Electronic throttle unit failure ■ Throttle position sensors are reading incorrectly ■ Atmospheric pressure sensor failure	■ Check intake air system for leaks ■ Check engine breather system for leaks ■ Check throttle position sensors are reading the same position ■ Check and install a new manifold air flow sensor as required ■ Check and install a new electronic throttle unit as required ■ Refer to the warranty policy and procedures manual, or determine if any prior approval programme is in operation, prior to the installation of a new module/component
P0620-01	Generator Control Circuit - General electrical failure	△ NOTE: - Circuit LIN_A - ■ Generator B+ or battery terminal disconnected/poor connection ■ Charging circuit short, open circuit ■ Generator failure	■ Check for good/clean contact at generator B+ and battery terminal connectors ■ Refer to the electrical circuit diagrams and check charging circuit for short circuit, open circuit ■ Clear DTC and repeat automated diagnostic procedure using the manufacturer approved diagnostic system ■ If DTC remains, check and install a new generator as required. Refer to the warranty policy and procedures manual, or determine if any prior approval programme is in operation, prior to the installation of a new module /component

P0627-00	Fuel Pump A Control Circuit / Open - No sub type information	■ Connector is disconnected, connector pin is backed out, connector pin corrosion ■ Harness failure between fuel pump driver module and engine control module ■ Fuel pump driver module is used by the engine control module to operate the fuel pump by fuel demand ■ Fuel pump driver module control circuit short circuit to ground, short circuit to power, open circuit, high resistance ■ Fuel pump driver module failure	■ Inspect connectors for signs of water ingress, and pins for damage and/or corrosion ■ Refer to the electrical circuit diagrams and check fuel pump driver module control circuit for short circuit to ground, short circuit to power, open circuit, high resistance ■ Using the manufacturer approved diagnostic system clear all stored DTCs using the 'Diagnosis Menu' tab and retest ■ Check and install new fuel pump driver module as required
P062A-00	Fuel Pump A Control Circuit Range /Performance - No sub type information	■ Invalid fuel pump duty requested by the engine control module	■ Refer to the electrical circuit diagrams and check the fuel pump driver module circuit for short circuit to ground, short circuit to power, open circuit, high resistance
P0630-00	VIN Not Programmed or Incompatible - ECM/PCM - No sub type information	■ Car configuration file to CAN VIN mismatch ■ New engine control module fitted and incorrectly configured ■ New central junction box fitted and incorrectly configured	■ Using the manufacturer approved diagnostic system check and install latest relevant level of software to the engine control module, clear DTC and re-test ■ Re-configure the central junction box using the manufacturer approved diagnostic system, clear DTC and re-test

P0634-22	PCM / ECM/ TCM Internal Temperature Too High - Signal amplitude > maximum	■ Engine control module internal temperature too high	■ Clear the DTC. With the ignition off, wait 10 minutes and re-check DTC ■ Check the engine control module does not have additional external covering or obstructions which may cause overheating ■ Check and install a new engine control module as required. Refer to the warranty policy and procedures manual, or determine if any prior approval programme is in operation, prior to the installation of a new module /component
P0634-4B	PCM / ECM / TCM Internal Temperature A Too High - Over temperature	■ Engine control module internal temperature too high	■ Clear the DTC. With the ignition off, wait 10 minutes and re-check DTC ■ Check the engine control module does not have additional external covering or obstructions which may cause overheating ■ Check and install a new engine control module as required. Refer to the warranty policy and procedures manual, or determine if any prior approval programme is in operation, prior to the installation of a new module /component
P0642-00	Sensor Reference Voltage A Circuit Low -	**NOTE:** - Circuit SENSOR_5V_SUPPLY -	■ Refer to the electrical circuit diagrams and check 5V supply circuit for short

	No sub type information	■ Short circuit to power of a 5V output pin, either in the harness, or a connector ■ Internal short circuit in a faulty component	circuit to ground open circuit, high resistance, terminal damage or corrosion ■ Check engine control module for sensor related DTCs and refer to the relevant DTC index
P0643-00	Sensor Reference Voltage A Circuit High - No sub type information	**NOTE:** - Circuit SENSOR_5V_SUPPLY - ■ Short circuit to ground of a 5V output pin, either in the harness, or a connector ■ Internal short circuit in a faulty component	■ Refer to the electrical circuit diagrams and check 5V supply circuit for short circuit to power open circuit, high resistance, terminal damage or corrosion ■ Check engine control module for sensor related DTCs and refer to the relevant DTC index
P0657-13	Actuator Supply Voltage A Circuit / Open - Circuit open	**NOTES:** ■ Jaguar - Circuit IMTV - ■ LR - Circuit MANIFOLD TUNING VALVE - ■ Intake manifold tuning solenoid circuit, open circuit	■ Refer to the electrical circuit diagrams and check intake manifold tuning solenoid circuit for open circuit
P0658-11	Actuator Supply Voltage A Circuit Low - Circuit short to ground	**NOTES:** ■ Jaguar - Circuit IMTV - ■ LR - Circuit MANIFOLD TUNING VALVE -	■ Refer to the electrical circuit diagrams and check intake manifold tuning solenoid circuit for short circuit to ground

		■ Intake manifold tuning solenoid circuit, short circuit to ground	
P0659-12	Actuator Supply Voltage A Circuit High - Circuit short to battery	**NOTES:** ■ Jaguar - Circuit IMTV - ■ LR - Circuit MANIFOLD TUNING VALVE - ■ Intake manifold tuning solenoid circuit, short circuit to power	■ Refer to the electrical circuit diagrams and check intake manifold tuning solenoid circuit for short circuit to power
P065B-16	Generator Control Circuit Range /Performance - Circuit voltage below threshold	**NOTE:** - Circuit LIN_A - ■ Generator B+ or battery terminal disconnected/poor connection ■ Charging circuit short, open circuit ■ Generator failure ■ Battery failure	■ Check for good/clean contact at generator B+ and battery terminal connectors ■ Refer to the electrical circuit diagrams and check charging circuit for short circuit, open circuit ■ Ensure the battery is in a fully charged and serviceable condition. Refer to the battery care manual and the relevant sections of the workshop manual ■ Clear DTC and repeat automated diagnostic procedure using the manufacturer approved diagnostic system. If DTC remains, check and install a new generator as required. Refer to the warranty policy and procedures manual, or determine if any

			prior approval programme is in operation, prior to the installation of a new module/component
P065B-17	Generator Control Circuit Range /Performance - Circuit voltage above threshold	**NOTE:** - Circuit LIN_A - ■ Charging circuit short circuit to power ■ Generator failure ■ Battery failure	■ Check for good/clean contact at generator B+ and battery terminal connectors ■ Refer to the electrical circuit diagrams and check charging circuit for short circuit, open circuit ■ Ensure the battery is in a fully charged and serviceable condition. Refer to the battery care manual and the relevant sections of the workshop manual ■ Clear DTC and repeat automated diagnostic procedure using the manufacturer approved diagnostic system. If DTC remains, check and install a new generator as required. Refer to the warranty policy and procedures manual, or determine if any prior approval programme is in operation, prior to the installation of a new module/component
P065C-00	Generator Mechanical Performance - No sub type information	**NOTE:** - Circuit LIN_A - ■ Poor front end accessory belt tension	■ Check front end accessory belt for condition/contamination and correct tension ■ Check generator pulley for failure

		■ Generator pulley loose/failure ■ Generator failure	■ Clear DTC and repeat automated diagnostic procedure using manufacturer approved diagnostic system ■ If DTC remains check and install a new generator as required. Refer to the warranty policy and procedures manual, or determine if any prior approval programme is in operation, prior to the installation of a new module /component
P0660-13	Intake Manifold Tuning Valve Control Circuit Low - Bank 1 - Circuit open	**NOTES:** ■ - Circuit IMTV - ■ LR - Circuit MANIFOLD TUNING VALVE - ■ Intake manifold tuning valve circuit open circuit	■ Refer to the electrical circuit diagrams and check intake manifold tuning valve circuit for open circuit
P0661-11	Intake Manifold Tuning Valve Control Circuit Low - Bank 1 - Circuit short to ground	**NOTES:** ■ - Circuit IMTV - ■ LR - Circuit MANIFOLD TUNING VALVE - ■ Intake manifold tuning valve circuit short circuit to ground	■ Refer to the electrical circuit diagrams and check intake manifold tuning valve circuit for short circuit to ground

P0662-12	Intake Manifold Tuning Valve Control Circuit Low - Bank 1 - Circuit short to battery	**NOTES:** - Circuit IMTV - LR - Circuit MANIFOLD TUNING VALVE - Intake manifold tuning valve circuit short circuit to power	Refer to the electrical circuit diagrams and check manifold tuning valve circuit for short circuit to power
P0668-00	PCM / ECM / TCM Internal Temperature Sensor A Circuit Low - No sub type information	Engine control module internal temperature sensor failure	Check and install a new engine control module as required. Refer to the warranty policy and procedures manual, or determine if any prior approval programme is in operation, prior to the installation of a new module /component
P0669-00	PCM / ECM / TCM Internal Temperature Sensor A Circuit High - No sub type information	Engine control module internal temperature sensor failure	Check and install a new engine control module as required. Refer to the warranty policy and procedures manual, or determine if any prior approval programme is in operation, prior to the installation of a new module /component
P0687-73	ECM/PCM Power Relay Control Circuit High - Actuator stuck closed	**NOTE:** - Circuit EMS_MAIN_RLY -	Refer to the electrical circuit diagrams and check engine control module relay circuit for short circuit to power Check and install a new engine control module relay as required. Refer to the warranty policy and procedures manual, or determine if any prior

		■ Engine control module relay circuit short circuit to power ■ Engine control module relay failure	approval programme is in operation, prior to the installation of a new module /component
P0691-11	Fan 1 Control Circuit Low - Circuit short to ground	NOTE: LR - Circuit VISCOUS FAN CTRL - ■ Viscous fan circuit, short circuit to ground ■ Viscous fan control module failure	■ Refer to the electrical circuit diagrams and check viscous fan circuit for short circuit to ground ■ Check and install a new viscous fan as required. Refer to the warranty policy and procedures manual, or determine if any prior approval programme is in operation, prior to the installation of a new module/component
P0692-12	Fan 1 Control Circuit High - Circuit short to battery	NOTE: LR - Circuit VISCOUS FAN CTRL - ■ Viscous fan circuit, short circuit to power ■ Viscous fan control module failure	■ Refer to the electrical circuit diagrams and check viscous fan circuit for short circuit to power ■ Check and install a new viscous fan as required. Refer to the warranty policy and procedures manual, or determine if any prior approval programme is in operation, prior to the installation of a new module/component
P0721-85	Output Shaft Speed Sensor Circuit Range /Performance - Signal above allowable range	■ Transmission control module has reported a fault in the shaft speed signal	■ Check transmission control module for related DTCs and refer to relevant DTC index
P0721-	Output Shaft		

86	Speed Sensor Circuit Range /Performance - Signal invalid	■ Transmission control module has taken to 8 seconds or longer to change range	■ Check transmission control module for related DTCs and refer to relevant DTC index
P0724-17	Brake Switch B Circuit High - Circuit voltage above threshold	**NOTE:** - Circuit BRAKE_SW - ■ Brake switch 1 sense circuit short circuit to power ■ Brake switch incorrectly installed/adjusted ■ Customer is driving with foot resting on brake pedal ■ Brake switch 1 failure	■ Refer to the electrical circuit diagrams and check brake switch 1 circuit for short circuit to power ■ Check brake switch is correctly installed and adjusted ■ Ensure customer is not driving with foot resting on brake pedal ■ Check and install a new brake switch as required. Refer to the warranty policy and procedures manual, or determine if any prior approval programme is in operation, prior to the installation of a new module/component
P0850-86	Park / Neutral Switch Input Circuit - Signal invalid	**NOTE:** - Circuit PN_SW - ■ Intermittent fault on Park/Neutral signal from gear shift module ■ CAN network failure between gear shift module and engine control module	■ Check gear shift module for related DTCs and refer to relevant DTC index ■ Refer to the electrical circuit diagrams and check Park/Neutral switch input circuit for short circuit to ground, short circuit to power, open circuit ■ Using the manufacturer approved diagnostic system, complete a CAN network integrity test
P0850-8F	Park / Neutral Switch Input	**NOTE:**	■ Check gear shift module for related DTCs and refer to relevant DTC index

	Circuit - Erratic	- Circuit PN_SW - ■ Intermittent fault on Park/Neutral signal from gear shift module ■ CAN network failure between gear shift module and engine control module	■ Refer to the electrical circuit diagrams and check Park/Neutral switch input circuit for short circuit to ground, short circuit to power, open circuit ■ Using the manufacturer approved diagnostic system, complete a CAN network integrity test
P0851-14	Park / Neutral Switch Input Circuit Low - Circuit short to ground or open	△ NOTE: - Circuit PN_SW - ■ Park/Neutral switch input circuit short circuit to ground, open circuit	■ Refer to the electrical circuit diagrams and check park/neutral switch input circuit for short circuit to ground, open circuit
P0852-12	Park / Neutral Switch Input Circuit Low - Circuit short to battery	△ NOTE: - Circuit PN_SW - ■ Park/Neutral switch input circuit short circuit to power	■ Refer to the electrical circuit diagrams and check park/neutral switch input circuit for short circuit to power
P0A1A-87	Generator Control Module - Missing message	△ NOTE: - Circuit LIN_A -	■ Check for good/clean contact at generator and engine control module LIN circuit connectors/pins

		■ Generator to engine control module LIN circuit open circuit	■ Refer to the electrical circuit diagrams and check generator circuit for open circuit ■ Check for engine control module hardware DTCs and refer to relevant DTC index ■ Clear DTCs and repeat automated diagnostic procedure using the manufacturer approved diagnostic system
P0A1A-88	Generator Control Module - Bus off	**NOTE:** - Circuit LIN_A - ■ Generator to engine control module LIN circuit open circuit	■ Check for good/clean contact at generator and engine control module LIN circuit connectors/pins ■ Refer to the electrical circuit diagrams and check generator circuit for open circuit ■ Check for engine control module hardware DTCs and refer to relevant DTC index ■ Clear DTCs and repeat automated diagnostic procedure using the manufacturer approved diagnostic system
P0A3B-00	Generator Over Temperature - No sub type information	■ Cooling fan not operating ■ Coolant level low	■ Check for correct cooling fan operation ■ Check coolant level. Clear DTC and re-test
P0A3B-	Generator Over	■ Cooling fan not operating	■ Check for correct cooling fan operation

68	Temperature - Event information	■ Coolant level low	■ Check coolant level. Clear DTC and re-test
P115D-00	Mass Air Flow Circuit Offset - No sub type information	**NOTE:** - Circuit MAF_SENSOR_A - MAF_SENSOR_B - **NOTE:** Customer likely to report hesitation. Air cleaner blocked ■ Air intake leak ■ Engine breather blocked ■ Air intake blockage ■ Carbon build up on throttle blade ■ Mass air flow sensor circuit, high resistance ■ Blocked catalyst(s) ■ Mass air flow sensor failure	■ Using the manufacturer approved diagnostic system check datalogger signal, Mass Air Flow Sensor 2 Voltage (0x0503) ■ Check air cleaner for blockage ■ Check air intake system for leaks ■ Check engine breather system for blockages ■ Check for carbon build up on throttle blade ■ Check for related mass air flow DTCs P0102 or P0103 ■ Refer to the electrical circuit diagrams and check mass air flow sensor circuit for high resistance ■ Check and install a new mass air flow sensor as required. Refer to the warranty policy and procedures manual, or determine if any prior approval programme is in operation, prior to the installation of a new module /component
P1315-00	Persistent Misfire - No sub type information	■ Engine control module to ignition coil primary circuit fault (cylinder misfire detected DTC also flagged) ■ Fuel injector circuit fault(s) (injector DTCs also flagged)	■ Check for cylinder mis-fire, ignition and injector DTCs and refer to the DTC index ■ Refer to the electrical circuit diagrams and check ignition coil circuit for short

			■ Fuel delivery pressure low ■ Spark plug failure/fouled/incorrect gap ■ Ignition coil failure ■ Cylinder compression low ■ Exhaust system blockage	circuit to ground, short circuit to power, open circuit ■ Check for fuel system failure ■ Check and install a new spark plug(s) as required ■ Check and install a new ignition coil as required ■ Carry out cylinder compression tests ■ Check exhaust system for blockage ■ Refer to the warranty policy and procedures manual, or determine if any prior approval programme is in operation, prior to the installation of a new module/component
P1316-00	Injector Driver Module Codes Detected - No sub type information		■ Engine control module to ignition coil primary circuit fault (cylinder misfire detected DTC also flagged) ■ Fuel injector circuit fault(s) (injector DTCs also flagged) ■ Fuel delivery pressure low ■ Spark plug failure/fouled/incorrect gap ■ Ignition coil failure ■ Cylinder compression low ■ Exhaust system blockage	■ Check for cylinder mis-fire, ignition and injector DTCs and refer to the DTC index ■ Refer to the electrical circuit diagrams and check ignition coil circuit for short circuit to ground, short circuit to power, open circuit ■ Check for fuel system failure ■ Check and install a new spark plug(s) as required ■ Check and install a new ignition coil as required ■ Carry out cylinder compression tests ■ Check exhaust system for blockage

			■ Refer to the warranty policy and procedures manual, or determine if any prior approval programme is in operation, prior to the installation of a new module/component
P1593-64	Cruise Control Monitor Fault - Signal plausibility failure	■ Speed control monitor fault. The engine control module performs a independent check of the cruise status	■ Using the manufacturer approved diagnostic system check and up-date the car configuration file as required. Clear the DTC and retest. If the problem persists, contact dealer technical support
P1603-00	EEPROM Malfunction - No sub type information	■ Corrupt engine control module software flash ■ Engine control module power supply fault ■ Engine control module damage through water ingress	■ Using the manufacturer approved diagnostic system check and install latest relevant level of software to the engine control module ■ Refer to the electrical circuit diagrams and check engine control module power supply circuit for open circuit ■ Check engine control module for signs of water ingress ■ Check and install a new engine control module as required. Refer to the warranty policy and procedures manual, or determine if any prior approval programme is in operation, prior to the installation of a new module /component
P2088-11	A Camshaft Position	**NOTE:**	

	Actuator Control Circuit Low Bank 1 - Circuit short to ground	- Circuit VFS_IN_A - ■ Intake valve solenoid 1 short circuit to ground	■ Refer to the electrical circuit diagrams and check intake valve solenoid 1 for short circuit to ground
P2089-12	A Camshaft Position Actuator Control Circuit High Bank 1 - Circuit short to battery	NOTE: - Circuit VFS_IN_A - ■ Intake valve solenoid 1 short circuit to power	■ Refer to the electrical circuit diagrams and check intake valve solenoid 1 for short circuit to power
P2090-11	B Camshaft Position Actuator Control Circuit Low Bank 1 - Circuit short to ground	NOTE: - Circuit VFS_EX_A - ■ Exhaust valve solenoid 1 short circuit to ground	■ Refer to the electrical circuit diagrams and check exhaust valve solenoid 1 for short circuit to ground
P2091-12	B Camshaft Position Actuator Control Circuit High Bank 1 - Circuit short to battery	NOTE: - Circuit VFS_EX_A - ■ Exhaust valve solenoid 1 short circuit to power	■ Refer to the electrical circuit diagrams and check exhaust valve solenoid 1 for short circuit to power
P2092-	A Camshaft	NOTE:	

11	Position Actuator Control Circuit Low Bank 2 - Circuit short to ground	- Circuit VFS_IN_B - ■ Intake valve solenoid 2 short circuit to ground	■ Refer to the electrical circuit diagrams and check intake valve solenoid 2 for short circuit to ground
P2093-12	A Camshaft Position Actuator Control Circuit High Bank 2 - Circuit short to battery	NOTE: - Circuit VFS_IN_B - ■ Intake valve solenoid 2 short circuit to power	■ Refer to the electrical circuit diagrams and check intake valve solenoid 2 for short circuit to power
P2094-11	B Camshaft Position Actuator Control Circuit Low Bank 2 - Circuit short to ground	NOTE: - Circuit VFS_EX_B - ■ Exhaust valve solenoid 2 short circuit to ground	■ Refer to the electrical circuit diagrams and check exhaust valve solenoid 2 for short circuit to ground
P2095-12	B Camshaft Position Actuator Control Circuit High Bank 2 - Circuit short to battery	NOTE: - Circuit VFS_EX_B - ■ Exhaust valve solenoid 2 short circuit to power	■ Refer to the electrical circuit diagrams and check exhaust valve solenoid 2 for short circuit to power
P2096-	Post Catalyst		

00	Fuel Trim System Too Lean Bank 1 - No sub type information	**NOTE:** - Circuit HEGO_SENSOR_A - ■ Post catalyst oxygen sensor odd, sensing circuit short circuit to ground, high resistance, open circuit ■ Air leak between catalyst and exhaust manifold ■ Air leak between the two oxygen sensors ■ Post catalyst oxygen sensor odd, failure	■ Refer to the electrical circuit diagrams and check post catalyst oxygen sensor - odd, sensing circuit for short circuit to ground, high resistance, open circuit ■ Check for air leak between catalyst and exhaust manifold ■ Check for air leak between the two oxygen sensors ■ Check and install new post catalyst oxygen sensor odd, as required. Refer to the warranty policy and procedures manual, or determine if any prior approval programme is in operation, prior to the installation of a new module /component
P2097-00	Post Catalyst Fuel Trim System Too Rich Bank 1 - No sub type information	**NOTE:** - Circuit HEGO_SENSOR_A - ■ Post catalyst oxygen sensor odd, sensing circuit short circuit to ground, high resistance, open circuit ■ Air leak between catalyst and exhaust manifold ■ Air leak between the two oxygen sensors ■ Post catalyst oxygen sensor odd, failure	■ Refer to the electrical circuit diagrams and check post catalyst oxygen sensor - odd, sensing circuit for short circuit to ground, high resistance, open circuit ■ Check for air leak between catalyst and exhaust manifold ■ Check for air leak between the two oxygen sensors ■ Check and install new post catalyst oxygen sensor odd, as required. Refer to the warranty policy and procedures manual, or determine if any prior approval programme is in operation, prior to the installation of a new module /component

P2098-00	Post Catalyst Fuel Trim System Too Lean Bank 2 - No sub type information	**NOTE:** - Circuit HEGO_SENSOR_B - ■ Post catalyst oxygen sensor even, sensing circuit short circuit to ground, high resistance, open circuit ■ Air leak between catalyst and exhaust manifold ■ Air leak between the two oxygen sensors ■ Post catalyst oxygen sensor even, failure	■ Refer to the electrical circuit diagrams and check post catalyst oxygen sensor even, sensing circuit for short circuit to ground, high resistance, open circuit ■ Check for air leak between catalyst and exhaust manifold ■ Check for air leak between the two oxygen sensors ■ Check and install new post catalyst oxygen sensor even, as required. Refer to the warranty policy and procedures manual, or determine if any prior approval programme is in operation, prior to the installation of a new module /component
P2099-00	Post Catalyst Fuel Trim System Too Rich Bank 2 - No sub type information	**NOTE:** - Circuit HEGO_SENSOR_B - ■ Post catalyst oxygen sensor even, sensing circuit short circuit to ground, high resistance, open circuit ■ Air leak between catalyst and exhaust manifold ■ Air leak between the two oxygen sensors ■ Post catalyst oxygen sensor even, failure	■ Refer to the electrical circuit diagrams and check post catalyst oxygen sensor even, sensing circuit for short circuit to ground, high resistance, open circuit ■ Check for air leak between catalyst and exhaust manifold ■ Check for air leak between the two oxygen sensors ■ Check and install new post catalyst oxygen sensor even, as required. Refer to the warranty policy and procedures manual, or determine if any prior approval programme is in operation, prior to the installation of a new module /component

P2105-00	Throttle Actuator Control System - Forced Engine Shutdown - No sub type information	**NOTE:** - Circuit THROTTLE_MOTOR_NEG - THROTTLE_MOTOR_POS - ■ Engine speed or torque limitation has been activated as a result of engine control module, throttle pedal position sensor, or torque faults	■ Check for any DTCs relating to engine control module, throttle pedal position sensor, or torque faults and refer to the DTC index
P2118-19	Throttle Actuator Control Motor Current Range /Performance - Circuit current above threshold	**NOTE:** - Circuit THROTTLE_MOTOR_NEG - THROTTLE_MOTOR_POS - ■ Throttle motor control circuit short circuit to ground, short circuit to power, high resistance ■ Engine control module ground circuit fault ■ Carbon build-up on throttle blade ■ Electronic throttle unit failure	■ Refer to the electrical circuit diagrams and check electronic throttle unit circuit for short circuit to ground, short circuit to power, high resistance ■ Refer to the electrical circuit diagrams and check engine control module ground circuit for faults ■ Make sure throttle blade is clean of carbon ■ Check the system is operating correctly and the DTC does not return ■ Check and install a new electronic throttle unit as required. Refer to the warranty policy and procedures manual, or determine if any prior approval programme is in operation, prior to the installation of a new module /component
P2119-00	Throttle Actuator	**NOTE:**	■ Make sure throttle blade is clean of carbon

	Control Throttle Body Range /Performance - No sub type information	- Circuit THROTTLE_MOTOR_NEG - THROTTLE_MOTOR_POS - ■ Carbon build-up on throttle blade ■ Engine control module ground circuit fault ■ Electronic throttle unit return spring faulty ■ Electronic throttle unit limp home spring faulty	■ Refer to the electrical circuit diagrams and check engine control module ground circuit for faults ■ Check the system is operating correctly and the DTC does not return ■ Check and install a new electronic throttle unit as required. Refer to the warranty policy and procedures manual, or determine if any prior approval programme is in operation, prior to the installation of a new module /component
P2119-29	Throttle Actuator Control Throttle Body Range /Performance - Signal invalid	NOTE: - Circuit THROTTLE_MOTOR_NEG - THROTTLE_MOTOR_POS - ■ Stuck / sticking throttle blade ■ Electronic throttle unit failure	■ Ensure throttle blade is free of any carbon build-up / other obstructions ■ Check the system is operating correctly and the DTC does not return ■ Check and install a new electronic throttle unit as required. Refer to the warranty policy and procedures manual, or determine if any prior approval programme is in operation, prior to the installation of a new module /component
P2119-64	Throttle Actuator Control Throttle Body Range /Performance - Signal	NOTE: - Circuit THROTTLE_MOTOR_NEG - THROTTLE_MOTOR_POS -	■ Ensure throttle blade is free of any carbon build-up / other obstructions ■ Check the system is operating correctly and the DTC does not return ■ Check and install a new electronic throttle unit as required. Refer to the

	plausibility failure	■ Stuck / sticking throttle blade ■ Electronic throttle unit failure	warranty policy and procedures manual, or determine if any prior approval programme is in operation, prior to the installation of a new module /component
P2122-00	Throttle/Pedal Position Sensor /Switch D Circuit Low - No sub type information	**NOTE:** - Circuit THROTTLE_POSITION_SENSOR_1 - ■ Accelerator pedal position sensor 1 circuit short circuit to ground, open circuit ■ Accelerator pedal position sensor 1, VREF circuit open circuit ■ Accelerator pedal position sensor 1 failure	■ Refer to the electrical circuit diagrams and check accelerator pedal unit, accelerator pedal position sensor 1 circuit for short circuit to ground, open circuit ■ Check accelerator pedal unit, VREF circuit for open circuit ■ Clear DTC and repeat automated diagnostic procedure using the manufacturer approved diagnostic system ■ If DTC remains, check and install a new accelerator pedal unit as required. Refer to the warranty policy and procedures manual, or determine if any prior approval programme is in operation, prior to the installation of a new module/component
P2123-00	Throttle/Pedal Position Sensor /Switch D Circuit High - No sub type information	**NOTE:** - Circuit THROTTLE_POSITION_SENSOR_1 - ■ Accelerator pedal position sensor 1 circuit short circuit to power	■ Refer to the electrical circuit diagrams and check accelerator pedal unit, accelerator pedal position sensor 1 circuit for short circuit to power ■ Check accelerator pedal unit, VREF circuit for open circuit

		■ Accelerator pedal position sensor 1, VREF circuit open circuit ■ Accelerator pedal position sensor 1 failure	■ Clear DTC and repeat automated diagnostic procedure using the manufacturer approved diagnostic system ■ If DTC remains, check and install a new accelerator pedal unit as required. Refer to the warranty policy and procedures manual, or determine if any prior approval programme is in operation, prior to the installation of a new module/component
P2127-00	Throttle/Pedal Position Sensor /Switch E Circuit Low - No sub type information	**NOTE:** - Circuit THROTTLE_POSITION_SENSOR_2 - ■ Accelerator pedal position sensor 2 circuit short circuit to ground, open circuit ■ Accelerator pedal position sensor 2, VREF circuit open circuit ■ Accelerator pedal position sensor 2 failure	■ Refer to the electrical circuit diagrams and check accelerator pedal unit, accelerator pedal position sensor 2 circuit for short circuit to ground, open circuit ■ Check accelerator pedal unit, VREF circuit for open circuit ■ Clear DTC and repeat automated diagnostic procedure using the manufacturer approved diagnostic system ■ If DTC remains, check and install a new accelerator pedal unit as required. Refer to the warranty policy and procedures manual, or determine if any prior approval programme is in operation, prior to the installation of a new module/component
P2128-	Throttle/Pedal	**NOTE:**	

00	Position Sensor /Switch E Circuit High - No sub type information	- Circuit THROTTLE_POSITION_SENSOR_2 - ■ Accelerator pedal position sensor 2 circuit short circuit to power ■ Accelerator pedal position sensor 2, VREF circuit open circuit ■ Accelerator pedal position sensor 2 failure	■ Refer to the electrical circuit diagrams and check accelerator pedal unit, accelerator pedal position sensor 2 circuit for short circuit to power ■ Check accelerator pedal unit, VREF circuit for open circuit ■ Clear DTC and repeat automated diagnostic procedure using the manufacturer approved diagnostic system ■ If DTC remains, check and install a new accelerator pedal unit as required. Refer to the warranty policy and procedures manual, or determine if any prior approval programme is in operation, prior to the installation of a new module/component
P2135-00	Throttle/Pedal Position Sensor /Switch A / B Voltage Correlation - No sub type information	■ Throttle pedal position sensor circuit 1 and 2 short circuit to ground, short circuit to power, open circuit	■ Refer to the electrical circuit diagrams and check throttle pedal position sensor circuit 1 and 2 for short circuit to ground, short circuit to power, open circuit
P2135-09	Throttle/Pedal Position Sensor /Switch A / B Voltage Correlation - Component Failures	■ Throttle pedal position sensor circuit 1 and 2 short circuit to ground, short circuit to power, open circuit	■ Refer to the electrical circuit diagrams and check throttle pedal position sensor circuit 1 and 2 for short circuit to ground, short circuit to power, open circuit

P2138-64	Throttle/Pedal Position Sensor /Switch D / E Voltage Correlation - No sub type information	■ Accelerator pedal position sensor circuit 1 and 2 short circuit to ground, short circuit to power, open circuit	Refer to the electrical circuit diagrams and check accelerator pedal position sensor circuit 1 and 2 for short circuit to ground, short circuit to power, open circuit
P2169-13	Exhaust Pressure Regulator Vent Solenoid Control Circuit / Open - Circuit open	**NOTE:** Jaguar - Circuit ACTIVE_EXT_VALVE - ■ Active exhaust solenoid valve circuit open circuit	■ Refer to the electrical circuit diagrams and check active exhaust solenoid valve circuit for open circuit
P2170-11	Exhaust Pressure Regulator Vent Solenoid Control Circuit Low - Circuit short to ground	**NOTE:** Jaguar - Circuit ACTIVE_EXT_VALVE - ■ Active exhaust solenoid valve circuit short circuit to ground	■ Refer to the electrical circuit diagrams and check active exhaust solenoid valve circuit for short circuit to ground
P2171-12	Exhaust Pressure Regulator Vent Solenoid Control Circuit high - Circuit short to battery	**NOTE:** Jaguar - Circuit ACTIVE_EXT_VALVE - ■ Active exhaust solenoid valve circuit short circuit to power	■ Refer to the electrical circuit diagrams and check active exhaust solenoid valve circuit for short circuit to power

P2183-23	Engine Coolant Temperature Sensor 2 Circuit Range /Performance - Signal stuck low	**NOTE:** - Circuit COOLANT_TEMP_SENSOR_2 - ■ Engine coolant temperature sensor 2 circuit high resistance, open circuit ■ Engine coolant temperature sensor 2 failure	■ Refer to the electrical circuit diagrams and check engine coolant temperature sensor 2 circuit for high resistance, open circuit ■ Check and install a new engine coolant temperature sensor 2 as required. Refer to the warranty policy and procedures manual, or determine if any prior approval programme is in operation, prior to the installation of a new module/component
P2183-24	Engine Coolant Temperature Sensor 2 Circuit Range /Performance - Signal stuck high	**NOTE:** - Circuit COOLANT_TEMP_SENSOR_2 - ■ Engine coolant temperature sensor 2 circuit short circuit to power ■ Engine coolant temperature sensor 2 failure	■ Refer to the electrical circuit diagrams and check engine coolant temperature sensor 2 circuit for short circuit to power ■ Check and install a new engine coolant temperature sensor 2 as required. Refer to the warranty policy and procedures manual, or determine if any prior approval programme is in operation, prior to the installation of a new module/component
P2183-29	Engine Coolant Temperature Sensor 2 Circuit Range /Performance - Signal invalid	**NOTE:** - Circuit COOLANT_TEMP_SENSOR_2 - ■ Engine coolant temperature sensor 2 circuit high resistance, open circuit, short circuit to ground, short circuit to power	■ Refer to the electrical circuit diagrams and check engine coolant temperature sensor 2 circuit for high resistance, open circuit, short circuit to ground, short circuit to power ■ Check and install a new engine coolant temperature sensor 2 as required. Refer to the warranty policy and procedures manual, or determine if any

		■ Engine coolant temperature sensor 2 failure	prior approval programme is in operation, prior to the installation of a new module/component
P2184-16	Engine Coolant Temperature Sensor 2 Circuit Low - Circuit voltage below threshold	**NOTE:** - Circuit COOLANT_TEMP_SENSOR_2 - ■ Engine coolant temperature sensor 2 circuit high resistance, open circuit, short circuit to ground ■ Engine coolant temperature sensor 2 failure	■ Refer to the electrical circuit diagrams and check engine coolant temperature sensor 2 circuit for high resistance, open circuit, short circuit to ground ■ Check and install a new engine coolant temperature sensor 2 as required. Refer to the warranty policy and procedures manual, or determine if any prior approval programme is in operation, prior to the installation of a new module/component
P2185-17	Engine Coolant Temperature Sensor 2 Circuit High - Circuit voltage above threshold	**NOTE:** - Circuit COOLANT_TEMP_SENSOR_2 - ■ Ignition turned on with an ambient temperature of below -40c ■ Engine coolant temperature sensor 2 circuit short circuit to power ■ Engine coolant temperature sensor 2 failure	■ Clear the DTC and re-test ■ Refer to the electrical circuit diagrams and check engine coolant temperature sensor 2 circuit for short circuit to power ■ Check and install a new engine coolant temperature sensor 2 as required. Refer to the warranty policy and procedures manual, or determine if any prior approval programme is in operation, prior to the installation of a new module/component
P219A-00	Bank 1 Air-Fuel Ratio	**NOTE:**	■ Using the manufacturer approved diagnostic system check the engine control module for oxygen sensor related DTCs and refer to the relevant

		Imbalance - No sub type information	Post catalyst oxygen sensor-odd & Pre catalyst oxygen sensor-odd ■ Other oxygen sensor related DTCs ■ Air leak in the exhaust system between post catalyst oxygen sensor-odd and catalyst ■ Air leak in the exhaust system between catalyst and exhaust manifold flange ■ Air leak in the exhaust system between pre catalyst oxygen sensor-odd and post catalyst oxygen sensor-odd ■ Air leak around pre catalyst oxygen sensor-odd ■ Air leaks within the intake system ■ Air leak around fuel injector(s) bank 1 ■ Air leak around spark plug(s) bank 1 ■ Low fuel pressure, fuel injector(s) leak, fuel system leak bank 1 ■ Camshaft position actuator sticking ■ Airpath blockage between throttle butterfly and inlet poppet valve ■ Post catalyst oxygen sensor-odd failure ■ Cylinder head gasket failure	DTC index. Record any available freeze frame data ■ Check for air leaks in the exhaust system between post catalyst oxygen sensor-odd and catalyst ■ Check for air leaks in the exhaust system between catalyst and exhaust manifold flange ■ Check for air leaks in the exhaust system between pre catalyst oxygen sensor-odd and post catalyst oxygen sensor-odd ■ Check for air leaks around pre catalyst oxygen sensor-odd ■ Check for air leaks within the intake system ■ Check for air leak around fuel injector (s) bank 1 ■ Check for air leak around spark plug(s) bank 1 ■ Check for low fuel pressure, fuel injector (s) leak, fuel system leak bank 1 ■ Check for camshaft position actuator sticking ■ Check for airpath blockage between throttle butterfly and inlet poppet valve ■ Carry out cylinder compression check. Record the results ■ Check and install a post catalyst oxygen sensor-odd as required. Refer

			to the warranty policy and procedures manual, or determine if any prior approval programme is in operation, prior to the installation of a new module /component ■ Using the manufacturer approved diagnostic system clear DTC and retest
P219B-00	Bank 2 Air-Fuel Ratio Imbalance - No sub type information	**NOTE:** Post catalyst oxygen sensor-even & Pre catalyst oxygen sensor-even ■ Other oxygen sensor related DTCs ■ Air leak in the exhaust system between post catalyst oxygen sensor-even and catalyst ■ Air leak in the exhaust system between catalyst and exhaust manifold flange ■ Air leak in the exhaust system between pre catalyst oxygen sensor-even and post catalyst oxygen sensor-even ■ Air leak around pre catalyst oxygen sensor-even ■ Air leaks within the intake system ■ Air leak around fuel injector(s) bank 2 ■ Air leak around spark plug(s) bank 2 ■ Low fuel pressure, fuel injector(s) leak, fuel system leak bank 2 ■ Camshaft position actuator sticking	■ Using the manufacturer approved diagnostic system check the engine control module for oxygen sensor related DTCs and refer to the relevant DTC index. Record any available freeze frame data ■ Check for air leaks in the exhaust system between post catalyst oxygen sensor-even and catalyst ■ Check for air leaks in the exhaust system between catalyst and exhaust manifold flange ■ Check for air leaks in the exhaust system between pre catalyst oxygen sensor-even and post catalyst oxygen sensor-even ■ Check for air leaks around pre catalyst oxygen sensor-even ■ Check for air leaks within the intake system ■ Check for air leak around fuel injector (s) bank 2

			■ Airpath blockage between throttle butterfly and inlet poppet valve ■ Post catalyst oxygen sensor-even failure ■ Cylinder head gasket failure	■ Check for air leak around spark plug(s) bank 2 ■ Check for low fuel pressure, fuel injector (s) leak, fuel system leak bank 2 ■ Check for camshaft position actuator sticking ■ Check for airpath blockage between throttle butterfly and inlet poppet valve ■ Carry out cylinder compression check. Record the results ■ Check and install a post catalyst oxygen sensor-even as required. Refer to the warranty policy and procedures manual, or determine if any prior approval programme is in operation, prior to the installation of a new module /component ■ Using the manufacturer approved diagnostic system clear DTC and retest
P2228-00	Barometric Pressure Circuit Low - No sub type information	■ Barometric pressure sensor failure(internal engine control module failure)	■ Using the manufacturer approved diagnostic system check datalogger signal, Barometric Pressure Sensor Voltage (0x035A) ■ Check and install a new engine control module as required. Refer to the warranty policy and procedures manual, or determine if any prior approval programme is in operation, prior to the installation of a new module /component	

P2229-00	Barometric Pressure Circuit Low - No sub type information	■ Barometric pressure sensor failure(internal engine control module failure)	■ Using the manufacturer approved diagnostic system check datalogger signal, Barometric Pressure Sensor Voltage (0x035A) ■ Check and install a new engine control module as required. Refer to the warranty policy and procedures manual, or determine if any prior approval programme is in operation, prior to the installation of a new module /component
P2279-00	Intake Air System Leak - No sub type information	■ Part load breather pipe disconnected ■ Brake vacuum pipe disconnected ■ Excessive intake air leak	■ Check for related DTCs ■ Check part load breather pipe for leaks or disconnected ■ Check brake vacuum pipe for leaks or disconnected ■ Check intake air system for leaks
P2300-11	Ignition Coil A Primary Control Circuit Low - Circuit short to ground	△ NOTE: - Circuit IGNITION_1A - ■ Ignition coil 1 circuit short circuit to ground	■ Refer to the electrical circuit diagrams and check ignition coil 1 circuit for short circuit to ground
P2301-12	Ignition Coil A Primary Control Circuit	△ NOTE:	■ Refer to the electrical circuit diagrams and check ignition coil 1 circuit for short circuit to power

	High - Circuit short to battery	- Circuit IGNITION_1A - ■ Ignition coil 1 circuit short circuit to power	
P2303-11	Ignition Coil B Primary Control Circuit Low - Circuit short to ground	NOTE: - Circuit IGNITION_1B - ■ Ignition coil 2 circuit short circuit to ground	■ Refer to the electrical circuit diagrams and check ignition coil 2 circuit for short circuit to ground
P2304-12	Ignition Coil B Primary Control Circuit High - Circuit short to battery	NOTE: - Circuit IGNITION_1B - ■ Ignition coil 2 circuit short circuit to power	■ Refer to the electrical circuit diagrams and check ignition coil 2 circuit for short circuit to power
P2306-11	Ignition Coil C Primary Control Circuit Low - Circuit short to ground	NOTE: - Circuit IGNITION_2A - ■ Ignition coil 3 circuit short circuit to ground	■ Refer to the electrical circuit diagrams and check ignition coil 3 circuit for short circuit to ground
P2307-12	Ignition Coil C Primary	NOTE:	

	Control Circuit High - Circuit short to battery	- Circuit IGNITION_2A - ■ Ignition coil 3 circuit short circuit to power	■ Refer to the electrical circuit diagrams and check ignition coil 3 circuit for short circuit to power
P2309-11	Ignition Coil D Primary Control Circuit Low - Circuit short to ground	NOTE: - Circuit IGNITION_2B - ■ Ignition coil 4 circuit short circuit to ground	■ Refer to the electrical circuit diagrams and check ignition coil 4 circuit for short circuit to ground
P2310-12	Ignition Coil D Primary Control Circuit High - Circuit short to battery	NOTE: - Circuit IGNITION_2B - ■ Ignition coil 4 circuit short circuit to power	■ Refer to the electrical circuit diagrams and check ignition coil 4 circuit for short circuit to power
P2312-11	Ignition Coil E Primary Control Circuit Low - Circuit short to ground	NOTE: - Circuit IGNITION_3A - ■ Ignition coil 5 circuit short circuit to ground	■ Refer to the electrical circuit diagrams and check ignition coil 5 circuit for short circuit to ground
P2313-12	Ignition Coil E Primary	NOTE:	

	Control Circuit High - Circuit short to battery	- Circuit IGNITION_3A - ■ Ignition coil 5 circuit short circuit to power	■ Refer to the electrical circuit diagrams and check ignition coil 5 circuit for short circuit to power
P2315-11	Ignition Coil F Primary Control Circuit Low - Circuit short to ground	NOTE: - Circuit IGNITION_3B - ■ Ignition coil 6 circuit short circuit to ground	■ Refer to the electrical circuit diagrams and check ignition coil 6 circuit for short circuit to ground
P2316-12	Ignition Coil F Primary Control Circuit High - Circuit short to battery	NOTE: - Circuit IGNITION_3B - ■ Ignition coil 6 circuit short circuit to power	■ Refer to the electrical circuit diagrams and check ignition coil 6 circuit for short circuit to power
P2318-11	Ignition Coil G Primary Control Circuit Low - Circuit short to ground	NOTE: - Circuit IGNITION_4A - ■ Ignition coil 7 circuit short circuit to ground	■ Refer to the electrical circuit diagrams and check ignition coil 7 circuit for short circuit to ground
P2319-	Ignition Coil G	NOTE:	

12	Primary Control Circuit High - Circuit short to battery	- Circuit IGNITION_4A - ■ Ignition coil 7 circuit short circuit to power	■ Refer to the electrical circuit diagrams and check ignition coil 7 circuit for short circuit to power
P2321-11	Ignition Coil H Primary Control Circuit Low - Circuit short to ground	**NOTE:** - Circuit IGNITION_4B - ■ Ignition coil 8 circuit short circuit to ground	■ Refer to the electrical circuit diagrams and check ignition coil 8 circuit for short circuit to ground
P2322-12	Ignition Coil H Primary Control Circuit High - Circuit short to battery	**NOTE:** - Circuit IGNITION_4B - ■ Ignition coil 8 circuit short circuit to power	■ Refer to the electrical circuit diagrams and check ignition coil 8 circuit for short circuit to power
P2401-00	Evaporative Emission System Leak Detection Pump Control Circuit Low - No sub type information	■ Diagnostic module tank leakage pump circuit short circuit to ground	**NOTES:** ■ If purge valve related DTCs are also set, perform the relevant corrective action(s) first. ■ It is not possible to replicate the failure event as certain entry conditions must be satisfied (for more information, refer to

				section 303-13: Evaporative Emissions / Description and Operation). To verify the customer concern, perform routine Evaporative System Diagnostic Check and re-read DTCs. ■ Refer to the electrical circuit diagrams and check the diagnostic module tank leakage pump circuit for short circuit to ground
	P2402-00	Evaporative Emission System Leak Detection Pump Control Circuit High - No sub type information	■ Diagnostic module tank leakage pump circuit short circuit to power	**NOTES:** ■ If purge valve related DTCs are also set, perform the relevant corrective action(s) first. ■ It is not possible to replicate the failure event as certain entry conditions must be satisfied (for more information, refer to section 303-13: Evaporative Emissions / Description and Operation). To verify the customer concern, perform routine Evaporative System Diagnostic Check and re-read DTCs.

			■ Refer to the electrical circuit diagrams and check the diagnostic module tank leakage pump circuit for short circuit to power
P2404-29	Evaporative Emission System Leak Detection Pump Sense Circuit Range /Performance - Signal invalid	**NOTE:** - Circuit FUEL_LEAK_PUMP - ■ Diagnostic module tank leakage failure	■ Check and install a new diagnostic module tank leakage as required. Refer to the warranty policy and procedures manual, or determine if any prior approval programme is in operation, prior to the installation of a new module /component
P2404-2F	Evaporative Emission System Leak Detection Pump Sense Circuit Range /Performance - Signal erratic	**NOTE:** - Circuit FUEL_LEAK_PUMP - ■ Diagnostic module tank leakage failure	■ Check and install a new diagnostic module tank leakage as required. Refer to the warranty policy and procedures manual, or determine if any prior approval programme is in operation, prior to the installation of a new module /component
P2405-00	Evaporative Emission System Leak Detection Pump Sense Circuit Low - No sub type information	■ Diagnostic module tank leakage module internal failure	**NOTES:** ■ If purge valve related DTCs are also set, perform the relevant corrective action(s) first. ■ It is not possible to replicate the failure event as certain entry conditions must be satisfied (for more information, refer to section 303-13: Evaporative

			Emissions / Description and Operation). To verify the customer concern, perform routine Evaporative System Diagnostic Check and re-read DTCs. ■ Install a new diagnostic module tank leakage module as necessary
P2406-00	Evaporative Emission System Leak Detection Pump Sense Circuit High - No sub type information	■ Diagnostic module tank leakage module internal failure	△ NOTES: ■ If purge valve related DTCs are also set, perform the relevant corrective action(s) first. ■ It is not possible to replicate the failure event as certain entry conditions must be satisfied (for more information, refer to section 303-13: Evaporative Emissions / Description and Operation). To verify the customer concern, perform routine Evaporative System Diagnostic Check and re-read DTCs. ■ Install a new diagnostic module tank leakage module as necessary

P240A-00	Evaporative Emission System Leak Detection Pump Heater Circuit / Open - No sub type information	■ Diagnostic module tank leakage heater circuit open circuit, high resistance	**NOTES:** ■ If purge valve related DTCs are also set, perform the relevant corrective action(s) first. ■ It is not possible to replicate the failure event as certain entry conditions must be satisfied (for more information, refer to section 303-13: Evaporative Emissions / Description and Operation). To verify the customer concern, perform routine Evaporative System Diagnostic Check and re-read DTCs. ■ Refer to the electrical circuit diagrams and check the diagnostic module tank leakage heater circuit for open circuit, high resistance
P240B-00	Evaporative Emission System Leak Detection Pump Heater Circuit Low - No sub type information	■ Diagnostic module tank leakage heater circuit short circuit to ground	**NOTES:** ■ If purge valve related DTCs are also set, perform the relevant corrective action(s) first. ■ It is not possible to replicate the failure event as certain entry conditions must be satisfied (for more information, refer to section 303-13: Evaporative

				Emissions / Description and Operation). To verify the customer concern, perform routine Evaporative System Diagnostic Check and re-read DTCs. ■ Refer to the electrical circuit diagrams and check the diagnostic module tank leakage heater circuit for short circuit to ground
	P240C-00	Evaporative Emission System Leak Detection Pump Heater Circuit High - No sub type information	■ Diagnostic module tank leakage heater circuit short circuit to power	△ NOTES: ■ If purge valve related DTCs are also set, perform the relevant corrective action(s) first. ■ It is not possible to replicate the failure event as certain entry conditions must be satisfied (for more information, refer to section 303-13: Evaporative Emissions / Description and Operation). To verify the customer concern, perform routine Evaporative System Diagnostic Check and re-read DTCs. ■ Refer to the electrical circuit diagrams and check the diagnostic module tank

			leakage heater circuit for short circuit to power
P2450-00	Evaporative Emission Control System Switching Valve Performance /Stuck Open - No sub type information	**NOTES:** - Circuit COV - LR - Circuit CHANGE OVER VALVE - Diagnostic module tank leakage failure	Check and install a new diagnostic module tank leakage as required. Refer to the warranty policy and procedures manual, or determine if any prior approval programme is in operation, prior to the installation of a new module /component
P2451-00	Evaporative Emission Control System Switching Valve Performance /Stuck Closed - No sub type information	**NOTES:** - Circuit COV - LR - Circuit CHANGE OVER VALVE - Diagnostic module tank leakage failure	Check and install a new diagnostic module tank leakage as required. Refer to the warranty policy and procedures manual, or determine if any prior approval programme is in operation, prior to the installation of a new module /component
P250C-23	Engine Oil Level Sensor Circuit Low - Signal stuck low	**NOTE:** - Circuit OIL_QUALITY_SENSOR - Oil temperature level sensor circuit short circuit to ground Oil temperature level sensor failure	Using the manufacturer approved diagnostic system check datalogger signal, Sump Oil Temperature - Measured (0x03F3) Refer to the electrical circuit diagrams and check oil temperature level sensor circuit for short circuit to ground Check and install a new oil temperature level sensor as required. Refer to the warranty policy and procedures

			manual, or determine if any prior approval programme is in operation, prior to the installation of a new module /component
P250D-24	Engine Oil Level Sensor Circuit High - Signal stuck high	**NOTE:** - Circuit OIL_QUALITY_SENSOR - ■ Oil temperature level sensor circuit short circuit to power ■ Oil temperature level sensor failure	■ Using the manufacturer approved diagnostic system check datalogger signal, Sump Oil Temperature - Measured (0x03F3) ■ Refer to the electrical circuit diagrams and check oil temperature level sensor circuit for short circuit to power ■ Check and install a new oil temperature level sensor as required. Refer to the warranty policy and procedures manual, or determine if any prior approval programme is in operation, prior to the installation of a new module /component
P2544-64	Torque Management Request Input Signal A - Signal plausibility failure	■ Inappropriate request from anti-lock braking system	■ Check for related DTCs within anti-lock braking system module and refer to the relevant DTC index ■ Using the manufacturer approved diagnostic system, complete a CAN network integrity test
P2544-92	Torque Management Request Input Signal A - Performance or	■ Inappropriate request from anti-lock braking system	■ Check for related DTCs within anti-lock braking system module and refer to the relevant DTC index

	incorrect operation		■ Using the manufacturer approved diagnostic system, complete a CAN network integrity test
P2600-13	Coolant Pump A Control Circuit / Open - Circuit open	**NOTE:** XF - Circuit IC_COOLANT_PMP_CTRL - XK - Circuit INT_WATERPUMP_RLY - ■ Coolant pump A control circuit open circuit	■ Refer to the electrical circuit diagrams and check coolant pump A control circuit for open circuit
P2601-00	Coolant Pump Control Circuit Range /Performance - No sub type information	**NOTE:** XF - Circuit IC_COOLANT_PMP_CTRL - XK - Circuit INT_WATERPUMP_RLY - ■ Coolant level low ■ Blocked cooling system ■ Coolant pump A control circuit open circuit ■ Coolant pump A failure	■ Check coolant level and top up as required ■ Check the cooling system for blockages or trapped hoses ■ Refer to the electrical circuit diagrams and check coolant pump A control circuit for open circuit ■ Check and install a new coolant pump A as required. Refer to the warranty policy and procedures manual, or determine if any prior approval programme is in operation, prior to the installation of a new module/component
P2602-11	Coolant Pump A Control	**NOTE:**	■ Refer to the electrical circuit diagrams and check coolant pump A control circuit for short circuit to ground

	Circuit Low - Circuit short to ground	XF - Circuit IC_COOLANT_PMP_CTRL - XK - Circuit INT_WATERPUMP_RLY - ■ Coolant pump A control circuit short circuit to ground	
P2603-12	Coolant Pump A Control Circuit High - Circuit short to battery	△ NOTE: XF - Circuit IC_COOLANT_PMP_CTRL - XK - Circuit INT_WATERPUMP_RLY - ■ Coolant pump A control circuit short circuit to power	■ Refer to the electrical circuit diagrams and check coolant pump A control circuit for short circuit to power
P2610-00	ECM/PCM Internal Engine Off Timer Performance - No sub type information	■ Instrument cluster fault ■ Central junction box fault ■ CAN network error	■ Check for DTCs related to any of the components listed and refer to relevant DTC index ■ Using the manufacturer approved diagnostic system, complete a CAN network integrity test
P2610-84	ECM/PCM Engine Off Timer Performance - Signal below allowable range	■ Instrument cluster fault ■ Central junction box fault ■ Engine coolant temperature sensor fault ■ Ambient temperature sensor fault ■ Low battery voltage ■ CAN network error	■ Check for DTCs related to any of the components listed and refer to relevant DTC index ■ Refer to the electrical circuit diagrams and check engine coolant temperature sensor circuit for short circuit to ground, short circuit to power, open circuit

			■ Refer to the electrical circuit diagrams and check ambient air temperature sensor circuit for short circuit to ground, short circuit to power, open circuit ■ Check the battery voltage, repair as required ■ Using the manufacturer approved diagnostic system, complete a CAN network integrity test
P2610-85	ECM/PCM Engine Off Timer Performance - Signal above allowable range	■ Instrument cluster fault ■ Central junction box fault ■ Engine coolant temperature sensor fault ■ Ambient temperature sensor fault ■ Low battery voltage ■ CAN network error	■ Check for DTCs related to any of the components listed and refer to relevant DTC index ■ Refer to the electrical circuit diagrams and check engine coolant temperature sensor circuit for short circuit to ground, short circuit to power, open circuit ■ Refer to the electrical circuit diagrams and check ambient air temperature sensor circuit for short circuit to ground, short circuit to power, open circuit ■ Check the battery voltage, repair as required ■ Using the manufacturer approved diagnostic system, complete a CAN network integrity test
P2610-	ECM/PCM	■ Instrument cluster fault	

	87	Internal Engine Off Timer Performance - Missing message	■ Central junction box fault ■ Engine coolant temperature sensor fault ■ Ambient temperature sensor fault ■ CAN network error	■ Check for DTCs related to any of the components listed, and refer to relevant DTC index ■ Refer to the electrical circuit diagrams and check engine coolant temperature sensor circuit for short circuit to ground, short circuit to power, open circuit ■ Refer to the electrical circuit diagrams and check ambient air temperature sensor circuit for short circuit to ground, short circuit to power, open circuit ■ Using the manufacturer approved diagnostic system, complete a CAN network integrity test
	P2772-64	Four Wheel Drive (4WD) Low Switch Circuit Range /Performance - Signal plausibility failure	■ Missing data in the car configuration file ■ Vehicle speed related failure ■ Gearbox output shaft speed related failure	■ Using the manufacturer approved diagnostic system check and up-date the car configuration file as required. Clear the diagnostic trouble code and retest ■ Using the manufacturer approved diagnostic system check for vehicle speed related DTCs and refer to the relevant DTC index ■ Using the manufacturer approved diagnostic system check for gearbox output shaft speed related DTCs and refer to the relevant DTC index ■ Clear the diagnostic trouble code and re-test

U0001-88	High Speed CAN Communication Bus - Bus off	**NOTE:** - Circuit HS_CAN_NEG - HS_CAN_POS - ■ High speed CAN bus circuit, short circuit to ground ■ High speed CAN bus circuit, short circuit to power ■ High speed CAN bus, open circuit	■ Refer to the electrical circuit diagrams and check CAN network for short circuit to ground, short circuit to power, open circuit ■ Using the manufacturer approved diagnostic system, carry out network integrity test
U0101-00	Lost Communication with TCM - No sub type information	■ CAN link engine control module/transmission control module network malfunction ■ Transmission control module failure	■ Using the manufacturer approved diagnostic system, check transmission control module for DTCs and refer to the relevant DTC index ■ Using the manufacturer approved diagnostic system, complete a CAN network integrity test ■ Refer to the electrical circuit diagrams and check transmission control module power and ground circuit for open circuit ■ Check CAN harness to transmission control module, repair as necessary
U0102-00	Lost Communication with Transfer Case Control Module - No sub type information	■ CAN harness link between engine control module and transfer box control module network malfunction	■ Using the manufacturer approved diagnostic system, check transfer box control module for DTCs and refer to the relevant DTC index ■ Using the manufacturer approved diagnostic system, complete a CAN network integrity test

			■ Refer to the electrical circuit diagrams and check transfer box control module power and ground circuits for open circuit ■ Check CAN harness between engine control module and transfer box control module, repair as necessary
U0104-00	Lost Communication With Cruise Control Module - No sub type information	■ Vehicle configured for speed control, but speed control module is not installed ■ CAN Link engine control module/speed control module network malfunction ■ Speed control module power or ground circuit, open circuit	■ Check vehicle has correct speed control module installed ■ Using the manufacturer approved diagnostic system, check speed control module, anti-lock braking system module for DTCs and refer to the relevant DTC index ■ Using the manufacturer approved diagnostic system, complete a CAN network integrity test ■ Refer to the electrical circuit diagrams and check speed control module power and ground circuit for open circuit ■ Check CAN harness to speed control module, repair as necessary
U0121-00	Lost Communication With Anti-lock Braking System (ABS) Control Module - No sub type information	■ CAN Link engine control module/anti-lock braking system module network malfunction ■ Anti-lock braking system module power or ground circuit, open circuit	■ Using the manufacturer approved diagnostic system, check anti-lock braking system module for DTCs and refer to the relevant DTC index ■ Using the manufacturer approved diagnostic system, complete a CAN network integrity test

			■ Refer to the electrical circuit diagrams and check anti-lock braking system module power and ground circuit for open circuit ■ Check CAN harness to anti-lock braking system module, repair as necessary
U0126-00	Lost Communication With Steering Angle Sensor Module - No sub type information	■ CAN harness link between engine control module and steering angle sensor network malfunction	■ Using the manufacturer approved diagnostic system, steering angle sensor for DTCs and refer to the relevant DTC index ■ Using the manufacturer approved diagnostic system, complete a CAN network integrity test ■ Refer to the electrical circuit diagrams and check steering angle sensor power and ground circuits for open circuit ■ Check CAN harness between engine control module and steering angle sensor, repair as necessary
U0128-00	Lost Communication With Park Brake Control Module - No sub type information	■ CAN Link engine control module/electronic parking brake signal missing network malfunction	■ Refer to the electrical circuit diagrams and check power and ground supplies to electronic parking brake ■ Using the manufacturer approved diagnostic system, complete a CAN network integrity test
U0132-00	Lost Communication with	■ CAN link/suspension control module network malfunction	■ Refer to the electrical circuit diagrams and check power and ground supplies to suspension control module

	Suspension Control Module A - No sub type information		■ Using the manufacturer approved diagnostic system, complete a CAN network integrity test
U0133-00	Lost Communication With Active Roll Control Module - No sub type information	■ CAN harness link between engine control module and active roll control module network malfunction	■ Using the manufacturer approved diagnostic system, check active roll control module for DTCs and refer to the relevant DTC index ■ Using the manufacturer approved diagnostic system, complete a CAN network integrity test ■ Refer to the electrical circuit diagrams and check active roll control module power and ground circuits for open circuit ■ Check CAN harness between engine control module and active roll control module, repair as necessary
U0138-00	Lost Communication with All Terrain Control Module - No sub type information	■ CAN harness link between engine control module and center console switch pack network malfunction	■ Using the manufacturer approved diagnostic system, check center console switch pack for DTCs and refer to the relevant DTC index ■ Using the manufacturer approved diagnostic system, complete a CAN network integrity test ■ Refer to the electrical circuit diagrams and check center console switch pack power and ground circuits for open circuit

			■ Check CAN harness between engine control module and center console switch pack, repair as necessary
U0140-00	Lost Communication With Body Control Module - No sub type information	■ CAN harness link between engine control module and central junction box network malfunction	■ Using the manufacturer approved diagnostic system, check central junction box for DTCs and refer to the relevant DTC index ■ Using the manufacturer approved diagnostic system, complete a CAN network integrity test ■ Refer to the electrical circuit diagrams and check central junction box power and ground circuits for open circuit ■ Check CAN harness between engine control module and central junction box, repair as necessary
U0151-00	Lost Communication with Restraints Control Module - No sub type information	■ Lost communication with restraints control module over CAN or hardwired link	■ Refer to the electrical circuit diagrams and check power and ground supplies to restraints control module ■ Using the manufacturer approved diagnostic system, complete a CAN network integrity test
U0151-87	Lost Communication with Restraints Control Module - Missing message	■ Lost communication due to restraints control module fault	■ Check restraints control module for associated DTCs and refer to relevant DTC index ■ Refer to the electrical circuit diagrams and check power and ground supplies to restraints control module

			■ Using the manufacturer approved diagnostic system, complete a CAN network integrity test
U0155-00	Lost Communication with Instrument Panel Cluster (IPC) - No sub type information	■ CAN link between engine control module and instrument cluster fault	■ Refer to the electrical circuit diagrams and check power and ground supplies to instrument cluster ■ Using the manufacturer approved diagnostic system, complete a CAN network integrity test
U0167-00	Lost Communication with Vehicle Immobilizer Control Module - No sub type information	■ Security challenge response timeout ■ Battery fault	■ Refer to the electrical circuit diagrams and check power and ground supplies to the electric steering column lock ■ Check for related CAN DTCs and refer to the relevant DTC index ■ Ensure the battery is in a fully charged and serviceable condition. Refer to the battery care manual and the relevant sections of the workshop manual ■ Using the manufacturer approved diagnostic system, complete a CAN network integrity test
U0300-00	Internal Control Module Software Incompatibility - No sub type information	■ Engine control module has incorrect software installed ■ The engine control module is in expulsion mode. An incorrect specification engine control module has been installed to the vehicle	■ Check and install the correct engine control module software ■ Check and install the correct engine control module as required. Refer to the warranty policy and procedures manual, or determine if any prior approval programme is in operation,

			prior to the installation of a new module /component
U0402-00	Invalid Data Received From Transmission Control Module - No sub type information	■ Transmission engine control module request corruption	■ Using the manufacturer approved diagnostic system, check transmission control module, for DTCs and refer to the relevant DTC index ■ Using the manufacturer approved diagnostic system, complete a CAN network integrity test ■ Refer to the electrical circuit diagrams and check high speed CAN bus circuit for short circuit, open circuit
U0402-08	Invalid Data Received from TCM - Bus signal / message failures	■ Transmission engine control module request corruption ■ High speed CAN bus circuit failure, short, open circuit	■ Using the manufacturer approved diagnostic system, check transmission control module, for DTCs and refer to the relevant DTC index ■ Using the manufacturer approved diagnostic system, complete a CAN network integrity test ■ Refer to the electrical circuit diagrams and check high speed CAN bus circuit for short circuit, open circuit
U0402-64	Invalid Data Received from TCM - Signal plausibility failure	■ Transmission to engine control module request corruption ■ High speed CAN bus signal corruption	■ Using the manufacturer approved diagnostic system, check transmission control module, for DTCs and refer to the relevant DTC index

			■ Using the manufacturer approved diagnostic system, complete a CAN network integrity test ■ Refer to the electrical circuit diagrams and check high speed CAN bus circuit for short circuit, open circuit
U0402-82	Invalid Data Received from TCM - Alive / sequence counter incorrect / not updated	■ Transmission control module shaft-speed faults	■ Using the manufacturer approved diagnostic system, check transmission control module, for DTCs and refer to the relevant DTC index
U0402-83	Invalid Data Received from TCM - Value of signal protection calculation incorrect	■ Transmission control module shaft-speed faults	■ Using the manufacturer approved diagnostic system, check transmission control module, for DTCs and refer to the relevant DTC index
U0415-00	Invalid Data Received From Anti-lock Braking System (ABS) Control Module - No sub type information	■ Electronic throttle unit, throttle position sensor 1 failure ■ Electronic throttle unit, throttle position sensor 2 failure ■ Electronic throttle unit harness short, open circuit	■ Using the manufacturer approved diagnostic system, check for electronic throttle unit DTCs repair as necessary ■ Refer to the electrical circuit diagrams and check electronic unit harness for short circuit, open circuit ■ Refer to the warranty policy and procedures manual, or determine if any prior approval programme is in operation, prior to the installation of a new module/component

U0415-64	Invalid Data Received From Anti-lock Braking System (ABS) Control Module - Signal plausibility failure	■ Invalid request from anti-lock braking system ■ Torque up request higher than expected from anti-lock braking system	■ Using the manufacturer approved diagnostic system, check anti-lock braking system, for DTCs and refer to the relevant DTC index ■ Refer to the electrical circuit diagrams and check high speed CAN bus circuit for short circuit, open circuit
U0415-67	Invalid Data Received From Anti-lock Braking System (ABS) Control Module - Signal incorrect after event	■ Torque up request higher than expected from anti-lock braking system	■ Using the manufacturer approved diagnostic system, check anti-lock braking system, for DTCs and refer to the relevant DTC index ■ Refer to the electrical circuit diagrams and check high speed CAN bus circuit for short circuit, open circuit
U0426-00	Invalid Data Received From Vehicle Immobilizer Control Module - No sub type information	■ Security code mis-match ■ This DTC will be logged if the encrypted data exchange does not match between engine control module and the instrument cluster or central junction box	■ Check CAN network between engine control module, instrument cluster and central junction box ■ Refer to the electrical circuit diagrams and check power and ground circuit to engine control module and instrument cluster ■ Check correct engine control module and instrument cluster installed ■ Re-synchronise ID by re-configuring the engine control module and instrument cluster as new modules

U0447-81	Invalid Data Received From Gateway "A" - Invalid serial data received	■ The LIN to high speed CAN gateway has informed the engine control module of a failure	■ This DTC has been inhibited in the engine control module, as the LIN bus flag is set during normal operation

2012.0 RANGE ROVER (LM), 100-00

GENERAL INFORMATION

DESCRIPTION AND OPERATION

HEADLAMP CONTROL MODULE A (HCM)

CAUTION:

Diagnosis by substitution from a donor vehicle is **NOT** acceptable. Substitution of control modules does not guarantee confirmation of a fault, and may also cause additional faults in the vehicle being tested and/or the donor vehicle

NOTES:

- If the control module or a component is suspect and the vehicle remains under manufacturer warranty, refer to the warranty policy and procedures manual, or determine if any prior approval programme is in operation, prior to the installation of a new module/component
- Generic scan tools may not read the codes listed, or may read only 5-digit codes. Match the 5 digits from the scan tool to the first 5 digits of the 7-digit code listed to identify the fault (the last 2 digits give extra information read by the manufacturer-approved diagnostic system)
- When performing voltage or resistance tests, always use a digital multimeter accurate to three decimal places and with a current calibration certificate. When testing resistance, always take the resistance of the digital multimeter leads into account
- Check and rectify basic faults before beginning diagnostic routines involving pinpoint tests
- Inspect connectors for signs of water ingress, and pins for damage and/or corrosion
- If diagnostic trouble codes are recorded and, after performing the pinpoint tests, a fault is not present, an intermittent concern may be the cause. Always check for loose connections and corroded terminals
- Where an 'on demand self-test' is referred to, this can be accessed via the 'diagnostic trouble code monitor' tab on the manufacturers approved diagnostic system
- Check DDW for open campaigns. Refer to the corresponding bulletins and SSMs which may be valid for the specific customer complaint and carry out the recommendations as required

The table below lists all Diagnostic Trouble Codes (DTCs) that could be logged in the Headlamp Control Module A, for additional Diagnosis and Testing information refer to the relevant Diagnosis and Testing Section. For additional information, refer to: (417-01 Exterior Lighting)

Headlamp Leveling (Diagnosis and Testing),
Headlamps (Diagnosis and Testing).

DTC	DESCRIPTION	POSSIBLE CAUSES	ACTION
B1041-04	Levelling Control - System internal failures	■ No headlamp levelling functionality - Module internal failure	■ Install a new headlamp Control module as required. Refer to the warranty policy and procedures manual
B1041-54	Levelling Control - Missing calibration	■ Levelling sensor calibration routine not carried out	NOTE: Sensor calibration routine must be carried out with the vehicle unladen and with correct tire pressures ■ Carry out the levelling sensor calibration routine using the manufacturer approved diagnostic system
B1087-83	LIN Bus "A" - Value of signal protection calculation incorrect	■ Checksum error	■ Clear the DTC and re-test. If the DTC remains install a new headlamp Control module. Refer to the warranty policy and procedures manual

B1087-86	LIN Bus "A" - Signal invalid	■ Signal invalid	■ Clear the DTC and re-test. If the DTC remains install a new headlamp Control module. Refer to the warranty policy and procedures manual
B1087-88	LIN Bus "A" - Bus off	■ Bus Off ■ LIN Bus circuit short circuit to ground	■ Refer to the electrical circuit diagrams and check the LIN bus circuit. Check for other related DTCs
B10AE-11	Headlamp Leveling Motor - Circuit short to ground	■ Headlamp Levelling motor Control circuit - short to ground	■ Refer to the electrical circuit diagrams and check headlamp levelling motor Control circuit for short to ground and the motor signal voltage
B10AE-12	Headlamp Leveling Motor - Circuit short to battery	■ Headlamp levelling motor Control circuit - short to power	■ Refer to the electrical circuit diagrams and check headlamp levelling motor Control circuit for short to power
B10AE-64	Headlamp Leveling Motor - Signal plausibility failure	■ Signal plausibility failure	■ Refer to the electrical circuit diagrams and check the LIN bus circuit. Check for other related DTCs
B1A59-11	Sensor 5 Volt Supply - Circuit short to ground	■ Headlamp levelling sensor 5 volt supply circuit - short to ground	■ Refer to the electrical circuit diagrams and check headlamp levelling sensor 5 volt supply circuit for short to ground
B1A59-	Sensor 5 Volt		

12	Supply - Circuit short to battery	■ Headlamp levelling sensor 5 volt supply circuit - short to power	■ Refer to the electrical circuit diagrams and check headlamp levelling sensor 5 volt supply circuit for short to power
B1D64-01	Left Headlamp Swivelling Motor - General electrical failure	■ General electrical failure - Left headlamp swivelling motor error	■ Check the headlamp connections, clear the DTC and re-test. If the DTC remains install a new headlamp
B1D64-04	Left Headlamp Swivelling Motor - System internal failures	■ System internal failures - Left headlamp swivelling motor error	■ Check the headlamp connections, clear the DTC, switch off the ignition and allow sufficient time for the module to power down and re-test. If the DTC persists, install a new headlamp
B1D64-87	Left Headlamp Swivelling Motor - Missing message	■ Missing message	■ Check the headlamp connections, clear DTC and re-test. If DTC remains install a new headlamp
B1D65-01	Right Headlamp Swivelling Motor - General electrical failure	■ General electrical failure - right headlamp swivelling motor error	■ Clear the DTC and re-test. If the DTC remains install a new headlamp
B1D65-04	Right Headlamp	■ System internal failures - Right	

	Swivelling Motor - System internal failures	headlamp swivelling motor error	■ Check the headlamp connections, clear the DTC, switch off the ignition and allow sufficient time for the module to power down and re-test. If the DTC persists, install a new headlamp
B1D65-87	Right Headlamp Swivelling Motor - Missing message	■ Missing message	■ Check the headlamp connections, clear DTC and re-test, if DTC remains install a new headlamp
B1D68-00	Left Headlamp Swivelling Feedback Sensor - No sub type information	■ Sensor not detected	■ Check the headlamp connector for integrity. Refer to the circuit diagrams and check headlamp circuit. Clear DTC and re-test, if DTC remains install a new headlamp
B1D69-00	Right Headlamp Swivelling Feedback Sensor - No sub type information	■ Sensor not detected	■ Check the headlamp connector for integrity. Refer to the circuit diagrams and check headlamp circuit. Clear DTC and re-test, if DTC remains install a new headlamp
C1A04-11	Right Front Height Sensor - Circuit short to ground	■ Height sensor harness wiring short circuit to ground	■ Check the Ride Level Module for DTCs. Check the sensor connector for damage. Refer to the electrical circuit diagrams and check the sensor circuit for continuity or short circuit. Check sensor signal changes when sensor is rotated. If any height sensor fixings are slackened or found to be loose, or a height sensor has been changed, the vehicle ride height must be re-calibrated. Calibrate the system using the approved diagnostic system
C1A04-15	Right Front Height Sensor -	■ Height sensor harness wiring	■ Check the Ride Level Module for DTCs. Check the sensor connector for damage. Refer to the electrical circuit diagrams and check the sensor circuit

	Circuit short to battery or open	short circuit to power	for continuity or short circuit. Check sensor signal changes when sensor is rotated. If any height sensor fixings are slackened or found to be loose, or a height sensor has been changed, the vehicle ride height must be re-calibrated. Calibrate the system using the approved diagnostic system
C1A04-64	Right Front Height Sensor - Signal plausibility failure	■ Height sensor signal plausibility failure	■ Check the Ride Level Module for DTCs. Check the sensor connector for damage. Refer to the electrical circuit diagrams and check the sensor circuit for continuity or short circuit. Check sensor signal changes when sensor is rotated. If any height sensor fixings are slackened or found to be loose, or a height sensor has been changed, the vehicle ride height must be re-calibrated. Calibrate the system using the approved diagnostic system
C1A06-11	Right Rear Height Sensor - Circuit short to ground	■ Height sensor harness wiring short circuit to ground	■ Check the Ride Level Module for DTCs. Check the sensor connector for damage. Refer to the electrical circuit diagrams and check the sensor circuit for continuity or short circuit. Check sensor signal changes when sensor is rotated. If any height sensor fixings are slackened or found to be loose, or a height sensor has been changed, the vehicle ride height must be re-calibrated. Calibrate the system using the approved diagnostic system
C1A06-15	Right Rear Height Sensor - Circuit short to battery or open	■ Height sensor harness wiring short circuit to power	■ Check the Ride Level Module for DTCs. Check the sensor connector for damage. Refer to the electrical circuit diagrams and check the sensor circuit for continuity or short circuit. Check sensor signal changes when sensor is rotated. If any height sensor fixings are slackened or found to be loose, or a height sensor has been changed, the vehicle ride height must be re-calibrated. Calibrate the system using the approved diagnostic system
C1A06-64	Right Rear Height Sensor - Signal plausibility failure	■ Height sensor signal plausibility failure	■ Check the Ride Level Module for DTCs. Check the sensor connector for damage. Refer to the electrical circuit diagrams and check the sensor circuit for continuity or short circuit. Check sensor signal changes when sensor is rotated. If any height sensor fixings are slackened or found to be loose, or a height sensor has been changed, the vehicle ride height must be re-calibrated. Calibrate the system using the approved diagnostic system

U0001-88	High Speed CAN Communication Bus - Bus off	■ Bus off	■ Refer to the electrical circuit diagrams and check the power and ground connections to the module. Using the manufacturer approved diagnostic system, complete a CAN network integrity test. Refer to the electrical circuit diagrams and check the CAN network
U0101-00	Lost Communication with TCM - No sub type information	■ CAN Bus communication error	■ Refer to the electrical circuit diagrams and check the power and ground connections to the module. Using the manufacturer approved diagnostic system, complete a CAN network integrity test. Refer to the electrical circuit diagrams and check the CAN network between the Transmission Control Module and Headlamp Control Module
U0102-00	Lost Communication with Transfer Case Control Module - No sub type information	■ CAN Bus communication error	■ Refer to the electrical circuit diagrams and check the power and ground connections to the module. Using the manufacturer approved diagnostic system, complete a CAN network integrity test. Refer to the electrical circuit diagrams and check the CAN network between the Transfer Case Control Module and Headlamp Control Module
U0121-00	Lost Communication With Anti-Lock Brake System (ABS) Control Module - No sub type information	■ CAN Bus communication error	■ Refer to the electrical circuit diagrams and check the power and ground connections to the module. Using the manufacturer approved diagnostic system, complete a CAN network integrity test. Refer to the electrical circuit diagrams and check the CAN network between the ABS Module and Headlamp Control Module
U0126-00	Lost Communication With Steering Angle Sensor	■ CAN Bus communication error	■ Refer to the electrical circuit diagrams and check the power and ground connections to the module. Using the manufacturer approved diagnostic system, complete a CAN network integrity test. Refer to the electrical circuit diagrams and check the CAN network between the Steering Angle Sensor Control Module and Headlamp Control Module

	Module - No sub type information		
U0140-00	Lost Communication With Body Control Module - No sub type information	■ CAN Bus communication error	■ Refer to the electrical circuit diagrams and check the power and ground connections to the module. Using the manufacturer approved diagnostic system, complete a CAN network integrity test. Refer to the electrical circuit diagrams and check the CAN network between the Central Junction Box and Headlamp Control Module
U0142-00	Lost Communication With Body Control Module "B" - No sub type information	■ CAN Bus communication error	■ Refer to the electrical circuit diagrams and check the power and ground connections to the module. Using the manufacturer approved diagnostic system, complete a CAN network integrity test. Refer to the electrical circuit diagrams and check the CAN network between the Central Junction Box and Headlamp Control Module
U0300-00	Internal Control Module Software Incompatibility - No sub type information	■ Car Configuration File information incompatible to ECU	■ Check/amend Car Configuration File using the manufacturer approved diagnostic system
U0402-00	Invalid Data Received From Transmission Control Module - No sub type information	■ No sub type information	■ Check the Transmission Control Module for related DTCs and refer to the relevant DTC index
U0403-00	Invalid Data Received From Transfer Case Control Module	■ No sub type information	■ Check the Transfer Case Control Module for related DTCs and refer to the relevant DTC index

	- No sub type information		
U0415-00	Invalid Data Received From Anti-Lock Brake System Control Module - No sub type information	■ Invalid data received from ABS module	■ Check the ABS Module for related DTCs and refer to the relevant DTC index
U0428-00	Invalid Data Received From Steering Angle Sensor Module - No sub type information	■ No sub type information	■ Check the steering angle sensor module for related DTCs and refer to the relevant DTC index
U2100-00	Initial Configuration Not Complete - No sub type information	■ Car Configuration File information not received completely	■ Check/amend Car Configuration File using manufacturer approved diagnostic system
U2101-00	Control Module Configuration Incompatible - No sub type information	■ Car Configuration File information incompatible to ECU	■ Check/amend Car Configuration File using manufacturer approved diagnostic system
U3002-81	Vehicle Identification Number - Invalid serial data received	■ Stored VIN does not match most recent VIN	■ Check/amend Car Configuration File using manufacturer approved diagnostic system

U3003-16	Battery Voltage - Circuit voltage below threshold	■ Circuit voltage below threshold	■ Check vehicle battery and charging system. Refer to the relevant section in the workshop manual. Refer to the electrical guides and check the power and ground supply circuits to the module
U3003-17	Battery Voltage - Circuit voltage above threshold	■ Circuit voltage above threshold	■ Check vehicle battery and charging system. Refer to the relevant section in the workshop manual. Refer to the electrical guides and check the power and ground supply circuits to the module
U3003-62	Battery Voltage - Signal compare failure	■ Mis-match in battery voltage, between Central Junction Box and headlamp Control module, of 2 volts or more	■ Check vehicle battery and charging system. Refer to the relevant section in the workshop manual. Refer to the electrical circuit diagrams and check the power and ground supply circuits to both modules

GENERAL INFORMATION

DESCRIPTION AND OPERATION

HEADLAMP CONTROL MODULE B (INTERIOR MIRROR)

CAUTION:

Diagnosis by substitution from a donor vehicle is **NOT** acceptable. Substitution of control modules does not guarantee confirmation of a fault, and may also cause additional faults in the vehicle being tested and/or the donor vehicle

NOTES:

- If the control module or a component is suspect and the vehicle remains under manufacturer warranty, refer to the warranty policy and procedures manual, or determine if any prior approval programme is in operation, prior to the installation of a new module/component
- Generic scan tools may not read the codes listed, or may read only 5-digit codes. Match the 5 digits from the scan tool to the first 5 digits of the 7-digit code listed to identify the fault (the last 2 digits give extra information read by the manufacturer-approved diagnostic system)
- When performing voltage or resistance tests, always use a digital multimeter accurate to three decimal places and with a current calibration certificate. When testing resistance, always take the resistance of the digital multimeter leads into account
- Check and rectify basic faults before beginning diagnostic routines involving pinpoint tests
- Inspect connectors for signs of water ingress, and pins for damage and/or corrosion
- If diagnostic trouble codes are recorded and, after performing the pinpoint tests, a fault is not present, an intermittent concern may be the cause. Always check for loose connections and corroded terminals
- Where an 'on demand self-test' is referred to, this can be accessed via the 'diagnostic trouble code monitor' tab on the manufacturers approved diagnostic system
- Check DDW for open campaigns. Refer to the corresponding bulletins and SSMs which may be valid for the specific customer complaint and carry out the recommendations as required

The table below lists all Diagnostic Trouble Codes (DTCs) that could be logged in the Headlamp Control Module B, for additional Diagnosis and Testing information refer to the relevant Diagnosis and Testing Section.
For additional information, refer to: Headlamps (417-01 Exterior Lighting, Diagnosis and Testing).

DTC	DESCRIPTION	POSSIBLE CAUSES	ACTION
B1286-16	Interior mirror - Circuit voltage below threshold	■ Interior mirror circuit voltage below threshold. The electrochromic function does not work ■ Interior mirror circuit power or ground circuit open circuit, high resistance ■ Interior mirror module internal failure	**NOTE:** The interior mirror will self recover after the supply voltage reaches normal conditions ■ Refer to the electrical circuit diagrams and check the interior mirror power and ground circuits for open circuit, high resistance ■ Check the voltage between pin 1 and pin 3 of the module connector. The voltage should be above 8.5 volts for normal conditions ■ Using the manufacturer approved diagnostic system, clear the DTC and retest ■ If the DTC is set permanent and voltage is above 8.5 volts check and install a new module as required
B1286-17	Interior mirror - Circuit voltage above threshold	■ Interior mirror module circuit voltage above threshold. The electrochromic function does not work ■ Battery/charging system fault ■ Interior mirror module internal failure	**NOTE:** The interior mirror will self recover after the supply voltage reaches normal conditions

			■ Using the manufacturer approved diagnostic system, check the datalogger signal - main ECU supply voltage (0xDD02) ■ Check the voltage between pin 1 and pin 3 of the interior mirror module connector. The voltage should to be below 16.5 volts for normal conditions ■ Check the vehicle charging system performance to ensure the voltage regulation is correct ■ Clear the DTC and retest. If the problem persists, renew the interior mirror module
B1286-44	Interior mirror - Data memory failure	■ Interior mirror module internal failure	■ Clear the DTC and re-test ■ Check and install a new interior mirror module as required
B1286-47	Interior mirror - Watchdog/safety micro controller failure	■ Interior mirror module temporarily disabled due to watchdog reset ■ Interior mirror module internal failure	**NOTE:** The interior mirror module will self recover after a watchdog reset ■ This DTC is for information only. Clear the DTC and retest ■ If the DTC is set permanent and the problem persists, check and install a new interior mirror module as required
B1286-49	Interior mirror - Internal electronic failure	■ Interior mirror module internal failure	■ Clear the DTC and re-test

			■ Check and install a new interior mirror module as required
B1286-60	Interior mirror - Reserved by document	■ Interior mirror operation temperature below limit	■ Allow the vehicle interior temperature to increase, the interior mirror will self recover after temperature reaches normal conditions
B1286-78	Interior mirror - Alignment or adjustment incorrect	■ Interior mirror module low sensitivity mode has been activated	■ The low sensitivity mode is cancelled when the ignition is cycled ■ Clear the DTC and re-test
B1286-96	Interior mirror - Component internal failure	■ Lost communication with the central junction box ■ Interior mirror module internal failure	■ Using the manufacturer approved diagnostic system, clear DTC and retest ■ Using the manufacturer approved diagnostic system, complete a CAN network integrity test ■ Refer to the electrical circuit diagrams and check the CAN harness between the central junction box and interior mirror module ■ Check and install a new interior mirror module as required
B1286-97	Interior mirror - Component or system operation obstructed or blocked	■ Interior mirror temporary disabled ■ Interior mirror camera has detected a partial or total blockage of the field of view	■ Check to see if anything is blocking the field of view of the interior mirror camera ■ Using the manufacturer approved diagnostic system, clear DTC and retest ■ The interior mirror will self recover after failure condition has been rectified

B1286-98	Interior mirror - Component or system over temperature	■ Interior mirror temporary disabled because of operation temperature above limit	■ Interior mirror will self recover after the temperature reaches normal condition
B12AC-11	Electrochromic door mirror - Circuit short to ground	■ Electrochromic door mirror output circuit short circuit to ground	**NOTE:** To aid fault finding use the manufacturer approved diagnostic system to force the automatic dim function ■ Refer to the electrical circuit diagrams and check the interior mirror module harness, including both exterior mirror circuits for short circuit to ground, repair as necessary
B12AC-12	Electrochromic door mirror - Circuit short to battery	■ Electrochromic door mirror output circuit short circuit to power	**NOTE:** To aid fault finding use the manufacturer approved diagnostic system to force the automatic dim function ■ Refer to the electrical circuit diagrams and check the interior mirror module harness, including both exterior mirror circuits for short circuit to power, repair as necessary
B12EB-78	Camera horizontal alignment - Alignment or	■ Interior mirror module camera misaligned in the horizontal direction	**NOTE:**

	adjustment incorrect	■ Interior mirror module fault ■ Windscreen alignment incorrect	To trigger the possible fault conditions for this DTC, the vehicle may need to be driven during night time conditions ■ Check the interior mirror module for security and correct positioning. Clear the DTC and retest for normal operation ■ Renew the interior mirror module. See topix workshop manual, section 417-01 exterior lighting, description and operation for auto aim calibration procedure ■ If the problem persists, suspected windscreen alignment incorrect
B12EC-78	Camera vertical alignment - Alignment or adjustment incorrect	■ Interior mirror module camera misaligned in the vertical direction ■ Interior mirror module fault ■ Windscreen alignment incorrect	**NOTE:** To trigger the possible fault conditions for this DTC, the vehicle may need to be driven during night time conditions ■ Check the interior mirror module for security and correct positioning. Clear the DTC and retest for normal operation ■ Renew the interior mirror module. See topix workshop manual, section 417-01 exterior lighting, description and operation for auto aim calibration procedure ■ If the problem persists, suspected windscreen alignment incorrect

B134A-78	Target aim verification - Camera horizontal alignment - Alignment or adjustment incorrect	**NOTE:** This DTC is for use during the factory aim routine only ■ Interior mirror module camera misaligned in the horizontal direction. The windscreen button and the interior mirror module attachment alignment incorrect ■ Interior mirror module internal failure	■ Check the accuracy of interior mirror module attachment and the windscreen button ■ Check and install a new interior mirror module as required
B134B-78	Target aim vertical - Camera horizontal alignment - Alignment or adjustment incorrect	**NOTE:** This DTC is for use during the factory aim routine only ■ Interior mirror module camera misaligned in the vertical direction. The windscreen button and the interior mirror module attachment alignment incorrect ■ Interior mirror module internal failure	■ Check the accuracy of the interior mirror module attachment and the windscreen button ■ Check and install a new interior mirror module as required
U0010-88	Medium speed CAN communication bus	■ Medium speed CAN bus circuit fault	■ Refer to the electrical circuit diagrams and check the power and ground connections to the module

	- Bus off		■ Using the manufacturer approved diagnostic system, complete a CAN network integrity test ■ Refer to the electrical circuit diagrams and check the CAN network
U0140-00	Lost communication with body control module - No sub type information	■ Lost communication with central junction box	■ Refer to the electrical circuit diagrams and check the power and ground connections to the module ■ Using the manufacturer approved diagnostic system, complete a CAN network integrity test ■ Refer to the electrical circuit diagrams and check the CAN network between the interior mirror and central junction box
U0300-00	Internal control module software incompatibility - No sub type information	■ Interior mirror module software incompatibility	■ Using the manufacturer approved diagnostic system, ensure that the interior mirror module contains the latest software version and is correctly configured, update if necessary. Clear the DTC and retest
U201A-57	Control module main calibration data - Invalid /incomplete software component	■ Incorrect interior mirror module fitted ■ Main calibration is invalid to car configuration file or not complete stored to the interior mirror module	**NOTE:** Due to the mechanical calibration tolerance the correct interior mirror module assembly must be used for the vehicle model types in question and it is not exchangeable with other vehicle model types ■ Using the manufacturers approved diagnostic system, compare the vehicle type in the interior mirror module with the car configuration file

			(parameter 1), if these do not match the incorrect interior mirror module has been fitted ■ Using the manufacturers approved diagnostic system, check the configuration of the car configuration file and the software version of the interior mirror module is correct
U2100-00	Initial configuration not complete - No sub type information	■ Invalid/incomplete software component ■ Interior mirror module internal failure	■ Using the manufacturers approved diagnostic system, check the configuration of the car configuration file and the software version of the interior mirror module is correct ■ Using the manufacturer approved diagnostic system check the central junction box for related DTCs and refer to the relevant DTC index ■ If the problem persists, renew the interior mirror module
U2101-00	Control module configuration incompatible - No sub type information	■ Interior mirror is not configured correctly	■ Using the manufacturer approved diagnostic system check and up-date the car configuration file as required. Clear the DTC and re-test

GENERAL INFORMATION

DESCRIPTION AND OPERATION

INTRODUCTION

Modern vehicles contain many materials and liquids which if not handled with care can be hazardous to both personal health and the environment. Also, many of the procedures associated with vehicle maintenance and repair involve physical hazards or other risks to health.

This subsection lists some of these hazardous operations and the materials and equipment associated with them. Precautions necessary to avoid these hazards are identified.

The list is not exhaustive and all operations and procedures and the handling of materials, should be carried out with health and safety in mind.

Before using any product the Materials Safety Data Sheet supplied by the manufacturer or supplier should be consulted.

⚠ WARNING:

Many liquids and other substances used in motor vehicles are poisonous and should under no circumstances be consumed and should, as far as possible, be kept from contact with the skin. These liquids and substances include acid, anti-freeze, brake fluid, fuel, windscreen washer additives, lubricants, refrigerants and various adhesives.

ACIDS AND ALKALIS

For example - alkalis such as caustic soda used in cleaning materials; acids such as sulphuric acid used in batteries.

Both alkalis and acids are irritant and corrosive to the skin, eyes, nose and throat. They cause burns and can destroy ordinary protective clothing.

Avoid splashes to the skin, eyes and clothing. Wear suitable protective impervious apron, gloves and goggles. Do not breath mists.

Make sure access to eye wash bottles, shower and soap are readily available for splashing accidents.

Display Eye Hazard sign.

AIR BAGS

Highly flammable, explosive – observe No Smoking policy.

Used within the vehicle as safety restraints.

The inflator contains a high-energy propellant which, when ignited, produces a VERY HOT GAS (2500°C).

The gas inflator (generator) used in air bags is Sodium Azide. This material is hermetically sealed in each air bag module and is completely consumed during deployment. No attempt should be made to open an air bag inflator as this will lead to the risk of exposure to Sodium Azide. If a gas generator is ruptured, full protective clothing should be worn when dealing with the spillage.

After normal deployment, gloves and safety goggles should be worn during the handling process.

Deployed air bags should be disposed of in a plastic bag in accordance with local regulations at an approved chemical waste site.

Following any direct contact with Sodium Azide:

- Wash affected areas thoroughly with water.
- **SEEK IMMEDIATE MEDICAL ASSISTANCE.**

Air Bags - Do's

- Do store modules in an upright position.
- Do keep modules dry.
- Do carry modules with the cover side pointing away from the body.

- Do place modules with their cover side upwards.
- Do carefully inspect modules for damage.
- Do stand to one side when connecting modules.
- Do make sure all test equipment is properly calibrated and maintained.
- Do wash hands after handling deployed air bags.

Air Bags - Do Not

- Do Not store highly flammable material together with modules or gas generators.
- Do Not store gas generators at temperatures exceeding 80°C.
- Do Not store modules upside down.
- Do Not attempt to open a gas generator housing.
- Do Not expose gas generators to open flame or sources of heat.
- Do Not place anything on top of a module cover.
- Do Not use damaged modules.
- Do Not touch a fired module or gas generator for at least 10 minutes after firing.
- Do Not use any electrical probes on the wiring circuit.

AIR SUSPENSION

Whenever work is being undertaken on the air suspension system, suitable eye protection must be worn.

AIR CONDITIONING REFRIGERANT

Highly flammable, combustible – observe No Smoking policy.

Skin contact may result in frostbite.

Instructions given by the manufacturer must be followed. Avoid naked lights, wear suitable protective gloves and goggles.

If refrigerant comes into contact with the skin or eyes, rinse the affected areas with water immediately. Eyes should also be rinsed with an appropriate irrigation solution such as a solution of 9% Sodium Chloride and Purified Water. **DO NOT RUB THE EYES AND SEEK IMMEDIATE MEDICAL ATTENTION.**

AIR CONDITIONING REFRIGERANT

Do Not

- Do Not expose refrigerant bottles to sunlight or heat.
- Do Not expose refrigerant bottles to frost.
- Do Not drop refrigerant bottles.
- Do Not vent refrigerant to atmosphere under any circumstance.
- Do Not mix refrigerants.

ADHESIVES AND SEALANTS

Many adhesives and sealants are highly flammable – OBSERVE NO SMOKING POLICY. These items, should be stored in flameproof cabinets in No Smoking areas. Cleanliness and tidiness in use should be observed, for example disposable paper covering benches. All adhesives and sealants should be dispensed from applicators where possible; containers, including secondary containers, should be labelled appropriately.

ANAEROBIC, CYANOACRYLATE (SUPER-GLUES) AND OTHER ACRYLIC ADHESIVES

Many are irritant, sensitizing or harmful to the skin and respiratory tract. Some are eye irritants.

Skin and eye contact should be avoided and the manufacturer's instructions followed.

Cyanoacrylate adhesives (super-glues) MUST NOT contact the skin or eyes. If skin or eye tissue is bonded, cover with a clean moist pad and **SEEK IMMEDIATE MEDICAL ATTENTION.** Do not attempt to pull skin tissue apart. Use in well ventilated areas as vapors can cause irritation to the nose and eyes.

For two-pack systems see Resin-based and Isocyanate Adhesives/Sealers.

SOLVENT-BASED ADHESIVES/SEALERS - SEE SOLVENTS

Follow manufacturers instructions.

WATER-BASED ADHESIVES/SEALERS

Those based on polymer emulsions and rubber/latex may contain small amounts of volatile, toxic and harmful chemicals. Skin and eye contact should be avoided and adequate ventilation provided during use.

HOT MELT ADHESIVES

In the solid state, they are safe. In the molten state they may cause burns and health hazards may arise from the inhalation of toxic fumes.

Use appropriate protective clothing and a thermostatically controlled heater with a thermal cut-out and adequate extraction.

RESIN-BASED ADHESIVES/SEALERS, FOR EXAMPLE EPOXIDE AND FORMALDEHYDE RESIN-BASED

Mixing should be carried out in well ventilated areas as harmful or toxic volatile chemicals may be released.

Skin contact with uncured resins and hardeners can result in irritation, dermatitis, and absorption of toxic or harmful chemicals through the skin. Splashes can damage the eyes.

Provide adequate ventilation and avoid skin and eye contact.

ISOCYANATE (POLYURETHANE) ADHESIVES/SEALERS

See also Resin-based Adhesives

Individuals suffering from asthma or respiratory allergies should not work with or near these materials as sensitivity reactions can occur.

Over exposure is irritating to the eyes and respiratory system. Excessive concentrations may produce effects on the nervous system including drowsiness. In extreme cases, loss of consciousness may result. Long term exposure to vapour concentrations may result in adverse health effects.

Prolonged contact with the skin may lead to skin irritation and in some cases, dermatitis.

Splashes entering the eye will cause discomfort and possible damage.

Any spraying should preferably be carried out in ventilated booths which incorporate facilities for removing vapors and spray droplets from the breathing zone.

Wear appropriate gloves, eye and respiratory protection.

ANTIFREEZE

May be flammable when undiluted.

Vapors may be given off from coolant antifreeze when heated. Avoid breathing these vapors.

Antifreeze may be absorbed through the skin in toxic or harmful quantities. Antifreeze, if swallowed, can be fatal; **SEEK IMMEDIATE MEDICAL ATTENTION.**

BATTERY ACIDS

See also Alkalis and Acids.

Gases released during battery charging are explosive. Always remove the battery from the vehicle prior to charging. Never use naked flames or allow sparks near charging or recently charged batteries. NEVER add acid to a battery, the chemical reaction produced will be violent and explosive. In cases of eye contact, wash affected area with copious amounts of water and **SEEK IMMEDIATE MEDICAL ATTENTION.**

Make sure there is adequate ventilation during battery charging, observe NO SMOKING POLICY.

BRAKE PADS AND LININGS

Always fit the correct grade and specification of brake pads and linings. When renewing pads and linings, always replace as complete axle sets.

BRAKE AND CLUTCH FLUID

Splashes to the skin and eyes are irritating and in the long term can be damaging, avoid prolonged skin contact. In cases of eye contact, wash affected area with copious amounts of water and SEEK IMMEDIATE MEDICAL ATTENTION.

CHEMICAL MATERIALS

All chemical materials should always be used with caution and stored and handled with care. They may be toxic, harmful, corrosive, irritant or highly flammable and give rise to hazardous fumes and dusts.

The effects of excessive exposure to chemicals may be immediate or delayed; briefly experienced or permanent; cumulative; superficial; life threatening; or may reduce life expectancy.

CHEMICAL MATERIALS - DO'S

- Do carefully read and observe hazard and precaution warnings given on material containers (labels) and in any accompanying leaflets, posters or other instructions. Material health and safety data sheets can be obtained from manufacturers.

- Do remove chemical materials from the skin and clothing as soon as practicable after soiling. Change heavily soiled clothing and have it cleaned.
- Do organise work practices and protective clothing to avoid soiling of the skin and eyes.
- Do avoid breathing vapors, aerosols, dusts or fumes; inadequate container labelling; fire and explosion hazards.
- Do wash before job breaks, before eating, smoking, drinking or using toilet facilities when handling chemical materials.
- Do keep work areas clean, uncluttered and free of spills.
- Do store chemical materials according to national and local regulations.
- Do keep chemical materials out of the reach of children.

CHEMICAL MATERIALS - DO NOT

- Do Not mix chemical materials except under the manufacturers instructions; some chemicals can form other toxic or harmful chemicals, give off toxic or harmful fumes or become explosive when mixed together.
- Do Not spray chemical materials, particularly those based on solvents, in confined spaces, for example when people are inside a vehicle.
- Do Not apply heat or flame to chemical materials except under the manufacturers instructions. Some are highly flammable and some may release toxic or harmful fumes.
- Do Not leave containers open. Fumes given off can build up to toxic, harmful or explosive concentrations. Some fumes are heavier than air and will accumulate in confined areas such as pits.
- Do Not transfer chemical materials to unlabelled containers.

- Do Not clean hands or clothing with chemicals. Chemicals, particularly solvents and fuels, will dry skin and may cause irritation leading to dermatitis or be absorbed through the skin in toxic or harmful quantities.
- Do Not use emptied containers for other materials except when they have been cleaned under supervised conditions.
- Do Not sniff or smell chemical materials, even brief exposure to high concentrations of fumes can be toxic or harmful.

CORROSION PROTECTION MATERIALS

Some corrosion protection materials are highly flammable – observe NO SMOKING POLICY.

These materials are varied and the manufacturers instructions must always be followed. The materials may contain solvents, resins or petroleum products. Skin and eye contact should be avoided. They should only be sprayed in conditions of adequate ventilation and not in confined spaces.

DUST

Dust or powder produced during repair operations may be irritant, harmful or toxic. Avoid breathing dusts from powdery chemical materials or those arising from dry abrasion operations. Wear respiratory protection if ventilation is inadequate.

Fine dusts of combustible material can present an explosion hazard. Avoid explosive limits and sources of ignition.

ELECTRICAL EQUIPMENT

Electric shock can result from the use of faulty electrical equipment or from the misuse of equipment in good condition.

Make sure that electrical equipment is maintained in good condition and frequently tested. Faulty equipment should be labelled and preferably removed from the work station.

Make sure that flexes, cables, plugs and sockets are not frayed, kinked, cut, cracked or otherwise damaged. If using cable reel extension equipment, ALWAYS ensure that the cable is fully unwound from the reel.

Make sure that electrical equipment and flexes do not come into contact with water.

Make sure that electrical equipment is protected by the correct rated fuse.

Never misuse electrical equipment and never use equipment which is in any way faulty. The results could be fatal.

Make sure that the cables of mobile electrical equipment cannot get trapped and damaged, such as in a vehicle hoist.

Make sure that the designated electrical workers are trained in basic First Aid.

In cases of electrocution:

- Switch off the power supply before approaching the victim.

- If this is not possible, **DO NOT TOUCH THE VICTIM** but push or drag the person from the source of electricity using dry, non-conductive material.
- Commence resuscitation if trained to do so.
- **SEEK IMMEDIATE MEDICAL ATTENTION.**

EXHAUST FUMES

These contain asphyxiating, harmful and toxic chemicals and particles such as carbon oxides, nitrogen oxides, aldehydes, lead and aromatic hydrocarbons. Engines should be run only under conditions of adequate exhaust extraction or general ventilation and not in confined spaces.

GASOLINE (PETROL) ENGINE

There may not be adequate warning of odour or of irritation before toxic or harmful effects arise. These may be immediate or delayed.

GAS OIL (DIESEL ENGINE)

Soot, discomfort and irritation usually give adequate warning of hazardous fume concentrations.

FIBRE INSULATION

The fibrous nature of surfaces and cut edges can cause skin irritation. This is usually a physical and not a chemical effect.

Precautions should be taken to avoid excessive skin contact through careful organization of work practices and the use of gloves.

FIRE

Many of the materials found on or associated with the repair of vehicles are highly flammable. Some give off toxic or harmful fumes if burnt; others such as fluoroelastomers when burnt or damaged by excessive heat can break down and produce highly corrosive hydrofluoric acid - See Fluoroelastomers.

Should any material be in a burnt or overheated condition, handle with extreme caution and wear protective clothing when handling such items. Dispose of such material in accordance with local regulations.

Decontaminate and dispose of protective clothing immediately after use.

Observe strict fire safety when storing and handling flammable materials or solvents, particularly near electrical equipment or welding processes.

Make sure, before using electrical or welding equipment, that there is no fire hazard present.

Have a suitable fire extinguisher available when using welding or heating equipment.

FIRST AID

Apart from meeting any legal requirements it is desirable for someone in the workshop to be trained in First Aid procedures.

Splashes in the eye should be flushed carefully with clean water for at least ten minutes.

Soiled skin should be washed with soap and water.

In case of cold burns, from alternative fuels, place affected area in cool to cold water.

Individuals affected by inhalation of gases and fumes should be removed to fresh air immediately. If effects persist, consult a doctor.

If liquids are swallowed inadvertently, consult a doctor giving him the information on the container or label. Do not induce vomiting unless this action is indicated on the label.

FLUOROELASTOMERS (SYNTHETIC RUBBER)

Many 'O' rings, seals, hoses, flexible pipes and other similar which appear to be manufactured from natural rubber are, in fact, made of synthetic materials called Fluoroelastomers.

Under normal operating conditions, these materials are safe and do not constitute a health hazard. However, if the materials are damaged by burning or exposure to excessive heat, they can break down and produce highly corrosive hydrofluoric acid.

⚠ WARNING:

Contact with hydrofluoric acid can cause serious burns on contact with the skin. If skin contact does occur, carry out the following steps immediately:

Remove any contaminated clothing.

SEEK IMMEDIATE MEDICAL ATTENTION

Irrigate affected area of skin with copious amounts of cold water or limewater for 15 to 60 minutes.

FOAMS - POLYURETHANE

Used in sound and noise insulation. Cured foams used in seat and trim cushioning.

Unreacted components are irritating and may be harmful to the skin and eyes. Wear gloves and goggles.

Individuals with chronic respiratory diseases, asthma, bronchial medical problems, or histories of allergic diseases should not work in or near uncured materials.

The components, vapors or spray mists can cause direct irritation, sensitivity reactions and may be toxic or harmful.

Vapors and spray mists must not be inhaled. These materials must be applied with adequate ventilation and respiratory protection. Do not remove the respirator immediately after spraying, wait until the vapour/mists have cleared.

Burning of the uncured components and the cured foams can generate toxic and harmful fumes. Smoking, naked flames or the use of electrical equipment during foaming operations and until vapors/mists have cleared should not be allowed. Any heat cutting of cured foams or partially cured foams should be carried out in areas having suitable fume extraction equipment.

FUELS

Avoid skin contact with fuel where possible. Should contact occur, wash the affected skin with soap and water.

GASOLINE (PETROL)

Highly flammable - OBSERVE NO SMOKING POLICY.

Swallowing gasoline (petrol) can result in mouth and throat irritation and absorption from the stomach can result in drowsiness and unconsciousness. Small amounts can be fatal to children. Inhalation into the lungs, through vomiting, is a very serious hazard.

Gasoline (petrol) dries the skin and can cause irritation and prolonged or repeated contact may cause dermatitis; if it is allowed to enter the eyes, it will cause severe smarting. Wash affected area with copious amounts of water and **SEEK IMMEDIATE MEDICAL ATTENTION.**

Gasoline (petrol) may contain appreciable quantities of benzene, which is toxic upon inhalation and the concentration of vapors must be kept very low. High concentrations will cause eye, nose and throat irritation, nausea, headache, depression and symptoms of drunkenness. Very high concentrations will result in rapid loss of consciousness.

Make sure there is adequate ventilation when handling and using gasoline (petrol). Great care must be taken to avoid the serious consequences of inhalation in the event of vapour build up arising from spillages in confined spaces.

Special precautions apply to cleaning and maintenance operations on gasoline (petrol) storage tanks.

Gasoline (petrol) should not be used as a cleaning agent. It must not be siphoned by mouth.

GAS-OIL (DIESEL FUEL)

Combustible.

Prolonged skin contact with high boiling point gas oils (diesel fuel) may cause serious skin disorders including skin cancer.

Inhalation into the lungs will cause internal bleeding **- SEEK IMMEDIATE MEDICAL ATTENTION.**

If swallowed, DO NOT induce vomiting - SEEK IMMEDIATE MEDICAL ATTENTION.

KEROSENE (PARAFFIN)

Used also as heating fuel, solvent and cleaning agent.

Flammable - OBSERVE NO SMOKING POLICY.

Irritation of the mouth and throat may result from swallowing. The main hazard from swallowing arises if liquid aspiration into the lungs occurs.

Liquid contact dries the skin and can cause irritation or dermatitis. Splashes in the eye may be slightly irritating.

In normal circumstances the low volatility does not give rise to harmful vapors. Exposure to mists and vapors from kerosene at elevated temperature should be avoided (mists may arise in dewaxing). Avoid skin and eye contact and make sure there is adequate ventilation.

If swallowed, DO NOT induce vomiting - SEEK IMMEDIATE MEDICAL ATTENTION.

GAS CYLINDERS

Gases such as oxygen, acetylene, argon and propane are normally stored in cylinders at pressures of up to 138 bar (13800 kPa) (2000 lbf/in²) and great care should be taken in handling these cylinders to avoid mechanical damage to them or to the valve gear attached. The contents of each cylinder should be clearly identified by appropriate markings.

Cylinders should be stored in well ventilated enclosures, and protected from ice and snow or direct sunlight. Fuel gases, for example acetylene and propane should not be stored in close proximity to oxygen cylinders.

Care should be exercised to prevent leaks from gas cylinders and lines and also to avoid sources of ignition.

Only trained personnel should undertake work involving gas cylinders.

GENERAL WORKSHOP TOOLS AND EQUIPMENT

It is essential that all tools and equipment are maintained in good condition and the correct safety equipment is used where required.

Never use tools or equipment for any purpose other than that for which they were designed. Never overload equipment such as hoists, jacks, axle and chassis stands or lifting slings. Damage caused by overloading is not always immediately apparent and may result in a fatal failure the next time that the equipment is used.

Do not use damaged or defective tools or equipment, particularly high speed equipment such as grinding wheels. A damaged grinding wheel can disintegrate without warning and cause serious injury.

Wear suitable eye protection when using grinding, chiselling or sand blasting equipment.

Wear a suitable breathing mask when using abrasive blasting equipment or using spraying equipment.

Make sure there is adequate ventilation to control dusts, mists and fumes.

HIGH PRESSURE AIR, LUBRICATION AND OIL TEST EQUIPMENT

Always keep high pressure equipment in good condition, and regularly maintained, particularly at joints and unions.

Never direct a high pressure nozzle, for example diesel injector, at the skin as the fluid may penetrate to the underlying tissue and cause serious injury.

JACKING

Always refer to the Jacking and Lifting section of this manual prior to raising the vehicle off the ground.

When vehicle is to be raised by means of a jack, ensure that it is standing on level ground, that parking brake is applied and wheels are chocked. ALWAYS use the recommended jacking points and ensure that vehicle jack has sufficient load capacity for the weight of the vehicle.

⚠ **WARNING:**

Do not work on or under a vehicle supported only by a jack. Always support the vehicle on safety stands.

Ensure that hoists have sufficient load capacity for the weight of the vehicle.

LEGAL ASPECTS

There are many laws and regulations relating to health and safety in the use and disposal of materials and equipment in a workshop.

For a safe working environment and to avoid environmental pollution, workshops should be familiar, in detail, with the many health and safety laws and regulations within their country, published by both national and local authorities.

LUBRICANTS AND GREASES

Avoid all prolonged and repeated contact with mineral oils. All lubricants and greases may be irritating to the eyes and skin.

USED ENGINE OIL

Prolonged and repeated contact with engine oil will result in the removal of natural fats from the skin, leading to dryness, irritation and dermatitis. In addition, used engine oil contains potentially harmful contaminants which may cause skin cancer. Adequate means of skin protection and washing facilities must be provided.

Do not employ used engine oils as lubricants or for any application where appreciable skin contact is likely to occur.

HEALTH PROTECTION PRECAUTIONS

- Avoid prolonged and repeated contact with oils, particularly used engine oils.
- Wear protective clothing, including impervious gloves where practicable.
- Do not put oily rags into pockets.
- Avoid contaminating clothes, particularly underpants, with oil.
- Heavily soiled clothing and oil-impregnated footwear should not be worn. Overalls must be cleaned regularly.
- First Aid treatment should be obtained immediately for open cuts and wounds.
- Use barrier creams, applying them before each work period, to help the removal of oil from the skin.
- Wash with soap and water to make sure all oil is removed (skin cleansers and nail brushes will help). Preparations containing lanoline replace the natural skin oils which have been removed.
- Do not use gasoline (petrol), kerosene (paraffin), diesel fuel (gas oil), thinners or solvents for cleaning skin.
- If skin disorders develop, obtain medical advice without delay.
- Where practicable, degrease components prior to handling.
- Where there is a risk of eye contact, eye protection should be worn, for example chemical goggles or face shields; in addition an eye wash facility should be provided.

ENVIRONMENTAL PRECAUTIONS

This section provides general information which can help to reduce the environmental impacts from the activities carried out in workshops.

Emissions to air

Many of the activities that are carried out in workshops emit gases and fumes which can contribute to global warming, depletion of the ozone layer and/or the formation of photochemical smog at ground level. By considering how the workshop activities are carried out, these gases and fumes can be minimised, thus reducing the impact on the environment.

Exhaust fumes

Running car engines is an essential part of workshop activities and exhaust fumes need to be ventilated to atmosphere. However, the amount of time engines are running and the position of the vehicle should be carefully considered at all times, to reduce the release of poisonous gases and minimise the inconvenience to people living nearby.

Solvents

Some of the cleaning agents used are solvent based and will evaporate rapidly to atmosphere if used carelessly, or if containers are left unsealed. All containers must be firmly closed when not required and solvent should be used sparingly. Wherever possible, solvents having a low toxicity and flammability should be selected. Always follow the instructions supplied by the solvent manufacturer. Similarly, many paints are solvent based and the spray should be used in such a way as to reduce emissions to a minimum.

Refrigerant

It is illegal to release any refrigerant into the atmosphere. Discharge and replacement of these materials from air conditioning units should only be carried out using the appropriate equipment.

Discharges to water

Most workshops will have two systems for discharging waste water - storm drains and foul drains. Storm drains should only receive clean water i.e. rainwater. Foul drains will accept many of the normal waste water i. e. washing water, detergents and domestic type waste BUT NOT oil, petrol, solvent, acids, hydraulic fluid, antifreeze and similar fluids. If in doubt, always consult the local authority or water company.

Spillages

Every precaution must be taken to prevent spillage of oil, fuel, solvents etc., reaching the drains. All handling of such materials must take place well away from drains and preferably in an area with a suitable containing wall to prevent discharge into drains or watercourses. If a spillage occurs, it must be soaked up immediately using a spill kit where provided.

Checklist

Spillage prevention:

- Store liquids in a secure area.
- Make sure that taps on liquid containers are secure and cannot be accidentally turned on.
- Protect bulk storage tanks from vandalism by locking the valves.

- Transfer liquids from one container to another in an area away from open drains.
- Ensure lids are replaced securely on containers.
- Have spill kits available near to points of storage and liquid handling areas.

Spill Kits

Special materials are available to absorb a number of different substances. They can be in granular form, ready to use and are supplied in suitable containers. Disposal of used spill absorbing material is dealt with in Waste management.

LAND CONTAMINATION

Oils, fuels and solvents etc. can contaminate any soil with which they come into contact. Such materials MUST never be disposed of by pouring on to soil and every precaution must be taken to avoid spillage reaching soil. Waste materials stored on open ground could either leak or have contaminating substances washed off them that would contaminate the land. Always store these materials in suitable skips or similarly robust containers.

LEGAL COMPLIANCE

Some sites may have a discharge consent for effluent discharge to the foul drain for a car wash etc. It is essential to know the types of effluent which are allowed to be discharged into the drain and to check the results of any monitoring carried out by the Water Company.

Where paint spraying operations are carried out it may be necessary to apply to the Local Authority for an air emissions licence to operate the plant. If such a licence is necessary, additional precautions will be necessary to comply with the requirements and the results of any air quality monitoring must be checked regularly.

Checklist

Always adhere to the following:

- Know what legal consents and licences apply to the operations.
- Check that the emissions and discharges comply with legal requirements.

WASTE MANAGEMENT

Pollution can be reduced by careful handling, storage and disposal of all waste materials that occur on sites. Legislation makes it illegal to dispose of waste materials other than to licensed waste carriers and disposal sites.

This means that it is necessary to not only know what the waste materials are but also to have the necessary documentation and licences.

Handling and storage of waste

Ensure that waste materials are not poured down the drain or on to soil and are stored in such a way that they do not escape on to land or soil.

All waste must be segregated into individual types e.g. oils, metals, batteries, scrap components etc. This will prevent any reaction between different materials and assist in disposal.

Disposal of waste

Dispose of waste in accordance with the following guidelines:

- **Fuel, hydraulic fluid, anti-freeze and oil:** Keep separate and dispose of to specialist contractors.
- **Refrigerant:** Collect in specialist equipment and reuse.
- **Detergents:** Safe to pour down the foul drain if diluted.
- **Paint, thinners:** Keep separate and dispose of to specialist contractor.
- **Components:** Return to supplier for refurbishment or disassemble and reuse any suitable parts. Dispose of remainder in ordinary waste.
- **Small parts:** Reuse any suitable parts, dispose of the remainder in ordinary waste.
- **Metals:** Can be sold if separate from general waste.
- **Tyres:** Keep separate and dispose of to specialist contractor. DO NOT attempt to dispose of tyres by burning.
- **Components/materials containing asbestos:** Keep separate and dispose of to specialist contractor.

- **Oil and fuel wastes (e.g. rags, used spill kit material):** Keep separate and dispose of to specialist contractors.
- **Air filters:** Keep separate and dispose of to specialist contractors.
- **Rubber/plastics:** Dispose of in ordinary waste.
- **Hoses:** Dispose of in ordinary waste.
- **Batteries:** Keep separate and dispose of to specialist contractors.
- **Air bags - DANGER EXPLOSIVES:** Keep separate and dispose of to specialist contractors.
- **Electrical components:** Return to supplier for refurbishment or disassemble and reuse any suitable components. Dispose of remainder in ordinary waste.
- **Catalytic converters:** May be sold if kept separate from general waste.
- **Packaging:** Compact/recycle as much as possible and dispose of in ordinary waste.
- **Office/paper waste:** Recycle paper and toner and ink cartridges, dispose of remainder in ordinary waste.

NOISE

Car alarm testing, panel beating, running engines, using air tools etc. are operations which invariably produce a large amount of noise. The location of such activities and also the time of day must be carefully considered having regard to the proximity of houses schools etc.

Some operations may produce high noise levels which could, in time, damage hearing. In these cases, suitable ear protection must be worn.

SOLDER

Solders are mixtures of metals such that the melting point of the mixture is below that of the constituent metals (normally lead and tin). Solder application does not normally give rise to toxic lead fumes, provided a gas/air flame is used. Oxy-acetylene flames should not be used, as they are much hotter and will cause lead fumes to be produced.

Some fumes may be produced by the application of any flame to surfaces coated with grease, and inhalation of these should be avoided.

Removal of excess solder should be undertaken with care, to make sure that fine lead dust is not produced, which can give toxic effects if inhaled. Respiratory protection may be necessary.

Solder spillage and filings should be collected and removed promptly to prevent general air contamination by lead.

High standards of personal hygiene are necessary in order to avoid ingestion of lead or inhalation of solder dust from clothing.

SOLVENTS

For example acetone, white spirit, toluene, xylene, trichloroethane.

Used in cleaning and dewaxing materials, paints, plastics, resins and thinners.

Some may be highly flammable or flammable.

Skin contact will degrease the skin and may result in irritation and dermatitis following repeated or prolonged contact. Some can be absorbed through the skin in toxic or harmful quantities.

Splashes in the eye may cause severe irritation and could lead to loss of vision.

Brief exposure of high concentrations of vapors or mists will cause eye and throat irritation, drowsiness, dizziness, headaches and, in the worst circumstances, unconsciousness.

Repeated or prolonged exposure to excessive but lower concentrations of vapors or mists, for which there might not be adequate warning indications, can cause more serious toxic or harmful effects.

Aspiration into the lungs, for example through vomiting, is the most serious consequence of swallowing.

Avoid splashes to the skin, eyes and clothing. Wear protective gloves, goggles and clothing if necessary.

Make sure there is good ventilation when in use, avoid breathing fumes, vapors and spray mists and keep containers tightly sealed. Do not use in confined spaces.

When spraying materials containing solvents, for example paints, adhesives, and metal coatings, use extraction ventilation or personal respiratory protection in the absence of adequate general ventilation.

Do not apply heat or flame except under specific and detailed manufacturers instructions.

SUSPENDED LOADS

CAUTION:

Never improvise lifting tackle.

There is always a danger when loads are lifted or suspended. Never work under an unsupported, suspended or raised load, for example a suspended engine.

Always make sure that lifting equipment such as jacks, hoists, axle stands and slings are adequate and suitable for the job, in good condition and regularly maintained.

VITON

In common with many other manufacturers vehicles, some components installed to Land Rover vehicles have seals, 'O' rings or gaskets which contain a material known as 'Viton'.

Viton is a fluoroelastomer, that is a synthetic rubber type which contains Fluorine. Although Viton is the most well known fluoroelastomer, there are others, including Fluorel and Tecmoflon.

When used under design conditions fluoroelastomers are perfectly safe. If, however, they are exposed to temperatures in excess of 400°C, the material will not burn, but will decompose, and one of the products formed is hydrofluoric acid.

This acid is extremely corrosive and may be absorbed directly, through contact, into the general body system. **WHERE CASES OF SKIN CONTACT OCCUR, SEEK IMMEDIATE MEDICAL HELP.**

O-rings, seals or gaskets which have been exposed to very high temperatures will appear charred or as a black sticky substance.

DO NOT, under any circumstances touch them or the attached components.

Enquiries should be made to determine whether Viton or any other fluoroelastomer has been used in the affected O-ring, seal or gasket. If they are of natural rubber or nitrile there is no hazard. If in doubt, be cautious as the material may be Viton or any fluoroelastomer.

If Viton or any other fluoroelastomers have been used, the affected area should be decontaminated before the commencement of work.

Disposable heavy duty plastic gloves should be worn at all times, and the affected area washed down using wire wool and a limewater (calcium hydroxide) solution to neutralise the acid before disposing of the decomposed Viton residue and final cleaning of the area. After use, the plastic gloves should be discarded carefully and safely.

WELDING

CAUTION:

Some of the components installed to the vehicle e.g. the interior cross beam and under bonnet cross member are manufactured from magnesium alloy. On no account should any welding operations be attempted on these components.

Welding processes include Resistance Welding (Spot Welding), Arc Welding and Metal Active Gas (MAG) Welding for Steel vehicles, Metal Inert Gas (MIG) for Aluminum vehicles.

RESISTANCE WELDING

This process may cause particles of molten metal to be emitted at a high velocity, and the eyes and skin must be protected.

ARC WELDING

This process emits a high level of ultra-violet radiation which may cause arc-eye and skin burns to the operator and to other persons nearby. Gas-shielded welding processes are particularly hazardous in this respect. Personal protection must be worn, and screens used to shield other people.

CONTACT LENS WEARERS ARE ADVISED TO REVERT TO ORDINARY SPECTACLES WHEN ARC WELDING as the arc spectrum is believed to emit microwaves which dry out the fluid between the lens and the eye. This may result in blindness when the lens is removed from the eye.

Metal spatter will also occur, and appropriate eye and skin protection is necessary.

The heat of the welding arc will produce fumes and gases from the metals being welded, the rods and from any applied coatings or contamination on the surfaces being worked on. These gases and fumes may be toxic and inhalation of these should be avoided. The use of extraction ventilation to remove the fumes from the

working area may be necessary particularly in cases where the general ventilation is poor, or where considerable welding work is anticipated. In extreme cases or confined spaces where adequate ventilation cannot be provided, air-fed respirators may be necessary.

SPECIAL PRECAUTIONS MUST BE TAKEN BEFORE ANY WELDING OR CUTTING TAKES PLACE ON VESSELS WHICH HAVE CONTAINED COMBUSTIBLE MATERIALS, FOR EXAMPLE BOILING OR STEAMING OUT OF FUEL TANKS.

WARNING SYMBOLS ON VEHICLES

Decals showing warning symbols will be found on various vehicle components.

These decals must not be removed. The warnings are for the attention of owners/operators and persons carrying out service or repair operations on the vehicle.

GENERAL INFORMATION

DESCRIPTION AND OPERATION

IMAGE PROCESSING MODULE B (IPMB)

CAUTION:

Diagnosis by substitution from a donor vehicle is **NOT** acceptable. Substitution of control modules does not guarantee confirmation of a fault, and may also cause additional faults in the vehicle being tested and/or the donor vehicle

NOTES:

- If the control module or a component is suspect and the vehicle remains under manufacturer warranty, refer to the warranty policy and procedures manual, or determine if any prior approval programme is in operation, prior to the installation of a new module/component
- Generic scan tools may not read the codes listed, or may read only 5-digit codes. Match the 5 digits from the scan tool to the first 5 digits of the 7-digit code listed to identify the fault (the last 2 digits give extra information read by the manufacturer-approved diagnostic system)
- When performing voltage or resistance tests, always use a digital multimeter accurate to three decimal places and with a current calibration certificate. When testing resistance, always take the resistance of the digital multimeter leads into account
- Check and rectify basic faults before beginning diagnostic routines involving pinpoint tests
- Inspect connectors for signs of water ingress, and pins for damage and/or corrosion
- If diagnostic trouble codes are recorded and, after performing the pinpoint tests, a fault is not present, an intermittent concern may be the cause. Always check for loose connections and corroded terminals
- Where an 'on demand self-test' is referred to, this can be accessed via the 'diagnostic trouble code monitor' tab on the manufacturers approved diagnostic system
- Check DDW for open campaigns. Refer to the corresponding bulletins and SSMs which may be valid for the specific customer complaint and carry out the recommendations as required

The table below lists all Diagnostic Trouble Codes (DTCs) that could be logged in the Image Processing Module B, for additional Diagnosis and Testing information refer to the relevant Diagnosis and Testing Section. For additional information, refer to: Information and Entertainment System (415-00 Information and Entertainment System - General Information, Diagnosis and Testing).

DTC	DESCRIPTION	POSSIBLE CAUSES	ACTION
B100E-29	Video Input "A" signal - Signal invalid	■ Video output connection error ■ Video output line short or open circuit	■ Refer to the electrical circuit diagrams and check the circuit between the proximity cameras and the touch screen
B1087-00	LIN Bus "A" - No sub type information	■ LIN bus error	■ Refer to the electrical circuit diagrams and check the LIN circuit between the proximity cameras and the proximity camera control module
B12BD-19	Rear Camera - Circuit current above threshold	■ Rear proximity camera circuit current above threshold ■ Rear proximity camera is drawing little or no current, indicating an open circuit fault or disconnected camera	NOTE: When checking LVDS circuits, DO NOT probe the LVDS cables. Visual checks ONLY should be performed at the cable inter-connect points ■ Refer to the electrical circuit diagrams and check the rear proximity camera circuit for short to power, open circuit, high resistance
B12BD-31	Rear Camera - No signal	■ Rear proximity camera circuit fault	NOTE:

		■ Rear proximity camera faulty	When checking LVDS circuits, DO NOT probe the LVDS cables. Visual checks ONLY should be performed at the cable inter-connect points ■ Refer to the electrical circuit diagrams and check the rear proximity camera circuit for open circuit
B12BD-49	Rear Camera - Internal electronic failure	■ Rear proximity camera internal electronic failure	■ Clear DTC, wait for a minimum of 2 minutes, then retest ■ If fault persists, check and install a new rear proximity camera as required
B12BD-54	Rear Camera - Missing calibration	■ Rear proximity camera not calibrated ■ Rear proximity camera not installed correctly	■ Using the manufacturer approved diagnostic system calibrate the rear proximity camera ■ Check the rear proximity camera is fitted and aligned correctly
B12BE-19	Left Front Camera - Circuit current above threshold	■ Front left proximity camera circuit current above threshold ■ Front left proximity camera is drawing little or no current, indicating an open circuit fault or disconnected camera	△ NOTE: When checking LVDS circuits, DO NOT probe the LVDS cables. Visual checks ONLY should be performed at the cable inter-connect points ■ Refer to the electrical circuit diagrams and check the front left proximity camera circuit for short to power, open circuit, high resistance
B12BE-	Left Front		△

31	Camera - No signal	■ Front left proximity camera circuit fault ■ Front left proximity camera faulty	**NOTE:** When checking LVDS circuits, DO NOT probe the LVDS cables. Visual checks ONLY should be performed at the cable inter-connect points ■ Refer to the electrical circuit diagrams and check the front left proximity camera circuit for open circuit
B12BE-49	Left Front Camera - Internal electronic failure	■ Front left proximity camera internal electronic failure	■ Clear DTC, wait for a minimum of 2 minutes, then retest ■ If fault persists, check and install a new front left proximity camera as required
B12BE-54	Left Front Camera - Missing calibration	■ Front left proximity camera not calibrated ■ Front left proximity camera not installed correctly	■ Using the manufacturer approved diagnostic system calibrate the front left proximity camera ■ Check the front left proximity camera is fitted and aligned correctly
B12BF-19	Right Front Camera - Circuit current above threshold	■ Front right proximity camera circuit current above threshold ■ Front right proximity camera is drawing little or no current, indicating an open circuit fault or disconnected camera	**NOTE:** When checking LVDS circuits, DO NOT probe the LVDS cables. Visual checks ONLY should be performed at the cable inter-connect points ■ Refer to the electrical circuit diagrams and check the front right proximity camera circuit for short to power, open circuit, high resistance

B12BF-31	Right Front Camera - No signal	■ Front right proximity camera circuit fault ■ Front right proximity camera faulty	**NOTE:** When checking LVDS circuits, DO NOT probe the LVDS cables. Visual checks ONLY should be performed at the cable inter-connect points ■ Refer to the electrical circuit diagrams and check the front right proximity camera circuit for open circuit
B12BF-49	Right Front Camera - Internal electronic failure	■ Front right proximity camera internal electronic failure	■ Clear DTC, wait for a minimum of 2 minutes, then retest ■ If fault persists, check and install a new front right proximity camera as required
B12BF-54	Right Front Camera - Missing calibration	■ Front right proximity camera not calibrated ■ Front right proximity camera not installed correctly	■ Using the manufacturer approved diagnostic system calibrate the front right proximity camera ■ Check the front right proximity camera is fitted and aligned correctly
B12C0-19	Left Mirror Camera - Circuit current above threshold	■ Left mirror proximity camera circuit current above threshold ■ Left mirror proximity camera is drawing little or no current,	**NOTE:** When checking LVDS circuits, DO NOT probe the LVDS cables. Visual checks ONLY should be performed at the cable inter-connect points

		indicating an open circuit fault or disconnected camera	■ Refer to the electrical circuit diagrams and check the left mirror proximity camera circuit for short to power, open circuit, high resistance
B12C0-31	Left Mirror Camera - No signal	■ Left mirror proximity camera circuit fault ■ Left mirror proximity camera faulty	**NOTE:** When checking LVDS circuits, DO NOT probe the LVDS cables. Visual checks ONLY should be performed at the cable inter-connect points ■ Refer to the electrical circuit diagrams and check the left mirror proximity camera circuit for open circuit
B12C0-49	Left Mirror Camera - Internal electronic failure	■ Left mirror proximity camera internal electronic failure	■ Clear DTC, wait for a minimum of 2 minutes, then retest ■ If fault persists, check and install a new left mirror proximity camera as required
B12C0-54	Left Mirror Camera - Missing calibration	■ Left mirror proximity camera not calibrated ■ Left mirror proximity camera not installed correctly	■ Using the manufacturer approved diagnostic system calibrate the left mirror proximity camera ■ Check the left mirror proximity camera is fitted and aligned correctly
B12C1-19	Right Mirror Camera - Circuit current above threshold	■ Right mirror proximity camera circuit current above threshold	**NOTE:**

		■ Right mirror proximity camera is drawing little or no current, indicating an open circuit fault or disconnected camera	When checking LVDS circuits, DO NOT probe the LVDS cables. Visual checks ONLY should be performed at the cable inter-connect points ■ Refer to the electrical circuit diagrams and check the right mirror proximity camera circuit for short to power, open circuit, high resistance
B12C1-31	Right Mirror Camera - No signal	■ Right mirror proximity camera circuit fault ■ Right mirror proximity camera faulty	△ NOTE: When checking LVDS circuits, DO NOT probe the LVDS cables. Visual checks ONLY should be performed at the cable inter-connect points ■ Refer to the electrical circuit diagrams and check the right mirror proximity camera circuit for open circuit
B12C1-49	Right Mirror Camera - Internal electronic failure	■ Right mirror proximity camera internal electronic failure	■ Clear DTC, wait for a minimum of 2 minutes, then retest ■ If fault persists, check and install a new right mirror proximity camera as required
B12C1-54	Right Mirror Camera - Missing calibration	■ Right mirror proximity camera not calibrated ■ Right mirror proximity camera not installed correctly	■ Using the manufacturer approved diagnostic system calibrate the right mirror proximity camera ■ Check the right mirror proximity camera is fitted and aligned correctly

P1603-00	EEPROM Malfunction - No sub type information	■ Proximity camera control module internal memory error	■ Clear DTC, wait for a minimum of 2 minutes, then retest. If fault persists, check and install a new proximity camera control module as required
U0010-88	Medium Speed CAN Communication Bus - Bus off	■ Bus off	■ Refer to the electrical circuit diagrams and check CAN private network for short, open circuit. Carry out CAN network integrity tests using the manufacturer approved diagnostic system. Refer to the network communications section of the workshop manual
U0300-00	Internal Control Module Software Incompatibility - No sub type information	■ Incorrect software loaded ■ Lost CAN signal	■ Check for other modules reporting CAN bus off or lost communication faults. If other modules report problems, check the software version in the central junction box using the manufacturers approved diagnostic system. If no other modules report problems, check the software version in the park distance control module. Update as necessary
U1A4B-49	Control Module Processor B - Internal electronic failure	■ Internal electronic failure	■ Clear DTC, wait for a minimum of 2 minutes, then retest. If the DTC resets, renew the proximity camera control module
U201A-51	Control Module Main Calibration Data - Not programmed	■ Local config /calibration file missing/invalid (LCF)	■ Configure the proximity camera control module using the approved diagnostic system
U3000-46	Control Module - Calibration / parameter memory failure	■ Internal memory error	■ Clear DTC, wait for a minimum of 2 minutes, then retest. If the DTC resets, renew the proximity camera control module
U3000-	Control Module		

47	- Watchdog / safety MicroController failure	■ Watchdog/safety MicroController failure	■ Clear DTC, wait for a minimum of 2 minutes, then retest. If the DTC resets, renew the proximity camera control module
U3000-49	Control Module - Internal electronic failure	■ Internal memory error	■ Clear DTC, wait for a minimum of 2 minutes, then retest. If the DTC resets, renew the proximity camera control module
U3000-98	Control Module - Component or system over temperature	■ Component or system over temperature	■ Consider the environmental conditions before suspecting the proximity camera control module. Allow the proximity camera control module to cool, clear DTC, wait for a minimum of 2 minutes, then retest
U3003-62	Battery Voltage - Signal compare failure	■ Signal compare failure	■ Check vehicle battery connections and charging system. Refer to the relevant section in the workshop manual. Refer to the electrical circuit diagrams and check the power supply circuits to the proximity camera control module

2012.0 RANGE ROVER (LM), 100-00

GENERAL INFORMATION

DESCRIPTION AND OPERATION

INSTRUMENT PANEL CLUSTER (IPC)

CAUTION:

Diagnosis by substitution from a donor vehicle is **NOT** acceptable. Substitution of control modules does not guarantee confirmation of a fault, and may also cause additional faults in the vehicle being tested and/or the donor vehicle

NOTES:

- If the control module or a component is suspect and the vehicle remains under manufacturer warranty, refer to the warranty policy and procedures manual, or determine if any prior approval programme is in operation, prior to the installation of a new module/component
- Generic scan tools may not read the codes listed, or may read only 5-digit codes. Match the 5 digits from the scan tool to the first 5 digits of the 7-digit code listed to identify the fault (the last 2 digits give extra information read by the manufacturer-approved diagnostic system)
- When performing voltage or resistance tests, always use a digital multimeter accurate to three decimal places and with a current calibration certificate. When testing resistance, always take the resistance of the digital multimeter leads into account
- Check and rectify basic faults before beginning diagnostic routines involving pinpoint tests
- Inspect connectors for signs of water ingress, and pins for damage and/or corrosion
- If diagnostic trouble codes are recorded and, after performing the pinpoint tests, a fault is not present, an intermittent concern may be the cause. Always check for loose connections and corroded terminals
- Where an 'on demand self-test' is referred to, this can be accessed via the 'diagnostic trouble code monitor' tab on the manufacturers approved diagnostic system
- Check DDW for open campaigns. Refer to the corresponding bulletins and SSMs which may be valid for the specific customer complaint and carry out the recommendations as required

The table below lists all Diagnostic Trouble Codes (DTCs) that could be logged in the Instrument Panel Cluster (IPC), for additional Diagnosis and Testing information refer to the relevant Diagnosis and Testing Section. For additional information, refer to: Instrument Cluster (413-01 Instrument Cluster, Diagnosis and Testing).

DTC	DESCRIPTION	POSSIBLE CAUSES	ACTION
B1009-51	Ignition Authorisation - Not programmed	■ Ignition authorisation not programmed	■ Configure the Instrument Panel Cluster (IPC) using the manufacturers approved diagnostic system
B1009-87	Ignition Authorisation - Missing message	■ Ignition authorisation message missing	■ Configure the Instrument Panel Cluster (IPC) using the manufacturers approved diagnostic system
B100D-64	Column Lock Authorisation - Signal plausibility failure	■ Steering Column Lock system /Steering Column Lock unable to perform lock action ■ CAN Fault ■ Anti-Lock Braking System (ABS), Engine Control Module	**NOTE:** Prior to clearing this DTC, carry out the 'Vehicle Functional Reset' application using the manufacturer approved diagnostic system. ■ Check the serviceability of the steering column and lock. Clear the DTC and retest. If the problem persists, carry out CAN Network Integrity test and Module Self Test using the manufacturer approved diagnostic system. Refer to the electrical circuit diagrams and check CAN network

		(ECM), Central Junction Box (CJB) fault	
B1026-12	Steering Column Lock - Circuit short to battery	■ Electric Steering Column Lock (ESCL) circuit short to power	■ Refer to the wiring diagrams and check the electric steering column ground circuit
B108E-13	Display - Circuit open	■ Instrument Panel Cluster (IPC) display connector fails continuity check ■ Continuity circuit in display flex cable open circuit	■ Renew the Instrument Panel Cluster (IPC). Refer to the Warranty Policy and Procedures manual, or determine if any prior approval programme is in operation, prior to the installation of a new module/component
B10B7-86	Rear Air Discharge Temperature - Signal invalid	■ Display illumination area temperature sensor signal is out of range	■ Check the harness connector to the Instrument Panel Cluster (IPC) for security and integrity. Clear the DTC and retest the switch function. If the problem persists, renew the Instrument Panel Cluster (IPC). Refer to the Warranty Policy and Procedures manual, or determine if any prior approval programme is in operation, prior to the installation of a new module/component
B115C-7A	Transfer Fuel Pump - Fluid leak or seal failure	■ Transfer fuel pump fault ■ Fluid leak or seal failure	■ Check for other fuel pump related DTCs. Renew the transfer fuel (jet) pump

B1264-13	Control Module Connector(s) Loose Or Disconnected - Circuit open	■ Display not adequately connected to Instrument Panel Cluster (IPC) circuit board	■ Suspect the Instrument Panel Cluster (IPC), install a new Instrument Panel Cluster (IPC) as necessary. Refer to the Warranty Policy and Procedures manual, or determine if any prior approval programme is in operation, prior to the installation of a new module/component
B1264-49	Control Module Connector(s) Loose Or Disconnected - Internal electronic failure	■ Airbag telltale not adequately connected to Instrument Panel Cluster (IPC) circuit board	■ Suspect the Instrument Panel Cluster (IPC), install a new Instrument Panel Cluster (IPC) as necessary. Refer to the Warranty Policy and Procedures manual, or determine if any prior approval programme is in operation, prior to the installation of a new module/component
B1264-95	Control Module Connector(s) Loose Or Disconnected - Incorrect assembly	■ Security telltale not adequately connected to Instrument Panel Cluster (IPC) circuit board	■ Suspect the Instrument Panel Cluster (IPC), install a new Instrument Panel Cluster (IPC) as necessary. Refer to the Warranty Policy and Procedures manual, or determine if any prior approval programme is in operation, prior to the installation of a new module/component
B12FE-09	Fan - Component Failures	■ Cooling fan is stalled/not running at full speed	■ Check for foul condition at fan
B12FE-12	Fan - Circuit short to battery	■ Cooling fan ground cannot	■ Refer to the electrical circuit diagrams and check cooling fan ground circuit for short to power

		be applied. Short to power	
B12FE-13	Fan - Circuit open	■ Cooling fan ground cannot be applied. Open circuit	■ Refer to the electrical circuit diagrams and check cooling fan ground for broken wire, open circuit
B1A14-96	RCM Warning Lamp - Component internal failure	■ SRS LED failure ■ Warning lamp circuit fault	■ Check the harness connector to the Instrument Panel Cluster (IPC) for security and integrity. Clear the DTC and retest the switch function. If the problem persists, renew the Instrument Panel Cluster (IPC). Refer to the Warranty Policy and Procedures manual, or determine if any prior approval programme is in operation, prior to the installation of a new module/component
B1A68-86	Ambient Temperature Sensor - Signal invalid	■ Internal board temperature sensor signal is out of range /invalid	■ Check the harness connector to the Instrument Panel Cluster (IPC) for security and integrity. Clear the DTC and retest the switch function. If the problem persists, renew the Instrument Panel Cluster (IPC). Refer to the Warranty Policy and Procedures manual, or determine if any prior approval programme is in operation, prior to the installation of a new module/component
B1A85-96	Ambient Light Sensor - Component internal failure	■ Internal light sensor failure	■ Check the harness connector to the Instrument Panel Cluster (IPC) for security and integrity. Clear the DTC and retest the switch function. If the problem persists, renew the Instrument Panel Cluster (IPC). Refer to the Warranty Policy and Procedures manual, or determine if any prior approval programme is in operation, prior to the installation of a new module/component
P0607-4B	Control Module Performance - Over temperature		■ Check the cluster cooling fan/circuit and rectify as necessary. Clear the DTC and retest

		■ Instrument Panel Cluster (IPC) over temperature	
P060A-08	Internal Control Module Monitoring Processor Performance - Bus Signal /Message Failures	■ Internal communication errors are causing lock-ups and resets	■ Suspect the Instrument Panel Cluster (IPC). Refer to the Warranty Policy and Procedures manual, or determine if any prior approval programme is in operation, prior to the installation of a new module/component
P0610-55	Control Module Vehicle Options Error - Not configured	■ Control module incorrectly configured	■ Configure the module using the manufacturers approved diagnostic system
U0001-88	High Speed CAN Communication Bus - Bus off	■ CAN Bus off	■ Refer to the electrical circuit diagrams and check the power and ground connections to the module. Using the manufacturer approved diagnostic system, complete a CAN network integrity test. Refer to the electrical circuit diagrams and check the CAN network
U0010-88	Medium Speed CAN Communication Bus - Bus off	■ Bus off	■ Carry out the CAN Network Integrity Test using the Manufacturer approved diagnostic system. Alternatively, refer to the electrical circuit diagrams and check CAN network to Instrument Panel Cluster (IPC)
U0100-00	Lost Communication With ECM/PCM "A" - No sub type information	■ No sub type information	■ Refer to the electrical circuit diagrams and check the power and ground connections to the module. Using the manufacturer approved diagnostic system, complete a CAN network integrity test. Refer to the electrical circuit diagrams and check the CAN network between the Engine Control Module and Instrument Panel Cluster (IPC)

U0101-00	Lost Communication with TCM - No sub type information	■ No sub type information	■ Refer to the electrical circuit diagrams and check the power and ground connections to the module. Using the manufacturer approved diagnostic system, complete a CAN network integrity test. Refer to the electrical circuit diagrams and check the CAN network between the Transmission Control Module and Instrument Panel Cluster (IPC)
U0102-00	Lost Communication with Transfer Case Control Module - No sub type information	■ No sub type information	■ Refer to the electrical circuit diagrams and check the power and ground connections to the module. Using the manufacturer approved diagnostic system, complete a CAN network integrity test. Refer to the electrical circuit diagrams and check the CAN network between the Transfer Case Control Module and Instrument Panel Cluster (IPC)
U0104-00	Lost Communication With Cruise Control Module - No sub type information	■ No sub type information	Refer to the electrical circuit diagrams and check the power and ground connections to the module. Using the manufacturer approved diagnostic system, complete a CAN network integrity test. Refer to the electrical circuit diagrams and check the CAN network between the Speed Control Module and Instrument Panel Cluster (IPC)
U0121-00	Lost Communication With Anti-Lock Brake System (ABS) Control Module - No sub type information	■ No sub type information	■ Refer to the electrical circuit diagrams and check the power and ground connections to the module. Using the manufacturer approved diagnostic system, complete a CAN network integrity test. Refer to the electrical circuit diagrams and check the CAN network between the Anti-lock Braking System Module and Instrument Panel Cluster (IPC)
U0126-00	Lost Communication With Steering Angle Sensor Module - No sub type information	■ Power or ground circuit fault ■ CAN Bus circuit fault	■ Refer to the electrical circuit diagrams and check the power, ground and CAN Bus circuit to the steering angle sensor for fault. Using the manufacturer approved diagnostic system, complete a CAN network integrity test

		■ Module internal failure	
U0128-00	Lost Communication With Park Brake Control Module - No sub type information	■ No sub type information	■ Refer to the electrical circuit diagrams and check the power and ground connections to the module. Using the manufacturer approved diagnostic system, complete a CAN network integrity test. Refer to the electrical circuit diagrams and check the CAN network between the Parking Brake Module and Instrument Panel Cluster (IPC)
U0132-00	Lost Communication With Suspension Control Module "A" - no sub type information	■ Power or ground circuit fault ■ CAN Bus circuit fault ■ Module internal failure	■ Refer to the electrical circuit diagrams and check the power, ground and CAN Bus circuits to the air suspension module. Using the manufacturer approved diagnostic system, complete a CAN network integrity test
U0136-00	Lost Communication With Differential Control Module - Rear - No sub type information	■ No sub type information	■ Refer to the electrical circuit diagrams and check the power and ground connections to the module. Using the manufacturer approved diagnostic system, complete a CAN network integrity test. Refer to the electrical circuit diagrams and check the CAN network between the Rear Differential Control Module and Instrument Panel Cluster (IPC)
U0138-00	Lost Communication with All Terrain Control Module - No sub type information	■ No sub type information	■ Refer to the electrical circuit diagrams and check the power and ground connections to the module. Using the manufacturer approved diagnostic system, complete a CAN network integrity test. Refer to the electrical circuit diagrams and check the CAN network between the Terrain Response Control Module and Instrument Panel Cluster (IPC)
U0139-	Lost		

08	Communication With Suspension Control Module "B" - Bus Signal /Message Failures	■ Bus signal /message failures	■ Refer to the electrical circuit diagrams and check the power and ground connections to the module. Using the manufacturer approved diagnostic system, complete a CAN network integrity test. Refer to the electrical circuit diagrams and check the CAN network between the Suspension Control Module and Instrument Panel Cluster (IPC)
U0140-00	Lost Communication With Body Control Module - No sub type information	■ No sub type information	■ Refer to the electrical circuit diagrams and check the power and ground connections to the module. Using the manufacturer approved diagnostic system, complete a CAN network integrity test. Refer to the electrical circuit diagrams and check the CAN network between the Central Junction Box and Instrument Panel Cluster (IPC)
U0141-00	Lost Communication With Body Control Module "A" - no sub type information	■ Power or ground circuit fault ■ CAN Bus circuit fault ■ Module internal failure	■ Refer to the electrical circuit diagrams and check the power, ground and CAN Bus circuit to the body control module for fault. Using the manufacturer approved diagnostic system, complete a CAN network integrity test
U0151-00	Lost Communication With Restraints Control Module - No sub type information	■ No sub type information	■ Refer to the electrical circuit diagrams and check the power and ground connections to the module. Using the manufacturer approved diagnostic system, complete a CAN network integrity test. Refer to the electrical circuit diagrams and check the CAN network between the Restraints Control Module and Instrument Panel Cluster (IPC)
U0159-00	Lost Communication With Parking Assist Control Module "A" - No	■ CAN Link Instrument Panel Cluster (IPC) /parking aid module	Refer to the electrical circuit diagrams and check the power and ground connections to the module. Using the manufacturer approved diagnostic system, complete a CAN network integrity test. Refer to the electrical circuit diagrams and check the CAN network between the Parking Aid Module (PAM) and Instrument Panel Cluster (IPC)

	sub type information	missing message	
U0164-00	Lost Communication With HVAC Control Module - No sub type information	■ CAN Link Instrument Panel Cluster (IPC)/HVAC module missing message	■ Refer to the electrical circuit diagrams and check the power and ground connections to the module. Using the manufacturer approved diagnostic system, complete a CAN network integrity test. Refer to the electrical circuit diagrams and check the CAN network between the Climate Control Module and Instrument Panel Cluster (IPC)
U0184-00	Lost Communication With Radio - no sub type information	■ Power or ground circuit fault ■ CAN Bus circuit fault ■ Module internal failure	■ Refer to the electrical circuit diagrams and check the power, ground and CAN Bus circuit to the audio head unit for fault. Using the manufacturer approved diagnostic system, complete a CAN network integrity test
U0208-00	Lost Communication With "Seat Control Module A" - No sub type information	■ No sub type information	■ Refer to the electrical circuit diagrams and check the power and ground connections to the module. Using the manufacturer approved diagnostic system, complete a CAN network integrity test. Refer to the electrical circuit diagrams and check the CAN network between the Seat Control Module and Instrument Panel Cluster (IPC)
U0214-00	Lost Communication With Remote Function Actuation - No sub type information	■ No sub type information	■ Refer to the electrical circuit diagrams and check the power and ground connections to the module. Using the manufacturer approved diagnostic system, complete a CAN network integrity test. Refer to the electrical circuit diagrams and check the CAN network between the Remote Function Actuation Module and Instrument Panel Cluster (IPC)

U0232-00	Lost Communication With Side Obstacle Detection Control Module - Left - No sub type information	■ No sub type information	■ Refer to the electrical circuit diagrams and check the power and ground connections to the module. Using the manufacturer approved diagnostic system, complete a CAN network integrity test. Refer to the electrical circuit diagrams and check the CAN network between the Side Object Detection module and Instrument Panel Cluster (IPC)
U0241-00	Lost Communication With Headlamp Control Module "A" - No sub type information	■ No sub type information	■ Refer to the electrical circuit diagrams and check the power and ground connections to the module. Using the manufacturer approved diagnostic system, complete a CAN network integrity test. Refer to the electrical circuit diagrams and check the CAN network between the Headlamp Control Module and Instrument Panel Cluster (IPC)
U0242-00	Lost Communication With Headlamp Control Module "B" - No sub type information	■ No sub type information	■ Refer to the electrical circuit diagrams and check the power and ground connections to the module. Using the manufacturer approved diagnostic system, complete a CAN network integrity test. Refer to the electrical circuit diagrams and check the CAN network between the Headlamp Control Module and Instrument Panel Cluster (IPC)
U0264-00	Lost Communication With Camera Module- Rear - no sub type information	■ Power or ground circuit fault ■ CAN Bus circuit fault ■ Module internal failure	■ Refer to the electrical circuit diagrams and check the power, ground and CAN Bus circuit to the rear view camera for fault. Using the manufacturer approved diagnostic system, complete a CAN network integrity test
U0300-00	Internal Control Module Software	■ No sub type information	■ Check for other modules reporting CAN Bus off or lost communication faults. If other modules report problems, check the software version in

	Incompatibility - No sub type information		the Central Junction Box using the manufacturers approved diagnostic system. If no other modules report problems, check the software version in the Instrument Panel Cluster (IPC). Update/configure as necessary
U0402-68	Invalid Data Received from TCM - Event information	■ Event information	■ Check for the Transmission Control Module (TCM) for related DTCs. Refer to relevant DTC index
U2013-02	Switch Pack - General signal failure	■ General signal failure	■ Refer to the electrical circuit diagrams and check the LIN bus circuit
U2013-08	Switch Pack - Bus Signal/Message Failures	■ General signal failure	■ Refer to the electrical circuit diagrams and check the LIN bus circuit
U3000-46	Control Module - Calibration /parameter memory failure	■ Odometer reading on cluster is missing or incorrect - calibration / parameter memory failure	■ Check the harness connector to the Instrument Panel Cluster (IPC) for security and integrity. Clear the DTC and retest. If the problem persists, renew the Instrument Panel Cluster (IPC). Refer to the Warranty Policy and Procedures manual, or determine if any prior approval programme is in operation, prior to the installation of a new module/component
U3000-49	Control Module - Internal electronic failure	■ Internal electronic failure	■ Check the harness connector to the Instrument Panel Cluster (IPC) for security and integrity. Clear the DTC and retest. If the problem persists, renew the Instrument Panel Cluster (IPC). Refer to the Warranty Policy and Procedures manual, or determine if any prior approval programme is in operation, prior to the installation of a new module/component
U3000-55	Control Module - Not configured	■ Speedometer is inaccurate	

		■ Tire size compensation is incorrectly configured	■ Using the manufacturer approved diagnostic system select the vehicle configuration main menu, select configure existing modules menu and program the module
U3000-87	Control Module - Missing message	■ Car configuration file missing message	■ Configure the Car Configuration File (CCF) using the approved diagnostic system
U3002-81	Vehicle Identification Number - Invalid serial data received	■ Invalid vehicle identification number	■ Configure the Car Configuration File (CCF) using the approved diagnostic system
U3003-16	Control Module - Circuit voltage below threshold	■ Circuit voltage below threshold (9V)	■ Check vehicle battery and charging system. Refer to the relevant section in the workshop manual. Refer to the electrical circuit diagrams and check the power supply circuits to the module
U3003-17	Control Module - Circuit voltage above threshold	■ Circuit voltage above threshold (16V)	■ Check vehicle battery and charging system. Refer to the relevant section in the workshop manual. Refer to the electrical circuit diagrams and check the power supply circuits to the module
U3003-62	Control Module - Signal compare failure	■ Signal compare failure	■ Check vehicle battery and charging system. Refer to the relevant section in the workshop manual. Refer to the electrical circuit diagrams and check the power supply circuits to the module

GENERAL INFORMATION

DESCRIPTION AND OPERATION

ADAPTIVE DAMPING CONTROL MODULE (SUMB)

CAUTION:

Diagnosis by substitution from a donor vehicle is **NOT** acceptable. Substitution of control modules does not guarantee confirmation of a fault, and may also cause additional faults in the vehicle being tested and/or the donor vehicle

NOTES:

- If the control module or a component is suspect and the vehicle remains under manufacturer warranty, refer to the warranty policy and procedures manual, or determine if any prior approval programme is in operation, prior to the installation of a new module/component
- Generic scan tools may not read the codes listed, or may read only 5-digit codes. Match the 5 digits from the scan tool to the first 5 digits of the 7-digit code listed to identify the fault (the last 2 digits give extra information read by the manufacturer-approved diagnostic system)
- When performing voltage or resistance tests, always use a digital multimeter accurate to three decimal places and with a current calibration certificate. When testing resistance, always take the resistance of the digital multimeter leads into account
- Check and rectify basic faults before beginning diagnostic routines involving pinpoint tests
- Inspect connectors for signs of water ingress, and pins for damage and/or corrosion
- If diagnostic trouble codes are recorded and, after performing the pinpoint tests, a fault is not present, an intermittent concern may be the cause. Always check for loose connections and corroded terminals
- Where an 'on demand self-test' is referred to, this can be accessed via the 'diagnostic trouble code monitor' tab on the manufacturers approved diagnostic system
- Check DDW for open campaigns. Refer to the corresponding bulletins and SSMs which may be valid for the specific customer complaint and carry out the recommendations as required

The table below lists all Diagnostic Trouble Codes (DTCs) that could be logged in the Adaptive Damping Control Module, for additional Diagnosis and Testing information refer to the relevant Diagnosis and Testing Section

For additional information, refer to: Vehicle Dynamic Suspension (204-05 Vehicle Dynamic Suspension, Diagnosis and Testing).

DTC	DESCRIPTION	POSSIBLE CAUSES	ACTION
C101D-12	Left Front Vertical Acceleration Sensor - Circuit short to battery	■ Left Front vertical acceleration sensor circuit short to power	■ Refer to the electrical circuit diagrams and check left front vertical acceleration sensor circuit for short to power or another circuit. Repair circuit, clear the DTC and retest the system
C101D-14	Left Front Vertical Acceleration Sensor - Circuit short to ground or open	■ Left Front vertical acceleration sensor circuit short to ground or open circuit ■ Vertical acceleration sensor fault	■ Refer to the electrical circuit diagrams and check front vertical acceleration sensor circuit for short to ground, open circuit. If no fault found on wiring suspect sensor. Replace sensor, clear DTC and retest the system
C101D-22	Left Front Vertical Acceleration Sensor - Signal	■ Left Front vertical acceleration sensor	■ With vehicle parked on a level surface, read left front vertical accelerometer voltage and check it lies in range 1.9 to 2.1 volts. If not OK then check electrical wiring for shorts, loose connections and repair as required. If wiring OK then suspect faulty sensor/incorrectly installed sensor. Check the sensor is

	amplitude > maximum	signal amplitude above maximum ■ Left front vertical acceleration sensor insecurely mounted ■ Left front vertical acceleration sensor signal circuit short to another circuit ■ Left front vertical acceleration sensor internal fault	correctly mounted, secure or renew sensor as required. Refer to the new module/component installation note at the top of the DTC Index, clear DTC and retest system	
C101D-26	Left Front Vertical Acceleration Sensor - Signal rate of change below threshold	■ Left Front vertical acceleration sensor signal rate of change below threshold	■ Refer to the electrical circuit diagrams and check left front vertical accelerometer signal circuit for faults, if circuit is correct suspect faulty sensor, refer to the new module/component installation note at the top of the DTC Index. Replace the sensor, clear the DTC and retest the system	

		■ Left front vertical acceleration sensor signal circuit short to another circuit ■ Left front vertical acceleration sensor internal fault	
C101D-78	Left Front Vertical Acceleration Sensor - Alignment or adjustment incorrect	■ Left Front vertical acceleration sensor alignment or adjustment incorrect ■ Left front vertical acceleration sensor bracket bent ■ Left front vertical acceleration sensor damaged	■ Check left front vertical accelerometer for location and security, if correct suspect faulty Accelerometer , refer to the new module installation note at the top of the DTC Index. Replace the sensor/bracket as required, clear the DTC and retest the system
C101E-	Right Front		

12	Vertical Acceleration Sensor - Circuit short to battery	■ Right Front vertical acceleration sensor circuit short to power	■ Refer to the electrical circuit diagrams and check right front vertical acceleration sensor circuit for short to power or another circuit. Repair circuit, clear the DTC and retest the system
C101E-14	Right Front Vertical Acceleration Sensor - Circuit short to ground or open	■ Right Front vertical acceleration sensor circuit short to ground or open circuit ■ Vertical acceleration sensor fault	■ Refer to the electrical circuit diagrams and check right front vertical acceleration sensor circuit for short to ground, open circuit. If no fault found on wiring suspect sensor. Replace sensor, clear DTC and retest the system
C101E-22	Right Front Vertical Acceleration Sensor - Signal amplitude > maximum	■ Right Front vertical acceleration sensor signal amplitude above maximum ■ Right front vertical acceleration sensor insecurely mounted	■ With vehicle parked on a level surface, read right front Vertical Accelerometer voltage and check it lies in range 1.9 to 2.1 volts. If not OK then check electrical wiring for shorts, loose connections and repair as required. If wiring OK then suspect faulty sensor/incorrectly installed sensor. Check the sensor is correctly mounted, secure or renew sensor as required. Clear DTC and retest system

		■ Right front vertical acceleration sensor signal circuit short to another circuit ■ Right front vertical acceleration sensor internal fault	
C101E-26	Right Front Vertical Acceleration Sensor - Signal rate of change below threshold	■ Right front vertical acceleration sensor signal circuit short to another circuit ■ Right front vertical acceleration sensor internal fault	■ Refer to the electrical circuit diagrams and check right front Vertical Accelerometer signal circuit for faults, if circuit is correct suspect faulty sensor, refer to the new module/component installation note at the top of the DTC Index. Replace the sensor, clear the DTC and retest the system
C101E-78	Right Front Vertical Acceleration Sensor -	■ Right front vertical acceleration sensor	■ Check the right front vertical accelerometer for location and security. If correct, suspect a faulty accelerometer. Replace the sensor/bracket as required, clear the DTC and retest the system

	Alignment or adjustment incorrect	alignment or adjustment incorrect ■ Right front vertical acceleration sensor bracket bent ■ Right front vertical acceleration sensor damaged	
C1024-00	System Temporarily Disabled Due To Power Interruption During Driving - No sub type information	■ Loss of power to Control module whilst driving	■ Refer to the electrical circuit diagrams and check power and ground circuits to dynamic suspension control module for intermittent or poor connection. Repair wiring circuits as required, clear DTC and retest the system
C102C-12	Right Rear Vertical Acceleration Sensor - Circuit short to battery	■ Right rear vertical acceleration sensor circuit short to power	■ Refer to the electrical circuit diagrams and check right rear vertical acceleration sensor circuit for short to power or another circuit. Repair circuit, clear the DTC and retest the system
C102C-14	Right Rear Vertical Acceleration Sensor -	■ Right Rear vertical acceleration sensor	■ Refer to the electrical circuit diagrams and check right rear vertical acceleration sensor circuit for short to ground, open circuit. If no fault found on wiring suspect sensor. Renew sensor, clear DTC and retest the system

	Circuit short to ground or open	circuit short to ground, open circuit ■ Vertical acceleration sensor fault	
C102C-22	Right Rear Vertical Acceleration Sensor - Signal amplitude > maximum	■ Right rear vertical acceleration sensor - signal amplitude > maximum ■ Right rear vertical acceleration sensor insecurely mounted ■ Right rear vertical acceleration sensor signal circuit short to another circuit ■ Right rear vertical acceleration sensor internal fault	■ With vehicle parked on a level surface, read right rear vertical accelerometer voltage and check it lies in range 1.9 to 2.1 volts. If not OK then check electrical wiring for shorts, loose connections and repair as required. If wiring OK then suspect faulty sensor/incorrectly installed sensor. Check the sensor is correctly mounted, secure or renew sensor as required. Clear DTC and retest system

C102C-26	Right Rear Vertical Acceleration Sensor - Signal rate of change below threshold	■ Right rear vertical acceleration sensor signal rate of change below threshold ■ Right rear vertical acceleration sensor signal circuit short to another circuit ■ Right Rear vertical acceleration sensor internal fault	■ Refer to the electrical circuit diagrams and check Right Rear Vertical Accelerometer signal circuit for faults, if circuit is correct suspect faulty sensor, refer to the new module/component installation note at the top of the DTC Index. Replace the sensor, clear the DTC and retest the system
C102C-78	Right Rear Vertical Acceleration Sensor - Alignment or adjustment incorrect	■ Right Rear vertical acceleration sensor alignment or adjustment incorrect ■ Right rear vertical	■ Check right rear vertical accelerometer for location and security, if correct suspect faulty accelerometer. Replace the sensor/bracket as required, clear the DTC and retest the system

		acceleration sensor bracket bent ■ Right rear vertical acceleration sensor damaged	
C110C-01	Left Front Damper Solenoid - General electrical failure	■ General electrical failure ■ Left front damper solenoid circuit fault	■ Refer to the electrical circuit diagrams and check front left damper solenoid circuit. If no faults are evident suspect a faulty control module, refer to the new module installation note at the top of the DTC Index
C110C-14	Left Front Damper Solenoid - Circuit short to ground or open	■ Front Left Damper Solenoid circuit short to ground, open circuit or high circuit Resistance ■ Front left damper solenoid failure	■ Refer to the electrical circuit diagrams and check front Left damper solenoid circuit for short to ground or open circuit. Check for corrosion, backed out terminals and poor crimping of terminals
C110C-	Left Front		

18	Damper Solenoid - Circuit current below threshold	■ Left front damper solenoid circuit current below threshold ■ Front left damper actuator open circuit at startup	■ Refer to the electrical circuit diagrams and check front left damper solenoid circuit resistance (nominal = 2 - 3.5 Ohms)
C110C-19	Left Front Damper Solenoid - Circuit current above threshold	■ Front left damper solenoid circuit current above threshold	■ Refer to the electrical circuit diagrams and check front left damper solenoid circuit resistance (nominal = 2 - 3.5 Ohms)
C110C-1D	Left Front Damper Solenoid - Circuit current out of range	■ Left front damper solenoid circuit current out of range ■ Front Left Damper Solenoid circuit short to ground /power, open circuit	■ Refer to the electrical circuit diagrams and check front Left damper solenoid circuit. Check and install a new front left damper as required

		■ Front left damper solenoid failure	
C110C-64	Left Front Damper Solenoid - Signal plausibility failure	■ Left front damper solenoid signal plausibility failure ■ Front left damper solenoid measured current control loop failed ■ Front left damper Solenoid open circuit	■ Refer to the electrical circuit diagrams and check front left damper solenoid circuit resistance (nominal = 2 - 3.5 Ohms)
C110D-01	Right Front Damper Solenoid - General electrical failure	■ General electrical failure ■ Right front damper solenoid circuit fault	■ Refer to the electrical circuit diagrams and check front right damper solenoid circuit. If no faults are evident suspect a faulty control module, refer to the new module installation note at the top of the DTC Index
C110D-	Right Front		

14	Damper Solenoid - Circuit short to ground or open	■ Front right damper solenoid circuit short to ground, open circuit or high circuit Resistance ■ Front right damper solenoid failure	■ Refer to the electrical circuit diagrams and check front right damper solenoid circuit for short to ground or open circuit. Check for corrosion, backed out terminals and poor crimping of terminals
C110D-18	Right Front Damper Solenoid - Circuit current below threshold	■ Right front damper solenoid circuit current below threshold ■ Front Right damper actuator open circuit at startup	■ Refer to the electrical circuit diagrams and check Front Right Damper Solenoid circuit resistance (nominal = 2 - 3.5 Ohms)
C110D-19	Right Front Damper Solenoid - Circuit current above threshold	■ Front right damper solenoid circuit current above threshold	■ Refer to the electrical circuit diagrams and check front right damper solenoid circuit resistance (nominal = 2 - 3.5 Ohms)

C110D-1D	Right Front Damper Solenoid - Circuit current out of range	■ Right front damper solenoid circuit current out of range ■ Front right damper Solenoid circuit short to ground /power, open circuit ■ Front right damper solenoid failure	■ Refer to the electrical circuit diagrams and check front right damper solenoid circuit for short to ground, power or open circuit. Check and install a new front right shock actuator as required
C110D-64	Right Front Damper Solenoid - Signal plausibility failure	■ Right front damper solenoid signal plausibility failure ■ Front right damper solenoid measured current control loop failed	■ Refer to the electrical circuit diagrams and check Front Right Damper Solenoid circuit resistance (nominal = 2 - 3.5 Ohms)

		■ Front right damper solenoid open circuit	
C110E-01	Left Rear Damper Solenoid - General electrical failure	■ General electrical failure ■ Left rear damper solenoid circuit fault	■ Refer to the electrical circuit diagrams and check rear left damper solenoid circuit. If no faults are evident suspect a faulty control module, refer to the new module installation note at the top of the DTC Index
C110E-14	Left Rear Damper Solenoid - Circuit short to ground or open	■ Rear left damper solenoid circuit short to ground, open circuit or high circuit resistance ■ Rear left damper solenoid failure	■ Refer to the electrical circuit diagrams and check rear left damper solenoid circuit for short to ground or open circuit. Check for corrosion, backed out terminals and poor crimping of terminals
C110E-18	Left Rear Damper Solenoid - Circuit current below threshold	■ Left rear damper solenoid circuit	■ Refer to the electrical circuit diagrams and check rear left damper solenoid circuit resistance (nominal = 2 - 3.5 Ohms)

		current below threshold ■ Rear Left damper actuator open circuit at startup	
C110E-19	Left Rear Damper Solenoid - Circuit current above threshold	■ Rear left damper solenoid circuit current above threshold	■ Refer to the electrical circuit diagrams and check rear left damper solenoid circuit resistance (nominal = 2 - 3.5 Ohms)
C110E-1D	Left Rear Damper Solenoid - Circuit current out of range	■ Left rear damper solenoid circuit current out of range ■ Rear left damper solenoid circuit short to ground /power, open circuit	■ Refer to the electrical circuit diagrams and check rear left damper solenoid circuit for short to ground, power or open circuit. Check and install a new damper as required

		■ Rear left damper solenoid failure	
C110E-64	Left Rear Damper Solenoid - Signal plausibility failure	■ Left rear damper solenoid signal plausibility failure ■ Rear left damper solenoid measured current control loop failed ■ Rear left damper solenoid open circuit	■ Refer to the electrical circuit diagrams and check rear left damper solenoid circuit resistance (nominal = 2 - 3.5 Ohms)
C110F-01	Right Rear Damper Solenoid - General electrical failure	■ General electrical failure ■ Right rear damper solenoid circuit fault	■ Refer to the electrical circuit diagrams and check rear right damper solenoid circuit. If no faults are evident suspect a faulty control module, refer to the new module installation note at the top of the DTC Index
C110F-	Right Rear		

14	Damper Solenoid - Circuit short to ground or open	■ Rear right damper solenoid circuit short to ground, open circuit or high circuit Resistance ■ Rear right damper solenoid failure	■ Refer to the electrical circuit diagrams and check rear right damper solenoid circuit. Check for corrosion, backed out terminals and poor crimping of terminals
C110F-18	Right Rear Damper Solenoid - Circuit current below threshold	■ Right rear damper solenoid circuit current below threshold ■ Rear right damper actuator open circuit at startup	■ Refer to the electrical circuit diagrams and check rear right damper solenoid circuit resistance (nominal = 2 - 3.5 Ohms)
C110F-19	Right Rear Damper Solenoid - Circuit current above threshold	■ Rear right damper solenoid circuit current above threshold	■ Refer to the electrical circuit diagrams and check rear right damper solenoid circuit resistance (nominal = 2 - 3.5 Ohms)

C110F-1D	Right Rear Damper Solenoid - Circuit current out of range	■ Right rear damper solenoid circuit current out of range ■ Rear right damper solenoid circuit short to ground /power, open circuit ■ Rear right damper solenoid failure	■ Refer to the electrical circuit diagrams and check rear right damper solenoid circuit. Check and install a new damper as required
C110F-64	Right Rear Damper Solenoid - Signal plausibility failure	■ Right rear damper solenoid signal plausibility failure ■ Rear right damper solenoid measured current control loop failed	■ Refer to the electrical circuit diagrams and check rear right damper solenoid circuit resistance (nominal = 2 - 3.5 Ohms)

		■ Rear right damper solenoid open circuit	
C1A03-12	Left Front Height Sensor - Circuit short to battery	■ Left front height sensor circuit short to power ■ Height sensor circuit shorted to another cable ■ Height sensor internal fault	■ Refer to the electrical circuit diagrams and check front left height sensor circuit. If circuit correct suspect sensor internal fault, renew as required
C1A03-14	Left Front Height Sensor - Circuit short to ground or open	■ Wiring to sensor (signal) open circuit ■ Wiring to height sensor partial short to ground ■ Wiring to height	■ Disconnect electrical connector to height sensor and inspect connector pins & terminals for evidence of corrosion or water ingress. If no corrosion found, disconnect harness at control module. (A) Check for short circuits between any of the three terminals and vehicle ground. (B) Check for electrical continuity between the two connectors for each of the three terminals. Reconnect electrical connector at control module only. C) Check voltages at terminals within height sensor connector (sensor not connected): voltage to sensor ground connection should be ~0V, voltage to sensor signal connection should be ~0V, voltage to sensor supply connection should be ~5V. All voltages should be within ± 0.15V

		sensor short to other cable ■ Height sensor internal electrical fault	
C1A03-16	Left Front Height Sensor - Circuit voltage below threshold	■ Left front height sensor circuit voltage below threshold ■ Incorrect height calibration	■ Refer to the workshop manual and perform the height sensor calibration procedure. Clear the DTC and retest the system
C1A03-17	Left Front Height Sensor - Circuit voltage above threshold	■ Left front height sensor circuit voltage above threshold ■ Incorrect height calibration	■ Refer to the workshop manual and perform the height sensor calibration procedure. Clear the DTC and retest the system
C1A03-	Left Front		NOTE:

	21	Height Sensor - Signal amplitude < minimum	■ Left front height sensor signal amplitude below minimum ■ Height sensor linkage not connected ■ Height sensor or bracket loose ■ Height sensor bracket bent ■ Incorrect height calibration ■ Height sensor linkage toggled ■ Height sensor water ingress ■ Wiring to height sensor partial short to ground	If any height sensor fixings were slackened or found to be loose or if a height sensor was changed, the vehicle ride height MUST be re-calibrated ■ Inspect for damage or loose fixings. Confirm that the correct height sensor part number is installed, as specified in the service parts database. To check height sensor: Disconnect electrical connector to height sensor and inspect connecter pins & terminals for evidence of corrosion or water ingress. If no corrosion is found, disconnect harness at control module then: (A) Check for short circuits between any of the three terminals and vehicle ground. (B) Check for electrical continuity between the two connectors for each of the three terminals. Reconnect electrical connector at control module only. C) Check voltages at terminals within height sensor connector (sensor not connected). • Voltage to sensor ground connection should be ~0V, voltage to sensor signal connection should be ~0V, voltage to sensor supply connection should be ~5V All voltages should be within ± 0.15V. To check sensor operation on the vehicle: Check for water ingress around the height sensors, electrical connectors or shaft end. Check for excessive movement in the shaft in all directions. Raise vehicle (ideally on wheels-free ramp) until suspension on corner under investigation is at full extension to gain access to height sensor. Access may be improved by removing road-wheel. Carefully disconnect the height sensor link from the upper suspension arm. Monitor the height sensor signal voltage output for the height sensor under investigation. Position the sensor arm so it is in the mid position and confirm that the voltage is around 2.5 volts. Move the sensor arm over the range ±40° around the mid position and confirm that the voltage changes smoothly between around 0.2 volts and 4.8 volts. If voltages are incorrect or do not change smoothly then renew the sensor. NOTE: For angles of movement beyond ±40°, the sensor signal will remain at a voltage of ~0. 15V or ~4.85V, depending on position of sensor lever. This is normal. When investigation is complete, install the height sensor link to the upper arm. If any fixings to the height sensor body or mounting bracket were slackened, found to be loose or if a height sensor was changed, the vehicle ride height MUST be re-calibrated. Refer to the relevant section of the workshop manual for the calibration procedure	

			■ Wiring to height sensor short to other cable ■ Height sensor electrical fault ■ Height sensor linkage bent ■ Incorrect height sensor installed	
C1A03-22	Left Front Height Sensor - Signal amplitude > maximum		■ Left front height Sensor signal amplitude above maximum ■ Height sensor linkage not connected ■ Height sensor or bracket loose	**NOTE:** If any height sensor fixings were slackened or found to be loose or if a height sensor was changed, the vehicle ride height MUST be re-calibrated ■ Inspect for damage or loose fixings. Confirm that the correct height sensor part number is installed, as specified in the service parts database. To check height sensor: Disconnect electrical connector to height sensor and inspect connecter pins & terminals for evidence of corrosion or water ingress. If no corrosion is found, disconnect harness at control module then: (A) Check for short circuits between any of the three terminals and vehicle ground. (B) Check for electrical continuity between the two connectors for each of the three terminals. Reconnect electrical connector at control module only. C) Check voltages at terminals within height sensor connector (sensor not connected). • Voltage to sensor ground connection should be ~0V, voltage to sensor signal connection

			■ Height sensor bracket bent ■ Incorrect height calibration ■ Height sensor linkage toggled ■ Height sensor water ingress ■ Wiring to height sensor partial short to ground ■ Wiring to height sensor short to other cable ■ Height sensor electrical fault ■ Height sensor linkage bent ■ Incorrect height	should be ~0V, voltage to sensor supply connection should be ~5V All voltages should be within ± 0.15V. To check sensor operation on the vehicle: Check for water ingress around the height sensors, electrical connectors or shaft end. Check for excessive movement in the shaft in all directions. Raise vehicle (ideally on wheels-free ramp) until suspension on corner under investigation is at full extension to gain access to height sensor. Access may be improved by removing road-wheel. Carefully disconnect the height sensor link from the upper suspension arm. Monitor the height sensor signal voltage output for the height sensor under investigation. Position the sensor arm so it is in the mid position and confirm that the voltage is around 2.5 volts. Move the sensor arm over the range ±40° around the mid position and confirm that the voltage changes smoothly between around 0.2 volts and 4.8 volts. If voltages are incorrect or do not change smoothly then renew the sensor. NOTE: For angles of movement beyond ±40°, the sensor signal will remain at a voltage of ~0. 15V or ~4.85V, depending on position of sensor lever. This is normal. When investigation is complete, install the height sensor link to the upper arm. If any fixings to the height sensor body or mounting bracket were slackened, found to be loose or if a height sensor was changed, the vehicle ride height MUST be re-calibrated. Refer to the relevant section of the workshop manual for the calibration procedure	

		sensor installed	
C1A03-76	Left Front Height Sensor - Wrong mounting position	■ Incorrect left front height sensor mounting position ■ Incorrect height calibration	■ Check for correct height sensor installation and orientation. Rectify as necessary ■ Refer to the workshop manual and perform the height sensor calibration procedure. Clear the DTC and retest the system
C1A03-78	Left Front Height Sensor - Alignment or adjustment incorrect	■ Left front height sensor alignment or adjustment incorrect	■ Refer to the workshop manual and perform the height sensor calibration procedure. Clear the DTC and retest the system
C1A04-12	Right Front Height Sensor - Circuit short to battery	■ Right front height sensor circuit short to power ■ Height sensor circuit shorted to another cable ■ Height sensor internal fault	■ Refer to the electrical circuit diagrams and check front right height sensor circuit. If circuit correct suspect a sensor internal fault, renew as required

C1A04-14	Right Front Height Sensor - Circuit short to ground or open	■ Wiring to sensor (signal) open circuit ■ Wiring to height sensor partial short to ground ■ Wiring to height sensor short to other cable ■ Height sensor internal electrical fault	■ Disconnect electrical connector to height sensor and inspect connector pins & terminals for evidence of corrosion or water ingress. If no corrosion found, disconnect harness at control module. (A) Check for short circuits between any of the three terminals and vehicle ground. (B) Check for electrical continuity between the two connectors for each of the three terminals. Reconnect electrical connector at control module only. C) Check voltages at terminals within height sensor connector (sensor not connected). Voltage to sensor ground connection should be ~0V, voltage to sensor signal connection should be ~0V, voltage to sensor supply connection should be ~5V All voltages should be within ± 0.15V
C1A04-16	Right Front Height Sensor - Circuit voltage below threshold	■ Right front height sensor circuit voltage below threshold ■ Incorrect height calibration	■ Refer to the workshop manual and perform the height sensor calibration procedure. Clear the DTC and retest the system

C1A04-17	Right Front Height Sensor - Circuit voltage above threshold	■ Right front height sensor circuit voltage above threshold ■ Incorrect height calibration	■ Refer to the workshop manual and perform the height sensor calibration procedure. Clear the DTC and retest the system
C1A04-21	Right Front Height Sensor - Signal amplitude < minimum	■ Right front height sensor signal amplitude below minimum ■ Height sensor linkage not connected ■ Height sensor or bracket loose ■ Height sensor bracket bent ■ Incorrect height calibration	**NOTE:** If any height sensor fixings were slackened or found to be loose or if a height sensor was changed, the vehicle ride height MUST be re-calibrated ■ Inspect for damage or loose fixings. Confirm that the correct height sensor part number is installed, as specified in the service parts database. To check height sensor: Disconnect electrical connector to height sensor and inspect connecter pins & terminals for evidence of corrosion or water ingress. If no corrosion is found, disconnect harness at control module then: (A) Check for short circuits between any of the three terminals and vehicle ground. (B) Check for electrical continuity between the two connectors for each of the three terminals. Reconnect electrical connector at control module only. C) Check voltages at terminals within height sensor connector (sensor not connected). • Voltage to sensor ground connection should be ~0V, voltage to sensor signal connection should be ~0V, voltage to sensor supply connection should be ~5V All voltages should be within ± 0.15V. To check sensor operation on the vehicle: Check for water ingress around the height sensors, electrical connectors or shaft end. Check for excessive movement in the shaft in all directions. Raise vehicle (ideally on wheels-free ramp) until suspension on corner under investigation is at full extension to gain access to height sensor. Access may be improved by removing road-wheel. Carefully disconnect the height sensor link from the

		■ Height sensor linkage toggled ■ Height sensor water ingress ■ Wiring to height sensor partial short to ground ■ Wiring to height sensor short to other cable ■ Height sensor electrical fault ■ Height sensor linkage bent ■ Incorrect height sensor installed	upper suspension arm. Monitor the height sensor signal voltage output for the height sensor under investigation. Position the sensor arm so it is in the mid position and confirm that the voltage is around 2.5 volts. Move the sensor arm over the range ±40° around the mid position and confirm that the voltage changes smoothly between around 0.2 volts and 4.8 volts. If voltages are incorrect or do not change smoothly then renew the sensor. NOTE: For angles of movement beyond ±40°, the sensor signal will remain at a voltage of ~0. 15V or ~4.85V, depending on position of sensor lever. This is normal. When investigation is complete, install the height sensor link to the upper arm. If any fixings to the height sensor body or mounting bracket were slackened, found to be loose or if a height sensor was changed, the vehicle ride height MUST be re-calibrated. Refer to the relevant section of the workshop manual for the calibration procedure
C1A04-22	Right Front Height Sensor - Signal	■ Right front height sensor	**NOTE:**

		amplitude > maximum	signal amplitude above maximum ■ Height sensor linkage not connected ■ Height sensor or bracket loose ■ Height sensor bracket bent ■ Incorrect height calibration ■ Height sensor linkage toggled ■ Height sensor water ingress ■ Wiring to height sensor partial short to ground ■ Wiring to height sensor short	If any height sensor fixings were slackened or found to be loose or if a height sensor was changed, the vehicle ride height MUST be re-calibrated ■ Inspect for damage or loose fixings. Confirm that the correct height sensor part number is installed, as specified in the service parts database. To check height sensor: Disconnect electrical connector to height sensor and inspect connecter pins & terminals for evidence of corrosion or water ingress. If no corrosion is found, disconnect harness at control module then: (A) Check for short circuits between any of the three terminals and vehicle ground. (B) Check for electrical continuity between the two connectors for each of the three terminals. Reconnect electrical connector at control module only. C) Check voltages at terminals within height sensor connector (sensor not connected). • Voltage to sensor ground connection should be ~0V, voltage to sensor signal connection should be ~0V, voltage to sensor supply connection should be ~5V All voltages should be within ± 0.15V. To check sensor operation on the vehicle: Check for water ingress around the height sensors, electrical connectors or shaft end. Check for excessive movement in the shaft in all directions. Raise vehicle (ideally on wheels-free ramp) until suspension on corner under investigation is at full extension to gain access to height sensor. Access may be improved by removing road-wheel. Carefully disconnect the height sensor link from the upper suspension arm. Monitor the height sensor signal voltage output for the height sensor under investigation. Position the sensor arm so it is in the mid position and confirm that the voltage is around 2.5 volts. Move the sensor arm over the range ±40° around the mid position and confirm that the voltage changes smoothly between around 0.2 volts and 4.8 volts. If voltages are incorrect or do not change smoothly then renew the sensor. NOTE: For angles of movement beyond ±40°, the sensor signal will remain at a voltage of ~0. 15V or ~4.85V, depending on position of sensor lever. This is normal. When investigation is complete, install the height sensor link to the upper arm. If any fixings to the height sensor body or mounting bracket were slackened, found to be loose or if a height sensor was changed, the vehicle ride height MUST be re-calibrated. Refer to the relevant section of the workshop manual for the calibration procedure	

		to other cable ■ Height sensor electrical fault ■ Height sensor linkage bent ■ Incorrect height sensor installed	
C1A04-76	Right Front Height Sensor - Wrong mounting position	■ Incorrect right front height sensor mounting position ■ Incorrect height calibration	■ Check for correct height sensor installation and orientation. Rectify as necessary ■ Refer to the workshop manual and perform the height sensor calibration procedure. Clear the DTC and retest the system
C1A04-78	Right Front Height Sensor - Alignment or adjustment incorrect	■ Right Front height sensor alignment or adjustment incorrect	■ Refer to the workshop manual and perform the height sensor calibration procedure. Clear the DTC and retest the system
C1A05-	Left Rear		

	12	Height Sensor - Circuit short to battery	■ Left rear height sensor circuit short to power ■ Height sensor circuit shorted to another cable ■ Height sensor internal fault	■ Refer to the electrical circuit diagrams and check rear left height sensor circuit. If circuit correct suspect a sensor internal fault, renew as required
	C1A05-14	Left Rear Height Sensor - Circuit short to ground or open	■ Wiring to sensor (signal) open circuit ■ Wiring to height sensor partial short to ground ■ Wiring to height sensor short to other cable ■ Height sensor internal electrical fault	■ Disconnect electrical connector to height sensor and inspect connector pins and terminals for evidence of corrosion or water ingress. If no corrosion is found, disconnect harness at the control module. (A) Check for short circuits between any of the three terminals and vehicle ground. (B) Check for electrical continuity between the two connectors for each of the three terminals. Reconnect electrical connector at control module only. C) Check voltages at terminals within height sensor connector (sensor not connected). Voltage to sensor ground connection should be ~0V, voltage to sensor signal connection should be ~0V, voltage to sensor supply connection should be ~5V All voltages should be within ± 0.15V

C1A05-16	Left Rear Height Sensor - Circuit voltage below threshold	■ Left rear height sensor circuit voltage below threshold ■ Incorrect height calibration	■ Refer to the workshop manual and perform the height sensor calibration procedure. Clear the DTC and retest the system
C1A05-17	Left Rear Height Sensor - Circuit voltage above threshold	■ Left rear height sensor circuit voltage above threshold ■ Incorrect height calibration	■ Refer to the workshop manual and perform the height sensor calibration procedure. Clear the DTC and retest the system
C1A05-21	Left Rear Height Sensor - Signal amplitude < minimum	■ Left rear height sensor signal amplitude below minimum ■ Height sensor	**NOTE:** If any height sensor fixings were slackened or found to be loose or if a height sensor was changed, the vehicle ride height MUST be re-calibrated ■ Inspect for damage or loose fixings. Confirm that the correct height sensor part number is installed, as specified in the service parts database. To check height sensor: Disconnect electrical connector to height sensor and inspect connecter

			linkage not connected ■ Height sensor or bracket loose ■ Height sensor bracket bent ■ Incorrect height calibration ■ Height sensor linkage toggled ■ Height sensor water ingress ■ Wiring to height sensor partial short to ground ■ Wiring to height sensor short to other cable ■ Height sensor electrical fault	pins & terminals for evidence of corrosion or water ingress. If no corrosion is found, disconnect harness at control module then: (A) Check for short circuits between any of the three terminals and vehicle ground. (B) Check for electrical continuity between the two connectors for each of the three terminals. Reconnect electrical connector at control module only. C) Check voltages at terminals within height sensor connector (sensor not connected). • Voltage to sensor ground connection should be ~0V, voltage to sensor signal connection should be ~0V, voltage to sensor supply connection should be ~5V All voltages should be within ± 0.15V. To check sensor operation on the vehicle: Check for water ingress around the height sensors, electrical connectors or shaft end. Check for excessive movement in the shaft in all directions. Raise vehicle (ideally on wheels-free ramp) until suspension on corner under investigation is at full extension to gain access to height sensor. Access may be improved by removing road-wheel. Carefully disconnect the height sensor link from the upper suspension arm. Monitor the height sensor signal voltage output for the height sensor under investigation. Position the sensor arm so it is in the mid position and confirm that the voltage is around 2.5 volts. Move the sensor arm over the range ±40° around the mid position and confirm that the voltage changes smoothly between around 0.2 volts and 4.8 volts. If voltages are incorrect or do not change smoothly then renew the sensor. NOTE: For angles of movement beyond ±40°, the sensor signal will remain at a voltage of ~0. 15V or ~4.85V, depending on position of sensor lever. This is normal. When investigation is complete, install the height sensor link to the upper arm. If any fixings to the height sensor body or mounting bracket were slackened, found to be loose or if a height sensor was changed, the vehicle ride height MUST be re-calibrated. Refer to the relevant section of the workshop manual for the calibration procedure	

		■ Height sensor linkage bent ■ Incorrect height sensor installed	
C1A05-22	Left Rear Height Sensor - Signal amplitude > maximum	■ Left rear height sensor signal amplitude above maximum ■ Height sensor linkage not connected ■ Height sensor or bracket loose ■ Height sensor bracket bent ■ Incorrect height calibration ■ Height sensor linkage toggled	**NOTE:** If any height sensor fixings were slackened or found to be loose or if a height sensor was changed, the vehicle ride height MUST be re-calibrated ■ Inspect for damage or loose fixings. Confirm that the correct height sensor part number is installed, as specified in the service parts database. To check height sensor: Disconnect electrical connector to height sensor and inspect connecter pins & terminals for evidence of corrosion or water ingress. If no corrosion is found, disconnect harness at control module then: (A) Check for short circuits between any of the three terminals and vehicle ground. (B) Check for electrical continuity between the two connectors for each of the three terminals. Reconnect electrical connector at control module only. C) Check voltages at terminals within height sensor connector (sensor not connected). • Voltage to sensor ground connection should be ~0V, voltage to sensor signal connection should be ~0V, voltage to sensor supply connection should be ~5V All voltages should be within ± 0.15V. To check sensor operation on the vehicle: Check for water ingress around the height sensors, electrical connectors or shaft end. Check for excessive movement in the shaft in all directions. Raise vehicle (ideally on wheels-free ramp) until suspension on corner under investigation is at full extension to gain access to height sensor. Access may be improved by removing road-wheel. Carefully disconnect the height sensor link from the upper suspension arm. Monitor the height sensor signal voltage output for the height sensor under investigation. Position the sensor arm so it is in the mid position and confirm that the voltage is around 2.5 volts. Move the sensor arm

		■ Height sensor water ingress ■ Wiring to height sensor partial short to ground ■ Wiring to height sensor short to other cable ■ Height sensor electrical fault ■ Height sensor linkage bent ■ Incorrect height sensor installed	over the range ±40° around the mid position and confirm that the voltage changes smoothly between around 0.2 volts and 4.8 volts. If voltages are incorrect or do not change smoothly then renew the sensor. NOTE: For angles of movement beyond ±40°, the sensor signal will remain at a voltage of ~0. 15V or ~4.85V, depending on position of sensor lever. This is normal. When investigation is complete, install the height sensor link to the upper arm. If any fixings to the height sensor body or mounting bracket were slackened, found to be loose or if a height sensor was changed, the vehicle ride height MUST be re-calibrated. Refer to the relevant section of the workshop manual for the calibration procedure
C1A05-76	Left Rear Height Sensor - Wrong mounting position	■ Incorrect left rear height sensor mounting position	■ Check for correct height sensor installation and orientation. Rectify as necessary ■ Refer to the workshop manual and perform the height sensor calibration procedure. Clear the DTC and retest the system

		■ Incorrect height calibration	
C1A05-78	Left Rear Height Sensor - Alignment or adjustment incorrect	■ Left rear height sensor alignment or adjustment incorrect	■ Refer to the workshop manual and perform the height sensor calibration procedure. Clear the DTC and retest the system
C1A06-12	Right Rear Height Sensor - Circuit short to battery	■ Right rear height sensor circuit short to power ■ Height sensor circuit shorted to another cable ■ Height sensor internal fault	■ Refer to the electrical circuit diagrams and check the rear right height sensor circuit. If circuit correct suspect a sensor internal fault, renew as required
C1A06-14	Right Rear Height Sensor - Circuit short to ground or open	■ Wiring to sensor (signal) open circuit ■ Wiring to height sensor	■ Disconnect electrical connector to height sensor and inspect connector pins & terminals for evidence of corrosion or water ingress. If no corrosion found, disconnect harness at control module. (A) Check for short circuits between any of the three terminals and vehicle ground. (B) Check for electrical continuity between the two connectors for each of the three terminals. Reconnect electrical connector at control module only. C) Check voltages at terminals within height sensor connector (sensor not connected). Voltage to sensor

		partial short to ground ■ Wiring to height sensor short to other cable ■ Height sensor internal electrical fault	ground connection should be ~0V, voltage to sensor signal connection should be ~0V, voltage to sensor supply connection should be ~5V All voltages should be within ± 0.15V
C1A06-16	Right Rear Height Sensor - Circuit voltage below threshold	■ Right rear height sensor circuit voltage below threshold ■ Incorrect height calibration	■ Refer to the workshop manual and perform the height sensor calibration procedure. Clear the DTC and retest the system
C1A06-17	Right Rear Height Sensor - Circuit voltage above threshold	■ Right rear height sensor circuit voltage above threshold	■ Refer to the workshop manual and perform the height sensor calibration procedure. Clear the DTC and retest the system

		■ Incorrect height calibration	
C1A06-21	Right Rear Height Sensor - Signal amplitude < minimum	■ Right rear height sensor signal amplitude below minimum ■ Height sensor linkage not connected ■ Height sensor or bracket loose ■ Height sensor bracket bent ■ Incorrect height calibration ■ Height sensor linkage toggled ■ Height sensor water ingress	**NOTE:** If any height sensor fixings were slackened or found to be loose or if a height sensor was changed, the vehicle ride height MUST be re-calibrated ■ Inspect for damage or loose fixings. Confirm that the correct height sensor part number is installed, as specified in the service parts database. To check height sensor: Disconnect electrical connector to height sensor and inspect connecter pins & terminals for evidence of corrosion or water ingress. If no corrosion is found, disconnect harness at control module then: (A) Check for short circuits between any of the three terminals and vehicle ground. (B) Check for electrical continuity between the two connectors for each of the three terminals. Reconnect electrical connector at control module only. C) Check voltages at terminals within height sensor connector (sensor not connected). • Voltage to sensor ground connection should be ~0V, voltage to sensor signal connection should be ~0V, voltage to sensor supply connection should be ~5V All voltages should be within ± 0.15V. To check sensor operation on the vehicle: Check for water ingress around the height sensors, electrical connectors or shaft end. Check for excessive movement in the shaft in all directions. Raise vehicle (ideally on wheels-free ramp) until suspension on corner under investigation is at full extension to gain access to height sensor. Access may be improved by removing road-wheel. Carefully disconnect the height sensor link from the upper suspension arm. Monitor the height sensor signal voltage output for the height sensor under investigation. Position the sensor arm so it is in the mid position and confirm that the voltage is around 2.5 volts. Move the sensor arm over the range ±40° around the mid position and confirm that the voltage changes smoothly between around 0.2 volts and 4.8 volts. If voltages are incorrect or do not change smoothly then renew the sensor. NOTE: For angles of movement beyond ±40°, the sensor signal will remain at a voltage of ~0.

			■ Wiring to height sensor partial short to ground ■ Wiring to height sensor short to other cable ■ Height sensor electrical fault ■ Height sensor linkage bent ■ Incorrect height sensor installed	15V or ~4.85V, depending on position of sensor lever. This is normal. When investigation is complete, install the height sensor link to the upper arm. If any fixings to the height sensor body or mounting bracket were slackened, found to be loose or if a height sensor was changed, the vehicle ride height MUST be re-calibrated. Refer to the relevant section of the workshop manual for the calibration procedure
C1A06-22	Right Rear Height Sensor - Signal amplitude > maximum	■ Right Rear Height Sensor - signal amplitude above maximum ■ Height sensor linkage not connected		**NOTE:** If any height sensor fixings were slackened or found to be loose or if a height sensor was changed, the vehicle ride height MUST be re-calibrated ■ Inspect for damage or loose fixings. Confirm that the correct height sensor part number is installed, as specified in the service parts database. To check height sensor: Disconnect electrical connector to height sensor and inspect connecter pins & terminals for evidence of corrosion or water ingress. If no corrosion is

			■ Height sensor or bracket loose ■ Height sensor bracket bent ■ Incorrect height calibration ■ Height sensor linkage toggled ■ Height sensor water ingress ■ Wiring to height sensor partial short to ground ■ Wiring to height sensor short to other cable ■ Height sensor electrical fault	found, disconnect harness at control module then: (A) Check for short circuits between any of the three terminals and vehicle ground. (B) Check for electrical continuity between the two connectors for each of the three terminals. Reconnect electrical connector at control module only. C) Check voltages at terminals within height sensor connector (sensor not connected). • Voltage to sensor ground connection should be ~0V, voltage to sensor signal connection should be ~0V, voltage to sensor supply connection should be ~5V All voltages should be within ± 0.15V. To check sensor operation on the vehicle: Check for water ingress around the height sensors, electrical connectors or shaft end. Check for excessive movement in the shaft in all directions. Raise vehicle (ideally on wheels-free ramp) until suspension on corner under investigation is at full extension to gain access to height sensor. Access may be improved by removing road-wheel. Carefully disconnect the height sensor link from the upper suspension arm. Monitor the height sensor signal voltage output for the height sensor under investigation. Position the sensor arm so it is in the mid position and confirm that the voltage is around 2.5 volts. Move the sensor arm over the range ±40° around the mid position and confirm that the voltage changes smoothly between around 0.2 volts and 4.8 volts. If voltages are incorrect or do not change smoothly then renew the sensor. NOTE: For angles of movement beyond ±40°, the sensor signal will remain at a voltage of ~0. 15V or ~4.85V, depending on position of sensor lever. This is normal. When investigation is complete, install the height sensor link to the upper arm. If any fixings to the height sensor body or mounting bracket were slackened, found to be loose or if a height sensor was changed, the vehicle ride height MUST be re-calibrated. Refer to the relevant section of the workshop manual for the calibration procedure	

		■ Height sensor linkage bent ■ Incorrect height sensor installed	
C1A06-76	Right Rear Height Sensor - Wrong mounting position	■ Incorrect right rear height sensor mounting position ■ Incorrect height calibration	■ Check for correct height sensor installation and orientation. Rectify as necessary ■ Refer to the workshop manual and perform the height sensor calibration procedure. Clear the DTC and retest the system
C1A06-78	Right Rear Height Sensor - Alignment or adjustment incorrect	■ Right rear height sensor alignment or adjustment incorrect	■ Refer to the workshop manual and perform the height sensor calibration procedure. Clear the DTC and retest the system
C1B14-1C	Sensor Supply Voltage A - Circuit voltage out of range	■ Sensor supply voltage A out of range ■ Any height sensor supply	■ Refer to the electrical circuit diagrams and check the sensor supply circuit. Check all height sensors. Check the control module sensor supply output voltage. Measured voltage should be between 4.995 volts and 4.85 volts. Refer to the warranty policy and procedures manual if a module is suspect

			partial short to other circuit or ground ■ Any height sensor internal failure ■ Internal control module failure	
C1B15-1C	Sensor Supply Voltage B - Circuit voltage out of range	■ Sensor supply voltage B out of range ■ Any vertical acceleration sensor supply partial short to other circuit or ground. ■ Any vertical acceleration sensor internal failure	■ Refer to the electrical circuit diagrams and check sensor supply for circuit fault. Check all vertical acceleration sensors. Check control module sensor supply output voltage. Measured voltage should be between 4.995 volts and 4.85 volts	

		■ Internal control module failure	
U0001-88	High speed CAN Communication Bus - Bus off	■ Bus off	■ Refer to the electrical circuit diagrams and check the power and ground connections to the module. Using the manufacturer approved diagnostic system, complete a CAN network integrity test. Refer to the electrical circuit diagrams and check the CAN network
U0100-00	Lost Communication With ECM/PCM A - No sub type information	■ No sub type information	■ Refer to the electrical circuit diagrams and check the power and ground connections to the module. Using the manufacturer approved diagnostic system, complete a CAN network integrity test. Refer to the electrical circuit diagrams and check the CAN network between the engine control module and vehicle dynamics control module
U0101-00	Lost Communication with TCM - No sub type information	■ No sub type information	■ Refer to the electrical circuit diagrams and check the power and ground connections to the module. Using the manufacturer approved diagnostic system, complete a CAN network integrity test. Refer to the electrical circuit diagrams and check the CAN network between the transmission control module and vehicle dynamics control module
U0102-00	Lost Communication With Transfer Case Control Module - No sub type information	■ No sub type information	■ Refer to the electrical circuit diagrams and check the power and ground connections to the transfer case control module. Using the manufacturer approved diagnostic system, complete a CAN network integrity test. Refer to the electrical circuit diagrams and check the CAN network between the transfer case control module and the adaptive damping system control module
U0103-00	Lost Communication	■ No sub type information	■ Refer to the electrical circuit diagrams and check the power and ground connections to the module. Using the manufacturer approved diagnostic

	With Gear Shift Control Module A - No sub type information		system, complete a CAN network integrity test. Refer to the electrical circuit diagrams and check the CAN network between the gear shift control module and vehicle dynamics control module
U0121-00	Lost Communication With Anti-Lock Brake System (ABS) Control Module - no sub type information - No sub type information	■ No sub type information	■ Refer to the electrical circuit diagrams and check the power and ground connections to the module. Using the manufacturer approved diagnostic system, complete a CAN network integrity test. Refer to the electrical circuit diagrams and check the CAN network between the ABS module and vehicle dynamics control module
U0126-00	Lost Communication With Steering Angle Sensor Module - No sub type information	■ No sub type information	■ Refer to the electrical circuit diagrams and check the power and ground connections to the module. Using the manufacturer approved diagnostic system, complete a CAN network integrity test. Refer to the electrical circuit diagrams and check the CAN network between the steering angle sensor module and vehicle dynamics control module
U0132-00	Lost Communication With Suspension Control Module A - No sub type information	■ No sub type information	■ Refer to the electrical circuit diagrams and check the power and ground connections to the module. Using the manufacturer approved diagnostic system, complete a CAN network integrity test. Refer to the electrical circuit diagrams and check the CAN network between the suspension control module and vehicle dynamics control module
U0140-00	Lost Communication With Body	■ No sub type information	■ Refer to the electrical circuit diagrams and check the power and ground connections to the module. Using the manufacturer approved diagnostic system, complete a CAN network integrity test. Refer to the electrical circuit

	Control Module - No sub type information		diagrams and check the CAN network between the generic electronic module and vehicle dynamics control module
U0142-00	Lost Communication With Body Control Module B - No sub type information	■ No sub type information	■ Refer to the electrical circuit diagrams and check the power and ground connections to the module. Using the manufacturer approved diagnostic system, complete a CAN network integrity test. Refer to the electrical circuit diagrams and check the CAN network between the generic electronic module and vehicle dynamics control module
U0155-00	Lost Communication With Instrument Panel Cluster (IPC) Control Module - No sub type information	■ No sub type information	■ Refer to the electrical circuit diagrams and check the power and ground connections to the module. Using the manufacturer approved diagnostic system, complete a CAN network integrity test. Refer to the electrical circuit diagrams and check the CAN network between the instrument panel cluster and vehicle dynamics control module
U0300-00	Internal Control Module Software Incompatibility - No sub type information	■ No sub type information	■ Check the Central Junction Box vehicle configuration file. Ensure the part number of adaptive damping control module is correct
U0401-68	Invalid Data Received from ECM/PCM A - Event information	■ Event information	■ Check the Engine Control Module for related DTCs and refer to the relevant DTC index
U0402-68	Invalid Data Received from	■ Event information	■ Check the Transmission Control Module for related DTCs and refer to the relevant DTC index

	TCM - Event information		
U0403-68	Invalid Data Received From Transfer Case Control Module - Event information	■ Event information	■ Check the Transfer Case Control Module for related DTCs and refer to the relevant DTC index
U0404-68	Invalid Data Received from Gear Shift Control Module A - Event information	■ Event information	■ Check the Transmission Shift Control Module for related DTCs and refer to the relevant DTC index
U0415-68	Invalid Data Received From Anti-Lock Brake System (ABS) Control Module - Event information	■ Event information	■ Check the ABS module for related DTCs and refer to the relevant DTC index
U0421-68	Invalid Data Received from Suspension Control Module A - Event information	■ Event information	■ Check the Suspension Module for related DTCs and refer to the relevant DTC index
U0422-68	Invalid Data Received From Body Control Module - Event information	■ Event information	■ Check the Central Junction Box for related DTCs and refer to the relevant DTC index

U0428-68	Invalid Data Received From Steering Angle Sensor Module (SASM) - Event information	■ Event information	■ Check the Steering Angle Sensor Module for related DTCs and refer to the relevant DTC index
U0443-68	Invalid Data Received From Body Control Module B - Event information	■ Event information	■ Check the Central Junction Box for related DTCs and refer to the relevant DTC index
U1A14-00	CAN Initialization Failure - No sub type information	■ CAN network harness short circuit or disconnected	■ Refer to the electrical circuit diagrams and check the power and ground connections to the module. Using the manufacturer approved diagnostic system, complete a CAN network integrity test. Refer to the electrical circuit diagrams and check the CAN network between the Central Junction Box and the ride leveling module
U2100-00	Initial Configuration Not Complete - No sub type information	■ Car configuration data not loaded (new generic electronic module installed to vehicle and not initialized)	■ Configure the module using the manufacturers approved diagnostic system. Clear DTC and retest
U2101-00	Control Module Configuration	■ Car configuration	■ Carry out the new module software installation procedure using the manufacturers approved diagnostic system. Clear DTC and retest

	Incompatible - No sub type information	data transmitted over CAN does not match adaptive damping control module internal configuration	
U3000-01	Control module - General electrical failure	■ General electrical failure	■ Check integrity of electrical connectors and pins to the module. Refer to the electrical circuit diagrams and check the power and ground circuits to the module. Check the damper negative circuits for short to ground. Clear the DTC and retest. If the problem persists, renew the module. Refer to the warranty policy and procedures manual if a module is suspect
U3000-04	Control Module - System internal failures	■ Module internal failure	■ Refer to the electrical circuit diagrams and check the power and ground circuits to the module. Clear the DTC and retest. If the problem persists, renew the module. Refer to the warranty policy and procedures manual if a module is suspect
U3000-43	Control Module - Special memory failure	■ Module internal failure	■ Refer to the electrical circuit diagrams and check the power and ground circuits to the module. Clear the DTC and retest. If the problem persists, renew the module. Refer to the warranty policy and procedures manual if a module is suspect
U3000-45	Control Module - Program memory failure	■ Module internal failure	■ Refer to the electrical circuit diagrams and check the power and ground circuits to the module. Clear the DTC and retest. If the problem persists, renew the module. Refer to the warranty policy and procedures manual if a module is suspect

U3000-47	Control Module - Watchdog /safety microcontroller failure	■ Module internal watchdog /safety micro controller failure	■ If this DTC is logged contact your local in market support
U3000-52	Control Module - Not activated	■ Adaptive suspension control module has been replaced and not programmed	■ Install the latest software via the new module installation procedure using the manufacturers approved diagnostic system
U3000-54	Control Module - Missing calibration	■ Adaptive damping control module has been replaced and no software is installed	■ Install the latest software via the new module installation procedure using the manufacturers approved diagnostic system
U3003-1C	Battery Voltage - Circuit voltage out of range	■ Circuit voltage out of range (supply voltage at adaptive damping	■ Check the battery is in good condition and fully charged, refer to the battery care manual. Refer to the starting and charging section of the workshop manual and check the performance of the charging system. Refer to the electrical circuit diagrams and check power and ground circuit to adaptive damping control module

		control module below 10.5V or above 18V for 30 seconds)	
U3003-62	Battery Voltage - Signal compare failure	■ Signal compare failure ■ High resistance connections ■ Adaptive damping control module Internal failure	■ Check the battery is in good condition and fully charged, refer to the battery care manual. Refer to the starting and charging section of the workshop manual and check the performance of the charging system. Refer to the electrical circuit diagrams and check power and ground circuit to adaptive damping control module

2012.0 RANGE ROVER (LM), 100-00

GENERAL INFORMATION

DESCRIPTION AND OPERATION

NAVIGATION CONTROL MODULE (NCM)

CAUTION:

Diagnosis by substitution from a donor vehicle is **NOT** acceptable. Substitution of control modules does not guarantee confirmation of a fault, and may also cause additional faults in the vehicle being tested and/or the donor vehicle.

NOTES:

- If a control module or a component is suspect and the vehicle remains under manufacturer warranty, refer to the Warranty Policy and Procedures manual, or determine if any prior approval programme is in operation, prior to the installation of a new module/component.
- Generic scan tools may not read the codes listed, or may read only 5-digit codes. Match the 5 digits from the scan tool to the first 5 digits of the 7-digit code listed to identify the fault (the last 2 digits give extra information read by the manufacturer-approved diagnostic system).
- When performing voltage or resistance tests, always use a digital multimeter accurate to three decimal places, and with an up-to-date calibration certificate. When testing resistance always take the resistance of the digital multimeter leads into account.
- Check and rectify basic faults before beginning diagnostic routines involving pinpoint tests.
- Inspect connectors for signs of water ingress, and pins for damage and/or corrosion.
- If DTCs are recorded and, after performing the pinpoint tests, a fault is not present, an intermittent concern may be the cause. Always check for loose connections and corroded terminals.
- Check DDW for open campaigns. Refer to the corresponding bulletins and SSMs which may be valid for the specific customer complaint and carry out the recommendations as required.

The table below lists all Diagnostic Trouble Codes (DTCs) that could be logged in the Navigation Control Module (NCM). For additional diagnosis and testing information, refer to the relevant Diagnosis and Testing section in the workshop manual.

For additional information, refer to: Navigation System (415-00 Information and Entertainment System - General Information, Diagnosis and Testing).

DTC	DESCRIPTION	POSSIBLE CAUSES	ACTION
B100F-25	Video Input "B" - Signal shape /waveform failure	■ Rear proximity camera video input disconnected ■ Camera malfunction	■ Check the video signal connection and whether it is being broadcasted. Where available, configure the rear / proximity cameras using the approved diagnostic system. Check whether the rear / proximity cameras are broadcasting an image by entering touch screen diagnostics selecting 'Video Input Test' then press 'Rear View / Proximity Camera'. Check whether a clear image is displayed. Refer to the electrical circuit diagrams and check the video signal circuit between the rear / proximity cameras and the Camera Control Module ■ If the problem persists, renew the camera or cameras. Clear the DTC and perform an on demand self test
B1010-25	Video Input "C" - Signal shape /waveform failure	■ Television/Rear seat entertainment video input disconnected ■ TV/DVD malfunction	■ Check the video signal connection and whether it is being broadcasted. Where available, configure the TV or DVD using the manufacturers approved diagnostic system. Check whether the TV or Rear Seat Entertainment Module (RSE) is broadcasting an image by entering diagnostics selecting 'Video Input Test' then press 'TV/DVD'. Check whether a clear image is displayed. Refer to the electrical circuit diagrams and check the video signal circuit from the TV or Rear Seat Entertainment (RSE) module ■ If the problem persists, renew the Television or Rear Seat Entertainment Module (RSE) or DVD module. Refer to the Warranty Policy and Procedures manual, or determine if any prior approval programme is in operation, prior to the installation of a new module/component
B108E-14	Display - Circuit short to ground or open	■ Internal display circuit short circuit to	■ Clear the DTC, switch off the ignition and allow sufficient time for the infotainment relay to power down. If the DTC persists contact Dealer Technical Support (DTS)

		ground, open circuit	
B108E-17	Display - Circuit voltage above threshold	■ Internal display circuit short circuit to ground, open circuit	■ Clear the DTC, switch off the ignition and allow sufficient time for the infotainment relay to power down. If the DTC persists contact Dealer Technical Support (DTS)
B108E-1C	Display - Circuit voltage out of range	■ Internal display circuit short circuit to ground, open circuit	■ Clear the DTC, switch off the ignition and allow sufficient time for the infotainment relay to power down. If the DTC persists contact Dealer Technical Support (DTS)
B108E-87	Display- Missing message	■ Display communication failure	■ Clear the DTC and switch off the ignition. Allow sufficient time for the infotainment relay to power down and retest. If DTC persists reprogram the Front Entertainment Module (FEM)
B108E-88	Display - Bus off	■ Bus off ■ Front Entertainment Module (FEM) internal failure	■ Clear the DTC and switch off the ignition. Allow sufficient time for the infotainment relay to power down and retest. If DTC persists renew the Front Entertainment Module (FEM). Refer to the Warranty Policy and Procedures manual, or determine if any prior approval programme is in operation, prior to the installation of a new module/component
B119F-11	GPS Antenna - Circuit short to ground	■ Global Positioning System (GPS) antenna circuit short circuit to ground	■ Check the global positioning system (GPS) [blue] connector to the Front Entertainment Module (FEM) for security and integrity. Check that the GPS antenna is not damaged. Refer to the electrical circuit diagrams and check the circuit between the GPS antenna and the Front Entertainment Module (FEM). Test the GPS outside in open space for more than 2 minutes after power on. Enter touch screen diagnostics and select ‘Next’, ‘Vehicle

			Information’ then 'GPS Information'. Check that HDOP is less than 5 and GPS satellites show more than 4 ‘P’s
B119F-13	GPS Antenna - Circuit open	■ Antenna circuit open circuit ■ Antenna not connected	■ Check the global positioning system (GPS) [blue] connector to the Front Entertainment Module (FEM) for security and integrity. Check that the GPS antenna is not damaged. Refer to the electrical circuit diagrams and check the circuit between the GPS antenna and the Front Entertainment Module (FEM). Test the GPS outside in open space for more than 2 minutes after power on. Enter touch screen diagnostics and select ‘Next’, ‘Vehicle Information’ then 'GPS Information'. Check that HDOP is less than 5 and GPS satellites show more than 4 ‘P’s
B11A3-49	Gyroscope - Internal electronic failure	■ Internal gyroscope failure	■ Enter touch screen diagnostics and select ‘Next’, ‘Vehicle information’ then ‘Vehicle sensor’. Check that the Gyro sensor voltage is around 2500mV when stationary, but changes along the bearing when the car is moving while turning the steering wheel. If the Gyro sensor voltage or bearing does not change when the car is moving while turning the steering wheel renew the Front Entertainment Module (FEM). Refer to the Warranty Policy and Procedures manual, or determine if any prior approval programme is in operation, prior to the installation of a new module/component
B121B-13	Keypad Input Switch - Circuit open	■ Touch screen display input key circuit open circuit ■ Touch screen display input key fault	■ Check whether the input keys are working by entering the touch screen diagnostics and selecting ‘Hard Key Test’. If one or more of the input keys do not respond (except audio off) renew the Front Entertainment Module. Refer to the Warranty Policy and Procedures manual, or determine if any prior approval programme is in operation, prior to the installation of a new module /component
B121C-13	Hard Drive - Circuit open		■ Check whether the Hard Drive is connected by entering the touch screen diagnostics selecting ‘Next’ then ‘HDD Information’. Check that the hard drive serial number, operating time and model name appear. If the SMART

		■ Module internal hard drive open circuit /not connected	test fails 'NG' renew the Front Entertainment Module (FEM). Refer to the Warranty Policy and Procedures manual, or determine if any prior approval programme is in operation, prior to the installation of a new module /component
B121C-44	Hard Drive - Data memory failure	■ internal hard drive data memory failure	■ Check whether the Hard Drive is connected by entering the touch screen diagnostics selecting 'Next' then 'HDD Information'. Check that the hard drive serial number, operating time and model name appear. If the SMART test fails 'NG' renew the Front Entertainment Module (FEM). Refer to the Warranty Policy and Procedures manual, or determine if any prior approval programme is in operation, prior to the installation of a new module /component
B1D56-14	Antenna #3 - Circuit short to ground or open	■ Vehicle Information and Communication Antenna (VICS) disconnected ■ Vehicle Information and Communication Antenna (VICS) circuit short circuit to ground, open circuit	■ Enter touch screen diagnostics and select 'Next', 'Vehicle information', 'VICS' then 'Radio Wave Beacon' and 'Infrared beacon'. Check that Time and Beacon number data are shown. Check that the Vehicle Information and Communication System (VICS) antenna or circuit is not damaged ■ Refer to the electrical circuit diagrams and check the circuit between the Vehicle Information and Communication System (VICS) antenna and the Front Entertainment Module (FEM) for short to ground, open circuit
U1A01-56	Communication Link - Invalid /incomplete	■ Internal communication failure	■ Clear the DTC, switch off the ignition and allow sufficient time for the infotainment relay to power down. If the DTC persists reprogram the Front Entertainment Module (FEM)

	configuration		■ If DTC still persists renew the Front Entertainment Module. Refer to the Warranty Policy and Procedures manual, or determine if any prior approval programme is in operation, prior to the installation of a new module /component
U1A4B-82	Control Module Processor B - Alive/sequence counter incorrect / not updated	■ Internal communication failure	■ Clear the DTC, switch off the ignition and allow sufficient time for the infotainment relay to power down. Enter touch screen diagnostics and select ‘Configurations’. Check that the vehicle type is displayed and the sub CPU SW version are shown. If the DTC persists reprogram the Front Entertainment Module (FEM). Refer to the Warranty Policy and Procedures manual, or determine if any prior approval programme is in operation, prior to the installation of a new module/component
U1A4B-87	Control Module Processor B - Missing message	■ Internal communication failure	■ Clear the DTC, switch off the ignition and allow sufficient time for the infotainment relay to power down. Re-configure the Front Entertainment Module (FEM) using the manufacturers approved diagnostic system ■ If DTC persists renew the Front Entertainment Module (FEM). Refer to the Warranty Policy and Procedures manual, or determine if any prior approval programme is in operation, prior to the installation of a new module /component
U2005-62	Vehicle Speed - Signal compare failure	■ Vehicle speed and calculated GPS system vehicle speed mismatch ■ Vehicle speed signal circuit between Anti-Lock Braking (ABS) Module and Navigation	■ Check the Anti-Lock Braking (ABS) Module connector and wiring harness. using the manufacturer approved diagnostic system, enter diagnostics and select 'Vehicle Signals'. Check that the vehicle speeds both increase when the car is moving ■ Refer to the electrical circuit diagrams and check vehicle speed signal circuit between the Anti-Lock Braking (ABS) Module and Navigation System Module (NAV) for short to ground, short to power, open circuit

		System Module (NAV) short to ground, short to power	
U2101-00	Control Module Configuration Incompatible - No sub type information	■ Car Configuration File (CCF) parameter mismatch ■ Invalid /incomplete configuration	■ Enter touch screen diagnostics and select 'Self Test' and wait for the test results to complete. The Car Configuration File (CCF) mismatch parameter(s) will be listed in the description with DTC 'U210100'. The Car Configuration File (CCF) parameters values for Brand, HLDF, MMMType, Navigation, MMMJapan, MMMFitted, MMMVariant, NavRegion, MMM3, VICS, GPSReceiver, Intercom, ParkingAidDisplay, HandOfDrive or AmbientLight can be found by entering the touch screen diagnostics 'Vehicle Configurations' and pressing 'Next' until the parameter is shown. Contact Dealer Technical Support (DTS) reporting the Car Configuration (CCF) parameter name and value ■ Contact dealer technical support to assist in re-configuring the Car Configuration File (CCF) using the manufacturers approved diagnostic system. Clear the DTC, switch off the ignition and allow sufficient time for the infotainment relay to power down
U2101-4A	Control Module Configuration Incompatible - Incorrect component installed	■ Navigation map license mismatch ■ Invalid /incomplete configuration	■ If the map screen is not shown after entering diagnostics and pressing 'I Agree' then start routine 0x6024 'Update Map Configuration' with option 0x03. Allow 30 seconds for the routine to complete before entering the map screen. If a map screen is still not shown Contact Dealer Technical Support (DTS) ■ Enter the navigation menu and select 'Map changer'. Check that the map regions match the Front Entertainment Module market. The Car Configuration File parameters values for MapConfiguration can be found by entering the touch screen diagnostics 'Vehicle Configurations' and pressing 'Next' until the parameter is shown. Contact Dealer Technical Support (DTS) to assist in re-configuring the Car Configuration File (CCF) for the map market using the manufacturers approved diagnostic system. Clear the DTC, switch off the ignition and allow sufficient time for the infotainment relay to power down

U210A-85	Temperature Sensor - Signal above allowable range	■ Front Entertainment Module (FEM) over temperature ■ Interior cabin over heating	■ Cool the vehicle interior down by ensuring it is in the shade and have the A/C on cool. Enter touch screen diagnostics and select 'Vehicle Signals'. Check the Media Orientated System Transport (MOST) FOT temperature ■ When cool, clear the DTC and retest
U3003-17	Battery Voltage - Circuit voltage above threshold	■ Battery voltage above 16 volts	■ Check vehicle battery and charging system. Refer to the relevant section in the workshop manual. Refer to the electrical circuit diagrams and check the power supply circuits to the module

GENERAL INFORMATION

DESCRIPTION AND OPERATION

OCCUPANT CLASSIFICATION SYSTEM (OCS)

CAUTION:

Diagnosis by substitution from a donor vehicle is **NOT** acceptable. Substitution of control modules does not guarantee confirmation of a fault, and may also cause additional faults in the vehicle being tested and/or the donor vehicle

NOTES:

- If the control module or a component is suspect and the vehicle remains under manufacturer warranty, refer to the warranty policy and procedures manual, or determine if any prior approval programme is in operation, prior to the installation of a new module/component
- Generic scan tools may not read the codes listed, or may read only 5-digit codes. Match the 5 digits from the scan tool to the first 5 digits of the 7-digit code listed to identify the fault (the last 2 digits give extra information read by the manufacturer-approved diagnostic system)
- When performing voltage or resistance tests, always use a digital multimeter accurate to three decimal places and with a current calibration certificate. When testing resistance, always take the resistance of the digital multimeter leads into account
- Check and rectify basic faults before beginning diagnostic routines involving pinpoint tests
- Inspect connectors for signs of water ingress, and pins for damage and/or corrosion
- If diagnostic trouble codes are recorded and, after performing the pinpoint tests, a fault is not present, an intermittent concern may be the cause. Always check for loose connections and corroded terminals
- Where an 'on demand self-test' is referred to, this can be accessed via the 'diagnostic trouble code monitor' tab on the manufacturers approved diagnostic system
- Check DDW for open campaigns. Refer to the corresponding bulletins and SSMs which may be valid for the specific customer complaint and carry out the recommendations as required

The table below lists all Diagnostic Trouble Codes (DTCs) that could be logged in the Occupant Classification System Module, for additional Diagnosis and Testing information refer to the relevant Diagnosis and Testing Section. For additional information, refer to: Air Bag Supplemental Restraint System (SRS) (501-20B Supplemental Restraint System, Diagnosis and Testing).

DTC	DESCRIPTION	POSSIBLE CAUSES	ACTION
B1193-53	Crash Event Storage Full and Locked - De-activated	■ Event information, system deactivated ■ A collision event has occurred ■ Maximum number of events stored	■ Clear DTC, cycle ignition and re-test. If DTC remains check for other DTCs and refer to relevant DTC Index
B1A54-01	Occupant Belt Tension Sensor - General electrical failure	■ General signal failure ■ Belt tension sensor has jammed for 3 seconds or longer ■ Belt tension sensor failure	■ Refer to the electrical circuit diagrams and check belt tension sensor circuit. Renew the safety belt buckle assembly
B1A54-02	Occupant Belt Tension Sensor - General signal failure	■ General signal failure ■ Pressure sensor signal short	■ Refer to the electrical circuit diagrams and check belt tension sensor circuit. Renew the safety belt buckle assembly

		circuit to belt tension sensor signal at initialization ■ Belt tension sensor failure	
B1A54-11	Occupant Belt Tension Sensor - Circuit short to ground	■ Pressure sensor circuit short circuit to ground for 3 seconds or longer ■ Belt tension sensor failure	■ Refer to the electrical circuit diagrams and check belt tension sensor circuit. Renew the safety belt buckle assembly
B1A54-12	Occupant Belt Tension Sensor - Circuit short to battery	■ Pressure sensor circuit short circuit to power for 3 seconds or longer ■ Belt tension sensor failure	■ Refer to the electrical circuit diagrams and check belt tension sensor circuit. Renew the safety belt buckle assembly
B1A54-13	Occupant Belt Tension Sensor - Circuit open	■ Pressure sensor circuit open circuit for 3 seconds or longer ■ Belt tension sensor failure	■ Refer to the electrical circuit diagrams and check belt tension sensor circuit. Renew the safety belt buckle assembly
B1A62-	Pressure Sensor		

02	- General signal failure	■ Occupant pressure sensor general signal failure ■ Occupant pressure sensor signal short circuit to belt tension sensor signal at initialization ■ Occupant pressure sensor failure	■ Refer to the electrical guide and check the occupant pressure sensor circuit. Renew the sensor
B1A62-11	Pressure Sensor - Circuit short to ground	■ Occupant pressure sensor signal short circuit to ground ■ Restraints Control module fault	■ Refer to the electrical guide and check the occupant pressure sensor circuit. Renew the Control module. Refer to the warranty policy and procedures manual if a module is suspect
B1A62-12	Pressure Sensor - Circuit short to battery	■ Occupant pressure sensor signal short circuit to power ■ Restraints Control module fault	■ Refer to the electrical guide and check the occupant pressure sensor circuit. Renew the Control module. Refer to the warranty policy and procedures manual if a module is suspect
B1A62-	Pressure Sensor		

7A	- Fluid leak or seal failure	■ Occupant pressure sensor fluid leak or seal failure ■ Restraints Control module fault	■ Clear the DTC and retest. If the problem persists, renew the restraints Control module. Refer to the warranty policy and procedures manual if a module is suspect
B1A62-7B	Pressure Sensor - Low fluid level	■ Occupant pressure sensor bladder low fluid level	■ Renew the occupant pressure sensor
U0001-00	High Speed CAN Communication Bus - No sub type information	■ Bus off ■ CAN High and CAN Low are shorted together	■ Refer to the electrical circuit diagrams and check the power and ground connections to the module. Using the manufacturer approved diagnostic system, complete a CAN network integrity test. Refer to the electrical circuit diagrams and check the CAN network
U0151-00	Lost Communication With Restraints Control Module - No sub type information	■ Lost communications - CAN or hardwired ■ Restraints Control module fault	■ Refer to the electrical circuit diagrams and check the power and ground connections to the module. Using the manufacturer approved diagnostic system, complete a CAN network integrity test. Refer to the electrical circuit diagrams and check the CAN network between the Restraints Control Module and Safety Belt System
U0300-00	Internal Control Module Software	■ Module is not configured correctly	■ Check correct occupancy classification system module is installed for vehicle specification. Check for other DTCs and refer to relevant DTC Index. Configure the module using the approved diagnostic system

	Incompatibility - No sub type information	■ Master config ID does not correspond	
U3000-04	Control Module - System internal failures	■ Restraints Control module fault	■ Renew the occupancy classification system module. Refer to the warranty policy and procedures manual if a module is suspect
U3000-51	Control Module - Not programmed	■ Restraints Control module not configured ■ Can also be set by a harness fault	■ Configure the module using the approved diagnostic system
U3000-54	Control module - Missing calibration	■ Missing calibration ■ Empty seat calibration required	■ Configure the module using the approved diagnostic system
U3003-16	Battery Voltage - Circuit voltage below threshold	■ Battery voltage below threshold (8 volts)	■ Check vehicle battery and charging system. Refer to the relevant section in the workshop manual
U3003-17	Battery Voltage - Circuit voltage above threshold	■ Battery voltage above threshold (18 volts)	■ Check vehicle battery and charging system. Refer to the relevant section in the workshop manual. Refer to the electrical circuit diagrams and check the power supply circuits to the module

2012.0 RANGE ROVER (LM), 100-00

GENERAL INFORMATION

DESCRIPTION AND OPERATION

PARKING AID CONTROL MODULE (PACM)

CAUTION:

Diagnosis by substitution from a donor vehicle is **NOT** acceptable. Substitution of control modules does not guarantee confirmation of a fault, and may also cause additional faults in the vehicle being tested and/or the donor vehicle

NOTES:

- If the control module or a component is suspect and the vehicle remains under manufacturer warranty, refer to the warranty policy and procedures manual, or determine if any prior approval programme is in operation, prior to the installation of a new module/component
- Generic scan tools may not read the codes listed, or may read only 5-digit codes. Match the 5 digits from the scan tool to the first 5 digits of the 7-digit code listed to identify the fault (the last 2 digits give extra information read by the manufacturer-approved diagnostic system)
- When performing voltage or resistance tests, always use a digital multimeter accurate to three decimal places and with a current calibration certificate. When testing resistance, always take the resistance of the digital multimeter leads into account
- Check and rectify basic faults before beginning diagnostic routines involving pinpoint tests
- Inspect connectors for signs of water ingress, and pins for damage and/or corrosion
- If diagnostic trouble codes are recorded and, after performing the pinpoint tests, a fault is not present, an intermittent concern may be the cause. Always check for loose connections and corroded terminals
- Where an 'on demand self-test' is referred to, this can be accessed via the 'diagnostic trouble code monitor' tab on the manufacturers approved diagnostic system
- Check DDW for open campaigns. Refer to the corresponding bulletins and SSMs which may be valid for the specific customer complaint and carry out the recommendations as required

The table below lists all Diagnostic Trouble Codes (DTCs) that could be logged in the Parking Aid Control Module (PACM). For additional Diagnosis and Testing information refer to the relevant Diagnosis and Testing Section.

For additional information, refer to: Parking Aid (413-13 Parking Aid, Diagnosis and Testing).

DTC	DESCRIPTION	POSSIBLE CAUSES	ACTION
B1B36-01	Front Right Outer Sensor - General electrical failure	■ General electric failure ■ Signal circuit short circuit to ground ■ Signal circuit high resistance ■ Connecter /harness problem ■ Sensor missing	■ If DTCs B1B3601, B1B3801, B1B4001 and B1B4201 are all present, check the car configuration file and vehicle specification to ensure front sensors have been specified. If correctly specified, check that front bumper has sensors and wiring loom installed. Check the front bumper wiring harness connector to main wiring loom for security and integrity. Check the connecters to the parking aid module for security and integrity. Clear DTCs and power up parking aid system and confirm problem resolution. If problem persists, check the car configuration file to ensure correct configuration for front and rear sensors relative to installed vehicle specification. Check whether the correct parking aid module has been installed to the vehicle. Check the correct/latest software has been installed. Correct the car configuration file or update to the correct software, clear DTCs, power up parking aid system and confirm problem resolution. Refer to the electrical circuit diagrams and check the front bumper harness for short circuit between signal and ground wires within harness. Check the front bumper harness for short circuit to bodywork or other grounded components (chafing). Check the wiring and sensor connecters for integrity and damage, then re-connect sensor and confirm connection (connector latched). Clear DTC, power up parking aid system and check corrective action. If the problem persists then renew the sensor. Clear DTC, power up parking aid system and check corrective action
B1B36-12	Front Right Outer Sensor - Circuit short to battery	■ Signal circuit short circuit to power	■ Check front bumper harness for signs of damage. Check the connecter for integrity and damage, then re-connect sensor to confirm connection. Cycle

			ignition to power up parking aid system and check corrective action. Refer to the electrical circuit diagrams and check the sensor circuit. If the problem persists, renew the front right outer sensor only
B1B36-96	Front Right Outer Sensor - Component internal failure	■ Component internal failure	■ Check front bumper harness for signs of damage. Check the connecter for integrity and damage, then re-connect sensor to confirm connection. Cycle ignition to power up parking aid system and check corrective action. Refer to the electrical circuit diagrams and check the sensor circuit. If the problem persists, renew the front right outer sensor only
B1B38-01	Front Right Inner Sensor - General electrical failure	■ General electric failure ■ Signal circuit short circuit to ground ■ Signal circuit high resistance ■ Connecter /harness problem	■ If DTCs B1B3601, B1B3801, B1B4001 and B1B4201 are all present, check the car configuration file and vehicle specification to ensure front sensors have been specified. If correctly specified, check that front bumper has sensors and wiring loom installed. Check the front bumper wiring harness connector to main wiring loom for security and integrity. Check the connecters to the parking aid module for security and integrity. Clear DTCs and power up parking aid system and confirm problem resolution. If problem persists, check the car configuration file to ensure correct configuration for front and rear sensors relative to installed vehicle specification. Check whether the correct parking aid module has been installed to the vehicle. Check the correct/latest software has been installed. Correct the car configuration file or update to the correct software, clear DTCs, power up parking aid system and confirm problem resolution. Refer to the electrical circuit diagrams and check the front bumper harness for short circuit between signal and ground wires within harness. Check the front bumper harness for short circuit to bodywork or other grounded components (chafing). Check the wiring and sensor connecters for integrity and damage, then re-connect sensor and confirm connection (connector latched). Clear DTC, power up parking aid system and check corrective action. If the problem persists then renew the sensor. Clear DTC, power up parking aid system and check corrective action
B1B38-12	Front Right Inner Sensor - Circuit short to	■ Signal circuit short circuit to power	■ Check front bumper harness for signs of damage. Check the connecter for integrity and damage, then re-connect sensor to confirm connection. Cycle ignition to power up parking aid system and check corrective action. Refer to

	battery		the electrical circuit diagrams and check the sensor circuit. If the problem persists, renew the front right inner sensor only
B1B38-96	Front Right Inner Sensor - Component internal failure	■ Component internal failure	■ Check front bumper harness for signs of damage. Check the connecter for integrity and damage, then re-connect sensor to confirm connection. Cycle ignition to power up parking aid system and check corrective action. Refer to the electrical circuit diagrams and check the sensor circuit. If the problem persists, renew the front right inner sensor only
B1B40-01	Front Left Outer Sensor - General electrical failure	■ General electric failure ■ Signal circuit short circuit to ground ■ Signal circuit high resistance ■ Connecter /harness problem	■ If DTCs B1B3601, B1B3801, B1B4001 and B1B4201 are all present, check the car configuration file and vehicle specification to ensure front sensors have been specified. If correctly specified, check that front bumper has sensors and wiring loom installed. Check the front bumper wiring harness connector to main wiring loom for security and integrity. Check the connecters to the parking aid module for security and integrity. Clear DTCs and power up parking aid system and confirm problem resolution. If problem persists, check the car configuration file to ensure correct configuration for front and rear sensors relative to installed vehicle specification. Check whether the correct parking aid module has been installed to the vehicle. Check the correct/latest software has been installed. Correct the car configuration file or update to the correct software, clear DTCs, power up parking aid system and confirm problem resolution. Refer to the electrical circuit diagrams and check the front bumper harness for short circuit between signal and ground wires within harness. Check the front bumper harness for short circuit to bodywork or other grounded components (chafing). Check the wiring and sensor connecters for integrity and damage, then re-connect sensor and confirm connection (connector latched). Clear DTC, power up parking aid system and check corrective action. If the problem persists then renew the sensor. Clear DTC, power up parking aid system and check corrective action
B1B40-12	Front Left Outer Sensor - Circuit short to battery	■ Signal circuit short circuit to power	■ Check front bumper harness for signs of damage. Check the connecter for integrity and damage, then re-connect sensor to confirm connection. Cycle

			ignition to power up parking aid system and check corrective action. Refer to the electrical circuit diagrams and check the sensor circuit. If the problem persists, renew the front left outer sensor only
B1B40-96	Front Left Outer Sensor - Component internal failure	■ Component internal failure	■ Check front bumper harness for signs of damage. Check the connecter for integrity and damage, then re-connect sensor to confirm connection. Cycle ignition to power up parking aid system and check corrective action. Refer to the electrical circuit diagrams and check the sensor circuit. If the problem persists, renew the front left outer sensor only
B1B42-01	Front Left Inner Sensor - General electrical failure	■ General electric failure ■ Signal circuit short circuit to ground ■ Signal circuit high resistance ■ Connecter /harness problem	■ If DTCs B1B3601, B1B3801, B1B4001 and B1B4201 are all present, check the car configuration file and vehicle specification to ensure front sensors have been specified. If correctly specified, check that front bumper has sensors and wiring loom installed. Check the front bumper wiring harness connector to main wiring loom for security and integrity. Check the connecters to the parking aid module for security and integrity. Clear DTCs and power up parking aid system and confirm problem resolution. If problem persists, check the car configuration file to ensure correct configuration for front and rear sensors relative to installed vehicle specification. Check whether the correct parking aid module has been installed to the vehicle. Check the correct/latest software has been installed. Correct the car configuration file or update to the correct software, clear DTCs, power up parking aid system and confirm problem resolution. Refer to the electrical circuit diagrams and check the front bumper harness for short circuit between signal and ground wires within harness. Check the front bumper harness for short circuit to bodywork or other grounded components (chafing). Check the wiring and sensor connecters for integrity and damage, then re-connect sensor and confirm connection (connector latched). Clear DTC, power up parking aid system and check corrective action. If the problem persists then renew the sensor. Clear DTC, power up parking aid system and check corrective action
B1B42-12	Front Left Inner Sensor - Circuit short to	■ Signal circuit short circuit to power	■ Check front bumper harness for signs of damage. Check the connecter for integrity and damage, then re-connect sensor to confirm connection. Cycle ignition to power up parking aid system and check corrective action. Refer to

	battery		the electrical circuit diagrams and check the sensor circuit. If the problem persists, renew the front left inner sensor only
B1B42-96	Front Left Inner Sensor - Component internal failure	■ Component internal failure	■ Check front bumper harness for signs of damage. Check the connecter for integrity and damage, then re-connect sensor to confirm connection. Cycle ignition to power up parking aid system and check corrective action. Refer to the electrical circuit diagrams and check the sensor circuit. If the problem persists, renew the front left inner sensor only
B1B44-01	Rear Right Outer Sensor - General electrical failure	■ General electric failure ■ Signal circuit short circuit to ground ■ Signal circuit high resistance ■ Connecter /harness problem	■ If DTCs B1B3601, B1B3801, B1B4001 and B1B4201 are all present, check the car configuration file and vehicle specification to ensure front sensors have been specified. If correctly specified, check that front bumper has sensors and wiring loom installed. Check the front bumper wiring harness connector to main wiring loom for security and integrity. Check the connecters to the parking aid module for security and integrity. Clear DTCs and power up parking aid system and confirm problem resolution. If problem persists, check the car configuration file to ensure correct configuration for front and rear sensors relative to installed vehicle specification. Check whether the correct parking aid module has been installed to the vehicle. Check the correct/latest software has been installed. Correct the car configuration file or update to the correct software, clear DTCs, power up parking aid system and confirm problem resolution. Refer to the electrical circuit diagrams and check the front bumper harness for short circuit between signal and ground wires within harness. Check the front bumper harness for short circuit to bodywork or other grounded components (chafing). Check the wiring and sensor connecters for integrity and damage, then re-connect sensor and confirm connection (connector latched). Clear DTC, power up parking aid system and check corrective action. If the problem persists then renew the sensor. Clear DTC, power up parking aid system and check corrective action
B1B44-12	Rear Right Outer Sensor - Circuit short to battery	■ Signal circuit short circuit to power	■ Check rear bumper harness. Check the connecter for integrity and damage, then re-connect sensor to confirm connection. Cycle ignition to power up

			parking aid system and check corrective action. Refer to the electrical circuit diagrams and check the sensor circuit. If the problem persists, renew the rear right outer sensor only
B1B44-96	Rear Right Outer Sensor - Component internal failure	■ Component internal failure	■ Check rear bumper harness. Check the connecter for integrity and damage, then re-connect sensor to confirm connection. Cycle ignition to power up parking aid system and check corrective action. Refer to the electrical circuit diagrams and check the sensor circuit. If the problem persists, renew the rear right outer sensor only
B1B46-01	Rear Right Inner Sensor - General electrical failure	■ General electric failure ■ Signal circuit short circuit to ground ■ Signal circuit high resistance ■ Connecter /harness problem	■ If DTCs B1B3601, B1B3801, B1B4001 and B1B4201 are all present, check the car configuration file and vehicle specification to ensure front sensors have been specified. If correctly specified, check that front bumper has sensors and wiring loom installed. Check the front bumper wiring harness connector to main wiring loom for security and integrity. Check the connecters to the parking aid module for security and integrity. Clear DTCs and power up parking aid system and confirm problem resolution. If problem persists, check the car configuration file to ensure correct configuration for front and rear sensors relative to installed vehicle specification. Check whether the correct parking aid module has been installed to the vehicle. Check the correct/latest software has been installed. Correct the car configuration file or update to the correct software, clear DTCs, power up parking aid system and confirm problem resolution. Refer to the electrical circuit diagrams and check the front bumper harness for short circuit between signal and ground wires within harness. Check the front bumper harness for short circuit to bodywork or other grounded components (chafing). Check the wiring and sensor connecters for integrity and damage, then re-connect sensor and confirm connection (connector latched). Clear DTC, power up parking aid system and check corrective action. If the problem persists then renew the sensor. Clear DTC, power up parking aid system and check corrective action
B1B46-12	Rear Right Inner Sensor - Circuit short to	■ Signal circuit short circuit to power	■ Check rear bumper harness. Check the connecter for integrity and damage, then re-connect sensor to confirm connection. Cycle ignition to power up parking aid system and check corrective action. Refer to the electrical circuit

	battery		diagrams and check the sensor circuit. If the problem persists, renew the rear right inner sensor only
B1B46-96	Rear Right Inner Sensor - Component internal failure	■ Component internal failure	■ Check rear bumper harness. Check the connecter for integrity and damage, then re-connect sensor to confirm connection. Cycle ignition to power up parking aid system and check corrective action. Refer to the electrical circuit diagrams and check the sensor circuit. If the problem persists, renew the rear right inner sensor only
B1B48-01	Rear Left Outer Sensor - General electrical failure	■ General electric failure ■ Signal circuit short circuit to ground ■ Signal circuit high resistance ■ Connecter /harness problem	■ If DTCs B1B3601, B1B3801, B1B4001 and B1B4201 are all present, check the car configuration file and vehicle specification to ensure front sensors have been specified. If correctly specified, check that front bumper has sensors and wiring loom installed. Check the front bumper wiring harness connector to main wiring loom for security and integrity. Check the connecters to the parking aid module for security and integrity. Clear DTCs and power up parking aid system and confirm problem resolution. If problem persists, check the car configuration file to ensure correct configuration for front and rear sensors relative to installed vehicle specification. Check whether the correct parking aid module has been installed to the vehicle. Check the correct/latest software has been installed. Correct the car configuration file or update to the correct software, clear DTCs, power up parking aid system and confirm problem resolution. Refer to the electrical circuit diagrams and check the front bumper harness for short circuit between signal and ground wires within harness. Check the front bumper harness for short circuit to bodywork or other grounded components (chafing). Check the wiring and sensor connecters for integrity and damage, then re-connect sensor and confirm connection (connector latched). Clear DTC, power up parking aid system and check corrective action. If the problem persists then renew the sensor. Clear DTC, power up parking aid system and check corrective action
B1B48-12	Rear Left Outer Sensor - Circuit short to battery	■ Signal circuit short circuit to power	■ Check rear bumper harness. Check the connecter for integrity and damage, then re-connect sensor to confirm connection. Cycle ignition to power up

			parking aid system and check corrective action. Refer to the electrical circuit diagrams and check the sensor circuit. If the problem persists, renew the rear left outer sensor only
B1B48-96	Rear Left Outer Sensor - Component internal failure	■ Component internal failure	■ Check rear bumper harness. Check the connecter for integrity and damage, then re-connect sensor to confirm connection. Cycle ignition to power up parking aid system and check corrective action. Refer to the electrical circuit diagrams and check the sensor circuit. If the problem persists, renew the rear left outer sensor only
B1B50-01	Rear Left Inner Sensor - General electrical failure	■ General electric failure ■ Signal circuit short circuit to ground ■ Signal circuit high resistance ■ Connecter /harness problem	■ If DTCs B1B3601, B1B3801, B1B4001 and B1B4201 are all present, check the car configuration file and vehicle specification to ensure front sensors have been specified. If correctly specified, check that front bumper has sensors and wiring loom installed. Check the front bumper wiring harness connector to main wiring loom for security and integrity. Check the connecters to the parking aid module for security and integrity. Clear DTCs and power up parking aid system and confirm problem resolution. If problem persists, check the car configuration file to ensure correct configuration for front and rear sensors relative to installed vehicle specification. Check whether the correct parking aid module has been installed to the vehicle. Check the correct/latest software has been installed. Correct the car configuration file or update to the correct software, clear DTCs, power up parking aid system and confirm problem resolution. Refer to the electrical circuit diagrams and check the front bumper harness for short circuit between signal and ground wires within harness. Check the front bumper harness for short circuit to bodywork or other grounded components (chafing). Check the wiring and sensor connecters for integrity and damage, then re-connect sensor and confirm connection (connector latched). Clear DTC, power up parking aid system and check corrective action. If the problem persists then renew the sensor. Clear DTC, power up parking aid system and check corrective action
B1B50-12	Rear Left Inner Sensor - Circuit short to	■ Signal circuit short circuit to power	■ Check rear bumper harness. Check the connecter for integrity and damage, then re-connect sensor to confirm connection. Cycle ignition to power up parking aid system and check corrective action. Refer to the electrical circuit

	battery		diagrams and check the sensor circuit. If the problem persists, renew the rear left inner sensor only
B1B50-96	Rear Left Inner Sensor - Component internal failure	■ Component internal failure	■ Check rear bumper harness. Check the connecter for integrity and damage, then re-connect sensor to confirm connection. Cycle ignition to power up parking aid system and check corrective action. Refer to the electrical circuit diagrams and check the sensor circuit. If the problem persists, renew the rear left inner sensor only
B1B52-01	Rear Sounder - Park Aid - General electrical failure	■ General electric failure ■ Signal circuit short circuit to ground ■ Signal circuit high resistance ■ Connecter /harness problem	■ Check the connecter for integrity and damage, then re-connect sounder to confirm connection. Cycle ignition to power up parking aid system and check corrective action. Refer to the electrical circuit diagrams and check the sounder circuit. If the problem persists, renew the sounder only
B1B52-12	Rear Sounder - Park Aid - Circuit short to battery	■ Signal circuit short circuit to ground	■ Check the connecter for integrity and damage, then re-connect sounder to confirm connection. Cycle ignition to power up parking aid system and check corrective action. Refer to the electrical circuit diagrams and check the sounder circuit. If the problem persists, renew the sounder only
B1B54-11	Function LED - Park Aid - Circuit short to ground	■ Signal circuit short circuit to ground	■ Check the parking aid switch and LED functionality. Refer to the electrical circuit diagrams and check the circuit. Repair/renew as necessary

B1B54-12	Function LED - Park Aid - Circuit short to battery	■ Signal circuit short circuit to power	■ Check the parking aid switch and LED functionality. Refer to the electrical circuit diagrams and check the circuit. Repair/renew as necessary
B1B57-11	Front Sensors Power Circuit - Circuit short to ground	■ Front sensor power circuit short circuit to ground ■ Connecter /harness problem	■ Check the connecter for integrity and damage, then re-connect sensor to confirm connection. Check the connector. Cycle ignition to power up parking aid system and check corrective action. Refer to the electrical circuit diagrams and check the front bumper circuit. If the problem persists, renew the sounder only
B1B58-11	Rear Sensors Power Circuit - Circuit short to ground	■ Rear sensor power circuit short circuit to ground ■ Connecter /harness problem	■ Check the connecter for integrity and damage, then re-connect sensor to confirm connection. Check the connector. Cycle ignition to power up parking aid system and check corrective action. Refer to the electrical circuit diagrams and check the rear bumper circuit. If the problem persists, renew the sounder only
B1C30-73	Disable Switch - Actuator stuck closed	■ Actuator stuck closed	■ Check the switch function. Refer to the electrical circuit diagrams and check the circuit
U0010-00	Medium Speed CAN Communication Bus - No sub type information	■ Medium speed can bus circuit short circuit to ground, short circuit to power, open circuit,	■ Using the manufacturer approved diagnostic system, perform a CAN network integrity test. Refer to the electrical circuit diagrams and check the medium speed CAN bus circuit for short circuit to ground, short circuit to power, open circuit, high resistance

		high resistance	
U0140-00	Lost Communication With Body Control Module - No sub type information	■ Central junction box power or ground circuit open circuit, high resistance ■ Medium speed CAN bus circuit short circuit to ground, short circuit to power, open circuit, high resistance ■ Central junction box system fault	■ Refer to the electrical circuit diagrams and check the central junction box module power and ground circuits for open circuit, high resistance ■ Using the manufacturer approved diagnostic system, perform a CAN network integrity test. Refer to the electrical circuit diagrams and check the medium speed CAN bus circuit for short circuit to ground, short circuit to power, open circuit, high resistance ■ Using the manufacturer approved diagnostic system, check the central junction box for related DTCs and refer to the relevant DTC index
U0140-87	Lost Communication With Body Control Module - Missing message	■ Central junction box power or ground circuit open circuit, high resistance ■ Medium speed CAN	■ Refer to the electrical circuit diagrams and check the central junction box power and ground circuits for open circuit, high resistance ■ Using the manufacturer approved diagnostic system, perform a CAN network integrity test. Refer to the electrical circuit diagrams and check the medium speed CAN bus circuit for short circuit to ground, short circuit to power, open circuit, high resistance ■ Using the manufacturer approved diagnostic system, check the central junction box for related DTCs and refer to the relevant DTC index

		bus circuit short circuit to ground, short circuit to power, open circuit, high resistance ■ Central junction box system fault	
U0142-00	Lost Communication With Body Control Module "B" - No sub type information	■ Central junction box power or ground circuit open circuit, high resistance ■ Medium speed CAN bus circuit short circuit to ground, short circuit to power, open circuit, high resistance ■ Central junction box system fault	■ Refer to the electrical circuit diagrams and check the central junction box module power and ground circuits for open circuit, high resistance ■ Using the manufacturer approved diagnostic system, perform a CAN network integrity test. Refer to the electrical circuit diagrams and check the medium speed CAN bus circuit for short circuit to ground, short circuit to power, open circuit, high resistance ■ Using the manufacturer approved diagnostic system, check the central junction box for related DTCs and refer to the relevant DTC index

U0155-00	Lost Communication With Instrument Panel Cluster (IPC) Control Module - No sub type information	■ CAN Link ECM/IPC network malfunction	■ Check for other modules reporting CAN Bus off or lost communication faults. Check CAN wiring. Where available, using the manufacturer approved diagnostic system, complete a CAN integrity test. Refer to the electrical circuit diagrams and check the module CAN, power and ground circuits. Refer to the Network Communications section of the workshop manual
U0300-00	Internal Control Module Software Incompatibility - No sub type information	■ Car configuration file mismatch with vehicle specification ■ Incorrect parking aid module installed	■ Using the manufacturer approved diagnostic system, check and update the car configuration file as necessary ■ Install a new parking aid module as necessary
U0422-00	Invalid Data Received From Body Control Module - No sub type information	■ Missing /invalid data from the central junction box	■ Using the manufacturer approved diagnostic system, check the central junction box for related DTCs and refer to the relevant DTC index
U0423-00	Invalid Data Received From Instrument Panel Control Module - No sub type information	■ Missing /invalid data from the instrument cluster	■ Using the manufacturer approved diagnostic system, check the instrument cluster for related DTCs and refer to the relevant DTC index

U0443-00	Invalid Data Received From Body Control Module "B" - No sub type information	■ Missing /invalid data from the central junction box	■ Using the manufacturer approved diagnostic system, check the central junction box for related DTCs and refer to the relevant DTC index
U2100-00	Initial Configuration Not Complete - No sub type information	■ Car configuration file not the same as expected by the parking aid control module	**NOTE:** After updating the car configuration file, set the ignition to on and wait 30 seconds before clearing the DTCs ■ Using the manufacturer approved diagnostic system, check and update the car configuration file as required. Clear the DTC and retest
U2101-00	Control Module Configuration Incompatible - No sub type information	■ Car configuration file information incompatible to blindspot monitoring control modules	■ Check and amend the car configuration file as required using the manufacturer approved diagnostic system
U3000-49	Control Module - Internal electronic failure	■ Audio unit internal electronic failure (internal error)	■ Refer to the electrical circuit diagrams and check the power and ground circuits to the module. Clear the DTC and retest. If the problem persists, renew the module. Refer to the warranty policy and procedures manual if a module is suspect

U3002-81	Vehicle Identification Number - Invalid serial data received	■ Invalid serial data received	■ Configure the module using the manufacturers approved diagnostic system
U3003-62	Battery Voltage - Signal compare failure	■ Signal compare failure	■ Check vehicle battery connections and charging system. Refer to the relevant section in the workshop manual. Refer to the electrical circuit diagrams and check the power supply circuits to the module

GENERAL INFORMATION

DESCRIPTION AND OPERATION

PARKING BRAKE MODULE (PBM)

CAUTION:

Diagnosis by substitution from a donor vehicle is **NOT** acceptable. Substitution of control modules does not guarantee confirmation of a fault, and may also cause additional faults in the vehicle being tested and/or the donor vehicle

NOTES:

- If the control module or a component is suspect and the vehicle remains under manufacturer warranty, refer to the warranty policy and procedures manual, or determine if any prior approval programme is in operation, prior to the installation of a new module/component
- Generic scan tools may not read the codes listed, or may read only 5-digit codes. Match the 5 digits from the scan tool to the first 5 digits of the 7-digit code listed to identify the fault (the last 2 digits give extra information read by the manufacturer-approved diagnostic system)
- When performing voltage or resistance tests, always use a digital multimeter accurate to three decimal places and with a current calibration certificate. When testing resistance, always take the resistance of the digital multimeter leads into account
- Check and rectify basic faults before beginning diagnostic routines involving pinpoint tests
- Inspect connectors for signs of water ingress, and pins for damage and/or corrosion
- If diagnostic trouble codes are recorded and, after performing the pinpoint tests, a fault is not present, an intermittent concern may be the cause. Always check for loose connections and corroded terminals
- Where an 'on demand self-test' is referred to, this can be accessed via the 'diagnostic trouble code monitor' tab on the manufacturers approved diagnostic system
- Check DDW for open campaigns. Refer to the corresponding bulletins and SSMs which may be valid for the specific customer complaint and carry out the recommendations as required

The table below lists all Diagnostic Trouble Codes (DTCs) that could be logged in the Parking Brake Module, for additional Diagnosis and Testing information refer to the relevant Diagnosis and Testing Section.
For additional information, refer to: Parking Brake (206-05 Parking Brake and Actuation, Diagnosis and Testing).

NOTE:

Where reference is made to a drive cycle test, refer to the relevant Diagnosis and Testing Section

DTC	DESCRIPTION	POSSIBLE CAUSES	ACTION
C0062-01	Longitudinal Acceleration Sensor - General electrical failure	■ General electrical failure	■ Check the electrical connections to the sensor. Clear the DTC and retest. If the problem persists, renew the sensor
C0062-02	Longitudinal Acceleration Sensor - General signal failure	■ General signal failure	■ Check the electrical connections to the sensor. Clear the DTC and retest. If the problem persists, renew the sensor
C0062-54	Longitudinal Acceleration Sensor - Missing calibration	■ Missing calibration	■ Check the electrical connections to the sensor. Calibrate the sensor using the manufacturers approved diagnostic system
C1104-68	Brake Bedding Mode - Event information	■ Event information ■ Brake bedding mode has been entered	■ This is not a fault. This is where the parking brake bedding-in mode has been activated. For information on how the bedding-in mode is activated and deactivated, refer to the relevant section in the workshop manual

C1A43-01	Motor Supply - General electrical failure	**NOTE:** The electric motor is part of the parking brake actuator module ■ Internal motor circuit fault	■ Clear DTCs, complete drive cycle 3 to test for normal operation, refer to the relevant drive cycle shown below this table. Refer to the warranty policy and procedures manual if a module is suspect
C1A43-19	Motor Supply - Circuit current above threshold	■ Circuit current above threshold	■ Refer to the electrical circuit diagrams and check the circuit. Check the power and ground connections to the modules
C1A43-67	Motor Supply - Signal incorrect after event	■ Signal incorrect after event	■ Check the functionality of the park brake. Check for other related DTCs. Clear the DTC and retest. If the problem persists, renew the park brake actuator
C1A46-01	Mismatch Between Motor Drive Current and Resultant Force - General electrical failure	■ General electrical failure	■ Check the functionality of the park brake. Check for other related DTCs. Clear the DTC and retest. If the problem persists, renew the park brake actuator
C1A46-64	Mismatch Between Motor Drive Current and Resultant Force - Signal plausibility failure	■ Signal plausibility failure	■ Check the functionality of the park brake. Check for other related DTCs. Clear the DTC and retest. If the problem persists, renew the park brake actuator
C1A47-01	Force Sensor - General electrical failure	**NOTE:** The force sensor is part of the parking	■ Clear DTCs, complete drive cycle 1 to test for normal operation, refer to the relevant drive cycle shown below this table. Refer to the warranty policy and procedures

		brake actuator module ■ Internal force sensor electrical fault	manual if a module is suspect
C1A47-02	Force Sensor - General signal failure	NOTE: The force sensor is part of the parking brake actuator module ■ Internal force sensor plausibility failure	■ Clear DTCs, complete drive cycle 3 to test for normal operation, refer to the relevant drive cycle shown below this table. Refer to the warranty policy and procedures manual if a module is suspect
C1A47-54	Force Sensor - Missing calibration	NOTE: The force sensor is part of the parking brake actuator module ■ Internal force sensor not calibrated	■ Clear DTCs, complete drive cycle 1 to test for normal operation, refer to the relevant drive cycle shown below this table. Refer to the warranty policy and procedures manual if a module is suspect
C1A48-01	Warning Lamp - General electrical failure	■ Parking brake actuator module to instrument cluster warning lamp circuit open circuit ■ Parking brake actuator module	■ Check the parking brake actuator module to instrument cluster warning lamp circuit. Refer to the electrical circuit diagrams. Rectify as necessary. Refer to the warranty policy and procedures manual if a module is suspect. Clear

		to instrument cluster warning lamp circuit short circuit to ground ■ Parking brake actuator module to instrument cluster warning lamp circuit short circuit to power ■ Parking brake actuator module fault ■ Instrument cluster fault	DTCs, complete drive cycle 1 to test for normal operation, refer to the relevant drive cycle shown below this table
C1A53-68	Manual Emergency Release Activated - Event information	■ Emergency release cable activated and stuck/damaged ■ Parking brake cables seized /damaged ■ Actuator jammed	■ Check that the emergency release cable is not permanently pulled (or stuck). Check the parking brake cables for broken or loose connections. Attempt to re-engage the parking brake by pulling the apply switch TWICE. Clear DTCs, complete the following drive cycle. Pull the parking brake emergency release cable. Pull the parking brake switch to the apply position, hold until the parking brake motor has stopped (this may take up to 20 seconds). Release the switch to idle position. For parking brake actuator module manual emergency release
U0073-88	Control Module Communication Bus "A" Off - Bus off	■ High speed CAN bus circuit short circuit to ground, short circuit to power, open circuit, high resistance	■ Refer to the electrical circuit diagrams and check the power and ground connections to the module. Using the manufacturer approved diagnostic system, complete a CAN network

			integrity test. Refer to the electrical circuit diagrams and check the CAN network
U0100-00	Lost Communication With ECM/PCM "A" - No sub type information	■ Engine control module power or ground circuit open circuit, high resistance ■ High speed CAN bus circuit short circuit to ground, short circuit to power, open circuit, high resistance ■ Engine system fault	■ Refer to the electrical circuit diagrams and check the engine control module power and ground circuits for open circuit, high resistance ■ Using the manufacturer approved diagnostic system, perform a CAN network integrity test. Refer to the electrical circuit diagrams and check the high speed CAN bus circuit for short circuit to ground, short circuit to power, open circuit, high resistance ■ Using the manufacturer approved diagnostic system, check the engine control module for related DTCs and refer to the relevant DTC index
U0101-00	Lost Communication with TCM - No sub type information	■ Transmission control module power or ground circuit open circuit, high resistance ■ High speed CAN bus circuit short circuit to ground, short circuit to power, open circuit, high resistance ■ Transmission system fault	■ Refer to the electrical circuit diagrams and check the transmission control module power and ground circuits for open circuit, high resistance ■ Using the manufacturer approved diagnostic system, perform a CAN network integrity test. Refer to the electrical circuit diagrams and check the high speed CAN bus circuit for short circuit to ground, short circuit to power, open circuit, high resistance ■ Using the manufacturer approved diagnostic system, check the transmission control module for related DTCs

			and refer to the relevant DTC index
U0102-00	Lost Communication With Transfer Case Control Module - No sub type information	■ Transfer case control module power or ground circuit open circuit, high resistance ■ High speed CAN bus circuit short circuit to ground, short circuit to power, open circuit, high resistance ■ Transfer case system fault	■ Refer to the electrical circuit diagrams and check the transfer case control module power and ground circuits for open circuit, high resistance ■ Using the manufacturer approved diagnostic system, perform a CAN network integrity test. Refer to the electrical circuit diagrams and check the high speed CAN bus circuit for short circuit to ground, short circuit to power, open circuit, high resistance ■ Using the manufacturer approved diagnostic system, check the transfer case control module for related DTCs and refer to the relevant DTC index
U0121-00	Lost Communication With Anti-Lock Brake System (ABS) Control Module - No sub type information	■ Anti-lock brake system control module power or ground circuit open circuit, high resistance ■ High speed CAN bus circuit short circuit to ground, short circuit to power, open circuit, high resistance ■ Anti-lock brake system fault	■ Refer to the electrical circuit diagrams and check the anti-lock brake system control module power and ground circuits for open circuit, high resistance ■ Using the manufacturer approved diagnostic system, perform a CAN network integrity test. Refer to the electrical circuit diagrams and check the high speed CAN bus circuit for short circuit to ground, short circuit to power, open circuit, high resistance ■ Using the manufacturer approved diagnostic system, check the anti-lock brake system control

			module for related DTCs and refer to the relevant DTC index
U0140-00	Lost Communication With Body Control Module - No sub type information	■ Central junction box power or ground circuit open circuit, high resistance ■ High speed CAN bus circuit short circuit to ground, short circuit to power, open circuit, high resistance ■ Central junction box system fault	■ Refer to the electrical circuit diagrams and check the central junction box power and ground circuits for open circuit, high resistance ■ Using the manufacturer approved diagnostic system, perform a CAN network integrity test. Refer to the electrical circuit diagrams and check the high speed CAN bus circuit for short circuit to ground, short circuit to power, open circuit, high resistance ■ Using the manufacturer approved diagnostic system, check the central junction box for related DTCs and refer to the relevant DTC index
U0300-55	Internal Control Module Software Incompatibility - Not configured	■ Parking brake module configuration does not match vehicle configuration ■ Parking brake actuator module fault	■ Check that the correct module is installed to the vehicle. Check that the car configuration file (CCF) is being used. Configure the module(s) using the approved diagnostic system
U0401-00	Invalid Data Received From ECM/PCM A - No sub type information	■ Missing/invalid data from the engine control module	■ Using the manufacturer approved diagnostic system, check the engine control module for related DTCs and refer to the relevant DTC index
U0402-00	Invalid data received from	■ Missing/invalid data from the transmission control module	■ Using the manufacturer approved diagnostic system, check the transmission control

	the TCM - No sub type information		module for related DTCs and refer to the relevant DTC index
U0403-00	Invalid Data Received From The Transfer Case Control Module - No sub type information	■ Missing/invalid data from the transfer case control module	■ Using the manufacturer approved diagnostic system, check the transfer case control module for related DTCs and refer to the relevant DTC index
U0415-00	Invalid Data Received From Anti-Lock Brake System (ABS) Control Module - No sub type information	■ Missing/invalid data from the anti-lock brake system control module	■ Using the manufacturer approved diagnostic system, check the anti-lock brake system control module for related DTCs and refer to the relevant DTC index
U0422-00	Invalid Data Received From Body Control Module - No sub type information	■ Missing/invalid data from the central junction box	■ Using the manufacturer approved diagnostic system, check the central junction box for related DTCs and refer to the relevant DTC index
U1A14-49	CAN Initialization Failure - Internal electronic failure	■ CAN error ■ Parking brake actuator module fault	■ Clear DTCs, complete drive cycle 1 to test for normal operation, refer to the relevant drive cycle shown below this table. Refer to the warranty policy and procedures manual if a module is suspect
U2002-01	Switch - General electrical failure	**NOTE:** This DTC can be set by very slow operation of the electric park brake switch	■ With the ignition set to on, apply the electric park brake for a minimum of 10 seconds, then release. Clear the DTC and retest ■ Check for any contamination/debris that may be causing the electric park brake switch to be stuck ■ Disconnect the electric park brake switch and

			■ Electric park brake switch needs to reset ■ Electric park brake switch contaminated ■ Electric park brake switch connector damaged, corroded or backed out terminals ■ Electric park brake switch circuits short circuit to ground, short circuit to power, open circuit, high resistance ■ Electric park brake switch internal failure	check for connector damage, corroded or backed out terminals. Clear the DTC and retest ■ Refer to the electrical circuit diagrams and check the electric park brake switch circuits for short circuit to ground, short circuit to power, open circuit, high resistance ■ Check and install a new electric park brake switch as necessary. Clear DTCs and complete drive cycle 1 as described in section 206-05 Diagnosis and Testing and test for normal operation
U2002-12	Switch - Circuit short to battery	■ Electric park brake switch needs to reset ■ Electric park brake switch contaminated ■ Electric park brake switch connector damaged, corroded or backed out terminals ■ Electric park brake switch circuit short circuit to power ■ Electric park brake switch internal failure	■ With the ignition set to on, apply the electric park brake for a minimum of 10 seconds, then release. Clear the DTC and retest ■ Check for any contamination/debris that may be causing the electric park brake switch to be stuck ■ Disconnect the electric park brake switch and check for connector damage, corroded or backed out terminals. Clear the DTC and retest ■ Refer to the electrical circuit diagrams and check the electric park brake switch circuit for short circuit to power ■ Check and install a new electric park brake switch as necessary. Clear DTCs

			and complete drive cycle 1 as described in section 206-05 Diagnosis and Testing and test for normal operation
U2002-2F	Switch - Signal erratic	**NOTE:** This DTC can be set by very slow operation of the electric park brake switch ■ Electric park brake switch needs to reset ■ Electric park brake switch contaminated ■ Electric park brake switch connector damaged, corroded or backed out terminals ■ Electric park brake switch circuits short circuit to ground, short circuit to power, open circuit, high resistance ■ Electric park brake switch internal failure	■ With the ignition set to on, apply the electric park brake for a minimum of 10 seconds, then release. Clear the DTC and retest ■ Check for any contamination/debris that may be causing the electric park brake switch to be stuck ■ Disconnect the electric park brake switch and check for connector damage, corroded or backed out terminals. Clear the DTC and retest ■ Refer to the electrical circuit diagrams and check the electric park brake switch circuits for short circuit to ground, short circuit to power, open circuit, high resistance ■ Check and install a new electric park brake switch as necessary. Clear DTCs and complete drive cycle 1 as described in section 206-05 Diagnosis and Testing and test for normal operation
U2002-92	Switch - Performance or incorrect operation	**NOTE:** This DTC can be set by very slow	■ With the ignition set to on, apply the electric park brake for a minimum of 10 seconds, then release. Clear the DTC and retest

		operation of the electric park brake switch ■ Electric park brake switch needs to reset ■ Electric park brake switch contaminated ■ Electric park brake switch connector damaged, corroded or backed out terminals ■ Electric park brake switch circuits short circuit to ground, short circuit to power, open circuit, high resistance ■ Electric park brake switch internal failure	■ Check for any contamination/debris that may be causing the electric park brake switch to be stuck ■ Disconnect the electric park brake switch and check for connector damage, corroded or backed out terminals. Clear the DTC and retest ■ Refer to the electrical circuit diagrams and check the electric park brake switch circuits for short circuit to ground, short circuit to power, open circuit, high resistance ■ Check and install a new electric park brake switch as necessary. Clear DTCs and complete drive cycle 1 as described in section 206-05 Diagnosis and Testing and test for normal operation
U2012-00	Car Configuration Parameter(s) - No sub type information	■ Module incorrectly programmed	■ Check/amend the Car Configuration File using the manufacturer approved diagnostic system
U3000-00	Control Module - No sub type information	■ General electric failure	■ Check the control module connections for security and serviceability. Clear the DTC and retest
U3000-16	Control Module - Circuit voltage below threshold	■ Control module circuit voltage below threshold: ■ Voltage less than (master control module	■ Check the battery condition and state of charge. Refer to the relevant section of the workshop manual. Check the module power and ground circuits. Refer to

		voltage - 2V) for > 10 seconds ■ Battery voltage low ■ Control module circuit High resistance	the electrical circuit diagrams
U3000-17	Control Module - Circuit voltage above threshold	■ Control module circuit voltage above threshold ■ Battery voltage high (overcharging) ■ Control module circuit short circuit to power	■ Check the battery condition and state of charge. Refer to the relevant section of the workshop manual. Check the module power and ground circuits. Refer to the electrical circuit diagrams
U3000-4B	Control Module - Over temperature	■ Control module over temperature	■ Allow the unit to cool, clear the DTC and retest. Do not renew the modulator as this is a protection function to ensure no internal damage occurs
U300A-64	Ignition Switch - Signal plausibility failure	■ Signal plausibility failure	■ Check the ignition switch connections. Check the circuit between the ignition switch and the parking brake module. Refer to the electrical circuit diagrams. Clear the DTC and retest

GENERAL INFORMATION

DESCRIPTION AND OPERATION

PORTABLE AUDIO INTERFACE MODULE (APIM)

CAUTION:

Diagnosis by substitution from a donor vehicle is **NOT** acceptable. Substitution of control modules does not guarantee confirmation of a fault, and may also cause additional faults in the vehicle being tested and/or the donor vehicle

NOTES:

- If the control module or a component is suspect and the vehicle remains under manufacturer warranty, refer to the warranty policy and procedures manual, or determine if any prior approval programme is in operation, prior to the installation of a new module/component
- Generic scan tools may not read the codes listed, or may read only 5-digit codes. Match the 5 digits from the scan tool to the first 5 digits of the 7-digit code listed to identify the fault (the last 2 digits give extra information read by the manufacturer-approved diagnostic system)
- When performing voltage or resistance tests, always use a digital multimeter accurate to three decimal places and with a current calibration certificate. When testing resistance, always take the resistance of the digital multimeter leads into account
- Check and rectify basic faults before beginning diagnostic routines involving pinpoint tests
- Inspect connectors for signs of water ingress, and pins for damage and/or corrosion
- If diagnostic trouble codes are recorded and, after performing the pinpoint tests, a fault is not present, an intermittent concern may be the cause. Always check for loose connections and corroded terminals
- Where an 'on demand self-test' is referred to, this can be accessed via the 'diagnostic trouble code monitor' tab on the manufacturers approved diagnostic system
- Check DDW for open campaigns. Refer to the corresponding bulletins and SSMs which may be valid for the specific customer complaint and carry out the recommendations as required

The table below lists all Diagnostic Trouble Codes (DTCs) that could be logged in the Portable Audio Interface Module, for additional Diagnosis and Testing information refer to the relevant Diagnosis and Testing Section. For additional information, refer to: Information and Entertainment System (415-00 Information and Entertainment System - General Information, Diagnosis and Testing).

DTC	DESCRIPTION	POSSIBLE CAUSES	ACTION
U3000-13	Control Module - Circuit open	■ Universal serial bus (USB) harness between portable audio interface panel and user interface panel is not properly connected ■ Connection - detect circuit between portable audio interface panel and user interface panel is not grounded ■ Universal serial bus (USB) harness between portable audio interface panel and user	■ Check for correct connection of universal serial bus (USB) harness between portable audio interface panel and user interface panel. Refer to the electrical circuit diagrams and check portable audio interface module connection detect circuit between portable audio interface panel and user interface panel is grounded. Install universal serial bus (USB) harness between portable audio interface panel and user interface panel as required, refer to the new module /component installation note at the top of the DTC Index

		interface panel is open circuit	
U3000-44	Control Module - Data memory failure	■ Portable audio interface module internal RAM memory failure	■ Suspect the portable audio interface module. Check and install a new module as required. Refer to the warranty policy and procedures manual if a module is suspect
U3000-45	Control Module - Program memory failure	■ Portable audio interface module internal flash memory failure	■ Suspect the portable audio interface module. Check and install a new module as required. Refer to the warranty policy and procedures manual if a module is suspect
U3000-55	Control Module - Not configured	■ Portable audio interface module not configured correctly	■ Re-program the portable audio interface module, clear DTC and re-test. If DTC remains carry out MOST tests and test USB cable for open, short circuit, clear DTC and re-test. If DTC remains suspect the portable audio interface module, check and install a new module as required. Refer to the warranty policy and procedures manual if a module is suspect
U3003-62	Battery Voltage - Signal compare failure	■ Portable audio interface module voltage differs more than ±2V compared to central electronics module voltage	■ Refer to the electrical circuit diagrams and check the fuses, power and ground connections to both modules

2012.0 RANGE ROVER (LM), 100-00

GENERAL INFORMATION

DESCRIPTION AND OPERATION

REAR CLIMATE CONTROL MODULE (RHVAC)

CAUTION:

Diagnosis by substitution from a donor vehicle is **NOT** acceptable. Substitution of control modules does not guarantee confirmation of a fault, and may also cause additional faults in the vehicle being tested and/or the donor vehicle

NOTES:

- If the control module or a component is suspect and the vehicle remains under manufacturer warranty, refer to the warranty policy and procedures manual, or determine if any prior approval programme is in operation, prior to the installation of a new module/component
- Generic scan tools may not read the codes listed, or may read only 5-digit codes. Match the 5 digits from the scan tool to the first 5 digits of the 7-digit code listed to identify the fault (the last 2 digits give extra information read by the manufacturer-approved diagnostic system)
- When performing voltage or resistance tests, always use a digital multimeter accurate to three decimal places and with a current calibration certificate. When testing resistance, always take the resistance of the digital multimeter leads into account
- Check and rectify basic faults before beginning diagnostic routines involving pinpoint tests
- Inspect connectors for signs of water ingress, and pins for damage and/or corrosion
- If diagnostic trouble codes are recorded and, after performing the pinpoint tests, a fault is not present, an intermittent concern may be the cause. Always check for loose connections and corroded terminals
- Where an 'on demand self-test' is referred to, this can be accessed via the 'diagnostic trouble code monitor' tab on the manufacturers approved diagnostic system
- Check DDW for open campaigns. Refer to the corresponding bulletins and SSMs which may be valid for the specific customer complaint and carry out the recommendations as required

The table below lists all Diagnostic Trouble Codes (DTCs) that could be logged in the Climate Control Module, for additional Diagnosis and Testing information refer to the relevant Diagnosis and Testing Section. For additional information, refer to: Climate Control System (412-00 Climate Control System - General Information, Diagnosis and Testing).

DTC	DESCRIPTION	POSSIBLE CAUSES	ACTION
B1A59-11	Sensor 5 Volt Supply - Circuit short to ground	■ Face/feet air distribution motor 5 volt supply short circuit to ground	■ Refer to the electrical circuit diagrams and check the Face/feet air distribution motor 5 volt supply circuit
B1A67-13	Sensor Ground - Circuit open	■ Face/feet air distribution motor and evaporator sensor ground circuit open circuit	■ Refer to the electrical circuit diagrams and check Face/feet air distribution motor and evaporator sensor ground circuit
B1B7B-01	Left Rear Air Blend Actuator - General electrical failure	■ Left rear air blend actuator motor locked	■ Refer to the electrical circuit diagrams and check Left rear air blend actuator motor circuits for open, short circuit. Check the actuator linkage for obstructions or restrictions to movement. Check the motor connecter for security and serviceability. Renew the motor
B1B7B-11	Left Rear Air Blend Actuator - Circuit short to ground	■ Left rear air blend actuator motor circuit short to ground	■ Refer to the electrical circuit diagrams and check the motor position (AML) circuit between the rear air conditioning switch pack and the mode motor

B1B7B-15	Left Rear Air Blend Actuator - Circuit short to battery or open	■ Left rear air blend actuator motor circuit short to power or open circuit	■ Refer to the electrical circuit diagrams and check the motor position (AM) circuit between the rear air conditioning switch pack and the mode motor
B1B7C-01	Right Rear Air Blend Actuator - General electrical failure	■ Right rear air blend actuator motor locked	■ Refer to the electrical circuit diagrams and check Right rear air blend actuator motor circuits for open, short circuit. Check the actuator linkage for obstructions or restrictions to movement. Check the motor connecter for security and serviceability. Renew the motor
B1B7C-11	Right Rear Air Blend Actuator - Circuit short to ground	■ Right rear air blend actuator motor circuit short to ground	■ Refer to the electrical circuit diagrams and check the motor position (AMR) circuit between the rear air conditioning switch pack and the mode motor
B1B7C-15	Right Rear Air Blend Actuator - Circuit short to battery or open	■ Right rear air blend actuator motor circuit short to power or open circuit	■ Refer to the electrical circuit diagrams and check the motor position (AMR) circuit between the rear air conditioning switch pack and the mode motor
B1B7D-01	Rear Air Distribution Actuator - General electrical failure	■ Rear air distribution actuator motor locked	■ Refer to the electrical circuit diagrams and check rear air distribution actuator circuits for open, short circuit. Check the actuator linkage for obstructions or restrictions to movement. Check the motor connecter for security and serviceability. Renew the motor
B1B7D-11	Rear Air Distribution Actuator -	■ Rear air distribution actuator motor	■ Refer to the electrical circuit diagrams and check the face/feet air distribution motor position (AO) circuit between the rear air conditioning switch pack and the mode motor

	Circuit short to ground	circuit short to ground	
B1B7D-15	Rear Air Distribution Actuator - Circuit short to battery or open	■ Rear air distribution actuator motor circuit short to power or open circuit	■ Refer to the electrical circuit diagrams and check the face/feet air distribution motor position (AO) circuit between the rear air conditioning switch pack and the mode motor
B1B81-11	Rear Evaporator Temperature Sensor - Circuit short to ground	■ Rear evaporator temperature sensor circuit short to ground	■ Refer to the electrical circuit diagrams and check the sensor circuit. Renew the sensor
B1B81-15	Rear Evaporator Temperature Sensor - Circuit short to battery or open	■ Rear evaporator temperature sensor circuit short to power	■ Refer to the electrical circuit diagrams and check the sensor circuit. Renew the sensor
B1C0A-09	Rear Control panel - Component Failures	■ Component failure	■ Renew the rear Climate Control switch pack
B1C0A-88	Rear Control panel - Bus off	■ Communication BUS off	■ Refer to the Network Communications section of the workshop manual
B1C0A-96	Rear Control panel -		■ Renew the rear Climate Control switch pack

	Component internal failure	■ Internal component failure	
B1C0B-11	Rear Refrigerant Magnetic Valve - Circuit short to ground	■ Rear refrigerant magnetic valve circuit short to ground	■ Refer to the electrical circuit diagrams and check the magnetic valve circuit. Renew the valve
U0010-88	Medium Speed CAN Communication Bus - Bus off	■ Bus off	■ Refer to the electrical circuit diagrams and check the power and ground connections to the module. Using the manufacturer approved diagnostic system, complete a CAN network integrity test. Refer to the electrical circuit diagrams and check the CAN network
U0140-87	Lost Communication With Body Control Module - Missing message	■ Missing message	■ Refer to the electrical circuit diagrams and check the power and ground connections to the module. Using the manufacturer approved diagnostic system, complete a CAN network integrity test. Refer to the electrical circuit diagrams and check the CAN network between the Central Junction Box and Climate Control Module
U0164-87	Lost Communication With HVAC Control Module - Missing message	■ CAN Link instrument cluster/ATC module missing message	■ Refer to the electrical circuit diagrams and check the power and ground connections to the module. Using the manufacturer approved diagnostic system, complete a CAN network integrity test. Refer to the electrical circuit diagrams and check the CAN network between the Instrument Cluster and Climate Control Module
U0300-00	Internal Control Module Software	■ Incorrect MS CAN signal configuration	■ Refer to the electrical circuit diagrams and check the CAN circuits. Configure the module using the approved diagnostic system

	Incompatibility - No sub type information	(expulsion mode) ■ CAN bus configuration failure ■ CAN bus short circuit to ground	
U0300-55	Internal Control Module Software Incompatibility - Not configured	■ Not configured	■ Configure the module using the approved diagnostic system
U0300-87	Internal Control Module Software Incompatibility - Missing message	■ Missing message	■ Configure the module using the approved diagnostic system
U0401-86	Invalid Data Received from ECM/PCM A - Signal invalid	■ Invalid data received via the CAN Bus ■ High speed CAN bus circuit fault ■ Medium speed CAN bus circuit fault	**NOTE:** The engine control module is on HS-CAN, the rear automatic temperature control module is on MS-CAN, the instrument cluster is the gateway module and transfers the data from HS-CAN to MS-CAN ■ Check the engine control module and instrument cluster for related stored DTCs. Using the manufacturer approved diagnostic system, complete a CAN network integrity test. Refer to the electrical circuit diagrams and check the

		■ Component internal failure	high speed CAN network between the engine control module and the instrument cluster, check the medium speed CAN network between the instrument cluster and the rear automatic temperature control module for circuit fault
U0422-86	Invalid Data Received From Body Control Module - Signal invalid	■ Invalid data received via the medium speed CAN bus ■ Medium speed CAN bus circuit fault ■ Component internal failure	■ Check the central junction box for related stored DTCs. Using the manufacturer approved diagnostic system, complete a CAN network integrity test. Refer to the electrical circuit diagrams and check the medium speed CAN network between the central junction box and rear automatic temperature control module for circuit fault
U0424-86	Invalid Data Received From HVAC Control Module - Signal invalid	■ Invalid data received via the medium speed CAN bus ■ Medium speed CAN bus circuit fault ■ Component internal failure	■ Check the climate control module for related stored DTCs. Using the manufacturer approved diagnostic system, complete a CAN network integrity test. Refer to the electrical circuit diagrams and check the medium speed CAN network between the climate control module and rear automatic temperature control module for circuit fault
U1A14-49	CAN Initialization Failure - Internal electronic failure	■ Internal electronic failure	■ Refer to the electrical circuit diagrams and check the power and ground connections to the module. Using the manufacturer approved diagnostic system, complete a CAN network integrity test. Refer to the electrical circuit diagrams and check the CAN network

U3002-81	Vehicle Identification Number - Invalid serial data received	■ Invalid serial data received ■ Module installed from another vehicle ■ Module incorrectly configured	■ Configure the module using the approved diagnostic system

2012.0 RANGE ROVER (LM), 100-00

GENERAL INFORMATION

DESCRIPTION AND OPERATION

REAR DIFFERENTIAL CONTROL MODULE (RDCM)

CAUTION:

Diagnosis by substitution from a donor vehicle is **NOT** acceptable. Substitution of control modules does not guarantee confirmation of a fault, and may also cause additional faults in the vehicle being tested and/or the donor vehicle

NOTES:

- If the control module or a component is suspect and the vehicle remains under manufacturer warranty, refer to the warranty policy and procedures manual, or determine if any prior approval programme is in operation, prior to the installation of a new module/component
- Generic scan tools may not read the codes listed, or may read only 5-digit codes. Match the 5 digits from the scan tool to the first 5 digits of the 7-digit code listed to identify the fault (the last 2 digits give extra information read by the manufacturer-approved diagnostic system)
- When performing voltage or resistance tests, always use a digital multimeter accurate to three decimal places and with a current calibration certificate. When testing resistance, always take the resistance of the digital multimeter leads into account
- Check and rectify basic faults before beginning diagnostic routines involving pinpoint tests
- Inspect connectors for signs of water ingress, and pins for damage and/or corrosion
- If diagnostic trouble codes are recorded and, after performing the pinpoint tests, a fault is not present, an intermittent concern may be the cause. Always check for loose connections and corroded terminals
- Where an 'on demand self-test' is referred to, this can be accessed via the 'diagnostic trouble code monitor' tab on the manufacturers approved diagnostic system
- Check DDW for open campaigns. Refer to the corresponding bulletins and SSMs which may be valid for the specific customer complaint and carry out the recommendations as required

The table below lists all Diagnostic Trouble Codes (DTCs) that could be logged in the rear differential control module, for additional Diagnosis and Testing information refer to the relevant Diagnosis and Testing Section. For additional information, refer to: Rear Drive Axle and Differential (205-02 Rear Drive Axle/Differential, Diagnosis and Testing).

DTC	DESCRIPTION	POSSIBLE CAUSES	ACTION
P0562-00	System Voltage Low - No sub type information	■ Rear differential control module voltage supply below 9V ■ Rear differential control module internal fault	■ Clear DTCs and retest ■ If the DTC returns ■ Using the manufacturers approved diagnostic system carry out the guided diagnostic routine
P0563-00	System Voltage High - No sub type information	■ System voltage high (supply voltage supply greater than 16 volts)	■ Check engine control module (ECM) for stored DTCs, Suspect charging system fault. Refer to the electrical circuit diagrams and check, power and ground circuit for fault
P0604-00	Internal Control Module Random Access Memory (RAM) Error - No sub type information	■ Rear differential control module internal fault	■ Clear the DTC and retest. If the problem persists. Using the manufacturer approved diagnostic system check and install latest relevant level of software to the rear differential control module. Clear the DTC and retest. If the problem persists. Renew the rear differential control module. Refer to the warranty policy and procedures manual, or determine if any prior approval programme is in operation, prior to the installation of a new module/component
P0605-00	Internal Control Module		■ Clear the DTC and retest. If the problem persists. Using the manufacturer approved diagnostic system check and install latest relevant level of

	Read Only Memory (ROM) Error - No sub type information	■ Rear differential control module internal error	software to the rear differential control module. Clear the DTC and retest. If the problem persists. Renew the control module. Refer to the warranty policy and procedures manual, or determine if any prior approval programme is in operation, prior to the installation of a new module /component
P0606-00	Control Module Processor - No sub type information	■ Watch dog reset - Internal control module failure	■ Clear the DTC and retest. If the problem persists, renew the rear differential control module. This is a control module internal check DTC and is not necessarily a fault. If no other DTCs are logged and no customer complaint exists, clear this DTC and retest. Check the security of control module fixings. Check the module ground connection. Consider environmental conditions before condemning the rear differential control module. If the problem persists. Using the manufacturer approved diagnostic system check and install latest relevant level of software to the rear differential control module. Clear the DTC and retest. If the problem persists. Renew the rear differential control module. Refer to the warranty policy and procedures manual, or determine if any prior approval programme is in operation, prior to the installation of a new module /component
P0607-00	Control Module Performance - No sub type information	■ Rear differential control module internal fault	■ Check engine control module (ECM) for stored DTCs, Suspect charging system fault. Refer to the electrical circuit diagrams and check, power and ground circuit for fault ■ Clear DTCs and retest ■ If the DTC returns ■ If the concern is still evident suspect an internal module fault ■ Replace as required. Refer to the warranty policy and procedures manual, or determine if any prior approval programme is in operation, prior to the installation of a new module/component
P0652-00	Sensor Reference	■ Position sensor supply below 5.7V	

	Voltage 'B' Circuit Low - No sub type information	■ Sensor failure (within rear differential actuator)	■ Refer to the electrical circuit diagrams and check the rear differential actuator sensor position circuit, repair as necessary. If no circuit problems exist, renew the rear differential actuator as required
P0653-00	Sensor Reference Voltage 'B' Circuit High - No sub type information	■ Position sensor supply above 8.3 V ■ Internal control module failure	■ Refer to the electrical circuit diagrams and check the rear differential actuator hall sensor ref voltage at the control module or the rear differential actuator. If voltage at the module is too high, then suspect control module fault. If voltage at the actuator is too high check for short circuit fault. If no other DTCs are logged and no customer complaint exists, clear this DTC and retest. Check the security of control module fixings. Check the module ground connection. Consider environmental conditions before condemning the control module. If the problem persists, renew the control module. Refer to the warranty policy and procedures manual, or determine if any prior approval programme is in operation, prior to the installation of a new module/component
P0666-00	Control Module Internal Temperature Sensor "A" Circuit - No sub type information	■ Rear differential control module internal temperature sensor value above 105°C	■ If no other DTCs are logged and no customer complaint exists, clear this DTC and retest. Check the security of control module fixings. Check the module ground connection. Consider environmental conditions before condemning the control module. If the problem persists, renew the control module. Refer to the warranty policy and procedures manual, or determine if any prior approval programme is in operation, prior to the installation of a new module/component
P0702-64	Transmission Control System Electrical - Signal plausibility failure	■ Implausibility of differential motor temperature sensor and oil temperature sensor readout detected	■ Check the rear differential oil quantity and specification. Refer to the relevant section of the workshop manual. Check both temperature sensor circuits and connectors for damage/water ingress, repair as necessary. Where available, after vehicle has been switched off for at least an hour, use the manufacturer approved diagnostic system to read motor temperature and oil temperature sensor values. Temperature difference should be less than 25°C. Clear the DTC and retest

		■ Motor or oil temperature sensor circuit short circuit to ground or power	
P0712-00	Transmission Fluid Temperature Sensor 'A' Circuit Low - No sub type information	■ Rear differential actuator internal temperature sensor open circuit or short circuit to ground	■ Refer to the electrical circuit diagrams and check the rear differential actuator sensor circuit, repair as necessary. If no circuit problems exist, renew the rear differential actuator. as required
P0713-00	Transmission Fluid Temperature Sensor 'A' Circuit High - No sub type information	■ Rear differential actuator internal temperature sensor open circuit or short circuit to power ■ Supply circuit fault ■ Signal circuit fault	■ Clear DTCs and retest ■ If the DTC returns ■ Using the manufacturers approved diagnostic system carry out the guided diagnostic routine
P0806-00	Clutch Position Sensor Circuit Range /Performance - No sub type information	■ Mismatch of actual and expected /calculated actuator position ■ Signal circuit fault ■ Sensor internal fault	△ **NOTE:** The position sensor is internal to the rear differential actuator motor ■ Record then clear any stored DTCs

		■ Rear differential control module internal fault	■ Carry out the on-demand self test via the 'Monitor DTC' tab on the manufacturers approve diagnostic system ■ Clear DTCs, ignition state to off for 5 seconds then retest ■ If the DTC returns ■ Using the manufacturers approved diagnostic system carry out the guided diagnostic routine ■ Clear DTCs, ignition state to off for 5 seconds then retest ■ If the DTC returns suspect rear differential actuator motor internal fault ■ Replace as required. Refer to the warranty policy and procedures manual, or determine if any prior approval programme is in operation, prior to the installation of a new module/component
P0807-00	Clutch Position Sensor Circuit Low - No sub type information	■ Rear differential actuator internal position sensor supply open circuit or short circuit to ground, signal A or B open circuit signal A or B short circuit to ground	■ Refer to the electrical circuit diagrams and check the rear differential actuator motor position hall sensor signal circuit (A or B), repair as necessary. If no circuit problems exist, renew the rear differential actuator as required
P0808-00	Clutch Position Sensor Circuit High - No sub type information	■ Rear differential actuator internal position sensor signal 1 or 2 short circuit to power	■ Refer to the electrical circuit diagrams and check the rear differential actuator motor position hall sensor signal circuit (A or B), repair as necessary. If no circuit problems exist, renew the rear differential actuator as required

P080A-00	Clutch Position Not Learned - No sub type information	■ Rear differential control module not calibrated ■ Rear differential control module internal fault	**NOTE:** The rear differential control module system runs a self calibration routine every 500Km, if any other rear differential control module fault is present this routine will not run and log P080A. If other rear differential control module related faults are also logged these should be investigated first. P080A will also log if the rear differential control module has been removed and reconnected ■ Carry out the on-demand self test via the 'Monitor DTC' tab on the manufacturers approve diagnostic system ■ Clear DTCs, ignition state to off for 5 seconds then retest
P0894-00	Transmission Component Slipping - No sub type information	■ Rear differential actuator internal magnetic brake is slipping	■ Check control module supply ■ If module supply is ok, refer to circuit diagram, check motor brake connections for damage or short circuit faults ■ If no external fault is present renew the rear differential actuator as required
P0900-00	Clutch Actuator Circuit/Open - No sub type information	■ Rear differential actuator supply open circuit	■ Refer to the electrical circuit diagrams. Check Actuator motor circuit for open circuit, Using a multimeter, check vehicle/actuator harness and relevant connectors for open circuits, repair as necessary
P0901-00	Clutch Actuator Circuit Range /Performance - No sub type information	■ Motor supply circuit fault ■ Rear differential control module internal fault	■ Clear DTCs, ignition state to off for 5 seconds then retest ■ If the DTC returns ■ Using the manufacturers approved diagnostic system carry out the guided diagnostic routine ■ Clear DTCs, ignition state to off for 5 seconds then retest

P0902-00	Clutch Actuator Circuit Low - No sub type information	■ Rear differential actuator supply circuit short to ground.	■ Refer to the electrical circuit diagrams. Check Actuator motor circuit for short to ground. Using a multimeter, check vehicle/actuator harness and relevant connectors for short circuit to ground, repair as necessary
P0903-00	Clutch Actuator Circuit High - No sub type information	■ Rear differential actuator supply circuit short to power	■ Refer to the electrical circuit diagrams. Check Actuator motor circuit for short to power. Using a multimeter, check vehicle/actuator harness and relevant connectors for short circuit to power, repair as necessary
P1603-00	EEPROM Malfunction - No sub type information	■ Rear differential control module internal error	■ Clear the DTC and re-test. If the DTC returns. Check and install a new rear differential control module as required. Refer to the warranty policy and procedures manual, or determine if any prior approval programme is in operation, prior to the installation of a new module/component
P1783-00	Transmission Over-Temperature Condition - No sub type information	■ Rear differential oil sump temperature sensor value above 160°C	■ Confirm the customer complaint and vehicle usage at the time of DTC event. Check the operation of the rear differential. Check the rear differential oil quantity and specification. Refer to the relevant section of the workshop manual. Clear the DTC and retest. If the problem persists, suspect an electrical fault. Check for water ingress into wiring harness /connectors. If no circuit problems exist, renew the rear differential oil temperature sensor as required
P186A-00	Differential Lock-Up Actuator Brake Control Circuit /Open - No sub type information	■ Open circuit of rear differential actuator internal magnetic brake supply leads	■ Refer to the electrical circuit diagrams and check the rear differential actuator circuit, repair as necessary. If no circuit problems exist, renew the rear differential actuator as required

P186B-00	Differential Lock-Up Actuator Brake Control Circuit Low - No sub type information	■ Short circuit to ground of both rear differential actuator internal magnetic brake pins	■ Refer to the electrical circuit diagrams and check the rear differential actuator circuit, repair as necessary. If no circuit problems exist, renew the rear differential actuator as required
P186C-00	Differential Lock-Up Actuator Brake Control Circuit High - No sub type information	■ Short circuit to power of both rear differential actuator internal magnetic brake pins	■ Refer to the electrical circuit diagrams and check the rear differential actuator circuit, repair as necessary. If no circuit problems exist, renew the rear differential actuator as required
P186D-00	Clutch Actuator Stuck - No sub type information	■ Rear differential actuator brake fault ■ Actuating mechanism mechanical failure ■ Motor internal fault	△ **NOTE:** If any rear differential actuator brake or motor position sensor faults are also logged these should be investigated first ■ Clear DTCs and retest ■ Using the manufacturers approved diagnostic system carry out the guided diagnostic routine ■ If no fault is found with the motor internal resistance, suspect motor brake failure ■ Replace as required. Refer to the warranty policy and procedures manual, or determine if any prior approval programme is in operation, prior to the installation of a new module/component ■ Clear DTCs and retest

P2742-00	Transmission Fluid Temperature Sensor 'B' Circuit Low - No sub type information	■ Rear differential oil sump temperature sensor short circuit to ground	■ Refer to the electrical circuit diagrams and check the differential oil temperature sensor circuit, repair as necessary
P2743-00	Transmission Fluid Temperature Sensor 'B' Circuit High - No sub type information	■ Supply circuit fault ■ Signal circuit fault ■ Rear differential control module internal fault	■ Refer to the electrical circuit diagrams and check the differential oil temperature sensor circuit, repair as necessary ■ Or ■ Using the manufacturers approved diagnostic system carry out the guided diagnostic routine ■ Clear DTCs and retest ■ If the DTC returns ■ Suspect a differential oil temperature sensor internal fault
P2785-00	Clutch Actuator Temperature Too High - No sub type information	**NOTE:** Rear differential actuator internal temperature Sensor value above 150ºC ■ Extensive prolonged rear wheel speed differential	■ Check for related DTCs. If multiple DTCs exist, suspect a control module internal fault. Confirm the customer complaint and vehicle usage at the time of DTC event. Check the operation of the rear differential. Check the rear differential oil quantity and specification. Refer to the relevant section of the workshop manual. Clear the DTC and retest. If the problem persists, renew the rear differential actuator as required

		■ Supply circuit fault ■ Signal circuit fault ■ Insufficient oil quantity ■ Incorrect oil specification ■ Rear differential internal fault ■ Rear differential control module internal fault	
P2787-00	Clutch Temperature Too High - No sub type information	■ Extensive prolonged rear wheel speed differential ■ Oil temperature sensor circuit fault ■ Motor temperature sensor circuit fault ■ Insufficient oil quantity ■ Incorrect oil specification ■ Rear differential internal fault	**NOTE:** Rear differential actuator internal temperature Sensor (calculated from motor and oil temperature) value above 200ºC ■ Confirm the customer concern and vehicle usage at the time of DTC event ■ Check for related DTCs ■ Investigate these first ■ Clear DTCs and retest ■ If the DTCs return ■ Suspect a control module internal fault. Check the operation of the rear differential. Check the rear differential oil quantity and specification. Refer to the relevant section of the workshop manual. Clear the DTC and retest. If the problem persists, renew the rear differential actuator as required

		■ Rear differential control module internal fault	
U0001-88	High Speed CAN Communication Bus - Bus off	■ High speed CAN communication bus short to ground, short to power, open circuit	■ Using the manufacturer approved diagnostic system, complete a CAN network integrity test. Refer to the electrical circuit diagrams and check the CAN network for short to ground, short to power, open circuit
U0100-00	Lost Communication With ECM/PCM "A" - No sub type information	■ Lost communication with engine control module (ECM)	■ Refer to the electrical circuit diagrams and check the power and ground circuits to the engine control module (ECM). Using the manufacturer approved diagnostic system, complete a CAN network integrity test. Refer to the electrical circuit diagrams and check the CAN network between the all engine control module (ECM) and rear differential control module
U0102-00	Lost Communication With Transfer Case Control Module - No sub type information	■ No sub type information	■ Refer to the electrical circuit diagrams and check the power and ground connections to the module. Using the manufacturer approved diagnostic system, complete a CAN network integrity test. Refer to the electrical circuit diagrams and check the CAN network between the transfer case control module and rear differential control module
U0121-00	Lost Communication With Anti-Lock Brake System (ABS) Control Module - No sub type information	■ Lost communication with anti-lock brake system (ABS) module	■ Refer to the electrical circuit diagrams and check the power and ground circuits to the anti-lock brake system (ABS) module. Using the manufacturer approved diagnostic system, complete a CAN network integrity test. Refer to the electrical circuit diagrams and check the CAN network between the anti-lock brake system (ABS) and rear differential control module

U0139-00	Lost Communication With Suspension Control Module "B" - no sub type information	■ Lost communication with Suspension Control Module "B"	■ Refer to the electrical circuit diagrams and check the power and ground circuits to the air suspension control module. Using the manufacturer approved diagnostic system, complete a CAN network integrity test. Refer to the electrical circuit diagrams and check the CAN network between the air suspension control module and rear differential control module
U0140-00	Lost Communication With Body Control Module - No sub type information	■ Lost communication with central junction box (CJB)	■ Refer to the electrical circuit diagrams and check the power and ground circuits to the central junction box (CJB). Using the manufacturer approved diagnostic system, complete a CAN network integrity test. Refer to the electrical circuit diagrams and check the CAN network between the central junction box (CJB) and rear differential control module.
U0300-00	Internal Control Module Software Incompatibility - No sub type information	■ Rear differential control module not configured ■ Incorrect software installed	■ Check & confirm rear differential control module installed is correct. If correct, clear DTC, ignition off for 5 seconds, ignition on and then check if DTC reoccurs. Using the manufacturer approved diagnostic system check and install latest relevant level of software to the rear differential control module
U0403-68	Invalid Data Received From Transfer Case Control Module - Event information	■ Event information	■ Check the transfer case control module for related DTCs and refer to the relevant DTC index
U0415-68	Lost Communication With Anti-Lock Brake System	■ Event information	■ Refer to the electrical circuit diagrams and check the power and ground connections to the module. Using the manufacturer approved diagnostic system, complete a CAN network integrity test. Refer to the electrical circuit diagrams and check the CAN network between the anti-lock brake system (ABS) and rear differential control module

	(ABS) Control Module - Event information		
U0422-68	Invalid Data Received from Body Control Module - Event information	■ Event information-invalid data received	■ Check the central junction box (CJB) for related DTCs and refer to the relevant DTC index
U043A-68	Invalid Data Received From Suspension Control Module "B" - event information	■ Event information-invalid data received	■ Check the air suspension control module for related DTCs and refer to the relevant DTC index
U1A14-49	CAN Initialization Failure - Internal electronic failure	■ Rear differential control module has failed the CAN serial data communication software initialization or the CAN controller initialization ■ Rear differential control module internal failure	■ Using the manufacturer approved diagnostic system check and install latest relevant level of software to the rear differential control module. Clear the DTC and re-test. Check and install a new rear differential control module as required. Refer to the warranty policy and procedures manual, or determine if any prior approval programme is in operation, prior to the installation of a new module/component

2012.0 RANGE ROVER (LM), 100-00

GENERAL INFORMATION

DESCRIPTION AND OPERATION

REAR ENTERTAINMENT CONTROL MODULE (REM)

CAUTION:

Diagnosis by substitution from a donor vehicle is **NOT** acceptable. Substitution of control modules does not guarantee confirmation of a fault, and may also cause additional faults in the vehicle being tested and/or the donor vehicle

NOTES:

- If the control module or a component is suspect and the vehicle remains under manufacturer warranty, refer to the warranty policy and procedures manual, or determine if any prior approval programme is in operation, prior to the installation of a new module/component
- Generic scan tools may not read the codes listed, or may read only 5-digit codes. Match the 5 digits from the scan tool to the first 5 digits of the 7-digit code listed to identify the fault (the last 2 digits give extra information read by the manufacturer-approved diagnostic system)
- When performing voltage or resistance tests, always use a digital multimeter accurate to three decimal places and with a current calibration certificate. When testing resistance, always take the resistance of the digital multimeter leads into account
- Check and rectify basic faults before beginning diagnostic routines involving pinpoint tests
- Inspect connectors for signs of water ingress, and pins for damage and/or corrosion
- If diagnostic trouble codes are recorded and, after performing the pinpoint tests, a fault is not present, an intermittent concern may be the cause. Always check for loose connections and corroded terminals
- Where an 'on demand self-test' is referred to, this can be accessed via the 'diagnostic trouble code monitor' tab on the manufacturers approved diagnostic system
- Check DDW for open campaigns. Refer to the corresponding bulletins and SSMs which may be valid for the specific customer complaint and carry out the recommendations as required

The table below lists all Diagnostic Trouble Codes (DTCs) that could be logged in the Rear Entertainment Control Module, for additional Diagnosis and Testing information refer to the relevant Diagnosis and Testing Section. For additional information, refer to: Information and Entertainment System (415-00 Information and Entertainment System - General Information, Diagnosis and Testing).

DTC	DESCRIPTION	POSSIBLE CAUSES	ACTION
B1D50-79	Digital Disk Player - Mechanical linkage failure	▪ Digital versatile disc (DVD) changer mechanical fault ▪ Error report from AiNet	▪ Check for a mechanical fault (jammed magazine, etc). Rectify as necessary
B1D50-93	Digital Disk Player - No operation	▪ Digital versatile disc (DVD) changer is not responding ▪ Communication error between the main and DVD microprocessors ▪ No response from AiNet	▪ Refer to the electrical circuit diagrams and check the AiNet circuits. Rectify as necessary
B1D50-98	Digital Disk Player - Component or system over temperature	▪ A high temperature condition has been detected	▪ Check the installation of the DVD module. Make sure there is sufficient airflow. Clear the DTC and retest. Consider the atmospheric conditions before condemning a module
B1D81-93	Rear Left Display Module - No operation	▪ Left-hand rear display is not responding ▪ Communication error between the main and	▪ Check the IS bus circuits. Refer to the electrical circuit diagrams

		left-hand display microprocessors ■ No response from the IS bus	
B1D81-98	Rear Left Display Module - Component or system over temperature	■ A high temperature condition has been detected	■ Clear the DTC and retest. Consider the atmospheric conditions before condemning a module
B1D82-93	Rear Right Display Module - No operation	■ Right-hand rear display is not responding ■ Communication error between the main and right-hand display microprocessors ■ No response from the IS bus	■ Check the IS bus circuits. Refer to the electrical circuit diagrams
B1D82-98	Rear Right Display Module - Component or system over temperature	■ A high temperature condition has been detected	■ Clear the DTC and retest. Consider the atmospheric conditions before condemning a module
U1A03-55	Car Config Parameter - Not configured	■ Rear entertainment module (REM) not configured	■ Where available, configure the module using the approved diagnostic system
U1A17-31	Incomplete MOST Ring Reported By REM - No signal	■ No signal from the rear entertainment module (REM)	■ Carry out the general media orientated system transport (MOST) test. Refer to the Network Communications section of the workshop manual and in the approved diagnostic system, where available

		■ Fibre optic ring break condition reported	

2012.0 RANGE ROVER (LM), 100-00

GENERAL INFORMATION

DESCRIPTION AND OPERATION

REMOTE DRIVER UTILITY MODULE - VENTURE CAM (RDUM)

CAUTION:

Diagnosis by substitution from a donor vehicle is **NOT** acceptable. Substitution of control modules does not guarantee confirmation of a fault, and may also cause additional faults in the vehicle being tested and/or the donor vehicle

NOTES:

- If the control module or a component is suspect and the vehicle remains under manufacturer warranty, refer to the warranty policy and procedures manual, or determine if any prior approval programme is in operation, prior to the installation of a new module/component
- Generic scan tools may not read the codes listed, or may read only 5-digit codes. Match the 5 digits from the scan tool to the first 5 digits of the 7-digit code listed to identify the fault (the last 2 digits give extra information read by the manufacturer-approved diagnostic system)
- When performing voltage or resistance tests, always use a digital multimeter accurate to three decimal places and with a current calibration certificate. When testing resistance, always take the resistance of the digital multimeter leads into account
- Check and rectify basic faults before beginning diagnostic routines involving pinpoint tests
- Inspect connectors for signs of water ingress, and pins for damage and/or corrosion
- If diagnostic trouble codes are recorded and, after performing the pinpoint tests, a fault is not present, an intermittent concern may be the cause. Always check for loose connections and corroded terminals
- Where an 'on demand self-test' is referred to, this can be accessed via the 'diagnostic trouble code monitor' tab on the manufacturers approved diagnostic system
- Check DDW for open campaigns. Refer to the corresponding bulletins and SSMs which may be valid for the specific customer complaint and carry out the recommendations as required

The table below lists all Diagnostic Trouble Codes (DTCs) that could be logged in the Remote Driver Utility Module - Venture Cam, for additional Diagnosis and Testing information refer to the relevant Diagnosis and Testing Section. For additional information, refer to: Information and Entertainment System (415-00 Information and Entertainment System - General Information, Diagnosis and Testing).

DTC	DESCRIPTION	POSSIBLE CAUSES	ACTION
U0010-88	Medium Speed CAN Communication Bus - Bus off	■ Loss of companion control from the integrated head unit, no communication with diagnostic tester	■ Refer to the electrical circuit diagrams and check the power and ground connections to the module. Using the manufacturer approved diagnostic system, complete a CAN network integrity test. Refer to the electrical circuit diagrams and check the CAN network
U0184-00	Lost Communication With Radio - No sub type information	■ Loss of companion control from the integrated head unit, no communication with diagnostic tester	■ Refer to the electrical circuit diagrams and check the power and ground connections to the module. Using the manufacturer approved diagnostic system, complete a CAN network integrity test. Refer to the electrical circuit diagrams and check the CAN network
U0300-00	Internal Control Module Software Incompatibility - No sub type information	■ Remote driver utility module incorrectly configured	■ Configure the module using the approved diagnostic system
U3000-44	Control Module - Data memory failure	■ Remote driver utility module internal RAM memory failure	■ Renew the module. Refer warranty policies and procedures before renewing a module
U3000-45	Control Module - Program memory failure		■ Renew the module. Refer warranty policies and procedures before renewing a module

		■ Remote driver utility module calibration /parameter memory failure	
U3000-46	Control Module - Calibration /parameter memory failure	■ Remote driver utility module internal flash memory failure	■ Clear the DTC and retest. If the problem persists, renew the module. Refer warranty policies and procedures before renewing a module
U3000-47	Control Module - Watchdog/safety microcontroller failure	■ Remote driver utility module internal watchdog/safety MicroController failure	■ Clear the DTC and retest. If the problem persists, renew the module. Refer warranty policies and procedures before renewing a module
U3000-49	Control Module - Internal electronic failure	■ Remote driver utility module internal electronic failure	■ Clear the DTC and retest. If the problem persists, renew the module. Refer warranty policies and procedures before renewing a module
U3000-56	Control Module - Invalid /incomplete configuration	■ Remote driver utility module invalid /incomplete configuration	■ Configure the module using the approved diagnostic system
U3003-62	Battery Voltage - Signal compare failure	■ Remote driver utility module voltage differs more than ±2V compared to Central Junction Box voltage	■ Refer to the electrical circuit diagrams and check the power and ground connections to both modules

2012.0 RANGE ROVER (LM), 100-00

GENERAL INFORMATION

DESCRIPTION AND OPERATION

REMOTE FUNCTION ACTUATOR (RFA)

CAUTION:

Diagnosis by substitution from a donor vehicle is **NOT** acceptable. Substitution of control modules does not guarantee confirmation of a fault, and may also cause additional faults in the vehicle being tested and/or the donor vehicle

NOTES:

- If the control module or a component is suspect and the vehicle remains under manufacturer warranty, refer to the warranty policy and procedures manual, or determine if any prior approval programme is in operation, prior to the installation of a new module/component
- Generic scan tools may not read the codes listed, or may read only 5-digit codes. Match the 5 digits from the scan tool to the first 5 digits of the 7-digit code listed to identify the fault (the last 2 digits give extra information read by the manufacturer-approved diagnostic system)
- When performing voltage or resistance tests, always use a digital multimeter accurate to three decimal places and with a current calibration certificate. When testing resistance, always take the resistance of the digital multimeter leads into account
- Check and rectify basic faults before beginning diagnostic routines involving pinpoint tests
- Inspect connectors for signs of water ingress, and pins for damage and/or corrosion
- If diagnostic trouble codes are recorded and, after performing the pinpoint tests, a fault is not present, an intermittent concern may be the cause. Always check for loose connections and corroded terminals
- Where an 'on demand self-test' is referred to, this can be accessed via the 'diagnostic trouble code monitor' tab on the manufacturers approved diagnostic system
- Check DDW for open campaigns. Refer to the corresponding bulletins and SSMs which may be valid for the specific customer complaint and carry out the recommendations as required

The table below lists all Diagnostic Trouble Codes (DTCs) that could be logged in the Remote Function Actuator Module, for additional Diagnosis and Testing information refer to the relevant Diagnosis and Testing Section. For additional information, refer to: Locks, Latches and Entry Systems (501-14 Handles, Locks, Latches and Entry Systems, Diagnosis and Testing).

DTC	DESCRIPTION	POSSIBLE CAUSES	ACTION
B102B-00	Passive Key - No sub type information	■ Passive key response error ■ Incorrect key ■ Key incorrectly programmed	■ Re-Program the key using the manufacturers approved diagnostic system
B10A9-00	Remote Keyless Entry Less Than 2 Keys Programmed - No sub type information	■ Secret key has been programmed to the vehicle but less than 2 key fobs have been programmed	■ Re-Program the key fobs using the manufacturers approved diagnostic system
B10C7-00	Interior Trunk Antenna - No sub type information	■ Antenna failure	■ Refer to the electrical circuit diagrams and check headliner LHS antenna circuit for short to ground, short to power. Clear the diagnostic trouble code and retest. If the problem persists, check and install new headliner LHS antenna as required. Refer to the warranty policy and procedures manual if a module/component is suspect
B10C7-	Interior Trunk		

11	Antenna - Circuit short to ground	■ One or both antenna wires shorted to ground or shorted to each other	■ Refer to the electrical circuit diagrams and check headliner LHS antenna circuit for short to ground, short to each other. Clear the diagnostic trouble code and retest
B10C7-12	Interior Trunk Antenna - Circuit short to battery	■ One or both antenna wires shorted to battery	■ Refer to the electrical circuit diagrams and check headliner LHS antenna circuit for short to power. Clear the diagnostic trouble code and retest
B10C7-13	Interior Trunk Antenna - Circuit open	■ One or both antenna wires open	■ Refer to the electrical circuit diagrams and check headliner LHS antenna circuit for open circuit. Clear the diagnostic trouble code and retest
B10C7-1C	Interior Trunk Antenna - Circuit voltage out of range	■ Fault with voltage supply to all antenna drivers	■ Check and install new keyless vehicle module as required. Refer to the warranty policy and procedures manual if a module/component is suspect
B10C8-00	Interior Center Antenna - No sub type information	■ Antenna failure	■ Refer to the electrical circuit diagrams and check headliner RHS antenna circuit for short to ground, short to power. Clear the diagnostic trouble code and retest. If the problem persists, check and install new headliner RHS antenna as required. Refer to the warranty policy and procedures manual if a module/component is suspect
B10C8-11	Interior Center Antenna - Circuit short to ground	■ One or both antenna wires shorted to ground or	■ Refer to the electrical circuit diagrams and check headliner RHS antenna circuit for short to ground, short to each other. Clear the diagnostic trouble code and retest

		shorted to each other	
B10C8-12	Interior Center Antenna - Circuit short to battery	■ One or both antenna wires shorted to battery	■ Refer to the electrical circuit diagrams and check headliner RHS antenna circuit for short to power. Clear the diagnostic trouble code and retest
B10C8-13	Interior Center Antenna - Circuit open	■ One or both antenna wires open	■ Refer to the electrical circuit diagrams and check headliner RHS antenna circuit for open circuit. Clear the diagnostic trouble code and retest
B10C8-1C	Interior Center Antenna - Circuit voltage out of range	■ Fault with voltage supply to all antenna drivers	■ Check and install new keyless vehicle module as required. Refer to the warranty policy and procedures manual if a module/component is suspect
B10C9-00	Interior Front Antenna - No sub type information	■ Antenna failure	■ Refer to the electrical circuit diagrams and check interior front cabin antenna circuit for short to ground, short to power. Clear the diagnostic trouble code and retest. If the problem persists, check and install new interior front cabin antenna as required. Refer to the warranty policy and procedures manual if a module/component is suspect
B10C9-11	Interior Front Antenna - Circuit short to ground	■ One or both antenna wires shorted to ground or shorted to each other	■ Refer to the electrical circuit diagrams and check interior front cabin antenna circuit for short to ground, short to each other. Clear the diagnostic trouble code and retest
B10C9-	Interior Front		

12	Antenna - Circuit short to battery	■ One or both antenna wires shorted to battery	■ Refer to the electrical circuit diagrams and check interior front cabin antenna circuit for short to power. Clear the diagnostic trouble code and retest
B10C9-13	Interior Front Antenna - Circuit open	■ One or both antenna wires open	■ Refer to the electrical circuit diagrams and check interior front cabin antenna circuit for open circuit. Clear the diagnostic trouble code and retest
B10C9-1C	Interior Front Antenna - Circuit voltage out of range	■ Fault with voltage supply to all antenna drivers	■ Check and install new keyless vehicle module as required. Refer to the warranty policy and procedures manual if a module/component is suspect
B12EA-96	Radio Frequency (RF) Receiver - Component internal failure	■ RF receiver has an internal HW failure	■ Renew the receiver
B1335-00	Front Triangulation / Loadspace Antenna - No sub type information	■ Antenna failure	■ Refer to the electrical circuit diagrams and check center console front antenna circuit for short to ground, short to power. Clear the diagnostic trouble code and retest. If the problem persists, check and install new center console front antenna as required. Refer to the warranty policy and procedures manual if a module/component is suspect
B1335-11	Front Triangulation / Loadspace Antenna - Circuit short to ground	■ One or both antenna wires shorted to ground or shorted to each other	■ Refer to the electrical circuit diagrams and check center console front antenna circuit for short to ground, short to each other. Clear the diagnostic trouble code and retest

B1335-12	Front Triangulation / Loadspace Antenna - Circuit short to battery	■ One or both antenna wires shorted to battery	■ Refer to the electrical circuit diagrams and check center console front antenna circuit for short to power. Clear the diagnostic trouble code and retest
B1335-13	Front Triangulation / Loadspace Antenna - Circuit open	■ One or both antenna wires open	■ Refer to the electrical circuit diagrams and check center console front antenna circuit for open circuit. Clear the diagnostic trouble code and retest
B1335-1C	Front Triangulation / Loadspace Antenna - Circuit voltage out of range	■ Fault with voltage supply to all antenna drivers	■ Check and install new keyless vehicle module as required. Refer to the warranty policy and procedures manual if a module/component is suspect
B133D-00	Loadspace /Interior Boot Antenna - No sub type information	■ Antenna failure	■ Refer to the electrical circuit diagrams and check loadspace LHS antenna circuit for short to ground, short to power. Clear the diagnostic trouble code and retest. If the problem persists, check and install new right front door handle antenna as required. Refer to the warranty policy and procedures manual if a module/component is suspect
B133D-11	Loadspace /Interior Boot Antenna - Circuit short to ground	■ One or both antenna wires shorted to ground or shorted to each other	■ Refer to the electrical circuit diagrams and check loadspace LHS antenna circuit for short to ground, short to each other. Clear the diagnostic trouble code and retest
B133D-	Loadspace		

12	/Interior Boot Antenna - Circuit short to battery	■ One or both antenna wires shorted to battery	■ Refer to the electrical circuit diagrams and check loadspace LHS antenna circuit for short to power. Clear the diagnostic trouble code and retest
B133D-13	Loadspace /Interior Boot Antenna - Circuit open	■ One or both antenna wires open	■ Refer to the electrical circuit diagrams and check loadspace LHS antenna circuit for open circuit. Clear the diagnostic trouble code and retest
B133D-1C	Loadspace /Interior Boot Antenna - Circuit voltage out of range	■ Fault with voltage supply to all antenna drivers	■ Check and install new keyless vehicle module as required. Refer to the warranty policy and procedures manual if a module/component is suspect
U0010-00	Medium Speed CAN Communication Bus - No sub type information	■ CAN communication failure	■ Refer to the electrical circuit diagrams and check the power and ground connections to the module. Using the manufacturer approved diagnostic system, complete a CAN network integrity test. Refer to the electrical circuit diagrams and check the CAN network. Clear the diagnostic trouble code and retest. If the problem persists, check and install new keyless vehicle module as required. Refer to the warranty policy and procedures manual if a module /component is suspect
U0140-00	Lost Communication With Body Control Module - No sub type information	■ CAN connection open or fault in body control module	■ Refer to the electrical circuit diagrams and check the power and ground connections to the module. Using the manufacturer approved diagnostic system, complete a CAN network integrity test. Refer to the electrical circuit diagrams and check the CAN network between the central junction box and keyless vehicle module. Clear the diagnostic trouble code and retest. If the problem persists, check and install new body control module as required. Refer to the warranty policy and procedures manual if a module/component is suspect

U0300-00	Internal Control Module Software Incompatibility - No sub type information	■ Signal configuration file not loaded	■ Using the manufacturer approved diagnostic system check and up-date the car configuration file as required. Clear the diagnostic trouble code and re-test
U201F-00	External Receiver - No sub type information	■ Communication to the RF receiver module has been lost, short either to ground, or battery	■ Check K-Line wiring. Refer to the electrical circuit diagrams and check the module K-Line, power and ground circuits. Clear the diagnostic trouble code and retest. If the problem persists, check and install new keyless vehicle module or RF receive module as required. Refer to the warranty policy and procedures manual if a module/component is suspect
U201F-31	External Receiver - No signal	■ Communication to the RF receiver module has been lost	■ Refer to the electrical circuit diagrams and check remote keyless entry module circuit for short to power, open circuit, high resistance ■ Check and install a new RF receiver module or keyless vehicle module as required
U201F-95	External Receiver - Incorrect assembly	■ The RF receiver frequency does not match the car config file parameter	■ Verify car config value for RF frequency is correct. If not, re-configure body control module with proper car configuration file. If correct, replace RF receiver with proper frequency unit.
U2100-00	Initial Configuration Not Complete - No sub type information	■ Calibration file has not been received or is incomplete	■ Reload the correct calibration file for the vehicle type into the module using the manufacturer approved diagnostic system

U2101-00	Control Module Configuration Incompatible - No sub type information	■ Car configuration parameter is outside expected value	■ Verify car config value sent by body control module is correct for the vehicle. If not, re-configure body control module with proper car configuration file. If correct, reload the correct calibration file for the vehicle type into the module using the manufacturer approved diagnostic system
U3000-49	Control Module - Internal electronic failure	■ Internal electronic failure	■ Refer to the electrical circuit diagrams and check the power and ground circuits to the module. Refer to the warranty policy and procedures manual if a module is suspect
U3002-81	Vehicle Identification Number - Invalid serial data received	■ Invalid vehicle identification number	■ Configure the car configuration file using the manufacturer approved diagnostic system

GENERAL INFORMATION

DESCRIPTION AND OPERATION

RESTRAINTS CONTROL MODULE (RCM)

WARNING:

TO AVOID ACCIDENTAL DEPLOYMENT AND POSSIBLE PERSONAL INJURY, THE BACKUP POWER SUPPLY MUST BE DEPLETED BEFORE REPAIRING OR REPLACING ANY AIRBAG SUPPLEMENTAL RESTRAINT SYSTEM (SRS) COMPONENTS. TO DEPLETE THE BACKUP POWER SUPPLY ENERGY, DISCONNECT THE BATTERY GROUND CABLE AND WAIT TWO MINUTES. FAILURE TO FOLLOW THIS INSTRUCTION MAY RESULT IN PERSONAL INJURY.

CAUTION:

Diagnosis by substitution from a donor vehicle is **NOT** acceptable. Substitution of control modules does not guarantee confirmation of a fault, and may also cause additional faults in the vehicle being tested and/or the donor vehicle

NOTES:

- If the control module or a component is suspect and the vehicle remains under manufacturer warranty, refer to the warranty policy and procedures manual, or determine if any prior approval programme is in operation, prior to the installation of a new module/component
- Generic scan tools may not read the codes listed, or may read only 5-digit codes. Match the 5 digits from the scan tool to the first 5 digits of the 7-digit code listed to identify the fault (the last 2 digits give extra information read by the manufacturer-approved diagnostic system)
- When performing voltage or resistance tests, always use a digital multimeter accurate to three decimal places and with a current calibration certificate. When testing resistance, always take the resistance of the digital multimeter leads into account
- Check and rectify basic faults before beginning diagnostic routines involving pinpoint tests
- Inspect connectors for signs of water ingress, and pins for damage and/or corrosion
- If diagnostic trouble codes are recorded and, after performing the pinpoint tests, a fault is not present, an intermittent concern may be the cause. Always check for loose connections and corroded terminals
- Where an 'on demand self-test' is referred to, this can be accessed via the 'diagnostic trouble code monitor' tab on the manufacturers approved diagnostic system
- Check DDW for open campaigns. Refer to the corresponding bulletins and SSMs which may be valid for the specific customer complaint and carry out the recommendations as required

The table below lists all Diagnostic Trouble Codes (DTCs) that could be logged in the Restraints Control Module, for additional Diagnosis and Testing information refer to the relevant Diagnosis and Testing Section. For additional information, refer to: Air Bag and Safety Belt Pretensioner Supplemental Restraint System (SRS) (501-20B Supplemental Restraint System, Description and Operation).

DTC	DESCRIPTION	POSSIBLE CAUSES	ACTION
B0001-11	Driver frontal stage 1 deployment control - Circuit short to ground	■ Driver airbag circuit short circuit to ground	■ Refer to the electrical circuit diagrams and check driver front airbag circuit for short circuit to ground
B0001-12	Driver frontal stage 1 deployment control - Circuit short to battery	■ Driver airbag circuit short circuit to power	■ Refer to the electrical circuit diagrams and check driver front airbag circuit for short circuit to power
B0001-13	Driver frontal stage 1 deployment control - Circuit open	■ Driver airbag circuit open circuit	■ Refer to the electrical circuit diagrams and check driver front airbag circuit for open circuit
B0001-19	Driver frontal stage 1 deployment control - Circuit current above threshold	■ Driver airbag circuit current above threshold	■ Refer to the electrical circuit diagrams and check the driver airbag circuit for short circuit to another circuit
B0001-1A	Driver frontal stage 1 deployment control - Circuit resistance below threshold	■ Driver airbag circuit resistance below threshold	■ Refer to the electrical circuit diagrams and check the driver airbag circuit for short circuit to another circuit
B0001-	Driver frontal stage		

95	1 deployment control - Incorrect assembly	■ Driver airbag incorrect assembly	■ Suspect the component is installed but not registered in the car configuration file. Using the manufacturer approved diagnostic system, perform routine - Configure existing module - Restraints control module - Located under the 'extras' tab in - Diagnosis - With symptom set to – Electrical – Instruments - Warning lamps - Air bag warning lamp
B0002-11	Driver frontal stage 2 deployment control - Circuit short to ground	■ Driver airbag stage 2 circuit short circuit to ground	■ Refer to the electrical circuit diagrams and check driver airbag stage 2 circuit for short circuit to ground
B0002-12	Driver frontal stage 2 deployment control - Circuit short to battery	■ Driver front airbag stage 2 circuit short circuit to power	■ Refer to the electrical circuit diagrams and check driver airbag stage 2 circuit for short circuit to power
B0002-13	Driver frontal stage 2 deployment control - Circuit open	■ Driver front airbag stage 2 circuit open circuit	■ Refer to the electrical circuit diagrams and check driver airbag stage 2 circuit for open circuit
B0002-19	Driver frontal stage 2 deployment control - Circuit current above threshold	■ Driver front airbag stage 2 circuit current above threshold	■ Refer to the electrical circuit diagrams and check the driver airbag stage 2 circuit for short circuit to another circuit
B0002-1A	Driver frontal stage 2 deployment control - Circuit resistance below threshold	■ Driver front airbag stage 2 circuit resistance below threshold	■ Refer to the electrical circuit diagrams and check the driver airbag stage 2 circuit for short circuit to another circuit
B0002-	Driver frontal stage		

95	2 deployment control - Incorrect assembly	■ Driver front airbag stage 2 incorrect assembly	■ Suspect the component is installed but not registered in the car configuration file. Using the manufacturer approved diagnostic system, perform routine - Configure existing module - Restraints control module - Located under the 'extras' tab in - Diagnosis - With symptom set to – Electrical – Instruments - Warning lamps - Air bag warning lamp
B0004-11	Driver knee bolster deployment control - Circuit short to ground	■ Driver lower airbag circuit short circuit to ground	■ Refer to the electrical circuit diagrams and check driver lower airbag circuit for short circuit to ground
B0004-12	Driver knee bolster deployment control - Circuit short to battery	■ Driver lower airbag circuit short circuit to power	■ Refer to the electrical circuit diagrams and check driver lower airbag circuit for short circuit to power
B0004-13	Driver knee bolster deployment control - Circuit open	■ Driver lower airbag circuit open circuit	■ Refer to the electrical circuit diagrams and check driver lower airbag circuit for open circuit
B0004-19	Driver knee bolster deployment control - Circuit current above threshold	■ Driver lower airbag circuit current above threshold	■ Refer to the electrical circuit diagrams and check the driver lower airbag circuit for short circuit to another circuit
B0004-1A	Driver knee bolster deployment control - Circuit resistance below threshold	■ Driver lower airbag circuit resistance below threshold	■ Refer to the electrical circuit diagrams and check the driver lower airbag circuit for short circuit to another circuit
B0004-95	Driver knee bolster deployment control - Incorrect assembly	■ Driver lower airbag incorrect assembly	■ Suspect the component is installed but not registered in the car configuration file. Using the manufacturer approved diagnostic system, perform routine - Configure existing module - Restraints control module - Located under the 'extras' tab in - Diagnosis -

			With symptom set to – Electrical – Instruments - Warning lamps - Air bag warning lamp
B0005-95	Collapsible Steering Column Deployment Control - Incorrect assembly	■ Device is not configured but connected	■ Suspect the component is installed but not registered in the car configuration file. Using the manufacturer approved diagnostic system, perform routine - Configure existing module - Restraints control module - Located under the 'extras' tab in - Diagnosis - With symptom set to – Electrical – Instruments - Warning lamps - Air bag warning lamp
B0010-11	Passenger frontal stage 1 deployment control - Circuit short to ground	■ Passenger airbag stage 1 circuit short circuit to ground	■ Refer to the electrical circuit diagrams and check passenger airbag stage 1 circuit for short circuit to ground
B0010-12	Passenger frontal stage 1 deployment control - Circuit short to battery	■ Passenger airbag stage 1 circuit short circuit to power	■ Refer to the electrical circuit diagrams and check passenger airbag stage 1 circuit for short circuit to power
B0010-13	Passenger frontal stage 1 deployment control - Circuit open	■ Passenger airbag stage 1 circuit open circuit	■ Refer to the electrical circuit diagrams and check passenger airbag stage 1 circuit for open circuit
B0010-19	Passenger frontal stage 1 deployment control - Circuit current above threshold	■ Passenger airbag stage 1 circuit current above threshold	■ Refer to the electrical circuit diagrams and check the passenger airbag stage 1 circuit for short circuit to another circuit
B0010-1A	Passenger frontal stage 1 deployment	■ Passenger airbag stage 1 circuit resistance below threshold	■ Refer to the electrical circuit diagrams and check the passenger airbag stage 1 circuit for short circuit to another circuit

	control - Circuit resistance below threshold		
B0010-95	Passenger frontal stage 1 deployment control - Incorrect assembly	■ Passenger airbag stage 1 circuit incorrect assembly	■ Suspect the component is installed but not registered in the car configuration file. Using the manufacturer approved diagnostic system, perform routine - Configure existing module - Restraints control module - Located under the 'extras' tab in - Diagnosis - With symptom set to – Electrical – Instruments - Warning lamps - Air bag warning lamp
B0011-11	Passenger frontal stage 2 deployment control - Circuit short to ground	■ Passenger airbag stage 2 circuit short circuit to ground	■ Refer to the electrical circuit diagrams and check passenger airbag stage 2 circuit for short circuit to ground
B0011-12	Passenger frontal stage 2 deployment control - Circuit short to battery	■ Passenger airbag stage 2 circuit short circuit to power	■ Refer to the electrical circuit diagrams and check passenger airbag stage 2 circuit for short circuit to power
B0011-13	Passenger frontal stage 2 deployment control - Circuit open	■ Passenger airbag stage 2 circuit open circuit	■ Refer to the electrical circuit diagrams and check passenger airbag stage 2 circuit for open circuit
B0011-19	Passenger frontal stage 2 deployment control - Circuit current above threshold	■ Passenger airbag stage 2 circuit current above threshold	■ Refer to the electrical circuit diagrams and check the passenger airbag stage 2 circuit for short circuit to another circuit
B0011-1A	Passenger frontal stage 2 deployment	■ Passenger airbag stage 2 circuit resistance below threshold	■ Refer to the electrical circuit diagrams and check the passenger airbag stage 2 circuit for short circuit to another circuit

	control - Circuit resistance below threshold		
B0011-95	Passenger frontal stage 2 deployment control - Incorrect assembly	■ Passenger airbag stage 2 incorrect assembly	■ Suspect the component is installed but not registered in the car configuration file. Using the manufacturer approved diagnostic system, perform routine - Configure existing module - Restraints control module - Located under the 'extras' tab in - Diagnosis - With symptom set to – Electrical – Instruments - Warning lamps - Air bag warning lamp
B0050-11	Driver seatbelt sensor - Circuit short to ground	■ Driver safety belt buckle switch circuit short circuit to ground	■ Refer to the electrical circuit diagrams and check the driver pretensioner and buckle switch circuit for short circuit to ground
B0050-12	Driver seatbelt sensor - Circuit short to battery	■ Driver safety belt buckle switch circuit short circuit to power	■ Refer to the electrical circuit diagrams and check driver pretensioner and buckle switch circuit for short circuit to power
B0050-13	Driver seatbelt sensor - Circuit open	■ Driver safety belt buckle switch circuit open circuit	■ Refer to the electrical circuit diagrams and check driver pretensioner and buckle switch circuit for open circuit
B0050-19	Driver seatbelt sensor - Circuit current above threshold	■ Driver safety belt buckle switch circuit current above threshold	■ Refer to the electrical circuit diagrams and check the driver pretensioner and buckle switch circuit for short circuit to another circuit
B0050-1E	Driver seatbelt sensor - Circuit resistance out of range	■ Driver safety belt buckle switch circuit resistance out of range	■ Refer to the electrical circuit diagrams and check the driver pretensioner and buckle switch circuit for short circuit to another circuit

B0050-95	Driver seatbelt sensor - Incorrect assembly	■ Driver safety belt buckle incorrect assembly	■ Suspect the component is installed but not registered in the car configuration file. Using the manufacturer approved diagnostic system, perform routine - Configure existing module - Restraints control module - Located under the 'extras' tab in - Diagnosis - With symptom set to – Electrical – Instruments - Warning lamps - Air bag warning lamp
B0052-11	Passenger seatbelt sensor - Circuit short to ground	■ Passenger safety belt buckle switch circuit short circuit to ground	■ Refer to the electrical circuit diagrams and check the passenger pretensioner and buckle switch circuit for short circuit to ground
B0052-12	Passenger seatbelt sensor - Circuit short to battery	■ Passenger safety belt buckle switch circuit short circuit to power	■ Refer to the electrical circuit diagrams and check passenger pretensioner and buckle switch circuit for short circuit to power
B0052-13	Passenger seatbelt sensor - Circuit open	■ Passenger safety belt buckle switch circuit open circuit	■ Refer to the electrical circuit diagrams and check passenger pretensioner and buckle switch circuit for open circuit
B0052-19	Passenger seatbelt sensor - Circuit current above threshold	■ Passenger safety belt buckle switch circuit current above threshold	■ Refer to the electrical circuit diagrams and check the passenger pretensioner and buckle switch circuit for short circuit to another circuit
B0052-1E	Passenger seatbelt sensor - Circuit resistance out of range	■ Passenger safety belt buckle switch circuit resistance out of range	■ Refer to the electrical circuit diagrams and check the passenger pretensioner and buckle switch circuit for short circuit to another circuit

B0052-95	Passenger seatbelt sensor - Incorrect assembly	■ Passenger safety belt buckle incorrect assembly	■ Suspect the component is installed but not registered in the car configuration file. Using the manufacturer approved diagnostic system, perform routine - Configure existing module - Restraints control module - Located under the 'extras' tab in - Diagnosis - With symptom set to – Electrical – Instruments - Warning lamps - Air bag warning lamp
B0070-11	Driver seatbelt pretensioner deployment control - Circuit short to ground	■ Driver safety belt pretensioner circuit short circuit to ground	■ Refer to the electrical circuit diagrams and check the driver pretensioner and buckle switch circuit for short circuit to ground
B0070-12	Driver seatbelt pretensioner deployment control - Circuit short to battery	■ Driver safety belt pretensioner circuit short circuit to power	■ Refer to the electrical circuit diagrams and check driver pretensioner and buckle switch circuit for short circuit to power
B0070-13	Driver seatbelt pretensioner deployment control - Circuit open	■ Driver safety belt pretensioner circuit open circuit	■ Refer to the electrical circuit diagrams and check driver pretensioner and buckle switch circuit for open circuit
B0070-19	Driver seatbelt pretensioner deployment control - Circuit current above threshold	■ Driver safety belt pretensioner circuit current above threshold	■ Refer to the electrical circuit diagrams and check the driver pretensioner and buckle switch circuit for short circuit to another circuit
B0070-1A	Driver seatbelt pretensioner deployment control - Circuit resistance below threshold	■ Driver safety belt pretensioner circuit resistance below threshold	■ Refer to the electrical circuit diagrams and check the driver pretensioner and buckle switch circuit for short circuit to another circuit

B0070-95	Driver seatbelt pretensioner deployment control - Incorrect assembly	■ Driver safety belt pretensioner circuit incorrect assembly	■ Suspect the component is installed but not registered in the car configuration file. Using the manufacturer approved diagnostic system, perform routine - Configure existing module - Restraints control module - Located under the 'extras' tab in - Diagnosis - With symptom set to – Electrical – Instruments - Warning lamps - Air bag warning lamp
B0072-11	Passenger seatbelt pretensioner "A" deployment control - Circuit short to ground	■ Passenger safety belt buckle pretensioner circuit short circuit to ground	■ Refer to the electrical circuit diagrams and check the passenger pretensioner and buckle switch circuit for short circuit to ground
B0072-12	Passenger seatbelt pretensioner "A" deployment control - Circuit short to battery	■ Passenger safety belt buckle pretensioner circuit short circuit to power	■ Refer to the electrical circuit diagrams and check passenger pretensioner and buckle switch circuit for short circuit to power
B0072-13	Passenger seatbelt pretensioner "A" deployment control - Circuit open	■ Passenger safety belt buckle pretensioner circuit open circuit	■ Refer to the electrical circuit diagrams and check passenger pretensioner and buckle switch circuit for open circuit
B0072-19	Passenger seatbelt pretensioner "A" deployment control - Circuit current above threshold	■ Passenger safety belt buckle pretensioner circuit current above threshold	■ Refer to the electrical circuit diagrams and check the passenger pretensioner and buckle switch circuit for short circuit to another circuit
B0072-1A	Passenger seatbelt pretensioner "A" deployment control - Circuit resistance below threshold	■ Passenger safety belt buckle pretensioner circuit resistance below threshold	■ Refer to the electrical circuit diagrams and check the passenger pretensioner and buckle switch circuit for short circuit to another circuit

B0072-95	Passenger seatbelt pretensioner "A" deployment control - Incorrect assembly	■ Passenger safety belt buckle pretensioner c incorrect assembly	■ Suspect the component is installed but not registered in the car configuration file. Using the manufacturer approved diagnostic system, perform routine - Configure existing module - Restraints control module - Located under the 'extras' tab in - Diagnosis - With symptom set to – Electrical – Instruments - Warning lamps - Air bag warning lamp
B00B5-11	Driver seat track position restraints sensor - Circuit short to ground	■ Driver seat track position sensor circuit short circuit to ground	■ Refer to the electrical circuit diagrams and check the driver seat track position sensor circuit for short circuit to ground
B00B5-12	Driver seat track position restraints sensor - Circuit short to battery	■ Driver seat track position sensor circuit short circuit to power	■ Refer to the electrical circuit diagrams and check driver seat track position sensor circuit for short circuit to power
B00B5-13	Driver seat track position restraints sensor - Circuit open	■ Driver seat track position sensor circuit open circuit	■ Refer to the electrical circuit diagrams and check driver seat track position sensor circuit for open circuit
B00B5-19	Driver seat track position restraints sensor - Circuit current above threshold	■ Driver seat track position sensor circuit current above threshold	■ Refer to the electrical circuit diagrams and check the driver seat track position sensor circuit for short circuit to another circuit
B00B5-1E	Driver seat track position restraints sensor - Circuit resistance out of range	■ Driver seat track position sensor circuit resistance out of range	■ Refer to the electrical circuit diagrams and check the driver seat track position sensor circuit for short circuit to another circuit
B00B5-95	Driver seat track position restraints		■ Suspect the component is installed but not registered in the car configuration file. Using the manufacturer approved diagnostic

	sensor - Incorrect assembly	■ Driver seat track position sensor incorrect assembly	system, perform routine - Configure existing module - Restraints control module - Located under the 'extras' tab in - Diagnosis - With symptom set to – Electrical – Instruments - Warning lamps - Air bag warning lamp
B00D2-68	Restraint system malfunction indicator 1 - Event information	■ Fault event has occurred	■ Using the manufacturer approved diagnostic system, check the instrument panel cluster for DTCs and refer to relevant DTC Index
B00D2-95	Restraint system malfunction indicator 1 - Incorrect assembly	■ Restraint system malfunction indicator 1 incorrect assembly	■ Suspect the component is installed but not registered in the car configuration file. Using the manufacturer approved diagnostic system, perform routine - Configure existing module - Restraints control module - Located under the 'extras' tab in - Diagnosis - With symptom set to – Electrical – Instruments - Warning lamps - Air bag warning lamp
B00D5-12	Restraint system passenger disable indicator - Circuit short to battery	■ Passenger airbag disable indicator circuit short circuit to power	■ Refer to the electrical circuit diagrams and check passenger airbag disable indicator circuit for short circuit to power
B00D5-14	Restraint system passenger disable indicator - Circuit short to ground or open	■ Passenger airbag disable indicator circuit short circuit to ground, open circuit	■ Refer to the electrical circuit diagrams and check passenger airbag disable indicator circuit for short circuit to ground or open circuit
B00D5-95	Restraint system passenger disable indicator - Incorrect assembly	■ Passenger airbag disable indicator incorrect assembly	■ Suspect the component is installed but not registered in the car configuration file. Using the manufacturer approved diagnostic system, perform routine - Configure existing module - Restraints control module - Located under the 'extras' tab in - Diagnosis - With symptom set to – Electrical – Instruments - Warning lamps - Air bag warning lamp

B00DF-24	Restraint system passenger disable indicator - Signal stuck high	■ Passenger airbag disable switch signal stuck high	**NOTE:** Check for correct operation of the passenger air bag disable switch ■ Refer to the electrical circuit diagrams and check the passenger airbag disable switch circuit for fault. Clear the DTC and retest. If the DTC returns, suspect the passenger airbag disable switch. Replace as required, refer to the new module/component installation note at the top of the DTC index
B00DF-55	Restraint system passenger disable indicator - Not configured	■ Passenger airbag disable switch invalid configuration	■ Suspect the component is installed but not registered in the car configuration file. Using the manufacturer approved diagnostic system, perform routine - Configure existing module - Restraints control module - Located under the 'extras' tab in - Diagnosis - With symptom set to – Electrical – Instruments - Warning lamps - Air bag warning lamp
B00DF-64	Restraint system passenger disable indicator - Signal plausibility failure	■ Passenger airbag disable switch signal plausibility failure	■ Suspect the component is installed but not registered in the car configuration file. Using the manufacturer approved diagnostic system, perform routine - Configure existing module - Restraints control module - Located under the 'extras' tab in - Diagnosis - With symptom set to – Electrical – Instruments - Warning lamps - Air bag warning lamp
B10FD-11	Drivers side peripheral acceleration sensor - Circuit short to ground	■ Driver side front side impact sensor circuit short circuit to ground	■ Refer to the electrical circuit diagrams and check the driver side front side impact sensor circuit for short circuit to ground

B10FD-12	Drivers side peripheral acceleration sensor - Circuit short to battery	■ Driver side front side impact sensor circuit short circuit to power	■ Refer to the electrical circuit diagrams and check the driver side front side impact sensor circuit for short circuit to power
B10FD-19	Drivers side peripheral acceleration sensor - Circuit current above threshold	■ Driver side front side impact sensor circuit current above threshold	■ Refer to the electrical circuit diagrams and check the driver side front side impact sensor circuit for short circuit to another circuit
B10FD-4A	Drivers side peripheral acceleration sensor - Incorrect component installed	■ Driver side front side impact sensor incorrect component installed	■ Suspect the incorrect component has been installed. Cross-reference the part number to confirm the correct component is installed to vehicle specification
B10FD-87	Drivers side peripheral acceleration sensor - Missing message	■ Driver side front side impact sensor circuit missing message	■ Refer to the electrical circuit diagrams and check the driver side front side impact sensor circuit for fault. Clear the DTC and retest. If the DTC returns, suspect the driver side front side impact sensor. Replace as required, refer to the new module /component installation note at the top of the DTC index
B10FD-95	Drivers side peripheral acceleration sensor - Incorrect assembly	■ Driver side front side impact sensor incorrect assembly	■ Suspect the component is installed but not registered in the car configuration file. Using the manufacturer approved diagnostic system, perform routine - Configure existing module - Restraints control module - Located under the 'extras' tab in - Diagnosis - With symptom set to – Electrical – Instruments - Warning lamps - Air bag warning lamp
B10FD-96	Drivers side peripheral acceleration sensor	■ Driver side front side impact sensor - Failure	

	- Component internal failure		■ Clear the DTC and retest. If the DTC returns, suspect the driver side front side impact sensor. Replace as required, refer to the new module/component installation note at the top of the DTC index
B10FE-11	Passenger side peripheral acceleration sensor - Circuit short to ground	■ Passenger side front side impact sensor circuit short circuit to ground	■ Refer to the electrical circuit diagrams and check the passenger side front side impact sensor circuit for short circuit to ground
B10FE-12	Passenger side peripheral acceleration sensor - Circuit short to battery	■ Passenger side front side impact sensor circuit short circuit to power	■ Refer to the electrical circuit diagrams and check the passenger side front side impact sensor circuit for short circuit to power
B10FE-19	Passenger side peripheral acceleration sensor - Circuit current above threshold	■ Passenger side front side impact sensor circuit current above threshold	■ Refer to the electrical circuit diagrams and check the passenger side front side impact sensor circuit for short circuit to another circuit
B10FE-4A	Passenger side peripheral acceleration sensor - Incorrect component installed	■ Passenger side front side impact sensor incorrect component installed	■ Suspect the incorrect component has been installed. Cross-reference the part number to confirm the correct component is installed to vehicle specification
B10FE-87	Passenger side peripheral acceleration sensor - Missing message	■ Passenger side front side impact sensor missing message	■ Refer to the electrical circuit diagrams and check the passenger side front side impact sensor circuit for fault. Clear the DTC and retest. If the DTC returns, suspect the passenger side front side impact sensor. Replace as required, refer to the new module /component installation note at the top of the DTC index

B10FE-95	Passenger side peripheral acceleration sensor - Incorrect assembly	■ Passenger side front side impact sensor incorrect assembly	■ Suspect the component is installed but not registered in the car configuration file. Using the manufacturer approved diagnostic system, perform routine - Configure existing module - Restraints control module - Located under the 'extras' tab in - Diagnosis - With symptom set to – Electrical – Instruments - Warning lamps - Air bag warning lamp
B10FE-96	Passenger side peripheral acceleration sensor - Component internal failure	■ Passenger side front side impact sensor - Failure	■ Clear the DTC and retest. If the DTC returns, suspect the passenger side front side impact sensor. Replace as required, refer to the new module/component installation note at the top of the DTC index
B1126-11	Drivers side-side airbag deployment control - Circuit short to ground	■ Driver side airbag circuit short circuit to ground	■ Refer to the electrical circuit diagrams and check the driver side airbag circuit for short circuit to ground
B1126-12	Drivers side-side airbag deployment control - Circuit short to battery	■ Driver side airbag circuit short circuit to power	■ Refer to the electrical circuit diagrams and check the driver side airbag circuit for short circuit to power
B1126-13	Drivers side-side airbag deployment control - Circuit open	■ Driver side airbag circuit open circuit	■ Refer to the electrical circuit diagrams and check the driver side airbag circuit for open circuit
B1126-19	Drivers side-side airbag deployment control - Circuit current above threshold	■ Driver side airbag circuit current above threshold	■ Refer to the electrical circuit diagrams and check the driver side airbag circuit for short circuit to another circuit
B1126-1A	Drivers side-side airbag deployment		■ Refer to the electrical circuit diagrams and check the driver side airbag circuit for short circuit to another circuit

	control - Circuit resistance below threshold	■ Driver side airbag circuit resistance below threshold	
B1126-95	Drivers side-side airbag deployment control - Incorrect assembly	■ Driver side airbag incorrect assembly	■ Suspect the component is installed but not registered in the car configuration file. Using the manufacturer approved diagnostic system, perform routine - Configure existing module - Restraints control module - Located under the 'extras' tab in - Diagnosis - With symptom set to – Electrical – Instruments - Warning lamps - Air bag warning lamp
B1127-11	Passengers side-side airbag deployment control - Circuit short to ground	■ Passenger side airbag circuit short circuit to ground	■ Refer to the electrical circuit diagrams and check the passenger side airbag circuit for short circuit to ground
B1127-12	Passengers side-side airbag deployment control - Circuit short to battery	■ Passenger side airbag circuit short circuit to power	■ Refer to the electrical circuit diagrams and check the passenger side airbag circuit for short circuit to power
B1127-13	Passengers side-side airbag deployment control - Circuit open	■ Passenger side airbag circuit open circuit	■ Refer to the electrical circuit diagrams and check the passenger side airbag circuit for open circuit
B1127-19	Passengers side-side airbag deployment control - Circuit current above threshold	■ Passenger side airbag circuit current above threshold	■ Refer to the electrical circuit diagrams and check the passenger side airbag circuit for short circuit to another circuit

B1127-1A	Passengers side-side airbag deployment control - Circuit resistance below threshold	■ Passenger side airbag circuit resistance below threshold	■ Refer to the electrical circuit diagrams and check the passenger side airbag circuit for short circuit to another circuit
B1127-95	Passengers side-side airbag deployment control - Incorrect assembly	■ Passenger side airbag incorrect assembly	■ Suspect the component is installed but not registered in the car configuration file. Using the manufacturer approved diagnostic system, perform routine - Configure existing module - Restraints control module - Located under the 'extras' tab in - Diagnosis - With symptom set to – Electrical – Instruments - Warning lamps - Air bag warning lamp
B1128-11	Drivers side-side inflatable curtain deployment control - Circuit short to ground	■ Drivers side curtain airbag circuit short circuit to ground	■ Refer to the electrical circuit diagrams and check the drivers side curtain airbag circuit for short circuit to ground
B1128-12	Drivers side-side inflatable curtain deployment control - Circuit short to battery	■ Drivers side curtain airbag circuit short circuit to power	■ Refer to the electrical circuit diagrams and check the drivers side curtain airbag circuit for short circuit to power
B1128-13	Drivers side-side inflatable curtain deployment control - Circuit open	■ Drivers side curtain airbag circuit open circuit	■ Refer to the electrical circuit diagrams and check the drivers side curtain airbag circuit for open circuit
B1128-19	Drivers side-side inflatable curtain deployment control - Circuit current above threshold	■ Drivers side curtain airbag circuit current above threshold	■ Refer to the electrical circuit diagrams and check the drivers side curtain airbag circuit for short circuit to another circuit

B1128-1A	Drivers side-side inflatable curtain deployment control - Circuit resistance below threshold	■ Drivers side curtain airbag circuit resistance below threshold	■ Refer to the electrical circuit diagrams and check the drivers side curtain airbag circuit for short circuit to another circuit
B1128-95	Drivers side-side inflatable curtain deployment control - Incorrect assembly	■ Drivers side curtain airbag incorrect assembly	■ Suspect the component is installed but not registered in the car configuration file. Using the manufacturer approved diagnostic system, perform routine - Configure existing module - Restraints control module - Located under the 'extras' tab in - Diagnosis - With symptom set to – Electrical – Instruments - Warning lamps - Air bag warning lamp
B1129-11	Passengers side-side inflatable curtain deployment control - Circuit short to ground	■ Passengers side curtain airbag circuit short circuit to ground	■ Refer to the electrical circuit diagrams and check the passenger side curtain airbag circuit for short circuit to ground
B1129-12	Passengers side-side inflatable curtain deployment control - Circuit short to battery	■ Passengers side curtain airbag circuit short circuit to power	■ Refer to the electrical circuit diagrams and check the passenger side curtain airbag circuit for short circuit to power
B1129-13	Passengers side-side inflatable curtain deployment control - Circuit open	■ Passengers side curtain airbag circuit open circuit	■ Refer to the electrical circuit diagrams and check the passenger side curtain airbag circuit for open circuit
B1129-19	Passengers side-side inflatable curtain deployment	■ Passengers side curtain airbag circuit current above threshold	■ Refer to the electrical circuit diagrams and check the passenger side curtain airbag circuit for short circuit to another circuit

	control - Circuit current above threshold		
B1129-1A	Passengers side-side inflatable curtain deployment control - Circuit resistance below threshold	■ Passengers side curtain airbag circuit resistance below threshold	■ Refer to the electrical circuit diagrams and check the passenger side curtain airbag circuit for short circuit to another circuit
B1129-95	Passengers side-side inflatable curtain deployment control - Incorrect assembly	■ Passengers side curtain airbag incorrect assembly	■ Suspect the component is installed but not registered in the car configuration file. Using the manufacturer approved diagnostic system, perform routine - Configure existing module - Restraints control module - Located under the 'extras' tab in - Diagnosis - With symptom set to – Electrical – Instruments - Warning lamps - Air bag warning lamp
B1193-68	Crash event storage full and locked - Event information	■ Crash event storage full and locked event information	■ Replace the restraint control module
B1194-11	Driver side frontal acceleration sensor - Circuit short to ground	■ Driver side front impact sensor circuit short circuit to ground	■ Refer to the electrical circuit diagrams and check the driver side front impact sensor circuit for short circuit to ground
B1194-12	Driver side frontal acceleration sensor - Circuit short to battery	■ Driver side front impact sensor circuit short circuit to power	■ Refer to the electrical circuit diagrams and check the driver side front impact sensor circuit for short circuit to power
B1194-19	Driver side frontal acceleration sensor - Circuit current		■ Refer to the electrical circuit diagrams and check the driver side front impact sensor circuit for short circuit to another circuit

	above threshold	■ Driver side front impact sensor circuit current above threshold	
B1194-4A	Driver side frontal acceleration sensor - Incorrect component installed	■ Driver side front impact sensor circuit incorrect component installed	■ Suspect the incorrect component has been installed. Cross-reference the part number to confirm the correct component is installed to vehicle specification
B1194-87	Driver side frontal acceleration sensor - Missing message	■ Driver side front impact sensor missing message	■ Refer to the electrical circuit diagrams and check the driver side front impact sensor circuit for fault. Clear the DTC and retest. If the DTC returns, suspect the driver side front impact sensor. Replace as required, refer to the new module/component installation note at the top of the DTC index
B1194-95	Driver side frontal acceleration sensor - Incorrect assembly	■ Driver side front impact sensor circuit incorrect assembly	■ Suspect the component is installed but not registered in the car configuration file. Using the manufacturer approved diagnostic system, perform routine - Configure existing module - Restraints control module - Located under the 'extras' tab in - Diagnosis - With symptom set to – Electrical – Instruments - Warning lamps - Air bag warning lamp
B1194-96	Driver side frontal acceleration sensor - Component internal failure	■ Driver side front impact sensor circuit - Failure	■ Clear the DTC and retest. If the DTC returns, suspect the driver side front impact sensor. Replace as required, refer to the new module/component installation note at the top of the DTC index
B1195-11	Passenger side frontal acceleration sensor - Circuit short to ground	■ Passenger side front impact sensor circuit short circuit to ground	■ Refer to the electrical circuit diagrams and check the passenger side front impact sensor circuit for short circuit to ground

B1195-12	Passenger side frontal acceleration sensor - Circuit short to battery	■ Passenger side front impact sensor circuit short circuit to power	■ Refer to the electrical circuit diagrams and check the passenger side front impact sensor circuit for short circuit to power
B1195-19	Passenger side frontal acceleration sensor - Circuit current above threshold	■ Passenger side front impact sensor circuit current above threshold	■ Refer to the electrical circuit diagrams and check the passenger side front impact sensor circuit for short circuit to another circuit
B1195-4A	Passenger side frontal acceleration sensor - Incorrect component installed	■ Passenger side front impact sensor incorrect component installed	■ Suspect the incorrect component has been installed. Cross-reference the part number to confirm the correct component is installed to vehicle specification
B1195-87	Passenger side frontal acceleration sensor - Missing message	■ Passenger side front impact sensor missing message	■ Refer to the electrical circuit diagrams and check the passenger side front impact sensor circuit for fault. Clear the DTC and retest. If the DTC returns, suspect the passenger side front impact sensor. Replace as required, refer to the new module /component installation note at the top of the DTC index
B1195-95	Passenger side frontal acceleration sensor - Incorrect assembly	■ Passenger side front impact sensor incorrect assembly	■ Suspect the component is installed but not registered in the car configuration file. Using the manufacturer approved diagnostic system, perform routine - Configure existing module - Restraints control module - Located under the 'extras' tab in - Diagnosis - With symptom set to – Electrical – Instruments - Warning lamps - Air bag warning lamp
B1195-96	Passenger side frontal acceleration sensor - Component internal failure	■ Passenger side front impact sensor - Failure	■ Clear the DTC and retest. If the DTC returns, suspect the passenger side front impact sensor. Replace as required, refer to the new module/component installation note at the top of the DTC index

B1196-11	Driver side second row peripheral acceleration sensor - Circuit short to ground	■ Driver side rear side impact sensor short circuit to ground	■ Refer to the electrical circuit diagrams and check the driver side rear side impact sensor circuit for short circuit to ground
B1196-12	Driver side second row peripheral acceleration sensor - Circuit short to battery	■ Driver side rear side impact sensor short circuit to power	■ Refer to the electrical circuit diagrams and check the driver side rear side impact sensor circuit for short circuit to power
B1196-19	Driver side second row peripheral acceleration sensor - Circuit current above threshold	■ Driver side rear side impact sensor circuit current above threshold	■ Refer to the electrical circuit diagrams and check the driver side rear side impact sensor circuit for short circuit to another circuit
B1196-4A	Driver side second row peripheral acceleration sensor - Incorrect component installed	■ Driver side rear side impact sensor incorrect component installed	■ Suspect the incorrect component has been installed. Cross-reference the part number to confirm the correct component is installed to vehicle specification
B1196-87	Driver side second row peripheral acceleration sensor - Missing message	■ Driver side rear side impact sensor missing message	■ Refer to the electrical circuit diagrams and check the driver side rear side impact sensor circuit for fault. Clear the DTC and retest. If the DTC returns, suspect the driver side rear side impact sensor. Replace as required, refer to the new module/component installation note at the top of the DTC index
B1196-95	Driver side second row peripheral acceleration sensor - Incorrect assembly	■ Driver side rear side impact sensor incorrect assembly	■ Suspect the component is installed but not registered in the car configuration file. Using the manufacturer approved diagnostic system, perform routine - Configure existing module - Restraints

			control module - Located under the 'extras' tab in - Diagnosis - With symptom set to – Electrical – Instruments - Warning lamps - Air bag warning lamp
B1196-96	Driver side second row peripheral acceleration sensor - Component internal failure	■ Driver side rear side impact sensor circuit - Failure	■ Clear the DTC and retest. If the DTC returns, suspect the driver side rear side impact sensor. Replace as required, refer to the new module/component installation note at the top of the DTC index
B1197-11	Passenger side second row peripheral acceleration sensor - Circuit short to ground	■ Passenger side rear side impact sensor short circuit to ground	■ Refer to the electrical circuit diagrams and check the passenger side rear side impact sensor circuit for short circuit to ground
B1197-12	Passenger side second row peripheral acceleration sensor - Circuit short to battery	■ Passenger side rear side impact sensor crash sensor short circuit to power	■ Refer to the electrical circuit diagrams and check the passenger side rear side impact sensor circuit for short circuit to power
B1197-19	Passenger side second row peripheral acceleration sensor - Circuit current above threshold	■ Passenger side rear side impact sensor circuit current above threshold	■ Refer to the electrical circuit diagrams and check the passenger side rear side impact sensor circuit for short circuit to another circuit
B1197-4A	Passenger side second row peripheral	■ Passenger side rear side impact sensor incorrect component installed	■ Suspect the incorrect component has been installed. Cross-reference the part number to confirm the correct component is installed to vehicle specification

	acceleration sensor - Incorrect component installed		
B1197-87	Passenger side second row peripheral acceleration sensor - Missing message	■ Passenger side rear side impact sensor missing message	■ Refer to the electrical circuit diagrams and check the passenger side rear side impact sensor circuit for fault. Clear the DTC and retest. If the DTC returns, suspect the passenger side rear side impact sensor. Replace as required, refer to the new module /component installation note at the top of the DTC index
B1197-95	Passenger side second row peripheral acceleration sensor - Incorrect assembly	■ Passenger side rear side impact sensor incorrect component assembly	■ Suspect the component is installed but not registered in the car configuration file. Using the manufacturer approved diagnostic system, perform routine - Configure existing module - Restraints control module - Located under the 'extras' tab in - Diagnosis - With symptom set to – Electrical – Instruments - Warning lamps - Air bag warning lamp
B1197-96	Passenger side second row peripheral acceleration sensor - Component internal failure	■ Passenger side rear side impact sensor - Failure	■ Clear the DTC and retest. If the DTC returns, suspect the passenger side rear side impact sensor. Replace as required, refer to the new module/component installation note at the top of the DTC index
B119A-11	Second Row Drivers Side Head Airbag - Circuit short to ground	■ Second row driver side head airbag circuit short circuit to ground	■ Refer to the electrical circuit diagrams and check the second row driver side head airbag circuit for short circuit to ground
B119A-12	Second Row Drivers Side Head Airbag - Circuit short to battery	■ Second row driver side head airbag circuit short circuit to power	■ Refer to the electrical circuit diagrams and check the second row driver side head airbag circuit for short circuit to power

B119A-13	Second Row Drivers Side Head Airbag - Circuit open	■ Second row driver side head airbag circuit open circuit	■ Refer to the electrical circuit diagrams and check the second row driver side head airbag circuit for open circuit
B119A-19	Second Row Drivers Side Head Airbag - Circuit current above threshold	■ Second row driver side head airbag circuit cross coupling between 2 firing lines	■ Refer to the electrical circuit diagrams and check the second row driver side head airbag circuit for short circuit to another circuit
B119A-1A	Second Row Drivers Side Head Airbag - Circuit resistance below threshold	■ Second row driver side head airbag circuit short circuit between both lines to deployable device	■ Refer to the electrical circuit diagrams and check the second row driver side head airbag circuit for short circuit to another circuit
B119A-95	Second Row Drivers Side Head Airbag - Incorrect assembly	■ Second row driver side head airbag is not configured but connected	■ Suspect the component is installed but not registered in the car configuration file. Using the manufacturer approved diagnostic system, perform routine - Configure existing module - Restraints control module - Located under the 'extras' tab in - Diagnosis - With symptom set to – Electrical – Instruments - Warning lamps - Air bag warning lamp
B119B-11	Second Row Passengers Side Head Airbag - Circuit short to ground	■ Second row passenger side head airbag circuit short circuit to ground	■ Refer to the electrical circuit diagrams and check the second row passenger side head airbag circuit for short circuit to ground
B119B-12	Second Row Passengers Side	■ Second row passenger side head airbag circuit short circuit to power	■ Refer to the electrical circuit diagrams and check the second row passenger side head airbag circuit for short circuit to power

	Head Airbag - Circuit short to battery		
B119B-13	Second Row Passengers Side Head Airbag - Circuit open	■ Second row passenger side head airbag circuit open circuit	■ Refer to the electrical circuit diagrams and check the second row passenger side head airbag circuit for open circuit
B119B-19	Second Row Passengers Side Head Airbag - Circuit current above threshold	■ Second row passenger side head airbag circuit cross coupling between 2 firing lines	■ Refer to the electrical circuit diagrams and check the second row passenger side head airbag circuit for short circuit to another circuit
B119B-1A	Second Row Passengers Side Head Airbag - Circuit resistance below threshold	■ Second row passenger side head airbag circuit short circuit between both lines to deployable device	■ Refer to the electrical circuit diagrams and check the second row passenger side head airbag circuit for short circuit to another circuit
B119B-95	Second Row Passengers Side Head Airbag - Incorrect assembly	■ Second row passenger side head airbag device is not configured but connected	■ Suspect the component is installed but not registered in the car configuration file. Using the manufacturer approved diagnostic system, perform routine - Configure existing module - Restraints control module - Located under the 'extras' tab in - Diagnosis - With symptom set to – Electrical – Instruments - Warning lamps - Air bag warning lamp
B1A55-11	Crash record output - Circuit short to ground	■ Crash record output circuit short circuit to ground	■ Refer to the electrical circuit diagrams and check the crash record output (ENS) circuit for short circuit to ground

B1A55-12	Crash record output - Circuit short to battery	■ Crash record output circuit short circuit to power	■ Refer to the electrical circuit diagrams and check the crash record output (ENS) circuit for short circuit to power
B1D74-11	Passenger airbag cutoff enable switch - Circuit short to ground	■ Passenger airbag disable indicator circuit short circuit to ground	■ Refer to the electrical circuit diagrams and check passenger airbag disable indicator (B) circuit for short circuit to ground
B1D74-12	Passenger airbag cutoff enable switch - Circuit short to battery	■ Passenger airbag disable indicator circuit short circuit to power	■ Refer to the electrical circuit diagrams and check passenger airbag disable indicator (B) circuit for short circuit to power
B1D74-13	Passenger airbag cutoff enable switch - Circuit open	■ Passenger airbag disable switch circuit open circuit	■ Refer to the electrical circuit diagrams and check passenger airbag disable switch (B) circuit for open circuit
B1D74-19	Passenger airbag cutoff enable switch - Circuit current above threshold	■ Passenger airbag disable switch circuit current above threshold	■ Refer to the electrical circuit diagrams and check the passenger airbag disable switch (B) circuit for short circuit to another circuit
B1D74-1E	Passenger airbag cutoff enable switch - Circuit resistance out of range	■ Passenger airbag disable switch circuit resistance out of range	■ Refer to the electrical circuit diagrams and check passenger airbag disable switch (B) circuit
B1D74-95	Passenger airbag cutoff enable switch		■ Suspect the component is installed but not registered in the car configuration file. Using the manufacturer approved diagnostic

	- Incorrect assembly	■ Passenger airbag disable switch incorrect assembly	system, perform routine - Configure existing module - Restraints control module - Located under the 'extras' tab in - Diagnosis - With symptom set to – Electrical – Instruments - Warning lamps - Air bag warning lamp
B1D75-11	Passenger airbag cutoff disable switch - Circuit short to ground	■ Passenger airbag disable indicator circuit short circuit to ground	■ Refer to the electrical circuit diagrams and check passenger airbag disable indicator (A) circuit for short circuit to ground
B1D75-12	Passenger airbag cutoff disable switch - Circuit short to battery	■ Passenger airbag disable indicator circuit short circuit to power	■ Refer to the electrical circuit diagrams and check passenger airbag disable indicator (A) circuit for short circuit to power
B1D75-13	Passenger airbag cutoff disable switch - Circuit open	■ Passenger airbag disable switch circuit open circuit	■ Refer to the electrical circuit diagrams and check passenger airbag disable switch (A) circuit for open circuit
B1D75-19	Passenger airbag cutoff disable switch - Circuit current above threshold	■ Passenger airbag disable switch circuit current above threshold	■ Refer to the electrical circuit diagrams and check the passenger airbag disable switch (A) circuit for short circuit to another circuit
B1D75-1E	Passenger airbag cutoff disable switch - Circuit resistance out of range	■ Passenger airbag disable switch circuit resistance out of range	■ Refer to the electrical circuit diagrams and check the passenger airbag disable switch (A) circuit for short circuit to another circuit
B1D75-95	Passenger airbag cutoff disable switch		■ Suspect the component is installed but not registered in the car configuration file. Using the manufacturer approved diagnostic

	- Incorrect assembly	■ Passenger airbag disable switch incorrect assembly	system, perform routine - Configure existing module - Restraints control module - Located under the 'extras' tab in - Diagnosis - With symptom set to – Electrical – Instruments - Warning lamps - Air bag warning lamp
U0001-88	High speed CAN communication bus - Bus off	■ High speed CAN communication bus off	■ Refer to the electrical circuit diagrams and check the CAN bus connections to the module. Using the manufacturer approved diagnostic system, complete a CAN network integrity test. Check other modules for related DTCs and refer to relevant DTC index
U0100-00	Lost communication with ECM/PCM "A" - No sub type information	■ Lost communication with the engine control module	■ Refer to the electrical circuit diagrams and check the power, ground and CAN bus connections to the engine control module. Using the manufacturer approved diagnostic system, complete a CAN network integrity test. Check other modules for related DTCs and refer to relevant DTC index
U0121-00	Lost communication with anti-lock brake system (ABS) control module - No sub type information	■ Lost communication with anti-lock brake system (ABS) control module	■ Refer to the electrical circuit diagrams and check the power, ground and CAN bus connections to the anti-lock brake system (ABS) control module. Using the manufacturer approved diagnostic system, complete a CAN network integrity test. Check other modules for related DTCs and refer to relevant DTC index
U0128-00	Lost communication with park brake control module - No sub type information	■ Lost communication with park brake control module	■ Refer to the electrical circuit diagrams and check the power, ground and CAN bus connections to the park brake control module. Using the manufacturer approved diagnostic system, complete a CAN network integrity test. Check other modules for related DTCs and refer to relevant DTC index
U0154-00	Lost communication with restraints occupant classification	■ Lost communication with the occupant classification system module	■ Refer to the electrical circuit diagrams and check the power, ground and CAN bus connections to the occupant classification

	system module - No sub type information		system module. Using the manufacturer approved diagnostic system, complete a CAN network integrity test. Check other modules for related DTCs and refer to relevant DTC index
U0155-00	Lost communication with instrument panel cluster (IPC) control module - No sub type information	■ Lost communication with the instrument panel cluster module	■ Refer to the electrical circuit diagrams and check the power, ground and CAN bus connections to the instrument panel cluster module. Using the manufacturer approved diagnostic system, complete a CAN network integrity test. Check other modules for related DTCs and refer to relevant DTC index
U0300-00	Internal control module Software Incompatibility - No sub type information	■ Internal control module software incompatibility	△ NOTE: Suspect the incorrect software had been installed to the restraints control module ■ Check and confirm the correct restraints control software is installed to vehicle specifications
U0415-00	Invalid Data Received From anti-lock brake system (ABS) control module - No sub type information	■ Invalid data received from anti-lock brake system (ABS) control module	■ Check the anti-lock brake system (ABS) control module for related DTCs and refer to the relevant DTC index
U0455-64	Invalid data received from restraints occupant classification	■ Invalid data received from the restraints occupant classification system module signal plausibility failure	■ Check the restraints occupant classification system module for related DTCs and refer to the relevant DTC index

	system module - Signal plausibility failure		
U0455-92	Invalid data received from restraints occupant classification system module - Performance or incorrect operation	■ Invalid data received from the restraints occupant classification system module performance or incorrect operation	■ Check the restraints occupant classification system module for related DTCs and refer to the relevant DTC index
U0455-93	Invalid data received from restraints occupant classification system module - No operation	■ No operation	■ Check the restraints occupant classification system module for related DTCs and refer to the relevant DTC index
U0455-94	Invalid data received from restraints occupant classification system module - Unexpected operation	■ Invalid data received from the restraints occupant classification system module unexpected operation	■ Check the restraints occupant classification system module for related DTCs and refer to the relevant DTC index
U2012-51	Car configuration parameter(s) - Not programmed	■ Car configuration parameter(s) not programmed	■ Check/amend the car configuration file using manufacturer approved diagnostic system
U2100-00	Initial configuration not complete - No sub type information	■ Initial configuration not complete	**NOTE:** The restraints control module is in factory mode, restraints system not active

			▪ Configure the restraints control module as a new module using the manufacturer approved diagnostic system
U2101-00	Control module Configuration Incompatible - No sub type information	▪ Control module configuration incompatible	▪ Suspect the component is installed but not registered in the car configuration file. Using the manufacturer approved diagnostic system, perform routine - Configure existing module - Restraints control module - Located under the 'extras' tab in - Diagnosis - With symptom set to – Electrical – Instruments - Warning lamps - Air bag warning lamp
U3000-49	Control module - Internal electronic failure	▪ Control module - Failure	▪ Clear the DTC and retest. If the DTC returns, suspect the restraints control module. Replace as required, refer to the new module/component installation note at the top of the DTC Index
U3003-62	Battery Voltage - Signal compare failure	▪ Mismatch in battery voltage, of 2 volts or more, between restraints control module and the voltage transmitted over the CAN Bus	△ NOTE: The restraint control module grounds through the fixings ▪ Refer to the electrical circuit diagrams and check the power and ground circuits to the restraint control module
U3006-17	Control module Input Power "A" - Circuit voltage above threshold	▪ Control module input power (A) circuit voltage above threshold	△ NOTE: DTC may be logged due to battery charger use or vehicle charging fault

			■ Check other modules for related DTCs. Check vehicle battery and charging system. Refer to the relevant section in the workshop manual
U3006-68	Control module Input Power "A" - Event information	■ The restraints control module has registered the power supply has been interrupted	■ Check other modules for related DTCs. Refer to the electrical circuit diagrams and check the circuit between the power and ground circuits to the restraint control module
U3008-13	Control module Ground "A" - Circuit open	■ Control module ground (A) open circuit	**NOTE:** The restraint control module grounds through the fixings ■ Refer to the electrical circuit diagrams and check the restraints control module ground - Circuit reference - E110_NEG - Short circuit to power, open circuit, high resistance

2012.0 RANGE ROVER (LM), 100-00

GENERAL INFORMATION

DESCRIPTION AND OPERATION

RETRACTABLE RUNNING BOARD MODULE (RBM)

CAUTION:

Diagnosis by substitution from a donor vehicle is **NOT** acceptable. Substitution of control modules does not guarantee confirmation of a fault, and may also cause additional faults in the vehicle being tested and/or the donor vehicle

NOTES:

- If the control module or a component is suspect and the vehicle remains under manufacturer warranty, refer to the warranty policy and procedures manual, or determine if any prior approval programme is in operation, prior to the installation of a new module/component
- Generic scan tools may not read the codes listed, or may read only 5-digit codes. Match the 5 digits from the scan tool to the first 5 digits of the 7-digit code listed to identify the fault (the last 2 digits give extra information read by the manufacturer-approved diagnostic system)
- When performing voltage or resistance tests, always use a digital multimeter accurate to three decimal places and with a current calibration certificate. When testing resistance, always take the resistance of the digital multimeter leads into account
- Check and rectify basic faults before beginning diagnostic routines involving pinpoint tests
- Inspect connectors for signs of water ingress, and pins for damage and/or corrosion
- If diagnostic trouble codes are recorded and, after performing the pinpoint tests, a fault is not present, an intermittent concern may be the cause. Always check for loose connections and corroded terminals
- Where an 'on demand self-test' is referred to, this can be accessed via the 'diagnostic trouble code monitor' tab on the manufacturers approved diagnostic system
- Check DDW for open campaigns. Refer to the corresponding bulletins and SSMs which may be valid for the specific customer complaint and carry out the recommendations as required

The table below lists all Diagnostic Trouble Codes (DTCs) that could be logged in the Retractable Running Board Module, for additional Diagnosis and Testing information refer to the relevant Diagnosis and Testing Section. For additional information, refer to: Retractable Running Board (501-08 Exterior Trim and Ornamentation, Diagnosis and Testing).

DTC	DESCRIPTION	POSSIBLE CAUSES	ACTION
C1002-77	Left Power Running Board Stow - Commanded position not reachable	■ Mechanical fault with the link ■ Output shaft torque ring slipping	■ Check the power side retractable running board hinge for dirt and debris, wash the step if necessary. Remove the wedge key and check the retractable running board hinge for free movement and if NOT OK renew the retractable running board hinge. If OK renew the retractable running board motor
C1003-77	Right Power Running Board Stow - Commanded position not reachable	■ Mechanical fault with the link ■ Output shaft torque ring slipping	■ Check the power side retractable running board hinge for dirt and debris, wash the step if necessary. Remove the wedge key and check the retractable running board hinge for free movement and if NOT OK renew the retractable running board hinge. If OK renew the retractable running board motor
C1004-77	Right Power Running Board Deploy - Commanded position not reachable	■ Mechanical fault with the link ■ Output shaft torque ring slipping	■ Check the power side retractable running board hinge for dirt and debris, wash the step if necessary. Remove the wedge key and check the retractable running board hinge for free movement and if NOT OK renew the retractable running board hinge. If OK renew the retractable running board motor
C1005-77	Left Power Running Board Deploy -	■ Mechanical fault with the link	■ Check the power side retractable running board hinge for dirt and debris, wash the step if necessary. Remove the wedge key and check the retractable running board hinge for free movement and if NOT OK renew the retractable running board hinge. If OK renew the retractable running board motor

	Commanded position not reachable	■ Output shaft torque ring slipping	
C1006-11	Left Power Running Board Motor - Circuit short to ground	■ Retractable running board motor circuit short circuit to ground ■ Faulty retractable running board motor ■ Control module	■ Disconnect the retractable running board motor and the retractable running board module, check the circuit and repair/renew as necessary. Check the retractable running board motor connections for security and integrity. If faulty renew the retractable running board motor. If the wiring harness and retractable running board motor are OK, renew the retractable running board module. Refer to the warranty policy and procedures manual if the module is suspect. Clear DTCs and check for normal operation
C1006-12	Left Power Running Board Motor - Circuit short to battery	■ Retractable running board motor stow or deploy circuit short circuit to power ■ Faulty retractable running board motor ■ Control module	■ Disconnect the retractable running board motor and the retractable running board module, check the circuit and repair/renew as necessary. Check the retractable running board motor connections for security and integrity. If faulty renew the retractable running board motor. If the wiring harness and retractable running board motor are OK, renew the retractable running board module. Refer to the warranty policy and procedures manual if the module is suspect. Clear DTCs and check for normal operation
C1006-13	Left Power Running Board Motor - Circuit open	■ Retractable running board motor stow or deploy circuit open circuit	■ Disconnect the retractable running board motor and the retractable running board module, check the circuit and repair/renew as necessary. Check the retractable running board motor connections for security and integrity. If faulty renew the retractable running board motor. If the wiring harness and retractable running board motor are OK, renew the retractable running board module. Refer to the warranty policy and

		■ Faulty retractable running board motor ■ Control module	procedures manual if the module is suspect. Clear DTCs and check for normal operation
C1006-19	Left Power Running Board Motor - Circuit current above threshold	■ Retractable running board motor stow or deploy circuit current above threshold ■ Faulty retractable running board motor ■ Control module	■ Disconnect the retractable running board motor and the retractable running board module, check the circuit and repair/renew as necessary. Check the retractable running board motor connections for security and integrity. If faulty renew the retractable running board motor. If the wiring harness and retractable running board motor are OK, renew the retractable running board module. Refer to the warranty policy and procedures manual if the module is suspect. Clear DTCs and check for normal operation
C1006-67	Left Power Running Board Motor - Signal incorrect after event	■ Retractable running board motor stow or deploy signal incorrect after event ■ Faulty retractable running board motor ■ Control module	■ Disconnect the retractable running board motor and the retractable running board module, check the circuit and repair/renew as necessary. Check the retractable running board motor connections for security and integrity. If faulty renew the retractable running board motor. If the wiring harness and retractable running board motor are OK, renew the retractable running board module. Refer to the warranty policy and procedures manual if the module is suspect. Clear DTCs and check for normal operation
C1007-11	Right Power Running Board Motor - Circuit short to ground	■ Retractable running board	■ Disconnect the retractable running board motor and the retractable running board module, check the circuit and repair/renew as necessary. Check the retractable running board motor connections for security and integrity. If faulty renew the retractable running board motor. If the wiring

		motor circuit short circuit to ground ■ Faulty retractable running board motor ■ Control module	harness and retractable running board motor are OK, renew the retractable running board module. Refer to the warranty policy and procedures manual if the module is suspect. Clear DTCs and check for normal operation
C1007-12	Right Power Running Board Motor - Circuit short to battery	■ Retractable running board motor stow or deploy circuit short circuit to power ■ Faulty retractable running board motor ■ Control module	■ Disconnect the retractable running board motor and the retractable running board module, check the circuit and repair/renew as necessary. Check the retractable running board motor connections for security and integrity. If faulty renew the retractable running board motor. If the wiring harness and retractable running board motor are OK, renew the retractable running board module. Refer to the warranty policy and procedures manual if the module is suspect. Clear DTCs and check for normal operation
C1007-13	Right Power Running Board Motor - Circuit open	■ Retractable running board motor stow or deploy circuit open circuit ■ Faulty retractable running board motor ■ Control module	■ Disconnect the retractable running board motor and the retractable running board module, check the circuit and repair/renew as necessary. Check the retractable running board motor connections for security and integrity. If faulty renew the retractable running board motor. If the wiring harness and retractable running board motor are OK, renew the retractable running board module. Refer to the warranty policy and procedures manual if the module is suspect. Clear DTCs and check for normal operation
C1007-	Right Power		

19	Running Board Motor - Circuit current above threshold	■ Retractable running board motor stow or deploy circuit current above threshold ■ Faulty retractable running board motor ■ Control module	■ Disconnect the retractable running board motor and the retractable running board module, check the circuit and repair/renew as necessary. Check the retractable running board motor connections for security and integrity. If faulty renew the retractable running board motor. If the wiring harness and retractable running board motor are OK, renew the retractable running board module. Refer to the warranty policy and procedures manual if the module is suspect. Clear DTCs and check for normal operation
C1007-67	Right Power Running Board Motor - Signal incorrect after event	■ Retractable running board motor stow or deploy signal incorrect after event ■ Faulty retractable running board motor ■ Control module	■ Disconnect the retractable running board motor and the retractable running board module, check the circuit and repair/renew as necessary. Check the retractable running board motor connections for security and integrity. If faulty renew the retractable running board motor. If the wiring harness and retractable running board motor are OK, renew the retractable running board module. Refer to the warranty policy and procedures manual if the module is suspect. Clear DTCs and check for normal operation
C1008-29	Left Power Running Board Position/Motion Sensor - Signal invalid	■ Invalid signal ■ Motor hall effect sensor fault ■ Retractable running board motor fault	■ Connect an oscilloscope to the hall effect signal line (Refer to the electrical circuit diagrams) and cycle the retractable running board. If the hall effect pulse width is shorter than 1.5ms, then renew the retractable running board motor assembly
C1008-	Left Power		

3A	Running Board Position/Motion Sensor - Incorrect has too many pulses	■ Output shaft torque ring slipping	■ Check the power side retractable running board hinge for dirt and debris, wash the step if necessary. Remove the wedge key and check the retractable running board hinge for free movement and if NOT OK renew the retractable running board hinge. If OK renew the retractable running board motor
C1008-93	Left Power Running Board Position/Motion Sensor - No operation	■ Retractable running board motor fault	■ Renew the motor, clear DTCs and check for normal operation
C1009-29	Right Power Running Board Position/Motion Sensor - Signal invalid	■ Invalid signal ■ Motor hall effect sensor fault ■ Retractable running board motor fault	■ Connect an oscilloscope to the hall effect signal line (Refer to the electrical circuit diagrams) and cycle the retractable running board. If the hall effect pulse width is shorter than 1.5ms, then renew the retractable running board motor assembly
C1009-3A	Right Power Running Board Position/Motion Sensor - Incorrect has too many pulses	■ Output shaft torque ring slipping	■ Check the power side retractable running board hinge for dirt and debris, wash the step if necessary. Remove the wedge key and check the retractable running board hinge for free movement and if NOT OK renew the retractable running board hinge. If OK renew the retractable running board motor
C1009-93	Right Power Running Board Position/Motion Sensor - No operation	■ Retractable running board motor fault	■ Renew the motor, clear DTCs and check for normal operation

C1B14-11	Sensor Supply Voltage A - Circuit short to ground	■ Retractable running board motor hall effect sensor power circuit short to ground ■ Retractable running board motor fault ■ Control module	■ Disconnect the motor and check the voltage on the hall effect sensor line (Refer to the electrical circuit diagrams), if OK renew the retractable running board motor. If not check harness for short or open circuit and repair/renew as necessary. If OK renew the retractable running board module. Refer to the warranty policy and procedures manual if the module is suspect
C1B14-12	Sensor Supply Voltage A - Circuit short to battery	■ Retractable running board motor hall effect sensor power circuit short to power	■ Remove the ignition key, close the doors and wait 5 minutes for the vehicle to enter into sleep mode. Disconnect the retractable running board motor from vehicle harness and ensure the vehicle has remained in sleep mode. Measure the voltage between the hall effect sensor supply line and ground. If voltage is present repair/renew as necessary. If voltage is not present, check the retractable running board motor harness for short to power. If found repair/renew as necessary or renew the retractable running board motor
U0010-88	Medium Speed CAN Communication Bus - Bus off	■ Bus off	■ Refer to the electrical circuit diagrams and check the power and ground connections to the module. Using the manufacturer approved diagnostic system, complete a CAN network integrity test. Refer to the electrical circuit diagrams and check the CAN network
U0121-68	Lost Communication With Anti-Lock Brake System (ABS) Control Module - Event information	■ Incorrect signal received	■ Check the Anti-Lock Brake System Control Module for related DTCs and refer to the relevant DTC index. Refer to the electrical circuit diagrams and check the power and ground connections to the module. Using the manufacturer approved diagnostic system, complete a CAN network integrity test. Refer to the electrical circuit diagrams and check the CAN network between the Anti-Lock Brake System Control Module and Retractable Running Board Control Module

U0140-00	Lost Communication With Body Control Module - No sub type information	■ CAN harness link between Retractable Running Board Control Module and Body Control Module network malfunction ■ Retractable Running Board Control Module has not received the expected CAN signal from the Body Control Module within the specified time interval	■ Check the Body Control Module for related DTCs and refer to the relevant DTC index. Refer to the electrical circuit diagrams and check the power and ground connections to the module. Using the manufacturer approved diagnostic system, complete a CAN network integrity test. Refer to the electrical circuit diagrams and check the CAN network between the Body Control Module and Retractable Running Board Control Module
U0300-00	Internal Control Module Software Incompatibility - No sub type information	■ Incorrect control module installed	■ Check that the correct module is installed to the vehicle. Check the module software level and install the latest version if necessary. Refer to the warranty and policy and procedures manual if a retractable running board module is suspect
U0439-68	Invalid Data Received From All Terrain Control Module - Event information	■ Incorrect signal received	■ Check the All Terrain Control Module for related DTCs and refer to the relevant DTC index
U1001-	Switch Pack -	■ Switch stuck	

23	Switch Circuit - Signal stuck low	■ Switch circuit short circuit to ground	■ Check the switch operation. Refer to the electrical circuit diagrams and check the switch circuit. Repair/renew as necessary
U1002-11	Switch Pack - Status Indicator Circuit - Circuit short to ground	■ Switch circuit short circuit to ground (switch LED remains illuminated)	■ Refer to the electrical circuit diagrams and check the switch LED circuit. Repair/renew as necessary
U1002-12	Switch Pack - Status Indicator Circuit - Circuit short to battery	■ Switch circuit short circuit to power (switch LED remains illuminated)	■ Refer to the electrical circuit diagrams and check the switch LED circuit. Repair/renew as necessary
U2101-00	Control Module Configuration Incompatible - No sub type information	■ No sub type information	■ Using the manufacturers approved diagnostic system, check the set-up of the car configuration file and the software version of the control module
U3000-41	Control Module - General checksum failure	■ Retractable running board module RAM fault (data memory failure leading to possible corrupt local configuration file)	■ Configure the module using the approved diagnostic system and download the local configuration file. Clear the DTC and retest. If the problem persists, renew the module. Refer to the warranty policy and procedures manual if a module is suspect
U3000-49	Control Module - Internal	■ Internal electronic failure	■ Renew the module. Refer to the warranty policy and procedures manual if a module is suspect

	electronic failure		
U3000-52	Control Module - Not activated	■ Module not activated	■ Using the manufacturers approved diagnostic system, check the set-up of the car configuration file and correct/activate as necessary
U3003-16	Battery Voltage - Circuit voltage below threshold	■ Battery voltage below threshold (8 volts)	■ Check vehicle battery and charging system. Refer to the relevant section in the workshop manual. Refer to the electrical circuit diagrams and check the power supply circuits to the module
U3003-17	Battery Voltage - Circuit voltage above threshold	■ Battery voltage above threshold	■ Check vehicle battery and charging system. Refer to the relevant section in the workshop manual. Refer to the electrical circuit diagrams and check the power supply circuits to the module
U3003-62	Battery Voltage - Signal compare failure	■ Battery voltage signal compare failure	■ Refer to the electrical circuit diagrams and check the power and ground circuits to the control module. Clear the DTC and retest. If the problem persists, renew the module. Refer to the warranty policy and procedures manual if a module is suspect

2012.0 RANGE ROVER (LM), 100-00

GENERAL INFORMATION

DESCRIPTION AND OPERATION

SATELLITE DIGITAL AUDIO RADIO SYSTEM MODULE (SARM)

CAUTION:

Diagnosis by substitution from a donor vehicle is **NOT** acceptable. Substitution of control modules does not guarantee confirmation of a fault, and may also cause additional faults in the vehicle being tested and/or the donor vehicle

NOTES:

- If the control module or a component is suspect and the vehicle remains under manufacturer warranty, refer to the warranty policy and procedures manual, or determine if any prior approval programme is in operation, prior to the installation of a new module/component
- Generic scan tools may not read the codes listed, or may read only 5-digit codes. Match the 5 digits from the scan tool to the first 5 digits of the 7-digit code listed to identify the fault (the last 2 digits give extra information read by the manufacturer-approved diagnostic system)
- When performing voltage or resistance tests, always use a digital multimeter accurate to three decimal places and with a current calibration certificate. When testing resistance, always take the resistance of the digital multimeter leads into account
- Check and rectify basic faults before beginning diagnostic routines involving pinpoint tests
- Inspect connectors for signs of water ingress, and pins for damage and/or corrosion
- If diagnostic trouble codes are recorded and, after performing the pinpoint tests, a fault is not present, an intermittent concern may be the cause. Always check for loose connections and corroded terminals
- Where an 'on demand self-test' is referred to, this can be accessed via the 'diagnostic trouble code monitor' tab on the manufacturers approved diagnostic system
- Check DDW for open campaigns. Refer to the corresponding bulletins and SSMs which may be valid for the specific customer complaint and carry out the recommendations as required

The table below lists all Diagnostic Trouble Codes (DTCs) that could be logged in the Satellite Digital Audio Radio System Module, for additional Diagnosis and Testing information refer to the relevant Diagnosis and Testing Section.

DTC	DESCRIPTION	POSSIBLE CAUSES	ACTION
B1A89-11	Satellite Antenna - Circuit short to ground	■ Circuit short to power. The Satellite Digital Audio Radio Module has detected a vehicle power measurement for a period longer than expected, or has detected a vehicle power measurement when another value was expected ■ Satellite Digital Audio Radio antenna cable short to ground ■ Internal failure Satellite Digital Audio Radio Module ■ Internal failure Satellite Digital Audio Radio antenna	■ Refer to the electrical circuit diagrams and check Satellite Digital Audio Radio antenna cable for short to ground. Install Satellite Digital Audio Radio antenna harness as required. Suspect the Satellite Digital Audio Radio Module, check and install a new Satellite Digital Audio Radio Module as required. Suspect the Satellite Digital Audio Radio antenna, check and install a new Satellite Digital Audio Radio antenna as required. Refer to the warranty policy and procedures manual if a Module is suspect
B1A89-12	Satellite Antenna - Circuit short to battery	■ Circuit short to power. The Satellite Digital Audio Radio Module has detected a vehicle power measurement for a period longer than expected, or has detected a vehicle power measurement when another value was expected	■ Refer to the electrical circuit diagrams and check Satellite Digital Audio Radio antenna cable for short to power. Install Satellite Digital Audio Radio antenna harness as required. Suspect the Satellite Digital Audio Radio Module, check and install a new Satellite Digital Audio Radio Module as required. Suspect the Satellite Digital Audio Radio antenna, check and install a new Satellite Digital Audio Radio antenna as required. Refer to the warranty policy and procedures manual if a module is suspect

		■ Satellite Digital Audio Radio antenna cable short to power ■ Internal failure Satellite Digital Audio Radio Module ■ Internal failure Satellite Digital Audio Radio antenna	
B1A89-13	Satellite Antenna - Circuit open	■ Circuit open. The Satellite Digital Audio Radio Module has determined an open circuit via lack of bias voltage, low current flow, no change in the state of an input in response to an output ■ Satellite Digital Audio Radio antenna cable open circuit ■ Internal failure Satellite Digital Audio Radio Module ■ Internal failure Satellite Digital Audio Radio antenna	■ Refer to the electrical circuit diagrams and check Satellite Digital Audio Radio antenna cable for open circuit. Install Satellite Digital Audio Radio antenna harness as required. Suspect the Satellite Digital Audio Radio Module, check and install a new Satellite Digital Audio Radio Module as required. Suspect the Satellite Digital Audio Radio antenna, check and install a new Satellite Digital Audio Radio antenna as required. Refer to the warranty policy and procedures manual if a module is suspect
U3000-04	Control Module - System internal failures	■ Satellite Digital Audio Radio Module internal failure	■ Suspect the Satellite Digital Audio Radio Module, check and install a new Satellite Digital Audio Radio Module as required, Refer to the warranty policy and procedures manual if a module is suspect
U3000-4A	Control Module - Incorrect	■ Satellite Digital Audio Radio Module. Incorrect component installed	

	component installed	■ Car configuration mismatch	■ Using the manufacturer approved diagnostic system select the vehicle configuration Main Menu, vehicle configuration, display and or modify the vehicle configuration file data. Check update as required
U3000-55	Control Module - Not configured	■ Satellite Digital Audio Radio Module, not configured ■ Incorrect car configuration file data received	■ Using the manufacturer approved diagnostic system select the vehicle configuration main menu, select configure existing Modules menu and program the Satellite Digital Audio Radio Module

2012.0 RANGE ROVER (LM), 100-00

GENERAL INFORMATION

DESCRIPTION AND OPERATION

SPEED CONTROL MODULE (CCM)

CAUTION:

Diagnosis by substitution from a donor vehicle is **NOT** acceptable. Substitution of control modules does not guarantee confirmation of a fault, and may also cause additional faults in the vehicle being tested and/or the donor vehicle

NOTES:

- If the control module or a component is suspect and the vehicle remains under manufacturer warranty, refer to the warranty policy and procedures manual, or determine if any prior approval programme is in operation, prior to the installation of a new module/component
- Generic scan tools may not read the codes listed, or may read only 5-digit codes. Match the 5 digits from the scan tool to the first 5 digits of the 7-digit code listed to identify the fault (the last 2 digits give extra information read by the manufacturer-approved diagnostic system)
- When performing voltage or resistance tests, always use a digital multimeter accurate to three decimal places and with a current calibration certificate. When testing resistance, always take the resistance of the digital multimeter leads into account
- Check and rectify basic faults before beginning diagnostic routines involving pinpoint tests
- Inspect connectors for signs of water ingress, and pins for damage and/or corrosion
- If diagnostic trouble codes are recorded and, after performing the pinpoint tests, a fault is not present, an intermittent concern may be the cause. Always check for loose connections and corroded terminals
- Where an 'on demand self-test' is referred to, this can be accessed via the 'diagnostic trouble code monitor' tab on the manufacturers approved diagnostic system
- Check DDW for open campaigns. Refer to the corresponding bulletins and SSMs which may be valid for the specific customer complaint and carry out the recommendations as required

The table below lists all Diagnostic Trouble Codes (DTCs) that could be logged in the Speed Control Module, for additional Diagnosis and Testing information refer to the relevant Diagnosis and Testing Section.
For additional information, refer to: Speed Control (310-03 Speed Control - V8 5.0L Petrol/V8 S/C 5.0L Petrol, 5.0L, Diagnosis and Testing).

DTC	DESCRIPTION	POSSIBLE CAUSES	ACTION
B1A84-81	Car Configuration Data - Invalid serial data received	NOTE: Adaptive Cruise Control (ACC) is disabled and Instrument Pack (IPC) displays warning message "Cruise Not Available" ■ Incorrect Car Configuration File (CCF) parameters in the Central Junction Box (CJB)	■ Using the manufacturer approved diagnostic system re-configure the Central Junction Box (CJB) Car Configuration File (CCF), clear the DTC and retest the system
C1A67-54	Forward Looking Sensor - Missing calibration	NOTE: Adaptive Cruise Control (ACC) is disabled and Instrument Pack (IPC) displays warning message "Cruise Not Available"	■ Refer to the relevant section of the workshop manual and carry out speed control sensor alignment procedure

		■ This DTC will clear when the speed control sensor is correctly aligned	
C1A67-87	Forward Looking Sensor - Missing message	**NOTE:** Adaptive Cruise Control (ACC) is disabled and Instrument Pack (IPC) displays warning message "Cruise Not Available" ■ Internal communication error between DSP and Host	■ Using the manufacturer approved diagnostic system clear the DTC and retest. If the DTC remains check and install Speed Control Module (CCM) as required. Refer to the Warranty Policy and Procedures manual, or determine if any prior approval programme is in operation, prior to the installation of a new module/component
C1A67-96	Forward Looking Sensor - Component internal failure	**NOTE:** Adaptive Cruise Control (ACC) is disabled and Instrument Pack (IPC) displays warning message "Cruise Not Available" ■ Speed control sensor unreasonable radar data	■ Install speed control sensor as required. Refer to the Warranty Policy and Procedures manual, or determine if any prior approval programme is in operation, prior to the installation of a new module/component
C1A67-	Forward Looking		

97	Sensor - Component or system operation obstructed or blocked	**NOTE:** Adaptive cruise control is disabled and instrument pack displays warning message "radar sensor blocked" ■ Adaptive speed control module obstructed by snow, heavy rain or paint protection covering ■ The adaptive speed control module misaligned	■ Check and clear any obstructions from the sensor. This DTC will be cleared automatically when environmental conditions allow ■ Using the manufacturer approved diagnostic system, clear the DTCs and retest. If the fault persists, refer to the relevant section of the workshop manual and adjust the adaptive speed control module alignment
C1A67-98	Forward Looking Sensor - Component or system over temperature	**NOTE:** Adaptive Cruise Control (ACC) is disabled and Instrument Pack (IPC) displays warning message "Cruise Not Available" ■ Speed control sensor is over temperature	■ Clear the DTC, allow vehicle to cool down and retest ■ Consider the atmospheric conditions before suspecting the component ■ This fault will be cleared automatically when environmental conditions allow
P174E-29	Output Shaft Speed / ABS	**NOTE:**	■ Check the Anti-Lock Brake System (ABS) control module for DTCs and refer to the relevant DTC index

	Wheel Speed Correlation - Signal invalid	NOTE: Adaptive Cruise Control (ACC) is disabled and Instrument Pack (IPC) displays warning message "Cruise Not Available" ■ Speed Control Module (CCM) has received greater than expected wheel speed data from the Anti-Lock Brake System (ABS) control module	■ Clear the DTC and retest the system
U0001-88	High Speed CAN Communication Bus - Bus off	NOTE: Adaptive Cruise Control (ACC) is disabled and Instrument Pack (IPC) displays warning message "Cruise Not Available" ■ High speed CAN bus circuit short to ground, short to power, open circuit ■ High speed CAN bus circuit, short between CAN high and CAN low	■ Refer to the electrical circuit diagrams and check high speed CAN bus for short to ground, short to power, open circuit, short between CAN high and CAN low
U0100-	Lost		

00	Communication With ECM/PCM "A" - No sub type information	**NOTE:** Adaptive Cruise Control (ACC) is disabled and Instrument Pack (IPC) displays warning message "Cruise Not Available" ■ CAN harness link between Speed Control Module (CCM) and Engine Control Module (ECM) network malfunction ■ The Speed Control Module (CCM) has not received the expected CAN signal from the Engine Control Module (ECM) within the specified time interval	■ Using the manufacturer approved diagnostic system, check Engine Control Module (ECM) for DTCs and refer to the relevant DTC Index ■ Using the manufacturer approved diagnostic system, carry out network integrity test ■ Refer to the electrical circuit diagrams and check Engine Control Module (ECM) power and ground circuits for open circuit ■ Check CAN harness between Speed Control Module (CCM) and Engine Control Module (ECM), repair as necessary
U0101-00	Lost Communication with TCM - No sub type information	**NOTE:** Adaptive Cruise Control (ACC) is disabled and Instrument Pack (IPC) displays warning message "Cruise Not Available" ■ CAN harness link between Speed Control Module (CCM)	■ Using the manufacturer approved diagnostic system, check Transmission Control Module (TCM) for DTCs and refer to the relevant DTC Index ■ Using the manufacturer approved diagnostic system, carry out network integrity test ■ Refer to the electrical circuit diagrams and check Transmission Control Module (TCM) power and ground circuits for open circuit ■ Check CAN harness between Speed Control Module (CCM) and Transmission Control Module (TCM), repair as necessary

		and Transmission Control Module (TCM) network malfunction ■ The Speed Control Module (CCM) has not received the expected CAN signal from the Transmission Control Module (TCM) within the specified time interval	
U0103-00	Lost Communication With Gear Shift Control Module A - No sub type information	**NOTE:** Adaptive Cruise Control (ACC) will function as normal ■ CAN harness link between Speed Control Module (CCM) and Gear Shift Control Module (GSM) network malfunction ■ The Speed Control Module (CCM) has not received the expected CAN signal from the Gear Shift Control Module (GSM) within the specified time interval	■ Using the manufacturer approved diagnostic system, check Gear Shift Control Module (GSM) for DTCs and refer to the relevant DTC Index ■ Using the manufacturer approved diagnostic system, carry out network integrity test ■ Refer to the electrical circuit diagrams and check Gear Shift Control Module (GSM) power and ground circuits for open circuit ■ Check CAN harness between Speed Control Module (CCM) and Gear Shift Control Module (GSM), repair as necessary
U0121-00	Lost Communication With Anti-Lock	**NOTE:**	■ Using the manufacturer approved diagnostic system, check Anti-Lock Brake System (ABS) Control Module for DTCs and refer to the relevant DTC Index

	Brake System (ABS) Control Module - No sub type information	Adaptive Cruise Control (ACC) is disabled and Instrument Pack (IPC) displays warning message "Cruise Not Available" ■ CAN harness link between Speed Control Module (CCM) and Anti-Lock Brake System (ABS) Control Module network malfunction ■ The Speed Control Module (CCM) has not received the expected CAN signal from the Anti-Lock Brake System (ABS) Control Module within the specified time interval	■ Using the manufacturer approved diagnostic system, carry out network integrity test ■ Refer to the electrical circuit diagrams and check Anti-Lock Brake System (ABS) Control Module power and ground circuits for open circuit ■ Check CAN harness between Speed Control Module (CCM) and Anti-Lock Brake System (ABS) Control Module, repair as necessary
U0128-00	Lost Communication With Park Brake Control Module - No sub type information	**NOTE:** Adaptive Cruise Control (ACC) is disabled and Instrument Pack (IPC) displays warning message "Cruise Not Available"	■ Using the manufacturer approved diagnostic system, check Parking Brake Module (PBM) for DTCs and refer to the relevant DTC Index ■ Using the manufacturer approved diagnostic system, carry out network integrity test ■ Refer to the electrical circuit diagrams and check Parking Brake Module (PBM) power and ground circuits for open circuit ■ Check CAN harness between Speed Control Module (CCM) and Parking Brake Module (PBM), repair as necessary

		■ CAN harness link between Speed Control Module (CCM) and Parking Brake Module (PBM) network malfunction ■ The Speed Control Module (CCM) has not received the expected CAN signal from the Parking Brake Module (PBM) within the specified time interval	
U0155-00	Lost Communication With Instrument Panel Cluster (IPC) Control Module - No sub type information	**NOTE:** Adaptive Cruise Control (ACC) is disabled and Instrument Pack (IPC) displays warning message "Cruise Not Available" ■ CAN harness link between Speed Control Module (CCM) and Instrument Cluster (IPC) network malfunction ■ The Speed Control Module (CCM) has not received the expected CAN signal from the Instrument Cluster (IPC) within the specified time interval	■ Using the manufacturer approved diagnostic system, check Instrument Cluster (IPC) for DTCs and refer to the relevant DTC Index ■ Using the manufacturer approved diagnostic system, carry out network integrity test ■ Refer to the electrical circuit diagrams and check Instrument Cluster (IPC) power and ground circuits for open circuit ■ Check CAN harness between Speed Control Module (CCM) and Instrument Cluster (IPC), repair as necessary

U0300-00	Internal Control Module Software Incompatibility - No sub type information	**NOTE:** Adaptive Cruise Control (ACC) is disabled and Instrument Pack (IPC) displays warning message "Cruise Not Available" ■ Car configuration signal not received ■ Car Configuration File (CCF) incorrect	■ Using the manufacturer approved diagnostic system check /amend the Car Configuration File (CCF)
U0300-55	Internal Control Module Software Incompatibility - Not configured	**NOTE:** Adaptive Cruise Control (ACC) is disabled and Instrument Pack (IPC) displays warning message "ACC not available. Module not configured" ■ Car configuration signal not received ■ Car Configuration File (CCF) incorrect	■ Using the manufacturer approved diagnostic system check /amend the Car Configuration File (CCF)

U0401-00	Invalid Data Received From ECM/PCM - No sub type information	**NOTE:** Adaptive Cruise Control (ACC) is disabled and Instrument Pack (IPC) displays warning message "Cruise Not Available" ■ The Engine Control Module (ECM) did not respond correctly to the ACC cancel request ■ The Engine Control Module (ECM) did not respond correctly to the ACC auto brake cancel request	■ Using the manufacturer approved diagnostic system, check Engine Control Module (ECM) for DTCs and refer to the relevant DTC Index
U0401-67	Invalid Data Received From ECM/PCM - Signal incorrect after event	**NOTE:** Adaptive Cruise Control (ACC) is disabled and Instrument Pack (IPC) displays warning message "Cruise Not Available" ■ The Engine Control Module (ECM) did not respond correctly to the ACC resume active request	■ Using the manufacturer approved diagnostic system, check Engine Control Module (ECM) for DTCs and refer to the relevant DTC Index

U0401-81	Invalid Data Received From ECM/PCM - Invalid serial data received	**NOTE:** Adaptive Cruise Control (ACC) is disabled and Instrument Pack (IPC) displays warning message "Cruise Not Available" ■ The Engine Control Module (ECM) has inhibited the Adaptive Cruise Control (ACC)	■ Using the manufacturer approved diagnostic system, check Engine Control Module (ECM) for DTCs and refer to the relevant DTC Index
U0415-53	Invalid Data Received From Anti-Lock Brake System (ABS) Control Module - Deactivated	**NOTE:** Adaptive Cruise Control (ACC) is disabled and Instrument Pack (IPC) displays warning message "Cruise Not Available" ■ Adaptive Cruise Control (ACC) is disabled due to Anti-Lock Brake System (ABS) error	■ Using the manufacturer approved diagnostic system, check Anti-Lock Brake System (ABS) Control Module for DTCs and refer to the relevant DTC Index

U0415-81	Invalid Data Received From Anti-Lock Brake System Control Module - Invalid serial data received	**NOTE:** Adaptive Cruise Control (ACC) is disabled and Instrument Pack (IPC) displays warning message "Cruise Not Available" ■ The Anti-Lock Brake System (ABS) Control Module has inhibited the Adaptive Cruise Control (ACC)	■ Using the manufacturer approved diagnostic system, check Anti-Lock Brake System (ABS) Control Module for DTCs and refer to the relevant DTC Index
U0417-67	Invalid Data Received From Park Brake Control Module - Signal incorrect after event	**NOTE:** Adaptive Cruise Control (ACC) is disabled and Instrument Pack (IPC) displays warning message "Cruise Not Available" ■ The Parking Brake Module (PBM) did not respond correctly to the ACC EPB apply request	■ Using the manufacturer approved diagnostic system, check Parking Brake Module (PBM) for DTCs and refer to the relevant DTC Index
U0417-81	Invalid Data Received From	**NOTE:**	

	Park Brake Control Module - Invalid serial data received	Adaptive Cruise Control (ACC) is disabled and Instrument Pack (IPC) displays warning message "Cruise Not Available" ■ The Parking Brake Module (PBM) has inhibited the Adaptive Cruise Control (ACC)	■ Using the manufacturer approved diagnostic system, check Parking Brake Module (PBM) for DTCs and refer to the relevant DTC Index
U0418-68	Invalid Data Received From Brake System Control Module - Event information	△ NOTE: Instrument Pack (IPC) displays warning message "CMbB disabled and Forward Alert Not Available" ■ Signal message error received over CAN	■ Using the manufacturer approved diagnostic system, check Anti-Lock Brake System (ABS) Control Module for DTCs and refer to the relevant DTC Index
U0421-81	Invalid Data Received from Suspension Control Module A - Invalid serial data received	△ NOTE: Adaptive Cruise Control (ACC) is disabled and Instrument Pack (IPC)	■ Using the manufacturer approved diagnostic system, check Air Suspension Control Module (RLM) for DTCs and refer to the relevant DTC Index

		displays warning message "Cruise Not Available" ■ The Air Suspension Control Module (RLM) has inhibited the Adaptive Cruise Control (ACC)	
U0423-81	Invalid Data Received From Instrument Panel Control Module - Invalid serial data received	**NOTE:** Adaptive Cruise Control (ACC) is disabled and Instrument Pack (IPC) displays warning message "Cruise Not Available" ■ The Instrument Cluster (IPC) has inhibited the Adaptive Cruise Control (ACC) ■ Central Junction Box (CJB) missing or not updated CAN message	■ Using the manufacturer approved diagnostic system, check Instrument Cluster (IPC) for DTCs and refer to the relevant DTC Index
U1A00-88	Private Communication Network - Bus off	**NOTE:** Adaptive Cruise Control (ACC) is disabled and	■ The Speed Control Module (CCM) setting this code has disabled CAN transmission ■ Using the manufacturer approved diagnostic system, check for other bus off codes

		Instrument Pack (IPC) displays warning message "Cruise Not Available" ■ Speed Control Module (CCM) indicates bus off, on private CAN bus	■ Refer to the electrical circuit diagrams and check the Speed Control Module (CCM) and circuits ■ Clear all DTCs and road test the vehicle ■ If the concern reoccurs contact Dealer Technical Support for further advice. Under no circumstance should any parts be replaced to overcome this issue
U1A14-49	CAN Initialisation Failure - Internal electronic failure	**NOTE:** Adaptive Cruise Control (ACC) is disabled and Instrument Pack (IPC) displays warning message "Cruise Not Available" ■ Harness Fault - CAN circuit fault	■ Using the manufacturer approved diagnostic system, complete a CAN network integrity test ■ Refer to the electrical circuit diagrams and check the power and ground connections to the Speed Control Module (CCM) ■ Refer to the electrical circuit diagrams and check the CAN network
U2101-00	Control Module Configuration Incompatible - No sub type information	**NOTE:** Adaptive Cruise Control (ACC) is disabled and Instrument Pack (IPC) displays warning message "Cruise Not Available"	■ Using the manufacturer approved diagnostic system check /amend the Car Configuration File (CCF)

		■ Car Configuration File (CCF) mis-match	
U3000-41	Control Module - General checksum failure	**NOTE:** Adaptive Cruise Control (ACC) is disabled and Instrument Pack (IPC) displays warning message "Cruise Not Available" ■ Speed Control Module (CCM) internal micro controller error	■ Using the manufacturer approved diagnostic system clear the DTC and retest ■ If the DTC remains check and install Speed Control Module (CCM) as required. Refer to the Warranty Policy and Procedures manual, or determine if any prior approval programme is in operation, prior to the installation of a new module/component
U3000-42	Control Module - General memory failure	**NOTE:** Adaptive Cruise Control (ACC) is disabled and Instrument Pack (IPC) displays warning message "Cruise Not Available" ■ Speed Control Module (CCM) internal RAM test error	■ Using the manufacturer approved diagnostic system clear the DTC and retest ■ If the DTC remains check and install Speed Control Module (CCM) as required. Refer to the Warranty Policy and Procedures manual, or determine if any prior approval programme is in operation, prior to the installation of a new module/component
U3000-	Control Module		

44	data - Memory failure	**NOTE:** Adaptive Cruise Control (ACC) is disabled and Instrument Pack (IPC) displays warning message "Cruise Not Available" ■ Speed Control Module (CCM) internal DSP RAM test error	■ Using the manufacturer approved diagnostic system clear the DTC and retest ■ If the DTC remains check and install Speed Control Module (CCM) as required. Refer to the Warranty Policy and Procedures manual, or determine if any prior approval programme is in operation, prior to the installation of a new module/component
U3000-49	Control Module - Internal electronic failure	**NOTE:** Adaptive Cruise Control (ACC) is disabled and Instrument Pack (IPC) displays warning message "Cruise Not Available" ■ Speed Control Module (CCM) internal clock error	■ Using the manufacturer approved diagnostic system clear the DTC and retest ■ If the DTC remains check and install Speed Control Module (CCM) as required. Refer to the Warranty Policy and Procedures manual, or determine if any prior approval programme is in operation, prior to the installation of a new module/component
U3000-63	Control Module - Circuit / component protection time-out	**NOTE:** Instrument Pack (IPC) displays warning message "CMbB	■ Using the manufacturer approved diagnostic system, check for related DTCs and refer to the relevant DTC Index ■ Using the manufacturer approved diagnostic system clear the DTC and retest

		disabled and Forward Alert Not Available" ■ Speed Control Module (CCM) internal protection has been activated	■ If the DTC remains check and install Speed Control Module (CCM) as required. Refer to the Warranty Policy and Procedures manual, or determine if any prior approval programme is in operation, prior to the installation of a new module/component.
U3000-96	Control Module - Component internal failure	△ NOTE: Adaptive Cruise Control (ACC) is disabled and Instrument Pack (IPC) displays warning message "Cruise Not Available" ■ Speed Control Module (CCM) hardware ID mismatch	■ Using the manufacturer approved diagnostic system, check for related DTCs and refer to the relevant DTC Index ■ Using the manufacturer approved diagnostic system clear the DTC and retest ■ If the concern reoccurs contact Dealer Technical Support (DTS)
U3003-16	Battery Voltage - Circuit voltage below threshold	△ NOTE: Adaptive Cruise Control (ACC) is disabled and Instrument Pack (IPC) displays warning message "Cruise Not Available"	■ Using the manufacturer approved diagnostic system check the value of Datalogger signal ECU Power Supply Voltage (0xD112) ■ Refer to the relevant section of the workshop manual and check vehicle battery and charging system ■ Refer to the electrical circuit diagrams and check the power and ground connections to the Speed Control Module (CCM)

		■ Power supply voltage to the Speed Control Module (CCM) is lower than expected	
U3003-17	Battery Voltage - Circuit voltage above threshold	**NOTE:** Adaptive Cruise Control (ACC) is disabled and Instrument Pack (IPC) displays warning message "Cruise Not Available" ■ Power supply voltage to the Speed Control Module (CCM) is higher than expected	■ Using the manufacturer approved diagnostic system check the value of Datalogger signal ECU Power Supply Voltage (0xD112) ■ Refer to the relevant section of the workshop manual and check vehicle battery and charging system for overcharging
U3003-62	Battery Voltage - Signal compare failure	**NOTE:** Adaptive Cruise Control (ACC) is disabled and Instrument Pack (IPC) displays warning message "Cruise Not Available" ■ Power supply voltage to the Speed Control Module (CCM) is lower than main ECU voltage reported on CAN	■ Using the manufacturer approved diagnostic system check the value of Datalogger signal ECU Power Supply Voltage (0xD112) ■ Refer to the electrical circuit diagrams and check the power and ground connections to the Speed Control Module (CCM)



2012.0 RANGE ROVER (LM), 100-00

GENERAL INFORMATION

DESCRIPTION AND OPERATION

STEERING ANGLE SENSOR MODULE (SASM)

CAUTION:

Diagnosis by substitution from a donor vehicle is **NOT** acceptable. Substitution of control modules does not guarantee confirmation of a fault, and may also cause additional faults in the vehicle being tested and/or the donor vehicle

NOTES:

- If the control module or a component is suspect and the vehicle remains under manufacturer warranty, refer to the warranty policy and procedures manual, or determine if any prior approval programme is in operation, prior to the installation of a new module/component
- Generic scan tools may not read the codes listed, or may read only 5-digit codes. Match the 5 digits from the scan tool to the first 5 digits of the 7-digit code listed to identify the fault (the last 2 digits give extra information read by the manufacturer-approved diagnostic system)
- When performing voltage or resistance tests, always use a digital multimeter accurate to three decimal places and with a current calibration certificate. When testing resistance, always take the resistance of the digital multimeter leads into account
- Check and rectify basic faults before beginning diagnostic routines involving pinpoint tests
- Inspect connectors for signs of water ingress, and pins for damage and/or corrosion
- If diagnostic trouble codes are recorded and, after performing the pinpoint tests, a fault is not present, an intermittent concern may be the cause. Always check for loose connections and corroded terminals
- Where an 'on demand self-test' is referred to, this can be accessed via the 'diagnostic trouble code monitor' tab on the manufacturers approved diagnostic system
- Check DDW for open campaigns. Refer to the corresponding bulletins and SSMs which may be valid for the specific customer complaint and carry out the recommendations as required

The table below lists all Diagnostic Trouble Codes (DTC's) that could be logged in the Steering Angle Sensor Module, for additional Diagnosis and Testing information refer to the relevant Diagnosis and Testing Section. For additional information, refer to: Steering System (211-00, Diagnosis and Testing).

DTC	DESCRIPTION	POSSIBLE CAUSES	ACTION
C0051-04	Steering wheel position sensor - System internal failures	■ System internal failure ■ Harness/connector issue	■ Refer to the electrical circuit diagrams and check the steering angle sensor connector and circuits. Check the sensor calibration using the approved diagnostic/calibration system before renewing the sensor
C0051-62	Steering wheel position sensor - Signal compare failure	■ Signal compare failure ■ Harness/connector issue	■ Refer to the electrical circuit diagrams and check the steering angle sensor connector and circuits. Check the sensor calibration using the approved diagnostic/calibration system
C0051-64	Steering wheel position sensor - Signal plausibility failure	■ Signal plausibility failure ■ Harness/connector issue	■ Refer to the electrical circuit diagrams and check the steering angle sensor, connector and circuits. Check the sensor calibration using the approved diagnostic/calibration system
U0001-88	High speed CAN communication bus - Bus off	■ CAN bus off	■ Refer to the electrical circuit diagrams and check the power and ground connections to the module. Using the manufacturer approved diagnostic system, complete a CAN network integrity test. Refer to the electrical circuit diagrams and check the CAN network
U0122-00	Lost communication with vehicle	■ Lost Communication	■ Refer to the electrical circuit diagrams and check the power and ground supplies to vehicle dynamics control module. Check CAN network between steering angle sensor Module and vehicle dynamics control

	dynamics control module - No sub type information		module. Alternatively, using the manufacturer approved diagnostic system, complete a CAN network integrity test
U0140-00	Lost communication with body control module - No sub type information	■ Lost Communication	■ Refer to the electrical circuit diagrams and check the power and ground supplies to body control module. Check CAN network between steering angle sensor module and body control module. Alternatively, using the manufacturer approved diagnostic system, complete a CAN network integrity test
U0300-55	Internal control module software incompatibility - Not configured	■ Connector or connection failure ■ CAN hardware failure ■ CAN configuration failure - The module has failed to recognize the correct Master Configuration ID ■ Indicates that an internal software mismatch has occurred	■ Configure the modules using the approved diagnostic/calibration system. Refer to the network communications section of the workshop manual
U1A14-49	CAN initialization failure - Internal electronic failure	■ Steering angle sensor module internal CAN controller failure	■ Renew the steering angle sensor module. Refer to the warranty policy and procedures manual if a module is suspect
U3002-62	Vehicle identification	■ Mismatch between received VIN and	■ Program the module using the approved diagnostic/calibration system

	number - Signal compare failure	stored VIN in steering angle sensor	

GENERAL INFORMATION

DESCRIPTION AND OPERATION

STEERING COLUMN LOCK MODULE (VIM)

CAUTION:

Diagnosis by substitution from a donor vehicle is **NOT** acceptable. Substitution of control modules does not guarantee confirmation of a fault, and may also cause additional faults in the vehicle being tested and/or the donor vehicle

NOTES:

- If the control module or a component is suspect and the vehicle remains under manufacturer warranty, refer to the warranty policy and procedures manual, or determine if any prior approval programme is in operation, prior to the installation of a new module/component
- Generic scan tools may not read the codes listed, or may read only 5-digit codes. Match the 5 digits from the scan tool to the first 5 digits of the 7-digit code listed to identify the fault (the last 2 digits give extra information read by the manufacturer-approved diagnostic system)
- When performing voltage or resistance tests, always use a digital multimeter accurate to three decimal places and with a current calibration certificate. When testing resistance, always take the resistance of the digital multimeter leads into account
- Check and rectify basic faults before beginning diagnostic routines involving pinpoint tests
- Inspect connectors for signs of water ingress, and pins for damage and/or corrosion
- If diagnostic trouble codes are recorded and, after performing the pinpoint tests, a fault is not present, an intermittent concern may be the cause. Always check for loose connections and corroded terminals
- Where an 'on demand self-test' is referred to, this can be accessed via the 'diagnostic trouble code monitor' tab on the manufacturers approved diagnostic system
- Check DDW for open campaigns. Refer to the corresponding bulletins and SSMs which may be valid for the specific customer complaint and carry out the recommendations as required

The table below lists all Diagnostic Trouble Codes (DTCs) that could be logged in the Steering Column Lock Module, for additional Diagnosis and Testing information refer to the relevant Diagnosis and Testing Section. For additional information, refer to: Steering Column (211-04, Diagnosis and Testing).

DTC	DESCRIPTION	POSSIBLE CAUSES	ACTION
B100D-16	Column Lock Authorisation - Circuit voltage below threshold	■ Circuit voltage below threshold ■ Harness /connector issue	■ Check for other related DTCs from other modules and rectify first. Refer to the electrical circuit diagrams and check connectivity to Steering Column Lock. Refer to the electrical circuit diagrams and check the ignition power supply circuit to the Steering Column Lock. Complete a CAN network integrity test using the manufacturers approved diagnostic system
B100D-29	Column Lock Authorisation - Signal invalid	■ Unlock or lock sensor invalid	■ Clear the DTC, perform an on demand self-test and retest. If the problem persists, renew the Steering Column Lock. Refer to the warranty policy and procedures manual if a module is suspect
B100D-42	Column Lock Authorisation - General memory failure	■ Module general memory failure	■ Clear the DTC. Complete a CAN network integrity test using the manufacturers approved diagnostic system. Perform an on demand self-test and retest. If the problem persists, renew the Steering Column Lock. Refer to the warranty policy and procedures manual if a module is suspect
B100D-51	Column Lock Authorisation - Not programmed	■ Module not programmed	■ Configure the Steering Column Lock Module using the manufacturers approved diagnostic system
B100D-62	Column Lock Authorisation - Signal compare	■ Signal compare failure	

	failure	■ This DTC will be logged if the encrypted data exchange does not match between Steering Column Lock and the Central Junction Box	■ Configure the modules using the manufacturers approved diagnostic system. If the problem persists, complete a CAN network integrity test using the manufacturers approved diagnostic system. Perform an on demand self-test and retest
B100D-64	Column Lock Authorisation - Signal plausibility failure	■ Signal plausibility failure ■ Steering Column Lock unable to perform lock action ■ CAN Network fault ■ Anti-lock Braking System, Engine Control Module,	**NOTE:** Prior to clearing this DTC, carry out the Vehicle Functional Reset application using the manufacturer approved diagnostic system ■ Check the serviceability of the steering column and lock. Clear the DTC and retest. If the problem persists, carry out CAN Network Integrity Test and Module Self Test using the manufacturer approved diagnostic system. Alternatively, refer to the electrical circuit diagrams and check CAN Network

		Central Junction Box fault	
B100D-72	Column Lock Authorisation - Actuator stuck open	▪ Actuator stuck open ▪ Steering Column Lock unable to reach locked state	▪ Clear the DTC. Ensure the vehicle battery supply voltage is between 9-16 Volts. Complete a CAN network integrity test using the manufacturers approved diagnostic system. Perform an on demand self-test and retest. If the problem persists, renew the Steering Column Lock. Refer to the warranty policy and procedures manual if a module is suspect
B100D-73	Column Lock Authorisation - Actuator stuck closed	▪ Actuator stuck closed ▪ Steering Column Lock unable to reach unlocked state	▪ Clear the DTC. Ensure the vehicle battery supply voltage is between 9-16 Volts. Ensure the column lock bolt movement is not obstructed or restricted (the parked position of the road wheels may be exerting a turning force through the steering column, preventing the lock from releasing. The steering wheel may need to be held against the force to allow the column lock to release). Complete a CAN network integrity test using the manufacturers approved diagnostic system. Perform an on demand self-test and retest. If the problem persists, renew the Steering Column Lock. Refer to the warranty policy and procedures manual if a module is suspect
B100D-77	Column Lock Authorisation - Commanded position not reachable	▪ Commanded position not reachable ▪ Steering Column Lock unable to reach	▪ Clear the DTC. Ensure the vehicle battery supply voltage is between 9-16 Volts. Ensure the column lock bolt movement is not obstructed or restricted (the parked position of the road wheels may be exerting a turning force through the steering column, preventing the lock from releasing. The steering wheel may need to be held against the force to allow the column lock to release). Complete a CAN network integrity test using the manufacturers approved diagnostic system. Perform an on demand self-test and retest. If the problem persists, renew the Steering Column Lock. Refer to the warranty policy and procedures manual if a module is suspect

		unlocked or locked state	
B100D-92	Column Lock Authorisation - Performance or incorrect operation	■ Steering Column Lock performance or incorrect operation	■ Clear the DTC. Ensure the vehicle battery supply voltage is between 9-16 Volts. Ensure the column lock bolt movement is not obstructed or restricted (the parked position of the road wheels may be exerting a turning force through the steering column, preventing the lock from releasing. The steering wheel may need to be held against the force to allow the column lock to release). Complete a CAN network integrity test using the manufacturers approved diagnostic system. Perform an on demand self-test and retest. If the problem persists, renew the Steering Column Lock. Refer to the warranty policy and procedures manual if a module is suspect
B100D-94	Column Lock Authorisation - Unexpected operation	■ Steering Column Lock unexpected operation	■ Clear the DTC. Ensure the vehicle battery supply voltage is between 9-16 Volts. Ensure the column lock bolt movement is not obstructed or restricted (the parked position of the road wheels may be exerting a turning force through the steering column, preventing the lock from releasing. The steering wheel may need to be held against the force to allow the column lock to release). Complete a CAN network integrity test using the manufacturers approved diagnostic system. Perform an on demand self-test and retest. If the problem persists, renew the Steering Column Lock. Refer to the warranty policy and procedures manual if a module is suspect
B100D-96	Column Lock Authorisation - Component internal failure	■ Component internal failure ■ Battery voltage too low ■ Torque load on Steering column	△ **NOTE:** Prior to clearing this DTC, carry out the Vehicle Functional Reset application using the manufacturer approved diagnostic system ■ Clear the DTC and retest. Check steering is not under high side load. Refer to the electrical circuit diagrams and check Steering Column Lock circuits. Carry

			out CAN Network Integrity Test and Module Self Test using the manufacturer approved diagnostic system. If the problem persists, renew the Steering Column Lock Module. Refer to the warranty policy and procedures manual if a module is suspect
U0001-88	High Speed CAN Communication Bus - Bus off	■ Bus off	■ Refer to the electrical circuit diagrams and check the power and ground connections to the module. Using the manufacturer approved diagnostic system, complete a CAN network integrity test. Refer to the electrical circuit diagrams and check the CAN network
U0300-00	Internal Control Module Software Incompatibility - No sub type information	■ No sub type information	■ Refer to network communication section of the workshop manual. Clear the DTC and ensure the vehicle battery supply voltage is between 9-16 Volts. Using the manufacturers approved diagnostic system, complete a CAN integrity test. Perform an on demand self-test and retest
U3002-81	Vehicle Identification Number - Invalid serial data received	■ Invalid vehicle identification number	■ Confirm the correct VIN details are stored in Steering Column Lock using the approved diagnostic system

2012.0 RANGE ROVER (LM), 100-00

GENERAL INFORMATION

DESCRIPTION AND OPERATION

TELEVISION MODULE (TVM)

CAUTION:

Diagnosis by substitution from a donor vehicle is **NOT** acceptable. Substitution of control modules does not guarantee confirmation of a fault, and may also cause additional faults in the vehicle being tested and/or the donor vehicle

NOTES:

- If the control module or a component is suspect and the vehicle remains under manufacturer warranty, refer to the warranty policy and procedures manual, or determine if any prior approval programme is in operation, prior to the installation of a new module/component
- Generic scan tools may not read the codes listed, or may read only 5-digit codes. Match the 5 digits from the scan tool to the first 5 digits of the 7-digit code listed to identify the fault (the last 2 digits give extra information read by the manufacturer-approved diagnostic system)
- When performing voltage or resistance tests, always use a digital multimeter accurate to three decimal places and with a current calibration certificate. When testing resistance, always take the resistance of the digital multimeter leads into account
- Check and rectify basic faults before beginning diagnostic routines involving pinpoint tests
- Inspect connectors for signs of water ingress, and pins for damage and/or corrosion
- If diagnostic trouble codes are recorded and, after performing the pinpoint tests, a fault is not present, an intermittent concern may be the cause. Always check for loose connections and corroded terminals
- Where an 'on demand self-test' is referred to, this can be accessed via the 'diagnostic trouble code monitor' tab on the manufacturers approved diagnostic system
- Check DDW for open campaigns. Refer to the corresponding bulletins and SSMs which may be valid for the specific customer complaint and carry out the recommendations as required

The table below lists all Diagnostic Trouble Codes (DTCs) that could be logged in the Television Module, for additional Diagnosis and Testing information refer to the relevant Diagnosis and Testing Section. For additional information, refer to: Information and Entertainment System (415-00 Information and Entertainment System - General Information, Diagnosis and Testing).

DTC	DESCRIPTION	POSSIBLE CAUSES	ACTION
B1A00-16	Control Module - Circuit voltage below threshold	■ Control module circuit voltage below threshold: ■ Voltage less than (master control module voltage - 2V) for >10 seconds ■ Battery voltage low ■ Control module circuit High resistance	■ Check the battery condition and state of charge. Refer to the relevant section of the workshop manual. Check the module power and ground circuits. Refer to the electrical circuit diagrams
B1A00-17	Control Module - Circuit voltage above threshold	■ Control module circuit voltage above threshold ■ Battery voltage high (overcharging) ■ Control module circuit short circuit to power	■ Check the battery condition and state of charge. Refer to the relevant section of the workshop manual. Check the module power and ground circuits. Refer to the electrical circuit diagrams
B1A00-48	Control Module - Supervision software failure	■ Control module supervision software fault	■ Where available, configure the module using the approved diagnostic system. Refer to the warranty policy and procedures manual if a module is suspect

B1A00-49	Control Module - Internal electronic failure	■ Control module hardware fault	■ Renew the module. Refer to the warranty policy and procedures manual and renew the module
B1A56-11	Antenna - Circuit short to ground	■ Antenna circuit short circuit to ground	■ Refer to the electrical circuit diagrams and check the antenna circuit. Where possible, refer to the guided diagnostic routine for this code on the approved diagnostic system
B1A56-12	Antenna - Circuit short to battery	■ Antenna circuit short circuit to power	■ Refer to the electrical circuit diagrams and check the antenna circuit. Where possible, refer to the guided diagnostic routine for this code on the approved diagnostic system
B1A56-13	Antenna - Circuit open	■ Antenna circuit high resistance	■ Refer to the electrical circuit diagrams and check the antenna circuit. Where possible, refer to the guided diagnostic routine for this code on the approved diagnostic system
B1D55-11	Antenna #2 - Circuit short to ground	■ Antenna 2 circuit short circuit to ground	■ Check the antenna and circuits. Refer to the electrical circuit diagrams
B1D55-12	Antenna #2 - Circuit short to battery	■ Antenna 2 circuit short circuit to power	■ Check the antenna and circuits. Refer to the electrical circuit diagrams
B1D55-13	Antenna #2 - Circuit open	■ Antenna 2 circuit High resistance	■ Check the antenna and circuits. Refer to the electrical circuit diagrams
B1D56-11	Antenna #3 Circuit - Circuit short to ground	■ Antenna 3 circuit short circuit to ground	■ Check the antenna and circuits. Refer to the electrical circuit diagrams
B1D56-	Antenna #3		

12	Circuit - Circuit short to battery	■ Antenna 3 circuit short circuit to power	■ Check the antenna and circuits. Refer to the electrical circuit diagrams
B1D56-13	Antenna #3 Circuit - Circuit open	■ Antenna 3 circuit High resistance	■ Check the antenna and circuits. Refer to the electrical circuit diagrams
B1D57-11	Antenna #4 Circuit - Circuit short to ground	■ Antenna 4 circuit short circuit to ground	■ Check the antenna and circuits. Refer to the electrical circuit diagrams
B1D57-12	Antenna #4 Circuit - Circuit short to battery	■ Antenna 4 circuit short circuit to power	■ Check the antenna and circuits. Refer to the electrical circuit diagrams
B1D57-13	Antenna #4 Circuit - Circuit open	■ Antenna 4 circuit High resistance	■ Check the antenna and circuits. Refer to the electrical circuit diagrams
B1D58-11	Television Output - Circuit short to ground	■ Television output circuit short circuit to ground	■ Check the television output circuits. Refer to the electrical circuit diagrams
B1D58-12	Television Output - Circuit short to battery	■ Television output circuit short circuit to power	■ Check the television output circuits. Refer to the electrical circuit diagrams
B1D58-13	Television Output - Circuit open	■ Television output circuit High resistance	■ Check the television output circuits. Refer to the electrical circuit diagrams
U1A20-87	Incomplete MOST Ring Reported By	■ No signal from the TV module (TVM)	■ Carry out the general media orientated system transport (MOST) test. Refer to the Network Communications section of the

	TVM - Missing message	■ Fibre optic ring break condition reported	workshop manual and in the approved diagnostic system, where available

2012.0 RANGE ROVER (LM), 100-00

GENERAL INFORMATION

DESCRIPTION AND OPERATION

TERRAIN RESPONSE CONTROL MODULE (ATCM)

CAUTION:

Diagnosis by substitution from a donor vehicle is **NOT** acceptable. Substitution of control modules does not guarantee confirmation of a fault, and may also cause additional faults in the vehicle being tested and/or the donor vehicle

NOTES:

- If the control module or a component is suspect and the vehicle remains under manufacturer warranty, refer to the warranty policy and procedures manual, or determine if any prior approval programme is in operation, prior to the installation of a new module/component
- Generic scan tools may not read the codes listed, or may read only 5-digit codes. Match the 5 digits from the scan tool to the first 5 digits of the 7-digit code listed to identify the fault (the last 2 digits give extra information read by the manufacturer-approved diagnostic system)
- When performing voltage or resistance tests, always use a digital multimeter accurate to three decimal places and with a current calibration certificate. When testing resistance, always take the resistance of the digital multimeter leads into account
- Check and rectify basic faults before beginning diagnostic routines involving pinpoint tests
- Inspect connectors for signs of water ingress, and pins for damage and/or corrosion
- If diagnostic trouble codes are recorded and, after performing the pinpoint tests, a fault is not present, an intermittent concern may be the cause. Always check for loose connections and corroded terminals
- Where an 'on demand self-test' is referred to, this can be accessed via the 'diagnostic trouble code monitor' tab on the manufacturers approved diagnostic system
- Check DDW for open campaigns. Refer to the corresponding bulletins and SSMs which may be valid for the specific customer complaint and carry out the recommendations as required

The table below lists all Diagnostic Trouble Codes (DTCs) that could be logged in the All Terrain Control Module, for additional Diagnosis and Testing information refer to the relevant Diagnosis and Testing Section. For additional information, refer to: Ride and Handling Optimization (204-06 Ride and Handling Optimization, Diagnosis and Testing).

DTC	DESCRIPTION	POSSIBLE CAUSES	ACTION
C1A00-46	Control Module - Calibration /parameter memory failure	■ The terrain response control module has indicated a calibration /parameter memory failure for embedded systems using FLASH memory. This is equivalent to EEPROM in RAM/ROM /EEPROM embedded systems ■ Corruption in the non-volatile memory storage system (EEPROM) in the Terrain response control module	■ Rectify this DTC before attempting to rectify others. Record all DTCs logged and clear them. With ignition on select a terrain response special program, turn off the ignition, then turn back on the ignition and verify the selected special program is still active. If the selected terrain response special program is still not active and has returned to the general program, confirm if DTC has returned. Repeat procedure again once more. If DTC is still present install a new terrain response rotary control switch and control module. Refer to the warranty policy and procedures manual if a module is suspect
C1A01-96	LED - Component		NOTE:

	internal failure	■ LED circuit short circuit to ground or open circuit	NOTE: If the system is in 'failsafe default mode due to another issue no LEDs will illuminate. This fault does not cause the system to go to 'failsafe default' ■ Refer to the Description and Operation section of workshop manual. Check terrain response system, special program LEDs. One or more of the LEDs is suspected of not illuminating as appropriate. With the engine running move the terrain response rotary control switch through all five programmes and confirm the appropriate special program LED does not illuminate when the terrain response rotary control switch is in that position. Suspect the terrain response rotary control switch and control module, check and install a new terrain response rotary control switch and control module as required. Refer to the warranty policy and procedures manual if a module is suspect
C1A02-94	Rotary Encoder Stuck In Intermediate Position - Unexpected operation	■ The terrain response rotary control switch is held in an intermediate position (between the special programmes) for more than 60 seconds ■ Foreign object preventing correct operation of terrain response rotary control switch	NOTE: Suspect driver error do not replace the terrain response rotary control at this time ■ Check for foreign object preventing correct operation of terrain response rotary control. Start the vehicle engine, rotate the terrain response rotary control until it has located a genuine detent, wait 60 seconds. Stop the vehicle engine, clear the DTC and retest

		■ Mechanical damage to the terrain response rotary control switch	
U0001-88	High Speed CAN Communication Bus Off - Bus off	■ Bus off. The Terrain response control module has detected the data bus is not available ■ CAN bus short circuit to ground, power or open circuit ■ Failure of another control module on the CAN bus	■ Refer to the electrical circuit diagrams and check the power and ground connections to the module. Using the manufacturer approved diagnostic system, complete a CAN network integrity test. Refer to the electrical circuit diagrams and check the CAN network
U0100-00	Lost Communication With The ECM /PCM 'A' - No sub type information	■ The Terrain response control module has not received one or more expected messages from the Engine Control Module ■ Engine Control Module power circuit open circuit	■ Using the manufacturer approved diagnostic system, check the Engine Control Module for DTCs and refer to the relevant DTC index. Using the manufacturer approved diagnostic system, carry out network integrity test. Using the manufacturer approved diagnostic system, re-configure the Engine Control Module. Refer to electrical circuit diagrams check the power and ground connections to Engine Control Module. Check the high speed CAN low and CAN high circuits, repair as necessary. Clear the DTC and retest. If the problem persists, suspect the Engine Control Module. Refer to the warranty policy and procedures manual if a module is suspect. Check the system is operating correctly and the DTC does not return

		■ Engine Control Module ground circuit open circuit ■ High speed CAN circuit communications failure ■ Engine Control Module disconnected from the high speed CAN communication bus ■ Engine Control Module disconnected from the high speed CAN communication bus ■ Engine Control Module high speed CAN Low circuit open circuit ■ Engine Control Module not configured ■ Engine Control Module failure	

	U0101-00	Lost Communication With The TCM - No sub type information	■ The Terrain response control module has not received one or more expected messages from the Transmission Control Module ■ High speed CAN circuit communications failure ■ Transmission Control Module power circuit open circuit ■ Transmission Control Module ground circuit open circuit ■ Transmission Control Module disconnected from the high speed CAN communication bus ■ Transmission Control Module disconnected from the high speed CAN communication bus	■ Using the manufacturer approved diagnostic system, check the Transmission Control Module for DTCs and refer to the relevant DTC index. Using the manufacturer approved diagnostic system, carry out network integrity test. Using the manufacturer approved diagnostic system, re-configure the Transmission Control Module. Refer to electrical circuit diagrams check the power and ground connections to Transmission Control Module. Check the high speed CAN low and CAN high circuits, repair as necessary. Clear the DTC and retest. If the problem persists, suspect the Transmission Control Module. Refer to the warranty policy and procedures manual if a module is suspect. Check the system is operating correctly and the DTC does not return	

			■ Transmission Control Module high speed CAN Low circuit open circuit ■ Transmission Control Module not configured ■ Transmission Control Module failure	
	U0102-00	Lost Communication With The Transfer Case Control Module - No sub type information	■ The Terrain response control module has not received one or more expected messages from the Transfer Case Control Module ■ High speed CAN circuit communications failure ■ Transfer Case Control Module power circuit open circuit ■ Transfer Case Control Module ground circuit open circuit	■ Using the manufacturer approved diagnostic system, check the Transfer Case Control Module for DTCs and refer to the relevant DTC index. Using the manufacturer approved diagnostic system, carry out network integrity test. Using the manufacturer approved diagnostic system, re-configure the Transfer Case Control Module. Refer to electrical circuit diagrams check the power and ground connections to Transfer Case Control Module. Check the high speed CAN low and CAN high circuits, repair as necessary. Clear the DTC and retest. If the problem persists, suspect the Transfer Case Control Module. Refer to the warranty policy and procedures manual if a module is suspect. Check the system is operating correctly and the DTC does not return

			■ Transfer Case Control Module disconnected from the high speed CAN communication bus ■ Transfer Case Control Module high speed CAN Low circuit open circuit ■ Transfer Case Control Module high speed CAN High circuit open circuit ■ Transfer Case Control Module not configured ■ Transfer Case Control Module failure	
U0121-00	Lost Communication With Anti-Lock Brake System (ABS) Control Module - No sub type information	■ The Terrain response control module has not received one or more expected messages from the ABS Control Module	■ Using the manufacturer approved diagnostic system, check the ABS Control Module for DTCs and refer to the relevant DTC index. Using the manufacturer approved diagnostic system, carry out network integrity test. Using the manufacturer approved diagnostic system, re-configure the ABS Control Module. Refer to electrical circuit diagrams check the power and ground connections to ABS Control Module. Check the high speed CAN low and CAN high circuits, repair as necessary. Clear the DTC and retest. If the	

			■ High speed CAN circuit communications failure ■ ABS Control Module power circuit open circuit ■ ABS Control Module ground circuit open circuit ■ ABS Control Module disconnected from the high speed CAN communication bus ■ ABS Control Module high speed CAN Low circuit open circuit ■ ABS Control Module high speed CAN High circuit open circuit ■ ABS Control Module not configured	problem persists, suspect the ABS Control Module. Refer to the warranty policy and procedures manual if a module is suspect. Check the system is operating correctly and the DTC does not return	

		■ ABS Control Module failure	
U0132-00	Lost Communication With Suspension Control Module 'A' - No sub type information	■ The Terrain response control module has not received one or more expected messages from the Suspension Control Module (Ride Level Module) ■ High speed CAN circuit communications failure ■ Suspension Control Module power circuit open circuit ■ Suspension Control Module ground circuit open circuit ■ Suspension Control Module disconnected from the high speed CAN communication bus	■ Using the manufacturer approved diagnostic system, check the Suspension Control Module for DTCs and refer to the relevant DTC index. Using the manufacturer approved diagnostic system, carry out network integrity test. Using the manufacturer approved diagnostic system, re-configure the Suspension Control Module. Refer to electrical circuit diagrams check the power and ground connections to Suspension Control Module. Check the high speed CAN low and CAN high circuits, repair as necessary. Clear the DTC and retest. If the problem persists, suspect the Suspension Control Module. Refer to the warranty policy and procedures manual if a module is suspect. Check the system is operating correctly and the DTC does not return

			■ Suspension Control Module high speed CAN Low circuit open circuit ■ Suspension Control Module high speed CAN High circuit open circuit ■ Suspension Control Module not configured ■ Suspension Control Module failure	
	U0139-00	Lost Communication With Suspension Control Module 'B' - No sub type information	■ The Terrain response control module has not received one or more expected messages from the Suspension Control Module (Continuously Variable Dampening) ■ High speed CAN circuit communications failure	■ Using the manufacturer approved diagnostic system, check the Suspension Control Module for DTCs and refer to the relevant DTC index. Using the manufacturer approved diagnostic system, carry out network integrity test. Using the manufacturer approved diagnostic system, re-configure the Suspension Control Module. Refer to electrical circuit diagrams check the power and ground connections to Suspension Control Module. Check the high speed CAN low and CAN high circuits, repair as necessary. Clear the DTC and retest. If the problem persists, suspect the Suspension Control Module. Refer to the warranty policy and procedures manual if a module is suspect. Check the system is operating correctly and the DTC does not return

			■ Suspension Control Module power circuit open circuit ■ Suspension Control Module ground circuit open circuit ■ Suspension Control Module disconnected from the high speed CAN communication bus ■ Suspension Control Module high speed CAN Low circuit open circuit ■ Suspension Control Module high speed CAN High circuit open circuit ■ Suspension Control Module not configured ■ Suspension Control Module failure	

	U0140-00	Lost Communication With Body Control Module - No sub type information	■ The Terrain response control module has not received one or more expected messages from the Central Junction Box ■ High speed CAN circuit communications failure ■ Central Junction Box power circuit open circuit ■ Central Junction Box ground circuit open circuit ■ Central Junction Box disconnected from the high speed CAN communication bus ■ Central Junction Box high speed CAN Low circuit open circuit ■ Central Junction Box high speed CAN High circuit open circuit	■ Using the manufacturer approved diagnostic system, check the Central Junction Box for DTCs and refer to the relevant DTC index. Using the manufacturer approved diagnostic system, carry out network integrity test. Using the manufacturer approved diagnostic system, re-configure the Central Junction Box. Refer to electrical circuit diagrams check the power and ground connections to Central Junction Box. Check the high speed CAN low and CAN high circuits, repair as necessary. Clear the DTC and retest. If the problem persists, suspect the Central Junction Box. Refer to the warranty policy and procedures manual if a module is suspect. Check the system is operating correctly and the DTC does not return	

		■ Central Junction Box not configured ■ Central Junction Box failure	
U0300-00	Internal Control Module Software Incompatibility - No sub type information	■ The Terrain response control module has failed to recognize a matching master configuration ID from the CAN data bus master ■ The Terrain response control module has incorrect CAN configuration ■ CAN Bus master not correctly configured ■ Message containing config ID not received due to CAN Bus issue ■ Message containing config ID not transmitted by CAN Bus master	■ Using the manufacturer approved diagnostic system, check the CAN configuration in the Terrain response control module, check correct software versions installed and update as necessary. If similar DTCs from other modules exist suspect CAN Bus or CAN Bus master Control module. Check CAN Bus operation, check the CAN configuration in the CAN Bus master module, check correct software versions installed and update as necessary. Check the system is operating correctly and the DTC does not return

U0401-68	Invalid Data Received From The ECM/PCM 'A' - Event information	■ * The Terrain response control module has detected that the Engine Control Module had operated in a way or at a time that it had not been commanded to operate ■ The engine management system, Engine Control Module is unable to support normal terrain response functionality, the terrain response system will go into default condition ■ Engine management fault ■ Engine Control Module failure	■ Using the manufacturer approved diagnostic system, check the Engine Control Module for DTCs and refer to the relevant DTC index, rectify as required. Check the system is operating correctly and the DTC does not return. If the problem persists, suspect the Engine Control Module. Refer to the warranty policy and procedures manual if a module is suspect
U0402-68	Invalid Data Received From	■ The Terrain response control	■ Using the manufacturer approved diagnostic system, check the Transmission Control Module for DTCs and refer to the relevant DTC index,

	The TCM - Event information	module has detected that the Transmission Control Module had operated in a way or at a time that it had not been commanded to operate ■ The Transmission Control Module is unable to support normal terrain response functionality, the terrain response system will go into default condition ■ Transmission system fault ■ Transmission Control Module failure	rectify as required. Check the system is operating correctly and the DTC does not return. If the problem persists, suspect the Transmission Control Module. Refer to the warranty policy and procedures manual if a module is suspect	
U0403-68	Invalid Data Received From The Transfer Case Control Module - Event information	■ The Terrain response control module has detected that the Transfer Case Control Module had operated in a way or at a	■ Using the manufacturer approved diagnostic system, check the Transfer Case Control Module for DTCs and refer to the relevant DTC index, rectify as required. Check the system is operating correctly and the DTC does not return. If the problem persists, suspect the Transfer Case Control Module. Refer to the warranty policy and procedures manual if a module is suspect	

			time that it had not been commanded to operate ■ The Transfer Case Control Module is unable to support normal terrain response functionality, the terrain response system will go into default condition ■ Transfer Case system fault ■ Transfer Case Control Module failure	
	U0415-68	Invalid Data Received From Anti-Lock Brake System (ABS) Control Module - Event information	■ The Terrain response control module has detected that the ABS Module had operated in a way or at a time that it had not been commanded to operate	■ Using the manufacturer approved diagnostic system, check the ABS Module for DTCs and refer to the relevant DTC index, rectify as required. Check the system is operating correctly and the DTC does not return. If the problem persists, suspect the ABS Module. Refer to the warranty policy and procedures manual if a module is suspect

		■ The ABS Module is unable to support normal terrain response functionality, the terrain response system will go into default condition ■ ABS system fault ■ ABS Module failure	
U0421-68	Invalid Data Received From Suspension Control Module 'A' - Event information	■ The Terrain response control module has detected that the Suspension Control Module (Ride Level Module) had operated in a way or at a time that it had not been commanded to operate ■ The Suspension Control Module is unable to support normal terrain response functionality, the terrain response	■ Using the manufacturer approved diagnostic system, check the Suspension Control Module for DTCs and refer to the relevant DTC index, rectify as required. Check the system is operating correctly and the DTC does not return. If the problem persists, suspect the Suspension Control Module. Refer to the warranty policy and procedures manual if a module is suspect

		system will go into default condition ■ Suspension system fault ■ Suspension Control Module failure	
U0422-68	Invalid Data Received From Body Control Module - Event information	■ The Terrain response control module has detected that the Central Junction Box had operated in a way or at a time that it had not been commanded to operate ■ The Central Junction Box is unable to support normal terrain response functionality, the terrain response system will go into default condition ■ Central Junction Box system fault	■ Using the manufacturer approved diagnostic system, check the Central Junction Box for DTCs and refer to the relevant DTC index, rectify as required. Check the system is operating correctly and the DTC does not return. If the problem persists, suspect the Central Junction Box. Refer to the warranty policy and procedures manual if a module is suspect

		■ Central Junction Box failure	
U043A-68	Invalid Data Received From Suspension Control Module "B" - Event information	■ The Terrain response control module has detected that the Suspension Control Module (Continuously Variable Damping) had operated in a way or at a time that it had not been commanded to operate ■ The Suspension Control Module is unable to support normal terrain response functionality, the terrain response system will go into default condition ■ Suspension system fault ■ Suspension Control Module failure	■ Using the manufacturer approved diagnostic system, check the Suspension Control Module for DTCs and refer to the relevant DTC index, rectify as required. Check the system is operating correctly and the DTC does not return. If the problem persists, suspect the Suspension Control Module. Refer to the warranty policy and procedures manual if a module is suspect

U2101-00	Control Module Configuration Incompatible - No sub type information	■ The Terrain response control module has detected a mismatch between the hardware connected and the hardware expected ■ Vehicle not correctly configured ■ Incorrect components installed for vehicle configuration	■ Using the manufacturer approved diagnostic system, check the vehicle configuration file, rectify as necessary. Check correct components for vehicle configuration are installed, rectify as necessary. Check the system is operating correctly and the DTC does not return

GENERAL INFORMATION

DESCRIPTION AND OPERATION

TRANSFER CASE CONTROL MODULE (TCCM)

CAUTION:

Diagnosis by substitution from a donor vehicle is **NOT** acceptable. Substitution of control modules does not guarantee confirmation of a fault, and may also cause additional faults in the vehicle being tested and/or the donor vehicle.

NOTES:

- If a control module or a component is suspect and the vehicle remains under manufacturer warranty, refer to the Warranty Policy and Procedures manual, or determine if any prior approval programme is in operation, prior to the installation of a new module/component.
- Generic scan tools may not read the codes listed, or may read only 5-digit codes. Match the 5 digits from the scan tool to the first 5 digits of the 7-digit code listed to identify the fault (the last 2 digits give extra information read by the manufacturer-approved diagnostic system).
- When performing voltage or resistance tests, always use a digital multimeter accurate to three decimal places, and with an up-to-date calibration certificate. When testing resistance always take the resistance of the digital multimeter leads into account.
- Check and rectify basic faults before beginning diagnostic routines involving pinpoint tests.
- Inspect connectors for signs of water ingress, and pins for damage and/or corrosion.
- If DTCs are recorded and, after performing the pinpoint tests, a fault is not present, an intermittent concern may be the cause. Always check for loose connections and corroded terminals.
- Check DDW for open campaigns. Refer to the corresponding bulletins and SSMs which may be valid for the specific customer complaint and carry out the recommendations as required.

The table below lists all Diagnostic Trouble Codes (DTCs) that could be logged in the Transfer Case Control Module (TCCM). For additional diagnosis and testing information, refer to the relevant Diagnosis and Testing section in the workshop manual.
For additional information, refer to: Transfer Case (308-07B Transfer Case, Diagnosis and Testing).

DTC	DESCRIPTION	POSSIBLE CAUSES	ACTION
P0560-00	System Voltage - No sub type information	■ Transfer case control module power or ground circuit open circuit, high resistance ■ Battery/charging system fault ■ Transfer case control module internal failure	■ Using the manufacturer approved diagnostic system, check datalogger signal - ECU Power Supply Voltage (0xD111). Refer to the electrical circuit diagrams and check the transfer case control module power and ground circuits for open circuit, high resistance ■ Refer to the relevant section of the workshop manual and test the battery and charging system ■ Using the manufacturer approved diagnostic system, clear the DTCs and retest. If the fault persists, install a new transfer case control module and perform routine - Transfer Case Replacement
P0561-00	System Voltage Unstable - No sub type information	■ Transfer case control module power or ground circuit open circuit, high resistance ■ Battery/charging system fault ■ Transfer case control module internal failure	■ Using the manufacturer approved diagnostic system, check datalogger signal - ECU Power Supply Voltage (0xD111). Refer to the electrical circuit diagrams and check the transfer case control module power and ground circuits for open circuit, high resistance ■ Refer to the relevant section of the workshop manual and test the battery and charging system ■ Using the manufacturer approved diagnostic system, clear the DTCs and retest. If the fault persists, install a new transfer case control module and perform routine - Transfer Case Replacement
P0562-00	System Voltage Low - No sub type information	■ Transfer case control module power or ground circuit open circuit, high resistance	■ Using the manufacturer approved diagnostic system, check datalogger signal - ECU Power Supply Voltage (0xD111). Refer to the electrical circuit diagrams and check the transfer case control module power and ground circuits for open circuit, high resistance

		■ Battery/charging system fault ■ Transfer case control module internal failure	■ Refer to the relevant section of the workshop manual and test the battery and charging system ■ Using the manufacturer approved diagnostic system, clear the DTCs and retest. If the fault persists, install a new transfer case control module and perform routine - Transfer Case Replacement
P0563-00	System Voltage High - No sub type information	■ Battery/charging system fault	**NOTE:** This DTC may be set when the vehicle is jump started. ■ Using the manufacturer approved diagnostic system, check datalogger signal - ECU Power Supply Voltage (0xD111). Refer to the relevant section of the workshop manual and test the battery and charging system
P0607-00	Control Module Performance - No sub type information	■ Transfer case control module internal failure	■ Using the manufacturer approved diagnostic system, clear the DTCs and retest. If the fault persists, install a new transfer case control module and perform routine - Transfer Case Replacement
P0634-00	PCM / ECM / TCM Internal Temperature A Too High - No sub type information	■ Transfer case motor circuit short circuit to ground, short circuit to power, open circuit, high resistance ■ Transfer case control module internal failure	**NOTES:** ■ Transfer case motor resistance should be 0.2 ohms to 10.0 ohms. ■ This DTC may be induced by excessive high/low range changes. ■ This DTC may be induced by prolonged off-road driving.

			■ Allow the vehicle to cool. Using the manufacturer approved diagnostic system, clear the DTCs and retest. If the fault persists, refer to the electrical circuit diagrams and check the transfer case motor circuit for short circuit to ground, short circuit to power, open circuit, high resistance ■ Using the manufacturer approved diagnostic system, clear the DTCs and retest. If the fault persists, install a new transfer case control module and perform routine - Transfer Case Replacement
P0641-00	Sensor Reference Voltage A Circuit - No sub type information	■ Transfer case motor position sensor circuit short circuit to ground, short circuit to power, open circuit, high resistance ■ Transfer case control module internal failure	**NOTE:** Transfer case motor position sensor voltage (sensor supply to sensor ground) should be 8V to 11V, resistance (signal A circuit to ground circuit) should be 16.0k ohms to 20.0k ohms and resistance (signal B circuit to ground circuit) should be 16.0k ohms to 20.0k ohms. ■ Refer to the electrical circuit diagrams and check the transfer case motor position sensor circuit for short circuit to ground, short circuit to power, open circuit, high resistance ■ Using the manufacturer approved diagnostic system, clear the DTCs and retest. If the fault persists, install a new transfer case control module and perform routine - Transfer Case Replacement
P0642-00	Sensor Reference Voltage A Circuit Low - No sub type information	■ Transfer case motor position sensor circuit short circuit to ground	**NOTE:**

		■ Transfer case control module internal failure	Transfer case motor position sensor voltage (sensor supply to sensor ground) should be 8V to 11V, resistance (signal A circuit to ground circuit) should be 16.0k ohms to 20.0k ohms and resistance (signal B circuit to ground circuit) should be 16.0k ohms to 20.0k ohms. ■ Refer to the electrical circuit diagrams and check the transfer case motor position sensor circuit for short circuit to ground ■ Using the manufacturer approved diagnostic system, clear the DTCs and retest. If the fault persists, install a new transfer case control module and perform routine - Transfer Case Replacement
P0643-00	Sensor Reference Voltage A Circuit High - No sub type information	■ Transfer case motor position sensor circuit short circuit to power ■ Transfer case control module internal failure	△ NOTE: Transfer case motor position sensor voltage (sensor supply to sensor ground) should be 8V to 11V, resistance (signal A circuit to ground circuit) should be 16.0k ohms to 20.0k ohms and resistance (signal B circuit to ground circuit) should be 16.0k ohms to 20.0k ohms. ■ Refer to the electrical circuit diagrams and check the transfer case motor position sensor circuit for short circuit to power ■ Using the manufacturer approved diagnostic system, clear the DTCs and retest. If the fault persists, install a new transfer case control module and perform routine - Transfer Case Replacement
P0652-00	Sensor Reference Voltage B Circuit	■ Transfer case selector fork position sensor	△ NOTE:

	Low - No sub type information	circuit short circuit to ground ■ Transfer case control module internal failure	Transfer case selector fork position sensor voltage (supply circuit to ground circuit) should be 4.0V to 6.0V. ■ Refer to the electrical circuit diagrams and check the transfer case selector fork position sensor circuit for short circuit to ground ■ Using the manufacturer approved diagnostic system, clear the DTCs and retest. If the fault persists, install a new transfer case control module and perform routine - Transfer Case Replacement
P0653-00	Sensor Reference Voltage B Circuit High - No sub type information	■ Transfer case selector fork position sensor circuit short circuit to power ■ Transfer case control module internal failure	NOTE: Transfer case selector fork position sensor voltage (supply circuit to ground circuit) should be 4.0V to 6.0V. ■ Refer to the electrical circuit diagrams and check the transfer case selector fork position sensor circuit for short circuit to power ■ Using the manufacturer approved diagnostic system, clear the DTCs and retest. If the fault persists, install a new transfer case control module and perform routine - Transfer Case Replacement
P0666-00	PCM/ECM/TCM Internal Temperature Sensor 'A' Circuit - No sub type information	■ Transfer case solenoid circuit short circuit to ground	NOTE: Transfer case solenoid resistance should be 0.2 ohms to 10.0 ohms.

		■ Transfer case control module internal failure	■ Allow the vehicle to cool. Using the manufacturer approved diagnostic system, clear the DTCs and retest. If the fault persists, refer to the electrical circuit diagrams and check the transfer case solenoid circuit for short circuit to ground ■ Using the manufacturer approved diagnostic system, clear the DTCs and retest. If the fault persists, install a new transfer case control module and perform routine - Transfer Case Replacement
P0702-00	Transmission Control System Electrical - No sub type information	■ Transfer case control module power or ground circuit open circuit, high resistance ■ Battery/charging system fault	**NOTE:** This DTC may be set during a forced reset by the manufacturer approved diagnostic system. ■ Using the manufacturer approved diagnostic system, check datalogger signal - ECU Power Supply Voltage (0xD111). Refer to the electrical circuit diagrams and check the transfer case control module power and ground circuits for open circuit, high resistance ■ Refer to the relevant section of the workshop manual and test the battery and charging system
P0712-00	Transmission Fluid Temperature Sensor A Circuit Low - No sub type information	■ Transfer case motor temperature sensor circuit short circuit to ground ■ Transfer case control module internal failure	**NOTE:** Transfer case motor temperature sensor (temperature signal circuit to motor position sensor ground circuit) resistance should be 1.0k ohms to 30.0k ohms.

			■ Refer to the electrical circuit diagrams and check the transfer case motor temperature sensor circuit for short circuit to ground ■ Using the manufacturer approved diagnostic system, clear the DTCs and retest. If the fault persists, install a new transfer case control module and perform routine - Transfer Case Replacement
P0713-00	Transmission Fluid Temperature Sensor A Circuit High - No sub type information	■ Transfer case motor temperature sensor circuit short circuit to power ■ Transfer case control module internal failure	**NOTE:** Transfer case motor temperature sensor (temperature signal circuit to motor position sensor ground circuit) resistance should be 1.0k ohms to 30.0k ohms. ■ Refer to the electrical circuit diagrams and check the transfer case motor temperature sensor circuit for short circuit to power ■ Using the manufacturer approved diagnostic system, clear the DTCs and retest. If the fault persists, install a new transfer case control module and perform routine - Transfer Case Replacement
P0780-00	Shift Malfunction - No sub type information	■ Transfer case motor circuit short circuit to ground, short circuit to power, open circuit, high resistance ■ Transfer case motor position sensor circuit short circuit to ground, short circuit to power,	**NOTES:** ■ Transfer case motor resistance should be 0.2 ohms to 10.0 ohms. ■ Transfer case motor position sensor voltage (sensor supply to sensor ground) should be 8V to 11V, resistance (signal A circuit to ground circuit) should be 16.0k ohms to 20.0k ohms and resistance (signal B

		open circuit, high resistance ■ Transfer case control module internal failure ■ Transfer case internal failure	circuit to ground circuit) should be 16.0k ohms to 20.0k ohms. ■ Refer to the electrical circuit diagrams and check the transfer case motor circuit for short circuit to ground, short circuit to power, open circuit, high resistance ■ Refer to the electrical circuit diagrams and check the transfer case motor position sensor circuit for short circuit to ground, short circuit to power, open circuit, high resistance ■ Using the manufacturer approved diagnostic system, clear the DTCs and retest. If the fault persists, install a new transfer case control module and perform routine - Transfer Case Replacement ■ Using the manufacturer approved diagnostic system, clear the DTCs and retest. If the fault persists, install a new transfer case and perform routine - Transfer Case Replacement
P0806-00	Clutch Position Sensor Circuit Range /Performance - No sub type information	■ Transfer case selector fork position sensor not calibrated ■ Transfer case motor circuit short circuit to ground, short circuit to power, open circuit, high resistance ■ Transfer case motor position sensor circuit short circuit to ground, short circuit to power, open circuit, high resistance	**NOTES:** ■ If additional transfer case circuit fault related DTCs are also set, perform the relevant corrective action(s) first and retest. ■ Transfer case motor resistance should be 0.2 ohms to 10.0 ohms. ■ Transfer case motor position sensor voltage (sensor supply to sensor ground) should be 8V to 11V, resistance (signal A circuit to ground circuit) should be 16.0k ohms to 20.0k ohms and resistance (signal B circuit to ground circuit) should be 16.0k ohms to 20.0k ohms.

		■ Transfer case selector fork position sensor circuit short circuit to ground, short circuit to power, open circuit, high resistance ■ Transfer case motor failure ■ Transfer case selector fork position sensor failure ■ Transfer case control module internal failure ■ Transfer case internal failure	■ Transfer case selector fork position sensor voltage (supply circuit to ground circuit) should be 4.0V to 6.0V. ■ Using the manufacturer approved diagnostic system, perform routine - Transfer Case Replacement. Clear the DTCs and retest ■ Refer to the electrical circuit diagrams and check the transfer case motor circuit for short circuit to ground, short circuit to power, open circuit, high resistance ■ Refer to the electrical circuit diagrams and check the transfer case motor position sensor circuit for short circuit to ground, short circuit to power, open circuit, high resistance ■ Refer to the electrical circuit diagrams and check the transfer case selector fork position sensor circuit for short circuit to ground, short circuit to power, open circuit, high resistance ■ Using the manufacturer approved diagnostic system, clear the DTCs and retest. If the fault persists, install a new transfer case motor and perform routine - Transfer Case Replacement ■ Using the manufacturer approved diagnostic system, clear the DTCs and retest. If the fault persists, install a new transfer case selector fork position sensor and perform routine - Transfer Case Replacement ■ Using the manufacturer approved diagnostic system, clear the DTCs and retest. If the fault persists, install a new transfer case control module and perform routine - Transfer Case Replacement ■ Using the manufacturer approved diagnostic system, clear the DTCs and retest. If the fault persists, install a new transfer case and perform routine - Transfer Case Replacement
P0807-	Clutch Position		**NOTE:**

00	Sensor Circuit Low - No sub type information	■ Transfer case motor position sensor circuit short circuit to ground ■ Transfer case control module internal failure	Transfer case motor position sensor voltage (sensor supply to sensor ground) should be 8V to 11V, resistance (signal A circuit to ground circuit) should be 16.0k ohms to 20.0k ohms and resistance (signal B circuit to ground circuit) should be 16.0k ohms to 20.0k ohms. ■ Refer to the electrical circuit diagrams and check the transfer case motor position sensor circuit for short circuit to ground ■ Using the manufacturer approved diagnostic system, clear the DTCs and retest. If the fault persists, install a new transfer case control module and perform routine - Transfer Case Replacement
P0808-00	Clutch Position Sensor Circuit High - No sub type information	■ Transfer case motor position sensor circuit short circuit to ground ■ Transfer case control module internal failure	NOTE: Transfer case motor position sensor voltage (sensor supply to sensor ground) should be 8V to 11V, resistance (signal A circuit to ground circuit) should be 16.0k ohms to 20.0k ohms and resistance (signal B circuit to ground circuit) should be 16.0k ohms to 20.0k ohms. ■ Refer to the electrical circuit diagrams and check the transfer case motor position sensor circuit for short circuit to ground ■ Using the manufacturer approved diagnostic system, clear the DTCs and retest. If the fault persists, install a new transfer case control module and perform routine - Transfer Case Replacement
P0826-	Up and Down Switch		

00	Circuit - No sub type information	■ Transfer case high/low range switch stuck active ■ Transfer case high/low range switch signal circuit short circuit to power ■ Transfer case control module internal failure	**NOTES:** ■ This DTC will be set if the switch signal is active for > 255 seconds. ■ This DTC may be induced by the driver. ■ Check the operation of the transfer case high/low range switch ■ Using the manufacturer approved diagnostic system, check datalogger signal - TCCM Input Status (0x1983). Refer to the electrical circuit diagrams and check the transfer case high/low range switch signal circuits for short circuit to power ■ Using the manufacturer approved diagnostic system, clear the DTCs and retest. If the fault persists, install a new transfer case control module and perform routine - Transfer Case Replacement
P0900-00	Clutch Actuator Circuit/Open - No sub type information	■ Transfer case motor circuit short circuit to ground, short circuit to power, open circuit, high resistance ■ Transfer case control module internal failure	**NOTE:** Transfer case motor resistance should be 0.2 ohms to 10.0 ohms. ■ Refer to the electrical circuit diagrams and check the transfer case motor circuit for short circuit to ground, short circuit to power, open circuit, high resistance ■ Using the manufacturer approved diagnostic system, clear the DTCs and retest. If the fault persists, install a new transfer case control module and perform routine - Transfer Case Replacement

P0902-00	Clutch Actuator Circuit - No sub type information	■ Transfer case motor circuit short circuit to ground, short circuit to power, open circuit, high resistance ■ Transfer case control module internal failure	**NOTE:** Transfer case motor resistance should be 0.2 ohms to 10.0 ohms. ■ Refer to the electrical circuit diagrams and check the transfer case motor circuit for short circuit to ground, short circuit to power, open circuit, high resistance ■ Using the manufacturer approved diagnostic system, clear the DTCs and retest. If the fault persists, install a new transfer case control module and perform routine - Transfer Case Replacement
P0903-00	Clutch Actuator Circuit - No sub type information	■ Transfer case motor circuit short circuit to ground, short circuit to power, open circuit, high resistance ■ Transfer case control module internal failure	**NOTE:** Transfer case motor resistance should be 0.2 ohms to 10.0 ohms. ■ Refer to the electrical circuit diagrams and check the transfer case motor circuit for short circuit to ground, short circuit to power, open circuit, high resistance ■ Using the manufacturer approved diagnostic system, clear the DTCs and retest. If the fault persists, install a new transfer case control module and perform routine - Transfer Case Replacement
P0915-00	Gear Shift Position Circuit Range	■ Transfer case motor position sensor circuit	**NOTES:**

	/Performance - No sub type information	short circuit to ground, short circuit to power, open circuit, high resistance ■ Transfer case selector fork position sensor circuit short circuit to ground, short circuit to power, open circuit, high resistance ■ Transfer case selector fork position sensor failure ■ Transfer case motor failure ■ Transfer case control module internal failure	■ If additional transfer case circuit fault related DTCs are also set, perform the relevant corrective action(s) first and retest. ■ Transfer case motor position sensor voltage (sensor supply to sensor ground) should be 8V to 11V, resistance (signal A circuit to ground circuit) should be 16.0k ohms to 20.0k ohms and resistance (signal B circuit to ground circuit) should be 16.0k ohms to 20.0k ohms. ■ Transfer case selector fork position sensor voltage (supply circuit to ground circuit) should be 4.0V to 6.0V. ■ Refer to the electrical circuit diagrams and check the transfer case motor position sensor circuit for short circuit to ground, short circuit to power, open circuit, high resistance ■ Refer to the electrical circuit diagrams and check the transfer case selector fork position sensor circuit for short circuit to ground, short circuit to power, open circuit, high resistance ■ Using the manufacturer approved diagnostic system, clear the DTCs and retest. If the fault persists, install a new transfer case selector fork position sensor and perform routine - Transfer Case Replacement ■ Using the manufacturer approved diagnostic system, clear the DTCs and retest. If the fault persists, install a new transfer case motor and perform routine - Transfer Case Replacement ■ Using the manufacturer approved diagnostic system, clear the DTCs and retest. If the fault persists, install a new transfer case control module and perform routine - Transfer Case Replacement
P0916-	Gear Shift Position		**NOTE:**

00	Circuit Low - No sub type information	■ Transfer case selector fork position sensor circuit short circuit to ground ■ Transfer case control module internal failure	Transfer case selector fork position sensor voltage (supply circuit to ground circuit) should be 4.0V to 6.0V. ■ Refer to the electrical circuit diagrams and check the transfer case selector fork position sensor circuit for short circuit to ground ■ Using the manufacturer approved diagnostic system, clear the DTCs and retest. If the fault persists, install a new transfer case control module and perform routine - Transfer Case Replacement
P0917-00	Gear Shift Position Circuit High - No sub type information	■ Transfer case selector fork position sensor circuit short circuit to power ■ Transfer case control module internal failure	△ NOTE: Transfer case selector fork position sensor voltage (supply circuit to ground circuit) should be 4.0V to 6.0V. ■ Refer to the electrical circuit diagrams and check the transfer case selector fork position sensor circuit for short circuit to power ■ Using the manufacturer approved diagnostic system, clear the DTCs and retest. If the fault persists, install a new transfer case control module and perform routine - Transfer Case Replacement
P173A-00	Clutch Actuator Position Sensor	■ Transfer case motor circuit short circuit to	△ NOTES:

	Circuit Range /Performance - No sub type information	ground, short circuit to power, open circuit, high resistance ■ Transfer case motor position sensor circuit short circuit to ground, short circuit to power, open circuit, high resistance ■ Transfer case motor failure ■ Transfer case control module internal failure	■ If additional transfer case circuit fault related DTCs are also set, perform the relevant corrective action(s) first and retest. ■ Transfer case motor resistance should be 0.2 ohms to 10.0 ohms. ■ Transfer case motor position sensor voltage (sensor supply to sensor ground) should be 8V to 11V, resistance (signal A circuit to ground circuit) should be 16.0k ohms to 20.0k ohms and resistance (signal B circuit to ground circuit) should be 16.0k ohms to 20.0k ohms. ■ Refer to the electrical circuit diagrams and check the transfer case motor circuit for short circuit to ground, short circuit to power, open circuit, high resistance ■ Refer to the electrical circuit diagrams and check the transfer case motor position sensor circuit for short circuit to ground, short circuit to power, open circuit, high resistance ■ Using the manufacturer approved diagnostic system, clear the DTCs and retest. If the fault persists, install a new transfer case motor and perform routine - Transfer Case Replacement ■ Using the manufacturer approved diagnostic system, clear the DTCs and retest. If the fault persists, install a new transfer case control module and perform routine - Transfer Case Replacement
P173B-00	Clutch Actuator Position Sensor Circuit Low - No sub type information	■ Transfer case motor position sensor circuit short circuit to ground ■ Transfer case control module internal failure	**NOTE:** Transfer case motor position sensor voltage (sensor supply to sensor ground) should be 8V to 11V, resistance (signal

			A circuit to ground circuit) should be 16.0k ohms to 20.0k ohms and resistance (signal B circuit to ground circuit) should be 16.0k ohms to 20.0k ohms. ■ Refer to the electrical circuit diagrams and check the transfer case motor position sensor circuit for short circuit to ground ■ Using the manufacturer approved diagnostic system, clear the DTCs and retest. If the fault persists, install a new transfer case control module and perform routine - Transfer Case Replacement
P173C-00	Clutch Actuator Position Sensor Circuit High - No sub type information	■ Transfer case motor position sensor circuit short circuit to power ■ Transfer case control module internal failure	**NOTE:** Transfer case motor position sensor voltage (sensor supply to sensor ground) should be 8V to 11V, resistance (signal A circuit to ground circuit) should be 16.0k ohms to 20.0k ohms and resistance (signal B circuit to ground circuit) should be 16.0k ohms to 20.0k ohms. ■ Refer to the electrical circuit diagrams and check the transfer case motor position sensor circuit for short circuit to power ■ Using the manufacturer approved diagnostic system, clear the DTCs and retest. If the fault persists, install a new transfer case control module and perform routine - Transfer Case Replacement
P1804-00	4-Wheel Drive High Indicator Circuit Failure - No sub type information	■ Transfer case high range LED circuit short circuit to ground, open circuit, high resistance	■ Refer to the electrical circuit diagrams and check the transfer case high range LED circuit for short circuit to ground, open circuit, high resistance

P1806-00	4-Wheel Drive High Indicator Short Circuit To Battery - No sub type information	■ Transfer case high range LED circuit short circuit to power	■ Refer to the electrical circuit diagrams and check the transfer case high range LED circuit for short circuit to power
P1807-00	4-Wheel Drive High Indicator Short Circuit To Ground - No sub type information	■ Transfer case high range LED circuit short circuit to ground	■ Refer to the electrical circuit diagrams and check the transfer case high range LED circuit for short circuit to ground
P1808-00	4-Wheel Drive Low Indicator Circuit Failure - No sub type information	■ Transfer case low range LED circuit short circuit to ground, open circuit, high resistance	■ Refer to the electrical circuit diagrams and check the transfer case low range LED circuit for short circuit to ground, open circuit, high resistance
P1810-00	4-Wheel Drive Low Indicator Short Circuit To Battery - No sub type information	■ Transfer case low range LED circuit short circuit to power	■ Refer to the electrical circuit diagrams and check the transfer case low range LED circuit for short circuit to power
P181B-00	Clutch Actuator Changeover Solenoid Low - No sub type information	■ Transfer case solenoid circuit short circuit to ground ■ Transfer case control module internal failure	**NOTE:** Transfer case solenoid resistance should be 0.2 ohms to 10.0 ohms. ■ Refer to the electrical circuit diagrams and check the transfer case solenoid circuit for short circuit to ground

			■ Using the manufacturer approved diagnostic system, clear the DTCs and retest. If the fault persists, install a new transfer case control module and perform routine - Transfer Case Replacement
P181C-00	Clutch Actuator Changeover Solenoid High - No sub type information	■ Transfer case solenoid circuit short circuit to power ■ Transfer case control module internal failure	**NOTE:** Transfer case solenoid resistance should be 0.2 ohms to 10.0 ohms. ■ Refer to the electrical circuit diagrams and check the transfer case solenoid circuit for short circuit to power ■ Using the manufacturer approved diagnostic system, clear the DTCs and retest. If the fault persists, install a new transfer case control module and perform routine - Transfer Case Replacement
P181D-00	Clutch Actuator Changeover Solenoid Range /Performance - No sub type information	■ Transfer case motor position sensor circuit short circuit to ground, short circuit to power, open circuit, high resistance ■ Transfer case solenoid circuit short circuit to ground, short circuit to power, open circuit, high resistance ■ Transfer case motor failure	**NOTES:** ■ If additional transfer case circuit fault related DTCs are also set, perform the relevant corrective action(s) first and retest. ■ Transfer case motor position sensor voltage (sensor supply to sensor ground) should be 8V to 11V, resistance (signal A circuit to ground circuit) should be 16.0k ohms to 20.0k ohms and resistance (signal B circuit to ground circuit) should be 16.0k ohms to 20.0k ohms.

		■ Transfer case solenoid failure ■ Transfer case control module internal failure ■ Transfer case internal failure	■ Transfer case solenoid resistance should be 0.2 ohms to 10.0 ohms. ■ Refer to the electrical circuit diagrams and check the transfer case motor position sensor circuit for short circuit to ground, short circuit to power, open circuit, high resistance ■ Refer to the electrical circuit diagrams and check the transfer case solenoid circuit for short circuit to ground, short circuit to power, open circuit, high resistance ■ Using the manufacturer approved diagnostic system, clear the DTCs and retest. If the fault persists, install a new transfer case motor and perform routine - Transfer Case Replacement ■ Using the manufacturer approved diagnostic system, clear the DTCs and retest. If the fault persists, install a new transfer case solenoid and perform routine - Transfer Case Replacement ■ Using the manufacturer approved diagnostic system, clear the DTCs and retest. If the fault persists, install a new transfer case control module and perform routine - Transfer Case Replacement ■ Using the manufacturer approved diagnostic system, clear the DTCs and retest. If the fault persists, install a new transfer case and perform routine - Transfer Case Replacement
P181E-00	Clutch Actuator Range/Performance - No sub type information	■ Transfer case motor circuit short circuit to ground, short circuit to power, open circuit, high resistance ■ Transfer case motor position sensor circuit short circuit to ground,	**NOTES:** ■ If additional transfer case circuit fault related DTCs are also set, perform the relevant corrective action(s) first and retest. ■ Transfer case motor resistance should be 0.2 ohms to 10.0 ohms.

			short circuit to power, open circuit, high resistance ■ Transfer case solenoid circuit short circuit to ground, short circuit to power, open circuit, high resistance ■ Transfer case motor failure ■ Transfer case solenoid failure ■ Transfer case control module internal failure ■ Transfer case internal failure	■ Transfer case motor position sensor voltage (sensor supply to sensor ground) should be 8V to 11V, resistance (signal A circuit to ground circuit) should be 16.0k ohms to 20.0k ohms and resistance (signal B circuit to ground circuit) should be 16.0k ohms to 20.0k ohms. ■ Transfer case solenoid resistance should be 0.2 ohms to 10.0 ohms. ■ Refer to the electrical circuit diagrams and check the transfer case motor circuit for short circuit to ground, short circuit to power, open circuit, high resistance ■ Refer to the electrical circuit diagrams and check the transfer case motor position sensor circuit for short circuit to ground, short circuit to power, open circuit, high resistance ■ Refer to the electrical circuit diagrams and check the transfer case solenoid circuit for short circuit to ground, short circuit to power, open circuit, high resistance ■ Using the manufacturer approved diagnostic system, clear the DTCs and retest. If the fault persists, install a new transfer case motor and perform routine - Transfer Case Replacement ■ Using the manufacturer approved diagnostic system, clear the DTCs and retest. If the fault persists, install a new transfer case solenoid and perform routine - Transfer Case Replacement ■ Using the manufacturer approved diagnostic system, clear the DTCs and retest. If the fault persists, install a new transfer case control module and perform routine - Transfer Case Replacement ■ Using the manufacturer approved diagnostic system, clear the DTCs and retest. If the fault persists, install a new transfer case and perform routine - Transfer Case Replacement	

P181F-00	Clutch Control System Performance - No sub type information	■ Transfer case motor circuit short circuit to ground, short circuit to power, open circuit, high resistance ■ Transfer case motor position sensor circuit short circuit to ground, short circuit to power, open circuit, high resistance ■ Transfer case solenoid circuit short circuit to ground, short circuit to power, open circuit, high resistance ■ Transfer case control module internal failure ■ Transfer case motor failure ■ Transfer case solenoid failure ■ Transfer case internal failure	**NOTES:** ■ If additional transfer case circuit fault related DTCs are also set, perform the relevant corrective action(s) first and retest. ■ Transfer case motor resistance should be 0.2 ohms to 10.0 ohms. ■ Transfer case motor position sensor voltage (sensor supply to sensor ground) should be 8V to 11V, resistance (signal A circuit to ground circuit) should be 16.0k ohms to 20.0k ohms and resistance (signal B circuit to ground circuit) should be 16.0k ohms to 20.0k ohms. ■ Transfer case solenoid resistance should be 0.2 ohms to 10.0 ohms. ■ Refer to the electrical circuit diagrams and check the transfer case motor circuit for short circuit to ground, short circuit to power, open circuit, high resistance ■ Refer to the electrical circuit diagrams and check the transfer case motor position sensor circuit for short circuit to ground, short circuit to power, open circuit, high resistance ■ Refer to the electrical circuit diagrams and check the transfer case solenoid circuit for short circuit to ground, short circuit to power, open circuit, high resistance ■ Using the manufacturer approved diagnostic system, clear the DTCs and retest. If the fault persists, install a new transfer case control module and perform routine - Transfer Case Replacement

			■ Using the manufacturer approved diagnostic system, clear the DTCs and retest. If the fault persists, install a new transfer case motor and perform routine - Transfer Case Replacement ■ Using the manufacturer approved diagnostic system, clear the DTCs and retest. If the fault persists, install a new transfer case solenoid and perform routine - Transfer Case Replacement ■ Using the manufacturer approved diagnostic system, clear the DTCs and retest. If the fault persists, install a new transfer case and perform routine - Transfer Case Replacement
P183A-00	Range Change Mechanism Failure - No sub type information	■ Transfer case motor circuit short circuit to ground, short circuit to power, open circuit, high resistance ■ Transfer case motor position sensor circuit short circuit to ground, short circuit to power, open circuit, high resistance ■ Transfer case motor failure ■ Transfer case control module internal failure ■ Transfer case internal failure ■ Transmission fault - High drag torque in Neutral	**NOTES:** ■ If additional transfer case circuit fault related DTCs are also set, perform the relevant corrective action(s) first and retest. ■ If any transmission control module DTCs are also set, perform the relevant corrective action(s) first and retest. ■ Transfer case motor resistance should be 0.2 ohms to 10.0 ohms. ■ Transfer case motor position sensor voltage (sensor supply to sensor ground) should be 8V to 11V, resistance (signal A circuit to ground circuit) should be 16.0k ohms to 20.0k ohms and resistance (signal B circuit to ground circuit) should be 16.0k ohms to 20.0k ohms. ■ Refer to the electrical circuit diagrams and check the transfer case motor circuit for short circuit to ground, short circuit to power, open circuit, high resistance

				■ Refer to the electrical circuit diagrams and check the transfer case motor position sensor circuit for short circuit to ground, short circuit to power, open circuit, high resistance ■ Using the manufacturer approved diagnostic system, clear the DTCs and retest. If the fault persists, install a new transfer case motor and perform routine - Transfer Case Replacement ■ Using the manufacturer approved diagnostic system, clear the DTCs and retest. If the fault persists, install a new transfer case control module and perform routine - Transfer Case Replacement ■ Using the manufacturer approved diagnostic system, clear the DTCs and retest. If the fault persists, install a new transfer case and perform routine - Transfer Case Replacement ■ Refer to the relevant section of the workshop manual and test the transmission
P186D-00	Clutch Actuator Stuck - No sub type information	■ Transfer case motor circuit short circuit to ground, short circuit to power, open circuit, high resistance ■ Transfer case motor position sensor circuit short circuit to ground, short circuit to power, open circuit, high resistance ■ Transfer case solenoid circuit short circuit to ground, short circuit to power, open circuit, high resistance	**NOTES:** ■ If additional transfer case circuit fault related DTCs are also set, perform the relevant corrective action(s) first and retest. ■ Transfer case motor resistance should be 0.2 ohms to 10.0 ohms. ■ Transfer case motor position sensor voltage (sensor supply to sensor ground) should be 8V to 11V, resistance (signal A circuit to ground circuit) should be 16.0k ohms to 20.0k ohms and resistance (signal B circuit to ground circuit) should be 16.0k ohms to 20.0k ohms. ■ Transfer case solenoid resistance should be 0.2 ohms to 10.0 ohms.

		■ Transfer case motor failure ■ Transfer case control module internal failure ■ Transfer case internal failure	■ Refer to the electrical circuit diagrams and check the transfer case motor circuit for short circuit to ground, short circuit to power, open circuit, high resistance ■ Refer to the electrical circuit diagrams and check the transfer case motor position sensor circuit for short circuit to ground, short circuit to power, open circuit, high resistance ■ Refer to the electrical circuit diagrams and check the transfer case solenoid circuit for short circuit to ground, short circuit to power, open circuit, high resistance ■ Using the manufacturer approved diagnostic system, clear the DTCs and retest. If the fault persists, install a new transfer case motor and perform routine - Transfer Case Replacement ■ Using the manufacturer approved diagnostic system, clear the DTCs and retest. If the fault persists, install a new transfer case control module and perform routine - Transfer Case Replacement ■ Using the manufacturer approved diagnostic system, clear the DTCs and retest. If the fault persists, install a new transfer case and perform routine - Transfer Case Replacement
P2711-00	Unexpected Mechanical Gear Disengagement - No sub type information	■ Transfer case motor circuit short circuit to ground, short circuit to power, open circuit, high resistance ■ Transfer case motor position sensor circuit short circuit to ground,	**NOTES:** ■ If additional transfer case circuit fault related DTCs are also set, perform the relevant corrective action(s) first and retest. ■ If any transmission control module DTCs are also set, perform the relevant corrective action(s) first and retest. ■ Transfer case motor resistance should be 0.2 ohms to 10.0 ohms.

		short circuit to power, open circuit, high resistance ■ Transfer case motor failure ■ Transfer case control module internal failure ■ Transfer case internal failure ■ Transmission fault - High drag torque in Neutral	■ Transfer case motor position sensor voltage (sensor supply to sensor ground) should be 8V to 11V, resistance (signal A circuit to ground circuit) should be 16.0k ohms to 20.0k ohms and resistance (signal B circuit to ground circuit) should be 16.0k ohms to 20.0k ohms. ■ Refer to the electrical circuit diagrams and check the transfer case motor circuit for short circuit to ground, short circuit to power, open circuit, high resistance ■ Refer to the electrical circuit diagrams and check the transfer case motor position sensor circuit for short circuit to ground, short circuit to power, open circuit, high resistance ■ Using the manufacturer approved diagnostic system, clear the DTCs and retest. If the fault persists, install a new transfer case motor and perform routine - Transfer Case Replacement ■ Using the manufacturer approved diagnostic system, clear the DTCs and retest. If the fault persists, install a new transfer case control module and perform routine - Transfer Case Replacement ■ Using the manufacturer approved diagnostic system, clear the DTCs and retest. If the fault persists, install a new transfer case and perform routine - Transfer Case Replacement ■ Refer to the relevant section of the workshop manual and test the transmission
P2785-00	Clutch Actuator Temperature Too High - No sub type information	■ Transfer case motor temperature too high (> 150°C) ■ Transfer case motor circuit short circuit to	**NOTES:** ■ Transfer case motor resistance should be 0.2 ohms to 10.0 ohms.

		ground, short circuit to power, open circuit, high resistance ■ Transfer case control module internal failure	■ This DTC may be induced by prolonged off-road driving. ■ Allow the vehicle to cool. Using the manufacturer approved diagnostic system, clear the DTCs and retest ■ Refer to the electrical circuit diagrams and check the transfer case motor circuit for short circuit to ground, short circuit to power, open circuit, high resistance ■ Using the manufacturer approved diagnostic system, clear the DTCs and retest. If the fault persists, install a new transfer case control module and perform routine - Transfer Case Replacement
P2787-00	Clutch Temperature Too High - No sub type information	■ Transfer case clutch temperature too high ■ Incorrect specification wheels/tires installed - Mismatch between axle speeds ■ Front/rear driveshaft failure ■ Front/rear differential failure ■ Front/rear left/right halfshaft failure	△ NOTE: This DTC may be induced by prolonged off-road driving. ■ Allow the vehicle to cool. Using the manufacturer approved diagnostic system, clear the DTCs and retest ■ Check the wheel and tire specifications ■ Check the integrity of the front and rear driveshafts ■ Check the integrity of the front and rear differentials ■ Check the integrity of the halfshafts
P2789-00	Clutch Adaptive Learning at Limit - No sub type information	■ Transfer case clutch not calibrated ■ Transfer case motor position sensor circuit	△ NOTES:

			short circuit to ground, short circuit to power, open circuit, high resistance ■ Transfer case solenoid circuit short circuit to ground, short circuit to power, open circuit, high resistance ■ Transfer case fluid contaminated with water ■ Transfer case clutch worn/burnt ■ Transfer case control module internal failure	■ If additional transfer case circuit fault related DTCs are also set, perform the relevant corrective action(s) first and retest. ■ Transfer case motor position sensor voltage (sensor supply to sensor ground) should be 8V to 11V, resistance (signal A circuit to ground circuit) should be 16.0k ohms to 20.0k ohms and resistance (signal B circuit to ground circuit) should be 16.0k ohms to 20.0k ohms. ■ Transfer case solenoid resistance should be 0.2 ohms to 10.0 ohms. ■ Using the manufacturer approved diagnostic system, perform routine - Transfer Case Replacement ■ Refer to the electrical circuit diagrams and check the transfer case motor position sensor circuit for short circuit to ground, short circuit to power, open circuit, high resistance ■ Refer to the electrical circuit diagrams and check the transfer case solenoid circuit for short circuit to ground, short circuit to power, open circuit, high resistance ■ Refer to the relevant section of the workshop manual and check the transfer case fluid level/condition. If water is present in the fluid, check the integrity of the transfer case breather and install a new transfer case and perform routine - Transfer Case Replacement ■ Check the integrity of the driveshafts, differentials and half shafts. Rectify as necessary and install a new transfer case and perform routine - Transfer Case Replacement	

			■ Using the manufacturer approved diagnostic system, perform routine - Transfer Case Replacement. Clear the DTCs and retest. If the fault persists, install a new transfer case control module and perform routine - Transfer Case Replacement
U0001-88	High Speed CAN Communication Bus - Bus off	■ High speed CAN bus circuit short circuit to ground, short circuit to power, open circuit, high resistance	■ Using the manufacturer approved diagnostic system, perform a CAN network integrity test. Refer to the electrical circuit diagrams and check the high speed CAN bus circuit for short circuit to ground, short circuit to power, open circuit, high resistance
U0100-00	Lost Communication With ECM/PCM "A" - No sub type information	■ Engine control module power or ground circuit open circuit, high resistance ■ High speed CAN bus circuit short circuit to ground, short circuit to power, open circuit, high resistance ■ Engine system fault	■ Refer to the electrical circuit diagrams and check the engine control module power and ground circuits for open circuit, high resistance ■ Using the manufacturer approved diagnostic system, perform a CAN network integrity test. Refer to the electrical circuit diagrams and check the high speed CAN bus circuit for short circuit to ground, short circuit to power, open circuit, high resistance ■ Using the manufacturer approved diagnostic system, check the engine control module for related DTCs and refer to the relevant DTC index
U0101-00	Lost Communication with TCM - No sub type information	■ Transmission control module power or ground circuit open circuit, high resistance ■ High speed CAN bus circuit short circuit to ground, short circuit to power, open circuit, high resistance	■ Refer to the electrical circuit diagrams and check the transmission control module power and ground circuits for open circuit, high resistance ■ Using the manufacturer approved diagnostic system, perform a CAN network integrity test. Refer to the electrical circuit diagrams and check the high speed CAN bus circuit for short circuit to ground, short circuit to power, open circuit, high resistance

		■ Transmission system fault	■ Using the manufacturer approved diagnostic system, check the transmission control module for related DTCs and refer to the relevant DTC index
U0121-00	Lost Communication With Anti-Lock Brake System (ABS) Control Module - No sub type information	■ Anti-lock brake system control module power or ground circuit open circuit, high resistance ■ High speed CAN bus circuit short circuit to ground, short circuit to power, open circuit, high resistance ■ Anti-lock brake system fault	■ Refer to the electrical circuit diagrams and check the anti-lock brake system control module power and ground circuits for open circuit, high resistance ■ Using the manufacturer approved diagnostic system, perform a CAN network integrity test. Refer to the electrical circuit diagrams and check the high speed CAN bus circuit for short circuit to ground, short circuit to power, open circuit, high resistance ■ Using the manufacturer approved diagnostic system, check the anti-lock brake system control module for related DTCs and refer to the relevant DTC index
U0126-00	Lost Communication With Steering Angle Sensor Module - No sub type information	■ Steering angle sensor module power or ground circuit open circuit, high resistance ■ High speed CAN bus circuit short circuit to ground, short circuit to power, open circuit, high resistance ■ Steering angle sensor system fault	■ Refer to the electrical circuit diagrams and check the steering angle sensor module power and ground circuits for open circuit, high resistance ■ Using the manufacturer approved diagnostic system, perform a CAN network integrity test. Refer to the electrical circuit diagrams and check the high speed CAN bus circuit for short circuit to ground, short circuit to power, open circuit, high resistance ■ Using the manufacturer approved diagnostic system, check the steering angle sensor module for related DTCs and refer to the relevant DTC index
U0128-00	Lost Communication With Park Brake Control Module - No sub type information	■ Electric park brake control module power or ground circuit open circuit, high resistance	■ Refer to the electrical circuit diagrams and check the electric park brake control module power and ground circuits for open circuit, high resistance

		■ High speed CAN bus circuit short circuit to ground, short circuit to power, open circuit, high resistance ■ Electric park brake system fault	■ Using the manufacturer approved diagnostic system, perform a CAN network integrity test. Refer to the electrical circuit diagrams and check the high speed CAN bus circuit for short circuit to ground, short circuit to power, open circuit, high resistance ■ Using the manufacturer approved diagnostic system, check the electric park brake control module for related DTCs and refer to the relevant DTC index
U0132-00	Lost Communication With Suspension Control Module "A" - No sub type information	■ Air suspension control module power or ground circuit open circuit, high resistance ■ High speed CAN bus circuit short circuit to ground, short circuit to power, open circuit, high resistance ■ Air suspension system fault	■ Refer to the electrical circuit diagrams and check the air suspension control module power and ground circuits for open circuit, high resistance ■ Using the manufacturer approved diagnostic system, perform a CAN network integrity test. Refer to the electrical circuit diagrams and check the high speed CAN bus circuit for short circuit to ground, short circuit to power, open circuit, high resistance ■ Using the manufacturer approved diagnostic system, check the air suspension control module for related DTCs and refer to the relevant DTC index
U0136-00	Lost Communication With Differential Control Module - Rear - No sub type information	■ Rear differential control module power or ground circuit open circuit, high resistance ■ High speed CAN bus circuit short circuit to ground, short circuit to power, open circuit, high resistance ■ Rear differential system fault	■ Refer to the electrical circuit diagrams and check the rear differential control module power and ground circuits for open circuit, high resistance ■ Using the manufacturer approved diagnostic system, perform a CAN network integrity test. Refer to the electrical circuit diagrams and check the high speed CAN bus circuit for short circuit to ground, short circuit to power, open circuit, high resistance ■ Using the manufacturer approved diagnostic system, check the rear differential control module for related DTCs and refer to the relevant DTC index

U0138-00	Lost Communication with All Terrain Control Module - No sub type information	■ Terrain response switchpack power or ground circuit open circuit, high resistance ■ High speed CAN bus circuit short circuit to ground, short circuit to power, open circuit, high resistance ■ Terrain response system fault	■ Refer to the electrical circuit diagrams and check the terrain response switchpack power and ground circuits for open circuit, high resistance ■ Using the manufacturer approved diagnostic system, perform a CAN network integrity test. Refer to the electrical circuit diagrams and check the high speed CAN bus circuit for short circuit to ground, short circuit to power, open circuit, high resistance ■ Using the manufacturer approved diagnostic system, check the terrain response switchpack for related DTCs and refer to the relevant DTC index
U0140-00	Lost Communication With Body Control Module - No sub type information	■ Central junction box power or ground circuit open circuit, high resistance ■ High speed CAN bus circuit short circuit to ground, short circuit to power, open circuit, high resistance ■ Central junction box system fault	■ Refer to the electrical circuit diagrams and check the central junction box power and ground circuits for open circuit, high resistance ■ Using the manufacturer approved diagnostic system, perform a CAN network integrity test. Refer to the electrical circuit diagrams and check the high speed CAN bus circuit for short circuit to ground, short circuit to power, open circuit, high resistance ■ Using the manufacturer approved diagnostic system, check the central junction box for related DTCs and refer to the relevant DTC index
U0300-00	Internal Control Module Software Incompatibility - No sub type information	■ Transfer case control module is not configured correctly ■ Incorrect transfer case control module installed	■ Using the manufacturer approved diagnostic system, re-configure the transfer case control module with the latest level software

			▪ Using the manufacturer approved diagnostic system, clear the DTCs and retest. If the fault persists, install a new transfer case control module and perform routine - Transfer Case Replacement
U0401-00	Invalid Data Received From ECM /PCM A - No sub type information	▪ Missing/invalid data from the engine control module	▪ Using the manufacturer approved diagnostic system, check the engine control module for related DTCs and refer to the relevant DTC index
U0402-00	Invalid Data Received from TCM - No sub type information	▪ Missing/invalid data from the transmission control module	▪ Using the manufacturer approved diagnostic system, check the transmission control module for related DTCs and refer to the relevant DTC index
U0415-00	Invalid Data Received From Anti-Lock Brake System (ABS) Control Module - No sub type information	▪ Missing/invalid data from the anti-lock brake system control module	▪ Using the manufacturer approved diagnostic system, check the anti-lock brake system control module for related DTCs and refer to the relevant DTC index
U0417-00	Invalid Data Received From Park Brake Control Module - No sub type information	▪ Missing/invalid data from the electric park brake control module	▪ Using the manufacturer approved diagnostic system, check the electric park brake control module for related DTCs and refer to the relevant DTC index
U0428-00	Invalid Data Received From Steering Angle Sensor Module - No sub type information	▪ Missing/invalid data from the steering angle sensor module	▪ Using the manufacturer approved diagnostic system, check the steering angle sensor module for related DTCs and refer to the relevant DTC index
U3000-	Control Module -		

55	Not configured	■ Car configuration file mismatch with vehicle specification ■ Incorrect transfer case control module installed	■ Using the manufacturer approved diagnostic system, check and up-date the car configuration file as necessary ■ Using the manufacturer approved diagnostic system, clear the DTCs and retest. If the fault persists, install a new transfer case control module and perform routine - Transfer Case Replacement
U3003-62	Battery Voltage - Signal compare failure	■ Mismatch between the voltage at the transfer case control module and the voltage value broadcast on the CAN bus	■ Using the manufacturer approved diagnostic system, check datalogger signal - ECU Power Supply Voltage (0xD111) - and compare it to battery voltage. Refer to the electrical circuit diagrams and check the transfer case control module power and ground circuits for open circuit, high resistance

2012.0 RANGE ROVER (LM), 100-00

GENERAL INFORMATION

DESCRIPTION AND OPERATION

TRANSMISSION CONTROL MODULE (TCM) - 8 SPEED (8HP70 APPLICATIONS)

CAUTION:

Diagnosis by substitution from a donor vehicle is **NOT** acceptable. Substitution of control modules does not guarantee confirmation of a fault, and may also cause additional faults in the vehicle being tested and/or the donor vehicle

NOTES:

- If the control module or a component is suspect and the vehicle remains under manufacturer warranty, refer to the warranty policy and procedures manual, or determine if any prior approval programme is in operation, prior to the installation of a new module/component
- Generic scan tools may not read the codes listed, or may read only 5-digit codes. Match the 5 digits from the scan tool to the first 5 digits of the 7-digit code listed to identify the fault (the last 2 digits give extra information read by the manufacturer-approved diagnostic system)
- When performing voltage or resistance tests, always use a digital multimeter accurate to three decimal places and with a current calibration certificate. When testing resistance, always take the resistance of the digital multimeter leads into account
- Check and rectify basic faults before beginning diagnostic routines involving pinpoint tests
- Inspect connectors for signs of water ingress, and pins for damage and/or corrosion
- If diagnostic trouble codes are recorded and, after performing the pinpoint tests, a fault is not present, an intermittent concern may be the cause. Always check for loose connections and corroded terminals
- Where an 'on demand self-test' is referred to, this can be accessed via the 'diagnostic trouble code monitor' tab on the manufacturers approved diagnostic system
- Check DDW for open campaigns. Refer to the corresponding bulletins and SSMs which may be valid for the specific customer complaint and carry out the recommendations as required
- If a failure condition is reported indicating the need to renew the transmission assembly on a vehicle that remains under manufacturer warranty, an authorisation request must first go through the warranty prior approval programme before any work is begun

The table below lists all diagnostic trouble codes (DTCs) that could be logged in the transmission control module, for additional Diagnosis and Testing information refer to the relevant Diagnosis and Testing Section. For additional information, refer to: Diagnostics - TDV8 4.4L Diesel, Vehicles With: 8HP70 8-Speed Automatic Transmission AWD (307-01 Automatic Transmission/Transaxle - TDV8 4.4L Diesel, Diagnosis and Testing).

DTC	DESCRIPTION	POSSIBLE CAUSES	ACTION
B1087-41	LIN Bus "A" - General checksum failure	■ Local Interconnect Network (LIN) circuit fault	■ Refer to the electrical circuit diagrams and check Local Interconnect Network (LIN) circuit to Electronic Transmission Shift (ETS) module. Clear the DTC and retest
B1087-63	LIN Bus "A" - Circuit / component protection time-out	■ Local Interconnect Network (LIN) circuit fault	■ Refer to the electrical circuit diagrams and check Local Interconnect Network (LIN) circuit to Electronic Transmission Shift (ETS) module. Clear the DTC and retest
B1087-64	LIN Bus "A" - Signal plausibility failure	■ Signal plausibility failure	■ Gear selector position fault. Vehicle issue - Check gear selector unit
B1087-82	LIN Bus "A" - Alive / sequence counter incorrect / not updated	■ Local Interconnect Network (LIN) circuit fault	■ Refer to the electrical circuit diagrams and check Local Interconnect Network (LIN) circuit to Electronic Transmission Shift (ETS) module. Clear the DTC and retest
B1087-83	LIN Bus "A" - Signal plausibility failure - Value	■ Value of signal protection calculation incorrect	■ Gear selector position fault. Vehicle issue - Check gear selector unit

	of signal protection calculation incorrect		
B1087-88	LIN Bus "A" - Bus off	■ Local Interconnect Network (LIN) circuit fault	■ Refer to the electrical circuit diagrams and check Local Interconnect Network (LIN) circuit to Electronic Transmission Shift (ETS) module. Clear the DTC and retest
B108E-02	Display - General signal failure	■ General signal failure	■ Clear DTCs. Test drive the car and watch the displayed position matches the engaged gear. If the problem persists, renew the module. Refer to the Warranty Policy and Procedures manual, or determine if any prior approval programme is in operation, prior to the installation of a new module /component
C1A88-64	High Pressure Switching Valve #1 - Signal plausibility failure	■ Signal plausibility failure	■ Check the Transmission Control Module connector and the power/ground circuits to the Transmission Control Module. Clear the DTC and retest. If the problem persists, renew the Transmission Control Module (TCM). Refer to the Warranty Policy and Procedures manual, or determine if any prior approval programme is in operation, prior to the installation of a new module/component
P0071-02	Ambient Air Temperature Sensor Circuit "A" Range /Performance - General signal failure	■ Ambient air temperature sensor range performance	■ Check Engine Control Module (ECM) for related DTCs and refer to the relevant DTC index
P0121-86	Throttle/Pedal Position Sensor A Circuit Range		■ Check Engine Control Module (ECM) for related DTCs and refer to the relevant DTC index

	/Performance - Signal invalid	■ Throttle position sensor sensing circuit signal invalid ■ Throttle position sensor failure	
P0219-64	Engine Overspeed Condition - Signal plausibility failure	■ Crankshaft position sensor circuit ■ Camshaft position sensor circuit	■ Check Engine Control Module (ECM) for related DTCs and refer to the relevant DTC index. Clear the DTC and retest
P0562-1C	System Voltage Low - Circuit voltage out of range	■ Power supply voltage is out of range when the engine is running	■ Check the battery and charging system. Refer to the relevant workshop manual section. Clear the DTC and retest
P0562-21	System Voltage Low - Signal amplitude < minimum	■ Supply voltage to Transmission Control Module (TCM) very low	■ Check the battery condition and state of charge. Check the Transmission Control Module (TCM) connector and power supply circuits
P0563-22	System Voltage High - Signal amplitude > maximum	■ Power supply voltage is too high if the engine is running and there has been no jump-start or transmission limp-home event	■ Check the battery condition and state of charge. Check the Transmission Control Module (TCM) connector and power supply circuits. Check if the vehicle has been jump-started. Clear the DTC and retest

P0601-41	Internal Control Module Memory Check Sum Error - General checksum failure	■ Checksum error	■ Check the Transmission Control Module (TCM) connector and the power /ground circuits to the Transmission Control Module. Clear the DTC and retest. If the problem persists, renew the Transmission Control Module (TCM) as required. Refer to the Warranty Policy and Procedures manual, or determine if any prior approval programme is in operation, prior to the installation of a new module/component
P0606-04	Control Module Processor - System Internal Failures	■ Internal failure	■ Check the Transmission Control Module connector and the power/ground circuits to the Transmission Control Module. Clear the DTC and retest. If the problem persists, renew the Transmission Control Module (TCM). Refer to the Warranty Policy and Procedures manual, or determine if any prior approval programme is in operation, prior to the installation of a new module/component
P0606-11	Control Module Processor - Circuit short to ground	■ Internal failure	■ Check the Transmission Control Module connector and the power/ground circuits to the Transmission Control Module. Clear the DTC and retest. If the problem persists, renew the Transmission Control Module (TCM). Refer to the Warranty Policy and Procedures manual, or determine if any prior approval programme is in operation, prior to the installation of a new module/component
P0606-62	Control Module Processor - Signal compare failure	■ Internal failure	■ Check the Transmission Control Module connector and the power/ground circuits to the Transmission Control Module. Clear the DTC and retest. If the problem persists, renew the Transmission Control Module (TCM). Refer to the Warranty Policy and Procedures manual, or determine if any prior approval programme is in operation, prior to the installation of a new module/component
P0606-64	Control Module Processor - Signal	■ Internal failure	■ Check the Transmission Control Module connector and the power/ground circuits to the Transmission Control Module. Clear the DTC and retest. If the problem persists, renew the Transmission Control Module (TCM). Refer

	plausibility failure		to the Warranty Policy and Procedures manual, or determine if any prior approval programme is in operation, prior to the installation of a new module/component
P0613-04	TCM Processor - System internal failures	■ Internal failure	■ Check the Transmission Control Module connector and the power/ground circuits to the Transmission Control Module. Clear the DTC and retest. If the problem persists, renew the Transmission Control Module (TCM). Refer to the Warranty Policy and Procedures manual, or determine if any prior approval programme is in operation, prior to the installation of a new module/component
P0613-06	TCM Processor - Algorithm Based Failures	■ Internal processor watchdog error	■ Check the Transmission Control Module (TCM) connector and the power /ground circuits to the Transmission Control Module. Clear the DTC and retest. If the problem persists, renew the Transmission Control Module (TCM) as required. Refer to the Warranty Policy and Procedures manual, or determine if any prior approval programme is in operation, prior to the installation of a new module/component
P0613-11	TCM Processor - Circuit short to ground	■ Internal circuit short to ground	■ Check the Transmission Control Module connector and the power/ground circuits to the Transmission Control Module. Clear the DTC and retest. If the problem persists, renew the Transmission Control Module (TCM). Refer to the Warranty Policy and Procedures manual, or determine if any prior approval programme is in operation, prior to the installation of a new module/component
P0613-12	TCM Processor - Circuit short to battery	■ Internal circuit short to power	■ Check the Transmission Control Module connector and the power/ground circuits to the Transmission Control Module. Clear the DTC and retest. If the problem persists, renew the Transmission Control Module (TCM). Refer to the Warranty Policy and Procedures manual, or determine if any prior approval programme is in operation, prior to the installation of a new module/component

P0613-13	TCM Processor - Circuit open	■ Internal circuit open circuit	■ Check the Transmission Control Module connector and the power/ground circuits to the Transmission Control Module. Clear the DTC and retest. If the problem persists, renew the Transmission Control Module (TCM). Refer to the Warranty Policy and Procedures manual, or determine if any prior approval programme is in operation, prior to the installation of a new module/component
P0613-15	TCM Processor - Circuit short to battery or open	■ Internal circuit short to power or open circuit	■ Check the Transmission Control Module connector and the power/ground circuits to the Transmission Control Module. Clear the DTC and retest. If the problem persists, renew the Transmission Control Module (TCM). Refer to the Warranty Policy and Procedures manual, or determine if any prior approval programme is in operation, prior to the installation of a new module/component
P0613-18	TCM Processor - Circuit current below threshold	■ Internal circuit short to ground or open circuit	■ Check the Transmission Control Module connector and the power/ground circuits to the Transmission Control Module. Clear the DTC and retest. If the problem persists, renew the Transmission Control Module (TCM). Refer to the Warranty Policy and Procedures manual, or determine if any prior approval programme is in operation, prior to the installation of a new module/component
P061B-02	Internal Control Module Torque Calculation Performance - General signal failure	■ Internal failure	■ Check the Transmission Control Module connector and the power/ground circuits to the Transmission Control Module. Clear the DTC and retest. If the problem persists, renew the Transmission Control Module (TCM). Refer to the Warranty Policy and Procedures manual, or determine if any prior approval programme is in operation, prior to the installation of a new module/component
P061B-64	Internal Control Module Torque Calculation Performance#	■ Signal plausibility failure	■ Check the Transmission Control Module (TCM) connector and the power /ground circuits to the Transmission Control Module. Clear the DTC and retest. If the problem persists, renew the Transmission Control Module

	- Signal plausibility failure		(TCM) as required. Refer to the Warranty Policy and Procedures manual, or determine if any prior approval programme is in operation, prior to the installation of a new module/component
P062F-04	Internal Control Module EEPROM Error - System internal failures	■ EEPROM error	■ Check the Transmission Control Module (TCM) connector and the power /ground circuits to the Transmission Control Module. Clear the DTC and retest. If the problem persists, renew the Transmission Control Module (TCM) as required. Refer to the Warranty Policy and Procedures manual, or determine if any prior approval programme is in operation, prior to the installation of a new module/component
P0641-64	Sensor Reference Voltage A Circuit/Open - Signal plausibility failure	■ Internal failure	■ Check the Transmission Control Module connector and the power/ground circuits to the Transmission Control Module. Clear the DTC and retest. If the problem persists, check and install a new Transmission Control Module. Refer to the Warranty Policy and Procedures manual, or determine if any prior approval programme is in operation, prior to the installation of a new module/component
P0642-21	Sensor Reference Voltage A Circuit Low - Signal amplitude < minimum	■ Reference voltage circuit signal amplitude below minimum	■ Check the Transmission Control Module (TCM) connector and the power /ground circuits to the Transmission Control Module. Clear the DTC and retest. If the problem persists, renew the Transmission Control Module (TCM) as required. Refer to the Warranty Policy and Procedures manual, or determine if any prior approval programme is in operation, prior to the installation of a new module/component
P0643-22	Sensor Reference Voltage A Circuit High - Signal amplitude > maximum	■ Reference voltage circuit signal amplitude above maximum	■ Check the Transmission Control Module (TCM) connector and the power /ground circuits to the Transmission Control Module. Clear the DTC and retest. If the problem persists, renew the Transmission Control Module (TCM) as required. Refer to the Warranty Policy and Procedures manual, or determine if any prior approval programme is in operation, prior to the installation of a new module/component

P0657-13	Actuator Supply Voltage A Circuit / Open - Circuit open	■ Supply voltage circuit open circuit	■ Check for other related DTCs. Check the park lock actuator, the actuator connector and wiring. Check the Transmission Control Module (TCM) connector and the power/ground circuits to the module. Clear the DTC and test the shift lever in all positions. If the problem persists, check and install a new Transmission Control Module. Refer to the Warranty Policy and Procedures manual, or determine if any prior approval programme is in operation, prior to the installation of a new module/component
P0657-64	Actuator Supply Voltage A Circuit / Open - Signal plausibility failure	■ Actuator supply (pressure control valves etc) voltage plausibility fault	■ Check solenoid at lever, check wiring and connectors, clear DTCs. Test position lever in all positions and cycle ignition. If the problem persists, check and install a new Transmission Control Module. Refer to the Warranty Policy and Procedures manual, or determine if any prior approval programme is in operation, prior to the installation of a new module /component
P0658-11	Actuator Supply Voltage A Circuit Low - Circuit short to ground	■ Supply voltage circuit short circuit to ground	■ Check the Transmission Control Module (TCM) connector and the power /ground circuits to the module. If the problem persists, check and install a new Transmission Control Module. Refer to the Warranty Policy and Procedures manual, or determine if any prior approval programme is in operation, prior to the installation of a new module/component
P0659-12	Actuator Supply Voltage A Circuit High - Circuit short to battery	■ Supply voltage circuit short circuit to power	■ Check the Transmission Control Module (TCM) connector and the power /ground circuits to the module. If the problem persists, check and install a new Transmission Control Module. Refer to the Warranty Policy and Procedures manual, or determine if any prior approval programme is in operation, prior to the installation of a new module/component
P0666-64	Control Module Internal Temperature Sensor "A"	■ Internal Temperature Sensor	■ Check for engine overheating and cooling system faults. Check the Transmission Control Module connector and the power/ground circuits to the module. Allow the Transmission Control Module to cool. Clear the DTC and retest. If the problem persists, renew the module. Consider environmental conditions before condemning the module. Refer to the Warranty Policy and Procedures manual, or determine if any prior approval

	Circuit - Signal plausibility failure		programme is in operation, prior to the installation of a new module /component
P0667-01	PCM / ECM / TCM Internal Temperature Sensor Range /Performance - General electrical failure	■ Module internal temperature sensor general failure	■ Check for engine overheating and cooling system faults. Check the Transmission Control Module connector and the power/ground circuits to the module. Allow the Transmission Control Module to cool. Clear the DTC and retest. If the problem persists, renew the module. Consider environmental conditions before condemning the module. Refer to the Warranty Policy and Procedures manual, or determine if any prior approval programme is in operation, prior to the installation of a new module /component
P0668-21	PCM / ECM / TCM Internal Temperature Sensor A Circuit Low - Signal amplitude < minimum	■ Module internal temperature too low ■ Temperature sensor circuit high resistance ■ Temperature sensor circuit short circuit to ground	■ Check the Transmission Control Module connector and the power/ground circuits to the module. Allow the Transmission Control Module to cool. Clear the DTC and retest. If the problem persists, renew the module. Consider environmental conditions before condemning the module. Refer to the Warranty Policy and Procedures manual, or determine if any prior approval programme is in operation, prior to the installation of a new module/component
P0669-22	ECM / ECM / TCM Internal Temperature Sensor A Circuit High - Signal amplitude > maximum	■ Module internal temperature too high ■ Temperature sensor circuit short circuit to power	■ Check for engine overheating and cooling system faults. Check the Transmission Control Module connector and the power/ground circuits to the module. Allow the Transmission Control Module to cool. Clear the DTC and retest. If the problem persists, renew the module. Consider environmental conditions before condemning the module. Refer to the Warranty Policy and Procedures manual, or determine if any prior approval programme is in operation, prior to the installation of a new module /component

P06AC-01	PCM / ECM / TCM Internal Temperature Sensor B Range /Performance - General Electrical Failure	■ General electrical failure	■ Check for engine overheating and cooling system faults. Check the Transmission Control Module connector and the power/ground circuits to the module. Allow the Transmission Control Module to cool. Clear the DTC and retest. If the problem persists, renew the module. Consider environmental conditions before condemning the module. Refer to the Warranty Policy and Procedures manual, or determine if any prior approval programme is in operation, prior to the installation of a new module /component
P06AC-64	PCM / ECM / TCM Internal Temperature Sensor B Range /Performance - Signal plausibility failure	■ Signal plausibility failure	■ Check for engine overheating and cooling system faults. Check the Transmission Control Module connector and the power/ground circuits to the module. Allow the Transmission Control Module to cool. Clear the DTC and retest. If the problem persists, renew the module. Consider environmental conditions before condemning the module. Refer to the Warranty Policy and Procedures manual, or determine if any prior approval programme is in operation, prior to the installation of a new module /component
P06AD-22	PCM / ECM / TCM Internal Temperature Sensor B Circuit Low - Signal amplitude > maximum	■ Signal amplitude greater than maximum	■ Check for engine overheating and cooling system faults. Check the Transmission Control Module connector and the power/ground circuits to the module. Allow the Transmission Control Module to cool. Clear the DTC and retest. If the problem persists, renew the module. Consider environmental conditions before condemning the module. Refer to the Warranty Policy and Procedures manual, or determine if any prior approval programme is in operation, prior to the installation of a new module /component
P06AE-21	PCM / ECM / TCM Internal Temperature Sensor B Circuit High -	■ Signal amplitude greater than minimum	■ TCM chip temperature fault. Allow cooling time. If fault occurs again refer to the warranty policies and procedures before renewing a Transmission Control Module

	Signal amplitude < minimum		
P0700-02	Transmission Control System (MIL Request) - General signal failure	■ General signal failure	■ Check for other DTCs and rectify those first. Clear the DTCs and road test the vehicle. If further DTCs are logged, investigate according to the individual faults logged
P0700-83	Transmission Control System (MIL Request) - Value of signal protection calculation incorrect	■ Value of signal protection calculation incorrect	■ Check the Transmission Control Module connector and the power/ground circuits to the Transmission Control Module. Clear the DTC and retest. If the problem persists, renew the Transmission Control Module (TCM). Refer to the Warranty Policy and Procedures manual, or determine if any prior approval programme is in operation, prior to the installation of a new module/component
P0702-98	Transmission Control System (MIL Request) - Value of signal protection calculation incorrect	■ Value of signal protection calculation incorrect	■ Check the transmission oil level and quality, refer to the relevant section of the workshop manual. Clear the DTC and test drive the vehicle. Check the Transmission Control Module connector and the power/ground circuits to the Transmission Control Module. Clear the DTC and retest
P0710-04	Transmission Control System Electrical - Component or system over temperature	■ Component or system over temperature	■ Check transmission cooling circuit. Clear DTCs and test drive the vehicle. If the problem persists, renew the Transmission Control Module (TCM). Refer to the Warranty Policy and Procedures manual, or determine if any prior approval programme is in operation, prior to the installation of a new module/component
P0710-13	Transmission Fluid	■ Transmission fluid temperature	■ Check the Transmission Control Module (TCM) connector and the power /ground circuits to the Transmission Control Module. Clear the DTC and

	Temperature Sensor A Circuit - Circuit open	sensor circuit open circuit ■ Temperature sensor fault	retest. If the problem persists, renew the Transmission Control Module (TCM) as required. Consider environmental conditions before condemning the module. Refer to the Warranty Policy and Procedures manual, or determine if any prior approval programme is in operation, prior to the installation of a new module/component
P0710-27	Transmission Fluid Temperature Sensor A Circuit - Signal rate of change above threshold	■ Transmission fluid temperature sensor signal rate of change above threshold	■ Allow the transmission to cool, clear the DTC and retest. Clear the DTC and retest. If the problem persists, renew the Transmission Control Module (TCM). Refer to the Warranty Policy and Procedures manual, or determine if any prior approval programme is in operation, prior to the installation of a new module/component
P0710-64	Transmission Fluid Temperature Sensor A Circuit - Signal plausibility failure	■ Transmission fluid temperature sensor signal plausibility failure	■ Allow the transmission to cool, clear the DTC and retest. Clear the DTC and retest. If the problem persists, renew the Transmission Control Module (TCM). Refer to the Warranty Policy and Procedures manual, or determine if any prior approval programme is in operation, prior to the installation of a new module/component
P0712-11	Transmission Fluid Temperature Sensor A Circuit Low - Circuit short to ground	■ Sensor circuit short circuit to ground	■ Check the Transmission Control Module (TCM) connector and the power /ground circuits to the Transmission Control Module. Clear the DTC and retest. If the problem persists, renew the Transmission Control Module (TCM) as required. Refer to the Warranty Policy and Procedures manual, or determine if any prior approval programme is in operation, prior to the installation of a new module/component
P0713-12	Transmission Fluid Temperature Sensor A	■ Transmission Fluid Temperature Sensor circuit short circuit to power	■ Check the Transmission Control Module (TCM) connector and the power /ground circuits to the Transmission Control Module. Clear the DTC and retest. If the problem persists, renew the Transmission Control Module (TCM) as required. Refer to the Warranty Policy and Procedures manual, or determine if any prior approval programme is in operation, prior to the installation of a new module/component

	Circuit High - Circuit short to battery		
P0715-12	Turbine/Input Shaft Speed Sensor A Circuit - Circuit short to battery	■ Turbine sensor circuit short to power	■ Check the Transmission Control Module connector and the power/ground circuits to the Transmission Control Module. Clear the DTC and retest. If the problem persists, renew the Transmission Control Module (TCM). Refer to the Warranty Policy and Procedures manual, or determine if any prior approval programme is in operation, prior to the installation of a new module/component.
P0715-64	Turbine/Input Shaft Speed Sensor A Circuit - Signal plausibility failure	■ Turbine sensor signal plausibility failure	■ Clear the DTC and test drive the vehicle. Check output speed and vehicle speed plausibility against turbine speed If the problem persists renew the Transmission Control Module (TCM). Refer to the Warranty Policy and Procedures manual, or determine if any prior approval programme is in operation, prior to the installation of a new module/component.
P0716-14	Turbine/Input Shaft Speed Sensor A Circuit Range /Performance - Circuit short to ground or open	■ Sensor circuit short circuit to ground or open circuit	■ Check the Transmission Control Module (TCM) connector and the power /ground circuits to the Transmission Control Module. Clear the DTC and retest. If the problem persists, renew the Transmission Control Module (TCM) as required. Refer to the Warranty Policy and Procedures manual, or determine if any prior approval programme is in operation, prior to the installation of a new module/component
P0716-27	Turbine/Input Shaft Speed Sensor A Circuit Range /Performance - Signal rate of change above threshold	■ Turbine sensor signal rate of change above threshold	■ Check the Transmission Control Module (TCM) connector and the power /ground circuits to the Transmission Control Module. Clear the DTC and retest. If the problem persists, renew the Transmission Control Module (TCM) as required. Refer to the Warranty Policy and Procedures manual, or determine if any prior approval programme is in operation, prior to the installation of a new module/component
P0716-	Turbine/Input		

64	Shaft Speed Sensor A Circuit Range /Performance - Signal plausibility failure	■ Turbine sensor signal plausibility failure	■ Check the Transmission Control Module (TCM) connector and the power /ground circuits to the Transmission Control Module. Clear the DTC and retest. If the problem persists, renew the Transmission Control Module (TCM) as required. Refer to the Warranty Policy and Procedures manual, or determine if any prior approval programme is in operation, prior to the installation of a new module/component
P0720-12	Output Shaft Speed Sensor Circuit - Circuit short to battery	■ Sensor circuit short circuit to power	■ Check the Transmission Control Module (TCM) connector and the power /ground circuits to the Transmission Control Module. Clear the DTC and retest. If the problem persists, renew the Transmission Control Module (TCM) as required. Refer to the Warranty Policy and Procedures manual, or determine if any prior approval programme is in operation, prior to the installation of a new module/component
P0720-14	Output Shaft Speed Sensor Circuit - Circuit short to ground or open	■ Sensor circuit short circuit to ground or open circuit	■ Check the Transmission Control Module (TCM) connector and the power /ground circuits to the Transmission Control Module. Clear the DTC and retest. If the problem persists, renew the Transmission Control Module (TCM) as required. Refer to the Warranty Policy and Procedures manual, or determine if any prior approval programme is in operation, prior to the installation of a new module/component
P0720-64	Output Shaft Speed Sensor Circuit - Signal plausibility failure	Output shaft speed sensor signal plausibility failure	■ Check the Transmission Control Module (TCM) connector and the power /ground circuits to the Transmission Control Module. Clear the DTC and retest. If the problem persists, renew the Transmission Control Module (TCM) as required. Refer to the Warranty Policy and Procedures manual, or determine if any prior approval programme is in operation, prior to the installation of a new module/component
P0721-02	Output Shaft Speed Sensor Circuit Range /Performance -	■ Output shaft speed sensor general signal failure	■ Check the Transmission Control Module (TCM) connector and the power /ground circuits to the Transmission Control Module. Clear the DTC and retest. If the problem persists, renew the Transmission Control Module (TCM) as required. Refer to the Warranty Policy and Procedures manual, or

	General signal failure		determine if any prior approval programme is in operation, prior to the installation of a new module/component
P0721-27	Output Shaft Speed Sensor Circuit Range /Performance - Signal rate of change above threshold	■ Signal rate of change above threshold	■ Check for the possible wheel lock up due to Anti-lock Braking System (ABS) issue. Check Anti-lock Braking System (ABS) module for related DTCs. Check the Transmission Control Module (TCM) connector and the power/ground circuits to the Transmission Control Module. Clear the DTC and retest. If the problem persists, renew the Transmission Control Module (TCM) as required. Refer to the Warranty Policy and Procedures manual, or determine if any prior approval programme is in operation, prior to the installation of a new module/component
P0721-62	Output Shaft Speed Sensor Circuit Range /Performance - Signal compare failure	■ Output shaft speed sensor circuit signal compare failure	■ Check the Transmission Control Module (TCM) connector and the power /ground circuits to the Transmission Control Module. Clear the DTC and retest. If the problem persists, renew the Transmission Control Module (TCM) as required. Refer to the Warranty Policy and Procedures manual, or determine if any prior approval programme is in operation, prior to the installation of a new module/component
P0721-64	Output Shaft Speed Sensor Circuit Range /Performance - Signal plausibility failure	■ Engine speed signal plausibility failure	■ Check the Transmission Control Module (TCM) connector and the power /ground circuits to the Transmission Control Module. Clear the DTC and test drive the vehicle. Clear the DTC and retest. If the problem persists, renew the Transmission Control Module (TCM) as required. Refer to the Warranty Policy and Procedures manual, or determine if any prior approval programme is in operation, prior to the installation of a new module /component
P0725-83	Engine Speed Input Circuit - Value of signal protection calculation incorrect	■ Engine speed input circuit failure	■ Check Engine Control Module (ECM) for related DTCs and refer to the relevant DTC index

P0729-07	Gear 6 Incorrect Ratio - Mechanical failures	■ Mechanical failures	■ Check the transmission oil level and quality, refer to the relevant section of the workshop manual. Clear the DTC and test drive the vehicle. Clear the DTC and retest. If the problem persists, renew the transmission. Refer to the Warranty Policy and Procedures manual, or determine if any prior approval programme is in operation, prior to the installation of a new module/component
P0730-00	Incorrect Gear Ratio - No sub type information	■ Mechanical failures	■ Check the transmission oil level and quality, refer to the relevant section of the workshop manual. Clear the DTC and test drive the vehicle. Clear the DTC and retest. If the problem persists, renew the transmission. Refer to the Warranty Policy and Procedures manual, or determine if any prior approval programme is in operation, prior to the installation of a new module/component
P0731-07	Gear 1 Incorrect Ratio - Mechanical failures	■ Mechanical failures	■ Check the transmission oil level and quality, refer to the relevant section of the workshop manual. Clear the DTC and test drive the vehicle. Clear the DTC and retest. If the problem persists, renew the transmission. Refer to the Warranty Policy and Procedures manual, or determine if any prior approval programme is in operation, prior to the installation of a new module/component
P0732-07	Gear 2 Incorrect Ratio - Mechanical failures	■ Mechanical failures	■ Check the transmission oil level and quality, refer to the relevant section of the workshop manual. Clear the DTC and test drive the vehicle. Clear the DTC and retest. If the problem persists, renew the transmission. Refer to the Warranty Policy and Procedures manual, or determine if any prior approval programme is in operation, prior to the installation of a new module/component
P0733-07	Gear 3 Incorrect Ratio - Mechanical failures	■ Mechanical failures	■ Check the transmission oil level and quality, refer to the relevant section of the workshop manual. Clear the DTC and test drive the vehicle. Clear the DTC and retest. If the problem persists, renew the transmission. Refer to the Warranty Policy and Procedures manual, or determine if any prior

			approval programme is in operation, prior to the installation of a new module/component
P0734-07	Gear 4 Incorrect Ratio - Mechanical failures	■ Mechanical failures	■ Check the transmission oil level and quality, refer to the relevant section of the workshop manual. Clear the DTC and test drive the vehicle. Clear the DTC and retest. If the problem persists, renew the transmission. Refer to the Warranty Policy and Procedures manual, or determine if any prior approval programme is in operation, prior to the installation of a new module/component
P0735-07	Gear 5 Incorrect Ratio - Mechanical failures	■ Mechanical failures	■ Check the transmission oil level and quality, refer to the relevant section of the workshop manual. Clear the DTC and test drive the vehicle. Clear the DTC and retest. If the problem persists, renew the transmission. Refer to the Warranty Policy and Procedures manual, or determine if any prior approval programme is in operation, prior to the installation of a new module/component
P0736-07	Reverse Incorrect Ratio - Mechanical failures	■ Mechanical failures	■ Check the transmission oil level and quality, refer to the relevant section of the workshop manual. Clear the DTC and test drive the vehicle. Clear the DTC and retest. If the problem persists, renew the transmission. Refer to the Warranty Policy and Procedures manual, or determine if any prior approval programme is in operation, prior to the installation of a new module/component
P0741-07	Torque Converter Clutch Solenoid Circuit Performance /Stuck Off - Mechanical failures	■ Mechanical failures	■ Check the transmission oil level and quality, refer to the relevant section of the workshop manual. Clear the DTC and test drive the vehicle. If the problem persists, renew the torque convertor. If the problem still persists, renew the transmission. Refer to the Warranty Policy and Procedures manual, or determine if any prior approval programme is in operation, prior to the installation of a new module/component

P0745-11	Pressure Control Solenoid A - Circuit short to ground	■ Pressure control solenoid A circuit short to ground	■ Check the Transmission Control Module (TCM) connector and the power /ground circuits to the Transmission Control Module. Clear the DTC and retest. If the problem persists, renew the Transmission Control Module (TCM) as required. Refer to the Warranty Policy and Procedures manual, or determine if any prior approval programme is in operation, prior to the installation of a new module/component
P0745-12	Pressure Control Solenoid A - Circuit short to battery	■ Pressure control solenoid A circuit short to power	■ Check the Transmission Control Module (TCM) connector and the power /ground circuits to the Transmission Control Module. Clear the DTC and retest. If the problem persists, renew the Transmission Control Module (TCM) as required. Refer to the Warranty Policy and Procedures manual, or determine if any prior approval programme is in operation, prior to the installation of a new module/component
P0745-13	Pressure Control Solenoid A - Circuit open	■ Pressure control solenoid A circuit, open circuit	■ Check the Transmission Control Module (TCM) connector and the power /ground circuits to the Transmission Control Module. Clear the DTC and retest. If the problem persists, renew the Transmission Control Module (TCM) as required. Refer to the Warranty Policy and Procedures manual, or determine if any prior approval programme is in operation, prior to the installation of a new module/component
P0745-14	Pressure Control Solenoid A - Circuit short to ground or open	■ Pressure control solenoid A circuit short to ground, open circuit	■ Check the Transmission Control Module (TCM) connector and the power /ground circuits to the Transmission Control Module. Clear the DTC and retest. If the problem persists, renew the Transmission Control Module (TCM) as required. Refer to the Warranty Policy and Procedures manual, or determine if any prior approval programme is in operation, prior to the installation of a new module/component
P0745-64	Pressure Control Solenoid A -	■ Pressure control solenoid A circuit signal plausibility failure	■ Check the Transmission Control Module (TCM) connector and the power /ground circuits to the Transmission Control Module. Clear the DTC and retest. If the problem persists, renew the Transmission Control Module

	Signal plausibility failure		(TCM) as required. Refer to the Warranty Policy and Procedures manual, or determine if any prior approval programme is in operation, prior to the installation of a new module/component
P0745-93	Pressure Control Solenoid A - No operation	■ Control solenoid not operating	■ Check the Transmission Control Module (TCM) connector and the power /ground circuits to the Transmission Control Module. Clear the DTC and retest. If the problem persists, renew the Transmission Control Module (TCM) as required. Refer to the Warranty Policy and Procedures manual, or determine if any prior approval programme is in operation, prior to the installation of a new module/component
P0745-94	Pressure Control Solenoid A - Unexpected operation	■ Control solenoid unexpected operation	■ Check the Transmission Control Module (TCM) connector and the power /ground circuits to the Transmission Control Module. Clear the DTC and retest. If the problem persists, renew the Transmission Control Module (TCM) as required. Refer to the Warranty Policy and Procedures manual, or determine if any prior approval programme is in operation, prior to the installation of a new module/component
P0748-11	Pressure Control Solenoid A Electrical - Circuit short to ground	■ Pressure control solenoid A circuit short to ground	■ Check the Transmission Control Module (TCM) connector and the power /ground circuits to the Transmission Control Module. Clear the DTC and retest. If the problem persists, renew the Transmission Control Module (TCM) as required. Refer to the Warranty Policy and Procedures manual, or determine if any prior approval programme is in operation, prior to the installation of a new module/component
P0748-12	Pressure Control Solenoid A Electrical - Circuit short to battery	■ Pressure control solenoid A circuit short to power	■ Check the Transmission Control Module (TCM) connector and the power /ground circuits to the Transmission Control Module. Clear the DTC and retest. If the problem persists, renew the Transmission Control Module (TCM) as required. Refer to the Warranty Policy and Procedures manual, or determine if any prior approval programme is in operation, prior to the installation of a new module/component

P0748-13	Pressure Control Solenoid A Electrical - Circuit open	■ Pressure control solenoid A circuit, open circuit	■ Check the Transmission Control Module (TCM) connector and the power /ground circuits to the Transmission Control Module. Clear the DTC and retest. If the problem persists, renew the Transmission Control Module (TCM) as required. Refer to the Warranty Policy and Procedures manual, or determine if any prior approval programme is in operation, prior to the installation of a new module/component
P0748-14	Pressure Control Solenoid A Electrical - Circuit short to ground or open	■ Pressure control solenoid A circuit, short circuit to ground, open circuit, high resistance	■ Check the Transmission Control Module (TCM) connector and the power /ground circuits to the Transmission Control Module. Clear the DTC and retest. If the problem persists, renew the Transmission Control Module (TCM) as required. Refer to the Warranty Policy and Procedures manual, or determine if any prior approval programme is in operation, prior to the installation of a new module/component
P076F-07	Gear 7 Ratio Incorrect - Mechanical failures	■ Mechanical failures	■ Check the transmission oil level and quality, refer to the relevant section of the workshop manual. Clear the DTC and test drive the vehicle. Clear the DTC and retest. If the problem persists, renew the transmission. Refer to the Warranty Policy and Procedures manual, or determine if any prior approval programme is in operation, prior to the installation of a new module/component
P077E-02	Transmission Fluid Temperature Measurement System - Multiple Sensor Correlation - General signal failure	■ General signal failure	■ Check the Transmission Control Module (TCM) connector and the power /ground circuits to the Transmission Control Module. Clear the DTC and retest. If the problem persists, renew the Transmission Control Module (TCM) as required. Refer to the Warranty Policy and Procedures manual, or determine if any prior approval programme is in operation, prior to the installation of a new module/component
P0780-62	Shift Malfunction - Signal compare	■ Signal compare failure	■ Check the Transmission Control Module (TCM) connector and the power /ground circuits to the Transmission Control Module. Clear the DTC and retest. If the problem persists, renew the Transmission Control Module

	failure		(TCM) as required. Refer to the Warranty Policy and Procedures manual, or determine if any prior approval programme is in operation, prior to the installation of a new module/component
P0780-93	Shift Malfunction - No operation	■ Internal failure	■ Check the Transmission Control Module (TCM) connector and the power /ground circuits to the Transmission Control Module. Clear the DTC and retest. If the problem persists, renew the Transmission Control Module (TCM) as required. Refer to the Warranty Policy and Procedures manual, or determine if any prior approval programme is in operation, prior to the installation of a new module/component
P0780-94	Shift Malfunction - Unexpected operation	■ Internal failure	■ Check the Transmission Control Module (TCM) connector and the power /ground circuits to the Transmission Control Module. Clear the DTC and retest. If the problem persists, renew the Transmission Control Module (TCM) as required. Refer to the Warranty Policy and Procedures manual, or determine if any prior approval programme is in operation, prior to the installation of a new module/component
P0795-04	Pressure Control Solenoid C - System Internal Failures	■ Internal failure	■ Check the Transmission Control Module (TCM) connector and the power /ground circuits to the Transmission Control Module. Clear the DTC and retest. If the problem persists, renew the Transmission Control Module (TCM) as required. Refer to the Warranty Policy and Procedures manual, or determine if any prior approval programme is in operation, prior to the installation of a new module/component
P07AD-07	Transmission Friction Element "F" Stuck On - Mechanical failures	■ Mechanical failures	■ Check the Transmission Control Module (TCM) connector and the power /ground circuits to the Transmission Control Module. Clear the DTC and retest. If the problem persists, renew the Transmission Control Module (TCM) as required. Refer to the Warranty Policy and Procedures manual, or determine if any prior approval programme is in operation, prior to the installation of a new module/component

P07D9-07	Gear 8 Incorrect Ratio - Mechanical failures	■ Mechanical failures	■ Check the transmission oil level and quality, refer to the relevant section of the workshop manual. Clear the DTC and test drive the vehicle. Clear the DTC and retest. If the problem persists, renew the transmission. Refer to the Warranty Policy and Procedures manual, or determine if any prior approval programme is in operation, prior to the installation of a new module/component
P07DC-07	Incorrect Shift from Gear 1 - Mechanical failures	■ Mechanical failures	■ Check the transmission oil level and quality, refer to the relevant section of the workshop manual. Clear the DTC and test drive the vehicle. Clear the DTC and retest. If the problem persists, renew the transmission. Refer to the Warranty Policy and Procedures manual, or determine if any prior approval programme is in operation, prior to the installation of a new module/component
P07DD-07	Incorrect Shift from Gear 2 - Mechanical failures	■ Mechanical failures	■ Check the transmission oil level and quality, refer to the relevant section of the workshop manual. Clear the DTC and test drive the vehicle. Clear the DTC and retest. If the problem persists, renew the transmission. Refer to the Warranty Policy and Procedures manual, or determine if any prior approval programme is in operation, prior to the installation of a new module/component
P07DE-07	Incorrect Shift from Gear 3 - Mechanical failures	■ Mechanical failures	■ Check the transmission oil level and quality, refer to the relevant section of the workshop manual. Clear the DTC and test drive the vehicle. Clear the DTC and retest. If the problem persists, renew the transmission. Refer to the Warranty Policy and Procedures manual, or determine if any prior approval programme is in operation, prior to the installation of a new module/component
P07DF-07	Incorrect Shift from Gear 4 - Mechanical failures	■ Mechanical failures	■ Check the transmission oil level and quality, refer to the relevant section of the workshop manual. Clear the DTC and test drive the vehicle. Clear the DTC and retest. If the problem persists, renew the transmission. Refer to

			the Warranty Policy and Procedures manual, or determine if any prior approval programme is in operation, prior to the installation of a new module/component
P07E0-07	Incorrect Shift from Gear 5 - Mechanical failures	■ Mechanical failures	■ Check the transmission oil level and quality, refer to the relevant section of the workshop manual. Clear the DTC and test drive the vehicle. Clear the DTC and retest. If the problem persists, renew the transmission. Refer to the Warranty Policy and Procedures manual, or determine if any prior approval programme is in operation, prior to the installation of a new module/component
P07E1-07	Incorrect Shift from Gear 6 - Mechanical failures	■ Mechanical failures	■ Check the transmission oil level and quality, refer to the relevant section of the workshop manual. Clear the DTC and test drive the vehicle. Clear the DTC and retest. If the problem persists, renew the transmission. Refer to the Warranty Policy and Procedures manual, or determine if any prior approval programme is in operation, prior to the installation of a new module/component
P07E2-07	Incorrect Shift from Gear 7 - Mechanical failures	■ Mechanical failures	■ Check the transmission oil level and quality, refer to the relevant section of the workshop manual. Clear the DTC and test drive the vehicle. Clear the DTC and retest. If the problem persists, renew the transmission. Refer to the Warranty Policy and Procedures manual, or determine if any prior approval programme is in operation, prior to the installation of a new module/component
P07E3-07	Incorrect Shift from Gear 8 - Mechanical failures	■ Mechanical failures	■ Check the transmission oil level and quality, refer to the relevant section of the workshop manual. Clear the DTC and test drive the vehicle. Clear the DTC and retest. If the problem persists, renew the transmission. Refer to the Warranty Policy and Procedures manual, or determine if any prior approval programme is in operation, prior to the installation of a new module/component

P0801-94	Reverse Inhibit Control Circuit - Unexpected operation	■ Reverse inhibit control circuit unexpected operation	■ Check the Transmission Control Module (TCM) connector and the power /ground circuits to the Transmission Control Module. Clear the DTC and retest. If the problem persists, renew the Transmission Control Module (TCM) as required. Refer to the Warranty Policy and Procedures manual, or determine if any prior approval programme is in operation, prior to the installation of a new module/component
P0810-04	Clutch Position Control Error - System Internal Failures	■ Internal failure	■ Clear DTCs and test drive the vehicle. Ensure the displayed position matches the engaged gear ■ Check and install a new Transmission Control Module (TCM) as required. Refer to the Warranty Policy and Procedures manual, or determine if any prior approval programme is in operation, prior to the installation of a new module/component
P0826-01	Up and Down Switch Circuit - General Electrical Failure	■ Tip switch electrical fault or harness fault	■ Refer to the electrical circuit diagrams and check the circuit between the command shift switch and the Transmission Control Module. Check the switch operation of the Transmission Shift Selector
P0826-2A	Up and Down Switch Circuit - Signal stuck in range	■ Tip switch electrical fault or harness fault	■ Refer to the electrical circuit diagrams and check the circuit between the command shift switch and the Transmission Control Module. Check the switch operation of the Transmission Shift Selector
P0826-64	Up and Down Switch Circuit - Signal plausibility failure	■ Tip switch electrical fault or harness fault	■ Refer to the electrical circuit diagrams and check the circuit between the command shift switch and the Transmission Control Module. Check the switch operation of the Transmission Shift Selector
P084F-11	Park / Neutral Switch Output Circuit - Circuit	■ Park / Neutral switch circuit short to ground	■ Check the Transmission Control Module (TCM) connector and the power /ground circuits to the Transmission Control Module. Clear the DTC and retest. If the problem persists, renew the Transmission Control Module

	short to ground		(TCM) as required. Refer to the Warranty Policy and Procedures manual, or determine if any prior approval programme is in operation, prior to the installation of a new module/component
P084F-12	Park / Neutral Switch Output Circuit - Circuit short to battery	■ Park / Neutral switch circuit short to power	■ Check the Transmission Control Module (TCM) connector and the power /ground circuits to the Transmission Control Module. Clear the DTC and retest. If the problem persists, renew the Transmission Control Module (TCM) as required. Refer to the Warranty Policy and Procedures manual, or determine if any prior approval programme is in operation, prior to the installation of a new module/component
P084F-13	Park / Neutral Switch Output Circuit - Circuit open	■ Park / Neutral switch circuit open circuit	■ Check the Transmission Control Module (TCM) connector and the power /ground circuits to the Transmission Control Module. Clear the DTC and retest. If the problem persists, renew the Transmission Control Module (TCM) as required. Refer to the Warranty Policy and Procedures manual, or determine if any prior approval programme is in operation, prior to the installation of a new module/component
P084F-14	Park / Neutral Switch Output Circuit - Circuit short to ground or open	■ Park / Neutral switch circuit short to ground, open circuit	■ Check the Transmission Control Module (TCM) connector and the power /ground circuits to the Transmission Control Module. Clear the DTC and retest. If the problem persists, renew the Transmission Control Module (TCM) as required. Refer to the Warranty Policy and Procedures manual, or determine if any prior approval programme is in operation, prior to the installation of a new module/component
P084F-29	Park / Neutral Switch Output Circuit - Signal invalid	■ Park / Neutral switch output circuit signal invalid	■ Check for correct output signal at transmission control module pin 1 to transmission plug (check in all positions). If the signal appears normal, then check wiring and connectors to the module. If no signal present, renew the Transmission Control Module (TCM) as required. Refer to the Warranty Policy and Procedures manual, or determine if any prior approval programme is in operation, prior to the installation of a new module /component

P0850-02	Park / Neutral Switch Output Circuit - General signal failure	■ Park / Neutral switch output circuit failure	■ Clear DTC and retest. Test drive the vehicle and check parklock mechanism by engaging and disengaging the parking lock several times. If fault persists, check parklock components and renew as required. If fault persists, check and install a new transmission control module as required. Refer to the warranty policy and procedures manual, or determine if any prior approval programme is in operation, prior to the installation of a new module/component
P0850-29	Park / Neutral Switch Input Circuit - Signal invalid	■ Starter inhibit signal invalid	■ Clear DTC and retest. Test drive the vehicle and check parklock mechanism by engaging and disengaging the parking lock several times. If fault persists, check parklock components and renew as required. If fault persists, check and install a new transmission control module as required. Refer to the warranty policy and procedures manual, or determine if any prior approval programme is in operation, prior to the installation of a new module/component
P0851-01	Park / Neutral Switch Input Circuit Low - General electrical failure	■ Switch input circuit general signal failure	■ Clear DTC and retest. Test drive the vehicle and check parklock mechanism by engaging and disengaging the parking lock several times. If fault persists, check parklock components and renew as required. If fault persists, check and install a new transmission control module as required. Refer to the warranty policy and procedures manual, or determine if any prior approval programme is in operation, prior to the installation of a new module/component
P0852-01	Park / Neutral Switch Input Circuit High - General electrical failure	■ Switch input circuit general signal failure	■ Clear DTC and retest. Test drive the vehicle and check parklock mechanism by engaging and disengaging the parking lock several times. If fault persists, check parklock components and renew as required. If fault persists, check and install a new transmission control module as required. Refer to the warranty policy and procedures manual, or determine if any prior approval programme is in operation, prior to the installation of a new module/component

P0942-07	Hydraulic Pressure Unit - Mechanical failures	**NOTE:** This DTC is only active with vehicles fitted with stop/start functionality ■ Mechanical failures	■ Check the transmission oil level and quality, refer to the relevant section of the workshop manual. Clear the DTC and test drive the vehicle. Clear the DTC and retest. If the problem persists, renew the transmission. Refer to the Warranty Policy and Procedures manual, or determine if any prior approval programme is in operation, prior to the installation of a new module/component
P0942-62	Hydraulic Pressure Unit - Signal compare failure	**NOTE:** This DTC is only active with vehicles fitted with stop/start functionality ■ Hydraulic pressure unit signal compare failure	■ Clear the DTC and retest. If the problem persists, renew the transmission control module as required. Refer to the warranty policy and procedures manual, or determine if any prior approval programme is in operation, prior to the installation of a new module/component
P0965-64	Pressure Control Solenoid B Control Circuit	■ Control circuit signal plausibility failure	■ Check the Transmission Control Module (TCM) connector and the power /ground circuits to the Transmission Control Module. Clear the DTC and retest. If the problem persists, renew the Transmission Control Module (TCM) as required. Refer to the Warranty Policy and Procedures manual, or

	Range /Performance - Signal plausibility failure		determine if any prior approval programme is in operation, prior to the installation of a new module/component
P0965-93	Pressure Control Solenoid B Control Circuit Range /Performance - No operation	■ Control circuit no operation	■ Check the Transmission Control Module (TCM) connector and the power /ground circuits to the Transmission Control Module. Clear the DTC and retest. If the problem persists, renew the Transmission Control Module (TCM) as required. Refer to the Warranty Policy and Procedures manual, or determine if any prior approval programme is in operation, prior to the installation of a new module/component
P0965-94	Pressure Control Solenoid B Control Circuit Range /Performance - Unexpected operation	■ Control circuit unexpected operation	■ Check the Transmission Control Module (TCM) connector and the power /ground circuits to the Transmission Control Module. Clear the DTC and retest. If the problem persists, renew the Transmission Control Module (TCM) as required. Refer to the Warranty Policy and Procedures manual, or determine if any prior approval programme is in operation, prior to the installation of a new module/component
P0966-11	Pressure Control Solenoid B Control Circuit Low - Circuit short to ground	■ Control circuit short circuit to ground	■ Check the Transmission Control Module (TCM) connector and the power /ground circuits to the Transmission Control Module. Clear the DTC and retest. If the problem persists, renew the Transmission Control Module (TCM) as required. Refer to the Warranty Policy and Procedures manual, or determine if any prior approval programme is in operation, prior to the installation of a new module/component
P0966-12	Pressure Control Solenoid B Control Circuit Low - Circuit short to battery	■ Control circuit short to power	■ Check the Transmission Control Module (TCM) connector and the power /ground circuits to the Transmission Control Module. Clear the DTC and retest. If the problem persists, renew the Transmission Control Module (TCM) as required. Refer to the Warranty Policy and Procedures manual, or determine if any prior approval programme is in operation, prior to the installation of a new module/component

P0966-14	Pressure Control Solenoid B Control Circuit Low - Circuit short to ground or open	■ Control circuit short circuit to ground or open circuit	■ Check the Transmission Control Module (TCM) connector and the power /ground circuits to the Transmission Control Module. Clear the DTC and retest. If the problem persists, renew the Transmission Control Module (TCM) as required. Refer to the Warranty Policy and Procedures manual, or determine if any prior approval programme is in operation, prior to the installation of a new module/component
P0972-13	Shift Solenoid A Control Circuit Range /Performance - Circuit open	■ Control circuit open circuit	■ Check the Transmission Control Module (TCM) connector and the power /ground circuits to the Transmission Control Module. Clear the DTC and retest. If the problem persists, renew the Transmission Control Module (TCM) as required. Refer to the Warranty Policy and Procedures manual, or determine if any prior approval programme is in operation, prior to the installation of a new module/component
P0972-64	Shift Solenoid A Control Circuit Range /Performance - Signal plausibility failure	■ Control circuit signal plausibility failure	■ Check the Transmission Control Module (TCM) connector and the power /ground circuits to the Transmission Control Module. Clear the DTC and retest. If the problem persists, renew the Transmission Control Module (TCM) as required. Refer to the Warranty Policy and Procedures manual, or determine if any prior approval programme is in operation, prior to the installation of a new module/component
P0972-93	Shift Solenoid A Control Circuit Range /Performance - No operation	■ Control circuit no operation	■ Check the Transmission Control Module (TCM) connector and the power /ground circuits to the Transmission Control Module. Clear the DTC and retest. If the problem persists, renew the Transmission Control Module (TCM) as required. Refer to the Warranty Policy and Procedures manual, or determine if any prior approval programme is in operation, prior to the installation of a new module/component
P0972-94	Shift Solenoid A Control Circuit Range	■ Control circuit unexpected operation	■ Check the Transmission Control Module (TCM) connector and the power /ground circuits to the Transmission Control Module. Clear the DTC and retest. If the problem persists, renew the Transmission Control Module

	/Performance - Unexpected operation		(TCM) as required. Refer to the Warranty Policy and Procedures manual, or determine if any prior approval programme is in operation, prior to the installation of a new module/component
P0973-11	Shift Solenoid A Control Circuit Low - Circuit short to ground	■ Shift solenoid circuit short to ground	■ Check the Transmission Control Module (TCM) connector and the power /ground circuits to the Transmission Control Module. Clear the DTC and retest. If the problem persists, renew the Transmission Control Module (TCM) as required. Refer to the Warranty Policy and Procedures manual, or determine if any prior approval programme is in operation, prior to the installation of a new module/component
P0973-14	Shift Solenoid A Control Circuit Low - Circuit short to ground or open	■ Shift solenoid circuit short to ground, open circuit, high resistance	■ Check the Transmission Control Module (TCM) connector and the power /ground circuits to the Transmission Control Module. Clear the DTC and retest. If the problem persists, renew the Transmission Control Module (TCM) as required. Refer to the Warranty Policy and Procedures manual, or determine if any prior approval programme is in operation, prior to the installation of a new module/component
P0973-18	Shift Solenoid A Control Circuit Low - Circuit current below threshold	■ Control circuit current below threshold	■ Check the Transmission Control Module (TCM) connector and the power /ground circuits to the Transmission Control Module. Clear the DTC and retest. If the problem persists, renew the Transmission Control Module (TCM) as required. Refer to the Warranty Policy and Procedures manual, or determine if any prior approval programme is in operation, prior to the installation of a new module/component
P0974-12	Shift Solenoid A Control Circuit High - Circuit short to battery	■ Control circuit short to battery	■ Check the Transmission Control Module (TCM) connector and the power /ground circuits to the Transmission Control Module. Clear the DTC and retest. If the problem persists, renew the Transmission Control Module (TCM) as required. Refer to the Warranty Policy and Procedures manual, or determine if any prior approval programme is in operation, prior to the installation of a new module/component

P0974-19	Shift Solenoid A Control Circuit High - Circuit current above threshold	■ Control circuit current above threshold	■ Check the Transmission Control Module (TCM) connector and the power /ground circuits to the Transmission Control Module. Clear the DTC and retest. If the problem persists, renew the Transmission Control Module (TCM) as required. Refer to the Warranty Policy and Procedures manual, or determine if any prior approval programme is in operation, prior to the installation of a new module/component
P0975-13	Shift Solenoid B Control Circuit Range /Performance - Circuit open	■ Control circuit open	■ Check the Transmission Control Module (TCM) connector and the power /ground circuits to the Transmission Control Module. Clear the DTC and retest. If the problem persists, renew the Transmission Control Module (TCM) as required. Refer to the Warranty Policy and Procedures manual, or determine if any prior approval programme is in operation, prior to the installation of a new module/component
P0975-64	Shift Solenoid B Control Circuit Range /Performance - Signal plausibility failure	■ Control circuit signal plausibility failure	■ Check the Transmission Control Module (TCM) connector and the power /ground circuits to the Transmission Control Module. Clear the DTC and retest. If the problem persists, renew the Transmission Control Module (TCM) as required. Refer to the Warranty Policy and Procedures manual, or determine if any prior approval programme is in operation, prior to the installation of a new module/component
P0975-93	Shift Solenoid B Control Circuit Range /Performance - No operation	■ Control circuit no operation	■ Check the Transmission Control Module (TCM) connector and the power /ground circuits to the Transmission Control Module. Clear the DTC and retest. If the problem persists, renew the Transmission Control Module (TCM) as required. Refer to the Warranty Policy and Procedures manual, or determine if any prior approval programme is in operation, prior to the installation of a new module/component
P0975-94	Shift Solenoid B Control Circuit Range	■ Control circuit unexpected operation	■ Check the Transmission Control Module (TCM) connector and the power /ground circuits to the Transmission Control Module. Clear the DTC and retest. If the problem persists, renew the Transmission Control Module

	/Performance - Unexpected operation		(TCM) as required. Refer to the Warranty Policy and Procedures manual, or determine if any prior approval programme is in operation, prior to the installation of a new module/component
P0976-11	Shift Solenoid B Control Circuit Low - Circuit short to ground	■ Control circuit short to ground	■ Check the Transmission Control Module (TCM) connector and the power /ground circuits to the Transmission Control Module. Clear the DTC and retest. If the problem persists, renew the Transmission Control Module (TCM) as required. Refer to the Warranty Policy and Procedures manual, or determine if any prior approval programme is in operation, prior to the installation of a new module/component
P0976-14	Shift Solenoid B Control Circuit Low - Circuit short to ground or open	■ Control circuit short to ground, open circuit, high resistance	■ Check the Transmission Control Module (TCM) connector and the power /ground circuits to the Transmission Control Module. Clear the DTC and retest. If the problem persists, renew the Transmission Control Module (TCM) as required. Refer to the Warranty Policy and Procedures manual, or determine if any prior approval programme is in operation, prior to the installation of a new module/component
P0976-18	Shift Solenoid B Control Circuit Low - Circuit current below threshold	■ Control circuit current below threshold	■ Check the Transmission Control Module (TCM) connector and the power /ground circuits to the Transmission Control Module. Clear the DTC and retest. If the problem persists, renew the Transmission Control Module (TCM) as required. Refer to the Warranty Policy and Procedures manual, or determine if any prior approval programme is in operation, prior to the installation of a new module/component
P0977-12	Shift Solenoid B Control Circuit High - Circuit short to battery	■ Control circuit short to power	■ Check the Transmission Control Module (TCM) connector and the power /ground circuits to the Transmission Control Module. Clear the DTC and retest. If the problem persists, renew the Transmission Control Module (TCM) as required. Refer to the Warranty Policy and Procedures manual, or determine if any prior approval programme is in operation, prior to the installation of a new module/component

P0977-19	Shift Solenoid B Control Circuit High - Circuit current above threshold	■ Control circuit current above threshold	■ Check the Transmission Control Module (TCM) connector and the power /ground circuits to the Transmission Control Module. Clear the DTC and retest. If the problem persists, renew the Transmission Control Module (TCM) as required. Refer to the Warranty Policy and Procedures manual, or determine if any prior approval programme is in operation, prior to the installation of a new module/component
P0978-21	Shift Solenoid C Control Circuit Range /Performance - Signal amplitude < minimum	■ Control circuit signal amplitude < minimum	■ Check the Transmission Control Module (TCM) connector and the power /ground circuits to the Transmission Control Module. Clear the DTC and retest. If the problem persists, renew the Transmission Control Module (TCM) as required. Refer to the Warranty Policy and Procedures manual, or determine if any prior approval programme is in operation, prior to the installation of a new module/component
P0978-64	Shift Solenoid C Control Circuit Range /Performance - Signal plausibility failure	■ Control circuit signal plausibility failure	■ Check the Transmission Control Module (TCM) connector and the power /ground circuits to the Transmission Control Module. Clear the DTC and retest. If the problem persists, renew the Transmission Control Module (TCM) as required. Refer to the Warranty Policy and Procedures manual, or determine if any prior approval programme is in operation, prior to the installation of a new module/component
P0978-93	Shift Solenoid C Control Circuit Range /Performance - No operation	■ Control circuit no operation	■ Check the Transmission Control Module (TCM) connector and the power /ground circuits to the Transmission Control Module. Clear the DTC and retest. If the problem persists, renew the Transmission Control Module (TCM) as required. Refer to the Warranty Policy and Procedures manual, or determine if any prior approval programme is in operation, prior to the installation of a new module/component
P0978-94	Shift Solenoid C Control Circuit Range	■ Control circuit unexpected operation	■ Check the Transmission Control Module (TCM) connector and the power /ground circuits to the Transmission Control Module. Clear the DTC and retest. If the problem persists, renew the Transmission Control Module

	/Performance - Unexpected operation		(TCM) as required. Refer to the Warranty Policy and Procedures manual, or determine if any prior approval programme is in operation, prior to the installation of a new module/component
P0979-11	Shift Solenoid C Control Circuit Low - Circuit short to ground	■ Control circuit short to ground	■ Check the Transmission Control Module (TCM) connector and the power /ground circuits to the Transmission Control Module. Clear the DTC and retest. If the problem persists, renew the Transmission Control Module (TCM) as required. Refer to the Warranty Policy and Procedures manual, or determine if any prior approval programme is in operation, prior to the installation of a new module/component
P0979-14	Shift Solenoid C Control Circuit Low - Circuit short to ground or open	■ Control circuit short to ground or open	■ Check the Transmission Control Module (TCM) connector and the power /ground circuits to the Transmission Control Module. Clear the DTC and retest. If the problem persists, renew the Transmission Control Module (TCM) as required. Refer to the Warranty Policy and Procedures manual, or determine if any prior approval programme is in operation, prior to the installation of a new module/component
P0980-12	Shift Solenoid C Control Circuit High - Circuit short to battery	■ Control circuit short to power	■ Check the Transmission Control Module (TCM) connector and the power /ground circuits to the Transmission Control Module. Clear the DTC and retest. If the problem persists, renew the Transmission Control Module (TCM) as required. Refer to the Warranty Policy and Procedures manual, or determine if any prior approval programme is in operation, prior to the installation of a new module/component
P0980-19	Shift Solenoid C Control Circuit High - Circuit current above threshold	■ Control circuit current above threshold	■ Check the Transmission Control Module (TCM) connector and the power /ground circuits to the Transmission Control Module. Clear the DTC and retest. If the problem persists, renew the Transmission Control Module (TCM) as required. Refer to the Warranty Policy and Procedures manual, or determine if any prior approval programme is in operation, prior to the installation of a new module/component

P0981-64	Shift Solenoid D Control Circuit Range /Performance - Signal plausibility failure	■ Control circuit signal plausibility failure	■ Check the Transmission Control Module (TCM) connector and the power /ground circuits to the Transmission Control Module. Clear the DTC and retest. If the problem persists, renew the Transmission Control Module (TCM) as required. Refer to the Warranty Policy and Procedures manual, or determine if any prior approval programme is in operation, prior to the installation of a new module/component
P0981-93	Shift Solenoid D Control Circuit Range /Performance - No operation	■ Control circuit no operation	■ Check the Transmission Control Module (TCM) connector and the power /ground circuits to the Transmission Control Module. Clear the DTC and retest. If the problem persists, renew the Transmission Control Module (TCM) as required. Refer to the Warranty Policy and Procedures manual, or determine if any prior approval programme is in operation, prior to the installation of a new module/component
P0981-94	Shift Solenoid D Control Circuit Range /Performance - Unexpected operation	■ Control circuit unexpected operation	■ Check the Transmission Control Module (TCM) connector and the power /ground circuits to the Transmission Control Module. Clear the DTC and retest. If the problem persists, renew the Transmission Control Module (TCM) as required. Refer to the Warranty Policy and Procedures manual, or determine if any prior approval programme is in operation, prior to the installation of a new module/component
P0982-11	Shift Solenoid D Control Circuit Low - Circuit short to ground	■ Control circuit short to ground	■ Check the Transmission Control Module (TCM) connector and the power /ground circuits to the Transmission Control Module. Clear the DTC and retest. If the problem persists, renew the Transmission Control Module (TCM) as required. Refer to the Warranty Policy and Procedures manual, or determine if any prior approval programme is in operation, prior to the installation of a new module/component
P0982-14	Shift Solenoid D Control Circuit Low - Circuit short to ground or open	■ Control circuit short to ground or open	■ Check the Transmission Control Module (TCM) connector and the power /ground circuits to the Transmission Control Module. Clear the DTC and retest. If the problem persists, renew the Transmission Control Module

			(TCM) as required. Refer to the Warranty Policy and Procedures manual, or determine if any prior approval programme is in operation, prior to the installation of a new module/component
P0982-18	Shift Solenoid D Control Circuit Low - Circuit current below threshold	■ Control circuit current below threshold	■ Check the Transmission Control Module (TCM) connector and the power /ground circuits to the Transmission Control Module. Clear the DTC and retest. If the problem persists, renew the Transmission Control Module (TCM) as required. Refer to the Warranty Policy and Procedures manual, or determine if any prior approval programme is in operation, prior to the installation of a new module/component
P0983-12	Shift Solenoid D Control Circuit High - Circuit short to battery	■ Control circuit short to power	■ Check the Transmission Control Module (TCM) connector and the power /ground circuits to the Transmission Control Module. Clear the DTC and retest. If the problem persists, renew the Transmission Control Module (TCM) as required. Refer to the Warranty Policy and Procedures manual, or determine if any prior approval programme is in operation, prior to the installation of a new module/component
P0983-19	Shift Solenoid D Control Circuit High - Circuit current above threshold	■ Control circuit current above threshold	■ Check the Transmission Control Module (TCM) connector and the power /ground circuits to the Transmission Control Module. Clear the DTC and retest. If the problem persists, renew the Transmission Control Module (TCM) as required. Refer to the Warranty Policy and Procedures manual, or determine if any prior approval programme is in operation, prior to the installation of a new module/component
P0984-64	Shift Solenoid E Control Circuit Range /Performance - Signal plausibility failure	■ Control circuit signal plausibility failure	■ Check the Transmission Control Module (TCM) connector and the power /ground circuits to the Transmission Control Module. Clear the DTC and retest. If the problem persists, renew the Transmission Control Module (TCM) as required. Refer to the Warranty Policy and Procedures manual, or determine if any prior approval programme is in operation, prior to the installation of a new module/component

P0984-93	Shift Solenoid E Control Circuit Range /Performance - No operation	■ Control circuit no operation	■ Check the Transmission Control Module (TCM) connector and the power /ground circuits to the Transmission Control Module. Clear the DTC and retest. If the problem persists, renew the Transmission Control Module (TCM) as required. Refer to the Warranty Policy and Procedures manual, or determine if any prior approval programme is in operation, prior to the installation of a new module/component
P0984-94	Shift Solenoid E Control Circuit Range /Performance - Unexpected operation	■ Control circuit unexpected operation	■ Check the Transmission Control Module (TCM) connector and the power /ground circuits to the Transmission Control Module. Clear the DTC and retest. If the problem persists, renew the Transmission Control Module (TCM) as required. Refer to the Warranty Policy and Procedures manual, or determine if any prior approval programme is in operation, prior to the installation of a new module/component
P0985-11	Shift Solenoid E Control Circuit Low - Circuit short to ground	■ Control circuit short to ground	■ Check the Transmission Control Module (TCM) connector and the power /ground circuits to the Transmission Control Module. Clear the DTC and retest. If the problem persists, renew the Transmission Control Module (TCM) as required. Refer to the Warranty Policy and Procedures manual, or determine if any prior approval programme is in operation, prior to the installation of a new module/component
P0985-14	Shift Solenoid E Control Circuit Low - Circuit short to ground or open	■ Control circuit short to ground or open	■ Check the Transmission Control Module (TCM) connector and the power /ground circuits to the Transmission Control Module. Clear the DTC and retest. If the problem persists, renew the Transmission Control Module (TCM) as required. Refer to the Warranty Policy and Procedures manual, or determine if any prior approval programme is in operation, prior to the installation of a new module/component
P0985-18	Shift Solenoid E Control Circuit Low - Circuit current below threshold	■ Control circuit current below threshold	■ Check the Transmission Control Module (TCM) connector and the power /ground circuits to the Transmission Control Module. Clear the DTC and retest. If the problem persists, renew the Transmission Control Module

			(TCM) as required. Refer to the Warranty Policy and Procedures manual, or determine if any prior approval programme is in operation, prior to the installation of a new module/component
P0986-12	Shift Solenoid E Control Circuit High - Circuit short to battery	■ Control circuit short to power	■ Check the Transmission Control Module (TCM) connector and the power /ground circuits to the Transmission Control Module. Clear the DTC and retest. If the problem persists, renew the Transmission Control Module (TCM) as required. Refer to the Warranty Policy and Procedures manual, or determine if any prior approval programme is in operation, prior to the installation of a new module/component
P0986-19	Shift Solenoid E Control Circuit High - Circuit current above threshold	■ Control circuit current above threshold	■ Check the Transmission Control Module (TCM) connector and the power /ground circuits to the Transmission Control Module. Clear the DTC and retest. If the problem persists, renew the Transmission Control Module (TCM) as required. Refer to the Warranty Policy and Procedures manual, or determine if any prior approval programme is in operation, prior to the installation of a new module/component
P164C-62	Internal Control Module Start-Stop Performance - Signal compare failure	△ **NOTE:** This DTC is only active with vehicles fitted with stop/start functionality ■ Signal compare failure	■ Clear the DTC and retest. If the problem persists, renew the transmission control module as required. Refer to the warranty policy and procedures manual, or determine if any prior approval programme is in operation, prior to the installation of a new module/component

P1706-94	High Vehicle Speed Observed in Park - Unexpected operation	■ Unexpected operation	■ Check the Transmission Control Module (TCM) connector and the power /ground circuits to the Transmission Control Module. Clear the DTC and retest. If the problem persists, renew the Transmission Control Module (TCM) as required. Refer to the Warranty Policy and Procedures manual, or determine if any prior approval programme is in operation, prior to the installation of a new module/component
P1707-07	Transfer Case Neutral or Park /Neutral Indication Circuit - Mechanical failures	■ Mechanical failures, park pawl fault	■ Ensure that emergency park release has not been pulled and is not sticking ■ Clear DTC. Test drive the vehicle, engaging and disengaging the parking lock several times. If the fault persists renew the park pawl as required
P1707-72	Transfer Case Neutral or Park /Neutral Indication Circuit - Actuator stuck open	■ Actuator stuck open	■ Ensure that emergency park release has not been pulled and is not sticking ■ Clear DTC. Test drive the vehicle, engaging and disengaging the parking lock several times. If the fault persists renew the park pawl as required
P1707-77	Transfer Case Neutral or Park /Neutral Indication Circuit - Commanded position not reachable	■ Commanded position not reachable	■ Ensure that emergency park release has not been pulled and is not sticking ■ Clear DTC. Test drive the vehicle, engaging and disengaging the parking lock several times. If the fault persists renew the park pawl as required
P177A-07	Transmission Friction	■ Mechanical failures	■ Check the transmission oil level and quality, refer to the relevant section of the workshop manual. Clear the DTC and test drive the vehicle. If the problem persists, renew the transmission as required. Refer to the Warranty Policy and Procedures manual, or determine if any prior approval

	Element A or B - Mechanical Failures		programme is in operation, prior to the installation of a new module /component
P177B-07	Transmission Friction Element A or C - Mechanical Failures	■ Mechanical failures	■ Check the transmission oil level and quality, refer to the relevant section of the workshop manual. Clear the DTC and test drive the vehicle. If the problem persists, renew the transmission as required. Refer to the Warranty Policy and Procedures manual, or determine if any prior approval programme is in operation, prior to the installation of a new module /component
P177C-07	Transmission Friction Element A or D - Mechanical Failures	■ Mechanical failures	■ Check the transmission oil level and quality, refer to the relevant section of the workshop manual. Clear the DTC and test drive the vehicle. If the problem persists, renew the transmission as required. Refer to the Warranty Policy and Procedures manual, or determine if any prior approval programme is in operation, prior to the installation of a new module /component
P177D-07	Transmission Friction Element A or E - Mechanical Failures	■ Mechanical failures	■ Check the transmission oil level and quality, refer to the relevant section of the workshop manual. Clear the DTC and test drive the vehicle. If the problem persists, renew the transmission as required. Refer to the Warranty Policy and Procedures manual, or determine if any prior approval programme is in operation, prior to the installation of a new module /component
P177E-07	Transmission Friction Element B or C - Mechanical Failures	■ Mechanical failures	■ Check the transmission oil level and quality, refer to the relevant section of the workshop manual. Clear the DTC and test drive the vehicle. If the problem persists, renew the transmission as required. Refer to the Warranty Policy and Procedures manual, or determine if any prior approval programme is in operation, prior to the installation of a new module /component
P177F-	Transmission		

07	Friction Element B or D - Mechanical Failures	■ Mechanical failures	■ Check the transmission oil level and quality, refer to the relevant section of the workshop manual. Clear the DTC and test drive the vehicle. If the problem persists, renew the transmission as required. Refer to the Warranty Policy and Procedures manual, or determine if any prior approval programme is in operation, prior to the installation of a new module /component
P178A-07	Transmission Friction Element B or E - Mechanical Failures	■ Mechanical failures	■ Check the transmission oil level and quality, refer to the relevant section of the workshop manual. Clear the DTC and test drive the vehicle. If the problem persists, renew the transmission as required. Refer to the Warranty Policy and Procedures manual, or determine if any prior approval programme is in operation, prior to the installation of a new module /component
P178B-07	Transmission Friction Element C or D - Mechanical Failures	■ Mechanical failures	■ Check the transmission oil level and quality, refer to the relevant section of the workshop manual. Clear the DTC and test drive the vehicle. If the problem persists, renew the transmission as required. Refer to the Warranty Policy and Procedures manual, or determine if any prior approval programme is in operation, prior to the installation of a new module /component
P178C-07	Transmission Friction Element C or E - Mechanical Failures	■ Mechanical failures	■ Check the transmission oil level and quality, refer to the relevant section of the workshop manual. Clear the DTC and test drive the vehicle. If the problem persists, renew the transmission as required. Refer to the Warranty Policy and Procedures manual, or determine if any prior approval programme is in operation, prior to the installation of a new module /component
P178D-07	Transmission Friction	■ Mechanical failures	■ Check the transmission oil level and quality, refer to the relevant section of the workshop manual. Clear the DTC and test drive the vehicle. If the problem persists, renew the transmission as required. Refer to the Warranty Policy and Procedures manual, or determine if any prior approval

	Element D or E - Mechanical Failures		programme is in operation, prior to the installation of a new module /component
P2159-02	Vehicle Speed Sensor B Range /Performance - General signal failure	■ General signal failure	■ Check for related Anti-lock Braking System (ABS) DTCs and refer to the relevant DTC index
P215B-62	Vehicle Speed / Output Shaft Speed Correlation - Signal compare failure	■ Signal compare failure	■ Check Anti-lock Braking System (ABS) DTCs and refer to the relevant DTC index
P258F-02	Torque Management Request Output Signal - General signal failure	■ General signal failure	■ Clear DTC and retest. If fault persists, check and install a new Transmission Control Module as required. Refer to the warranty policy and procedures manual, or determine if any prior approval programme is in operation, prior to the installation of a new module/component
P2700-07	Transmission Friction Element A Apply Time Range /Performance - Mechanical failures	■ Mechanical failures	■ Check the transmission oil level and quality, refer to the relevant section of the workshop manual. Clear the DTC and test drive the vehicle. If the problem persists, renew the transmission as required. Refer to the Warranty Policy and Procedures manual, or determine if any prior approval programme is in operation, prior to the installation of a new module /component
P2701-07	Transmission Friction Element B Apply Time	■ Mechanical failures	■ Check the transmission oil level and quality, refer to the relevant section of the workshop manual. Clear the DTC and test drive the vehicle. If the problem persists, renew the transmission as required. Refer to the Warranty Policy and Procedures manual, or determine if any prior approval

	Range /Performance - Mechanical failures		programme is in operation, prior to the installation of a new module /component
P2702-07	Transmission Friction Element C Apply Time Range /Performance - Mechanical failures	■ Mechanical failures	■ Check the transmission oil level and quality, refer to the relevant section of the workshop manual. Clear the DTC and test drive the vehicle. If the problem persists, renew the transmission as required. Refer to the Warranty Policy and Procedures manual, or determine if any prior approval programme is in operation, prior to the installation of a new module /component
P2703-07	Transmission Friction Element D Apply Time Range /Performance - Mechanical failures	■ Mechanical failures	■ Check the transmission oil level and quality, refer to the relevant section of the workshop manual. Clear the DTC and test drive the vehicle. If the problem persists, renew the transmission as required. Refer to the Warranty Policy and Procedures manual, or determine if any prior approval programme is in operation, prior to the installation of a new module /component
P2704-07	Transmission Friction Element E Apply Time Range /Performance - Mechanical failures	■ Mechanical failures	■ Check the transmission oil level and quality, refer to the relevant section of the workshop manual. Clear the DTC and test drive the vehicle. If the problem persists, renew the transmission as required. Refer to the Warranty Policy and Procedures manual, or determine if any prior approval programme is in operation, prior to the installation of a new module /component
P2711-94	Unexpected Mechanical Gear	■ Gear disengagement unexpected operation	■ Check the Transmission Control Module (TCM) connector and the power /ground circuits to the Transmission Control Module. Clear the DTC and retest. If the problem persists, renew the Transmission Control Module

	Disengagement - Unexpected operation		(TCM) as required. Refer to the Warranty Policy and Procedures manual, or determine if any prior approval programme is in operation, prior to the installation of a new module/component
P2713-04	Pressure Control Solenoid D - System Internal Failures	■ System internal failures	■ Check the Transmission Control Module (TCM) connector and the power /ground circuits to the Transmission Control Module. Clear the DTC and retest. If the problem persists, renew the Transmission Control Module (TCM) as required. Refer to the Warranty Policy and Procedures manual, or determine if any prior approval programme is in operation, prior to the installation of a new module/component
P2722-04	Pressure Control Solenoid E - System Internal Failures	■ System Internal Failures	■ Check the Transmission Control Module (TCM) connector and the power /ground circuits to the Transmission Control Module. Clear the DTC and retest. If the problem persists, renew the Transmission Control Module (TCM) as required. Refer to the Warranty Policy and Procedures manual, or determine if any prior approval programme is in operation, prior to the installation of a new module/component
P2757-93	Torque Converter Clutch Pressure Control Solenoid Control Circuit Perf or Stuck Off - No operation	■ Control solenoid control circuit no operation	■ Check the Transmission Control Module (TCM) connector and the power /ground circuits to the Transmission Control Module. Clear the DTC and retest. If the problem persists, renew the Transmission Control Module (TCM) as required. Refer to the Warranty Policy and Procedures manual, or determine if any prior approval programme is in operation, prior to the installation of a new module/component
P2757-94	Torque Converter Clutch Pressure Control Solenoid Control Circuit	■ Control circuit unexpected operation	■ Check the Transmission Control Module (TCM) connector and the power /ground circuits to the Transmission Control Module. Clear the DTC and retest. If the problem persists, renew the Transmission Control Module (TCM) as required. Refer to the Warranty Policy and Procedures manual, or determine if any prior approval programme is in operation, prior to the installation of a new module/component

	Perf or Stuck Off - Unexpected operation		
P2759-11	Torque Converter Clutch Pressure Control Solenoid Electrical - Circuit short to ground	■ Control solenoid circuit short to ground	■ Check the Transmission Control Module (TCM) connector and the power /ground circuits to the Transmission Control Module. Clear the DTC and retest. If the problem persists, renew the Transmission Control Module (TCM) as required. Refer to the Warranty Policy and Procedures manual, or determine if any prior approval programme is in operation, prior to the installation of a new module/component
P2759-12	Torque Converter Clutch Pressure Control Solenoid Electrical - Circuit short to battery	■ Control solenoid circuit short to power	■ Check the Transmission Control Module (TCM) connector and the power /ground circuits to the Transmission Control Module. Clear the DTC and retest. If the problem persists, renew the Transmission Control Module (TCM) as required. Refer to the Warranty Policy and Procedures manual, or determine if any prior approval programme is in operation, prior to the installation of a new module/component
P2759-14	Torque Converter Clutch Pressure Control Solenoid Electrical - Circuit short to ground or open	■ Control solenoid circuit short to ground, open circuit, high resistance	■ Check the Transmission Control Module (TCM) connector and the power /ground circuits to the Transmission Control Module. Clear the DTC and retest. If the problem persists, renew the Transmission Control Module (TCM) as required. Refer to the Warranty Policy and Procedures manual, or determine if any prior approval programme is in operation, prior to the installation of a new module/component
P2761-13	Torque Converter Clutch Pressure Control Solenoid	■ Control solenoid circuit open	■ Check the Transmission Control Module (TCM) connector and the power /ground circuits to the Transmission Control Module. Clear the DTC and retest. If the problem persists, renew the Transmission Control Module

	Control Circuit / Open - Circuit open		(TCM) as required. Refer to the Warranty Policy and Procedures manual, or determine if any prior approval programme is in operation, prior to the installation of a new module/component
P2762-64	Torque Converter Clutch Pressure Control Solenoid Control Circuit Range / Perf - Signal plausibility failure	■ Control circuit signal plausibility failure	■ Check the Transmission Control Module (TCM) connector and the power /ground circuits to the Transmission Control Module. Clear the DTC and retest. If the problem persists, renew the Transmission Control Module (TCM) as required. Refer to the Warranty Policy and Procedures manual, or determine if any prior approval programme is in operation, prior to the installation of a new module/component
P2784-02	Input / Turbine Speed Sensor A / B Correlation - General signal failure	■ Sensor general signal failure, multiple input speed signal faults	■ Check Engine Control Module (ECM) for related DTCs and refer to the relevant DTC index ■ Check Anti-lock Braking System (ABS) DTCs and refer to the relevant DTC index
P2787-4B	Clutch Temperature Too High - Over temperature	■ Clutch over temperature	■ Allow the transmission to cool, clear the DTC and retest. Check transmission oil level and check for excessive gear changes during normal driving. Check shift paddles for intermittent operation and renew as required. Refer to the warranty policy and procedures manual, or determine if any prior approval programme is in operation, prior to the installation of a new module/component
P2787-98	Clutch Temperature Too High - Component or system over temperature	■ Component or system over temperature	■ Allow the transmission to cool, clear the DTC and retest. Clear the DTC and retest. Check transmission oil level and check for excessive gear changes during normal driving. Check shift paddles for intermittent operation. Refer to the relevant section of the workshop manual and check the transmission oil level and quality. Clear the DTC and test drive the vehicle using all gears in drive and reverse. Clear the DTC and retest. If

			the problem persists, or if any other gear ratio related DTCs are logged, renew the transmission. Refer to the warranty policy and procedures manual, or determine if any prior approval programme is in operation, prior to the installation of a new module/component
P2793-92	Gear Shift Direction Circuit - Performance or incorrect operation	■ Gear shift direction circuit performance or incorrect operation	■ Check the Transmission Control Module (TCM) connector and the power /ground circuits to the Transmission Control Module. Clear the DTC and retest. If the problem persists, renew the Transmission Control Module (TCM) as required. Refer to the Warranty Policy and Procedures manual, or determine if any prior approval programme is in operation, prior to the installation of a new module/component
P2793-94	Gear Shift Direction Circuit - Unexpected operation	■ Gear shift direction circuit unexpected operation	■ Check the Transmission Control Module (TCM) connector and the power /ground circuits to the Transmission Control Module. Clear the DTC and retest. If the problem persists, renew the Transmission Control Module (TCM) as required. Refer to the Warranty Policy and Procedures manual, or determine if any prior approval programme is in operation, prior to the installation of a new module/component
P279D-02	Four Wheel Drive (4WD) Range Signal Circuit - General signal failure	■ General signal failure	■ Check Transfer Case Control Module (TCCM) DTCs and refer to the relevant DTC index
P279D-64	Four Wheel Drive (4WD) Range Signal Circuit - Signal plausibility failure	■ Signal plausibility failure	■ Check Transfer Case Control Module (TCCM) DTCs and refer to the relevant DTC index
U0001-	High Speed	■ CAN Bus off	

88	CAN Communication CAN Bus - Bus off		■ Check the powertrain control module and ABS module for other CAN Bus off DTCs and refer to the relevant DTC index. Refer to the electrical circuit diagrams and check the module connector and power/ground circuits. Refer to network communication section of the workshop manual. Using the manufacturers approved diagnostic system, complete a CAN integrity test. Check fuses, examine fuse-box for water ingress, moisture or loose plugs. Refer to the electrical circuit diagrams and connect an Ohm meter between the pins for CAN high and CAN low. If the resistance is 0 Ohm with a short circuit at CAN bus, renew the Transmission Control Module (TCM). If the resistance is infinite with open circuit at CAN bus, renew the Transmission Control Module (TCM). A correct resistance should be approximately 40kOhm
U0100-63	Lost Communication With ECM/PCM "A" - Circuit / component protection time-out	■ Circuit / component protection time-out ■ CAN signal error from Engine Control Module ■ CAN bus fault	■ Check for other CAN Bus codes. Refer to the electrical circuit diagrams and check the module connector and power/ground circuits. Refer to network communication section of the workshop manual. Using the manufacturers approved diagnostic system, complete a CAN integrity test
U0102-63	Lost Communication with Transfer Case Control Module - Circuit / component protection time-out	■ Circuit / component protection time-out ■ CAN signal error from Transfer Case Control Module ■ CAN bus fault	■ Check for other CAN Bus codes. Refer to the electrical circuit diagrams and check the module connector and power/ground circuits. Refer to network communication section of the workshop manual. Using the manufacturers approved diagnostic system, complete a CAN integrity test

U0103-63	Lost Communication With Gear Shift Control Module A - Circuit / component protection time-out	■ Circuit / component protection time-out ■ LIN signal error from Automatic Transmission Selector	■ Refer to the electrical circuit diagrams and check module connectors / LIN harness between Transmission Control Module (TCM) and Automatic Transmission Selector
U0121-63	Lost Communication With Anti-Lock Brake System (ABS) Control Module - Circuit / component protection time-out	■ Circuit / component protection time-out ■ CAN signal error from Anti-Lock Brake System ■ CAN bus fault	■ Check for other CAN Bus codes. Refer to the electrical circuit diagrams and check the module connector and power/ground circuits. Refer to network communication section of the workshop manual. Using the manufacturers approved diagnostic system, complete a CAN integrity test
U0126-63	Lost Communication With Steering Angle Sensor Module - Circuit / component protection time-out	■ Circuit / component protection time-out ■ CAN signal error from Steering Angle Sensor ■ CAN bus fault	■ Check for other CAN Bus codes. Refer to the electrical circuit diagrams and check the module connector and power/ground circuits. Refer to network communication section of the workshop manual. Using the manufacturers approved diagnostic system, complete a CAN integrity test
U0128-63	Lost Communication With Park		

	Brake Control Module - Circuit / component protection time-out	■ Circuit / component protection time-out ■ CAN signal error from Park Brake Control Module ■ CAN bus fault	■ Check for other CAN Bus codes. Refer to the electrical circuit diagrams and check the module connector and power/ground circuits. Refer to network communication section of the workshop manual. Using the manufacturers approved diagnostic system, complete a CAN integrity test
U0138-63	Lost Communication with All Terrain Control Module - Circuit / component protection time-out	■ Circuit / component protection time-out ■ CAN signal error from centre console switch pack ■ CAN bus fault	■ Check for other CAN Bus codes. Refer to the electrical circuit diagrams and check the module connector and power/ground circuits. Refer to network communication section of the workshop manual. Using the manufacturers approved diagnostic system, complete a CAN integrity test
U0140-63	Lost Communication With Body Control Module - Circuit / component protection time-out	■ Circuit / component protection time-out ■ CAN signal error from passenger compartment fuse box ■ CAN bus fault	■ Check for other CAN Bus codes. Refer to the electrical circuit diagrams and check the module connector and power/ground circuits. Refer to network communication section of the workshop manual. Using the manufacturers approved diagnostic system, complete a CAN integrity test.
U0300-	Internal		

57	Control Module Software Incompatibility - Invalid / incomplete software component	■ Invalid / incomplete software component	■ Check that the vehicle configuration is correctly set in the car configuration file using the manufacturer's approved diagnostic software. Check and update the Transmission Control Module (TCM) software version if necessary
U0401-02	Invalid Data Received from ECM/PCM A - General signal failure	■ General signal failure	■ Check Engine Control Module for related DTCs. Refer to the relevant section in the workshop manual
U0401-29	Invalid Data Received from ECM/PCM A - Signal invalid	■ Signal invalid ■ CAN signal error from Engine Control Module ■ CAN bus fault	■ Check for other CAN Bus codes. Refer to the electrical circuit diagrams and check the module connector and power/ground circuits. Refer to network communication section of the workshop manual. Using the manufacturers approved diagnostic system, complete a CAN integrity test
U0401-41	Invalid Data Received from ECM/PCM A - General checksum failure	■ General checksum failure ■ CAN signal error from Engine Control Module ■ CAN bus fault	■ Check for other CAN Bus codes. Refer to the electrical circuit diagrams and check the module connector and power/ground circuits. Refer to network communication section of the workshop manual. Using the manufacturers approved diagnostic system, complete a CAN integrity test
U0401-64	Invalid Data Received from ECM/PCM A - Signal plausibility failure	■ Signal plausibility failure	■ Check for other module related DTCs. Refer to the relevant section in the workshop manual. Check the control module for correct software version using the manufacturers approved diagnostic system

U0401-82	Invalid Data Received from ECM/PCM A - Alive / sequence counter incorrect / not updated	■ Alive / sequence counter incorrect / not updated ■ CAN signal error from Engine Control Module ■ CAN bus fault	■ Check for other CAN Bus codes. Refer to the electrical circuit diagrams and check the module connector and power/ground circuits. Refer to network communication section of the workshop manual. Using the manufacturers approved diagnostic system, complete a CAN integrity test
U0401-83	Invalid Data Received from ECM/PCM A - Value of signal protection calculation incorrect	■ Value of signal protection calculation incorrect ■ CAN signal error from Engine Control Module	■ Check Engine Control Module for other codes. Carry out repair actions. Refer to the electrical circuit diagrams and check the module connector and power/ground circuits
U0404-41	Invalid Data Received from Gear Shift Control Module A - General checksum failure	■ General checksum failure	■ Refer to the electrical circuit diagrams and check module connectors / CAN harness between Transmission Control Module (TCM) and Automatic Transmission Selector
U0404-64	Invalid Data Received from Gear Shift Control Module A - Signal plausibility failure	■ Signal plausibility failure	■ Refer to the electrical circuit diagrams and check module connectors / CAN harness between Transmission Control Module (TCM) and Automatic Transmission Selector. Check Automatic Transmission Selector unit for failure

U0404-82	Invalid Data Received from Gear Shift Control Module A - Alive / sequence counter incorrect / not updated	■ Alive / sequence counter incorrect / not updated	■ Refer to the electrical circuit diagrams and check module connectors / CAN harness between Transmission Control Module (TCM) and Automatic Transmission Selector
U0404-83	Invalid Data Received from Gear Shift Control Module A - Value of signal protection calculation incorrect	■ Value of signal protection calculation incorrect	■ Refer to the electrical circuit diagrams and check module connectors / CAN harness between Transmission Control Module (TCM) and Automatic Transmission Selector. Check Automatic Transmission Selector unit for failure
U0415-29	Invalid Data Received From Anti-Lock Brake System (ABS) Control Module - Signal invalid	■ Signal invalid ■ CAN signal error from Anti-Lock Brake System ■ CAN bus fault	■ Check for other CAN Bus codes. Refer to the electrical circuit diagrams and check the module connector and power/ground circuits. Refer to network communication section of the workshop manual. Using the manufacturers approved diagnostic system, complete a CAN integrity test
U0415-41	Invalid Data Received From Anti-Lock Brake System (ABS) Control Module - General checksum failure	■ General checksum failure ■ CAN signal error from Anti-Lock Brake System ■ CAN bus fault	■ Check for other CAN Bus codes. Refer to the electrical circuit diagrams and check the module connector and power/ground circuits. Refer to network communication section of the workshop manual. Using the manufacturers approved diagnostic system, complete a CAN integrity test

U0415-82	Invalid Data Received From Anti-Lock Brake System (ABS) Control Module - Alive / sequence counter incorrect / not updated	■ Alive / sequence counter incorrect / not updated ■ CAN signal error from Anti-Lock Brake System ■ CAN bus fault	■ Check for other CAN Bus codes. Refer to the electrical circuit diagrams and check the module connector and power/ground circuits. Refer to network communication section of the workshop manual. Using the manufacturers approved diagnostic system, complete a CAN integrity test
U0416-98	Invalid Data Received From Vehicle Dynamics Control Module - Component or system over temperature	■ Component or system over temperature	■ Check Anti-Lock Brake System for other codes. Carry out repair actions. Refer to the electrical circuit diagrams and check the module connector and power/ground circuits
U0422-41	Invalid Data Received From Body Control Module - General checksum failure	■ General checksum failure ■ CAN signal error from passenger compartment fuse box ■ CAN bus fault	■ Check for other CAN Bus codes. Refer to the electrical circuit diagrams and check the module connector and power/ground circuits. Refer to network communication section of the workshop manual. Using the manufacturers approved diagnostic system, complete a CAN integrity test
U0422-82	Invalid Data Received From Body Control Module - Alive / sequence counter	■ Alive / sequence counter incorrect / not updated	■ Check for other CAN Bus codes. Refer to the electrical circuit diagrams and check the module connector and power/ground circuits. Refer to network communication section of the workshop manual. Using the manufacturers approved diagnostic system, complete a CAN integrity test

	incorrect / not updated		
U0422-83	Invalid Data Received From Body Control Module - Value of signal protection calculation incorrect	■ Value of signal protection calculation incorrect ■ PowerMode CAN signal error from passenger compartment fuse box	■ Check for other CAN Bus codes. Refer to the electrical circuit diagrams and check the module connector and power/ground circuits. Refer to network communication section of the workshop manual. Using the manufacturers approved diagnostic system, complete a CAN integrity test
U0424-08	Invalid Data Received From HVAC Control Module - Bus Signal / Message Failures	■ Bus Signal / Message Failures	■ Check Integrated Climate Control Module and switch pack for other codes. Carry out repair actions. Refer to the electrical circuit diagrams and check the module connector and power/ground circuits
U101B-87	Lost Communication With GSM - Multiple Bus - Missing message	■ Missing message	■ Check for other CAN Bus and LIN related DTC codes. Refer to the electrical circuit diagrams and check the module connector and power/ground circuits. Refer to network communication section of the workshop manual. Using the manufacturers approved diagnostic system, complete a CAN/LIN integrity test
U2101-56	Control Module Configuration Incompatible - Invalid / incomplete configuration	■ Invalid / incomplete configuration	■ Check that the vehicle configuration is correctly set in the car configuration file using the manufacturer's approved diagnostic software. Check and update the Transmission Control Module (TCM) software version if necessary

U3000-56	Control Module - Invalid / incomplete configuration	■ Invalid / incomplete configuration	■ Clear the DTC and retest. If the problem persists, contact Dealer Technical Support (DTS)
U3001-94	Control Module Improper Shutdown - Unexpected operation	■ Unexpected operation ■ Charging circuit short to ground, power, open circuit ■ Quiescent current high ■ Battery failure /worn out ■ Generator failure	■ Refer to the electrical circuit diagrams and check charging circuit for short to ground, power, open circuit. Clear DTC and repeat automated diagnostic procedure using the manufacturer approved diagnostic system. If DTC remains check battery is in fully charged and serviceable condition using the Midtronics battery tester and battery care manual. If ok suspect the generator

GENERAL INFORMATION

DESCRIPTION AND OPERATION

TRANSMISSION CONTROL MODULE (TCM) - SIEMENS

CAUTION:

Diagnosis by substitution from a donor vehicle is **NOT** acceptable. Substitution of control modules does not guarantee confirmation of a fault, and may also cause additional faults in the vehicle being tested and/or the donor vehicle

NOTES:

- If the control module or a component is suspect and the vehicle remains under manufacturer warranty, refer to the warranty policy and procedures manual, or determine if any prior approval programme is in operation, prior to the installation of a new module/component
- Generic scan tools may not read the codes listed, or may read only 5-digit codes. Match the 5 digits from the scan tool to the first 5 digits of the 7-digit code listed to identify the fault (the last 2 digits give extra information read by the manufacturer-approved diagnostic system)
- When performing voltage or resistance tests, always use a digital multimeter accurate to three decimal places and with a current calibration certificate. When testing resistance, always take the resistance of the digital multimeter leads into account
- Check and rectify basic faults before beginning diagnostic routines involving pinpoint tests
- Inspect connectors for signs of water ingress, and pins for damage and/or corrosion
- If diagnostic trouble codes are recorded and, after performing the pinpoint tests, a fault is not present, an intermittent concern may be the cause. Always check for loose connections and corroded terminals
- Where an 'on demand self-test' is referred to, this can be accessed via the 'diagnostic trouble code monitor' tab on the manufacturers approved diagnostic system
- Check DDW for open campaigns. Refer to the corresponding bulletins and SSMs which may be valid for the specific customer complaint and carry out the recommendations as required

The table below lists all Diagnostic Trouble Codes (DTCs) that could be logged in the Transmission Control Module, for additional Diagnosis and Testing information refer to the relevant Diagnosis and Testing Section. For additional information, refer to: Diagnostics (307-01 Automatic Transmission/Transaxle - V8 5.0L Petrol /V8 S/C 5.0L Petrol, Diagnosis and Testing).

DTC	DESCRIPTION	POSSIBLE CAUSES	ACTION
P0121-86	Throttle/Pedal Position Sensor A Circuit Range /Performance - Signal invalid	■ Throttle position sensor sensing circuit signal invalid ■ Throttle position sensor failure	■ Check for engine management DTCs
P0219-86	Engine Overspeed Condition - Signal invalid	■ Engine speed implausible (signal invalid)	■ Check for engine management DTCs
P0500-81	Vehicle Speed Sensor A - Invalid serial data received	■ Vehicle speed signal invalid serial data received	■ Check for ABS DTCs
P0501-81	Vehicle Speed Sensor A Range /Performance - Invalid serial data received	■ Vehicle speed signal invalid serial data received	■ Check for ABS DTCs
P0561-1C	System Voltage	■ Power supply voltage is out of	■ Check the battery and charging system. Refer to the relevant workshop manual section. Clear DTC and retest

	Unstable - Circuit voltage out of range	range when the engine is running	
P0562-21	System Voltage Low - Signal amplitude < minimum	■ Supply voltage to TCM very low	■ Check the battery condition and state of charge. Check the Transmission Control Module connector and power supply circuits. Refer to the electrical circuit diagrams. Clear DTC and retest
P0563-22	System Voltage High - Signal amplitude > maximum	■ Power supply voltage is too high if the engine is running and there has been no jump-start or transmission limp-home event	■ Check the battery condition and state of charge. Check the Transmission Control Module connector and power supply circuits. Refer to the electrical circuit diagrams. Check if the vehicle has been jump-started. Clear the DTC and retest
P0601-41	Internal Control Module Memory Check Sum Error- General checksum failure	■ Checksum error	■ Check the Transmission Control Module connector and the power/ground circuits to the module. Clear the DTC and retest. If the problem persists, renew the Transmission Control Module Refer to the Warranty Policy and Procedures manual, or determine if any prior approval programme is in operation, prior to the installation of a new module/component
P0604-92	Internal Control Module Random Access Memory (RAM) Error - Performance or incorrect operation	■ Control module internal memory error	■ Check the Transmission Control Module connector and the power/ground circuits to the module. Clear the DTC and retest. If the problem persists, renew the Transmission Control Module Refer to the Warranty Policy and Procedures manual, or determine if any prior approval programme is in operation, prior to the installation of a new module/component

P0613-06	TCM Processor - Algorithm Based Failures	■ Internal processor watchdog error	■ Check the Transmission Control Module connector and the power/ground circuits to the module. Clear the DTC and retest. If the problem persists, renew the Transmission Control Module Refer to the Warranty Policy and Procedures manual, or determine if any prior approval programme is in operation, prior to the installation of a new module/component
P0613-47	TCM Processor - Watchdog /safety microcontroller failure	■ Internal processor watchdog error	■ Check the Transmission Control Module connector and the power/ground circuits to the module. Clear the DTC and retest. If the problem persists, renew the Transmission Control Module Refer to the Warranty Policy and Procedures manual, or determine if any prior approval programme is in operation, prior to the installation of a new module/component
P0613-68	TCM Processor - Event information	■ Event information	■ Check the Transmission Control Module connector and the power/ground circuits to the module. Clear the DTC and retest. If the problem persists, renew the Transmission Control Module Refer to the Warranty Policy and Procedures manual, or determine if any prior approval programme is in operation, prior to the installation of a new module/component
P061B-00	Internal Control Module Torque Calculation Performance - No sub type information	■ No sub type information	■ Check the Transmission Control Module connector and the power/ground circuits to the module. Clear the DTC and retest. If the problem persists, renew the Transmission Control Module Refer to the Warranty Policy and Procedures manual, or determine if any prior approval programme is in operation, prior to the installation of a new module/component
P061B-64	Internal Control Module Torque Calculation Performance# - Signal plausibility failure	■ Signal plausibility failure	■ Check the Transmission Control Module connector and the power/ground circuits to the module. Clear the DTC and retest. If the problem persists, renew the Transmission Control Module Refer to the Warranty Policy and Procedures manual, or determine if any prior approval programme is in operation, prior to the installation of a new module/component

P062F-04	Internal Control Module EEPROM Error - System internal failures	■ EEPROM error	■ Check the Transmission Control Module connector and the power/ground circuits to the module. Clear the DTC and retest. If the problem persists, renew the Transmission Control Module Refer to the Warranty Policy and Procedures manual, or determine if any prior approval programme is in operation, prior to the installation of a new module/component
P0642-21	Sensor Reference Voltage A Circuit Low - Signal amplitude < minimum	■ Reference voltage circuit signal amplitude below minimum	■ Check the Transmission Control Module connector and the power/ground circuits to the module. Clear the DTC and retest. If the problem persists, renew the Transmission Control Module Refer to the Warranty Policy and Procedures manual, or determine if any prior approval programme is in operation, prior to the installation of a new module/component
P0643-22	Sensor Reference Voltage A Circuit High - Signal amplitude > maximum	■ Reference voltage circuit signal amplitude above maximum	■ Check the Transmission Control Module connector and the power/ground circuits to the module. Clear the DTC and retest. If the problem persists, renew the Transmission Control Module Refer to the Warranty Policy and Procedures manual, or determine if any prior approval programme is in operation, prior to the installation of a new module/component
P0657-13	Actuator Supply Voltage A Circuit / Open - Circuit open	■ Supply voltage circuit open circuit	■ Check for other related DTCs. Check the park lock actuator, the actuator connector and wiring. Check the Transmission Control Module connector and the power/ground circuits to the module. Clear the DTC and test the shift lever in all positions. If the problem persists, renew the Transmission Control Module Refer to the warranty policies and procedures before renewing the transmission
P0658-11	Actuator Supply Voltage A Circuit Low - Circuit short to ground	■ Supply voltage circuit short circuit to ground	■ Check for other related DTCs. Check the park lock actuator, the actuator connector and wiring. Check the Transmission Control Module connector and the power/ground circuits to the module. Clear the DTC and test the

			shift lever in all positions. If the problem persists, renew the Transmission Control Module Refer to the warranty policies and procedures before renewing the transmission
P0659-12	Actuator Supply Voltage A Circuit High - Circuit short to battery	■ Supply voltage circuit short circuit to power	■ Check for other related DTCs. Check the park lock actuator, the actuator connector and wiring. Check the Transmission Control Module connector and the power/ground circuits to the module. Clear the DTC and test the shift lever in all positions. If the problem persists, renew the Transmission Control Module Refer to the warranty policies and procedures before renewing the transmission
P0667-01	PCM / ECM / TCM Internal Temperature Sensor Range /Performance - General electrical failure	■ Module internal temperature sensor general failure	■ Check the Transmission Control Module connector and the power/ground circuits to the module. Clear the DTC and retest. If the problem persists, renew the Transmission Control Module Consider environmental conditions before condemning the module. Refer to the Warranty Policy and Procedures manual, or determine if any prior approval programme is in operation, prior to the installation of a new module/component
P0667-04	PCM / ECM / TCM Internal Temperature Sensor Range /Performance - System internal failures	■ Module internal temperature sensor general failure	■ Check the Transmission Control Module connector and the power/ground circuits to the module. Clear the DTC and retest. If the problem persists, renew the Transmission Control Module Consider environmental conditions before condemning the module. Refer to the Warranty Policy and Procedures manual, or determine if any prior approval programme is in operation, prior to the installation of a new module/component
P0667-49	PCM / ECM / TCM Internal Temperature Sensor A Circuit Low - Internal electronic failure	■ Module internal temperature sensor general failure	■ Check the Transmission Control Module connector and the power/ground circuits to the module. Clear the DTC and retest. If the problem persists, renew the Transmission Control Module Consider environmental conditions before condemning the module. Refer to the Warranty Policy and Procedures manual, or determine if any prior approval programme is in operation, prior to the installation of a new module/component

P0700-02	Transmission Control System (MIL Request) - General signal failure	■ General signal failure	■ Check for other DTCs and rectify those first. Clear the DTCs and road test the vehicle. If further DTCs are logged, investigate according to the individual faults logged
P0700-22	Transmission Control System (MIL Request) - Signal amplitude > maximum	■ Signal amplitude above maximum	■ Check for other DTCs and rectify those first. Clear the DTCs and road test the vehicle. If further DTCs are logged, investigate according to the individual faults logged
P0700-75	Transmission Control System (MIL Request) - Emergency position not reachable	■ Emergency position not reachable	■ Check for other DTCs and rectify those first. Clear the DTCs and road test the vehicle. If further DTCs are logged, investigate according to the individual faults logged
P0710-15	Transmission Fluid Temperature Sensor A Circuit - Circuit short to battery or open	■ Circuit short to power or open circuit	■ Check the Transmission Control Module connector and the power/ground circuits to the module. Clear the DTC and retest. If the problem persists, renew the Transmission Control Module Refer to the Warranty Policy and Procedures manual, or determine if any prior approval programme is in operation, prior to the installation of a new module/component
P0711-22	Transmission Fluid Temperature Sensor A Circuit Range /Performance -	■ Signal amplitude above maximum	■ Allow the transmission to cool, clear the DTC and retest. If the problem persists, renew the Transmission Control Module Refer to the Warranty Policy and Procedures manual, or determine if any prior approval programme is in operation, prior to the installation of a new module /component

	Signal amplitude > maximum		
P0712-11	Transmission Fluid Temperature Sensor A Circuit Low - Circuit short to ground	■ Sensor circuit short circuit to ground	■ Check the Transmission Control Module connector and the power/ground circuits to the module. Clear the DTC and retest. If the problem persists, renew the Transmission Control Module Refer to the Warranty Policy and Procedures manual, or determine if any prior approval programme is in operation, prior to the installation of a new module/component
P0716-14	Turbine/Input Shaft Speed Sensor A Circuit Range /Performance - Circuit short to ground or open	■ Sensor circuit short circuit to ground or open circuit	■ Check the Transmission Control Module connector and the power/ground circuits to the module. Clear the DTC and retest. If the problem persists, renew the Transmission Control Module Refer to the Warranty Policy and Procedures manual, or determine if any prior approval programme is in operation, prior to the installation of a new module/component
P0716-21	Turbine/Input Shaft Speed Sensor A Circuit Range /Performance - Signal amplitude < minimum	■ Signal amplitude below minimum	■ Check the Transmission Control Module connector and the power/ground circuits to the module. Clear the DTC and retest. If the problem persists, renew the Transmission Control Module Refer to the Warranty Policy and Procedures manual, or determine if any prior approval programme is in operation, prior to the installation of a new module/component
P0716-22	Turbine/Input Shaft Speed Sensor A Circuit Range /Performance - Signal amplitude > maximum	■ Signal amplitude above maximum	■ Check the Transmission Control Module connector and the power/ground circuits to the module. Clear the DTC and retest. If the problem persists, renew the Transmission Control Module Refer to the Warranty Policy and Procedures manual, or determine if any prior approval programme is in operation, prior to the installation of a new module/component

P0717-12	Turbine/Input Shaft Speed Sensor A Circuit No Signal - Circuit short to battery	■ Sensor circuit short circuit to power	■ Check the Transmission Control Module connector and the power/ground circuits to the module. Clear the DTC and retest. If the problem persists, renew the Transmission Control Module Refer to the Warranty Policy and Procedures manual, or determine if any prior approval programme is in operation, prior to the installation of a new module/component
P0720-12	Output Shaft Speed Sensor Circuit - Circuit short to battery	■ Sensor circuit short circuit to power	■ Check the Transmission Control Module connector and the power/ground circuits to the module. Clear the DTC and retest. If the problem persists, renew the Transmission Control Module Refer to the Warranty Policy and Procedures manual, or determine if any prior approval programme is in operation, prior to the installation of a new module/component
P0720-14	Output Shaft Speed Sensor Circuit - Circuit short to ground or open	■ Sensor circuit short circuit to ground or open circuit	■ Check the Transmission Control Module connector and the power/ground circuits to the module. Clear the DTC and retest. If the problem persists, renew the Transmission Control Module Refer to the Warranty Policy and Procedures manual, or determine if any prior approval programme is in operation, prior to the installation of a new module/component
P0721-22	Output Shaft Speed Sensor Circuit Range /Performance - Signal amplitude > maximum	■ Signal amplitude above maximum	■ Check the Transmission Control Module connector and the power/ground circuits to the module. Clear the DTC and retest. If the problem persists, renew the Transmission Control Module Refer to the Warranty Policy and Procedures manual, or determine if any prior approval programme is in operation, prior to the installation of a new module/component
P0721-27	Output Shaft Speed Sensor Circuit Range /Performance - Signal rate of change above threshold	■ Signal rate of change above threshold	■ Check the Transmission Control Module connector and the power/ground circuits to the module. Clear the DTC and retest. If the problem persists, renew the Transmission Control Module Refer to the Warranty Policy and Procedures manual, or determine if any prior approval programme is in operation, prior to the installation of a new module/component

P0721-64	Output Shaft Speed Sensor Circuit Range /Performance - Signal plausibility failure	■ Signal plausibility failure	■ Check the Transmission Control Module connector and the power/ground circuits to the module. Clear the DTC and retest. If the problem persists, renew the Transmission Control Module Refer to the Warranty Policy and Procedures manual, or determine if any prior approval programme is in operation, prior to the installation of a new module/component
P0729-07	Gear 6 Incorrect Ratio - Mechanical Failures	■ Mechanical Failures	■ Check the oil level and quality. Adjust as necessary. Clear the DTC and retest. If fault persists, renew the transmission. Refer to the warranty policies and procedures before renewing the transmission
P0731-07	Gear 1 Incorrect Ratio - Mechanical Failures	■ Mechanical failures	■ Check the oil level and quality. Adjust as necessary. Clear the DTC and retest. If fault persists, renew the transmission. Refer to the warranty policies and procedures before renewing the transmission
P0732-07	Gear 2 Incorrect Ratio - Mechanical Failures	■ Mechanical failures	■ Check the oil level and quality. Adjust as necessary. Clear the DTC and retest. If fault persists, renew the transmission. Refer to the warranty policies and procedures before renewing the transmission
P0733-07	Gear 3 Incorrect Ratio - Mechanical Failures	■ Mechanical failures	■ Check the oil level and quality. Adjust as necessary. Clear the DTC and retest. If fault persists, renew the transmission. Refer to the warranty policies and procedures before renewing the transmission
P0734-07	Gear 4 Incorrect Ratio - Mechanical Failures	■ Mechanical failures	■ Check the oil level and quality. Adjust as necessary. Clear the DTC and retest. If fault persists, renew the transmission. Refer to the warranty policies and procedures before renewing the transmission
P0735-07	Gear 5 Incorrect Ratio - Mechanical Failures	■ Mechanical failures	■ Check the oil level and quality. Adjust as necessary. Clear the DTC and retest. If fault persists, renew the transmission. Refer to the warranty policies and procedures before renewing the transmission

P0736-07	Reverse Incorrect Ratio - Mechanical Failures	■ Mechanical failures	■ Check the oil level and quality. Adjust as necessary. Clear the DTC and retest. If fault persists, renew the transmission. Refer to the warranty policies and procedures before renewing the transmission
P0740-13	Torque Converter Clutch Solenoid Circuit / Open - Circuit open	■ Solenoid circuit open circuit	■ Check the Transmission Control Module connector and the power/ground circuits to the module. Clear the DTC and retest. If the problem persists, renew the Transmission Control Module Refer to the Warranty Policy and Procedures manual, or determine if any prior approval programme is in operation, prior to the installation of a new module/component
P0741-07	Torque Converter Clutch Solenoid Circuit Performance /Stuck Off - Mechanical Failures	■ Mechanical failures	■ Renew the torque convertor. If the transmission oil condition is very poor /dirty, renew the transmission. Refer to the warranty policies and procedures before renewing the transmission
P0781-07	1 - 2 Shift - Mechanical Failures	■ Mechanical failures	■ Check the fluid level and condition. Check the Transmission Control Module connector and the power/ground circuits to the module. Clear the DTC and road test the vehicle. If the problem persists, renew the transmission. Refer to the warranty policies and procedures before renewing the transmission
P0781-77	1 - 2 Shift - Commanded position not reachable	■ Commanded position not reachable	■ Check the fluid level and condition. Check the Transmission Control Module connector and the power/ground circuits to the module. Clear the DTC and road test the vehicle. If the problem persists, renew the transmission. Refer to the warranty policies and procedures before renewing the transmission
P0782-	2 - 3 Shift -		

07	Mechanical Failures	■ Mechanical failures	■ Check the fluid level and condition. Check the Transmission Control Module connector and the power/ground circuits to the module. Clear the DTC and road test the vehicle. If the problem persists, renew the transmission. Refer to the warranty policies and procedures before renewing the transmission
P0782-77	2 - 3 Shift - Commanded position not reachable	■ Commanded position not reachable	■ Check the fluid level and condition. Check the Transmission Control Module connector and the power/ground circuits to the module. Clear the DTC and road test the vehicle. If the problem persists, renew the transmission. Refer to the warranty policies and procedures before renewing the transmission
P0783-07	3 - 4 Shift - Mechanical Failures	■ Mechanical failures	■ Check the fluid level and condition. Check the Transmission Control Module connector and the power/ground circuits to the module. Clear the DTC and road test the vehicle. If the problem persists, renew the transmission. Refer to the warranty policies and procedures before renewing the transmission
P0783-77	3 - 4 Shift - Commanded position not reachable	■ Commanded position not reachable	■ Check the fluid level and condition. Check the Transmission Control Module connector and the power/ground circuits to the module. Clear the DTC and road test the vehicle. If the problem persists, renew the transmission. Refer to the warranty policies and procedures before renewing the transmission
P0784-07	4 - 5 Shift - Mechanical Failures	■ Mechanical failures	■ Check the fluid level and condition. Check the Transmission Control Module connector and the power/ground circuits to the module. Clear the DTC and road test the vehicle. If the problem persists, renew the transmission. Refer to the warranty policies and procedures before renewing the transmission
P0784-	4 - 5 Shift -		

77	Commanded position not reachable	■ Commanded position not reachable	■ Check the fluid level and condition. Check the Transmission Control Module connector and the power/ground circuits to the module. Clear the DTC and road test the vehicle. If the problem persists, renew the transmission. Refer to the warranty policies and procedures before renewing the transmission
P0798-1E	Pressure Control Solenoid C Electrical - Circuit resistance out of range	■ Circuit resistance out of range	■ Check the Transmission Control Module connector and the power/ground circuits to the module. Clear the DTC and retest. If the problem persists, renew the Transmission Control Module Refer to the Warranty Policy and Procedures manual, or determine if any prior approval programme is in operation, prior to the installation of a new module/component
P0798-21	Pressure Control Solenoid C Electrical - Signal amplitude < minimum	■ Signal amplitude below minimum	■ Check the Transmission Control Module connector and the power/ground circuits to the module. Clear the DTC and retest. If the problem persists, renew the Transmission Control Module Refer to the Warranty Policy and Procedures manual, or determine if any prior approval programme is in operation, prior to the installation of a new module/component
P0798-22	Pressure Control Solenoid C Electrical - Signal amplitude > maximum	■ Signal amplitude above maximum	■ Check the Transmission Control Module connector and the power/ground circuits to the module. Clear the DTC and retest. If the problem persists, renew the Transmission Control Module Refer to the Warranty Policy and Procedures manual, or determine if any prior approval programme is in operation, prior to the installation of a new module/component
P0815-33	Upshift Switch Circuit - Signal low time > maximum	■ Circuit signal low time greater than maximum	■ Refer to the electrical circuit diagrams and check the circuit between the command upshift switch and the Transmission Control Module. Check the switch operation of the Transmission Shift Selector

P0816-33	Downshift Switch Circuit - Signal low time > maximum	■ Circuit signal low time greater than maximum	■ Refer to the electrical circuit diagrams and check the circuit between the command downshift switch and the Transmission Control Module. Check the switch operation of the Transmission Shift Selector
P081C-64	Park Input Circuit - Signal plausibility failure	■ Park lock circuit short circuit to ground, short circuit to power, open circuit or high resistance ■ Park lock solenoid internal failure	■ Refer to the electrical circuit diagrams and check the park lock circuit between the Transmission Control Module, and the park lock solenoid for short circuit to ground, short circuit to power, open circuit or high resistance ■ Inspect connectors for signs of water ingress, and pins for damage and/or corrosion ■ Clear the DTC and retest ■ Check and install a new park lock solenoid as required
P0826-62	Up and Down Switch Circuit - Signal compare failure	■ Circuit signal compare failure	■ Refer to the electrical circuit diagrams and check the circuit between the command shift switch and the Transmission Control Module. Check the switch operation of the Transmission Shift Selector
P0829-07	5-6 Shift - Mechanical Failures	■ Mechanical failures	■ Check the fluid level and condition. Check the Transmission Control Module connector and the power/ground circuits to the module. Clear the DTC and road test the vehicle. If the problem persists, renew the transmission. Refer to the warranty policies and procedures before renewing the transmission
P0829-77	5-6 Shift - Commanded position not reachable	■ Mechanical failures	■ Check the fluid level and condition. Check the Transmission Control Module connector and the power/ground circuits to the module. Clear the DTC and road test the vehicle. If the problem persists, renew the transmission. Refer to the warranty policies and procedures before renewing the transmission
P0850-	Park / Neutral		

29	Switch Input Circuit - Signal invalid	■ Starter inhibit signal invalid	■ Refer to the electrical circuit diagrams and check the park/neutral switch circuit between the central electronics module, the Engine Control Module and Transmission Control Module Clear the DTC and check that the engine starts in park and neutral and not in any other selected position. If the fault persists, renew the renew the Transmission Control Module
P0915-01	Gear Shift Position Circuit Range /Performance - General electrical failure	■ General electrical failure	■ Check the Transmission Control Module connector and the power/ground circuits to the module. Clear the DTC and retest. If the problem persists, renew the Transmission Control Module Refer to the Warranty Policy and Procedures manual, or determine if any prior approval programme is in operation, prior to the installation of a new module/component
P0915-64	Gear Shift Position Circuit Range /Performance - Signal plausibility failure	■ Signal plausibility failure	■ Check the Transmission Control Module connector and the power/ground circuits to the module. Clear the DTC and retest. If the problem persists, renew the Transmission Control Module Refer to the Warranty Policy and Procedures manual, or determine if any prior approval programme is in operation, prior to the installation of a new module/component
P092C-00	Gear Shift Lock Solenoid Actuator Circuit B Low - No sub type information	**NOTE:** This DTC only applies to vehicles fitted with a park lock solenoid ■ No sub type information	■ Check for other related DTCs. Check the shift lock actuator, the connectors and wiring. Check the Transmission Control Module connector and the power/ground circuits to the module. Clear the DTC and test the shift lever in all positions. If the problem persists, renew the Transmission Control Module Refer to the warranty policies and procedures before renewing the transmission

P092D-00	Gear Shift Lock Solenoid Actuator Circuit B High - No sub type information	**NOTE:** This DTC only applies to vehicles fitted with a park lock solenoid ■ No sub type information	■ Check for other related DTCs. Check the shift lock actuator, the connectors and wiring. Check the Transmission Control Module connector and the power/ground circuits to the module. Clear the DTC and test the shift lever in all positions. If the problem persists, renew the Transmission Control Module Refer to the warranty policies and procedures before renewing the transmission
P0930-00	Gear Shift Lock Solenoid /Actuator Circuit A Low - No sub type information	■ No sub type information	■ Check for other related DTCs. Check the shift lock actuator, the connectors and wiring. Check the Transmission Control Module connector and the power/ground circuits to the module. Clear the DTC and test the shift lever in all positions. If the problem persists, renew the Transmission Control Module Refer to the warranty policies and procedures before renewing the transmission
P0931-00	Gear Shift Lock Solenoid /Actuator Circuit A High - No sub type information	■ No sub type information	■ Check for other related DTCs. Check the shift lock actuator, the connectors and wiring. Check the Transmission Control Module connector and the power/ground circuits to the module. Clear the DTC and test the shift lever in all positions. If the problem persists, renew the Transmission Control Module Refer to the warranty policies and procedures before renewing the transmission
P0938-29	Hydraulic Oil Temperature Sensor Range /Performance - Signal invalid	■ Temperature sensor signal invalid	■ Allow the transmission to cool, clear the DTC and road test the vehicle. If the problem persists, renew the Transmission Control Module Refer to the Warranty Policy and Procedures manual, or determine if any prior approval programme is in operation, prior to the installation of a new module /component

P0963-12	Pressure Control Solenoid A Control Circuit High - Circuit short to battery	■ Control circuit short circuit to power	■ Check the Transmission Control Module connector and the power/ground circuits to the module. Clear the DTC and retest. If the problem persists, renew the Transmission Control Module Refer to the Warranty Policy and Procedures manual, or determine if any prior approval programme is in operation, prior to the installation of a new module/component
P0963-13	Pressure Control Solenoid A Control Circuit High - Circuit open	■ Control circuit open circuit	■ Check the Transmission Control Module connector and the power/ground circuits to the module. Clear the DTC and retest. If the problem persists, renew the Transmission Control Module Refer to the Warranty Policy and Procedures manual, or determine if any prior approval programme is in operation, prior to the installation of a new module/component
P0964-13	Pressure Control Solenoid B Control Circuit / Open - Circuit open	■ Control circuit high resistance	■ Check the Transmission Control Module connector and the power/ground circuits to the module. Clear the DTC and retest. If the problem persists, renew the Transmission Control Module Refer to the Warranty Policy and Procedures manual, or determine if any prior approval programme is in operation, prior to the installation of a new module/component
P0966-11	Pressure Control Solenoid B Control Circuit Low - Circuit short to ground	■ Control circuit short circuit to ground	■ Check the Transmission Control Module connector and the power/ground circuits to the module. Clear the DTC and retest. If the problem persists, renew the Transmission Control Module Refer to the Warranty Policy and Procedures manual, or determine if any prior approval programme is in operation, prior to the installation of a new module/component
P0966-14	Pressure Control Solenoid B Control Circuit Low - Circuit short to ground or open	■ Control circuit short circuit to ground or open circuit	■ Check the Transmission Control Module connector and the power/ground circuits to the module. Clear the DTC and retest. If the problem persists, renew the Transmission Control Module Refer to the Warranty Policy and Procedures manual, or determine if any prior approval programme is in operation, prior to the installation of a new module/component

P0966-1E	Pressure Control Solenoid B Control Circuit Low - Circuit resistance out of range	■ Circuit resistance out of range	■ Check the Transmission Control Module connector and the power/ground circuits to the module. Clear the DTC and retest. If the problem persists, renew the Transmission Control Module Refer to the Warranty Policy and Procedures manual, or determine if any prior approval programme is in operation, prior to the installation of a new module/component
P0966-21	Pressure Control Solenoid B Control Circuit Low - Signal amplitude < minimum	■ Circuit signal amplitude below minimum	■ Check the Transmission Control Module connector and the power/ground circuits to the module. Clear the DTC and retest. If the problem persists, renew the Transmission Control Module Refer to the Warranty Policy and Procedures manual, or determine if any prior approval programme is in operation, prior to the installation of a new module/component
P0967-12	Pressure Control Solenoid B Control Circuit High - Circuit short to battery	■ Control circuit short circuit to power	■ Check the Transmission Control Module connector and the power/ground circuits to the module. Clear the DTC and retest. If the problem persists, renew the Transmission Control Module Refer to the Warranty Policy and Procedures manual, or determine if any prior approval programme is in operation, prior to the installation of a new module/component
P0967-22	Pressure Control Solenoid B Control Circuit High - Signal amplitude > maximum	■ Circuit signal amplitude above maximum	■ Check the Transmission Control Module connector and the power/ground circuits to the module. Clear the DTC and retest. If the problem persists, renew the Transmission Control Module Refer to the Warranty Policy and Procedures manual, or determine if any prior approval programme is in operation, prior to the installation of a new module/component
P0968-13	Pressure Control Solenoid C	■ Control circuit open circuit	■ Check the Transmission Control Module connector and the power/ground circuits to the module. Clear the DTC and retest. If the problem persists, renew the Transmission Control Module Refer to the Warranty Policy and Procedures manual, or determine if any prior approval programme is in operation, prior to the installation of a new module/component

	Control Circuit / Open - Circuit open		
P0970-11	Pressure Control Solenoid C Control Circuit Low - Circuit short to ground	■ Control circuit short circuit to ground	■ Check the Transmission Control Module connector and the power/ground circuits to the module. Clear the DTC and retest. If the problem persists, renew the Transmission Control Module Refer to the Warranty Policy and Procedures manual, or determine if any prior approval programme is in operation, prior to the installation of a new module/component
P0970-14	Pressure Control Solenoid C Control Circuit Low - Circuit short to ground or open	■ Control circuit short circuit to power	■ Check the Transmission Control Module connector and the power/ground circuits to the module. Clear the DTC and retest. If the problem persists, renew the Transmission Control Module Refer to the Warranty Policy and Procedures manual, or determine if any prior approval programme is in operation, prior to the installation of a new module/component
P0971-12	Pressure Control Solenoid C Control Circuit High - Circuit short to battery	■ Control circuit short circuit to power	■ Check the Transmission Control Module connector and the power/ground circuits to the module. Clear the DTC and retest. If the problem persists, renew the Transmission Control Module Refer to the Warranty Policy and Procedures manual, or determine if any prior approval programme is in operation, prior to the installation of a new module/component
P0972-21	Shift Solenoid A Control Circuit Range /Performance - Signal amplitude < minimum	■ Circuit signal amplitude below minimum	■ Check the Transmission Control Module connector and the power/ground circuits to the module. Clear the DTC and retest. If the problem persists, renew the Transmission Control Module Refer to the Warranty Policy and Procedures manual, or determine if any prior approval programme is in operation, prior to the installation of a new module/component
P0972-22	Shift Solenoid A Control Circuit Range	■ Circuit signal amplitude above maximum	■ Check the Transmission Control Module connector and the power/ground circuits to the module. Clear the DTC and retest. If the problem persists, renew the Transmission Control Module Refer to the Warranty Policy and

	/Performance - Signal amplitude > maximum		Procedures manual, or determine if any prior approval programme is in operation, prior to the installation of a new module/component
P0973-11	Shift Solenoid A Control Circuit Low - Circuit short to ground	■ Shift solenoid circuit short to ground	■ Check the Transmission Control Module connector and the power/ground circuits to the module. Clear the DTC and retest. If the problem persists, renew the Transmission Control Module Refer to the Warranty Policy and Procedures manual, or determine if any prior approval programme is in operation, prior to the installation of a new module/component
P0973-14	Shift Solenoid A Control Circuit Low - Circuit short to ground or open	■ Shift solenoid circuit short to ground or open circuit	■ Check the Transmission Control Module connector and the power/ground circuits to the module. Clear the DTC and retest. If the problem persists, renew the Transmission Control Module Refer to the Warranty Policy and Procedures manual, or determine if any prior approval programme is in operation, prior to the installation of a new module/component
P0973-1E	Shift Solenoid A Control Circuit Low - Circuit resistance out of range	■ Shift solenoid circuit resistance out of range	■ Check the Transmission Control Module connector and the power/ground circuits to the module. Clear the DTC and retest. If the problem persists, renew the Transmission Control Module Refer to the Warranty Policy and Procedures manual, or determine if any prior approval programme is in operation, prior to the installation of a new module/component
P1706-9A	High Vehicle Speed Observed in Park - Component or system operating conditions	■ Component or system operating conditions	■ Possibly indicates a misuse/incorrect selection while vehicle in motion. Check the transmission park lock operation
P2700-07	Transmission Friction	■ Mechanical failures	■ Renew the transmission. Refer to the warranty policies and procedures before renewing the transmission

	Element A Apply Time Range /Performance - Mechanical Failures		
P2701-07	Transmission Friction Element B Apply Time Range /Performance - Mechanical Failures	■ Mechanical failures	■ Renew the transmission. Refer to the warranty policies and procedures before renewing the transmission
P2702-07	Transmission Friction Element C Apply Time Range /Performance - Mechanical Failures	■ Mechanical failures	■ Renew the transmission. Refer to the warranty policies and procedures before renewing the transmission
P2703-07	Transmission Friction Element D Apply Time Range /Performance - Mechanical Failures	■ Mechanical failures	■ Renew the transmission. Refer to the warranty policies and procedures before renewing the transmission
P2704-07	Transmission Friction Element E	■ Mechanical failures	■ Renew the transmission. Refer to the warranty policies and procedures before renewing the transmission

	Apply Time Range /Performance - Mechanical Failures		
P2716-1E	Pressure Control Solenoid D Electrical - Circuit resistance out of range	■ Circuit resistance out of range	■ Check the Transmission Control Module connector and the power/ground circuits to the module. Clear the DTC and retest. If the problem persists, renew the Transmission Control Module Refer to the Warranty Policy and Procedures manual, or determine if any prior approval programme is in operation, prior to the installation of a new module/component
P2716-21	Pressure Control Solenoid D Electrical - Signal amplitude < minimum	■ Circuit signal amplitude below minimum	■ Check the Transmission Control Module connector and the power/ground circuits to the module. Clear the DTC and retest. If the problem persists, renew the Transmission Control Module Refer to the Warranty Policy and Procedures manual, or determine if any prior approval programme is in operation, prior to the installation of a new module/component
P2716-22	Pressure Control Solenoid D Electrical - Signal amplitude > maximum	■ Circuit signal amplitude above maximum	■ Check the Transmission Control Module connector and the power/ground circuits to the module. Clear the DTC and retest. If the problem persists, renew the Transmission Control Module Refer to the Warranty Policy and Procedures manual, or determine if any prior approval programme is in operation, prior to the installation of a new module/component
P2718-13	Pressure Control Solenoid D Control Circuit / Open - Circuit open	■ Control circuit open circuit	■ Check the Transmission Control Module connector and the power/ground circuits to the module. Clear the DTC and retest. If the problem persists, renew the Transmission Control Module Refer to the Warranty Policy and Procedures manual, or determine if any prior approval programme is in operation, prior to the installation of a new module/component

P2720-11	Pressure Control Solenoid D Control Circuit Low - Circuit short to ground	■ Control circuit short circuit to ground	■ Check the Transmission Control Module connector and the power/ground circuits to the module. Clear the DTC and retest. If the problem persists, renew the Transmission Control Module Refer to the Warranty Policy and Procedures manual, or determine if any prior approval programme is in operation, prior to the installation of a new module/component
P2720-14	Pressure Control Solenoid D Control Circuit Low - Circuit short to ground or open	■ Control circuit short circuit to ground or open circuit	■ Check the Transmission Control Module connector and the power/ground circuits to the module. Clear the DTC and retest. If the problem persists, renew the Transmission Control Module Refer to the Warranty Policy and Procedures manual, or determine if any prior approval programme is in operation, prior to the installation of a new module/component
P2721-12	Pressure Control Solenoid D Control Circuit High - Circuit short to battery	■ Control circuit short circuit to power	■ Check the Transmission Control Module connector and the power/ground circuits to the module. Clear the DTC and retest. If the problem persists, renew the Transmission Control Module Refer to the Warranty Policy and Procedures manual, or determine if any prior approval programme is in operation, prior to the installation of a new module/component
P2725-1E	Pressure Control Solenoid E Electrical - Circuit resistance out of range	■ Circuit signal amplitude below minimum	■ Check the Transmission Control Module connector and the power/ground circuits to the module. Clear the DTC and retest. If the problem persists, renew the Transmission Control Module Refer to the Warranty Policy and Procedures manual, or determine if any prior approval programme is in operation, prior to the installation of a new module/component
P2725-21	Pressure Control Solenoid E Electrical - Signal amplitude < minimum	■ Circuit signal amplitude below minimum	■ Check the Transmission Control Module connector and the power/ground circuits to the module. Clear the DTC and retest. If the problem persists, renew the Transmission Control Module Refer to the Warranty Policy and Procedures manual, or determine if any prior approval programme is in operation, prior to the installation of a new module/component

P2725-22	Pressure Control Solenoid E Electrical - Signal amplitude > maximum	■ Circuit signal amplitude above maximum	■ Check the Transmission Control Module connector and the power/ground circuits to the module. Clear the DTC and retest. If the problem persists, renew the Transmission Control Module Refer to the Warranty Policy and Procedures manual, or determine if any prior approval programme is in operation, prior to the installation of a new module/component
P2727-13	Pressure Control Solenoid E Control Circuit / Open - Circuit open	■ Control circuit open circuit	■ Check the Transmission Control Module connector and the power/ground circuits to the module. Clear the DTC and retest. If the problem persists, renew the Transmission Control Module Refer to the Warranty Policy and Procedures manual, or determine if any prior approval programme is in operation, prior to the installation of a new module/component
P2729-11	Pressure Control Solenoid E Control Circuit Low - Circuit short to ground	■ Control circuit short circuit to ground	■ Check the Transmission Control Module connector and the power/ground circuits to the module. Clear the DTC and retest. If the problem persists, renew the Transmission Control Module Refer to the Warranty Policy and Procedures manual, or determine if any prior approval programme is in operation, prior to the installation of a new module/component
P2729-14	Pressure Control Solenoid E Control Circuit Low - Circuit short to ground or open	■ Control circuit short circuit to ground or open circuit	■ Check the Transmission Control Module connector and the power/ground circuits to the module. Clear the DTC and retest. If the problem persists, renew the Transmission Control Module Refer to the Warranty Policy and Procedures manual, or determine if any prior approval programme is in operation, prior to the installation of a new module/component
P2730-12	Pressure Control Solenoid E Control Circuit High - Circuit short to battery	■ Control circuit short circuit to power	■ Check the Transmission Control Module connector and the power/ground circuits to the module. Clear the DTC and retest. If the problem persists, renew the Transmission Control Module Refer to the Warranty Policy and Procedures manual, or determine if any prior approval programme is in operation, prior to the installation of a new module/component

P2734-1E	Pressure Control Solenoid F Electrical - Circuit resistance out of range	■ Circuit resistance out of range	■ Check the Transmission Control Module connector and the power/ground circuits to the module. Clear the DTC and retest. If the problem persists, renew the Transmission Control Module Refer to the Warranty Policy and Procedures manual, or determine if any prior approval programme is in operation, prior to the installation of a new module/component
P2734-21	Pressure Control Solenoid F Electrical - Signal amplitude < minimum	■ Circuit signal amplitude below minimum	■ Check the Transmission Control Module connector and the power/ground circuits to the module. Clear the DTC and retest. If the problem persists, renew the Transmission Control Module Refer to the Warranty Policy and Procedures manual, or determine if any prior approval programme is in operation, prior to the installation of a new module/component
P2734-22	Pressure Control Solenoid F Electrical - Signal amplitude > maximum	■ Circuit signal amplitude above maximum	■ Check the Transmission Control Module connector and the power/ground circuits to the module. Clear the DTC and retest. If the problem persists, renew the Transmission Control Module Refer to the Warranty Policy and Procedures manual, or determine if any prior approval programme is in operation, prior to the installation of a new module/component
P2736-13	Pressure Control Solenoid F Control Circuit / Open - Circuit open	■ Control circuit open circuit	■ Check the Transmission Control Module connector and the power/ground circuits to the module. Clear the DTC and retest. If the problem persists, renew the Transmission Control Module Refer to the Warranty Policy and Procedures manual, or determine if any prior approval programme is in operation, prior to the installation of a new module/component
P2738-11	Pressure Control Solenoid F Control Circuit Low - Circuit short to ground	■ Control circuit short circuit to ground	■ Check the Transmission Control Module connector and the power/ground circuits to the module. Clear the DTC and retest. If the problem persists, renew the Transmission Control Module Refer to the Warranty Policy and Procedures manual, or determine if any prior approval programme is in operation, prior to the installation of a new module/component

P2738-14	Pressure Control Solenoid F Control Circuit Low - Circuit short to ground or open	■ Control circuit short circuit to ground or open circuit	■ Check the Transmission Control Module connector and the power/ground circuits to the module. Clear the DTC and retest. If the problem persists, renew the Transmission Control Module Refer to the Warranty Policy and Procedures manual, or determine if any prior approval programme is in operation, prior to the installation of a new module/component
P2739-12	Pressure Control Solenoid F Control Circuit High - Circuit short to battery	■ Control circuit short circuit to power	■ Check the Transmission Control Module connector and the power/ground circuits to the module. Clear the DTC and retest. If the problem persists, renew the Transmission Control Module Refer to the Warranty Policy and Procedures manual, or determine if any prior approval programme is in operation, prior to the installation of a new module/component
P2763-12	Torque Converter Clutch Pressure Control Solenoid Control Circuit High - Circuit short to battery	■ Pressure control solenoid circuit short circuit to power	■ Check the Transmission Control Module connector and the power/ground circuits to the module. Clear the DTC and retest. If the problem persists, renew the Transmission Control Module Refer to the Warranty Policy and Procedures manual, or determine if any prior approval programme is in operation, prior to the installation of a new module/component
P2763-22	Torque Converter Clutch Pressure Control Solenoid Control Circuit High - Signal amplitude > maximum	■ Circuit signal amplitude above maximum	■ Check the Transmission Control Module connector and the power/ground circuits to the module. Clear the DTC and retest. If the problem persists, renew the Transmission Control Module Refer to the Warranty Policy and Procedures manual, or determine if any prior approval programme is in operation, prior to the installation of a new module/component

P2764-11	Torque Converter Clutch Pressure Control Solenoid Control Circuit Low - Circuit short to ground	■ Control circuit short circuit to ground	■ Check the Transmission Control Module connector and the power/ground circuits to the module. Clear the DTC and retest. If the problem persists, renew the Transmission Control Module Refer to the Warranty Policy and Procedures manual, or determine if any prior approval programme is in operation, prior to the installation of a new module/component
P2764-14	Torque Converter Clutch Pressure Control Solenoid Control Circuit Low - Circuit short to ground or open	■ Control circuit short circuit to ground or open circuit	■ Check the Transmission Control Module connector and the power/ground circuits to the module. Clear the DTC and retest. If the problem persists, renew the Transmission Control Module Refer to the Warranty Policy and Procedures manual, or determine if any prior approval programme is in operation, prior to the installation of a new module/component
P2764-1E	Torque Converter Clutch Pressure Control Solenoid Control Circuit Low - Circuit resistance out of range	■ Control circuit resistance out of range	■ Check the Transmission Control Module connector and the power/ground circuits to the module. Clear the DTC and retest. If the problem persists, renew the Transmission Control Module Refer to the Warranty Policy and Procedures manual, or determine if any prior approval programme is in operation, prior to the installation of a new module/component
P2764-21	Torque Converter Clutch Pressure Control	■ Circuit signal amplitude below minimum	■ Check the Transmission Control Module connector and the power/ground circuits to the module. Clear the DTC and retest. If the problem persists, renew the Transmission Control Module Refer to the Warranty Policy and Procedures manual, or determine if any prior approval programme is in operation, prior to the installation of a new module/component

	Solenoid Control Circuit Low - Signal amplitude < minimum		
U0001-88	High Speed CAN Communication CAN Bus - Bus off	■ CAN Bus off	■ Check for other CAN Bus off codes. Refer to the electrical circuit diagrams and check the module connector and power/ground circuits. Refer to network communication section of the workshop manual. Using the manufacturers approved diagnostic system, complete a CAN integrity test. Check integrity of fuses and for loose plugs. Refer to the electrical circuit diagrams and connect an Ohm meter between the pins for CAN high and CAN low. If the resistance is 0 Ohm with a short circuit at CAN bus, renew the Transmission Control Module If the resistance is infinite with open circuit at CAN bus, renew the Transmission Control Module A correct resistance should be approximately 40kOhm
U0100-00	Lost Communication With ECM/PCM "A" - No sub type information	■ No sub type information	■ Check for other CAN Bus off codes. Examine for loose plugs. Refer to the electrical circuit diagrams and check the module connector and power /ground circuits. Refer to network communication section of the workshop manual. Using the manufacturers approved diagnostic system, complete a CAN integrity test
U0102-00	Lost Communication with Transfer Case Control Module - No sub type information	■ No sub type information	■ Check for other CAN Bus off codes. Examine for loose plugs. Refer to the electrical circuit diagrams and check the module connector and power /ground circuits. Refer to network communication section of the workshop manual. Using the manufacturers approved diagnostic system, complete a CAN integrity test
U0121-00	Lost Communication With Anti-Lock Brake System	■ No sub type information	■ Check for other CAN Bus off codes. Examine for loose plugs. Refer to the electrical circuit diagrams and check the module connector and power

	(ABS) Control Module - No sub type information		/ground circuits. Refer to network communication section of the workshop manual. Using the manufacturers approved diagnostic system, complete a CAN integrity test
U0126-00	Lost Communication With Steering Angle Sensor Module - No sub type information	■ No sub type information	■ Check for other CAN Bus off codes. Examine for loose plugs. Refer to the electrical circuit diagrams and check the module connector and power /ground circuits. Refer to network communication section of the workshop manual. Using the manufacturers approved diagnostic system, complete a CAN integrity test
U0128-00	Lost Communication With Park Brake Control Module - No sub type information	■ No sub type information	■ Check for other CAN Bus off codes. Examine for loose plugs. Refer to the electrical circuit diagrams and check the module connector and power /ground circuits. Refer to network communication section of the workshop manual. Using the manufacturers approved diagnostic system, complete a CAN integrity test
U0138-00	Lost Communication with All Terrain Control Module - No sub type information	■ No sub type information	■ Check for other CAN Bus off codes. Examine for loose plugs. Refer to the electrical circuit diagrams and check the module connector and power /ground circuits. Refer to network communication section of the workshop manual. Using the manufacturers approved diagnostic system, complete a CAN integrity test
U0140-00	Lost Communication With Body Control Module - No sub type information	■ No sub type information	■ Check for other CAN Bus off codes. Examine for loose plugs. Refer to the electrical circuit diagrams and check the module connector and power /ground circuits. Refer to network communication section of the workshop manual. Using the manufacturers approved diagnostic system, complete a CAN integrity test
U0140-68	Lost Communication	△ NOTE:	■ Check the operation of the command shift switch. Check the electrical connections to the switch. Refer to the electrical circuit diagrams and check

	With Body Control Module - Event information	This DTC only applies to vehicles fitted with gear shift-paddles ■ Event information - no gear shift functionality via paddles	the circuit between the command shift switch and the Transmission Control Module. Check the power/ground circuits and the Central Junction Box connector. Confirm that the car configuration is correct to vehicle specification. Refer to the lost communication statement in the network communication section of the workshop manual
U0300-00	Internal Control Module Software Incompatibility - No sub type information	■ No sub type information	■ Check for other modules reporting CAN Bus off or lost communication faults. If other modules report problems, check the software version in the Central Junction Box (GEM) using the manufacturers approved diagnostic system. If no other modules report problems, check the software version in the Transmission Control Module Update as necessary
U0401-00	Invalid Data Received from ECM/PCM A - No sub type information	■ No sub type information	■ Check for other module related DTCs. Refer to the relevant section in the workshop manual. Check the control module for correct software version using the manufacturers approved diagnostic system
U0401-64	Invalid Data Received from ECM/PCM A - Signal plausibility failure	■ Signal plausibility failure	■ Check for other module related DTCs. Refer to the relevant section in the workshop manual. Check the control module for correct software version using the manufacturers approved diagnostic system
U0401-	Invalid Data	■ Event information	

68	Received from ECM/PCM A - Event information		■ Check for other module related DTCs. Refer to the relevant section in the workshop manual. Check the control module for correct software version using the manufacturers approved diagnostic system
U0415-64	Invalid Data Received From Anti-Lock Brake System (ABS) Control Module - Signal plausibility failure	■ Signal plausibility failure	■ Check for other module related DTCs. Refer to the relevant section in the workshop manual. Check the control module for correct software version using the manufacturers approved diagnostic system
U0415-68	Invalid Data Received From Anti-Lock Brake System (ABS) Control Module - Event information	■ Event information	■ Check for other module related DTCs. Refer to the relevant section in the workshop manual. Check the control module for correct software version using the manufacturers approved diagnostic system
U0422-08	Invalid Data Received From Body Control Module - Bus Signal /Message Failures	**NOTE:** This DTC only applies to vehicles fitted with gear shift-paddles ■ Bus signal /message failures	■ Check the operation of the command shift switch. Check the electrical connections to the switch. Refer to the electrical circuit diagrams and check the circuit between the command shift switch and the Transmission Control Module. Check the power/ground circuits and the Central Junction Box connector. Confirm that the car configuration is correct to vehicle specification. Refer to the lost communication statement in the network communication section of the workshop manual

U0422-66	Invalid Data Received From Central Electronics Module - Signal has too many transitions /events	**NOTE:** This DTC only applies to vehicles fitted with gear shift-paddles ■ Signal has too many transitions /events	■ Check the operation of the command shift switch. Check the electrical connections to the switch. Refer to the electrical circuit diagrams and check the circuit between the command shift switch and the Transmission Control Module. Check the power/ground circuits and the Central Junction Box connector. Confirm that the car configuration is correct to vehicle specification. Refer to the lost communication statement in the network communication section of the workshop manual
U0422-68	Invalid Data Received From Central Electronics Module - Event information	■ Event information	■ Check the operation of the command shift switch. Check the electrical connections to the switch. Refer to the electrical circuit diagrams and check the circuit between the command shift switch and the Transmission Control Module. Check the power/ground circuits and the Central Junction Box connector. Refer to the lost communication statement in the network communication section of the workshop manual
U2101-00	Control Module Configuration Incompatible - No sub type information	■ No sub type information	■ Check that the vehicle configuration is correctly set in the car configuration file using the manufacturer's approved diagnostic software. Check and update the Transmission Control Module software version if necessary
U3000-4B	Control Module - Over temperature	■ Module over temperature	■ Check the Transmission Control Module connector and the power/ground circuits to the module. Refer to the electrical circuit diagrams and check the transmission cooling circuit. Clear the DTC and retest. If the problem persists, renew the Transmission Control Module. Consider environmental conditions before condemning the module. Refer to the Warranty Policy

			and Procedures manual, or determine if any prior approval programme is in operation, prior to the installation of a new module/component
U3001-94	Control Module Improper Shutdown - Unexpected operation	■ Unexpected operation ■ Charging circuit short to ground, power, open circuit ■ Quiescent current high ■ Battery failure /worn out ■ Generator failure	■ Refer to the electrical circuit diagrams and check charging circuit for short to ground, power, open circuit. Clear DTC and repeat automated diagnostic procedure using the manufacturer approved diagnostic system. If DTC remains check battery is in fully charged and serviceable condition using the Midtronics battery tester and battery care manual. If ok suspect the generator

2012.0 RANGE ROVER (LM), 100-00

GENERAL INFORMATION

DESCRIPTION AND OPERATION

TRANSMISSION SHIFT MODULE (GSM)

CAUTION:

Diagnosis by substitution from a donor vehicle is **NOT** acceptable. Substitution of control modules does not guarantee confirmation of a fault, and may also cause additional faults in the vehicle being tested and/or the donor vehicle

NOTES:

- If the control module or a component is suspect and the vehicle remains under manufacturer warranty, refer to the warranty policy and procedures manual, or determine if any prior approval programme is in operation, prior to the installation of a new module/component
- Generic scan tools may not read the codes listed, or may read only 5-digit codes. Match the 5 digits from the scan tool to the first 5 digits of the 7-digit code listed to identify the fault (the last 2 digits give extra information read by the manufacturer-approved diagnostic system)
- When performing voltage or resistance tests, always use a digital multimeter accurate to three decimal places and with a current calibration certificate. When testing resistance, always take the resistance of the digital multimeter leads into account
- Check and rectify basic faults before beginning diagnostic routines involving pinpoint tests
- Inspect connectors for signs of water ingress, and pins for damage and/or corrosion
- If diagnostic trouble codes are recorded and, after performing the pinpoint tests, a fault is not present, an intermittent concern may be the cause. Always check for loose connections and corroded terminals
- Where an 'on demand self-test' is referred to, this can be accessed via the 'diagnostic trouble code monitor' tab on the manufacturers approved diagnostic system
- Check DDW for open campaigns. Refer to the corresponding bulletins and SSMs which may be valid for the specific customer complaint and carry out the recommendations as required

The table below lists all Diagnostic Trouble Codes (DTCs) that could be logged in the Rear Differential Control Module, for additional Diagnosis and Testing information refer to the relevant Diagnosis and Testing Section. For additional information, refer to: External Controls (307-05 Automatic Transmission/Transaxle External Controls - TDV8 4.4L Diesel, Diagnosis and Testing).

DTC	DESCRIPTION	POSSIBLE CAUSES	ACTION
B1087-08	LIN Bus "A" - Bus Signal / Message Failures	■ LIN Bus "A" Error	■ Refer to the electrical circuit diagrams and check LIN input signal circuit for short, open circuit
B1087-81	LIN Bus "A" - Invalid serial data received	■ Transmission control module LIN message error: complement fault	■ Refer to the electrical circuit diagrams and check LIN input signal circuit for short, open circuit faults. Check Transmission control module for related DTCs and refer to relevant DTC Index
B1087-82	LIN Bus "A" - Alive / sequence counter incorrect / not updated	■ Transmission control module LIN message error: Alive counter fault	■ Refer to the electrical circuit diagrams and check LIN input signal circuit for short, open circuit faults. Check Transmission control module for related DTCs and refer to relevant DTC Index
B1087-83	LIN Bus "A" - Value of signal protection calculation incorrect	■ Transmission control module LIN message error: checksum fault	■ Refer to the electrical circuit diagrams and check LIN input signal circuit for short, open circuit faults. Check Transmission control module for related DTCs and refer to relevant DTC Index
B1087-87	LIN Bus "A" - Missing message	■ Transmission control module LIN message error: missing message	■ Refer to the electrical circuit diagrams and check LIN input signal circuit for short, open circuit faults. Check Transmission control module for related DTCs and refer to relevant DTC Index

B1142-62	Ignition Status 1 - Signal compare failure	■ Hard wired ignition and CAN powermode signals differ	■ Refer to the electrical circuit diagrams and check ignition supply circuit for short, open circuit
B123C-01	Dynamic Stability Control Status Indicator - General Electrical Failure	■ Dynamic stability control LED failure	■ Suspect transmission shift module. Check operation of the dynamic stability control switch status illumination. Check and install a new transmission shift module as required. Refer to the Warranty Policy and Procedures manual, or determine if any prior approval programme is in operation, prior to the installation of a new module /component
B123D-64	Dynamic Stability Control Button - Signal plausibility failure	■ Dynamic stability control switch may be stuck due to a faulty switch, or the user holding the switch pressed for a prolonged period. (Dynamic stability control switch detected as pressed for 30 seconds) (S1)	■ Check for normal Dynamic stability control switch functionality. If it operates normally then no further action required. If the Dynamic stability control switch fails to operate normally then it may be due to an internal fault. Check and install new transmission shift module as required. Refer to the Warranty Policy and Procedures manual, or determine if any prior approval programme is in operation, prior to the installation of a new module /component
B123F-01	Adaptive Speed Limiter Mode Indicator - General Electrical Failure	■ Adaptive Speed Limiter LED failure	■ Suspect transmission shift module. Check operation of the active speed limiter switch status illumination. Check and install new transmission shift module as required. Refer to the Warranty Policy and Procedures manual, or determine if any prior approval programme is in operation, prior to the installation of a new module/component
B1241-64	Adaptive Speed Limiter Button - Signal	■ May be due to a faulty switch, or the user holding the switch pressed for a prolonged period	■ Check for normal adaptive speed limiter switch functionality. If it operates normally then no further action required. If the adaptive speed limiter switch fails

	plausibility failure	(Adaptive Speed Limiter switch detected as pressed for 30 seconds)	to operate normally, it may be due to an internal fault. Check and install new transmission shift module as required. Refer to the Warranty Policy and Procedures manual, or determine if any prior approval programme is in operation, prior to the installation of a new module /component
B1242-64	Winter Button - Signal plausibility failure	■ May be due to a faulty switch or the user holding the switch pressed for a prolonged period. (Winter switch detected as pressed for 30 seconds)	■ Check for normal winter switch functionality. If it operates normally, then no further action is required. If the winter switch fails to operate normally it may be due to an internal fault. Check and install new transmission shift module as required. Refer to the Warranty Policy and Procedures manual, or determine if any prior approval programme is in operation, prior to the installation of a new module/component
B1243-01	Winter Button Mode Indicator - General Electrical Failure	■ Winter LED failure	■ Suspect transmission shift module, check operation of the winter switch status illumination. Check and install new transmission shift module as required. Refer to the Warranty Policy and Procedures manual, or determine if any prior approval programme is in operation, prior to the installation of a new module/component
B1244-64	Dynamic / Sport Button - Signal plausibility failure	■ May be due to a faulty switch or the user holding the switch pressed for a prolonged period. (Dynamic/Performance switch detected as pressed for 30 seconds)	■ Check for normal dynamic mode switch functionality. If it operates normally, then no further action is required. If the dynamic mode switch fails to operate normally, it may be due to an internal fault. Check and install new transmission shift module as required. Refer to the Warranty Policy and Procedures manual, or determine if any prior approval programme is in operation, prior to the installation of a new module/component
B1245-	Dynamic /	■ Dynamic / Sport LED Failure	

01	Sport Button Mode Indicator - General Electrical Failure		■ Suspect transmission shift module, check operation of the dynamic mode switch status illumination. Check and install new transmission shift module as required. Refer to the Warranty Policy and Procedures manual, or determine if any prior approval programme is in operation, prior to the installation of a new module/component
C113A-62	Wake up Control - Signal compare failure	■ Hardwired delayed power and CAN Bus Engine Running status differ.	■ Refer to the electrical circuit diagrams and check hardwired wake up (start stop illumination) input circuit for short, open circuit
P0603-44	Internal Control Module Keep Alive Memory (KAM) Error - Data memory failure	■ Transmission shift module Internal failure	■ Suspect transmission shift module. Check and install new transmission shift module as required. Refer to the Warranty Policy and Procedures manual, or determine if any prior approval programme is in operation, prior to the installation of a new module/component
P0604-44	Internal Control Module Random Access Memory (RAM) Error - Data memory failure	■ Transmission shift module Internal failure	■ Suspect transmission shift module. Check and install new transmission shift module as required. Refer to the Warranty Policy and Procedures manual, or determine if any prior approval programme is in operation, prior to the installation of a new module/component
P0605-45	Internal Control Module Read Only Memory (ROM) Error - Program memory failure	■ Transmission shift module Internal failure	■ Suspect transmission shift module. Check and install new transmission shift module as required. Refer to the Warranty Policy and Procedures manual, or determine if any prior approval programme is in operation, prior to the installation of a new module/component

P0606-2F	Control Module Processor - Signal erratic	■ Transmission shift module Internal failure	■ Suspect transmission shift module. Check and install new transmission shift module as required. Refer to the Warranty Policy and Procedures manual, or determine if any prior approval programme is in operation, prior to the installation of a new module/component
P0606-47	Control Module Processor - Watchdog / safety Micro controller failure	■ Transmission shift module Internal failure	■ Suspect transmission shift module.Check and install new transmission shift module as required. Refer to the Warranty Policy and Procedures manual, or determine if any prior approval programme is in operation, prior to the installation of a new module/component
P0705-09	Transmission Range Sensor A Circuit (PRNDL Input) - Component Failures	■ PRNDS sensor fault	■ Suspect transmission shift module. Check and install new transmission shift module as required. Refer to the Warranty Policy and Procedures manual, or determine if any prior approval programme is in operation, prior to the installation of a new module/component
P0705-46	Transmission Range Sensor A Circuit (PRNDL Input) - Calibration / parameter memory failure	■ PRNDS calibration missing/invalid	■ Suspect transmission shift module. Check and install new transmission shift module as required. Refer to the Warranty Policy and Procedures manual, or determine if any prior approval programme is in operation, prior to the installation of a new module/component
P0705-86	Transmission Range Sensor A Circuit (PRNDL Input) - Signal invalid	■ Received signal incorrect	■ Suspect transmission shift module. Check and install new transmission shift module as required. Refer to the Warranty Policy and Procedures manual, or determine if any prior approval programme is in operation, prior to the installation of a new module/component
P0814-	Transmission	■ PRNDS LED failure	Suspect transmission shift module. Check operation of

01	Range Display Circuit - General Electrical Failure		PRNDS display. Check and install new transmission shift module as required. Refer to the Warranty Policy and Procedures manual, or determine if any prior approval programme is in operation, prior to the installation of a new module/component
P081C-64	Park Input Circuit - Signal plausibility failure	■ Hardwired Park and Transmission control module position display signals are not consistent	■ Refer to electrical circuit diagrams and check Park input signal circuit for short, open circuit. Check Transmission control module for Park signal failure DTCs. Check operation of signal - should be set (equal to vehicle supply voltage) when transmission in P and un-set (equal to vehicle ground) when transmission in R,N,D,S
P084F-11	Park/Neutral Switch Output Circuit - Circuit short to ground	■ Park/neutral signal circuit short to ground	■ Refer to the electrical circuit diagrams and check the park /neutral signal circuit for short to ground
P084F-15	Park / Neutral Switch Output Circuit - Circuit short to battery or open	■ Park/neutral signal circuit short to power or open circuit	■ Refer to the electrical circuit diagrams and check the park /neutral signal circuit for short to power or open circuit
P176A-01	Transmission Range Selector Up and Down Position Circuit - General Electrical Failure	■ Raise/Lower mechanism up / down sensor fault	■ Cycle ignition, clear DTC and retest ■ If fault persists, check and install new transmission shift module as required. Refer to the warranty policy and procedures manual, or determine if any prior approval programme is in operation, prior to the installation of a new module/component
P176A-13	Transmission Range Selector Up and Down	■ Raise/Lower mechanism current sense fault	■ Cycle ignition, clear DTC and retest ■ If fault persists, check and install new transmission shift module as required. Refer to the warranty policy and

	Position Circuit - Circuit open		procedures manual, or determine if any prior approval programme is in operation, prior to the installation of a new module/component
P176A-19	Transmission Range Selector Up and Down Position Circuit - Circuit current above threshold	■ Raise/Lower mechanism motor over current	■ Cycle ignition, clear DTC and retest ■ If fault persists, check and install new transmission shift module as required. Refer to the warranty policy and procedures manual, or determine if any prior approval programme is in operation, prior to the installation of a new module/component
P176A-94	Transmission Range Selector Up and Down Position Circuit - Unexpected operation	■ Motor current detected while gear selector knob not moving up or down for 100ms	■ Cycle ignition, clear DTC and retest ■ If fault persists, check and install new transmission shift module as required. Refer to the warranty policy and procedures manual, or determine if any prior approval programme is in operation, prior to the installation of a new module/component
P176B-71	Transmission Range Selector Up and Down Position Control Error - Actuator stuck	■ Transmission control switch raise /lower operation has been forced /abused ■ Level of software in the transmission control switch is incorrect ■ Transmission control switch internal failure	■ Check for evidence of obstruction or abuse and rectify as appropriate ■ Using the manufacturer approved diagnostic system check and install the latest relevant level of software to the transmission control switch ■ Using the manufacturer approved diagnostic system, clear the DTCs and retest. If the fault persists, install a new transmission control switch
P176C-07	Transmission Range Selector Lock Control Error -	■ Gear selector movement detected while locked. DTC set after 100ms. Park lock failure transmission shift module has	■ Check for normal shift interlock lock/unlock operation, and check for short circuit DTCs. If the transmission shift module locks and unlocks normally, then no further action is required. If the transmission shift module fails to lock

	Mechanical Failures	detected that the selector has been turned while a lock request has been received from the transmission control module. This is usually due to the driver releasing the brake pedal with the selector in between positions, and does not represent a fault.	normally when fully in the P position, it may be due to an internal fault, check and install new transmission shift module as required. Refer to the Warranty Policy and Procedures manual, or determine if any prior approval programme is in operation, prior to the installation of a new module/component
P176C-11	Transmission Range Selector Lock Control Error - Circuit short to ground	▪ Short to ground detected while solenoid active for 100ms.	▪ Suspect transmission shift module, check operation of the shift interlock, check and install new transmission shift module as required. Refer to the Warranty Policy and Procedures manual, or determine if any prior approval programme is in operation, prior to the installation of a new module/component
P176C-12	Transmission Range Selector Lock Control Error - Circuit short to power	▪ Short to power detected for 100ms.	▪ Suspect transmission shift module, check operation of the shift interlock, check and install new transmission shift module as required. Refer to the Warranty Policy and Procedures manual, or determine if any prior approval programme is in operation, prior to the installation of a new module/component
P176C-73	Transmission Range Selector Lock Control Error - Actuator stuck closed	▪ Solenoid Unlock Failure. This may be due either to the user applying a prolonged rotational force against the selector lock mechanism while it is attempting to unlock, or due to an internal failure	▪ Check for normal shift interlock lock/unlock operation. If the transmission shift module locks and unlocks normally then no further action is required. If the transmission shift module fails to lock and unlock normally it may be due to an internal fault. Check and install new transmission shift module as required. Refer to the Warranty Policy and Procedures manual, or determine if any prior approval programme is in operation, prior to the installation of a new module/component

U0001-88	High Speed CAN Communication Bus - Bus off	■ HS CAN Failure (Bus Off)	■ Refer to the electrical circuit diagrams and check CAN bus for short, open circuit
U0100-00	Lost Communication With ECM/PCM "A" - Missing message	■ Lost communication with the engine control module ■ Engine speed signal not received for 450mS (S3)	■ Refer to the electrical circuit diagrams and check the CAN Bus connection to the engine control module for short, open circuit. Check the engine control module for related DTCs and refer to the relevant DTC Index
U0100-87	Lost Communication With ECM/PCM "A" - Missing message	■ Lost communication with the engine control module ■ Engine speed signal not received for 450mS (S3)	■ Refer to the electrical circuit diagrams and check CAN connection to Engine Control Module (ECM) for short, open circuit. Check ECM for related DTCs and refer to the relevant DTC Index
U0101-00	Lost Communication with TCM - Missing message	■ Lost communication with the transmission control module ■ TCM_PosDisp signal not received for 75mS. (S3)	■ Refer to the electrical circuit diagrams and check the CAN Bus connection to the transmission control module for short, open circuit. Check the transmission control module for related DTCs and refer to the relevant DTC Index
U0101-87	Lost Communication with Transmission Control Module (TCM) - Missing message	■ CAN harness link between Gear Shift Control Module (GSM) and Transmission Control Module (TCM) network malfunction	■ Using the manufacturer approved diagnostic system, check Transmission Control Module (TCM) for DTCs and refer to the relevant DTC Index. Using the manufacturer approved diagnostic system, carry out network integrity test. Refer to the electrical circuit diagrams and check Transmission Control Module (TCM) power and ground circuits for open circuit. Check CAN harness between Gear Shift Control Module (GSM) and Transmission Control Module (TCM), repair as necessary
U0121-	Lost		

00	Communication With Anti-Lock Brake System (ABS) Control Module - Missing message	■ Lost communication with the anti-lock brake system (ABS) control module ■ Message containing TCSSwitchSports is not received for 450mS. (S3)	■ Refer to the electrical circuit diagrams and check the CAN Bus connection to the anti-lock brake system (ABS) control module for short, open circuit. Check the anti-lock brake system (ABS) control module for related DTCs and refer to the relevant DTC Index
U0121-87	Lost Communication With Anti-Lock Brake System (ABS) Control Module - Missing message	■ CAN harness link between Gear Shift Control Module (GSM) and Anti-Lock Brake System (ABS) Control Module network malfunction	■ Using the manufacturer approved diagnostic system, check Anti-Lock Brake System (ABS) Control Module for DTCs and refer to the relevant DTC Index. Using the manufacturer approved diagnostic system, carry out network integrity test. Refer to the electrical circuit diagrams and check Anti-Lock Brake System (ABS) Control Module power and ground circuits for open circuit. Check CAN harness between Gear Shift Control Module (GSM) and Anti-Lock Brake System (ABS) Control Module, repair as necessary
U0140-00	Lost Communication With Body Control Module - No sub type information	■ CAN harness link between Gear Shift Control Module (GSM) and Body Control Module (BCM) network malfunction	■ Using the manufacturer approved diagnostic system, check Body Control Module (BCM) for DTCs and refer to the relevant DTC Index. Using the manufacturer approved diagnostic system, carry out network integrity test. Refer to the electrical circuit diagrams and check Body Control Module (BCM) power and ground circuits for open circuit. Check CAN harness between Gear Shift Control Module (GSM) and Body Control Module (BCM), repair as necessary
U0155-00	Lost Communication With Instrument Panel Cluster	■ Lost communication with instrument panel cluster ■ Message containing Powermode is not received for 350mS. (S3)	■ Refer to the electrical circuit diagrams and check the CAN Bus connection to the instrument panel cluster for short, open circuit. Check the instrument panel cluster for related DTCs and refer to the relevant DTC Index

	(IPC) Control Module - Missing message		
U0300-00	Internal Control Module Software Incompatibility - No sub type information	■ Invalid master configuration ID received	■ Re-configure the RJB using the manufacturer approved diagnostic system. Clear DTC and re-test, if DTC remains suspect the transmission shift module. Check and install a new module as required. Refer to the Warranty Policy and Procedures manual, or determine if any prior approval programme is in operation, prior to the installation of a new module/component
U0401-92	Invalid Data Received From ECM/PCM - Performance or incorrect operation	■ Jaguar Drive Optimisation Winter/ Performance modes not available. Fault message if a Jaguar Drive Optimization mode switch is pressed ■ Message received from Engine Control Module indicates it is unable to support Jaguar Drive Optimisation modes.	■ Check ECM for related DTCs and refer to the relevant DTC Index
U0402-64	Invalid Data Received from Transmission control module - Signal plausibility failure	■ Implausible lock request received	■ Unexpected lock data received from Transmission control module. Check for additional communication DTCs and follow relevant service actions. If no other communication DTCs present, check Transmission control module for related DTCs and refer to the relevant DTC Index
U0402-81	Invalid Data Received from Transmission	■ Transmission control module CAN message error: complement fault	

	control module - Invalid serial data received		■ Check Transmission control module for DTCs and refer to the relevant DTC Index. If no fault found then refer to the electrical circuit diagrams and check CAN bus for short, open circuit
U0402-82	Invalid Data Received from Transmission control module - Alive / sequence counter incorrect / not updated	■ Alive Counter fault detected (Stuck, jumps or Fault Flag). More than 1 fault in 200ms.	■ Check Transmission control module for DTCs and refer to the relevant DTC Index. If no fault found then refer to the electrical circuit diagrams and check CAN bus for short, open circuit
U0402-83	Invalid Data Received from Transmission control module - Value of signal protection calculation incorrect	■ Calculated checksum for Transmission control module message data does not match received checksum. More than 1 fault in 200ms.	■ Check Transmission control module for DTCs and refer to the relevant DTC Index. If no fault found then refer to the electrical circuit diagrams and check CAN bus for short, open circuit
U0402-92	Invalid Data Received from Transmission control module - Performance or incorrect operation	■ Message received from Transmission Control Module indicates it is unable to support Jaguar Drive Optimisation modes.	■ Check Transmission control module for DTCs and refer to the relevant DTC Index
U0415-92	Invalid Data Received From	■ Information only. Message received from Anti-Lock Brake	■ Check ABS module for DTCs and refer to the relevant DTC Index

	Anti-Lock Brake System (ABS) Control Module - Performance or incorrect operation	System module indicates it is unable to support Jaguar Drive Optimisation modes.	
U0422-08	Invalid Data Received From Body Control Module - Bus Signal / Message Failures	■ Update bit for powermode signal not received from central junction box. Possible CAN fault	■ Check central junction box for DTCs and refer to the relevant DTC Index
U0422-81	Invalid Data Received From central junction box - Invalid serial data received	■ Invalid powermode complement data received from central junction box	■ Check central junction box for DTCs and refer to the relevant DTC Index
U0422-92	Invalid Data Received From central junction box - Performance or incorrect operation	■ Message received from power assisted steering module indicates that it is unable to support Jaguar Drive Optimisation modes	■ Check instrument cluster and central junction box for DTCs and refer to the relevant DTC Index. If no fault found then refer to the electrical circuit diagrams and check CAN bus for short, open circuit
U0423-92	Invalid Data Received From Instrument Panel Control Module (IPC) - Performance or	■ CAN signal error	■ Using the manufacturer approved diagnostic system, check Instrument Panel Control Module (IPC) and Central Junction Box (CJB) for DTCs and refer to the relevant DTC Index. Using the manufacturer approved diagnostic system, carry out network integrity test. Refer to the electrical circuit diagrams and check Instrument Panel

	incorrect operation		Control Module (IPC) and Central Junction Box (CJB) power and ground circuits for open circuit. Check CAN harness between Gear Shift Control Module (GSM) and Instrument Panel Control Module (IPC) and Central Junction Box (CJB), repair as necessary
U043A-92	Invalid Data Received From Suspension Control Module "B" - Performance or incorrect operation	■ Information only, Suspension Module unable to support Jaguar Drive Optimisation modes(Invalid Data is received from the SUMB)	■ Check Suspension Control Module "B" for related DTCs and refer to the relevant DTC Index
U101A-86	Lost Communication With Transmission control module (Multiple Bus) - Signal invalid	■ CAN and LIN bus failed. FOR INFORMATION ONLY - No action necessary if no additional CAN or LIN DTCs present	■ Check for Transmission control module CAN and/or LIN DTCs present in transmission shift module then refer to actions for these specific DTCs. If no additional Transmission control module CAN and/or LIN DTCs present in transmission shift module then no further action required
U1A14-04	CAN Initialization Failure - System Internal Failures	■ Signal configuration not present / incorrect.	■ Suspect transmission shift module, check and install new transmission shift module as required. Refer to the Warranty Policy and Procedures manual, or determine if any prior approval programme is in operation, prior to the installation of a new module/component
U2012-4A	Car Configuration Parameter(s) - Incorrect component installed	■ Mismatch detected between vehicle configuration and installed gear selector variant. Check correct part fitted, and if fault still present, check vehicle configuration	■ Check correct transmission shift hardware variant is installed for the vehicle configuration - i.e. for supercharged variants, transmission shift modules with dynamic mode switch should be installed only. All other vehicles should contain hardware without the dynamic mode switch. If correct hardware installed then check

			/amend car configuration parameters using the manufacturer approved diagnostic system
U2100-00	Initial Configuration Not Complete - No sub type information	■ Transmission shift module not fully configured.	■ Suspect transmission shift module, check and install new transmission shift module as required. Refer to the Warranty Policy and Procedures manual, or determine if any prior approval programme is in operation, prior to the installation of a new module/component
U3003-16	Battery Voltage - Circuit voltage below threshold	■ Low voltage detected at Transmission shift module (Battery voltage < 8.5V for 660mS)	■ Ensure battery is in a fully charged and serviceable condition, refer to the battery care manual. Check ECM for alternator related DTCs, Check battery power feed circuit to Transmission shift module, Clear DTCs, Cycle ignition
U3003-17	Battery Voltage - Circuit voltage above threshold	■ High voltage detected at Transmission shift module (Battery voltage > 16.5V for 660mS)	■ Check ECM for alternator/over charging related DTCs, Clear DTCs, Cycle ignition
U3003-62	Battery Voltage - Signal compare failure	■ Measured voltage different to CAN received voltage (Voltage difference > 2V for > 10s)	■ Compare vehicle voltage to voltage present at the Transmission shift module, Repair fault, Clear DTCs, Cycle ignition

GENERAL INFORMATION

DESCRIPTION AND OPERATION

HOW TO USE THIS MANUAL

The manual is structured into five main sections, General Information, Chassis, Powertrain, Electrical and Body and Paint with each section dealing with a specific part of a vehicle system.

Each of the five main sections contain sub-sections dealing with items which form a part of that specific system.

Pages at the start of the manual list all sections available. Each section has a contents list detailing, where applicable, Specifications, Description and Operation, Diagnosis and Testing, General Procedures and Repair Procedures.

Where components need to be removed or disassembled in sequence, each operation in the sequence will be identified numerically and also graphically in an accompanying illustration.

NOTE:

Dimensions quoted are to design engineering specifications with service limits quoted, where applicable.

WORKSHOP MANUAL ORGANIZATION

The five main sections, together with the areas which they cover are given below:

- **Section 1** - General Information.
- **Section 2** - Chassis.
- **Section 3** - Powertrain.
- **Section 4** - Electrical.
- **Section 5** - Body and Paint.

Sub-section numbers appear after the initial section number, for example, **Section 412-03** covers air conditioning, which is part of the electrical section.

In the number given above, the first digit of the number **'4'** indicates the section **i.e. Electrical** .

The second and third digits **'12'** of the number indicate the vehicle system **i.e. Air Conditioning** .

The last two digits of the number **'03'** indicate the part of the system covered by the sub-section **i.e. Air Conditioning Compressor** .

2012.0 RANGE ROVER (LM), 100-00

GENERAL INFORMATION

DESCRIPTION AND OPERATION

Safety Notice

Appropriate service methods and correct repair procedures are essential for the safe, reliable operation of all motor vehicles, as well as the safety of the person doing the work. This manual provides general directions for accomplishing service and repair work with tested effective techniques. Following them will help assure reliability.

There are numerous variations in procedures, techniques, tools, and parts for servicing vehicles, as well as in the skill of the person doing the work. This manual cannot possibly anticipate all such variations and provide advice or cautions as to each. Accordingly, anyone who departs from the instructions provided in the manual must first establish that neither personal safety or vehicle integrity is compromised from choices of methods, tools or parts.

2012.0 RANGE ROVER (LM), 100-00

GENERAL INFORMATION

DESCRIPTION AND OPERATION

WARNINGS:

- Fuel may not give adequate warning before toxic or harmful effects arise.
- Exposure to fuel can be harmful and can cause severe health damage or death.
- Extreme care must be exercised when handling hot fluids. Always wash off spilled fluids from affected areas of skin immediately.
- Highly flammable mixtures are always present and may ignite when working on fuel systems. Do not allow naked flames, sparks or lighted substances to come near fuel related components.
- Fuel must not be used as a cleaning agent.
- Keep fuel containers tightly closed, out of direct sunlight and in a cool area. Keep away from heat sources, ignition sources and oxidizing agents.

- SKIN CONTACT: Excessive or prolonged skin contact with diesel fuel may cause serious skin disorders including skin cancer.
- SKIN CONTACT: Fuel is mildly irritating to the skin and may cause dermatitis due to defatting effect. Remove contaminated clothing. Wash affected areas of skin with soap and water. Seek medical attention for any persistent skin irritation or abnormality. Wash contaminated clothing before reuse.
- EYE CONTACT: Fuel is mildly irritating to the eyes. Flush with plenty of running water, blinking as often as possible. Do not force the eyelid open. Seek medical attention for any persistent eye irritation or abnormality.
- SWALLOWED: Fuel is moderately toxic and tends to foam on vomiting. If drawn into the lungs, inflammation may develop. Do not induce vomiting. If spontaneous vomiting occurs place the victim in a forward position to reduce the risk of fuel being drawn into the lungs. Give nothing by mouth. If breathing but unconscious, place in the recovery position. If breathing has stopped, apply artificial respiration. Seek immediate medical attention.
- INHALED: Fuel is toxic to the respiratory and other body systems. Exposure may result in various symptoms including drowsiness, unconsciousness or severe health damage. Move a victim to fresh air. Keep a victim warm and at rest. If unconscious, place in the recovery position. If not breathing, apply artificial respiration. Give cardiac massage if necessary. Seek immediate medical attention.

CAUTIONS:

- Fuel injection equipment is manufactured to very precise tolerances and fine clearances. It is essential that absolute cleanliness is observed when working with these components.
- Make sure that the workshop area in which the vehicle is being worked on is as clean and as dust free as possible.

GENERAL INFORMATION

DESCRIPTION AND OPERATION

Road or rolling road testing may be carried out for various reasons and a procedure detailing pre-test checks, through engine starting and stopping, pre-driving checks, on-test checks to final checks on completion of the test are given.

Unless complete vehicle performance is being checked, the full road test procedure need not be carried out. Instead, those items particularly relevant to the system(s) being checked can be extracted.

PRE-TEST CHECKS

⚠ WARNING:

If the brake system hydraulic fluid level is low, pedal travel is excessive or a hydraulic leak is found, do not attempt to road test the vehicle until the reason for the low fluid level, excessive pedal travel or hydraulic leak is found and rectified.

It is suggested that pre-test and functional tests of those systems/circuits which affect the safe and legal operations of the vehicle, such as brakes, lights and steering, should always be carried out before the road or rolling road test.

- Engine oil level
- Engine coolant level
- Tires, for correct pressure, compatible types and tread patterns, and wear within limits.
- There is sufficient fuel in the tank to complete the test.
- Check all around the engine, transmission and under the vehicle for oil, coolant, hydraulic and fuel leaks. Make a note of any apparent leaks and wipe off the surrounding areas to make it easier to identify the extent of the leak on completion of the test.

STARTING THE ENGINE

NOTE:

On initial drive away from cold and within the first 1.5 km (1 mile), do not depress accelerator pedal beyond half travel until the vehicle has attained a minimum speed of 25 km/h (15 miles/h). Never operate at high engine speed or with the accelerator pedal at full travel whilst the engine is cold.

With the ignition switched off, check:

- The parking brake is applied.
- **Automatic gearbox:** The selector lever is in 'P' - Park
- **Transfer case:** 'H' - High is selected
- All instrument gauges read zero.

With the ignition switched on, check:

- Ignition controlled warning lights come on.
- Engine temperature gauge registers a reading compatible with the engine temperature.
- Fuel gauge registers a reading appropriate to the fuel level in the tank.
- The operation of the parking brake warning light and fluid level warning indicator light.

ON ROAD TEST CHECK:

CAUTION:

At commencement of road testing, check the brake operation while still travelling at low speed before continuing with the test. If the brakes pull to one side, or appear to be otherwise faulty, do not continue with the road test until the fault has been found and rectified.

- The parking brake releases completely.
- Gear changing is smooth, and there are no abnormal noises or vibrations from the gearbox.
- The engine power output is satisfactory, acceleration is smooth and accelerator pedal operation is not stiff or heavy, and engine speed returns to idle correctly.
- There is no excessive or abnormally colored smoke from the engine under normal driving, heavy load or overrun conditions.
- Steering operation is smooth, accurate, not excessively heavy or with excessive free play or vibration. Does not pull to one side and self centres smoothly after cornering.
- All instruments register the correct readings and operate correctly.
- Switches and controls operate smoothly and positively, warning or indicator lights operate correctly and the direction indicator control self cancels when the steering is returned to the straight ahead position.
- Heating and ventilation systems work correctly and effectively.
- Brakes operate efficiently.

BRAKE TESTING

Avoid brake testing on busy roads where it can cause inconvenience or danger to other road users.

CAUTION:

Brake testing which includes heavy brake applications should not be carried out with new brake pads /discs until the components have bedded-in. New brake friction components will not reach full efficiency until the bedding-in process is complete. Note that when new parking brake shoes or rear brake discs have been installed, it is essential that the 'bedding-in' procedure given in Section 206-05 - Parking Brake Removal and Installation is carried out.

Test the brakes at several speeds within the normal operating range using both light and heavy pedal pressure. Note any tendency to snatch, pull or drag, and any undue delay in application or release.

Allow the vehicle to coast and note any tendency to pull to one side, or evidence that the brakes are binding.

After stopping the vehicle (not immediately after a period of heavy braking), carefully check the brake temperature. A disc which feels appreciably hotter than the others, could indicate that the pads on that disc are binding.

After completion of the test, check for:

- Oil, coolant, hydraulic, air and fuel leaks.

- Abnormal temperature of any moving components or assemblies, e.g. wheel hubs, transmission etc., which might indicate over tightness or lack of lubrication.

ROLLING ROAD TESTING

Four-Wheel Rolling Road

CAUTION:

When utilising a four-wheel rolling road for testing, ensure all relevant health and safety requirements are adhered to.

Provided that front and rear rollers are rotating at identical speeds and that normal workshop safety standards are applied, there is no speed restriction during testing except any that may apply to the tires.

Ensure that the parking brake is released prior to engaging roller driving mechanism.

Two-Wheel Rolling Road

CAUTION:

On no account should an attempt be made to carry out any form of testing on a two-wheel rolling road.

GENERAL INFORMATION

DESCRIPTION AND OPERATION

SOLVENTS

WARNING:

Always handle all solvents, sealers and adhesives with extreme care. Some contain chemicals or give off fumes which can be dangerous to health. Always follow the manufacturers instructions. If in doubt about any substance, particularly a solvent, DO NOT use it.

CAUTION:

If in doubt about the suitability of any proprietary solvent or sealer for a particular application, contact the manufacturer of the product for information.

The Health and Safety Precautions subsection refers to some commonly used chemicals and materials, hazards associated with their use, and safety measures to be taken. Some of these chemicals may be included as an ingredient in a sealer or adhesive.

SEALERS

Certain procedures in this manual involve the use of sealants during installation of components. Where a sealant is required, the application, together with the Land Rover part number is given in the General Specification at the start of each section and an instruction that a sealant must be used appears in the relevant repair procedure.

It is essential that the sealant(s) specified for a particular procedure are used, DO NOT use any other sealant.

Always remove traces of old sealant using a plastic scraper or suitable solvent, never use emery cloth or metal scrapers.

ADHESIVES

Whenever a procedure involves the use of an adhesive, the adhesive specified must be used and the manufacturer's instructions regarding application together with any health and safety precautions must be followed.

GENERAL INFORMATION

DESCRIPTION AND OPERATION

SERVICE TOOLS

Special service tools have been developed to facilitate removal, dismantling and assembly of mechanical components in a cost effective and time efficient manner. The use of such special tools also helps prevent the potential for damage to components.

Some operations described in this manual cannot be carried out properly without the aid of the relevant service tools.

All orders and enquiries should be sent direct to: https://jlrequipment.service-solutions.com.

GENERAL INFORMATION

DESCRIPTION AND OPERATION

VEHICLE IN WORKSHOP

When working on a vehicle in the workshop always make sure that:

- Where practicable, the parking brake is applied and the wheels are securely chocked to prevent the vehicle moving forwards or backwards.
- Whenever possible, the ignition key is removed before any work is carried out on the vehicle.
- If the engine is to be run, there is adequate ventilation, or an extraction hose is used to remove exhaust fumes.
- There is adequate room to raise the vehicle and remove the wheels, if necessary.
- Fender covers are always installed if any work is to be carried out in the engine compartment.

- Where practicable, the battery is disconnected if working on the engine, underneath the vehicle, or if the vehicle is raised.

CAUTIONS:

- Prior to disconnecting the battery, refer to the Electrical Section of this manual - Battery disconnection /connection and the following paragraphs.
- When electric arc welding on a vehicle, always disconnect the generator wiring to prevent the possibility of a surge of current causing damage to the internal components of the generator.

- If using welding equipment on the vehicle, a suitable fire extinguisher is readily available.

BATTERY - GENERAL

WARNING:

It is essential that a period of 10 minutes elapses after the battery is disconnected before any work is undertaken on any part of the SRS.

CAUTIONS:

- After re-connecting the battery, the steering wheel must be turned to full left-hand and right-hand lock (with engine running). This allows the DSC system to relearn the steering wheel position. Failure to do so will result in a variety of instrument warning lights being illuminated.
- Prior to carrying out any procedures which involve disconnecting/connecting the battery, refer to the Electrical Section of this manual - Battery disconnection/connection.
- A discharged battery condition may have been caused by an electrical short circuit. If this condition exists there will be an apparently live circuit on the vehicle even when all normal circuits are switched off. This can cause arcing when the jumper cables are connected.

Jump Starting a Vehicle

CAUTIONS:

- While it is not recommended that a vehicle is jump started, it is recognized that this may occasionally be the only practical way to mobilize a vehicle. Reference should be made to the following and also to the Electrical Section of this manual - Jump Starting.
- It is advisable not to use starter/charger sets for jump starting but if this is unavoidable, make sure that the sets are not used in the 'START' mode.

- Always make sure that the jumper cables are adequate for the task.
- Always make sure that the slave battery is of the same voltage (12 volts) as the vehicle battery. The batteries must be connected in parallel.

- Make sure that the battery terminals of both batteries are fully tightened.
- Where another vehicle is used to jump start a disabled vehicle, make sure that the two vehicles are not touching.
- It is advisable that the engine of the donor vehicle is switched off during jump starting; take care to make sure that the battery of the donor vehicle does not also become discharged.
- Always make sure that switchable electric circuits are OFF before connecting jump cables. This reduces the risk of arcing occurring when the final connection is made.

Following jump starting of a disabled vehicle, the discharged battery must be checked for serviceability and recharged as soon as possible to avoid permanent damage.

Do not rely on the generator to restore a discharged battery. For a generator to recharge a battery, it would take in excess of eight hours continuous driving with no additional loads placed on the battery.

Trickle charging (defined as voltages <16 volts) may be carried out with the battery connected. Make sure that the battery terminals are fully tightened prior to trickle charging.

CAUTION:

Boost charging may only be carried out with the battery disconnected from the vehicle.

TOWING THE VEHICLE

WARNING:

When towing is necessary, reference must be made to the Jacking, Lifting and Towing Section of this Manual.

When the vehicle is being towed the ignition switch must be in position II (steering lock released and warning lights illuminated). Only then will the steering, turn signal lamps, horn and stop lamps be operational. Failure to follow these instructions may result in personal injury. It must be noted that with the engine not running, the power steering and brake booster will be inoperative therefore, greater effort will be needed to steer the vehicle and apply the brakes.

GENERAL INSTALLATION INSTRUCTIONS

COMPONENT REMOVAL

Whenever possible, clean components and the surrounding area before removal.

- Blank off openings exposed by component removal.
- Following disconnection, seal fuel, oil or hydraulic lines immediately using suitable blanking plugs or caps.
- Seal open ends of exposed oil ways using suitable tapered hardwood plugs or conspicuous plastic plugs.
- Immediately a component is removed, place it in a suitable container; use a separate container for each component and its associated parts.
- Clean bench and provide marking materials, labels and containers before disassembling components.

DISASSEMBLING

Observe scrupulous cleanliness when disassembling components, particularly when brake, fuel, air suspension or hydraulic system parts are disassembled. A particle of dirt or cloth fragment could cause a serious malfunction if trapped in these systems.

- Blow out all tapped holes, crevices, oil ways and fluid passages with dry, compressed air.

⚠ WARNING:

Suitable eye protection must be worn.

- Discard all seals and O-rings and replace with new when reassembling.
- Use suitable marker ink to identify mating parts, do not use a scriber or centre punch as they could initiate cracks or distortion.
- Wire or tape mating parts together where necessary to prevent accidental interchange.
- Suitably identify parts which are to be renewed and parts requiring further inspection. Keep these parts separate.
- To make sure that the correct replacement part has been obtained, do not discard a part due for renewal until after comparing it with the new part.

CLEANING COMPONENTS

Always use cleaning agents which are suitable for the work being undertaken and the components being cleaned. NEVER use gasoline (petrol) as a cleaning agent (degreaser). Always make sure that the component being cleaned is compatible with the cleaning agent.

Always follow the manufacturer's instructions regarding the use of cleaning agents and make sure that the environment in which the work is being undertaken is suitable. See Health and Safety Precautions for further information regarding cleaning.

GENERAL INSPECTION OF COMPONENTS

All components should be inspected for wear or damage before reassembling.

- Always make sure that component to be inspected is clean and free from oil or grease.
- When a component is to be checked dimensionally against design specified values, use the appropriate measuring equipment i.e. micrometers, verniers, surface plates, dial test indicators (DTI).
- Always make sure that all measuring equipment is correctly calibrated before use.
- Reject a component which is not within specified values/limits or if it appears to be damaged.
- A component may be reinstalled if dimensions obtained during checking are at the maximum tolerance limit and it is in an undamaged condition.
- Bearing journal clearances should be checked where necessary using Plastigage.
- Gaskets, seals and O-ring seals are to be re-used unless damaged.

JOINTS AND JOINT FACES

All gaskets should be installed dry unless stated otherwise. Always apply the specified lubricant to O-rings and install O-rings using the fingers only.

Use gasket removal spray and/or plastic scrapers to remove traces of old gasket.

CAUTION:

DO NOT use metal scrapers or emery cloth as these may damage the sealing surfaces.

Many joints use sealants instead of gaskets as the sealing medium. Where this is the case, the sealant together with its part number will be found listed in the relevant repair operation and also in the sealants table.

CAUTION:

Always remove all traces of the old sealant prior to reassembly. Use plastic scrapers, specified solvents where available or dry, lint free cloth. DO NOT use metal scrapers or emery cloth as these may damage the sealing surfaces. Make sure that sealing surfaces are free from oil or grease as sealants will not adhere properly to contaminated surfaces.

Do not allow sealant to enter tapped holes or oil ways.

LOCKING DEVICES

Always replace locking devices with one of the same design and of the correct size.

TAB WASHERS

Always release locking tabs before loosening fixings, do not re-use tab washers.

LOCKNUTS

Always use a backing spanner when loosening and tightening locknuts, brake and fuel pipe unions.

ROLL PINS

Always install new roll pins of the correct size.

CIRCLIPS

Always install new circlips ensuring that they are of the correct size for the groove.

WOODRUFF KEYS

Woodruff keys may be re-used provided there is no indication of wear or distortion.

Remove any burrs from edges of keyways using a fine file.

SPLIT PINS

Never attempt to straighten and re-use a split pin, always make sure that replacement pins are of the correct size for the hole in which they are to be installed.

SCREW THREADS

- Damaged nuts, bolts and screws must always be discarded. Attempting to recut or repair damaged threads with a tap or die impairs the strength and fit of the threads and is not recommended.

> **NOTE:**
>
> During certain repair operations, it may be necessary to remove traces of thread locking agents using a tap. Where this is necessary, the instruction to do so will appear in the relevant operation and it is essential that a tap of the correct size and thread is used.

- Some bolts are coated with a thread locking agent and unless stated otherwise, they must not be re-used. New bolts having the same part number as the original must always be installed. When nuts or bolts are to be discarded, the repair operation and relevant torque chart will include an instruction to that effect. Do not use proprietary thread locking agents as they may not meet the specification required. See also Encapsulated ('Patched') Bolts and Screws.
- Always make sure that replacement nuts and bolts are at least equal in strength to those that they are replacing. Castellated nuts must not be loosened to accept a split pin except in recommended cases when this forms part of an adjustment.
- Do not allow oil or grease to enter blind holes, the hydraulic action resulting from tightening the bolt or stud can split the housing and also give a false torque reading.
- Always tighten a nut, bolt or screw to the specified torque figure, damaged or corroded threads can give a false torque reading.

- Nut and bolt loosening and tightening sequences, where given, must ALWAYS be followed. Distortion of components or faulty sealing of joints will result if the sequences are not followed. Where an instruction is given to tighten in stages, these stages must be adhered to; do not attempt to combine stages particularly where certain stages involve tightening by degrees.
- To check or re-tighten a fixing to a specified torque, first loosen a quarter of a turn, then retighten to the specified torque figure.
- Unless instructed otherwise, do not lubricate bolt or nut threads prior to installation.

Where it is stated that bolts and screws may be re-used, the following procedures must be carried out:

- Check that threads are undamaged.
- Remove all traces of locking agent from the threads.

CAUTION:

DO NOT use a wire brush; take care that threads are not damaged.

- make sure that threads are clean and free from oil or grease.
- Apply the specified locking agent to the bolt threads.

BOLT AND NUT IDENTIFICATION

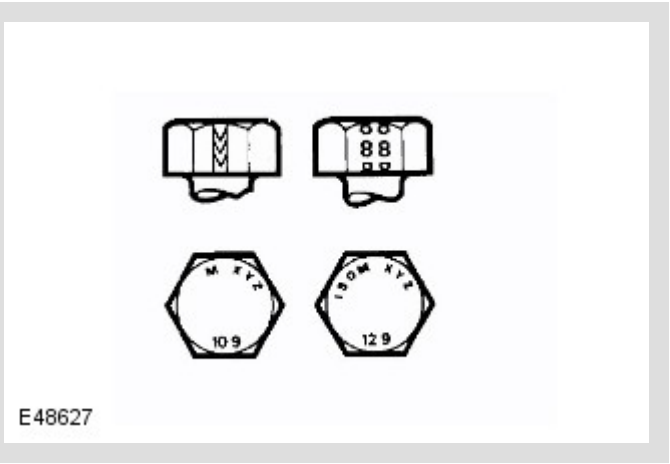

An ISO metric bolt or screw made of steel and larger than 6 mm in diameter can be identified by either of the symbols ISO M or M embossed or indented on top of the bolt head.

In addition to marks identifying the manufacturer, the top of the bolt head is also marked with symbols indicating the strength grade e.g. 8.8, 10.9, 12.9, 14.9. Alternatively, some bolts and screws have the M and strength grade symbol stamped on the flats of the hexagon.

ENCAPSULATED ('PATCHED') BOLTS AND SCREWS



Encapsulated ('patched') bolts and screws have a thread locking agent applied to the threads during manufacture. Most thread locking agents are colored, the band of color extending for 360° around the thread. Some locking agents however, are neutral in color and may not be so easily identified apart from a slightly darker area of thread where the locking agent has been applied. The locking agent is released and activated by the tightening process and is then chemically cured to provide the locking action.

SELF-LOCKING BOLTS AND SCREWS

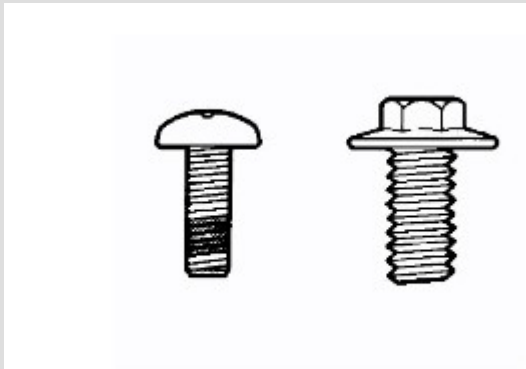

Unless stated in a specific repair procedure, self-locking bolts and screws i.e. nylon patched or trilobular thread can be re-used provided that resistance is felt when the locking portion enters the female thread.

Nylon patched bolts and screws have a locking agent either applied to, or inserted in the threaded portion. They are identified by the presence of a colored section of thread extending approximately 180° around the thread or by a colored plug inserted into the bolt.

Trilobular bolts have a special thread form which creates a slight interference with the thread of the hole or nut into which it is screwed.

CAUTION:

Do Not re-use self-locking fasteners in critical locations e.g. drive plates/flywheel or engine bearings. Do not install non self-locking fasteners where a self-locking fastener is specified.

Trilobular bolts should not be used as a substitute for patched bolts.

NUT IDENTIFICATION

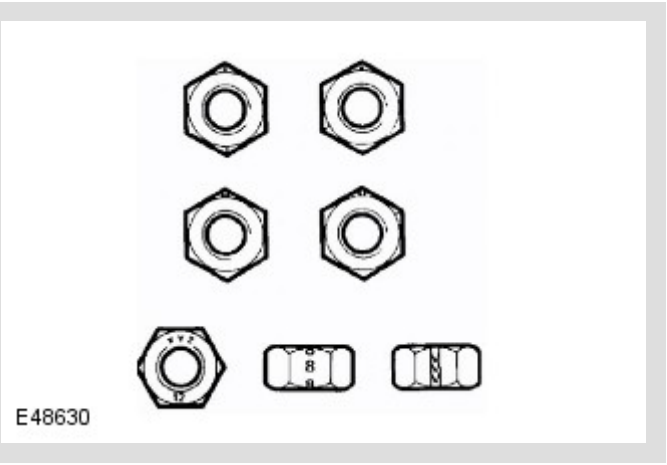

A nut with an ISO metric thread is marked on one face or one of the hexagonal flats with the strength grade symbol 8, 12, 14. Some nuts with the strength grade 4, 5 or 6 are also marked and some have the metric symbol M on the hexagonal flat opposite the strength grade marking.

A clock face system is sometimes used as an alternative method of indicating the strength grade. The external chamfers or a face of the nut is marked in a position relative to the appropriate hour mark on a clock face to indicate the strength grade.

A dot is used to locate the 12 o'clock position and a dash to indicate the strength grade. If the grade is above 12, two dots identify the 12 o'clock position.

When tightening a slotted or castellated nut, never loosen it to insert a split pin except where specified as part of an adjustment procedure. If difficulty is experienced in correctly positioning the slot, alternative washers or nuts should be selected.

Where a nut is tightened to adjust or maintain bearing pre-load, the tightening procedure must be adhered to.

SELF-LOCKING NUTS

Unless stated otherwise, self-locking nuts once removed must be discarded and new nuts of the same type and strength grade installed.

AIR SUSPENSION

Always make sure that suitable eye protection is worn when working on the air suspension system.

BALL AND ROLLER BEARINGS

When removing and installing bearings, make sure that the following practices are observed to make sure component serviceability:

CAUTION:

Service tools have been developed for removing the majority of bearings; these must always be used where specified.

- Remove all traces from bearing under inspection by cleaning with a suitable degreasant; maintain absolute cleanliness throughout operations.
- Conduct a visual inspection for markings on rolling elements, raceways, outer surfaces of outer or inner surfaces of inner rings. Reject any bearings found to be marked since marking in these areas indicates onset of wear.
- Hold inner race of bearing between finger and thumb of one hand and rotate outer race to check that it revolves absolutely smoothly. Repeat holding outer race and rotating inner race. DO NOT spin the bearing.
- Rotate outer ring gently using a reciprocating movement whilst holding inner ring; feel for any check or obstruction to rotation. Reject bearing if movement is not absolutely smooth.
- Check bearing for blueing or signs of overheating.
- Lubricate bearing with the specified lubricant.
- Inspect bearing surface of shaft and bearing housing for discoloration or other markings which indicate overheating of bearing or movement between bearing and seating.
- Before installing bearing, make sure that shaft and bearing housing are clean and free from burrs.
- If one bearing of a pair shows signs of wear, overheating etc., it is advisable to replace bearings as a pair unless it is suspected that one bearing may have been faulty when installed, was installed incorrectly or the fault arose due to oil seal failure.
- Never reinstall a bearing unless it is in a fully serviceable condition.

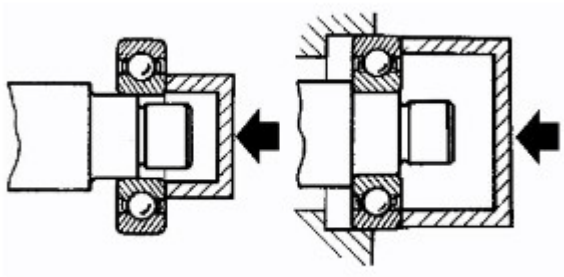

E48560

- When installing a bearing to a shaft, only apply force to the inner ring of the bearing. When installing a bearing into a housing, only apply force to the outer ring of the bearing.

CAUTION:

Service tools have been developed for installing the majority of bearings; these must always be used where specified.

- In the case of grease lubricated bearings, fill the space between the bearing and outer seal with the recommended grade of grease before installing the seal.

CAUTION:

When a waxed oil seal (installed dry) type of oil seal is to be installed, take great care that grease does not contaminate the running surface of the seal.

- Always make suitable reference marks between the components of separable bearings e.g. taper roller bearings when disassembling to make sure correct location of components when assembling. Never install new rollers in an outer ring, always install a new bearing assembly.

BRAKE PADS AND LININGS

Always install the correct grade and specification of brake pads and linings. When replacing these items, always replace as complete axle sets.

BRAKE HYDRAULICS

Always observe the following recommendations when working on the braking system:

⚠ WARNING:

Do not mix brake fluid of different specifications.

- Always use two spanners when loosening or tightening brake pipes or hose connections.
- Make sure that hoses run in a natural curve and are not kinked or twisted.

- Install brake pipes and hoses securely in their retaining clips and make sure that they cannot contact a potential chafing point.
- Containers used for brake fluid must be kept absolutely clean.
- Do not store brake fluid in unsealed containers, the fluid will absorb water which will lower the boiling point of the fluid.
- Do not allow brake fluid to be contaminated with other fluids such as mineral oil and do not put brake fluid in a container which has previously been used for storing other fluids.
- Do not re-use brake fluid which has been bled from the system.
- Always use brake fluid or a suitable brake cleaning fluid to clean hydraulic components.
- Unless stated otherwise, use only clean brake fluid to lubricate hydraulic seals and components.
- Always install blanking plugs to hoses, pipes or components immediately after disconnection.
- Check thread compatibility of original equipment with replacement components.
- Observe absolute cleanliness when working with hydraulic components.

PIPES AND HOSES

When removing or installing flexible hydraulic pipes and hoses, make sure that the following procedures are observed to make sure component serviceability:

- Prior to removal, clean area around hose or pipe end which is to be disconnected.

- Obtain appropriate blanking plugs or caps before disconnecting hose or pipe end fittings in order that connections can be plugged immediately following disconnection.
- Always install blanking plugs or caps to pipes and unions immediately following disconnection.
- Clean hose or pipe and blow through with an air line.

⚠ WARNING:

Suitable eye protection must be worn.

- Check hoses externally for cracks, separation of plies, security of end fittings and external damage; replace faulty hoses.
- Check pipes for signs of corrosion and chafing, replace as necessary.

⚠ CAUTION:

If pipes are found to be chafed, rectify clips, mounting points etc., to prevent further problems in service.

- When installing hoses, make sure that no unnecessary bends are introduced and that hoses are not kinked, twisted or positioned close to potential chafing points.
- When installing pipes, make sure that pipes are positioned and clipped clear of potential chafing points.
- Always replace sealing washers installed to banjo bolts, sealing plugs etc.

- Always use a backing spanner when tightening unions and do not over tighten union nuts or banjo bolts.
- After engagement of 'quick-fit' connection hoses, perform a 'tug' test to make sure connection is secure.
- After any work on hydraulic systems, always check for fluid leaks whilst a second operator applies working pressure to the brake pedal or operates the system that has been worked on.

Fuel system hoses

Some fuel hoses are made up of two laminations, an armoured rubber outer sleeve and an inner viton core. Whenever a hose is removed, make sure that the inner bore is inspected to check that the viton lining has not become separated from the outer sleeve.

⚠ WARNING:

Never attempt to repair fuel hoses or rectify leaking 'quick-fit' connectors. The fuel hose and connectors must be replaced as an assembly.

Fuel system hose clips

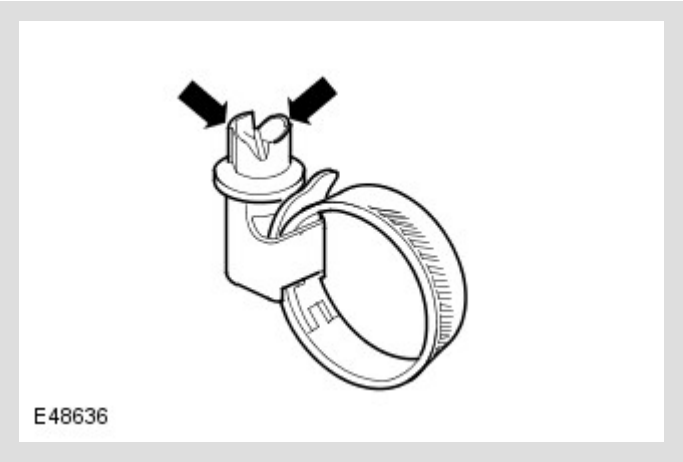

Certain fuel system hose clips are of the 'break-off head' type where a slot in the screw head shears off when the clip is tightened to a specific torque. These clips may be removed using a screwdriver and must be replaced with new clips on reassembly. Clips must be tightened until the portion of the slot shears off. Do not attempt to tighten clips by any other method, do not install any other type of clip.

'Quick-fit' connections are also installed to certain fuel hoses. After engagement of 'quick-fit' connections, perform a 'tug' test to make sure connection is secure.

Other fuel system hose clips are of the 'Jubilee' type and there may be a tamper proof cover installed over the screw head. This cover must be carefully removed before slackening the clip and should be replaced after final tightening, ensuring that the internal hexagon on the cover is correctly located on the clip screw.

Cooling system hoses

CAUTION:

The following precautions must be observed to make sure that the integrity of the cooling system hoses and their connection to the system is maintained.

Hose orientation and connection

Correct orientation of cooling system hoses is important to make sure that hoses do not become fatigued or damaged through contact with adjacent components.

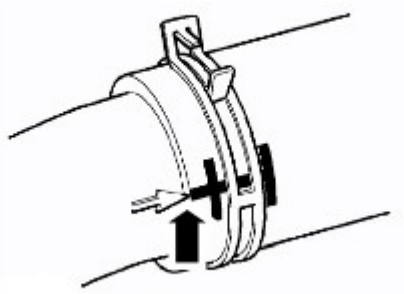
E48633

Where orientation marks are provided on the hose and corresponding component, the marks must be aligned when the hose is installed. Hoses must be installed fully on to their connection points, usually a moulded form on a pipe provides a positive indicator.

Hose clips

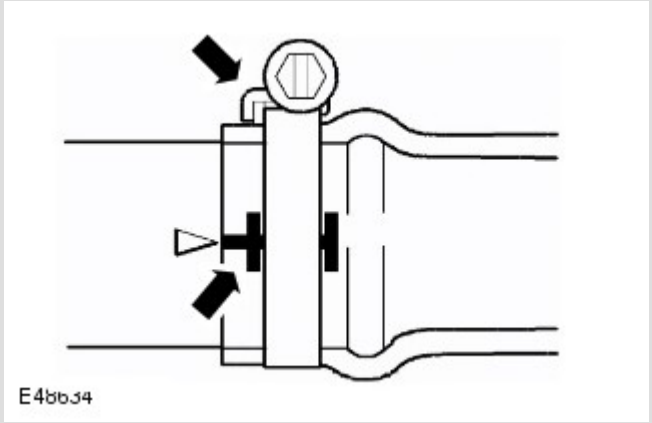

Markings are usually provided on the hose to indicate the correct clip position. If no markings are provided, position the clip directly behind the retaining lip at the end of the stub pipe. Worm drive clips should be orientated with the crimped side of the drive housing facing towards the end of the hose or the hose may become pinched between the clip and the stub pipe retaining lip. Unless otherwise stated, worm drive clips should be tightened to 3 Nm (2 lb-ft). Make sure that hose clips do not foul adjacent components.



Oetiker clips may be removed by bending the tag (arrowed) and releasing the free end of the clip. Clips must not be re-used. When installing new clips, make sure clip is positioned on hose before tightening and make sure that when clip is tightened, the tag is located in the longitudinal slot in the free end of the clip (arrowed in illustration).

'Quick-fit' connections are also installed to certain hoses/pipes. Inspect 'quick-fit' connections for damage, prior to connection. Replace if damaged. After engagement of 'quick-fit' connections, perform a 'tug' test to make sure connection is secure.

Heat protection

Always make sure that heat shields and protective sheathing are in good condition; replace if damage is evident. Particular care must be taken when routing hoses close to hot engine components such as the exhaust manifolds and exhaust gas recirculation (EGR) pipes. Hoses will relax and deflect slightly when hot, make sure this movement is taken into account when routing and securing hoses.

ELECTRICAL PRECAUTIONS

GENERAL

The following guidelines are intended to make sure the safety of the operator whilst preventing damage to the electrical and electronic components of this vehicle.

EQUIPMENT

Prior to commencing any test procedure on the vehicle, make sure that the relevant test equipment is working correctly and that any harness or connectors are in good condition. It is particularly important to check the condition of all plugs and leads of mains operated equipment.

POLARITY

Never reverse connect the vehicle battery and always make sure the correct polarity when connecting test equipment.

HIGH VOLTAGE CIRCUITS

Whenever disconnecting live ht circuits, always use insulated pliers and never allow the open end of the ht lead to contact other components, particularly ECU's.

VEHICLES INSTALLED WITH NAVIGATION

CAUTION:

The following precaution must be observed as failure to comply may result in damage to the navigation system computer hardware.

A minimum period of two minutes must have elapsed from the ignition being switched to the 'OFF' position prior to disconnection of the battery.

VEHICLES WITH BI-XENON HEADLAMP BULBS INSTALLED

WARNING:

The following precautions must be observed as failure to comply may result in exposure to ultra-violet rays, severe electric shock, burns or risk of an explosion.

- Safety goggles and gloves must be worn.
- Make sure that headlamps are switched off before removing bulbs.
- Do not touch the glass portion of the bulb.
- On no account should headlamps be switched on with the bulb removed from the headlamp.
- Bulb testing may only be carried out with the bulb installed in the headlamp.
- Bulbs must be disposed of in accordance with the local authority bye-laws.

CONNECTORS AND HARNESSES

The engine compartment of a vehicle is a particularly hostile environment for electrical components and connectors. Always observe the following:

- Make sure electrically related items are dry and oil free before disconnecting/connecting test equipment.
- Make sure that disconnected electrical connectors and sensors are protected from any possible oil, coolant or other liquid contamination. Any such contamination could impair performance or lead to component failure.
- Never force connectors apart or pull on the wiring harness.
- Always make sure locking tabs are disengaged before disconnecting electrical connectors etc. and make sure that correct orientation is achieved before connection.
- Make sure that any protection covers, insulation etc. are replaced if disturbed.

Having confirmed that a component is faulty, carry out the following:

- Switch off the ignition and disconnect the battery.
- Remove the component and support the disconnected harness.
- When replacing electrical components, keep oily hands away from electrical connections and make sure that locking tabs on connectors are fully engaged.

BATTERY DISCONNECTION/CONNECTION

Always refer to the Electrical Section of this manual - Battery Disconnect/Connect prior to attempting to connect or disconnect the battery.

For additional information, refer to: Specifications (414-00 Battery and Charging System - General Information, Specifications).

FUEL HANDLING PRECAUTIONS

The following information lists basic precautions which must be observed if fuel is to be handled safely. It also outlines other areas of risk which must not be ignored. As this information is issued for basic guidance only, consult your local Fire Department where any doubt as to personal and environmental safety exists - See also Health and Safety Precautions.

General precautions

Always have the correct type of fire extinguisher containing Foam, CO2, Gas or powder accessible when handling or draining fuel or dismantling fuel systems. Fire extinguishers must also be located in areas where fuel is stored.

Make sure that suitable warning signs are exhibited.

Keep all sources of ignition well away from areas where fuel is being handled.

Make sure that any lead lamps are flameproof and kept clear of spillage.

⚠ WARNINGS:

- Do not disassemble or reassemble fuel system components whilst vehicle is over a pit.

- No one should be permitted to repair components associated with fuel without first having specialist training.

Always disconnect the vehicle battery before carrying out disassembly, reassembly or draining work on a fuel system.

Fuel tank and system draining

Draining must be carried out in accordance with the procedures given in the relevant Fuel System section of this manual.

⚠ WARNINGS:

- Never drain fuel or work on a fuel system while the vehicle is over a pit. Extraction or draining of fuel must be carried out in a well ventilated area.
- Never switch on or operate mobile (cellular) phones in the vicinity of vehicles when operations are being carried out on the fuel system.
- Always attach fuel vapor warning labels to fuel tanks immediately after draining.
- Containers used for storing fuel must be clearly marked with the contents and placed in a safe storage area which meets the requirements of the local authority.

⚠ CAUTION:

Some fuel lines are now installed with 'quick release' connectors. If a connector is damaged, no attempt must be made to repair the connector, a new fuel line and connector(s) assembly must be installed.

Always release pipe clips fully before attempting to disconnect fuel pipes.

FUEL TANK REPAIRS

CAUTION:

No attempt should be made to repair a plastic fuel tank. If the structure of the tank is damaged, a new tank must be installed.

OIL SEALS

Never use a seal which has been improperly stored or handled.

- Take great care when removing old seals that the sealing surfaces and seal housing are not damaged.
- Carefully examine seal before installation to make sure that it is clean and undamaged.
- Make sure that the surface on which the seal is to run and also the seal housing is clean and free from burrs or scratches. Renew the component if the sealing surface cannot be restored.
- Special tools and protection sleeves are provided for installing the majority of seals and must be used when specified.

- Many seals are now coated with a protective wax and DO NOT need to be lubricated prior to installation. Always check the relevant repair procedure which will state if a seal must be installed dry. Never touch these seals with oily hands as the oil will contaminate the protective coating and affect the sealing properties of the seal; also, make sure that installation tools and protection sleeves are free from oil and grease. Seals which must be lubricated prior to installation should have the recommended lubricant applied to the areas specified in the repair procedure.
- Make sure that a seal is installed the correct way round. For example, the lip of the seal must face towards the lubricant which it is sealing.
- When installing an oil seal, make sure that it is positioned square to shaft and housing. Where the seal is to be installed to a housing prior to installing over a shaft, take care not to allow the weight of an unsupported shaft to rest on the seal.

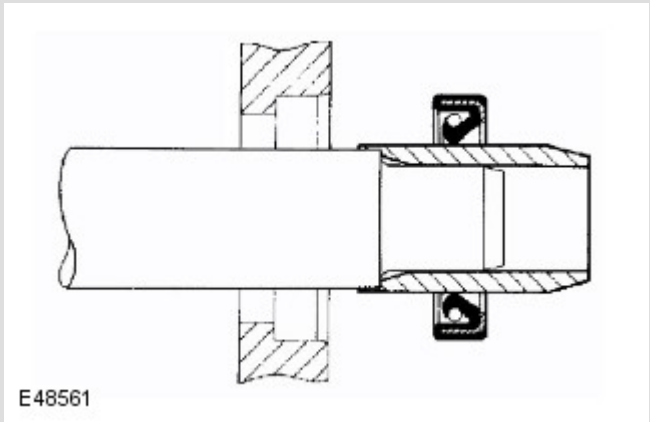

- Always use the recommended special tool and protection sleeve to install an oil seal. If no tool is specified, use a suitable mandrel approximately 0.4 mm (0.015 in) smaller than the outside diameter of the seal. Use adhesive tape on the shaft to protect the sealing lip of the seal.

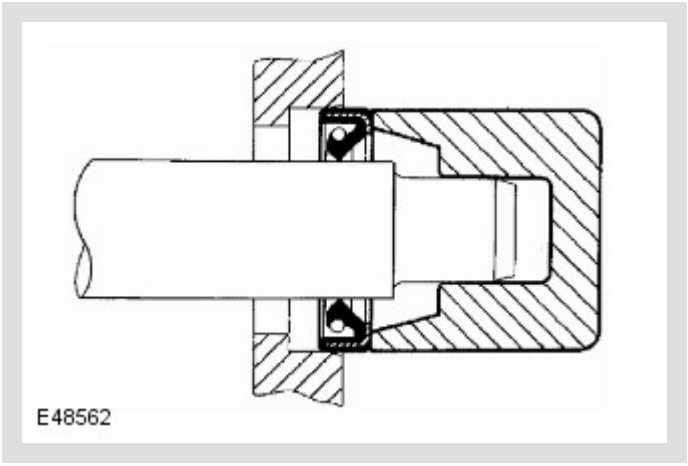

- Press or drift the seal in to the depth of its housing if the housing is shouldered or flush with the face of the housing where no shoulder is provided. Make sure that the seal is not tilted in the housing when it is installed.

SUPPLEMENTAL RESTRAINT SYSTEM (SRS) PRECAUTIONS

⚠ WARNING:

Do not install rear facing child seats in the front passenger seat.

The SRS contains components which are potentially hazardous to service personnel if not handled correctly. The following guidelines and precautions are intended to alert personnel to potential sources of danger and emphasise the importance of ensuring the integrity of the SRS components installed to the vehicle.

WARNING:

The following precautions MUST be adhered to when working on the SRS:

- **The correct procedures must always be used when working on SRS components.**
- **Persons working on the SRS must be fully trained and have been issued with the safety guidelines.**
- **The air bag modules contain extremely flammable and hazardous compounds. Contact with water, acids or heavy metals may produce harmful or explosive results. Do not dismantle, incinerate or bring into contact with electricity before the unit has been deployed.**
- **Always replace a safety belt assembly that has withstood the strain of a severe vehicle impact or if the webbing shows signs of fraying.**
- **Allow a period of 10 minutes to elapse after disconnecting the battery before undertaking any work on the SRS.**
- **Always disconnect the vehicle battery before carrying out any electric welding on a vehicle installed with SRS.**

CAUTION:

Do not expose air bag modules or safety belt pre-tensioners to temperatures exceeding 85° C (185° F).

It should be noted that these precautions are not restricted to operations performed when servicing the SRS. The same care should be exercised when working on ancillary systems and components located in the vicinity of SRS components; these include but are not limited to:

- Driver air bag, clockspring.
- Passenger air bag.
- Side Air Curtains - front and rear.
- Safety belt pre-tensioners.
- SRS harnesses, link leads and connectors.

Making the system safe

Before working on or in the vicinity of SRS components, make sure the system is rendered safe by performing the following operations:

- Remove the ignition key.
- Disconnect the battery, earth lead first.
- Wait 10 minutes for the SRS power circuit to discharge before commencing work.

NOTE:

The SRS uses energy reserve capacitors to keep the system active in the event of electrical supply failure under crash conditions. It is necessary to allow the capacitors sufficient time to discharge (10 minutes) in order to avoid the risk of accidental deployment.

Installation

In order to make sure system integrity, it is essential that the SRS system is regularly checked and maintained so that it is ready for effective operation in the event of a collision. Carefully inspect SRS components before installation. Do not install a part that shows signs of being dropped or improperly handled, such as dents, cracks or deformation.

⚠ WARNING:

The integrity of the SRS is critical for safety reasons. Make sure the following precautions are always adhered to:

- **Do not install accessories or other objects to trim panels which cover air bags.**
- **Never install used SRS components from another vehicle or attempt to repair an SRS component.**
- **When repairing an SRS system, only use genuine new parts.**
- **Never apply electrical power to an SRS component unless instructed to do so as part of an approved test procedure.**

- **Special fixings are necessary for installing an air bag module – do not use other fixings and make sure that all fixings are tightened to the correct torque.**
- **Always use new fixings when replacing an SRS component.**

CAUTIONS:

- Take care not to trap air bag modules when installing interior trim components.
- Make sure SRS components are not contaminated by oil or grease.

NOTES:

- Following safety belt pre-tensioner deployment, the safety belts can still be used as conventional safety belts but will need to be replaced as soon as possible to make sure full SRS protection.
- If the SRS components are to be replaced, the part number/bar code of the new unit must be recorded.

SRS component testing precautions

The SRS components are triggered using relatively low operating currents, always adhere to the following:

WARNING:

Never use a multimeter or other general purpose equipment on SRS components. Use only T4 to diagnose system faults.

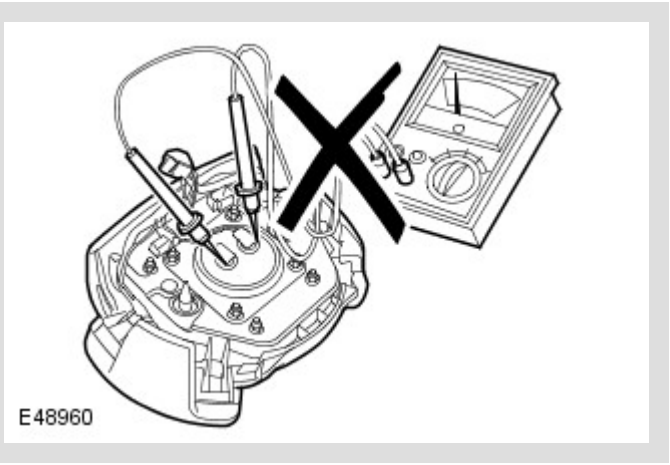

WARNING:

Do not use electrical test equipment on the SRS harness while it is connected to any of the SRS components, it may cause accidental deployment and injury.

Handling and storage

Always observe the following precautions when handling SRS components:

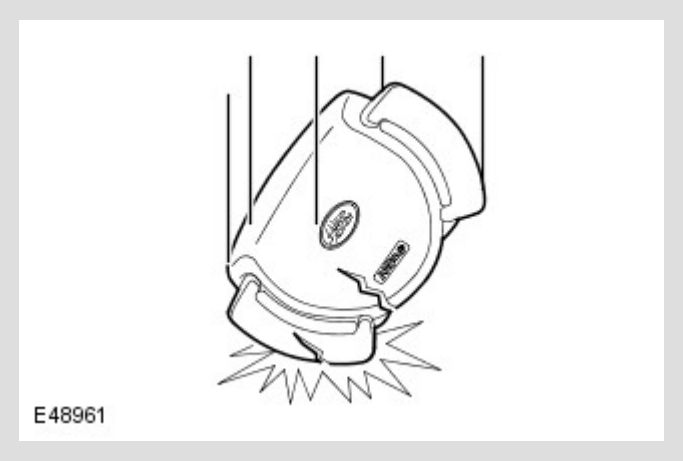

- Never drop an SRS component. The air bag diagnostic control unit is a particularly shock sensitive device and must be handled with extreme care. Air bag modules and safety belt pre-tensioners could deploy if subjected to a strong shock.
- Never wrap your arms around an air bag module. If a module has to be carried, hold it by the cover with the cover uppermost and the base away from your body.
- Never transport air bag modules or safety belt pre-tensioners in the passenger compartment of a vehicle. Always use the luggage compartment of the vehicle for carrying air bag modules and safety belt pre-tensioner units.
- Never attach anything to an air bag cover or any trim component covering an air bag module. Do not allow anything to rest on top of an air bag module.
- Always keep components cool, dry and free from contamination.

- Never apply grease or cleaning solvents to safety belt pre-tensioner units, component failure could result.
- Always store an air bag module with the deployment side uppermost. If it is stored deployment side down, accidental deployment will propel the air bag module with sufficient force to cause serious injury.
- Keep new air bag modules in their original packaging until just prior to installation. Place the old module in the empty packaging for carriage.

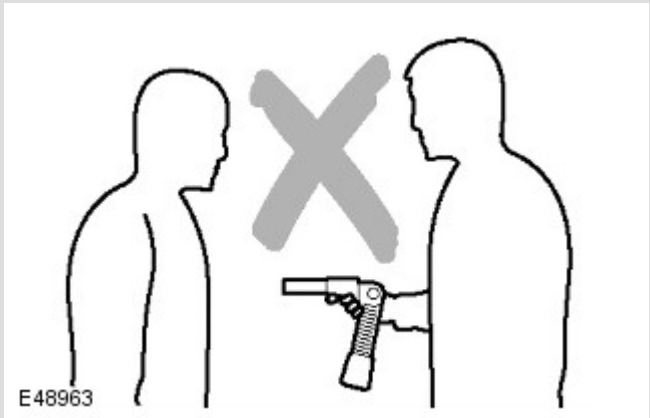

⚠ WARNINGS:

- When handling any SRS component, hold by the gas generator housing, DO NOT hold by the air bag. Do not wrap the thumb around the gas generator while holding. Do not drape air bag over shoulder or around neck. For safety belt buckle type pre-tensioners, hold by the piston tube, with the open end of the piston tube pointing towards the ground and the buckle facing away from your body. Do not cover the end of the piston tube. DO NOT hold buckle type pre-tensioners by the bracket assembly or cable. Never point the piston tube towards your body or other people.

- Air bag modules and safety belt pre-tensioners are classed as explosive devices. For overnight and longer term storage, they must be stored in a secure steel cabinet which has been approved as suitable for the purpose and has been registered with the local authority.
- Store air bag modules or safety belt pre-tensioners in a designated storage area. If there is no designated storage area available, store in the locked luggage compartment of the vehicle and inform the workshop supervisor.

CAUTION:

Improper handling or storage can internally damage the air bag module making it inoperative. If you suspect the air bag module has been damaged, install a new module and refer to the deployment /disposal procedures for disposal of the damaged module.

SRS harness and connectors

Always observe the following precautions with regards to SRS system electrical wiring:

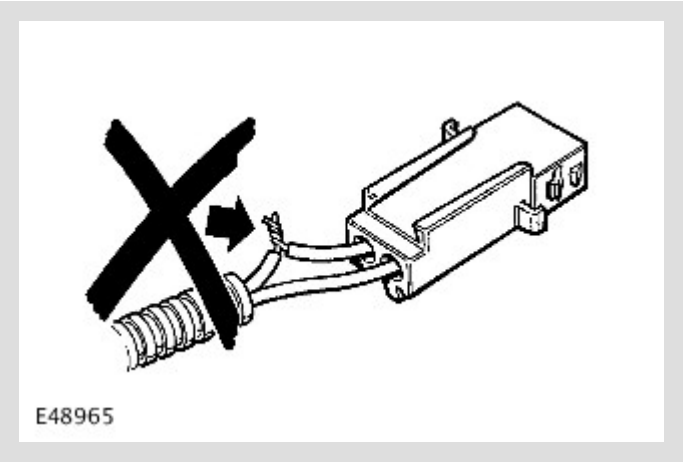

- Never attempt to modify, splice or repair SRS wiring.
- Never install electrical equipment such as a mobile telephone, two-way radio or in-car entertainment system in such a way that it could generate electrical interference in the air bag harness. Seek specialist advice when installing such equipment.

NOTE:

SRS wiring can be identified by a special yellow outer sleeve protecting the wires (black with yellow stripe protective coverings are sometimes used).

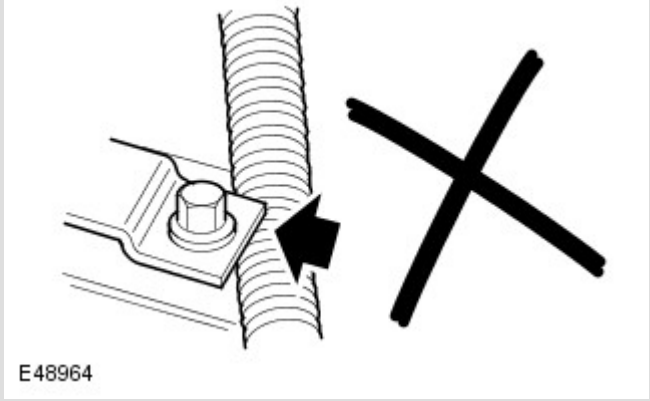

WARNING:

Always make sure SRS wiring is routed correctly. Be careful to avoid trapping or pinching the SRS wiring.

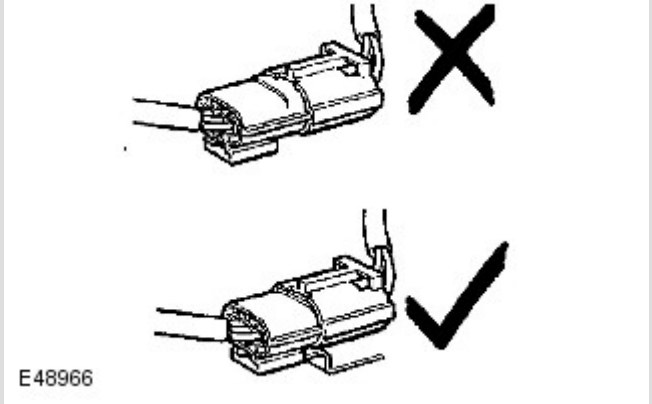

WARNING:

Do not leave the connectors hanging loose or allow SRS components to hang from their harnesses. Look for possible chafing points.

Impact sensors - inspection

After any degree of side or frontal body damage, inspect the impact sensors. Replace a sensor if there is any sign of damage.

CAUTION:

Take extra care when painting or carrying out bodywork repairs in the vicinity of the impact sensors. Avoid direct exposure of the impact sensors or link harnesses to heat guns, welding or spraying equipment. Take care not to damage sensor or harness when reinstalling components.

Clockspring

CAUTION:

Always follow the procedure for installing and checking the clockspring as instructed in the SRS repairs section. Comply with all safety and installation procedures to make sure the system functions correctly. Observe the following precautions:

- Do not unlock and rotate the clockspring when it is removed from the vehicle.
- Do not turn the road wheels when the clockspring is removed from the vehicle.
- Always make sure the clockspring is removed and installed in its central position and with the front road wheels in the straight ahead position - refer to SRS repair section for the correct removal and installation procedure.

- If a new clockspring is being installed, make sure the locking tab holding the spring's rotational position is not broken; units with a broken locking tab must not be used.

AIR BAG AND PRE-TENSIONER DEPLOYMENT

⚠ WARNING:

During deployment parts of the air bag module become hot enough to burn you. Wait 30 minutes after deployment before touching the air bag module.

Deployment procedures and precautions as detailed in this manual should be strictly adhered to. Only personnel who have undergone the appropriate training should undertake deployment of air bag and pre-tensioner modules. The following precautions must be complied with:

- Only use deployment equipment approved for the intended purpose.
- Deployment of air bag/pre-tensioner modules must be performed in a well ventilated area which has been designated for the purpose.
- Make sure air bag/pre-tensioner modules are not damaged or ruptured before attempting to deploy.
- Where local legislation exists, notify the relevant authorities of intention to deploy air bag and pretensioner units.
- When deploying air bag pre-tensioner units, make sure that all personnel are at least 15 metres (45 feet) away from the deployment zone.

- Make sure deployment tool is connected correctly, in compliance with the instructions detailed in the SRS section of this manual. In particular, make sure deployment tool is NOT connected to battery supply before connecting to air bag module connector.
- When deploying safety belt pre-tensioners, make sure pre-tensioner unit is secured correctly to the seat.
- When removing deployed air bag modules and pre-tensioner units, wear protective clothing. Use gloves and seal deployed units in a plastic bag.
- Following deployment of any component of the SRS system within the vehicle, all SRS components must be replaced. DO NOT re-use or salvage any parts of the SRS system.
- Do not lean over an air bag module when connecting deployment equipment.

If a vehicle is to be scrapped, undeployed air bag modules and pre-tensioner units must be manually deployed. In this case air bags can be deployed in the vehicle. Before deployment, make sure the air bag module is secure within its correct mounting position. Deployment of the driver air bag in the vehicle may damage the steering wheel; if the vehicle is not being scrapped, deploy the module outside of the vehicle.

SRS COMPONENT REPLACEMENT POLICY

CAUTIONS:

- The Restraints Control Module (RCM) will log a crash fault after every impact which is severe enough to cause air bag deployment. **It is possible to have three crashes/impacts logged after one event where, for example, a front, side and rollover has occurred. After the third fault is logged, the SRS warning lamp will be illuminated and the restraints control module (RCM) must be replaced.**

- The SRS side/front impact sensor(s) must be replaced if there are any signs of physical damage or if the restraints control module (RCM) is registering a fault.

The following information details the policy for replacement of SRS components as a result of a vehicle accident.

Impacts which do not deploy the air bags or pre-tensioners

Check for structural damage in the area of the impact paying particular attention to bumper armatures, longitudinals and bracketry.

Impacts which deploy the air bags or pre-tensioners

The replacement and inspection policy is dependent on the type and severity of the crash condition. The following guidelines are the minimum that should be exercised as a result of the deployment of specific SRS components.

Check for structural damage in the area of impact paying particular attention to bumper armatures, longitudinals and bracketry.

FRONT AIR BAG DEPLOYMENT - DRIVER AND PASSENGER

CAUTION:

If the front air bags are deployed, the following components must be replaced:

- Driver air bag module
- Passenger air bag module
- Fly leads (where applicable) connecting front air bag modules to SRS harness
- Front safety belt buckle pre-tensioner
- Rear safety belt pre-tensioners - if installed
- Driver safety belt retractor - if installed
- Clockspring
- Any front impact sensors that have been physically damaged or if a fault is being registered
- Restraints Control Module (RCM) if the three crashes/impacts have been stored

Additionally, the following items must be inspected for damage and replaced as necessary:

- Front passenger safety belt retractor and webbing, tongue latching function, 'D' loop and body anchorage point
- Rear safety belt buckles, webbing, buckle covers, body anchorage points and tongue latching function
- Instrument panel moulding adjacent to passenger air bag module
- Steering wheel
- Front seat frames and head restraints
- Steering column - if adjustment is lost or if there are signs of collapse

- Safety belt height adjusters
- Rear safety belts

Side Air Bags

CAUTION:

If the side air curtains are deployed, the following components must be replaced on the side of the vehicle on which the deployment occurred:

- Side air curtains
- Any side impact sensors that have been physically damaged or if a fault is being registered
- Restraints Control Module (RCM) if the three crashes/impacts have been stored

Additionally, the following items must be inspected for damage and replaced as necessary:

- Front safety belts, retractors and webbing, tongue latching function, 'D' loop and body anchorage points
- Rear safety belt buckles, webbing, buckle covers, tongue latching function, and body anchorage points
- Front seat frame and head restraints
- Door trim casing
- Safety belt height adjusters
- Rear safety belts

Side Air Curtain modules

CAUTION:

If the side air curtain modules are deployed, the following components must be replaced on the side of the vehicle on which the deployment occurred:

- Side air curtain modules
- Link lead between side air curtain gas generator and restraints control module (RCM) harness
- Side air curtain module retaining clips
- Internal trim finisher
- Front safety belt buckle pre-tensioners
- Any side impact sensors that have been physically damaged or if a fault is being registered
- Restraints Control Module (RCM) if the three crashes/impacts have been stored

Additionally, the following items must be inspected for damage and replaced as necessary:

- Headlining
- Component mounting brackets
- Front safety belts, retractors and webbing, tongue latching function, 'D' loop and body anchorage points
- Rear safety belt buckles, webbing, buckle covers, tongue latching function, and body anchorage points

- Adjacent trim components
- Safety belt height adjusters

Rear impacts

CAUTION:

If the safety belt pre-tensioners are deployed during a rear impact, the following components must be replaced:

- Safety belt pre-tensioners
- Front and rear safety belt retractors deployed during the impact
- Restraints Control Module (RCM) if the three crashes/impacts have been stored

Additionally, the following items must be inspected for damage and replaced as necessary:

- Safety belt height adjusters
- Front safety belts, retractors and webbing, tongue latching function, 'D' loop and body anchorage points
- Rear safety belt buckles, webbing, buckle covers, tongue latching function, and body anchorage points

AIR CONDITIONING (A/C) SYSTEM PRECAUTIONS

The A/C system contains fluids and components which could be potentially hazardous to the service engineer or the environment if not serviced and handled correctly. The following guidelines are intended to alert the service engineer to potential sources of danger and emphasise the importance of ensuring the integrity of the A/C operating conditions and components installed to the vehicle.

Where necessary, additional specific precautions are detailed in the relevant sections of this Manual and also in the Health and Safety Section. These precautions must be referred to prior to commencing repair operations.

The refrigerant used in the A/C system is HC-134a (Hydrofluorocarbon) R134a.

⚠ WARNINGS:

- Servicing must only be carried out by personnel familiar with both the vehicle system and the charging and testing equipment. All operations must be carried out in a well ventilated area away from open flame and heat sources.
- R134a is a hazardous liquid and when handled incorrectly can cause serious injury. Suitable protective clothing, consisting of face protection, heat proof gloves, rubber boots and rubber apron or waterproof overalls, must be worn when carrying out operations on the A/C system.

Remedial actions

⚠ WARNING:

Due to its low evaporating temperature, R134a must be handled with care. R134a splashed on any part of the body will cause immediate freezing of that area. Also, refrigerant cylinders and replenishment trolleys when discharging will freeze skin to them if contact is made.

If an accident involving R134a should occur, conduct the following remedial actions:

- If liquid R134a enters the eye, do not rub it. Gently run large quantities of eye wash over affected eye to raise the temperature. If an eye wash is not available, cool, clean water may be used to flush the eye. After rinsing, cover the eye with a clean pad and seek immediate medical attention.
- If liquid R134a is splashed onto the skin, run large quantities of water over the affected area to raise the temperature. Implement the same action if the skin comes in contact with discharging cylinders. Wrap the contaminated body parts in blankets (or similar materials) and seek immediate medical attention.
- If the debilitating effects of inhalation of R134a vapour are suspected, seek fresh air. If the affected person is unconscious, move them away from the contaminated area to fresh air and apply artificial respiration and /or oxygen and seek immediate medical attention.

Service precautions

Observe the following precautions when handling components used in the system:

- A/C units must not be lifted by their hoses, pipes or capillary lines.
- Hoses and lines must not be subjected to any twist or stress; the efficiency of the system will be impaired by kinks or restrictions. Make sure that hoses are correctly positioned before tightening couplings, and make sure that all clips and supports are utilised.

- Flexible hoses should not be positioned closer than 100 mm (4.0 in) to the exhaust manifold unless protected by heat shielding.
- Completed assemblies must be checked for refrigeration lines touching metal panels. Any direct contact of components and panels may transmit noise and so must be eliminated.
- The appropriate torque wrench must be used when tightening refrigerant connections to the stipulated value. An additional spanner must be used to hold the union to prevent twisting of the pipe when tightening connections.
- Before connecting any hose or pipe, make sure that refrigerant oil is applied to the seat of the new O-rings, **BUT NOT** to the threads of the connection.
- All protective plugs or caps must remain in place in the component until immediately prior to connection.
- Make sure components are at room temperature before uncapping/unplugging, to prevent condensation of moisture from the air that enters it.
- When disconnecting, immediately plug or cap all pipes to prevent ingress of dirt and moisture into the system.
- Components must not remain uncapped/unplugged, if a system has been left uncapped/unplugged for 24 hours or longer, a new receiver/drier must be installed.
- The receiver/drier contains desiccant which absorbs moisture. It must be positively sealed at all times. A receiver/drier that has been left uncapped for longer than 24 hours must not be used; install a new unit.
- The receiver/drier should be the last component connected to the system to make sure optimum dehydration and maximum moisture protection of the system.
- Use alcohol and a clean lint-free cloth to clean dirty connections.

- Make sure that all new parts installed are marked for use with R134a.
- When a major repair has been completed, a leak test should be conducted; refer to the Repairs Section of this manual for the correct procedure.

Refrigerant oil

CAUTION:

Refrigerant oil (ND-8 PAG) easily absorbs water and must not be stored for long periods. Do not pour unused refrigerant oil back into the container. Always use an approved refrigerant oil.

When replacing components in the system, drain the refrigerant oil from the component being replaced into a graduated container. On assembly, add the quantity of refrigerant oil drained to the new component - See Compressor Replacement in this Section.

A/C Compressor

A new compressor is sealed and pressurised with Nitrogen gas. When installing a new compressor, slowly release the sealing cap; gas pressure should be heard to vent as the seal is broken.

CAUTION:

A new compressor should always be sealed and should be pressurised with nitrogen gas. To avoid possible oil loss, release the sealing cap(s) slowly. Do not remove the cap(s) until immediately prior to connecting the pipes to the compressor.

Rapid refrigerant discharge

If the A/C system is damaged as a result of an accident and the system is punctured, the refrigerant will discharge rapidly. The rapid discharge of refrigerant will also result in the loss of most of the oil from the system. The compressor must be removed and all the remaining oil in the compressor drained and refilled as instructed in the air conditioning section of this manual.

Precautions for refrigerant recovery, recycling and recharging

When the A/C system is recharged, any existing refrigerant is first recovered from the system and recycled. The system is then charged with the required weight of refrigerant and volume of refrigerant oil.

⚠ WARNING:

Refrigerant must always be recycled before re-use to make sure that the purity of the refrigerant is high enough for safe use in the system. Recycling should always be carried out with equipment which is design certified by Underwriter Laboratory Inc. for compliance with SAE J1991. Other equipment may not recycle refrigerant to the required level of purity.

⚠ CAUTIONS:

- A R134a Refrigerant Recovery Recycling Recharging Station must not be used with any other type of refrigerant. Refrigerant R134a from domestic and commercial sources must not be used in motor vehicle systems.
- The system must be evacuated immediately before recharging commences. Delay between evacuation and recharging is not permitted.

A/C Compressor Replacement

A new compressor is supplied filled with a full charge (X cm^3) of refrigerant oil.

A calculated quantity of oil must be drained from the new compressor before installation. To calculate the quantity of oil to be drained:

- Remove the drain plug from the old compressor.
- Invert the compressor and gravity drain the oil into a calibrated measuring cylinder. Rotate the compressor clutch to make sure the compressor is completely drained.
- Note the quantity of oil drained (Y cm^3).
- Calculate the quantity of oil to be drained from the new compressor using the following formula: **X cm^3 — (Y cm^3 + 20 cm^3) = Q cm^3**
- Remove the drain plug from the new compressor and drain Q cm^3 of oil. Install and tighten the compressor drain plug.

Vehicle Weights

ITEM	KG	LB
* Maximum Gross Vehicle Weight (GVW)	3200	7055
Maximum front axle load	1530	3373
Maximum rear axle load	1850	4078
Approximate EEC kerb weights (full fuel tank):		
Petrol engine vehicles	2440-2570	5379-5666
Diesel engine vehicles	2435-2570	5368-5666
Maximum weight of unbraked trailer:		
On-road	750	1650
Off-road	750	1650
Maximum weight of trailer with overrun brakes:		
On-road	3500	7700
Off-road	1000	2205
Maximum roof rack load (Including the mass of the roof rack):		
On-road	100	220
Off-road	30	66

*** Weight quoted is the maximum weight possible for vehicles in this model range; weights may be less for certain variants depending upon trim level, territorial requirements etc.**

Vehicle Dimensions

ITEM	MM	IN
Length - including number plate plinth - All models	4950	194.8
Width - All models:		
Mirrors extended	2191	86.3
Mirrors folded	2009	79.1
Overall height - All models:		
Access height	1820	74.4
Motorway height	1840	72.4
Standard height	1863	73.3
Off-road height	1913	75.3
Wheelbase - All models	2880	113.4
Front overhang - All models	875	34.5
Rear overhang - Vehicles without towbar	1195	47
Rear overhang - Vehicles with towbar	1260	49.6
Front track	1629	64.0
Rear track	1626	64.0

Wading depth	500	19.7
Minimum ground clearance (off-road height)	281	11.06
Approach angle (at EEC kerb weight)	35°	35°
Breakover angle (at EEC kerb weight)	30°	30°
Departure angle - Towbar NOT installed (at EEC kerb weight)	29°	29°
Departure angle - Towbar installed (at EEC kerb weight) - Vehicle at Standard ride height	15.1°	15.1°
Departure angle - Towbar installed (at EEC kerb weight) - Vehicle at Off-road ride height	17.4°	17.4°

2012.0 RANGE ROVER (LM), 100-00

GENERAL INFORMATION

DESCRIPTION AND OPERATION

INTRODUCTION

This manual has been written in a format that is designed to meet the needs of technicians worldwide. The objective is to use common formats and include similar content in each manual.

This manual provides general descriptions for accomplishing diagnosis and testing, service and repair work with tested and effective techniques. Following them will help to ensure reliability.

IMPORTANT SAFETY INSTRUCTIONS

Appropriate service methods and correct repair procedures are essential for the safe, reliable operation of all motor vehicles as well as the personal safety of the individual carrying out the work.

Anyone who departs from the instructions provided in this manual must first establish that personal safety or vehicle integrity is not compromised by the choice of method, tools or components.

WARNINGS, CAUTIONS AND NOTES IN THIS MANUAL

WARNING:

Warnings are used to indicate that failure to follow a procedure correctly may result in personal injury.

CAUTION:

Cautions are used to indicate that failure to follow a procedure correctly may result in damage to the vehicle or equipment being used.

NOTE:

Notes are used to provide additional essential information required to carry out a complete and satisfactory repair.

Generic warnings or cautions are in their relevant description and operation procedure within section 100-00. If the generic warnings or cautions are required for a procedure, there will be a referral to the appropriate description and operation procedure.

If a warning, caution or note only applies to one step, it is placed at the beginning of the specific step.

TRUSTMARK AUTHORING STANDARDS (TAS) REMOVAL AND INSTALLATION PROCEDURES

NOTE:

TAS style procedures can be identified by steps that have no accompanying step text and the magenta color of the electrical connectors and fasteners such as nuts, bolts, clamps or clips.

A TAS removal and installation procedure uses a sequence of color illustrations to indicate the order to be followed when removing/disassembling or installing/assembling a component.

Many of the TAS procedures will have the installation information within the removal steps. These procedures will have the following note at the beginning of the procedure:

NOTE:

Removal steps in this procedure may contain installation details.

Items such as O-ring seals, gaskets, seals, self-locking nuts and bolts are to be discarded and new components installed unless otherwise stated within the procedure. Coated nuts or bolts are to be reused, unless damaged or otherwise stated within the procedure.

Specification procedures will contain all technical data that are not part of a repair procedure.

TAS Graphics

Colors used in the graphic are as follows:

- Blue - Indicates the target item, item to be removed/installed or disassembled/assembled
- Green and Brown - Indicates a secondary item that needs to be detached, removed/installed or disassembled /assembled prior to the target item
- Yellow - Component that is touched or affected in a way but remains in the vehicle. It may be detached, attached, moved, modified, checked, adjusted etc.
- Magenta - Indicates electrical connectors and fasteners such as nuts, bolts, clamps or clips
- Pale Blue - is for the special tool(s) and general equipment.

There may be multiple steps assigned to one illustration.

Numbered pointers are used to indicate the number of electrical connectors and fasteners such as nuts, bolts, clamps or clips.

Items in the illustration can be transparent or use cutouts to show hidden detail(s).

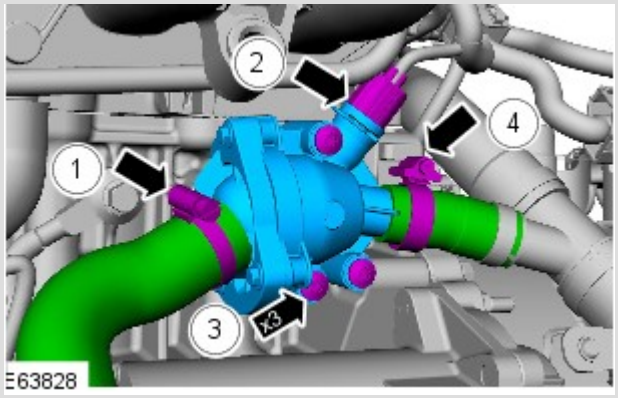
2
4
1
3
x3
E63828

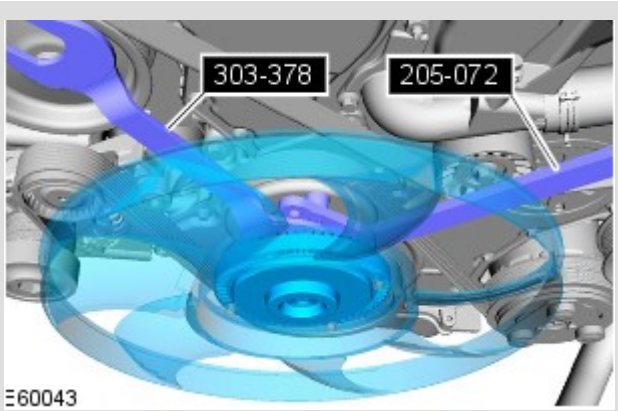
303-378
205-072
E60043

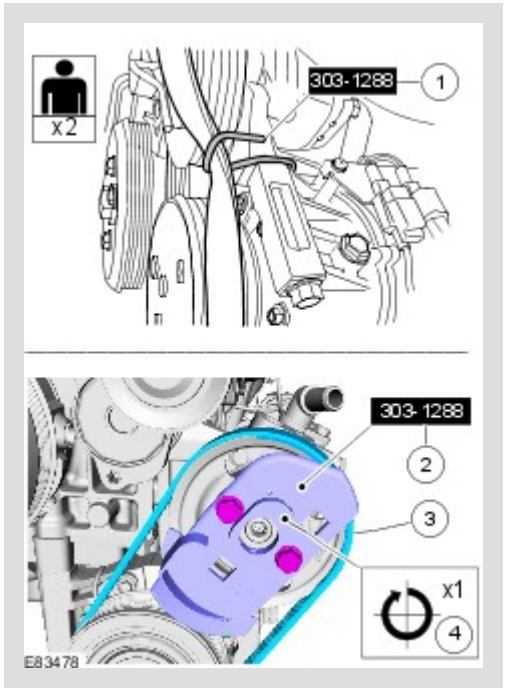

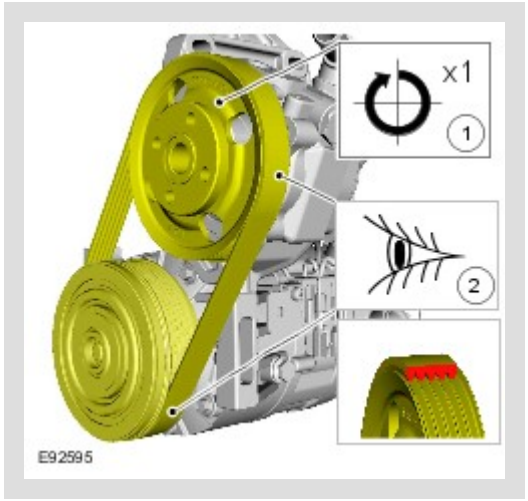

TAS Symbols

Symbols are used inside the graphics and in the text area to enhance the information display. The following paragraphs describe the various types and categories of symbols.

Prohibition symbols advise on prohibited actions to either avoid damage or health and safety related risks.

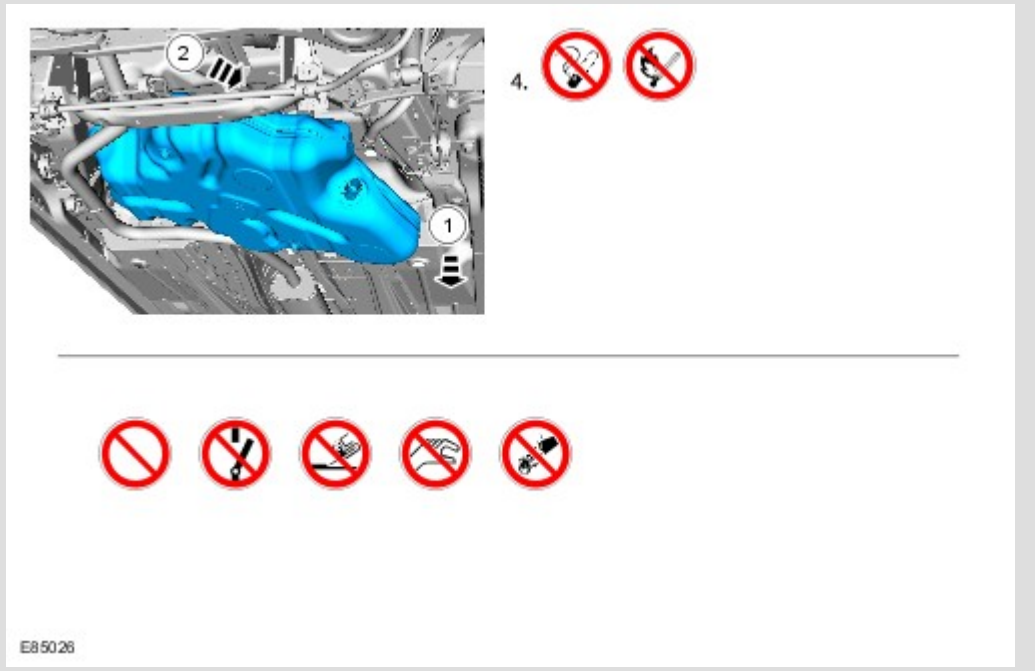

Health and Safety symbols recommend the use of particular protection equipment to avoid or at least reduce the risk or severity of possible injuries.

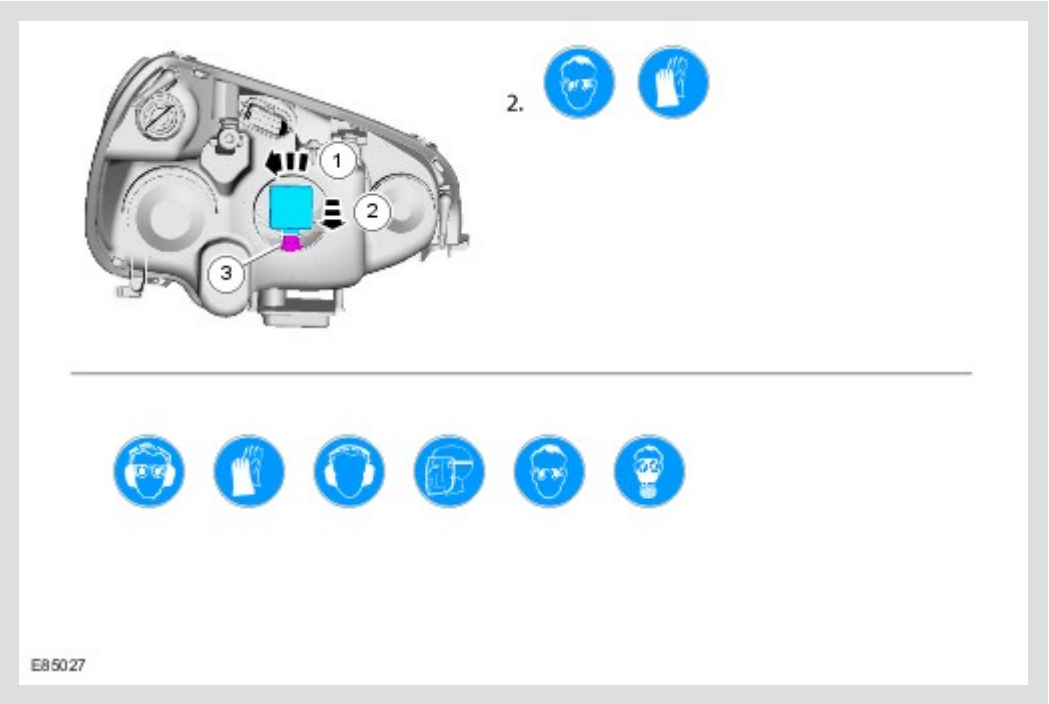

Warning symbols are used to indicate potential risks resulting from a certain component or area.

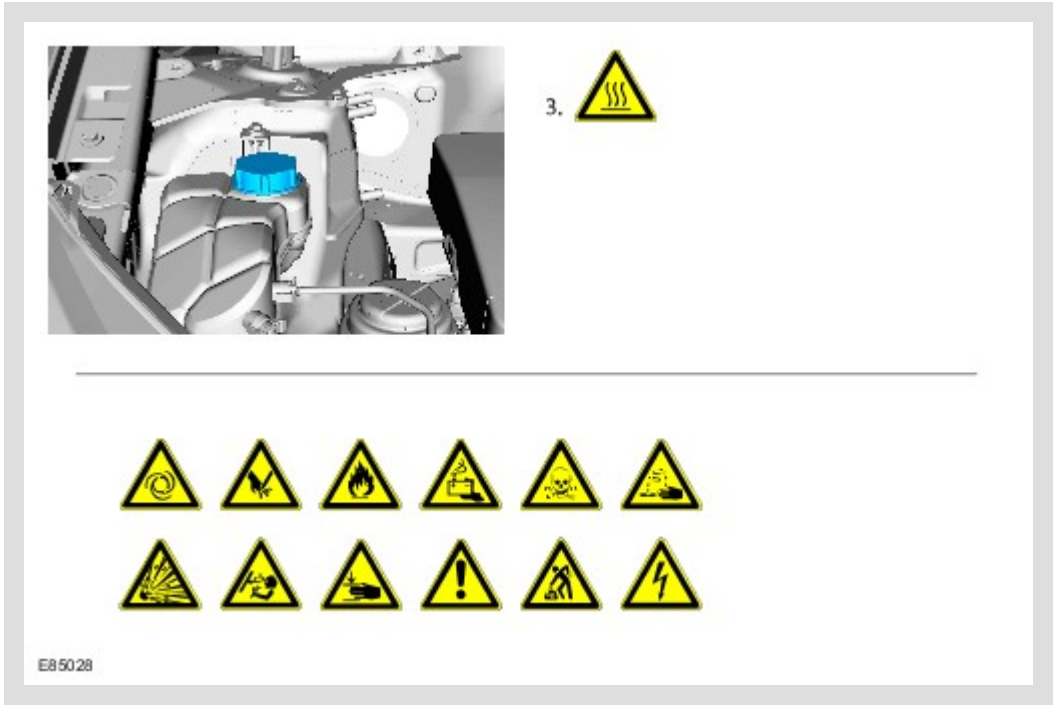

Instruction symbols are used to apply sealer, lubricant, weight, tape or cleaning detergent to a component.

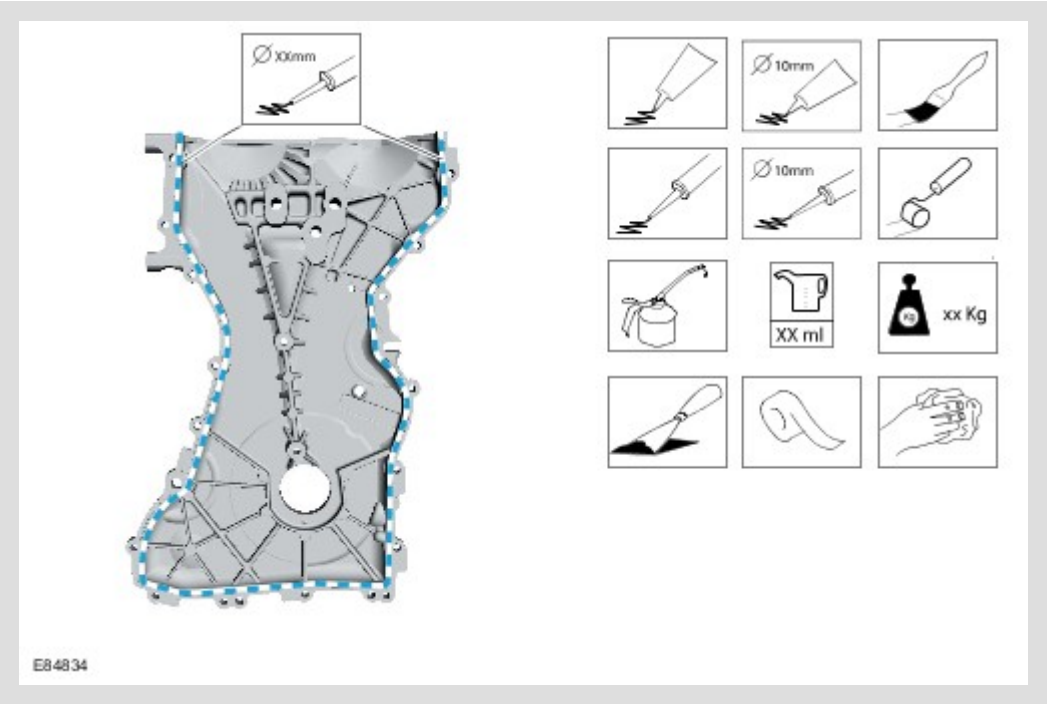

Location symbols are used to show the location of a component or system within the vehicle.

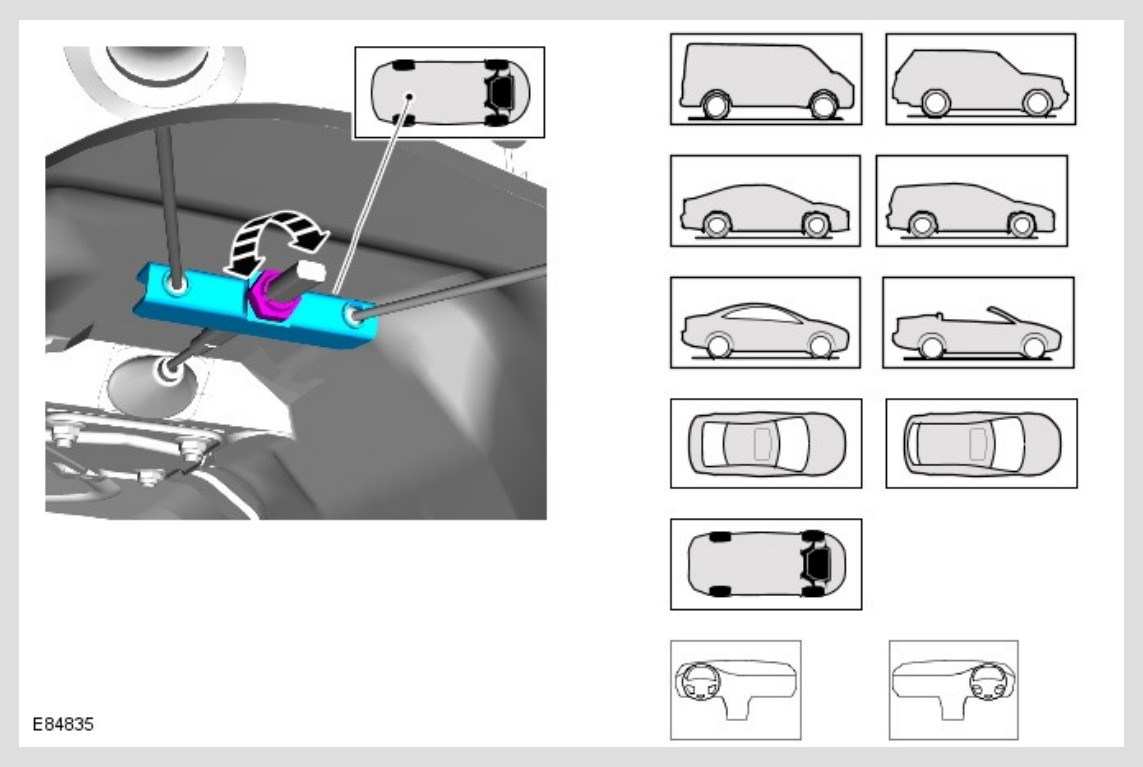

Gearshift lever or selector lever position symbols are used to show which gearshift lever or selector lever position is to be set.

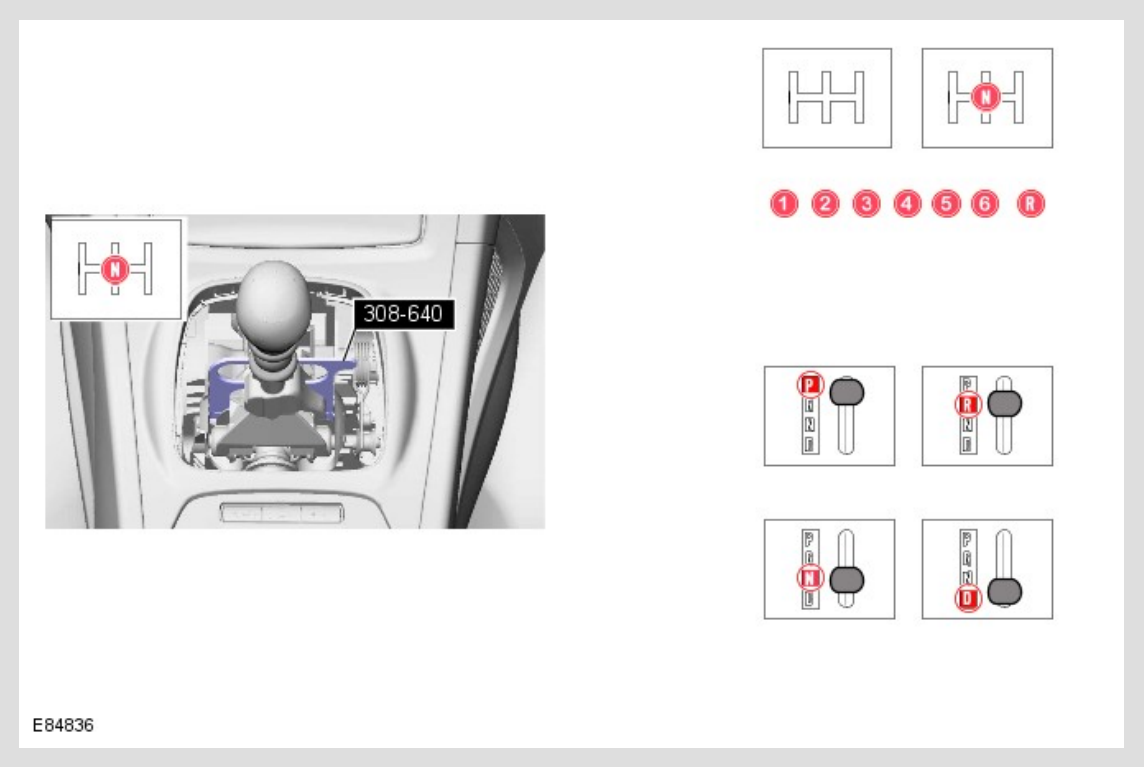

Pointer symbols are used to draw the attention to components and give special instructions such as a required sequence or number of components. The number of components is reflected by the value inside the luty arrow. A sequence number is located inside the circle. Numbers inside circles are also used to allocate special information such as tightening torques or chemicals to a particular component.

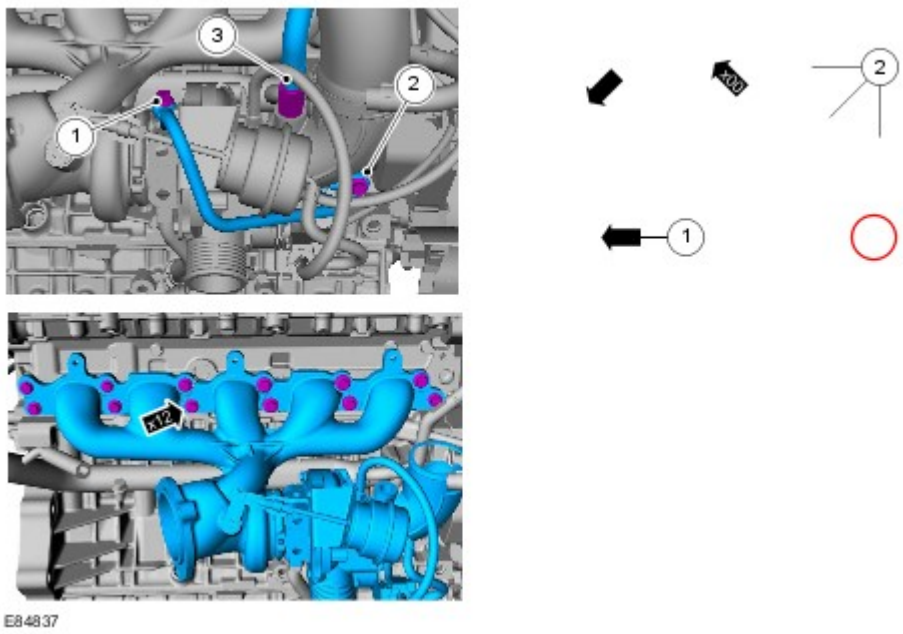

Movement arrows are used to show three dimensional or rotational movements. These movements can include specific values inside the symbol if required.

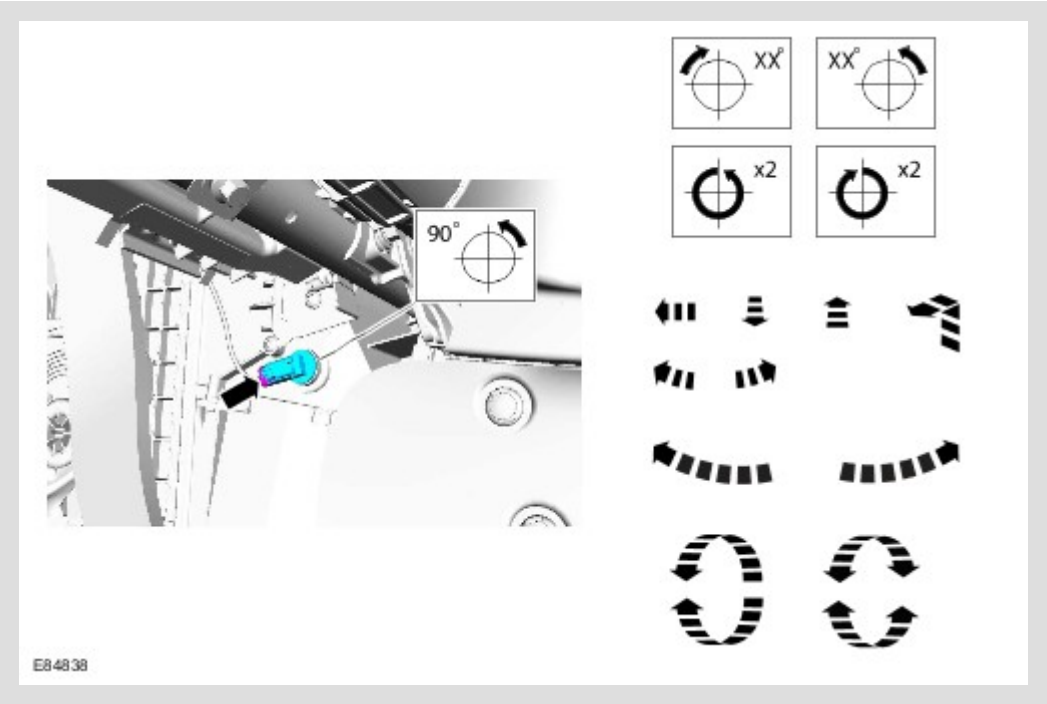

Standard tool symbols recommend the use of certain standard tools. These tools can include dimension values if required.

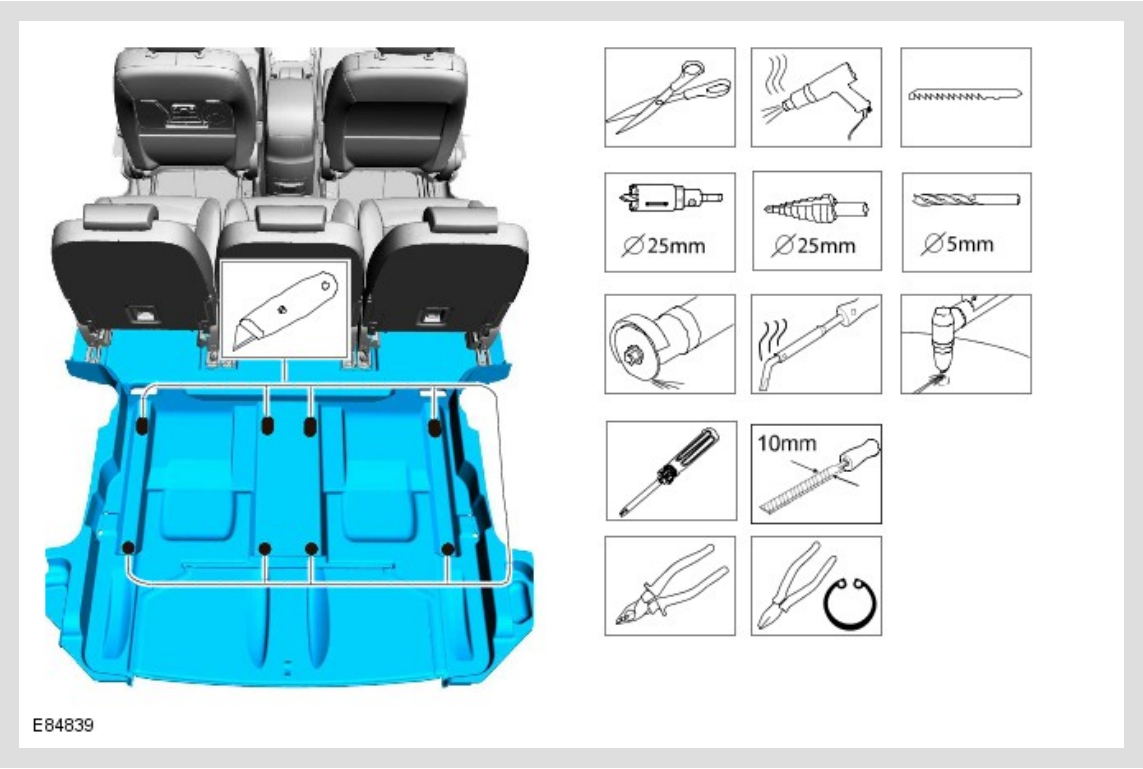

The following graphic illustrates a set of symbols that are used to provide detailed information on where to apply a material.

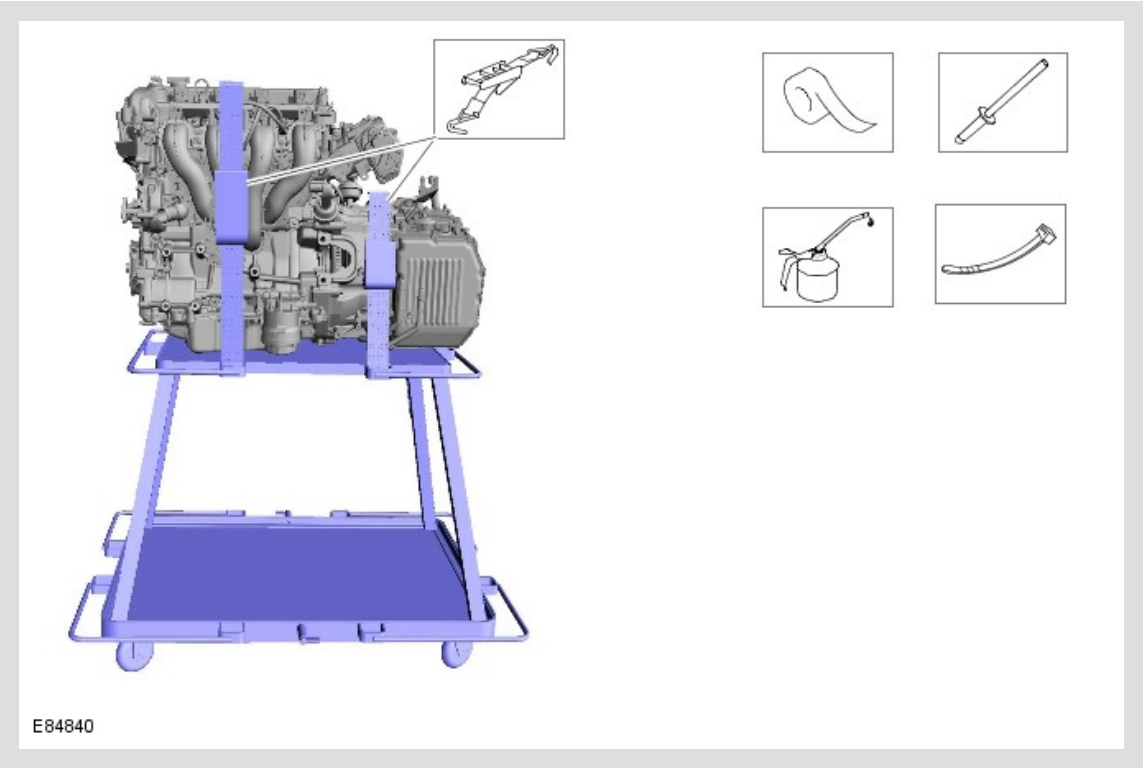

Measurement symbols provide detailed information on where to carry out a specific measurement. These symbols can include specific values if required.

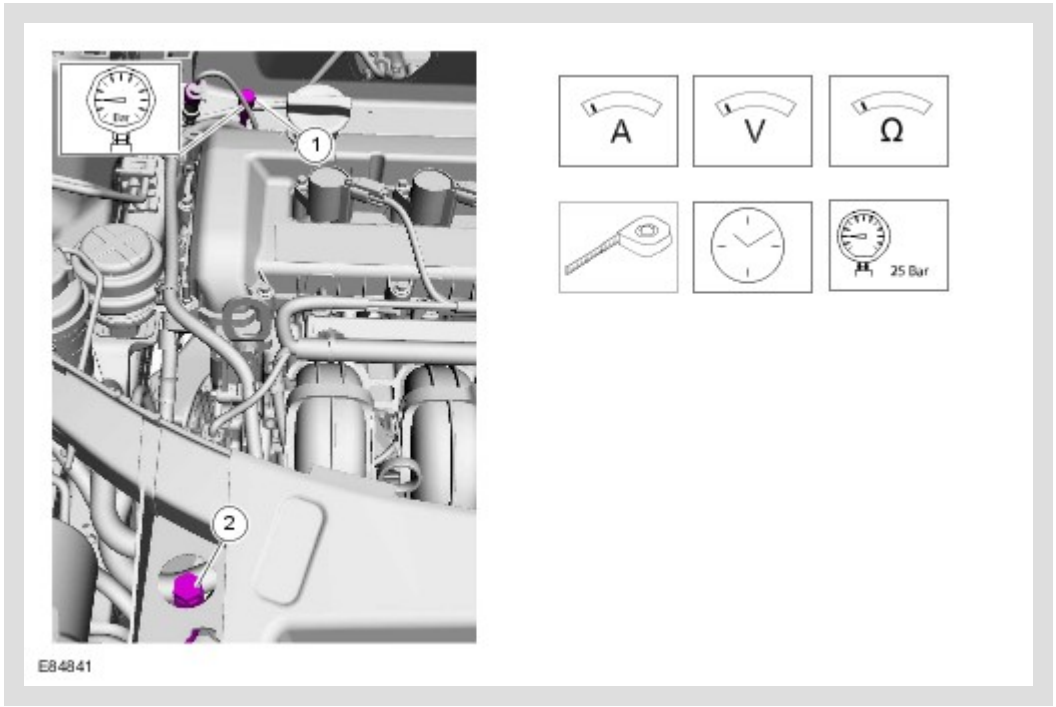

Special Tools and Torque Figure(s)

Special tools will be shown with the tool number in the illustration. The special tool number(s), general equipment, material(s) and torque figure(s) used for the procedure step will be shown in the text column.

IDENTIFICATION CODES

DESCRIPTION AND OPERATION

VIN Number

The VIN number will be found in three locations:

- **1.** Stamped on the front of the RH front suspension turret.
- **2.** At the bottom of the windshield glass on the LH side of the vehicle and visible from the outside.
- **3. UK, Europe and ROW - Not NAS/Canada -** On the VIN plate attached to the LH inner wing, forward of the suspension turret.
- **4. NAS/Canada -** On the Tire Data/Specification label attached to the front of the LH B-pillar.

RH Front Suspension Turret VIN

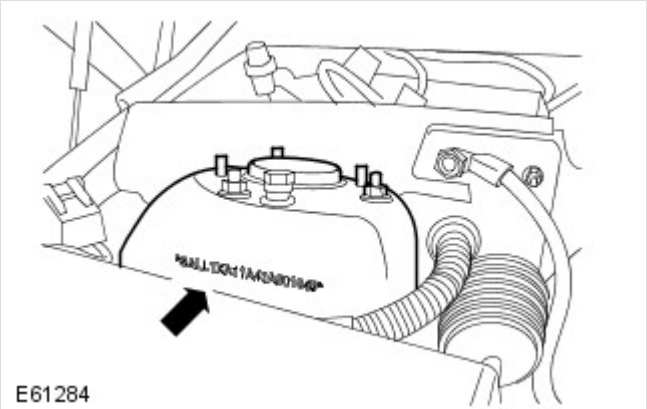

Windscreen VIN

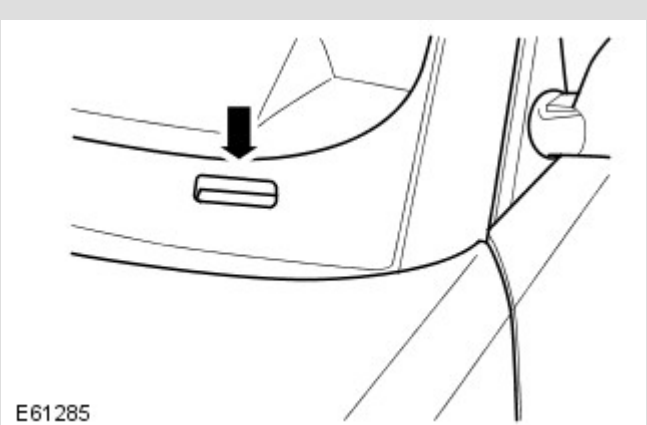

LH Inner Wing VIN

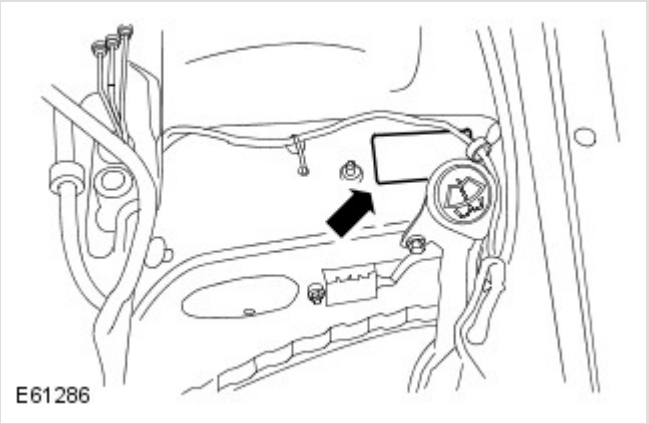

VIN number - UK, EU and ROW

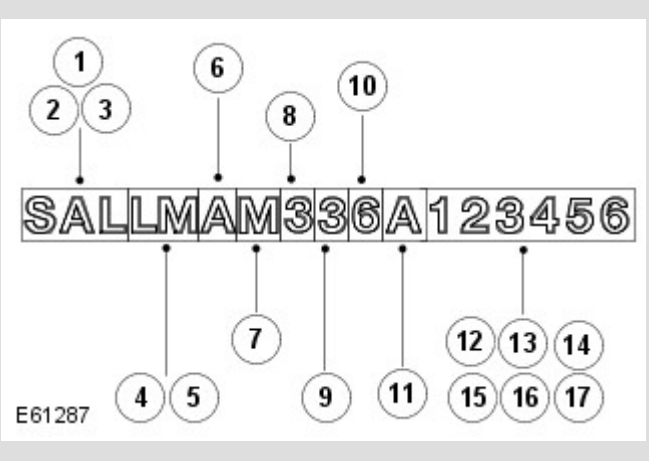

VIN POSITION	CHARACTER	IDENTIFIES
1 - 3 - World identifier	SAL	Land Rover (UK)
4,5 - Vehicle type	LM	Range Rover

6 - Class	A	Standard
7 - Body style	M	4 Door
7 - Body style	K	Armoured
8 - Engine	2	368DT - V8 3.6 Diesel
8 - Engine	H	448DT - V8 4.4 Diesel
8 - Engine	J	448DT - V8 4.4 Diesel with DPF
8 - Engine	D	508PN - AJ V8 5.0 NA Petrol
8 - Engine	E	508PS - AJ V8 5.0 SC Petrol
9 - Transmission and steering	3	RHD Automatic
9 - Transmission and steering	4	LHD Automatic
10 - Model year	B	2011
11 - Plant	A	Solihull
12 - 17 - Serial number	1 2 3 4 5 6	Unique six digit serial number

VIN number - NAS and Canada

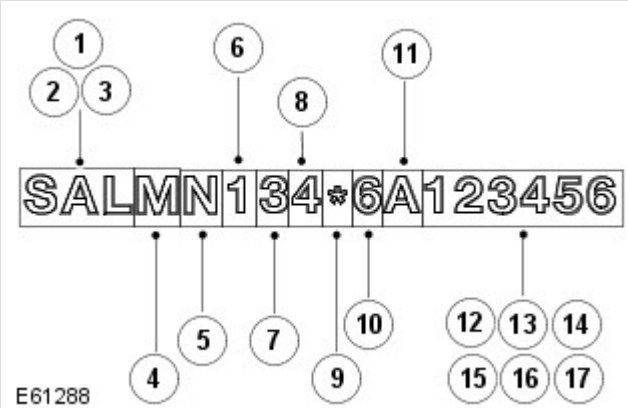

NOTE:

Active belts with driver and passenger frontal air bags and side inflatable restraint (1st and 2nd row) and driver knee air bag.

VIN POSITION	CHARACTER	IDENTIFIES
1 - 3 - World identifier	SAL	Land Rover (UK)
4 - Model range	M	Range Rover

5 - Class	E	#HSE (without luxury pack, with logic 7 and Bi-Xenon)
5 - Class	F	#HSE (with luxury pack, logic 7 and Bi-Xenon)
5 - Class	H	#Westminster
5 - Class	N	#China
5 - Class	P	#Autobiography
6 - Body style	1	4 Door Station Wagon
7 - Engine	2	368DT - V8 3.6 Diesel
7 - Engine	H	448DT - V8 4.4 Diesel
7 - Engine	D	508PN - V8 5.0 NA Petrol
7 - Engine	E	508PS - V8 5.0 SC Petrol
8 - Transmission and steering	4	LHD Automatic
9 - Check digit	*	Derived by calculation
10 - Model year	B	2011
11 - Plant	A	Solihull
12 -17 - Serial number	1 2 3 4 5 6	Unique six digit serial number

LH Inner Wing, Forward of Suspension Turret, VIN Plate - Not NAS/Canada

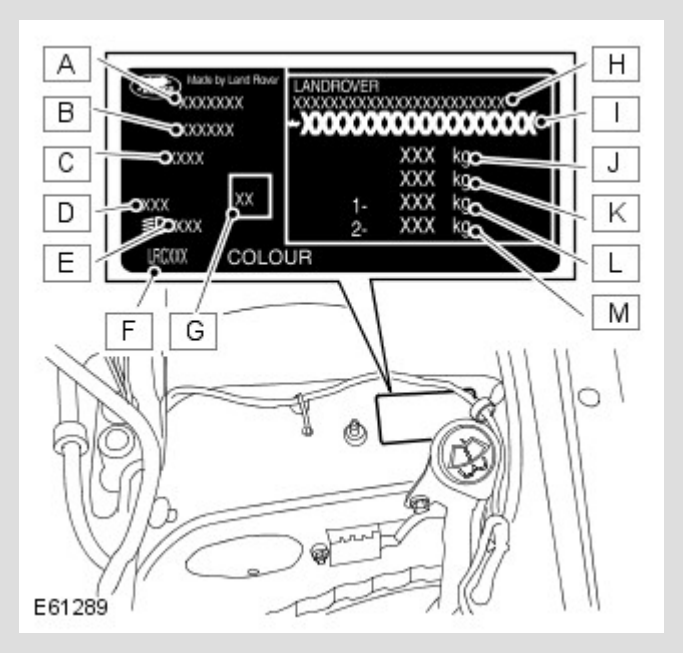

The VIN plate contains the following information:

- **A -** Reserved
- **B -** Engine Description
- **C -** Country
- **D -** Diesel Indicator
- **E -** Reserved

- **F -** Headlamp Code/initial aim value - If shown
- **G -** Colour code/group
- **H -** Type/Approval Number - If shown
- **I -** VIN Number
- **J -** Gross Vehicle Weight
- **K -** Gross Train Weight
- **L -** Front Axle Weight
- **M -** Rear Axle Weight

VIN/Certification/Tire Data Label - NAS only

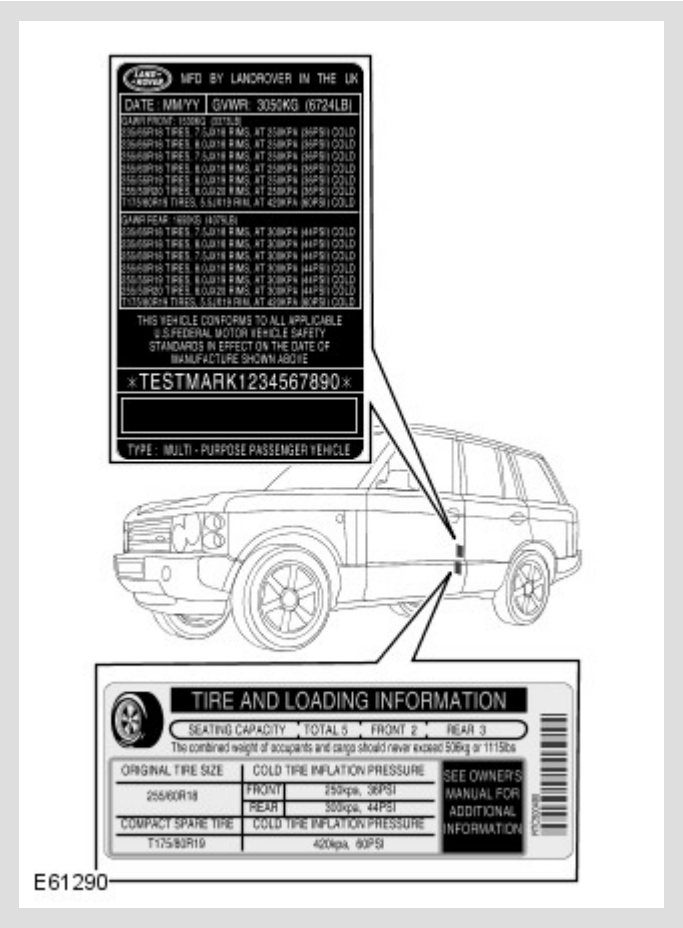

The Certification Label contains the following VIN information:

- **A -** VIN Number
- **B -** Bar code identification

VIN/Tire Pressure Specification Label - Canada only

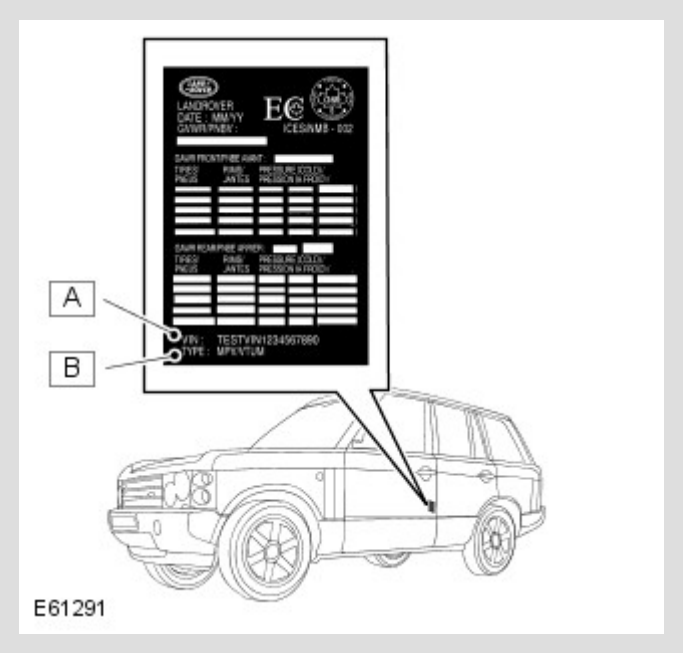

The Tire Pressure Certification Label contains the following VIN information:

- **A -** VIN Number
- **B -** Vehicle Type

Unit/Assembly Serial Number Locations

3.6 Litre V8 Diesel Engine Serial Number

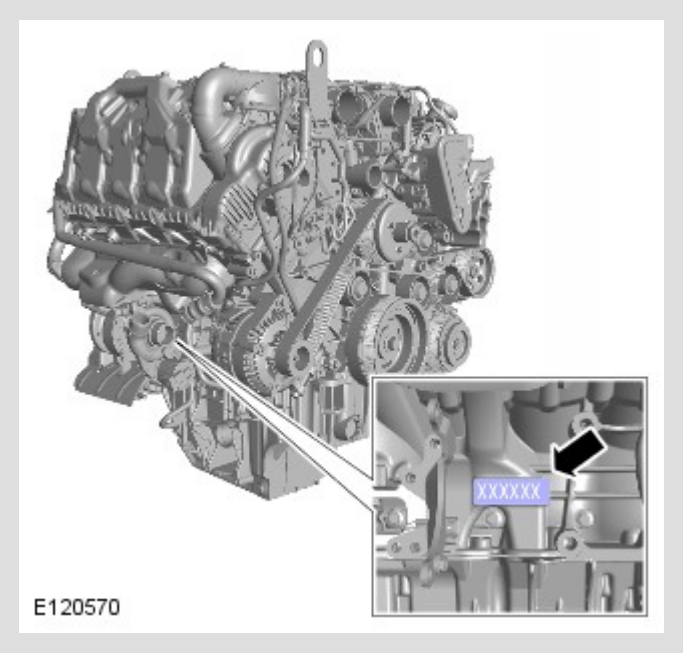

The 3.6 Litre V8 Diesel Engine Serial Number is stamped on the RH side of the cylinder block.

4.4 Litre V8 Diesel Engine Serial Number

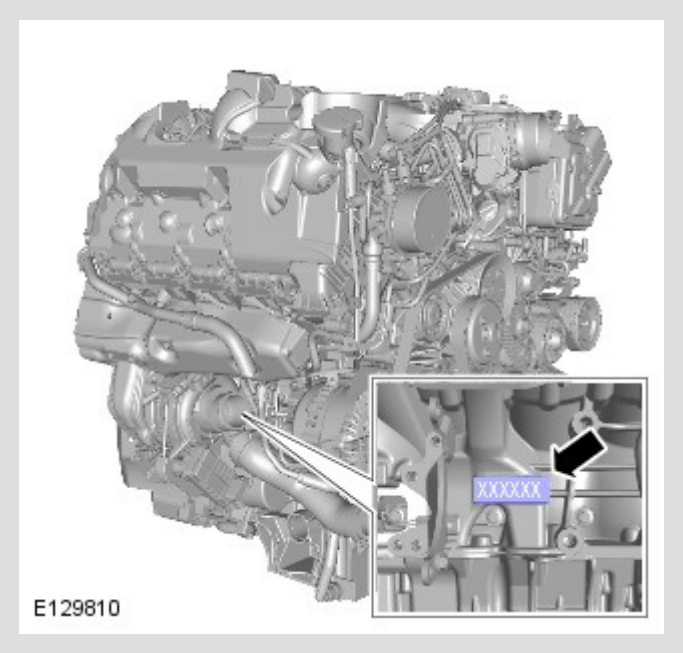

The 4.4 Litre V8 Diesel Engine Serial Number is stamped on the RH side of the cylinder block.

5.0 Litre SC and 5.0 Litre NA V8 Petrol Engine Serial Number

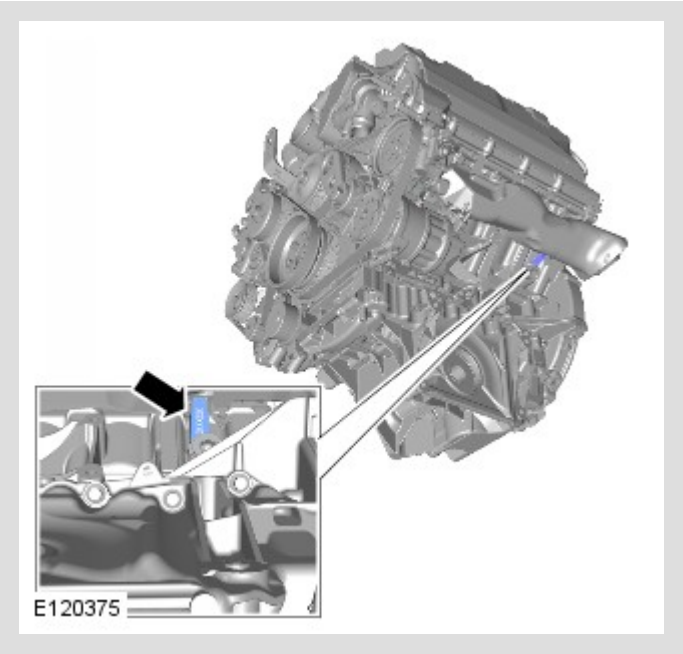

The 5.0 Litre SC and 5.0 Litre NA V8 Petrol Engine Serial Number is stamped on the LH side of the cylinder block.

Transmission Serial Number

NOTE:

Some variation in the illustrations may occur, but the essential information is always correct.

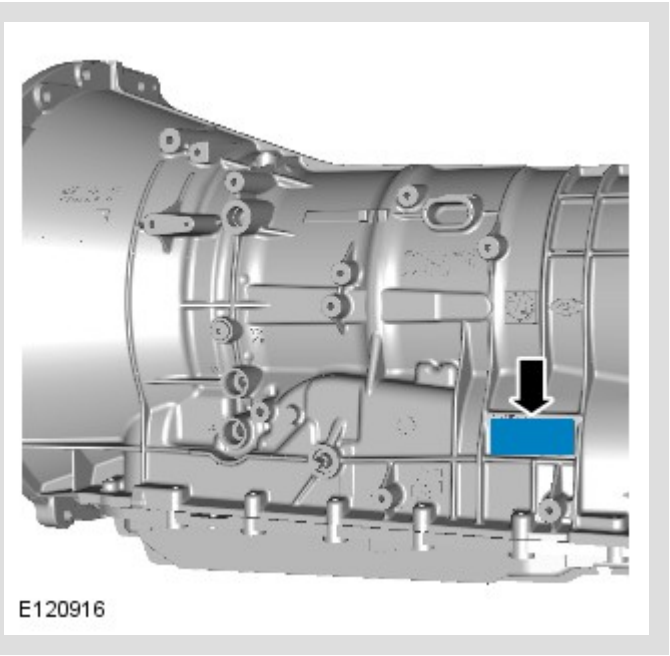

The transmission serial number is on a plate attached to the LH side of the transmission casing.

Front Differential Serial Number

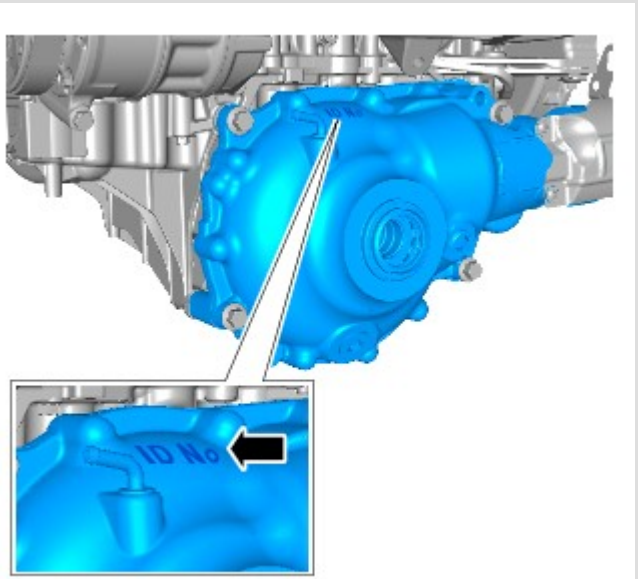

The Front Differential Serial Number is stamped on top of the differential casing and is located above the removable cross member.

Rear Differential Serial Number

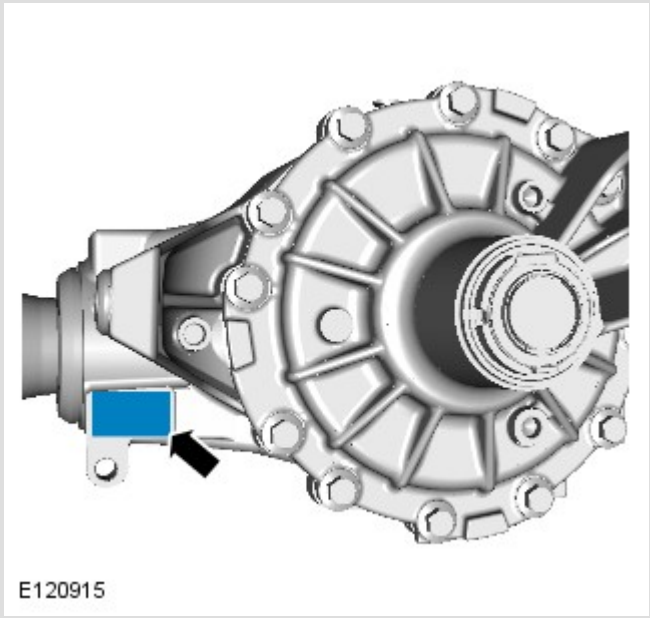

The Rear Differential Serial Number is stamped on the underside of the differential casing adjacent to the front mounting.

Transfer Case Serial Number

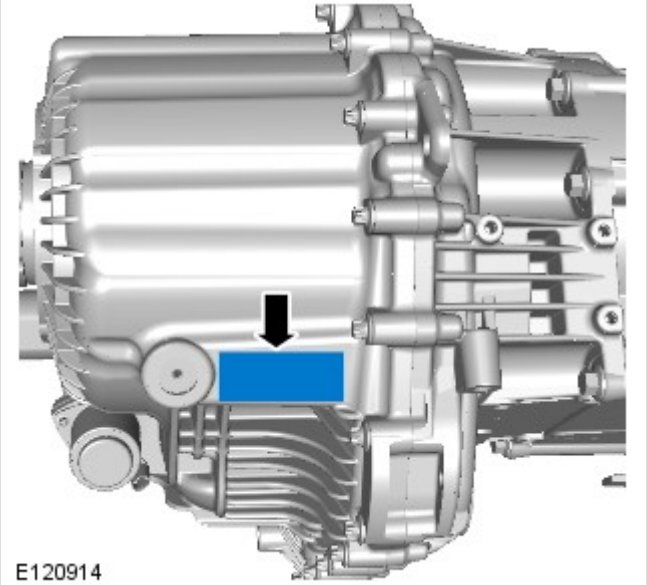

The Transfer Case serial number is stamped on the RH side of the transfer case and may also be on a bar coded self-adhesive label attached to the case.

JACKING AND LIFTING

DESCRIPTION AND OPERATION

GENERAL

WARNING:

The following instructions must be adhered to before raising the vehicle off the ground:

- Position vehicle on a solid, level surface.
- Apply the parking brake.
- Select 'P' - PARK on automatic transmission selector and 'H' High on transfer case.

WARNING:

If the drive shaft(s) are to be disconnected, it will be necessary to raise all four wheels off the ground in order that the shaft(s) can be rotated. DO NOT use the customer jack and ensure that the vehicle is adequately supported on axle stands. With the vehicle raised, it will be necessary to release the park brake and select Neutral - 'N' in the main transmission to enable the drive shaft(s) to be rotated

CAUTIONS:

- To avoid damage to the underbody components of the vehicle, the following instructions must be adhered to:
- Do not position jacks or axle stands under the following components:

- Body structure other than any approved jacking or lifting points
- Bumpers
- Fuel lines
- Fuel tank
- Brake lines
- Front or rear suspension arms

- Steering linkage
- Transfer case
- Front or rear differential units
- Transmission
- Engine oil pan - See note below

NOTE:

For certain repair operations, it may be necessary to support the engine under the oil pan. In this case, a block of hardwood or a rubber pad must be positioned on the jack lifting pad to protect the oil pan.

VEHICLE JACK

The jack provided with the vehicle is only intended for use in an emergency such as changing a tire. DO NOT use the jack for any other purpose. Refer to the Owner's Handbook for the vehicle jack location points and jacking procedures.

⚠ WARNING:

Never work under a vehicle supported solely by the vehicle jack.

HYDRAULIC JACK

A hydraulic jack with a minimum lifting capacity of 1500 kg, (3,300 lbs) must be used.

⚠ WARNINGS:

- Do not commence work on the underside of the vehicle until suitable axle stands have been placed in the correct position.
- Always chock the wheels when jacking. The parking brake may be ineffective when the wheel(s) are off the ground.

RAISING AND SUPPORTING THE VEHICLE

To assist in raising the vehicle, jacking points are provided as shown in the following illustrations.

RAISING THE FRONT OF THE VEHICLE

Apply the parking brake.

Select 'P' - PARK on automatic transmission selector.

WARNING:

Always chock the rear wheels when jacking the front of the vehicle.

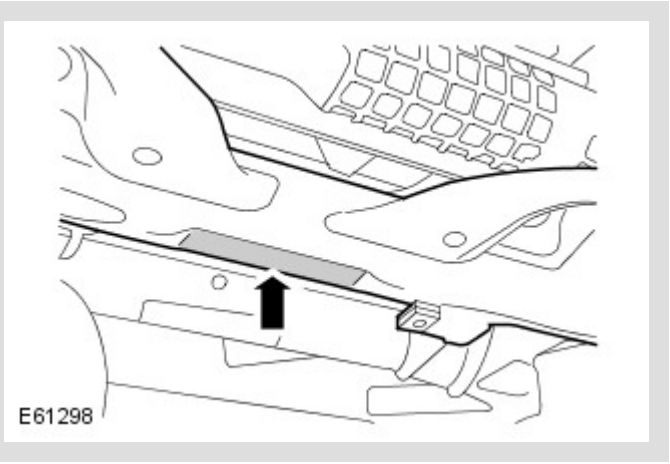

Position the lifting pad of the hydraulic jack under the centre of the front sub-frame, front cross member.

With the vehicle raised to the desired height, position axle stands under, either, the front sub-frame or the recommended customer jacking points.

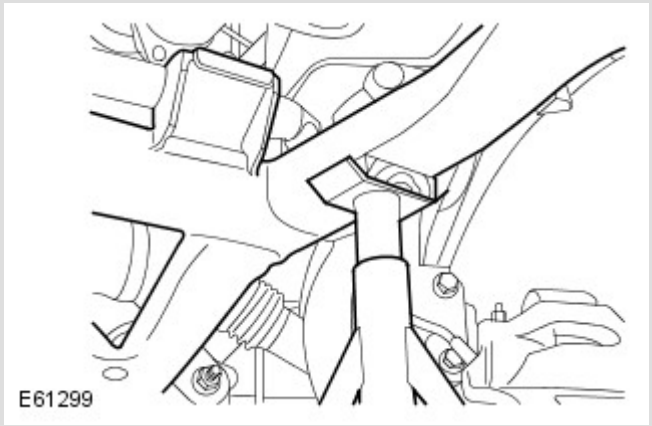

CAUTION:

Position suitable material between axle stands and component/body to prevent damage.

Carefully lower jack until vehicle rests on axle stands.

WARNING:

Before commencing work on the underside of the vehicle, ensure that axle stands are correctly positioned and vehicle is securely supported.

Reverse procedure when removing vehicle from stands.

RAISING THE REAR OF THE VEHICLE

Select 'P' - PARK on automatic transmission selector.

WARNING:

Always chock the front wheels when jacking the rear of the vehicle.

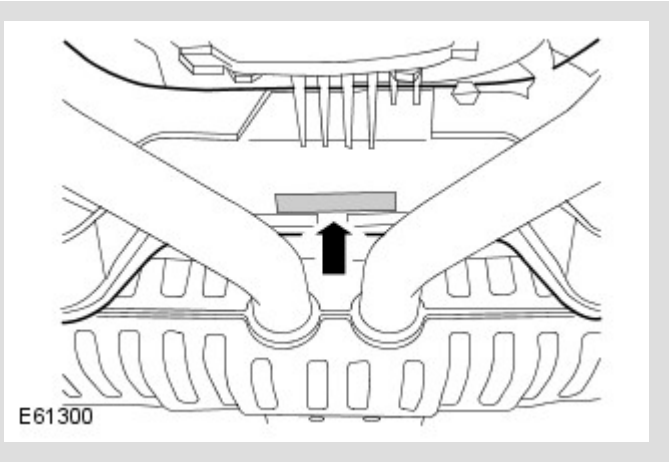

Position the lifting pad of the hydraulic jack under the centre of the rear sub-frame, rear cross member as shown.

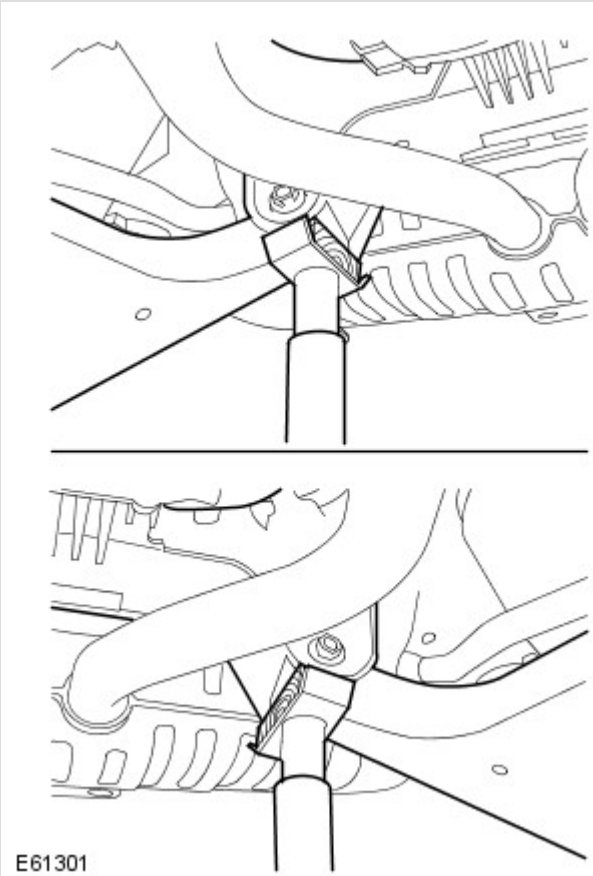

With vehicle raised to desired height, position axle stands under the rear sub-frame. Alternatively, the axle stands may be positioned under, either, the recommended customer jacking points or the front mounting points of the rear sub-frame.

CAUTION:

Position suitable material between axle stands and component/body to prevent damage.

Carefully lower jack until vehicle rests on axle stands.

WARNING:

Before commencing work on underside of vehicle, ensure that axle stands are correctly positioned and vehicle is securely supported.

Reverse procedure when removing vehicle from stands.

JACKING AND LIFTING

DESCRIPTION AND OPERATION

Vehicle on Wheels - Four-Post Ramp

WARNING:

If the drive shaft(s) are to be disconnected, it will be necessary to raise all four wheels off the ramp in order that the shaft(s) can be rotated. Refer to the 'Wheel Free Lift - Four-Post Ramp' section below for lifting instructions then release the parking brake and select NEUTRAL 'N' in the transmission.

WARNING:

Do not push the vehicle backwards and forwards along the ramp in order to gain access to the drive shaft fixings.

Position the vehicle on the ramp with the front and rear of the vehicle equidistant from the ends of the ramp. Chock the wheels, select NEUTRAL in the transmission and where practicable, apply the parking brake.

Wheel Free Lift - Four-Post Ramp

⚠ WARNING:

The vehicle cannot be supported safely in a wheel free condition using the wheel free facility of a four-post ramp, and under no circumstances must this method be used.

Raising and Supporting the Vehicle

1. Position vehicle on ramp.

2. Position suspension in 'off-road' height.

3. Apply parking brake.

4. Raise ramp to desired height.

5. Using suitable equipment, raise the vehicle to the desired height and position axle stands to recommended customer jacking points.

CAUTION:

Place suitable material between axle stands and body to avoid damage to vehicle.

6. Lower vehicle slowly until weight of vehicle rests on axle stands and road wheels are just clear of ramp.

7. Ensure that the vehicle is correctly supported on all four axle stands.

8. Lower the ramp to suitable working height.

WARNING:

Make sure that the vehicle is stable before commencing work.

NOTE:

Return the suspension to 'normal ride height' when the vehicle is removed from the ramp.

Two-Post Lift

CAUTION:

If the drive shaft(s) are to be removed, release the parking brake and select NEUTRAL 'N' in the transmission in order that the shaft(s) can be rotated when the vehicle is raised to the desired height.

1. Position the vehicle with the centre of the lift pillars aligned approximately with the front of the driver /passenger seat cushions.

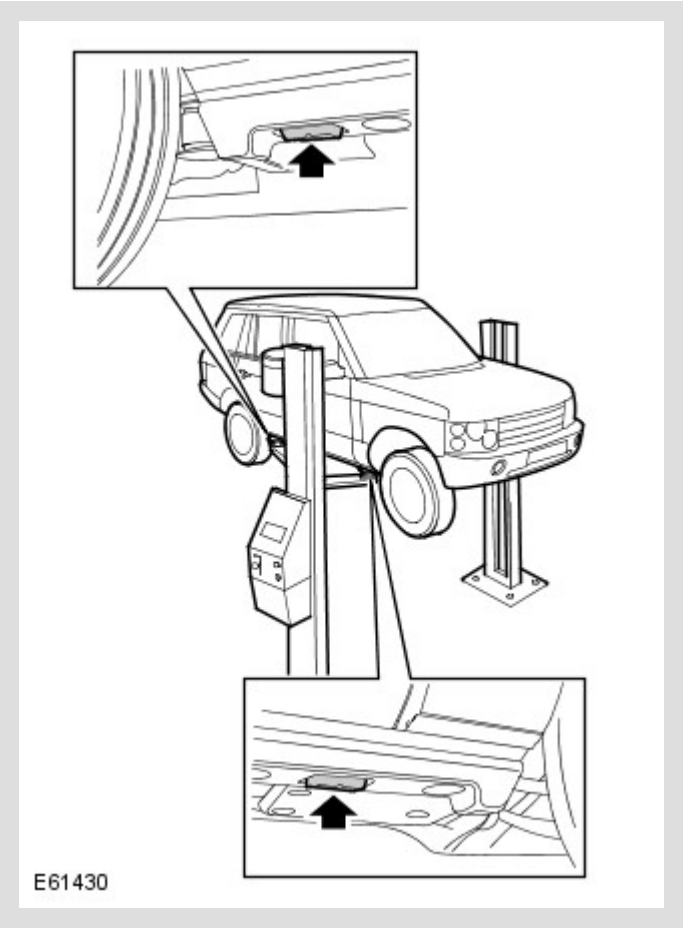

2. Extend the lifting arms and position the pad of each lifting arm beneath the recommended customer jacking points.

3. Raise the vehicle until the wheels are just clear of the ground and check that the pads of each lifting arm are still correctly positioned.

4. Raise the vehicle to the desired height.

5. Ensure that the vehicle is correctly supported on all four lifting pads, that pads are still correctly positioned and are in full contact with the body.

⚠ WARNING:

Ensure that the vehicle is stable before commencing work.

JACKING AND LIFTING

DESCRIPTION AND OPERATION

TOWING/LASHING EYES

CAUTION:

The single towing/lashing eyes at the front and rear of the vehicle are designed for vehicle recovery purposes only and MUST not be used to tow a trailer or caravan.

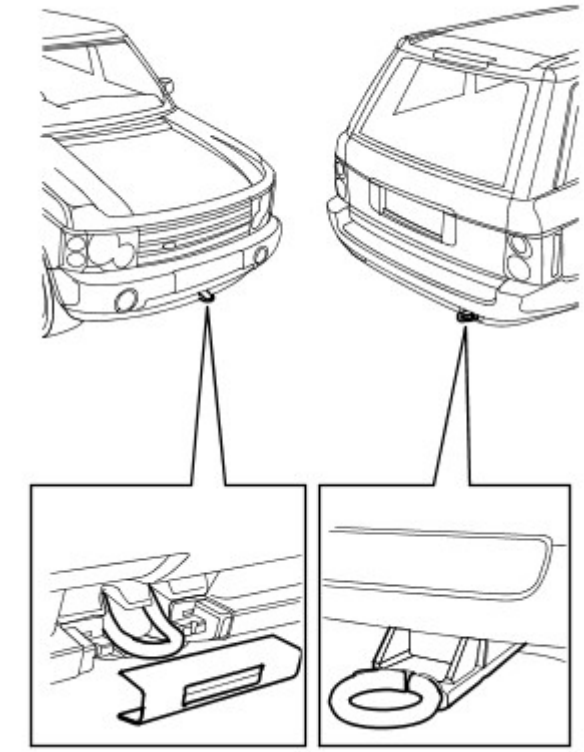

E61431

The front towing/lashing eye is accessible after releasing the towing eye access panel and removing the panel.

CAUTIONS:

- Ensure that during towing, the towing attachment does not contact the bumper.
- The rear towing/lashing eye should only be used for towing another vehicle or for recovery purposes to enable this vehicle to be positioned in order that the front towing eye may be used for recovery/towing.

4 WHEEL TOWING

CAUTIONS:

- Suspended towing of this vehicle MUST NOT be attempted, if four wheel towing is not possible, vehicle must be recovered on a suitable trailer.
- The vehicle may be towed for a maximum of 1 hour or 31 miles (50 km) at a maximum speed of 31 mph (50 km/h), these limits MUST NOT be exceeded.
- The following procedures must be followed to ensure that the vehicle is towed in a safe condition and damage to the vehicle transmission system is prevented.

1. Remove the front towing/lashing eye access panel.

2. Secure the towing attachment from the recovery vehicle to the towing/lashing eye.

CAUTION:

Ensure that the towing attachment will not contact the front bumper during towing.

3. Apply the parking brake.

4. Insert ignition key and turn the ignition switch to position 'II'.

CAUTION:

If 'N' - Neutral cannot be selected, front and rear driveshafts must be removed before vehicle is towed.

6. Apply the footbrake and move the automatic transmission selector lever to the 'N' Neutral position.

NOTE:

If electrical power is not available, use the manual interlock release tab on the selector lever to move the selector lever to the Neutral position.

7. Select 'H' - HIGH on the transfer box.

CAUTION:

If electrical power is not available, and 'H' - HIGH cannot be selected, the vehicle may not be towed but must be recovered on a suitable trailer. If, however, the transfer box was in 'H' - HIGH when electrical power was lost, the vehicle may still be towed.

8. Release the parking brake.

WARNING:

Do not release the parking brake until towing is about to commence. Whilst towing, do not attempt to remove the ignition key and do not turn the key to any position other than 'II'. With the engine switched off, the power assisted steering system and brake booster will be inoperative thereby resulting in an increase in the effort required to turn the steering wheel and apply the brakes.

CAUTION:

The vehicle tow connections should only be used in normal road conditions, 'snatch' recovery must be avoided.

ON COMPLETION OF 4 WHEEL TOWING

1. Apply the parking brake.

2. Detach towing equipment from towing/lashing eyes.

3. Install the towing eye access panel.

TRANSPORTING BY TRAILER

CAUTION:

Use the towing/lashing eyes at the front and rear of the vehicle, DO NOT secure lashing hooks or restraints to any other part of the vehicle.

Position the vehicle, apply the parking brake and select 'N' - Neutral on the automatic transmission selector lever.

MAINTENANCE SCHEDULES

DESCRIPTION AND OPERATION

Torque Specifications

DESCRIPTION	NM	LB-FT
Seat frame fixing Torx screws	40	30
Seat belt fixing Torx screws	40	30
Road wheel nuts	140	103

CAUTION:

Unless stated otherwise, the following operations must be carried out at every indicated service interval.

UNDERBONNET VIEW - 5.0 LITRE NA

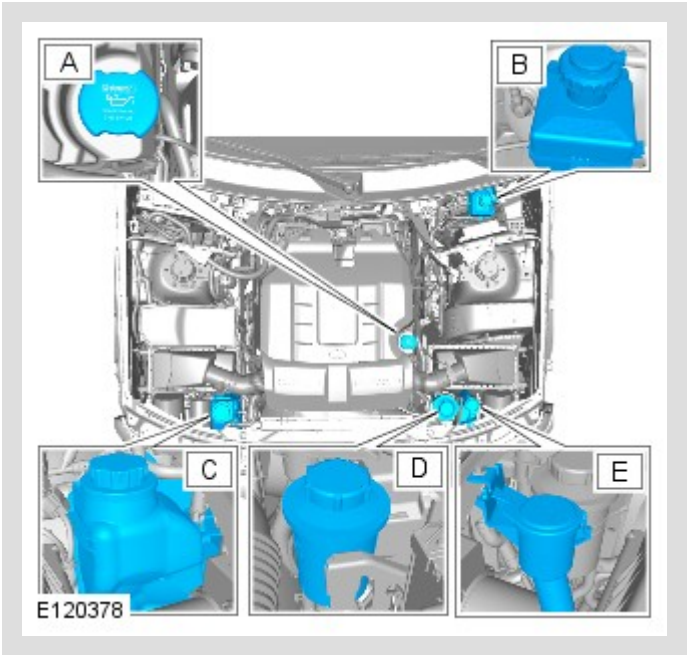

- **A.** Engine oil filler cap
- **B.** Brake fluid reservoir - LHD illustrated, RHD on opposite side
- **C.** Coolant expansion tank
- **D.** Power steering fluid reservoir
- **E.** Windshield washer fluid reservoir

UNDERBONNET VIEW - 5.0 LITRE SC

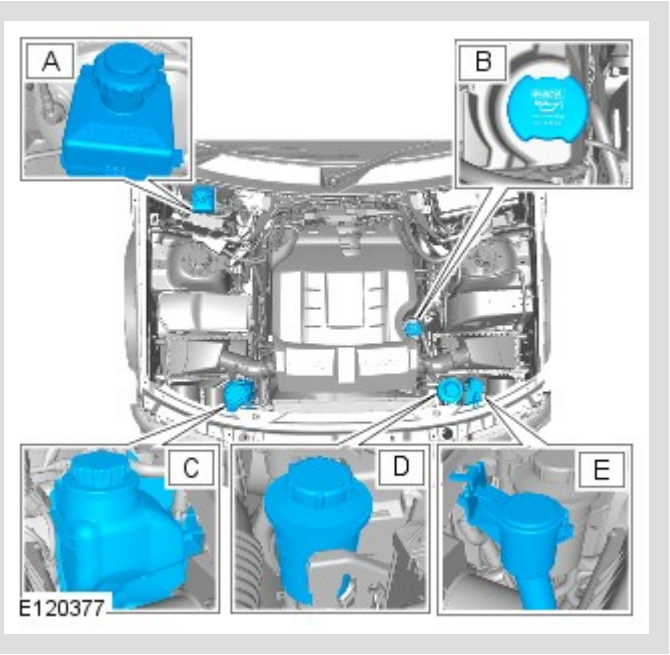

- **A.** Brake fluid reservoir - RHD illustrated, LHD on opposite side
- **B.** Engine oil filler cap
- **C.** Coolant expansion tank
- **D.** Power steering fluid reservoir
- **E.** Windshield washer fluid reservoir

MAINTENANCE OPERATIONS

Seats and Safety Belts

Note: The following procedures should only be completed when carrying out Service Inspection 1 and Service Inspection 2.

Front seat fixings

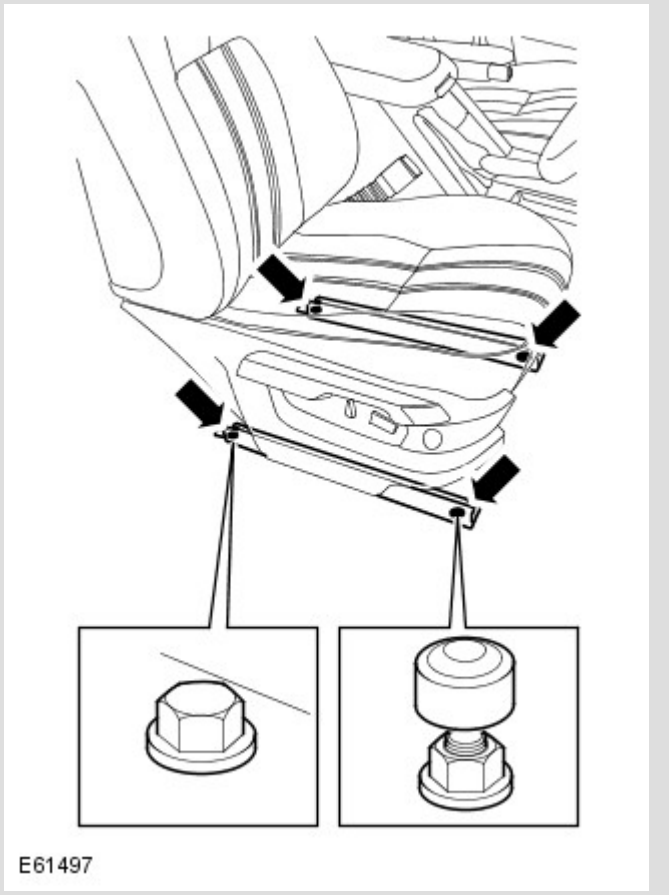

1. Check front seat fixings are secured to the floor and that the seat frames show no signs of movement.

Rear seat frame front fixings

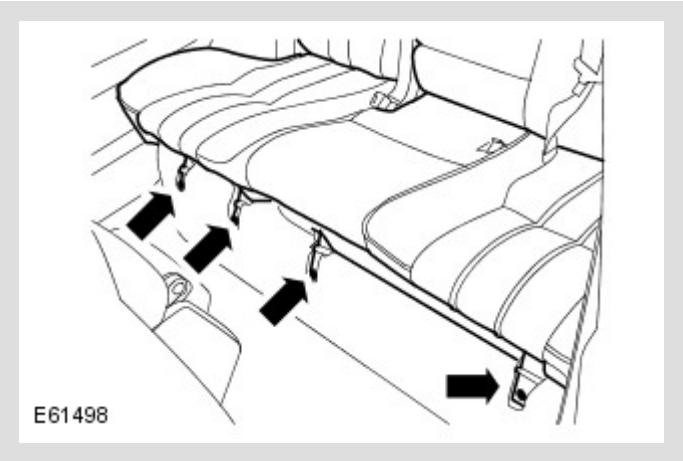

2. Check that the rear seat frame front fixings are secure and that the seat frames show no signs of movement.

Rear seat frame rear fixings

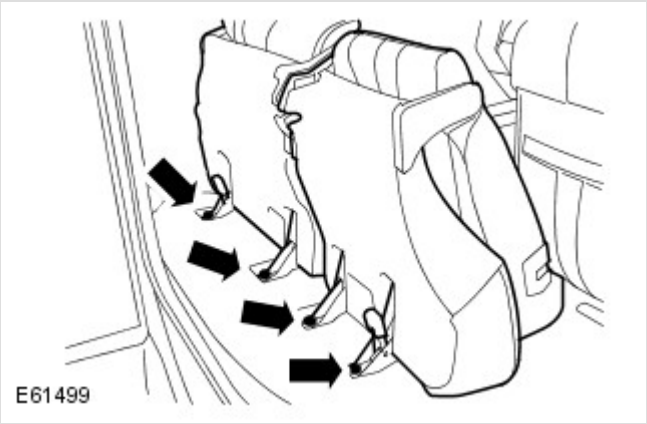

3. Release the catch and fold the rear seats forwards, check that the rear seat frame rear fixings are secured to the floor and that the seat frames show no signs of movement.

4. Check rear seat catch locking bars are secured to the floor and show no signs of movement.

5. Fold the rear seats back on completion.

Front seat controls

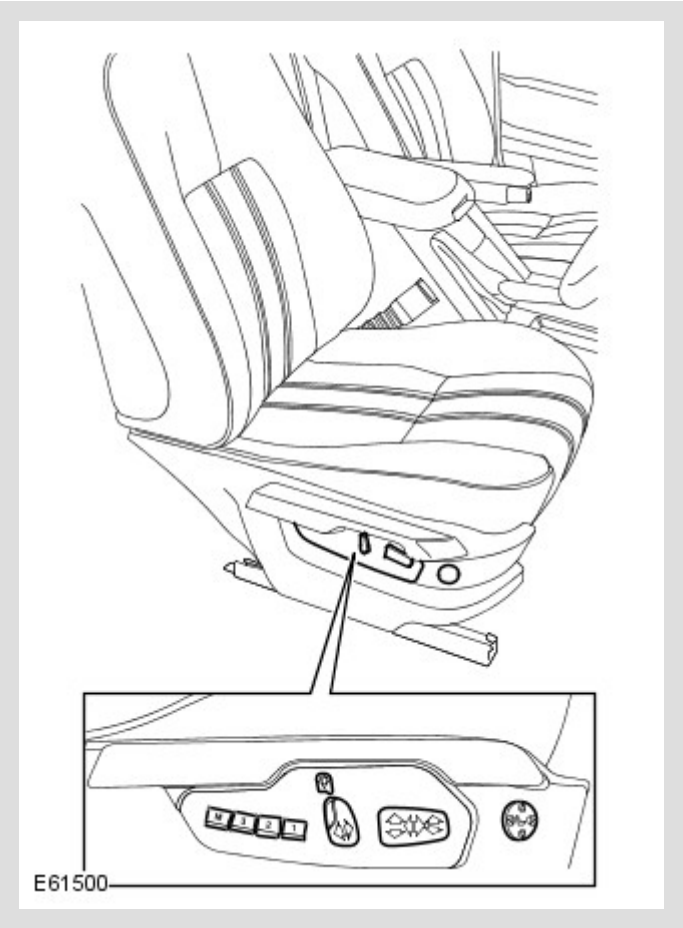

6. Check operation of all seat controls.

7. Fully extend each safety belt and check that it returns unassisted; repeat for all belts.

8. Check entire length of safety belt webbing for signs of fraying or damage; repeat for all belts.

9. Connect each safety belt to the correct buckle, check safety belt buckle and tongue are secure; check that buckle releases tongue correctly.

10. Check all safety belt and buckle mountings and fixings for security.



11. Check front safety belt height adjusters for correct operation.

LAMPS, HORNS AND WARNING INDICATORS

1. Check side, head, fog, reversing and tail lamps for correct operation.

2. Check operation of headlamp automatic levelling system - if installed.

3. Check turn signals and hazard warning lamps for correct operation.

4. Check brake (stop) lamps for correct operation.

5. Check all exterior lamp lenses for clarity and condition; pay particular attention to headlamp and fog lamp lenses for stone chips or damage.

6. Check horn for loud, clear sound.

7. Switch on side/headlamps and check that side/headlamp reminder warning sounds when door is opened.

8. Check operation of interior courtesy lamps.

9. Check operation of all instrument pack warning and indicator lamps.

WASHERS AND WIPERS

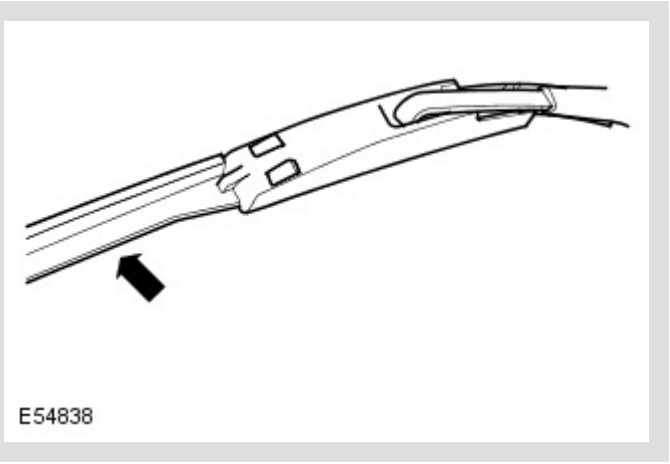

1. Check all wiper blades for condition and signs of splits or damage.

2. Check security of wiper arms.

3. Operate front and rear windshield washers, check that jets are clear and correctly aimed.

4. Operate front and rear wipers at all speeds and check for smooth, smear free operation.

CHECK HIGH/LOW GEAR ENGAGEMENT

1. Select LOW range gear, drive vehicle forwards 3 to 4 vehicle lengths, stop vehicle and select HIGH range gear - gears must engage smoothly.

BATTERY

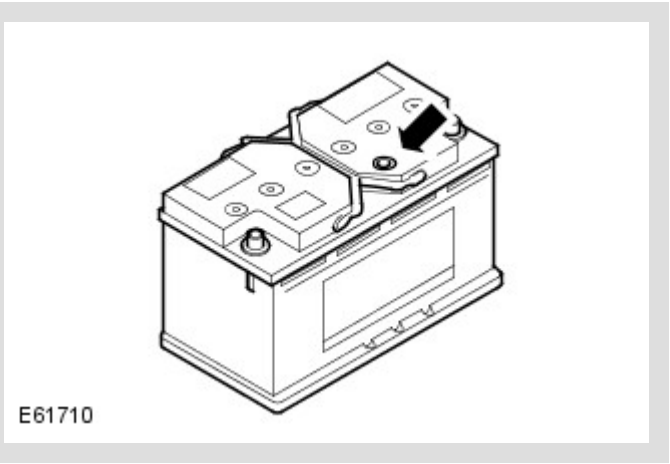

1. Check battery condition by checking color of condition indicator.

- Green = O.K.
- Black = Battery requires charging

- Yellow = New battery required

POLLEN FILTER

1. Replace pollen filter.
For additional information, refer to: Plenum Chamber (412-01 Air Distribution and Filtering, Removal and Installation).

CORROSION/COSMETIC INSPECTION

1. Carry out the annual corrosion/cosmetic inspection using the Annual Corrosion Inspection Sheet.

WHEELS AND TIRES

1. Check that tires comply with manufacturer's specification.
For additional information, refer to: Specifications (204-04 Wheels and Tires, Specifications).

2. Check/adjust tire pressures including spare.
For additional information, refer to: Specifications (204-04 Wheels and Tires, Specifications).

3. Vehicles with Uni-directional tires installed: Mark the wheel to stud relationship of each road wheel and note location of each road wheel to its respective hub.

4. Loosen road wheel nuts. Raise vehicle to a wheel free condition.
For additional information, refer to: Lifting (100-02 Jacking and Lifting, Description and Operation).

5. Remove the road wheels.

6. Visually check tires for condition, lumps or bulges. Check tread depth across the width of the tire and around the circumference; ensure that remaining tread depth does not contravene local legislative requirements.

> **NOTE:**
>
> Do not install wheels at this stage.

BRAKING SYSTEM

1. Inspect front brake pads for wear.
For additional information, refer to: Specifications (206-03 Front Disc Brake, Specifications).

2. Inspect rear brake pads for wear.
For additional information, refer to: Specifications (206-04 Rear Disc Brake, Specifications).

3. Check brake calipers for signs of fluid leaks.

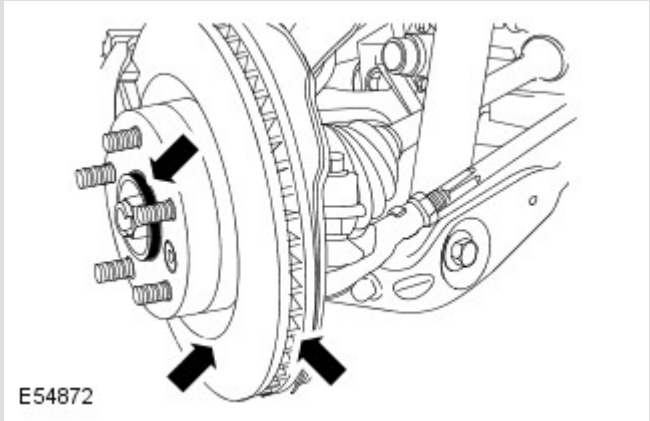

4. Check brake discs for condition.

5. Check all brake booster and brake system pipes and hoses for condition, chafing and leaks.

6. Clean road wheel hub spigots and apply grease, Land Rover Part Number RYL 105020 to the wheel mating surface of each spigot.

7. Vehicles with Uni-directional tires installed: Install road wheels on their respective hubs ensuring that stud to wheel relationship is maintained.

8. Vehicles with NON uni-directional tires installed: Install wheels on the opposite side of the vehicle but ensure that they are on the same axle as they were originally installed.

9. Install road wheel nuts and tighten to 140 Nm (103 lb-ft).

10. Every 3 years or 45,000 miles (72,000 km): Replace brake fluid.
For additional information, refer to: Brake System Bleeding - Vehicles With: High Performance Brakes (206-00 Brake System - General Information, General Procedures) /
Brake System Bleeding - Vehicles With: Standard Brakes (206-00 Brake System - General Information, General Procedures).

Parking Brake

1. Check the adjustment of the parking brake.
For additional information, refer to: Parking Brake Shoe and Lining Adjustment (206-05 Parking Brake and Actuation, General Procedures).

COOLING SYSTEM

1. Check specific gravity of coolant using a hydrometer.

NOTE:

A suitable hydrometer is available from the Equipment Programme under Part Number 511 3302 001 00.

2. Top-up cooling system if necessary.
For additional information, refer to: Specifications (303-03 Engine Cooling - 5.0L, Specifications).

CAUTION:

Anti-freeze concentration must be maintained at 50%.

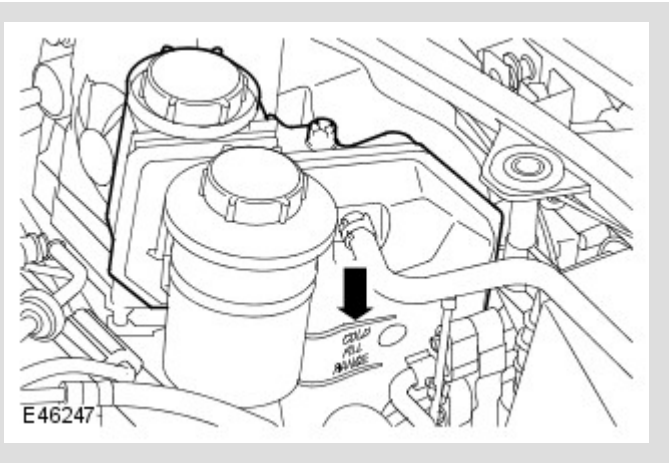

WARNING:

Since injury such as scalding could be caused by escaping steam or coolant, do not remove the filler cap from the coolant expansion tank whilst the system is hot.

CAUTION:

Engine coolant will damage the paint finished surfaces. If coolant is spilled, immediately remove the coolant and wash the area with water.

3. Check the level of coolant in the expansion tank. With the engine cold, the coolant level must be to the **'UPPER LEVEL'** indicator mark above the **'COLD FILL RANGE'** text on the side of the expansion tank. Ignore any coolant which may be visible in the top section of the tank.

4. If topping-up is required, remove expansion tank filler cap and top-up coolant level to the **'UPPER LEVEL'** indicator mark.
For additional information, refer to: Specifications (303-03 Engine Cooling - 5.0L, Specifications).

CAUTION:

Always top-up with a 50% mixture of anti-freeze and water.

5. Install expansion tank filler cap, tighten cap until ratchet is heard to 'click'.

6. Every 10 years or 150,000 miles (240,000 km): Replace the coolant.
For additional information, refer to: Cooling System Draining, Filling and Bleeding - Vehicles With: Supercharger (303-03 Engine Cooling - 5.0L, General Procedures) /
Cooling System Draining, Filling and Bleeding - Vehicles Without: Supercharger (303-03 Engine Cooling - 5.0 L, General Procedures).

IGNITION SYSTEM

1. Every 7 years or 105,000 miles (168,000 km) - 5.0 Litre NA and 5.0 Litre SC litre V8 engines: Replace spark plugs.
For additional information, refer to: Ignition Coil-On-Plug (303-07 Engine Ignition - 5.0L, Petrol, Removal and Installation).

AIR FILTERING

1. Every 4 years or 60,000 miles (96,000 km) - 5.0 Litre SC: Replace the air cleaner elements.
For additional information, refer to: Air Cleaner Element (303-12 Intake Air Distribution and Filtering - 5.0L, Vehicles With: Supercharger, Removal and Installation).

2. Every 5 years or 75,000 miles (120,000 km) - 5.0 Litre NA: Replace the air cleaner elements.
For additional information, refer to: Air Cleaner Element (303-12 Intake Air Distribution and Filtering - 5.0L, Petrol, Vehicles Without: Supercharger, Removal and Installation).

FRONT END ACCESSORY DRIVE (FEAD) BELT

1. Check the condition of the FEAD belt.

2. Remove all traces of mud and dirt from the belt and pulleys.

3. Check the belt for signs of oil contamination, splitting and wear.

4. Every 10 years or 150,000 miles (240,000 km): Replace the FEAD belt.
For additional information, refer to: Accessory Drive Belt - Vehicles With: Supercharger (303-05 Accessory

Drive - 5.0L, Removal and Installation) /
Accessory Drive Belt - Vehicles Without: Supercharger (303-05 Accessory Drive - 5.0L, Removal and Installation).

SUPERCHARGER/COOLING FAN DRIVE BELT

1. Check the condition of the supercharger/cooling fan drive belt.

2. Remove all traces of mud and dirt from the drive belt and pulleys.

3. Check the drive belt for signs of oil contamination, splitting and wear.

4. Every 7 years or 105,000 miles (168,000 km): Replace the supercharger drive belt.
For additional information, refer to: Supercharger Belt (303-05 Accessory Drive - 5.0L, Removal and Installation).

5. Every 7 years or 105,000 miles (168,000 km): Replace the cooling fan drive belt.
For additional information, refer to: Cooling Fan Belt (303-05B, Removal and Installation).

FLUID LEVELS

Brake fluid reservoir

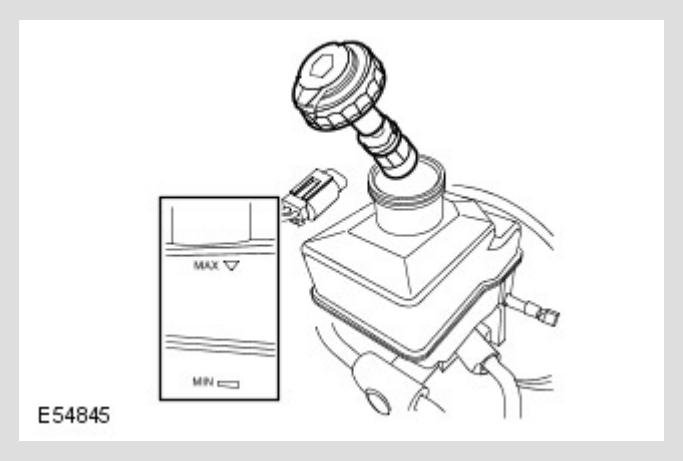

1. Check the fluid level in the brake fluid reservoir, the level must be to the **'MAX'** mark on the reservoir; top-up if necessary.

2. Clean the area around the reservoir filler cap, remove cap.

3. If necessary, top-up using the recommended fluid to the **'MAX'** mark on the reservoir.
For additional information, refer to: Specifications (206-00 Brake System - General Information, Specifications).

4. Install the reservoir filler cap.

Power steering fluid reservoir

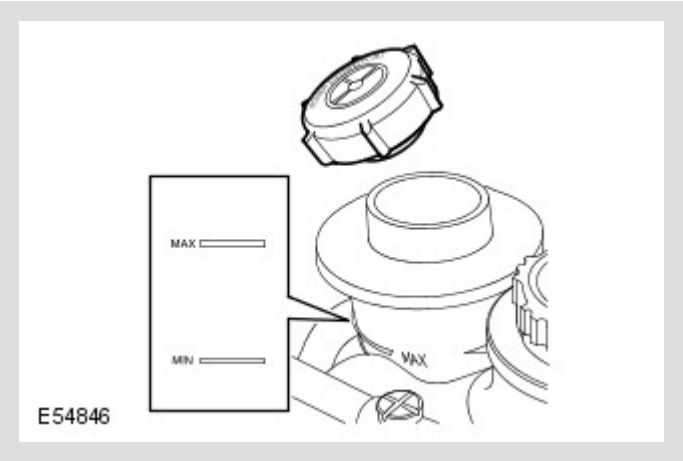

CAUTION:

To prevent over filling, check/top-up the system with the engine switched off and the system cold. Ensure that the steering wheel is in the straight ahead position, do not turn the steering wheel prior to checking the fluid level.

1. Check that the fluid level is to the mid-way mark between the **'MAX'** and **'MIN'** marks on the fluid reservoir, top-up if necessary.

2. Clean the area around the reservoir filler cap, remove cap.

3. If necessary, top-up using the recommended fluid to the mid-way mark on the reservoir.
For additional information, refer to: Specifications (211-02 Power Steering, Specifications).
.

CAUTION:

Do not fill reservoir above the 'MAX' mark.

4. Install the reservoir filler cap.

Windshield washer reservoir

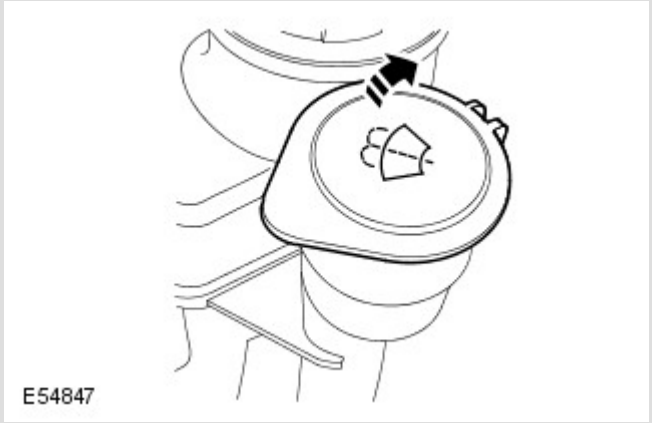

1. Remove the windshield washer reservoir filler cap.

2. Top-up the reservoir using a mixture of an approved windshield washer fluid and water until the level is to the bottom of the gauze filter in the reservoir filler neck.

3. Install the reservoir filler cap.

ENGINE OIL AND FILTER

1. Renew engine oil and filter.
For additional information, refer to: Specifications (303-01 Engine - 5.0L, Petrol, Vehicles Without: Supercharger, Specifications) /
Oil Filter Element (303-01 Engine - 5.0L, Petrol, Vehicles Without: Supercharger, Removal and Installation) /
Specifications (303-01 Engine - 5.0L, Vehicles With: Supercharger, Specifications) /
Oil Filter Element (303-01 Engine - 5.0L, Vehicles With: Supercharger, Removal and Installation).

AUTOMATIC TRANSMISSION

1. Every 10 years or 150,000 miles (240,000 km): Renew automatic transmission fluid.
For additional information, refer to: Specifications (307-01 Automatic Transmission/Transaxle - 5.0L, Petrol, Specifications) /
Transmission Fluid Pan, Gasket and Filter (307-01 Automatic Transmission/Transaxle - 5.0L, Petrol, Removal and Installation).

TRANSFER CASE

1. Every 5 years or 75,000 miles (120,000 km): Renew transfer case oil.
For additional information, refer to: Specifications (308-07 Transfer Case, Specifications) /
Transfer Case Draining and Filling (308-07 Transfer Case, General Procedures).

DRIVE AXLE/DIFFERENTIAL

1. Every 10 years or 150,000 miles (240,000 km): Renew front drive axle/differential oil.
For additional information, refer to: Differential Draining and Filling (205-03 Front Drive Axle/Differential, General Procedures).

2. Every 10 years or 150,000 miles (240,000 km): Renew rear drive axle/differential oil.
For additional information, refer to: Differential Draining and Filling (205-02 Rear Drive Axle/Differential, General Procedures).

SUSPENSION AND BODY MOUNTINGS

Note: The procedures in this section should only be completed when carrying out Service Inspection 1 and Service Inspection 2.

1. Check for free play in all suspension and body mounting rubbers.

2. Check condition of suspension rubber boots and gaiters.

FUEL SYSTEM

1. Check fuel system pipes, hoses and unions for chafing, leaks and corrosion.

2. Every 10 years or 150,000 miles (240,000 km): Renew the fuel filter.
For additional information, refer to: Fuel Filter (310-01 Fuel Tank and Lines - 5.0L, Petrol, Removal and Installation).

OIL/FLUID LEAKS

1. Check for oil/fluid leaks.

POWER STEERING

Note: The procedures in this section should only be completed when carrying out Service Inspection 1 and Service Inspection 2.

1. Check power steering rod ball joint fixings, gaiters and condition of ball joints and dust covers.

2. Check power steering pipes, hoses and unions for chafing, leaks and corrosion.

FAULT LAMP(S)

1. If fault lamp(s) are illuminated, test the associated system using the diagnostic tool and report findings.

ROAD TEST

1. Carry out road test of vehicle.
For additional information, refer to: Road/Roller Testing (100-00 General Information, Description and Operation).

GENERAL

1. Endorse Service Record.

2. Report any unusual features of vehicle condition and any additional work required.

2012.0 RANGE ROVER (LM), 204-00

SUSPENSION SYSTEM - GENERAL INFORMATION

SPECIFICATIONS

Air Spring Suspension

ITEM	SPECIFICATION
Type - Front	Independent MacPherson strut with air springs, gas twin tube dampers, height sensors and stabilizer bar. Driver selectable ride heights - Standard, off-road and access.
Type - Rear	Independent with air springs, gas single tube dampers, height sensors and stabilizer bar. Driver selectable ride heights - Standard, off-road and access.
*** Nominal heights from hub centre to wheel arch (not liner):**	
Front	493 mm (19.4 in)
Rear	483 mm (19.0 in)

*** Measurement taken with vehicle at unladen weight**

Wheel Alignment Specification (All Markets) - Front - Vehicles with V8 Naturally Aspirated Engines

NOTE:

All figures are with vehicle at 'Showroom' ride height - full fluids, full tank of fuel, no occupants/luggage, tires inflated to normal pressures

ITEM		LEFT-HAND		RIGHT-HAND		TOTAL/BALANCE	
Camber		**Nominal**	**Tolerance**	**Nominal**	**Tolerance**	**Nominal**	**Tolerance**
	Decimal degrees	-0.33°	± 0.75°	-0.33°	± 0.75°	0°	± 0.75°
	Degrees/minutes	-20'	± 45'	-20'	± 45'	0'	± 45'
		Minimum	**Maximum**	**Minimum**	**Maximum**	**Minimum**	**Maximum**
	Decimal degrees	-1.08°	0.42°	-1.08°	0.42°	-0.75°	0.75°
	Degrees/minutes	-1°5'	25'	-1°5'	25'	-45'	45'
Castor		**Nominal**	**Tolerance**	**Nominal**	**Tolerance**	**Nominal**	**Tolerance**
	Decimal degrees	6.09°	± 0.75°	6.09°	± 0.75°	0°	± 0.75°
	Degrees/minutes	6°5'	± 45'	6°5'	± 45'	0'	± 45'
		Minimum	**Maximum**	**Minimum**	**Maximum**	**Minimum**	**Maximum**
	Decimal degrees	5.34°	6.84°	5.34°	6.84°	-0.75°	0.75°

	Degrees/minutes	5°20'	6° 50'	5°20'	6° 50'	-45'	45'
Toe		**Nominal**	**Tolerance**	**Nominal**	**Tolerance**	**Nominal**	**Tolerance**
	Decimal degrees	0°	±0.10°	0°	±0.10°	0°	±0.20°
	Degrees/minutes	0'	±6'	0'	±6'	0'	±12'
		Minimum	**Maximum**	**Minimum**	**Maximum**	**Minimum**	**Maximum**
	Decimal degrees	-0.10°	0.10°	-0.10°	0.10°	-0.20°	0.20°
	Degrees/minutes	-6'	6'	-6'	6'	-12'	12'

Wheel Alignment Specification (All Markets) - Front - Vehicles with V8 Supercharged and Diesel Engines

NOTE:

All figures are with vehicle at 'Showroom' ride height - full fluids, full tank of fuel, no occupants/luggage, tires inflated to normal pressures

ITEM		LEFT-HAND		RIGHT-HAND		TOTAL/BALANCE	
Camber		**Nominal**	**Tolerance**	**Nominal**	**Tolerance**	**Nominal**	**Tolerance**
	Decimal degrees	-0.33°	± 0.75°	-0.33°	± 0.75°	0°	± 0.75°
	Degrees/minutes	-20'	± 45'	-20'	± 45'	0'	± 45'
		Minimum	**Maximum**	**Minimum**	**Maximum**	**Minimum**	**Maximum**

	Decimal degrees	-1.08°	0.42°	-1.08°	0.42°	-0.75°	0.75°
	Degrees/minutes	-1°5'	25'	-1°5'	25'	-45'	45'
Castor		**Nominal**	**Tolerance**	**Nominal**	**Tolerance**	**Nominal**	**Tolerance**
	Decimal degrees	6.09°	± 0.75°	6.09°	± 0.75°	0°	± 0.75°
	Degrees/minutes	6°5'	± 45'	6°5'	± 45'	0'	± 45'
		Minimum	**Maximum**	**Minimum**	**Maximum**	**Minimum**	**Maximum**
	Decimal degrees	5.34°	6.84°	5.34°	6.84°	-0.75°	0.75°
	Degrees/minutes	5°20'	6° 50'	5°20'	6° 50'	-45'	45'
Toe		**Nominal**	**Tolerance**	**Nominal**	**Tolerance**	**Nominal**	**Tolerance**
	Decimal degrees	0.08°	±0.10°	0.08°	±0.10°	0.15°	±0.20°
	Degrees/minutes	5'	±6'	5'	±6'	9'	±12'
		Minimum	**Maximum**	**Minimum**	**Maximum**	**Minimum**	**Maximum**
	Decimal degrees	-0.03°	0.18°	-0.03°	0.18°	-0.05°	0.35°
	Degrees/minutes	-2'	11'	-2'	11'	-3'	21'

Wheel Alignment Specification - Rear

NOTE:

All figures are with vehicle at 'Showroom' ride height - full fluids, full tank of fuel, no occupants/luggage, tires inflated to normal pressures

ITEM		LEFT-HAND		RIGHT-HAND		TOTAL/BALANCE		THRUST ANGLE	
Camber		**Nominal**	**Tolerance**	**Nominal**	**Tolerance**				
	Decimal degrees	-1.00°	± 0.75°	-1.00°	± 0.75°				
	Degrees/minutes	-1°	± 45'	-1°	± 45'				
		Minimum	**Maximum**	**Minimum**	**Maximum**				
	Decimal degrees	-1.75°	-0.25°	-1.75°	-0.25°				
	Degrees/minutes	-1°45'	-15'	-1°45'	-15'				
Toe		**Nominal**	**Tolerance**	**Nominal**	**Tolerance**	**Nominal**	**Tolerance**	**Nominal**	**Tolerance**
	Decimal degrees	0.10°	± 0.14°	0.10°	± 0.14°	0.20°	± 0.20°	0°	± 0.14°
	Degrees/minutes	6'	± 8'	6'	± 8'	12'	± 12'	0'	± 8'
		Minimum	**Maximum**	**Minimum**	**Maximum**	**Minimum**	**Maximum**	**Minimum**	**Maximum**
	Decimal degrees	-0.04°	0.24°	-0.04°	0.24°	0°	0.40°	-0.14°	0.14°
	Degrees/minutes	-2'	14'	-2'	14'	0'	24'	-8'	8'

SUSPENSION SYSTEM - GENERAL INFORMATION

FOUR-WHEEL ALIGNMENT (G1235834)

GENERAL PROCEDURES

57.65.02	STEERING GEOMETRY - CHECK (INCLUDES CASTER, CAMBER, KING PIN INCLINATION, TOE-IN/TOE-OUT ON TURNS AND REAR WHEEL ALIGNMENT)	ALL DERIVATIVES	0.8	USED WITHINS	
	STEERING GEOMETRY - CHECK +ADJUST (INC CASTOR, CAMBER, KING				

57.65.04	PIN INCLINATION, TOE IN/TOE OUT ON TURNS, REAR WHEEL ALIGNMENT)	ALL DERIVATIVES	1.2	USED WITHINS	

SPECIAL TOOL(S)



211-318(LRT-57-045)

Camber setting tool

NOTE:

A change in camber means a change in toe, therefore camber must always be adjusted first.

All vehicles

1. **NOTE:**

   Only use calibrated equipment recommended by Land Rover.

   Check the tie rod ends, suspension joints, wheel bearings and wheels and tires for damage, wear and free play.

   Check and adjust the tire pressures.

   Roll the vehicle backwards and forwards to settle the steering and suspension.

   Make sure the wheel alignment equipment is properly calibrated.

All vehicles

1. Note the readings from the steering geometry test equipment and adjust the geometry as required.

2. Adjust the rear wheel alignment.

3.

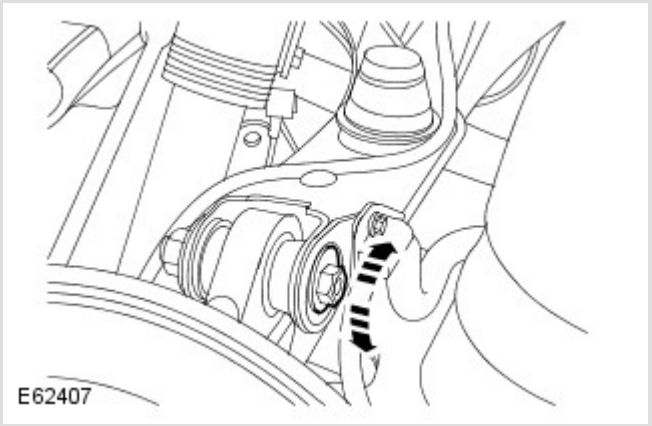

Adjust the rear camber.

Loosen the rear camber adjusting bolt.

Rotate the rear camber adjusting bolt until the correct value is obtained.

Tighten the nut to 165 Nm (121 lb.ft).

Repeat the above procedure for the other side.

4.

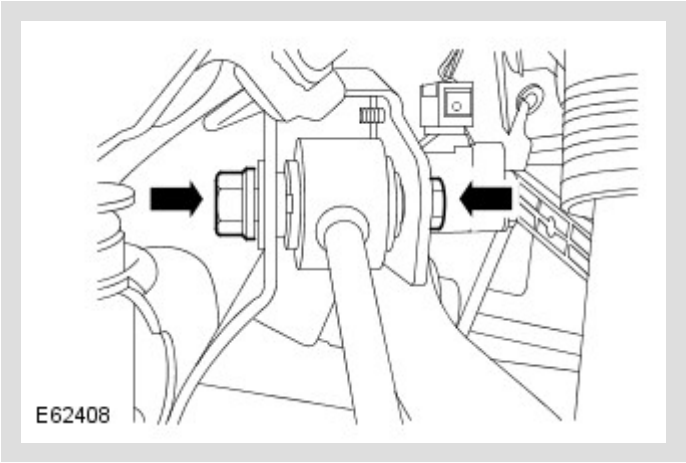

Adjusting the toe.

Loosen the tie-rod end lock nut.

Turn the eccentric and adjust the toe to the specified value.

Tighten the nut to 165 Nm (121 lb.ft).

Repeat the above procedure for the other side.

5. Adjust the front wheel alignment.

Vehicles with active damping

1.

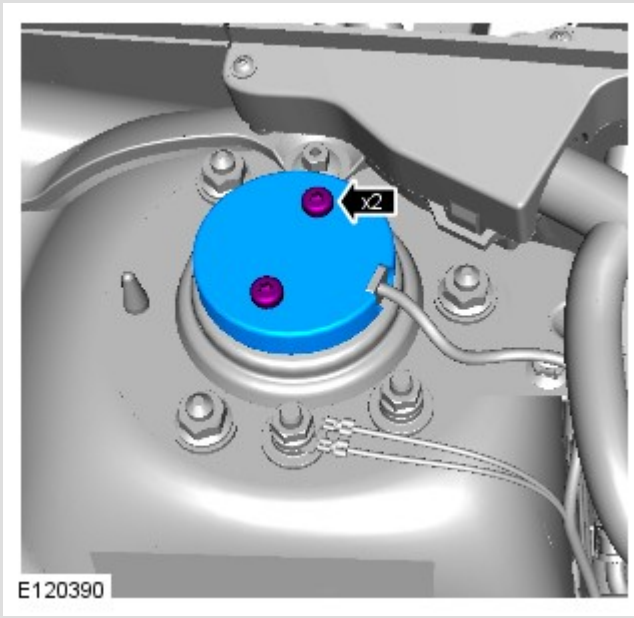

Remove the mass damper assembly.

Remove the 2 mass damper bolts.

Repeat the above procedure for the other side.

2.

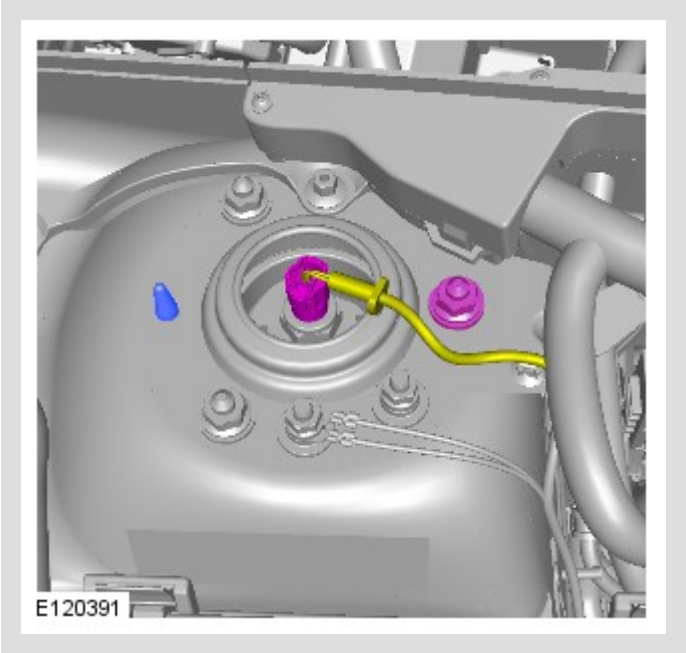

Adjust the front camber.

Disconnect the active damping wiring.

Break off the damper location pin.

Loosen the damper nut illustrated.

Repeat the above procedure for the other side.

All vehicles

1.

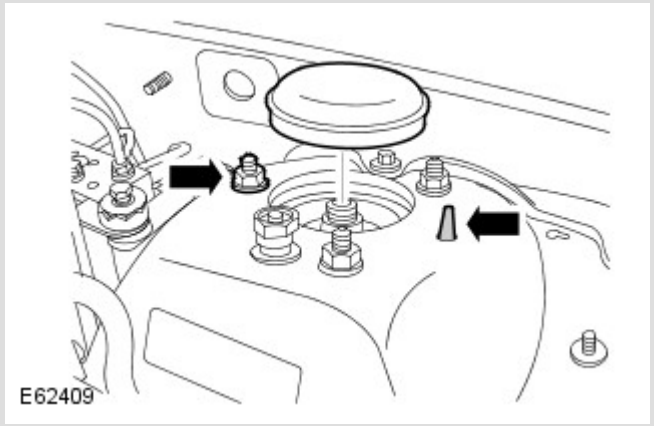

Adjust the front camber.

Remove the suspension turret cap.

Break off the damper location pin.

Loosen the damper nut illustrated.

Repeat the above procedure for the other side.

2.

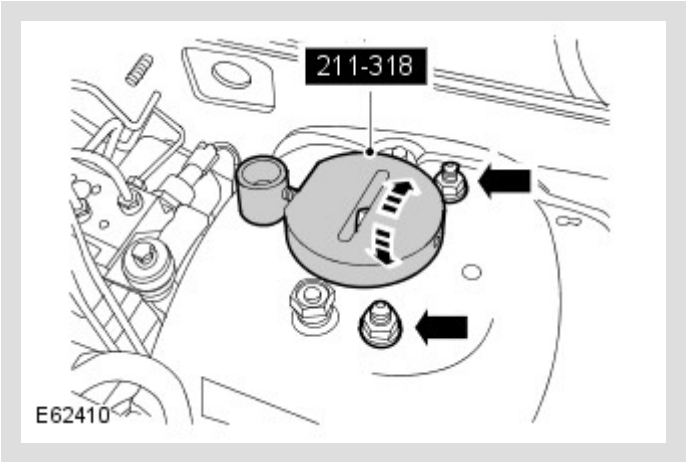

Install the special tool.

Loosen the 2 remaining damper nuts.

Adjust the camber to the specified value by rotating the nut on the special tool.

Tighten the 3 strut nuts to 56 Nm (41 lb.ft).

Repeat the above procedure for the other side.

Vehicles with active damping

1. Attach the active damping wiring.

   Repeat the above procedure for the other side.

2. Install the mass damper.

   Tighten the mass damper bolts to 9 Nm (7 lb.ft).

   Repeat the above procedure for the other side.

All vehicles

1. Adjust the front toe.

2. **CAUTIONS:**

   - Do not allow the gaiter to twist.
   - To prevent damage to the tie rods, use an additional wrench when loosening or tightening the components.

NOTE:

Both tie rods must be rotated by an equal amount.

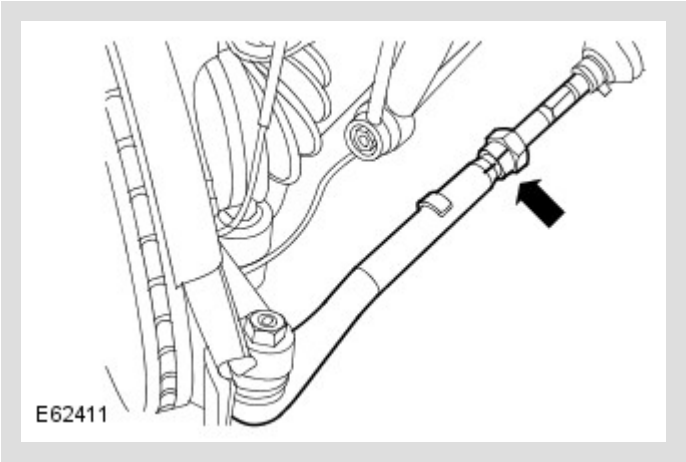

Loosen the tie-rod end lock nut.

Align the steering to straight ahead.

Adjust the steering gear tie rod, rotate using the hexagon on the tie rod.

Check, and if necessary, repeat the wheel alignment procedure until the correct values are obtained.

Tighten the tie rod end lock nut to 55 Nm (40 lb.ft).

Repeat the above procedure for the other side.

SUSPENSION SYSTEM - GENERAL INFORMATION

FRONT WHEEL BEARING AND WHEEL HUB RUNOUT CHECK (G1348313)

GENERAL PROCEDURES

NOTES:

- Some variation in the illustrations may occur, but the essential information is always correct.
- LH illustration shown, RH is similar.

1.

WARNING:

Make sure to support the vehicle with axle stands.

Raise and support the vehicle.

2. Remove the road wheel.

3.

CAUTIONS:

- Do not allow the brake caliper to hang on the brake hose.
- LH side: Do not allow the brake caliper to hang on the brake pad wear warning sensor lead.

NOTE:

Models with standard brakes shown, models with high performance brakes similar.

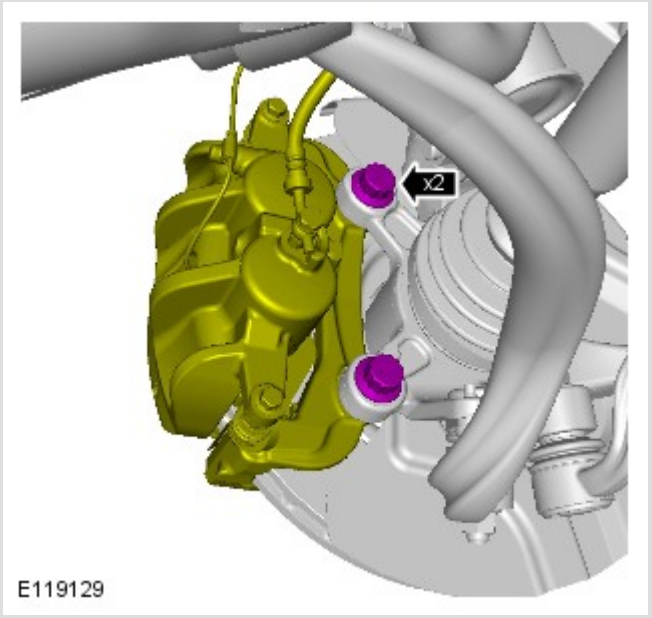

Release the brake caliper and tie aside.

4.

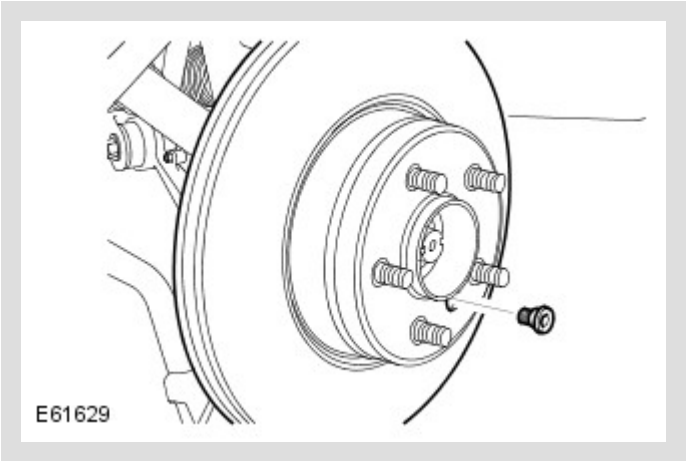

Remove the front brake disc.

Remove the Allen screw.

5. Thoroughly clean the hub mounting face.

6.

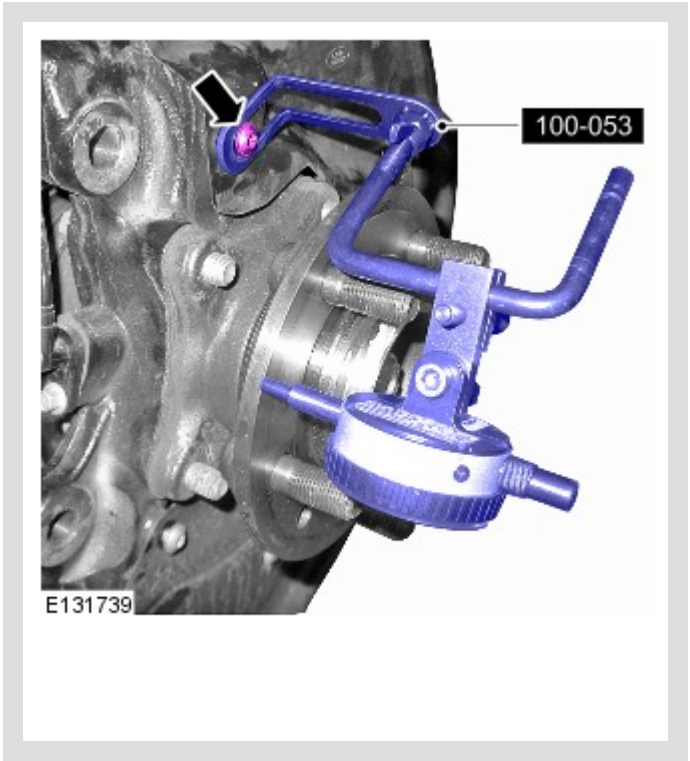

Using special tool (100-053) mount a Dial Test Indicator (DTI) to and secure to the backplate using the upper backplate fixing.

7.

CAUTION:

Make sure the DTI is positioned clear of the wheel studs.

Position the DTI probe on the outer edge of the hub face.

8. Zero the DTI and rotate the hub one complete revolution to measure hub runout.

   The hub runout limit is 0.0135 mm.

9. **NOTE:**

   If the hub runout exceeds the limit replace the hub.

   For additional information, refer to: Front Wheel Bearing and Wheel Hub (204-01, Removal and Installation).

10. Remove the DTI.

11. Install the brake disc.

    Tighten the Torx screw to 35 Nm (26 lb.ft).

12. Install the brake caliper and tighten the bolts. TORQUE: 275 Nm

13. Install the road wheel and tighten nuts to 140Nm (103 lb-ft).

14. Repeat the above procedure on the opposite side.

15. Depress the brake pedal several times to set brake pads.

16. Lower the vehicle.

SUSPENSION SYSTEM - GENERAL INFORMATION

DIAGNOSIS AND TESTING

PRINCIPLES OF OPERATION

For a detailed description of the suspension system and operation, refer to the relevant description and operation section of the workshop manual. REFER to:

Front Suspension (204-01 Front Suspension, Description and Operation),
Rear Suspension (204-02 Rear Suspension, Description and Operation).

INSPECTION AND VERIFICATION

WARNING:

Before carrying out a road test, make sure the vehicle is safe to do so. Failure to follow this instruction may result in personal injury

CAUTION:

Diagnosis by substitution from a donor vehicle is **NOT** acceptable. Substitution of control modules does not guarantee confirmation of a fault and may also cause additional faults in the vehicle being checked and/or the donor vehicle

NOTE:

Check and rectify basic faults before beginning diagnostic routines involving pinpoint tests

1. Gather as much information from the driver as possible and verify the customer concern by carrying out a road test, as closely as possible reproducing the conditions under which the fault occurs

1. Visually inspect for obvious signs of mechanical damage

Visual Inspection



MECHANICAL
■ Tire pressures ■ Damaged wheels or tires ■ Wheel bearing(s) ■ Loose or damaged front or rear suspension components ■ Loose, damaged or missing suspension fastener(s) ■ Damaged or leaking air suspension components ■ Worn or damaged suspension bushing(s) ■ Loose, worn or damaged steering system components ■ Damaged axle components ■ Damaged chassis

1. If an obvious cause for an observed or reported condition is found, correct the cause (if possible) before proceeding to the symptom chart

1. If the cause is not visually evident, verify the symptom and refer to the symptom chart, alternatively check for diagnostic trouble codes (DTCs) and refer to the DTC index

SYMPTOM CHART

SYMPTOM	POSSIBLE CAUSES	ACTION
Crabbing	■ Incorrect rear thrust angle	■ Check the rear alignment

	■ Front or rear suspension components	■ Check the front and rear suspension for signs of damage or wear
Drift/pull/wander	■ Tire pressures ■ Uneven tire wear ■ Damaged steering components ■ Wheel alignment ■ Brake drag ■ Unevenly loaded or overloaded vehicle	■ Check and adjust the tire pressures (see visual inspection) ■ Check for uneven tire wear, investigate the cause and rectify as necessary ■ Check the steering for wear/damage ■ Check and adjust the wheel alignment as necessary ■ Check for binding brakes, rectify as necessary ■ Advise the driver of the load issues
Front bottoming or riding low	■ Damaged suspension components ■ Air spring fault	■ Check the suspension components for damage ■ Check the dynamic suspension
Uneven tire wear	■ Incorrect tire pressure (rapid center rib or inner and outer edge wear) ■ Incorrect front or rear toe (rapid inner or outer edge wear) ■ Incorrect camber (rapid inner or outer edge wear) ■ Tires out of balance (tires cupped or dished)	■ Check and adjust the tire pressures (see visual inspection) ■ Check and adjust the wheel alignment as necessary ■ Balance the wheels and tires as necessary
Harsh ride	■ Damaged suspension components ■ Air spring fault	■ Check the suspension components for damage ■ Check the dynamic suspension

Shimmy or wheel tramp	■ Wheels/tires ■ Loose wheel nut(s) ■ Loose front suspension fasteners ■ Front wheel bearing(s) fault ■ Worn or damaged suspension component bushing ■ Loose, worn or damaged ball joint (s) ■ Loose, worn or damaged steering components ■ Front wheel alignment	■ Check the wheels and tires for condition and balance ■ Check and tighten the wheel nuts and suspension fasteners to specification ■ Check the front wheel bearings, suspension bushings, ball joints and steering components for wear or damage ■ Check and adjust the wheel alignment as necessary
Poor return ability of the steering (self-centering)	■ Steering column ■ Ball joints ■ Steering components	■ Check the steering column universal joints, etc ■ Check the ball joints and other steering components
Sway or roll	■ Loose front or rear stabilizer bar ■ Worn lower suspension arm stabilizer bar insulators ■ Air spring fault	■ Check the stabilizer bar security and condition ■ Rectify as necessary ■ Check the function of the active stabilization system (where installed) ■ Check the air springs
Vehicle leans to one side	■ Front or rear suspension components ■ Air spring fault	■ Check the front and rear suspension ■ Check the air springs

Evidence of fluid on rear shock absorber	■ Fluid on shock absorber from an external source ■ Fluid leaking from shock absorber	■ Shock absorber not faulty, do not renew ■ GO to Pinpoint Test **A.**

PINPOINT TESTS

NOTES:

PINPOINT TEST A : SHOCK ABSORBER FLUID LEAK DIAGNOSIS	
TEST CONDITIONS	DETAILS/RESULTS/ACTIONS
A1: ASSESS LEAK	

- Residual oil left over from the shock absorber assembly process may create oil staining on the shock absorber tube. This will not affect the function of the shock absorber.
- Slight seepage is considered normal.

1 Assess the extent of the oil leakage

Is the leakage serious enough to indicate that the shock absorber seal has failed?

Yes

GO to Pinpoint Test B.

No

Shock absorber not faulty, do not renew

PINPOINT TEST B : CONFIRM LEAK	
TEST CONDITIONS	**DETAILS/RESULTS/ACTIONS**
B1: ROAD TEST	
	1 Clean all traces of oil from the shock absorber
	2 Drive the vehicle over a speed bump or similar ten times
	Is any fluid visible on the outside of the shock absorber? **Yes** Install a new shock absorber **No** Shock absorber not faulty, do not renew

DTC INDEX

For a list of diagnostic trouble codes (DTCs) that could be logged on this vehicle, please refer to Section 100-00. REFER to: (100-00 General Information)

Diagnostic Trouble Code (DTC) Index - DTC: Module Name: Air Suspension Control Module (Description and Operation),
Diagnostic Trouble Code (DTC) Index - DTC: Module Name: Adaptive Damping Control Module (Description and Operation),
Diagnostic Trouble Code (DTC) Index - DTC: Module Name: Terrain Response Control Module (Description and Operation).

FRONT SUSPENSION

SPECIFICATIONS

Torque Specifications

DESCRIPTION	NM	LB-FT
Stabilizer bar link nuts +	100	74
Stabilizer bar clamp nuts	56	41
Subframe to body bolts +		
Stage 1 - All bolts	165	122
Stage 2 - Rear bolts	Then a further 90 degrees	Then a further 90 degrees
Subframe to front crossmember bolt	132	97
Rear lower arm ball joint bolts +	60	44
Rear lower arm ball joint nut	80	59
Front lower arm ball joint nut	80	59
Rear lower arm to subframe bolt +		
Stage 1	165	121
Stage 2	Then a further 90 degrees	Then a further 90 degrees
Rear lower arm to subframe bolt +		
Stage 1	165	121
Stage 2	Then a further 90 degrees	Then a further 90 degrees
	250	184

DESCRIPTION	NM	LB-FT
Wheel knuckle to shock absorber bolts		
Shock absorber and spring assembly top mounting nuts	56	41
Mass damper bolts #	9	7

 # Vehicles with active damping suspension

+ New nut/bolts must be installed

FRONT SUSPENSION

FRONT LOWER ARM BUSHING (G928132)

REMOVAL AND INSTALLATION

60.35.26	BUSHING - SUSPENSION LOWER ARM - PAIR - RENEW	ALL DERIVATIVES	1	USED WITHINS	

SPECIAL TOOL(S)

	**204-507** Remover/installer

REMOVAL

NOTE:

bushes must be replaced as a pair

1. Raise and support the vehicle.

2. Remove the wheels and tires.

3. 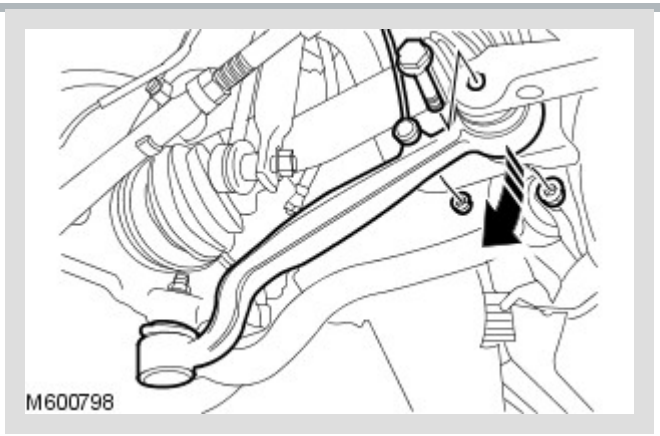

LH front: Release the suspension height sensor link.

4. Release the LH front lower arm.

Remove and discard the nut and bolt.

5.

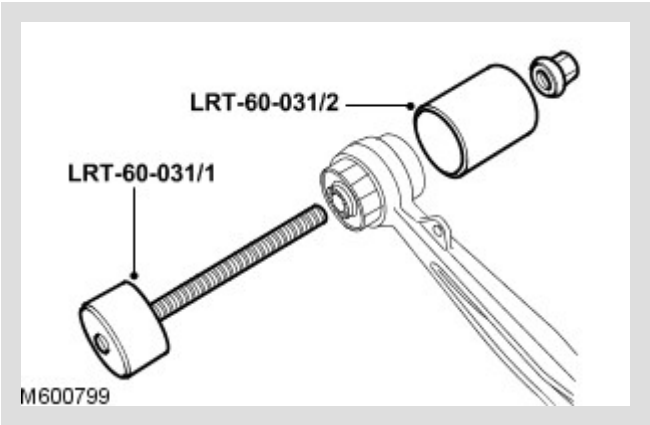

Using the special tools, remove the front lower arm bushes.

INSTALLATION

1.

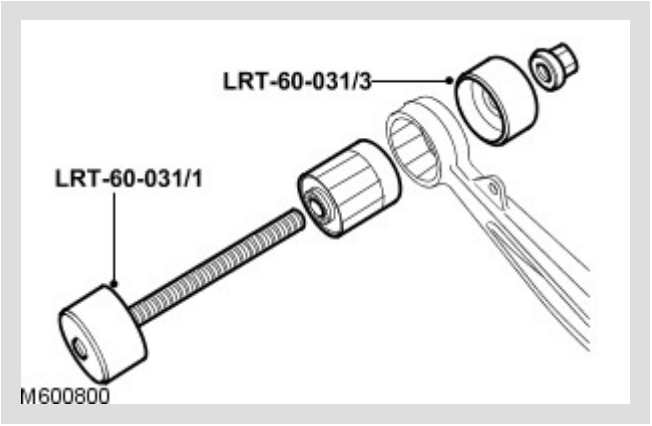

Using the special tools, install the front lower arm bushes.

2.

CAUTIONS:

- Make sure that a new nut and bolt is installed.
- Only tighten the nuts and bolts when the suspension is in the normal drive position.

Secure the LH front lower arm.

Tighten the nut and bolt to 165 Nm (121 lb.ft). plus a further 90 degrees.

3. LH front: Secure the suspension height sensor link.

4. Repeat the above procedure for the RH side.

5. Install the wheels and tires.

   Tighten the wheel nuts to 140 Nm (103 lb.ft).

6. Check, and if necessary, adjust the wheel alignment.
   For additional information, refer to: Four-Wheel Alignment (204-00 Suspension System - General Information, General Procedures).

FRONT SUSPENSION

FRONT LOWER ARM (G928131)

REMOVAL AND INSTALLATION

60.35.03	SUSPENSION ARM - LOWER FRONT - RENEW	ALL DERIVATIVES	0.3	USED WITHINS	

SPECIAL TOOL(S)



205-754(LRT-54-027)

Ball joint separator

REMOVAL

NOTE:

LH illustration shown, RH is similar.

1. **WARNING:**

   Do not work on or under a vehicle supported only by a jack. Always support the vehicle on safety stands.

   Raise and support the vehicle.

2. Remove the wheel and tire.

3. 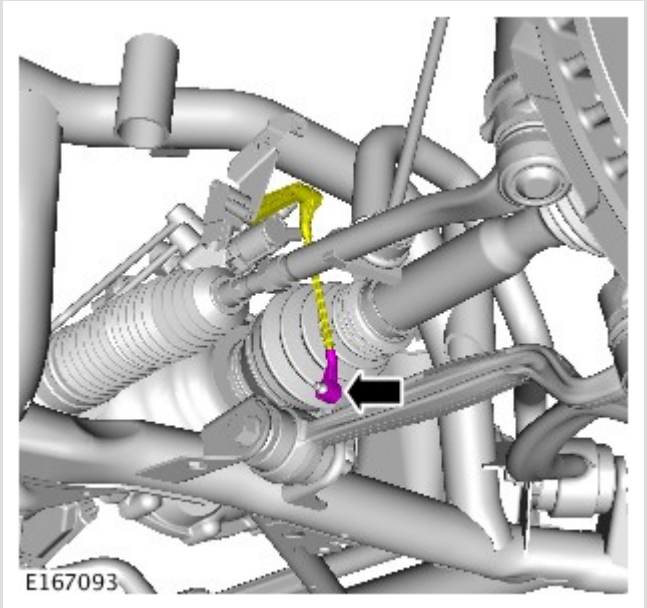

   Release the suspension height sensor link.

4.

△ NOTE:

Remove and discard the nut and bolt.

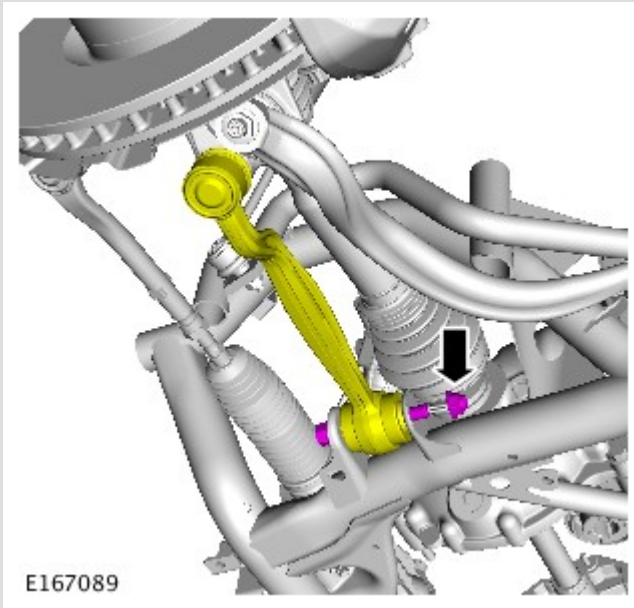

Release the front lower arm from the subframe.

5.

△ NOTE:

Remove and discard the nut.

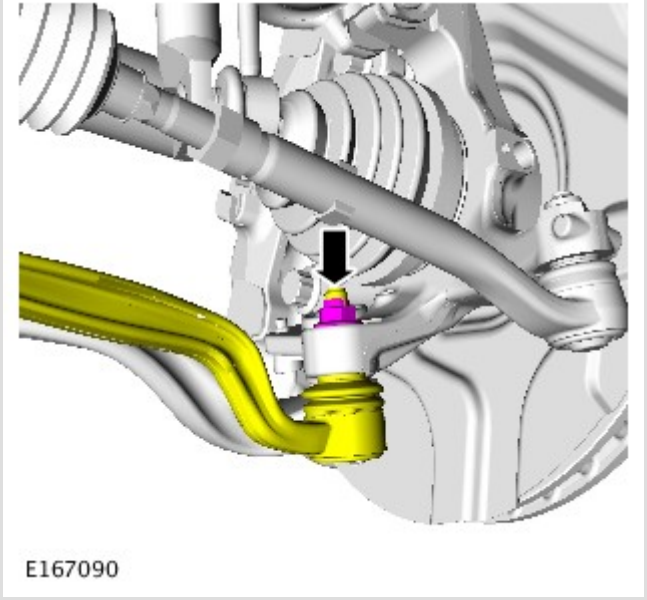

6.

CAUTION:

Make sure the ball joint seal is not damaged. A damaged seal will lead to the premature failure of the joint.

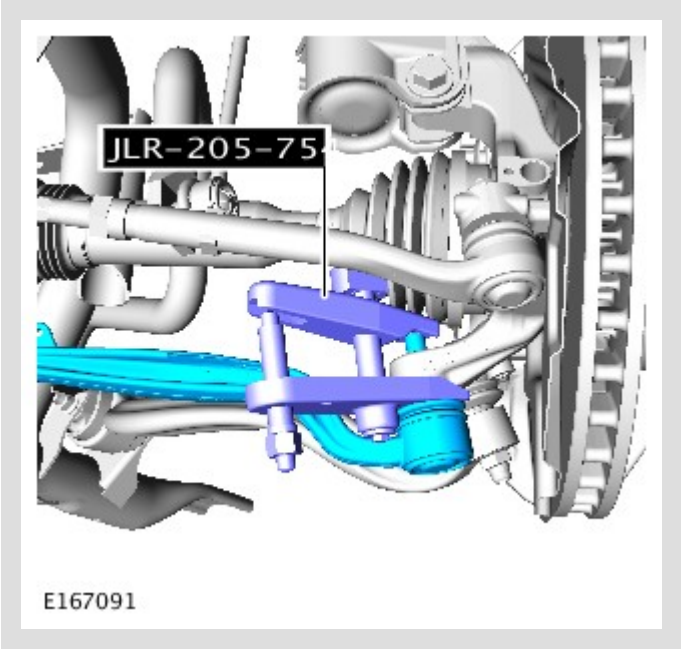

Using the special tool, release the front lower arm from the wheel knuckle.

7.

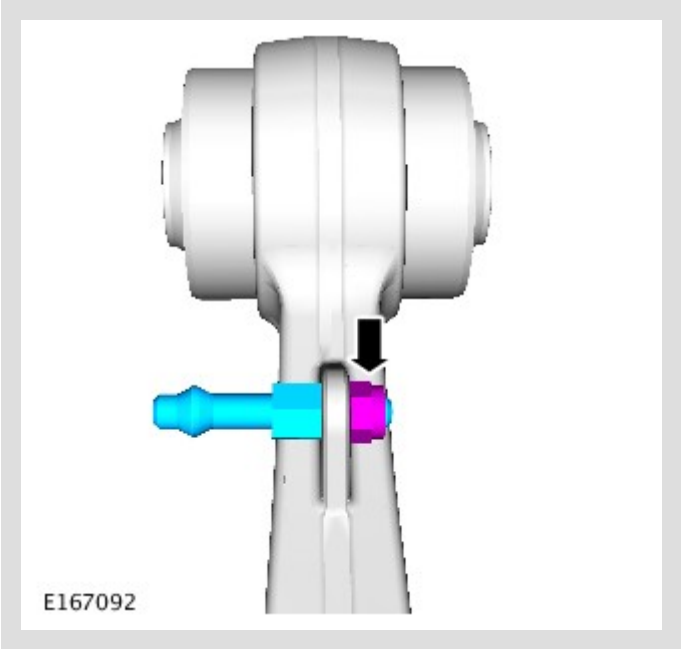

INSTALLATION

1.

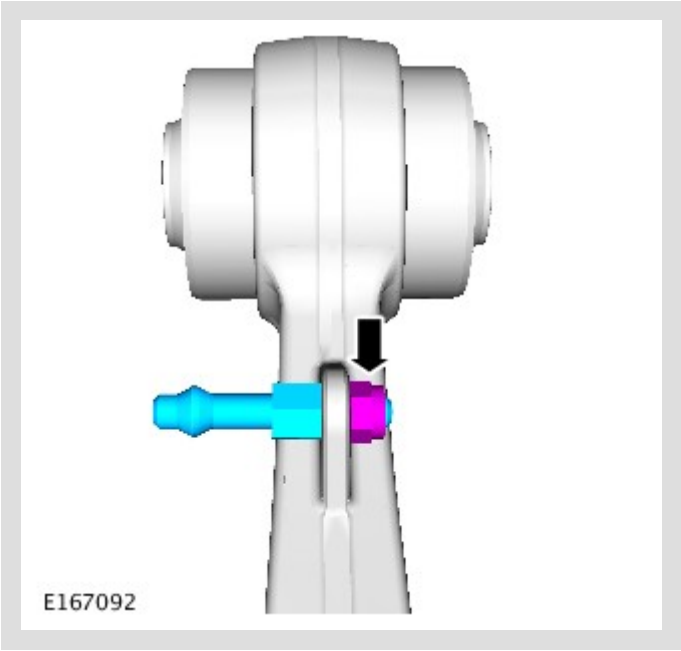

2.

CAUTION:

Make sure that a new nut is installed.

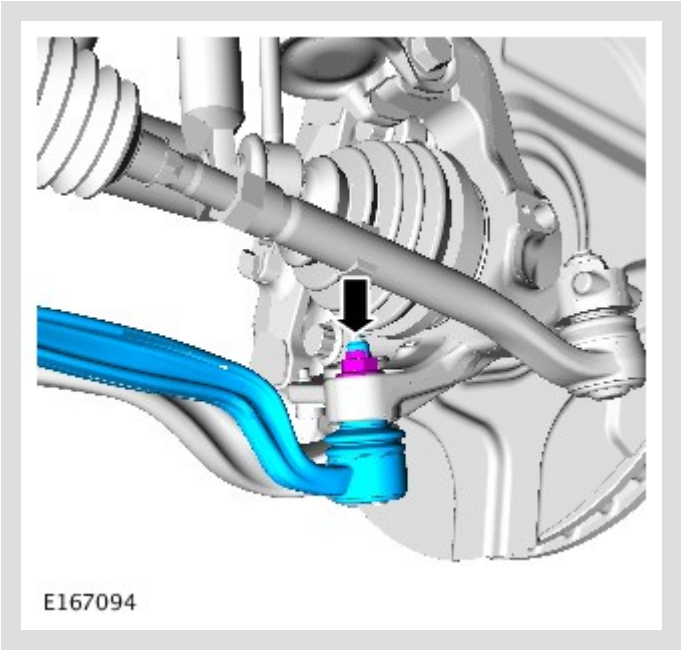

Secure the wheel knuckle to the front lower arm.

Tighten the nut to 80 Nm (59 lb.ft).

3.

CAUTIONS:

- Make sure that a new nut and bolt is installed.
- Only tighten the nuts and bolts when the suspension is in the normal drive position.

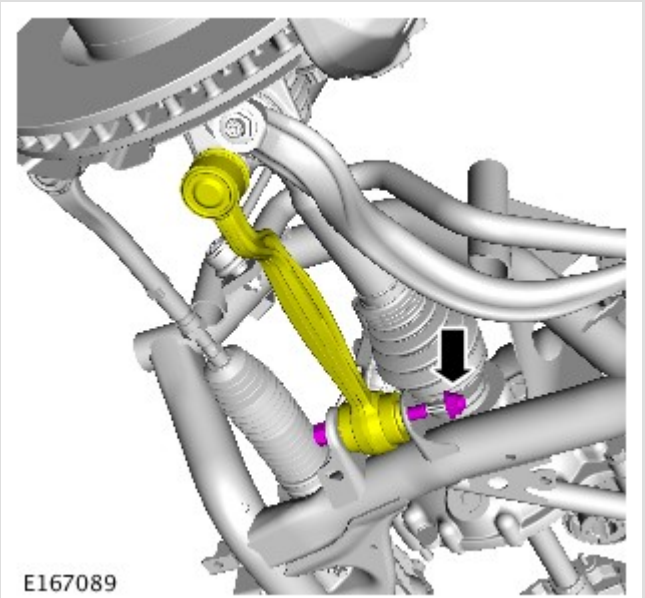

Install the front lower arm.

Tighten the nut and bolt to 165 Nm (121 lb.ft). plus a further 90 degrees.

4.

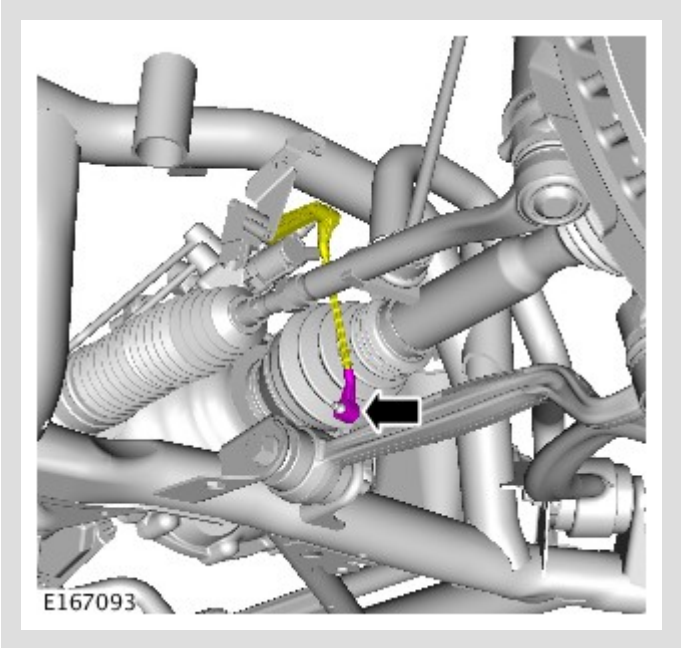

Secure the suspension height sensor link.

5. Install the wheel and tire.

   Tighten the wheel nuts to 140 Nm (103 lb.ft).

6. Calibrate the suspension ride height.

7. Check, and if necessary, adjust the wheel alignment.
   For additional information, refer to: Four-Wheel Alignment (204-00 Suspension System - General Information, General Procedures).

FRONT SUSPENSION

FRONT STABILIZER BAR

(G1226571)

REMOVAL AND INSTALLATION

60.10.01	STABILIZER BAR - RENEW	ALL DERIVATIVES	1.6	USED WITHINS	+

REMOVAL

1. **WARNING:**

   Make sure to support the vehicle with axle stands.

   Raise the front of the vehicle.

2. Remove the front wheels and tires.

3. Remove the engine undershield.
   For additional information, refer to: Engine Undershield (501-02 Front End Body Panels, Removal and Installation).

4.

NOTE:

RH side only.

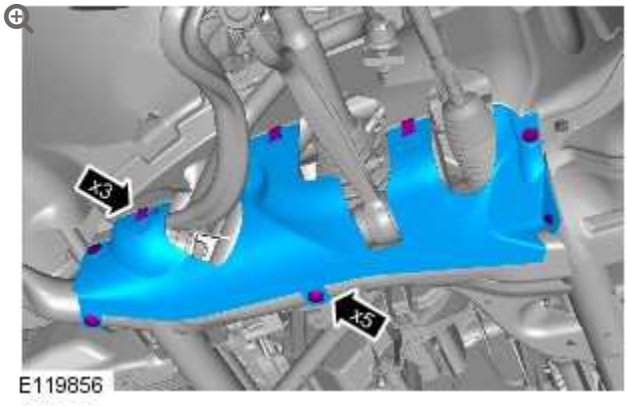

Remove the fender splash shield lower extension panel.

5.

NOTE:

RH side only.

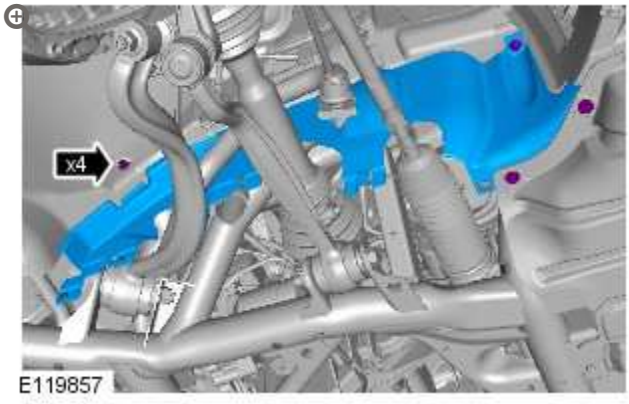

Remove the fender splash shield upper extension panel.

6.

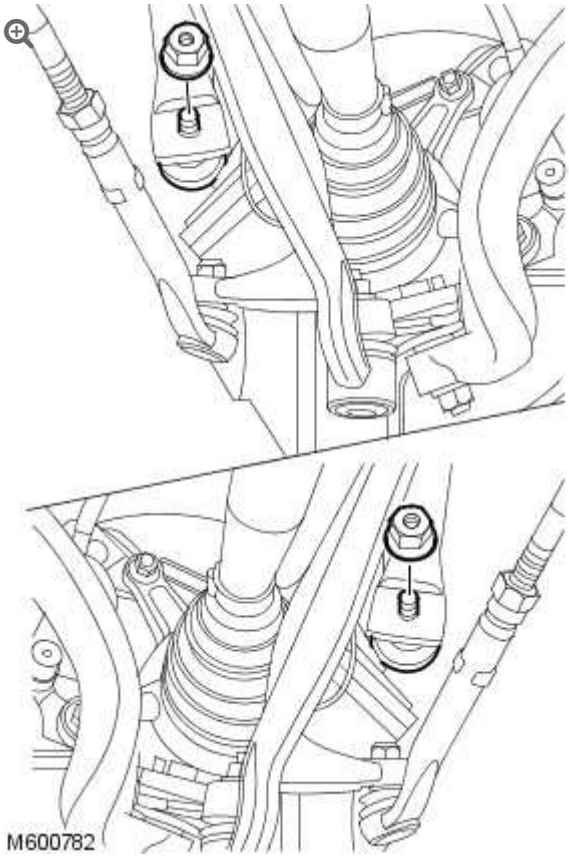

Release the stabilizer bar links from the stabilizer bar.

- Remove the 2 nuts.

7.

NOTE:

RH illustration shown, LH is similar.

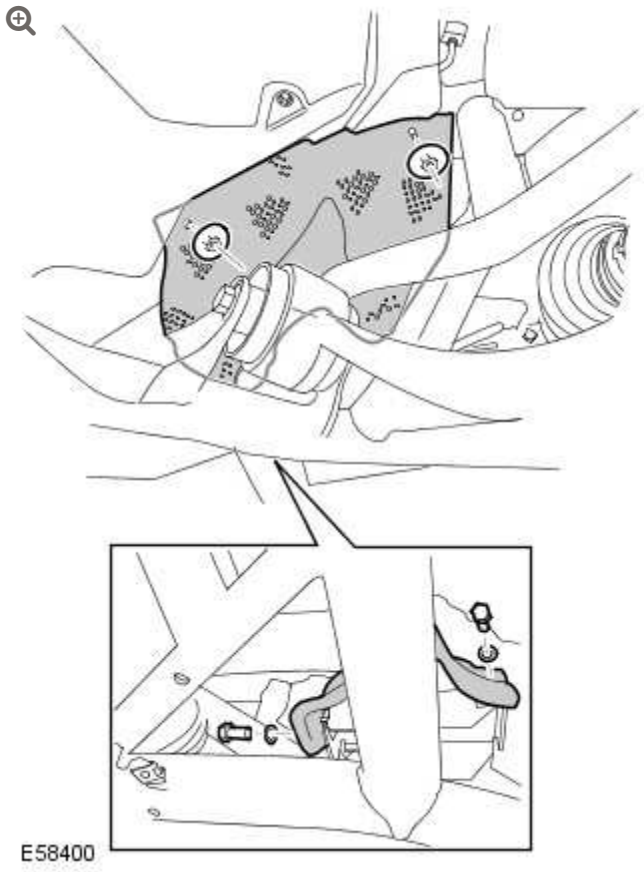

Remove the stabilizer bar RH heatshield.

- Remove the 2 nuts and 2 bolts.

8. Remove the LH heatshield retaining bolts.
   - Remove the 2 nuts and 2 bolts.

9. Support the front subframe.

10.

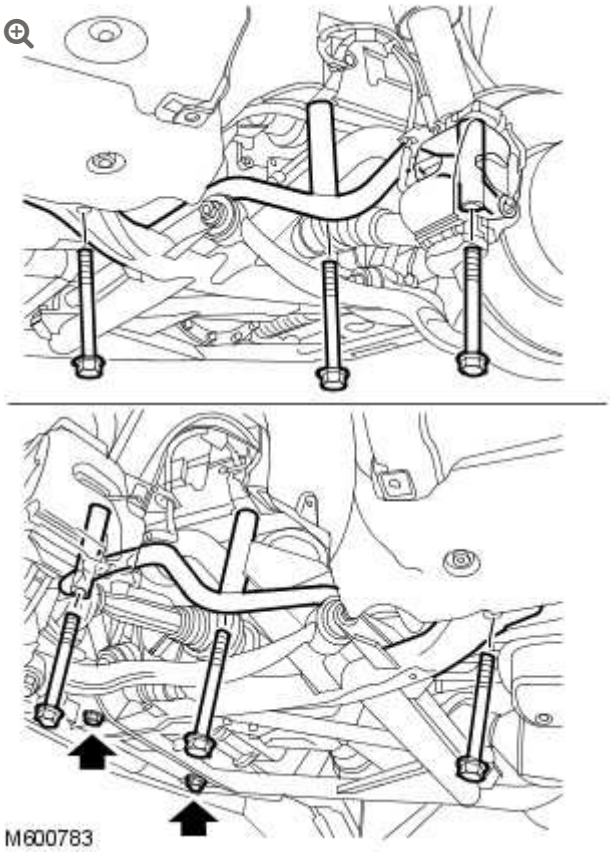

Lower the rear of the front subframe.

- Loosen the 2 bolts.
- Remove and discard the 6 bolts.

11.

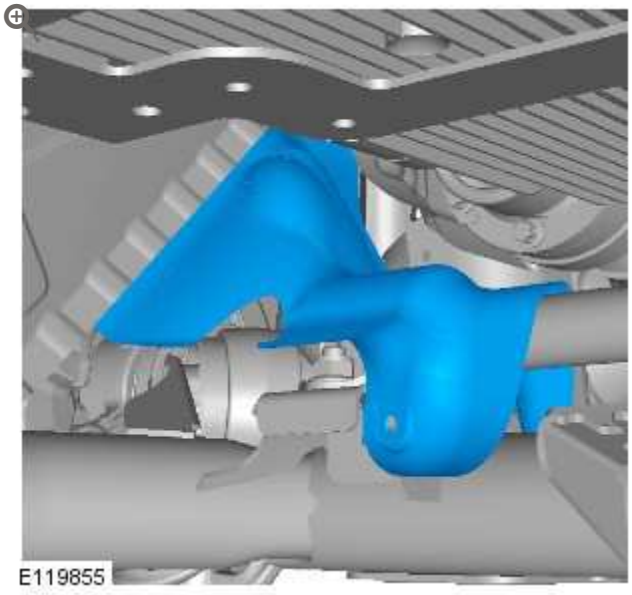

Remove the stabilizer bar LH heatshield.

12.

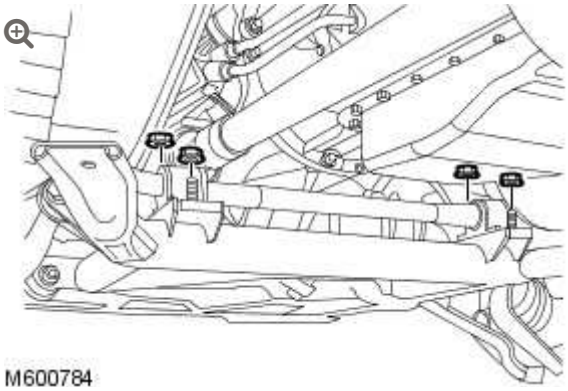

M600784

Release the front stabilizer bar.

- Remove the 4 nuts.

13.

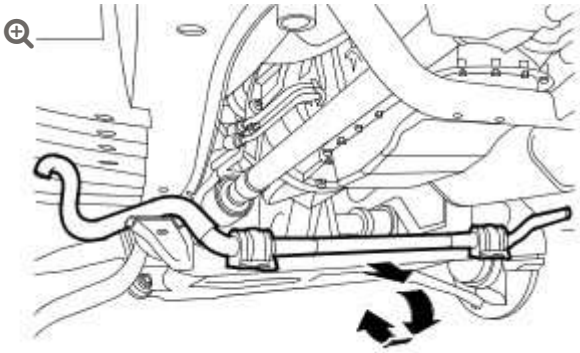

M600785

Remove the front stabilizer bar.

INSTALLATION

1. Install the front stabilizer bar.
   - Locate the front stabilizer bar clamps.
   - Tighten the front stabilizer bar clamp nuts.
   - Stage 1: 56 Nm (41 lbft).
   - Stage 2: 56 Nm (41 lbft).

2.

NOTE:

Sub-frame shown removed for clarity.

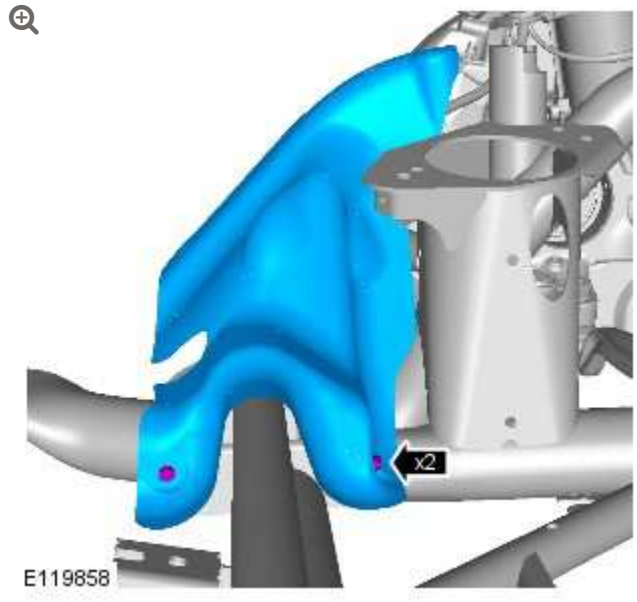

Install the stabilizer bar LH heatshield.

- Fit the bolts securing the heatshield to the subframe but do not fully tighten at this stage.

3. Secure the front subframe.
   - Tighten the new bolts to 165 Nm (122 lb.ft).
   - Tighten the 2 rear bolts a further 90 degrees.
   - Tighten the two front subframe bolts to 133 Nm (98 lb.ft).
4. Secure the stabilizer bar links.
   - Tighten the nuts to 100 Nm (74 lb.ft).
5.

NOTE:

RHD illustration shown, LHD is similar.

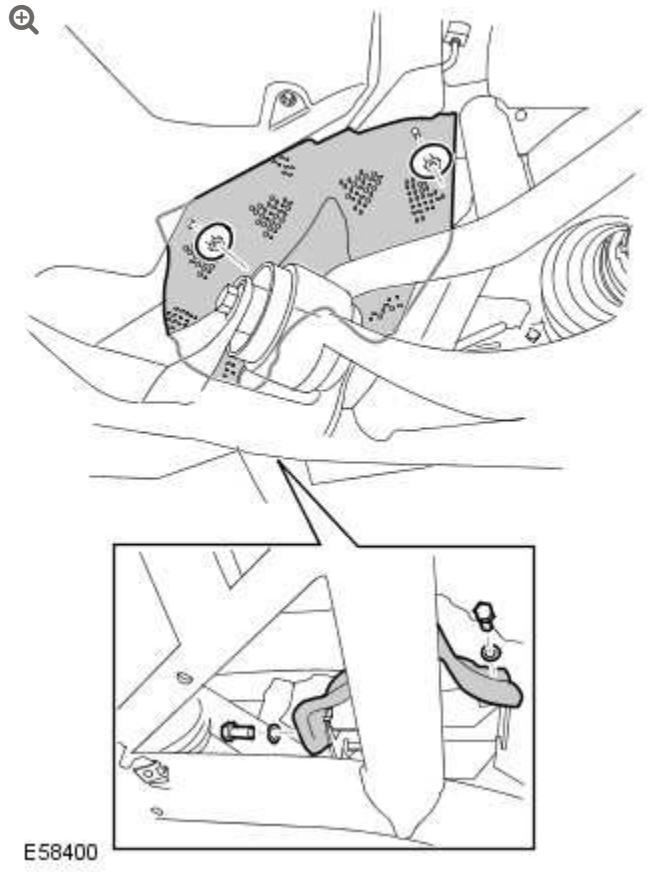

Install the stabilizer bar RH heatshield.

- Tighten the nuts to 8 Nm (6 lb.ft).
- Tighten the bolts to 8 Nm (6 lb.ft).

6. Install the stabilizer bar LH heatshield retaining bolts.
   - Tighten the bolts to 8 Nm (6 lb.ft).

7. **NOTE:**

   RH side only.

Install the fender splash shield upper extension panel.

- Tighten the Torx bolts to 8 Nm (6 lb.ft).

8. **NOTE:**

   RH side only.

   Install the fender splash shield lower extension panel.

9. Install the engine undershield.
   For additional information, refer to: Engine Undershield (501-02 Front End Body Panels, Removal and Installation).

10. Install the front wheels and tires.
    - Tighten the wheel nuts to 140 Nm (103 lb.ft).

11. Check, and if necessary, adjust the wheel alignment.
    For additional information, refer to: Four-Wheel Alignment (204-00 Suspension System - General Information, General Procedures).

FRONT SUSPENSION

FRONT STABILIZER BAR LINK (G513964)

REMOVAL AND INSTALLATION

60.10.02	LINK - STABILIZER BAR - ONE - RENEW	ALL DERIVATIVES	0.3	USED WITHINS	+

REMOVAL

1. **WARNING:**

   Do not work on or under a vehicle supported only by a jack. Always support the vehicle on safety stands.

   Raise the front of the vehicle.

2. Remove the wheel and tire.

3.

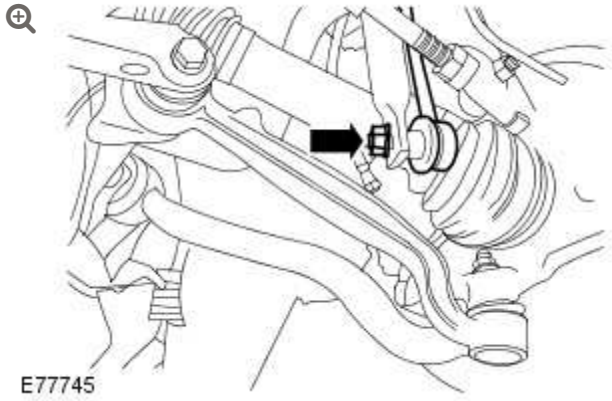

Release the stabilizer bar link.

- Remove the nut.

4.

CAUTION:

Note the fitted position of the special washer.

NOTE:

Discard the nuts.

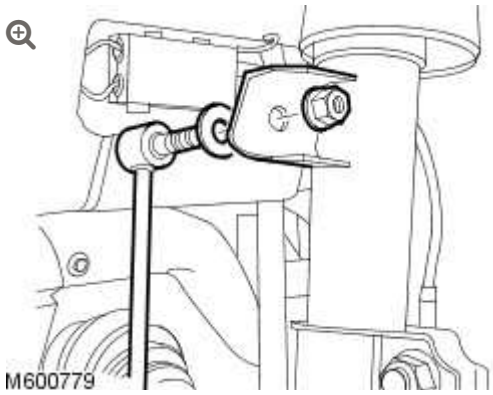

Remove the stabilizer bar link.

- Remove the nut.
- Collect the washer.

INSTALLATION

1. **NOTE:**

   Install new nuts.

   Install the stabilizer bar link.

   - Install the special washer.
   - Tighten the nuts to 100 Nm (74 lb.ft).

2. Install the wheel and tire.
   - Tighten the wheel nuts to 140 Nm (103 lb.ft).

2012.0 RANGE ROVER (LM), 204-01

FRONT SUSPENSION

DIAGNOSIS AND TESTING

For additional information.

REFER to: Suspension System (204-00, Diagnosis and Testing).

FRONT SUSPENSION

DESCRIPTION AND OPERATION

FRONT SUSPENSION

Front Suspension Components

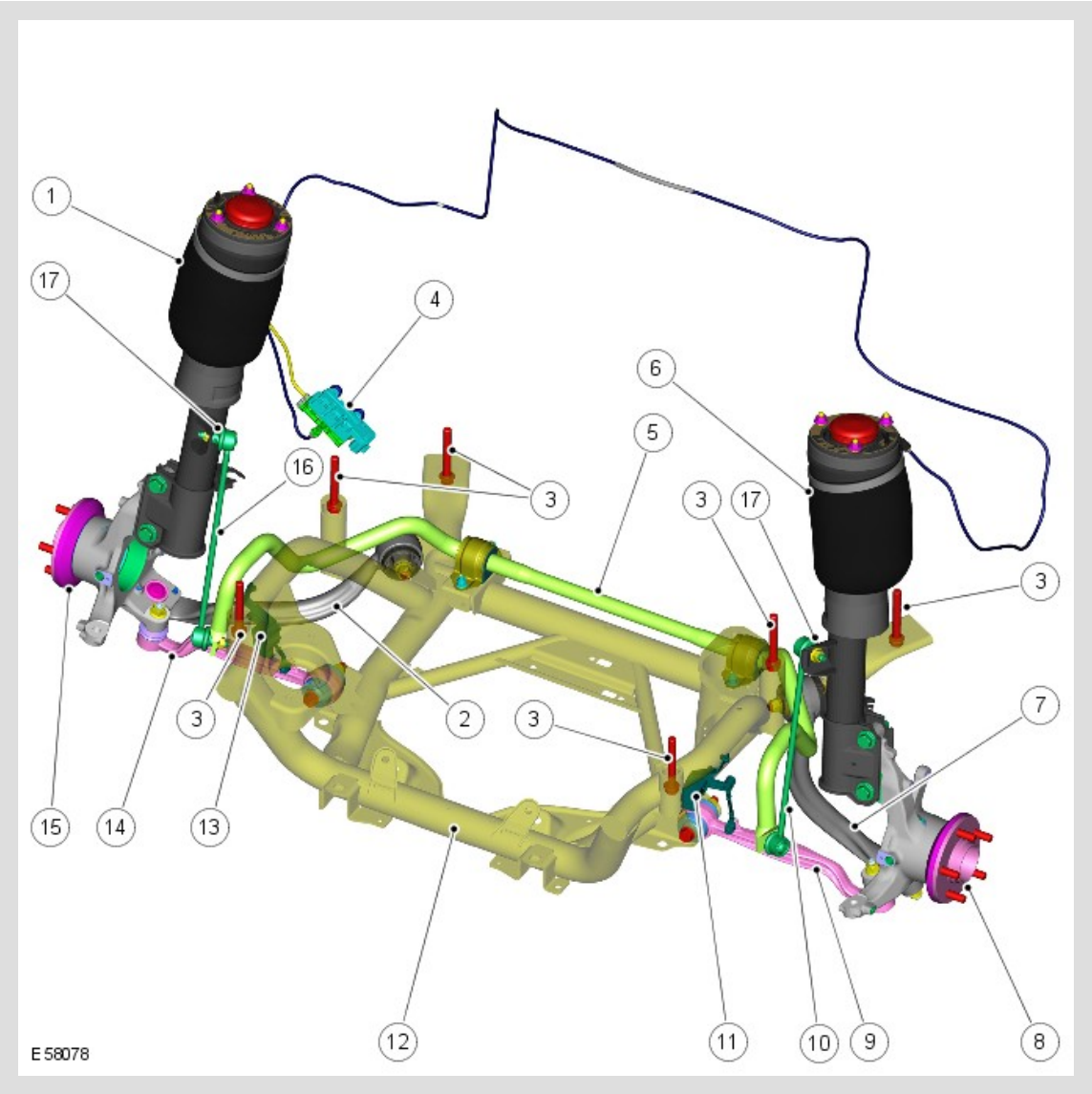

ITEM	DESCRIPTION
1	right-hand (RH) front damper assembly

2	RH tie rod
3	Subframe body mounts
4	Front cross link valve
5	Stabilizer bar
6	left-hand (LH) front damper assembly
7	LH tie rod
8	LH front hub assembly
9	LH lower arm
10	LH stabilizer bar link
11	LH front height sensor
12	Front subframe
13	RH front height sensor (hidden)
14	RH lower arm
15	RH stabilizer bar link
16	RH front hub assembly
17	Hardened washer (2 off)

The front suspension on vehicles from 2007 model year features a common tubular stabilizer bar across all engine variants.

The suspension arms have been designed for maximum ground clearance. Suspension geometry can be adjusted via the strut top mount for camber and on the steering rack track rod ends for toe-in.

The following wheel travels are shown for on road and off-road vehicle operation. The difference between the two operating conditions is a result of operation of the air suspension front cross-link valve. When the cross-link valve is opened, the suspension travel is as given for off-road wheel travel. When the cross-link valve is closed the suspension travel given for on road applies.

The off road mode wheel travel is:

- 175 mm bump
- 95 mm rebound
- This gives a total of 270 mm off road suspension travel.

The on road standard wheel travel is:

- 115 mm bump
- 155 mm rebound
- This gives a total of 270 mm on road suspension travel.

NOTE:

Overall wheel travel stated above will still be achieved when both wheels are moving in parallel together.

The front suspension comprises:

- Two air spring damping struts
- Subframe
- Stabilizer bar
- Stabilizer bar links
- Suspension arms
- Two hub assemblies.

STRUTS

The front suspension struts are a MacPherson twin tube design with the conventional coil spring replaced by an air spring. The lower end of the strut is connected to the front hub assembly with two bolts. The upper top mount is attached to the inner fender with three studs and nuts.

The top mount has a bearing installed which reduces the force required on the steering when the strut rotates. A paper gasket is fitted on the underside of the inner fender, between the inner fender and the top mount. The gasket prevents the ingress of dirt and moisture into the bearing. When the strut is removed, this gasket must be replaced with a new item to maintain the performance of the bearing and care must be taken to ensure that the gasket is correctly positioned.

The damper functions by restricting the flow of hydraulic fluid through internal galleries within the damper. A damper rod moves axially within the damper. As the rod moves, its movement is limited by the flow of fluid

through the galleries thus providing damping of undulations in the terrain. The damper rod is sealed at its exit point from the damper body to maintain fluid within the unit and to prevent the ingress of dirt and moisture. The seal also acts as a wiper to keep the rod outer diameter clean.

> **NOTE:**
>
> The dampers fitted to TDV8 vehicles differ to the dampers fitted to petrol vehicles to compensate for the extra weight and handling characteristics of the vehicle.

The air spring is fitted on the upper part of the strut. Within the strut module the air spring elements comprise a top plate assembly, an air bag and a base piston. The air bag is attached to the top plate and the piston with a crimped ring. The air bag is made from a flexible rubber material which allows the bag to expand with air pressure and deform under load. On the side of the top cap is a connector which allows for the attachment of the air hose from the cross-link valve. The piston is made from plastic and is shaped to allow the air bag to roll over its outer diameter.

TDV8 and supercharged vehicles also feature mass attached to the top mount. The mass has no function with the vehicle suspension but is fitted to improve NVH produced by the braking system.

SUBFRAME

The subframe is fabricated from steel tubing to provide a robust platform for the mounting of the suspension and engine. The subframe is attached to the vehicle body via six mountings.

The subframe fabrication provides accurate location for the suspension components and the steering rack. Additional brackets allow for the attachment of the height sensors and the engine mountings. The stabilizer

bar is attached across the rear of the subframe and is mounted in flexible bushes which are secured with 'D' shaped clamp plates.

STABILIZER BAR AND LINKS

The stabilizer bar is fabricated from 31 mm diameter, spring steel tube with a 5.5 mm wall thickness. The stabilizer bar operates, via a pair of links, from a bracket mounted on each strut.

The stabilizer bar is attached to the rear of the subframe with two bushes which are bonded to the bar and cannot be removed. Clamp plates are pressed onto the bushes and must not be removed. The stabilizer bar is secured to the subframe with the clamp plates which are located on studs on the subframe and secured with nuts.

Each end of the stabilizer bar is attached to a bracket on each strut via a stabilizer link. This arrangement allows the stabilizer bar to act on a 1:1 ratio with the wheel travel providing maximum stabilizer bar effectiveness. A hardened washer is fitted between the ball joint and the strut mounting plate. The hardened washer prevents the ball joint damaging the bracket, which could lead to loosening of the torque on the nut. It is important that this washer is in the correct position and the correct, hardened washer is fitted. Failure to fit the washer or using an incorrect washer will result in relaxation of the torque on the self-locking nut and damage will be caused to the stabilizer bar link and the strut.

Each stabilizer link has a ball joint fitting at each end mounted at 90° to the axis of the link. The ball joints improve the response and efficiency of the stabilizer bar. The top ball joint attaches directly to a bracket on the strut and the lower ball joint attaches to a hole in the stabilizer bar. Both ball joints are secured with self-locking nuts.

Each link must be attached to the stabilizer bar with the ball joint on the outside of the bar and the locknut facing inwards. The ball joints on the stabilizer links are not serviceable and if replacement of either is necessary, a new stabilizer link will be required.

SUSPENSION LINKS

The front suspension hub assembly is secured to the subframe via two suspension links:

Lower Arm

Each lower arm is fitted with a bush which is secured with a bolt between two brackets on the subframe. The opposite end of the lower arm is fitted with a tapered ball joint which attaches to the hub assembly. The arm has a bracket on its upper face which provides for attachment of the air suspension height sensor.

Tie Rod

The tie rod is located rearward of the lower arm. The tie rod is fitted with a compliance bush which is secured with a bolt between two brackets on the subframe. The opposite end of the tie rod has a tapered hole which locates on a ball joint which is bolted to the hub assembly.

HUB ASSEMBLY

The hub assembly comprises a swivel hub, drive flange and bearing. A seal and bearing are fitted in the swivel hub and are secured with a circlip. The drive flange has the wheel studs attached to it and locates on the splined drive shaft and is secured with a stake nut.

The forged swivel hub has a vertical boss with two cross holes. This provides location for the strut assembly which is secured with bolts and nuts to the swivel hub. Two additional bosses provide location for the brake calliper.

The lower part of the swivel hub has two threaded holes which allow for the attachment of the ball joint which locates the outer end of the tie rod. A further tapered hole allows for the attachment of the lower arm ball joint.

A hole is machined at 90° to the hub bearing. This hole allows for the fitment of the anti-lock brake system (ABS) wheel speed sensor which is secured with a screw into an adjacent threaded hole. The speed sensor reads off a target which is part of the drive shaft assembly.

FRONT SUSPENSION

FRONT WHEEL BEARING AND WHEEL HUB – VEHICLES WITH: HIGH PERFORMANCE BRAKES

(G1451331)

REMOVAL AND INSTALLATION

SPECIAL TOOL(S)

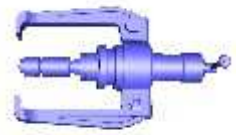

E120295

100-005A

Remover, Puller



204-509-02

Remover, Front and Rear Hub and Bearing



204-509-04

Adapter, Front and Rear Hub and Bearing



204-509-05

Remover, Front and Rear Hub and Bearing



204-509-06

Remover, Front and Rear Hub and Bearing



204-509-10

Adapter, Front and Rear Hub and Bearing



204-509-11

Adapter, Front and Rear Hub and Bearing



204-509-12

Installer, Front and Rear Hub and Bearing



205-310

Remover, Bearing/Gear



307-486

Installer



JLR-204-509-13

Adapter, Front and Rear Hub and Bearing

REMOVAL

NOTE:

RH illustration shown, LH is similar.

1. **WARNING:**

   Make sure to support the vehicle with axle stands.

   Raise and support the vehicle.

2. Remove the wheel and tire.

3. Refer to: Wheel Knuckle - Vehicles With: High Performance Brakes (204-01 Front Suspension, Removal and Installation).

4. 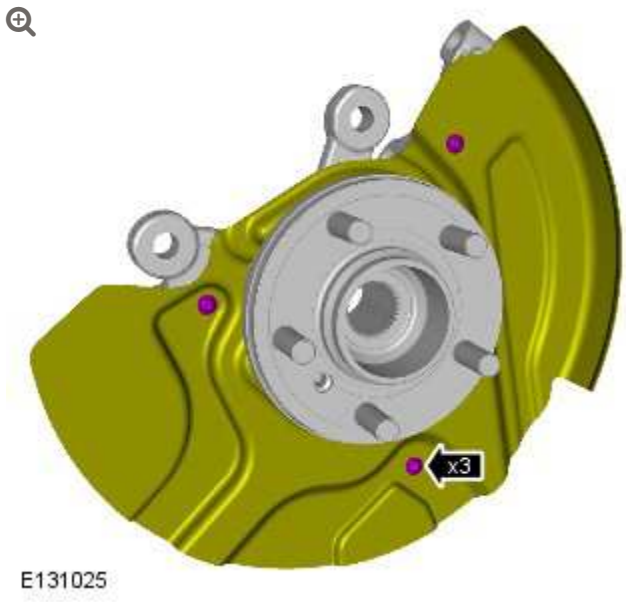

5.

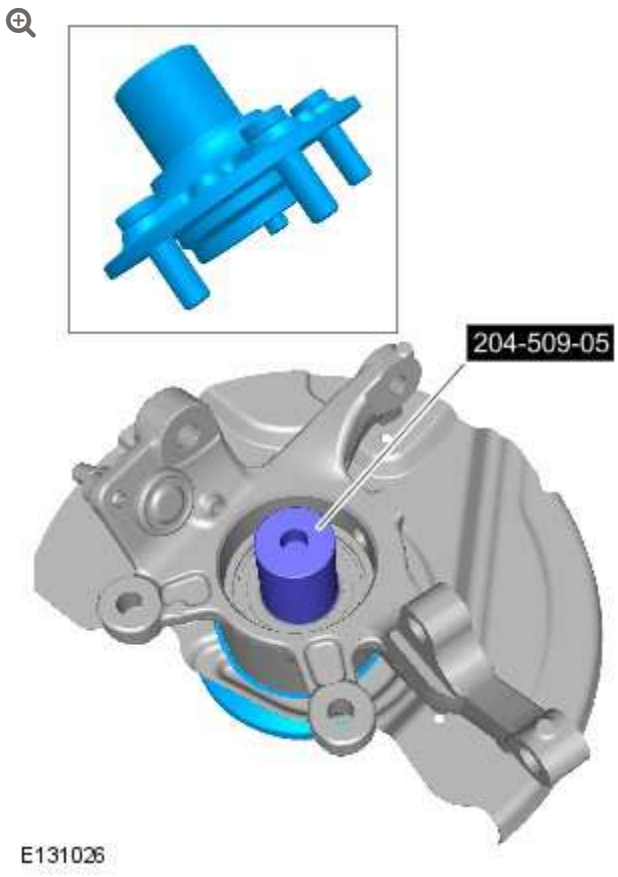

Special Tool(s): 204-509-05

6.

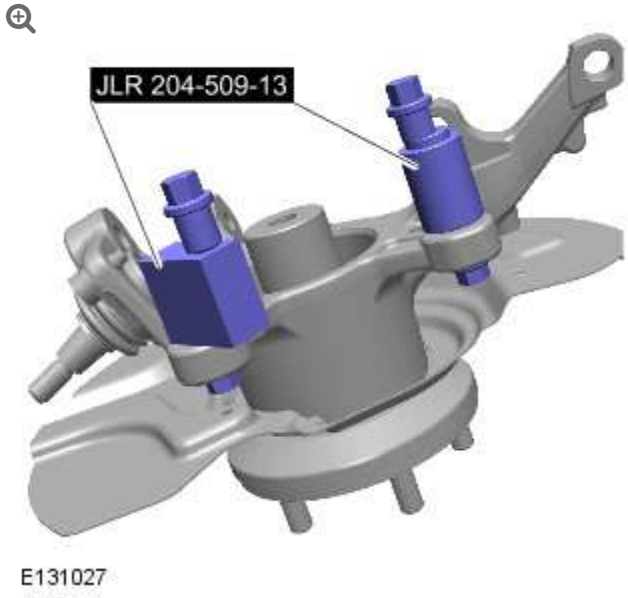

Special Tool(s): JLR-204-509-13

7.

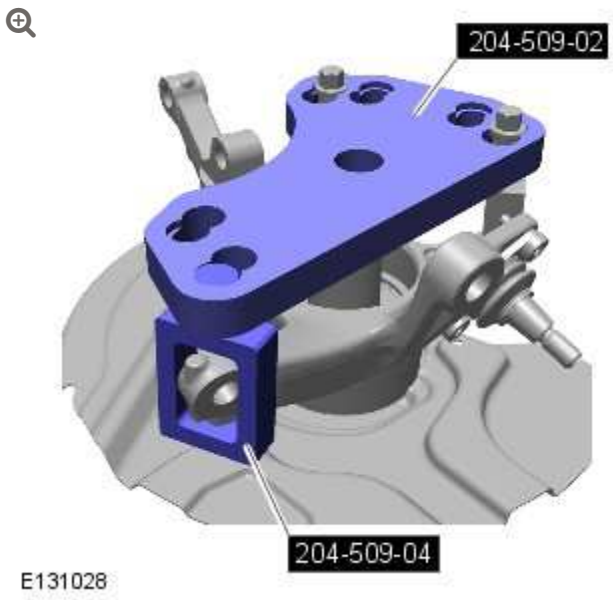

Special Tool(s): 204-509-02, 204-509-04

8.

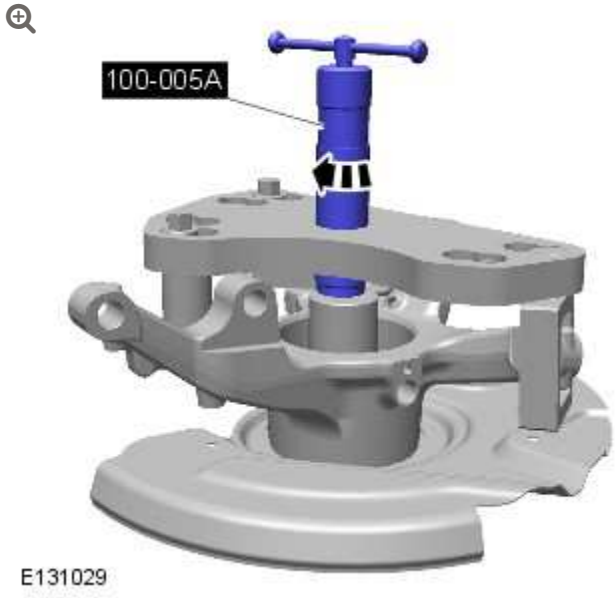

Special Tool(s): 100-005A

9.



E131030

10.

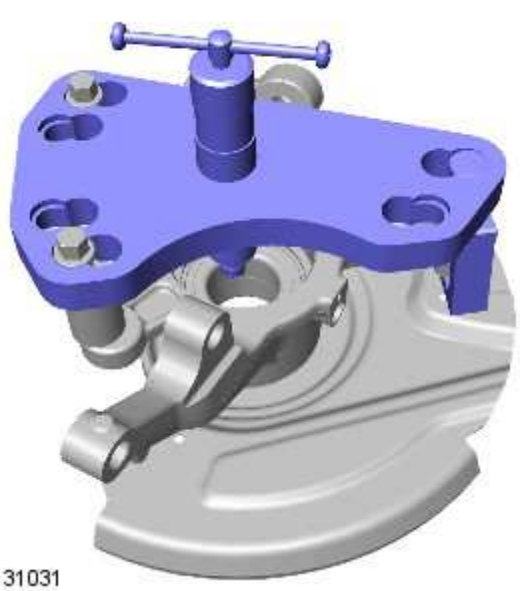

E131031

Remove the special tools.

11.



E131032

12.

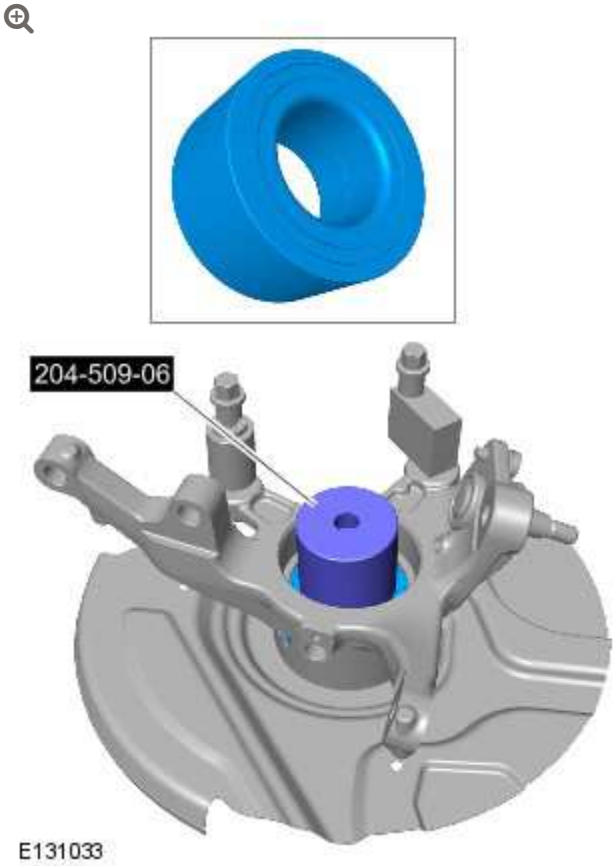

E131033

Special Tool(s): 204-509-06

13.

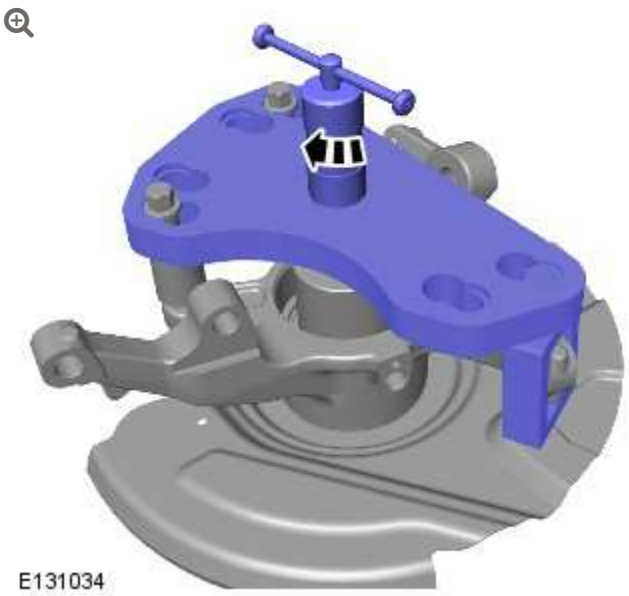
E131034

14.


E131035

15.

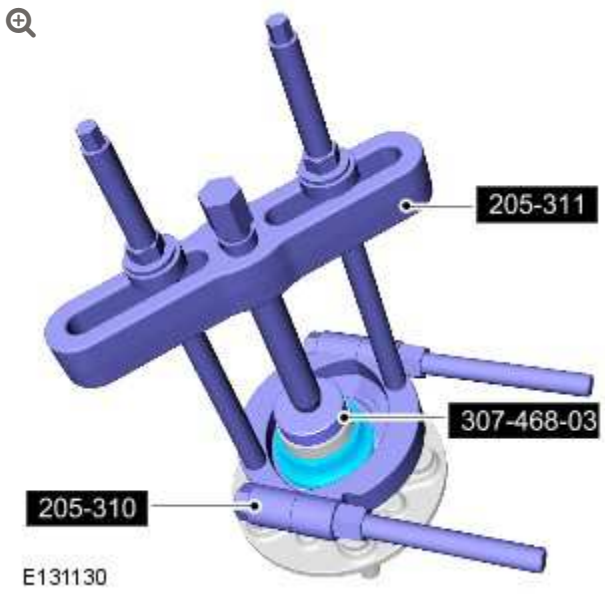

Special Tool(s): 205-310, 307-486

INSTALLATION

1.

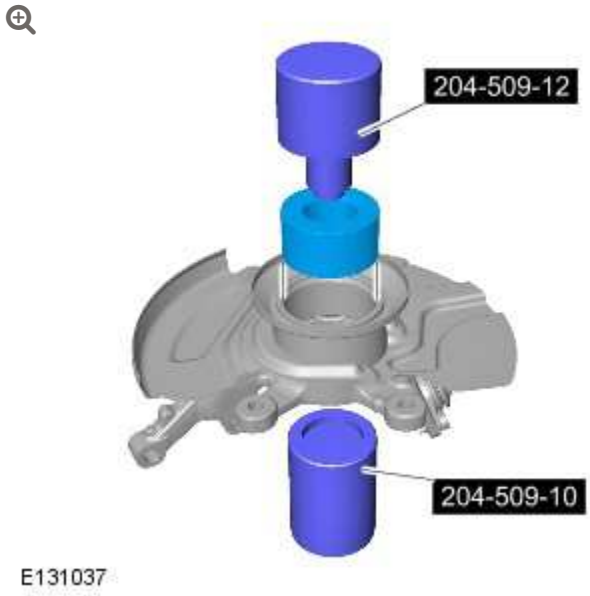

- Using a hydraulic press, install the wheel bearing into the wheel knuckle assembly.
- *Special Tool(s):* 204-509-12, 204-509-10

2.

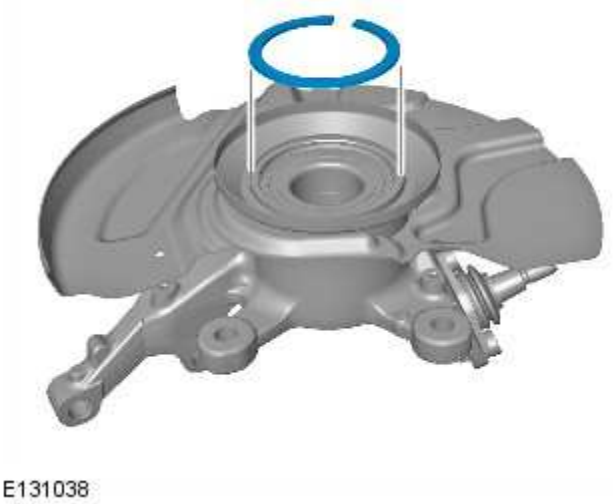

E131038

3.

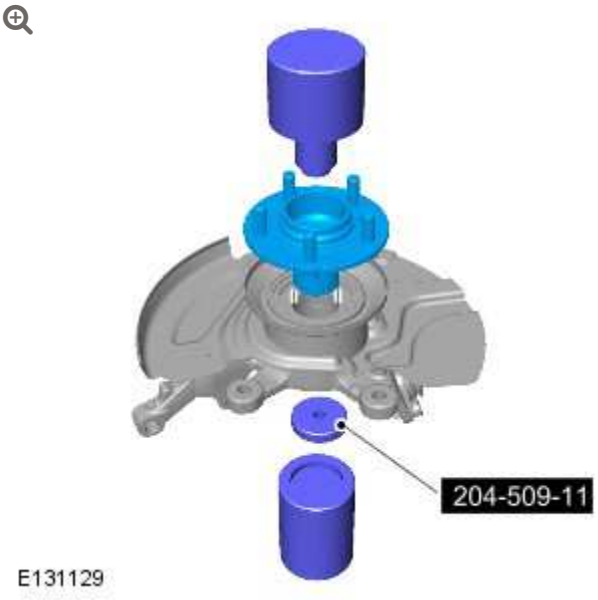

E131129

- Using a hydraulic press, install the wheel hub into the wheel bearing.
- *Special Tool(s):* 204-509-11

4.

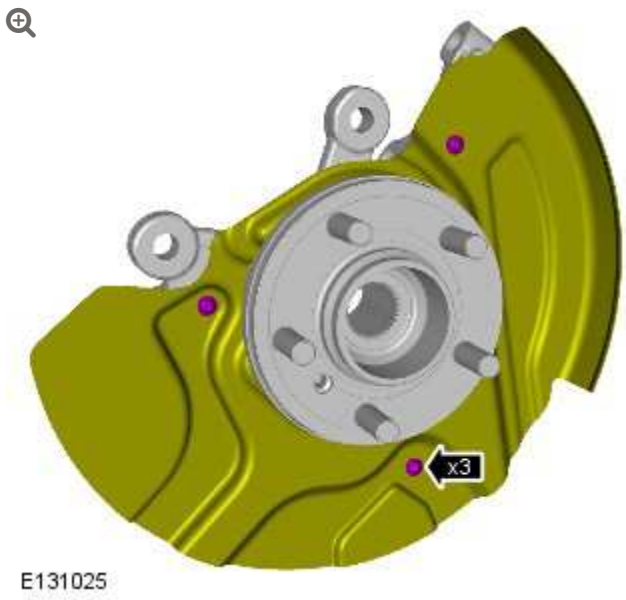

Torque: **15 Nm**

5. Refer to: Wheel Knuckle - Vehicles With: High Performance Brakes (204-01 Front Suspension, Removal and Installation).

6.
   - Install the wheel and tire.
   - Tighten the wheel nuts to 140 Nm (103 lb.ft).

FRONT SUSPENSION

FRONT WHEEL BEARING AND WHEEL HUB – VEHICLES WITHOUT: HIGH PERFORMANCE BRAKES

(G1451332)

REMOVAL AND INSTALLATION

SPECIAL TOOL(S)



100-005A

Remover, Puller



204-509-02

Remover, Front and Rear Hub and Bearing



204-509-04

Adapter, Front and Rear Hub and Bearing



204-509-05

Remover, Front and Rear Hub and Bearing



204-509-06

Remover, Front and Rear Hub and Bearing



204-509-10

Adapter, Front and Rear Hub and Bearing



204-509-11

Adapter, Front and Rear Hub and Bearing



204-509-12

Installer, Front and Rear Hub and Bearing



205-310

Remover, Bearing/Gear



205-311

Remover, Bearing/Gear



307-468-03

Adapter, Differential Bearing Remover

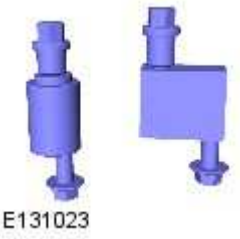

JLR-204-509-13

Adapter, Front and Rear Hub and Bearing

REMOVAL

NOTE:

RH illustration shown, LH is similar.

1. **WARNING:**

   Make sure to support the vehicle with axle stands.

   Raise and support the vehicle.

2. Remove the wheel and tire.

3. Refer to: Wheel Knuckle - Vehicles Without: High Performance Brakes (204-01 Front Suspension, Removal and Installation).

4. 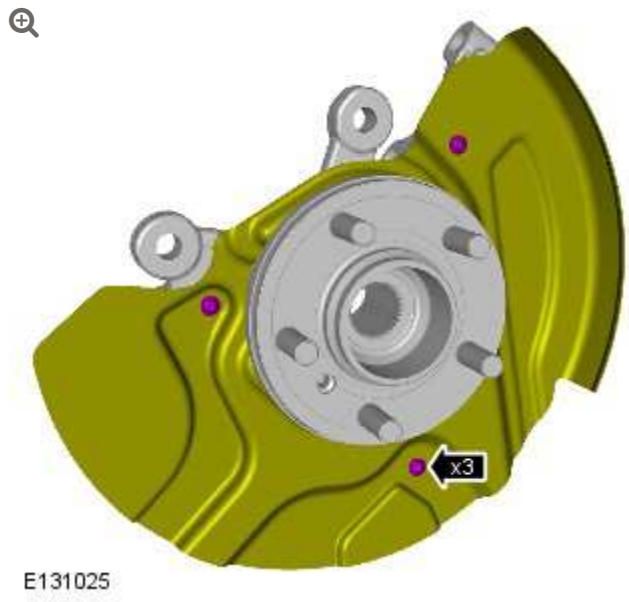

5.

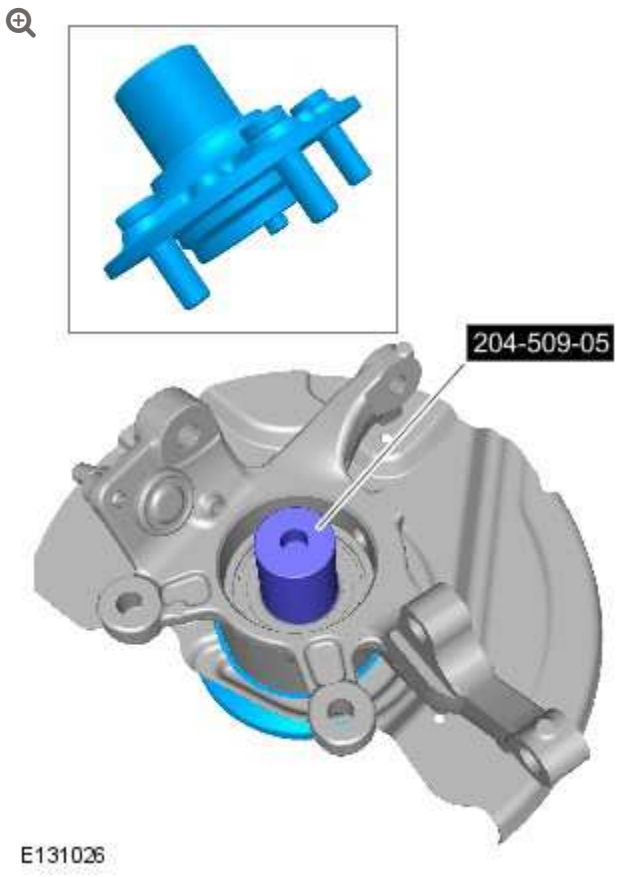

Special Tool(s): 204-509-05

6.

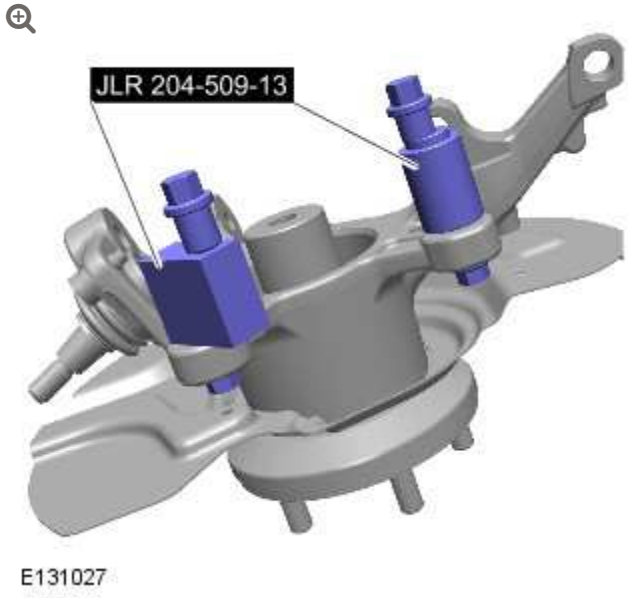

Special Tool(s): JLR-204-509-13

7.

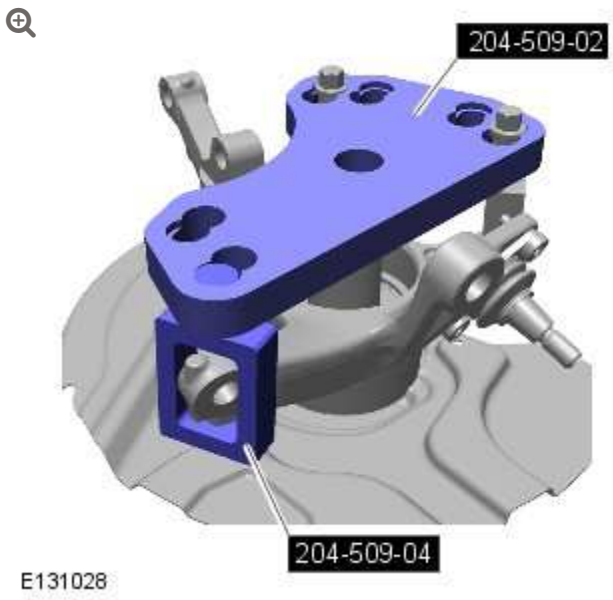

Special Tool(s): 204-509-02, 204-509-04

8.

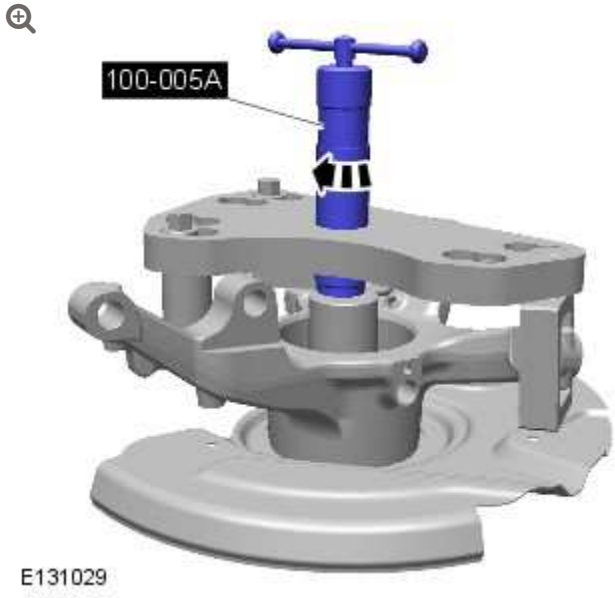

Special Tool(s): 100-005A

9.



E131030

10.

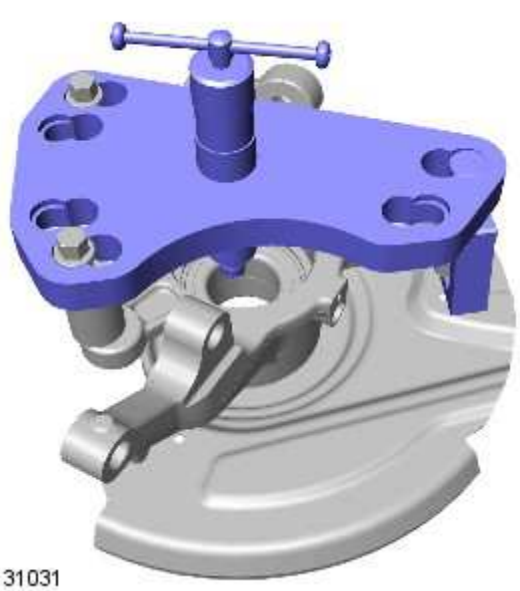

E131031

Remove the special tools.

11.



E131032

12.

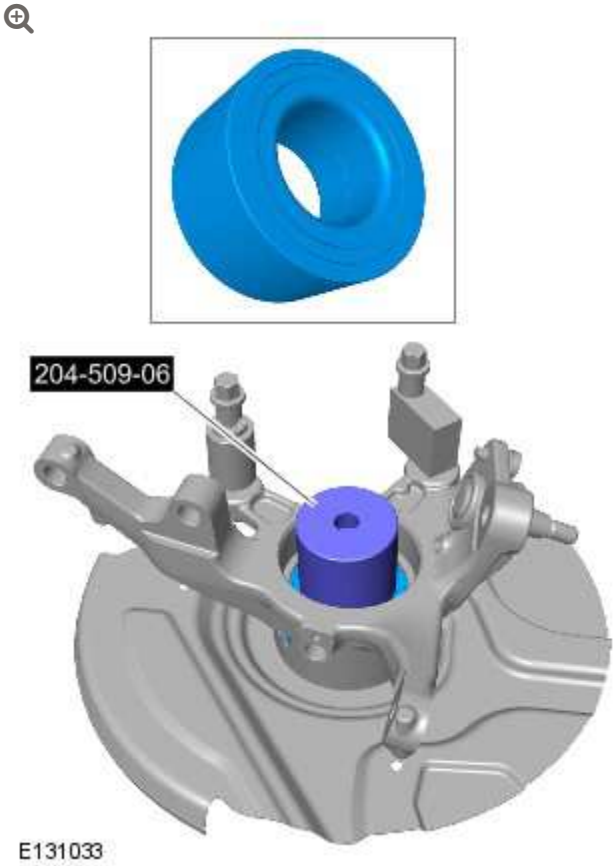

E131033

Special Tool(s): 204-509-06

13.

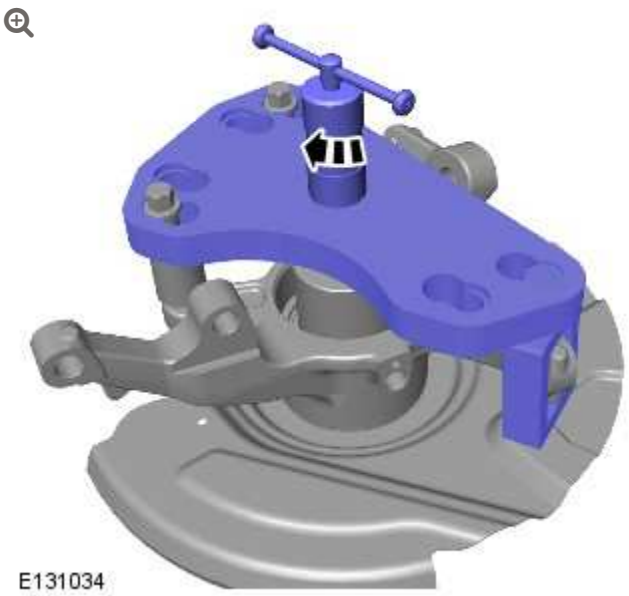
E131034

14.


E131035

15.

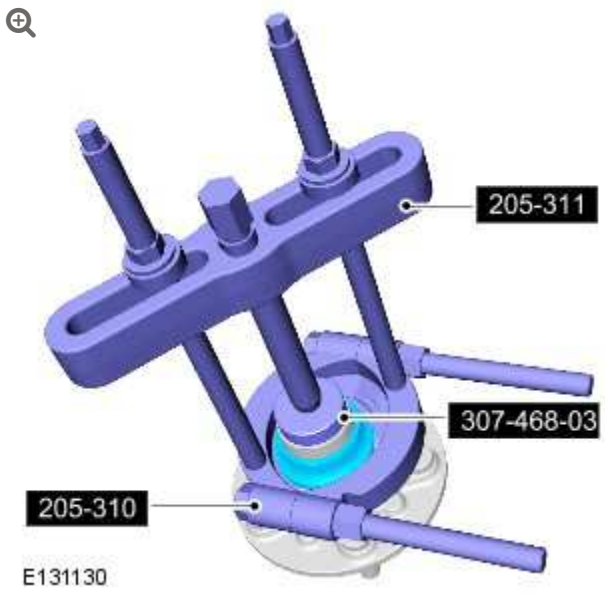

Special Tool(s): 205-310, 205-311, 307-468-03

INSTALLATION

1.

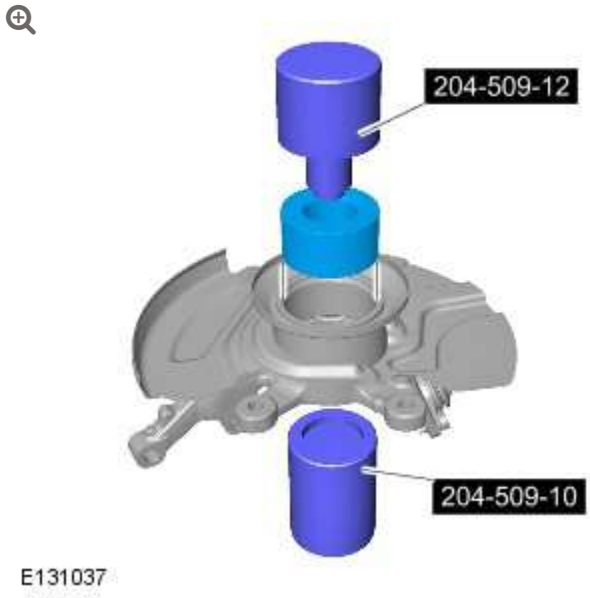

- Using a hydraulic press, install the wheel bearing into the wheel knuckle assembly.
- *Special Tool(s):* 204-509-12, 204-509-10

2.

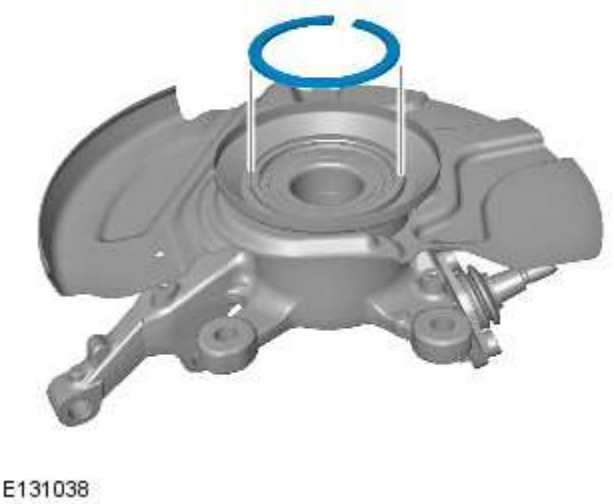

E131038

3.

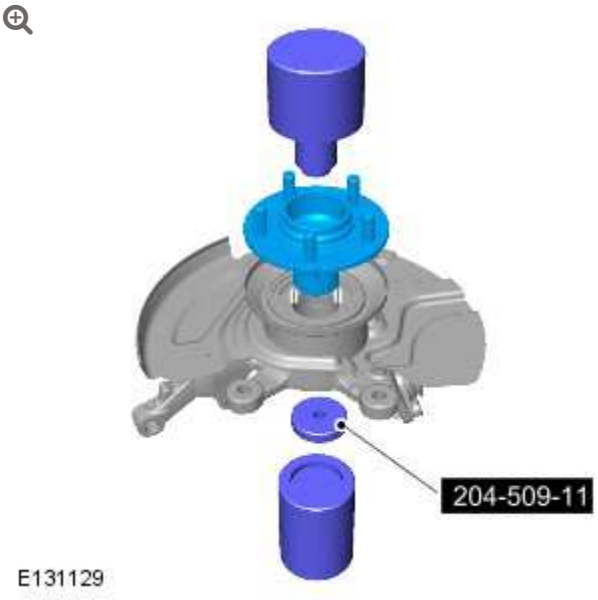

E131129

- Using a hydraulic press, install the wheel hub into the wheel bearing.
- *Special Tool(s):* 204-509-11

4.

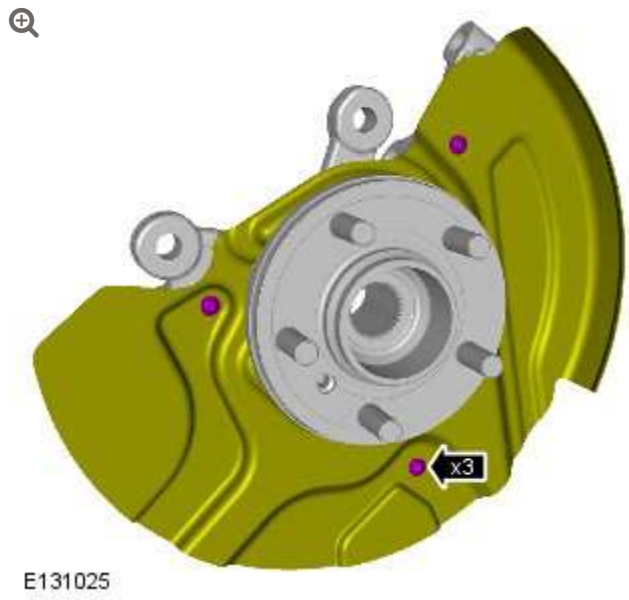

Torque: **15 Nm**

5. Refer to: Wheel Knuckle - Vehicles Without: High Performance Brakes (204-01 Front Suspension, Removal and Installation).

6.
   - Install the wheel and tire.
   - Tighten the wheel nuts to 140 Nm (103 lb.ft).

FRONT SUSPENSION

REAR LOWER ARM BALL JOINT (G928134)

REMOVAL AND INSTALLATION

60.15.04	BALL JOINTS - LOWER - BOTH SIDES - RENEW	ALL DERIVATIVES	0.7	USED WITHINS	+

SPECIAL TOOL(S)



JLR-205-754(LRT-54-027)

Ball joint separator

REMOVAL

NOTE:

The rear lower ball joints can be replaced individually.

1. **WARNING:**

   Do not work on or under a vehicle supported only by a jack. Always support the vehicle on safety stands.

   Raise and support the vehicle.

2. Remove the wheel and tire.

3. **CAUTION:**

   Make sure the rear lower arm does not over articulate. Failure to follow this instruction may result in damage to the rear lower arm ball joint.

   NOTE:

   Discard the nut and bolt.

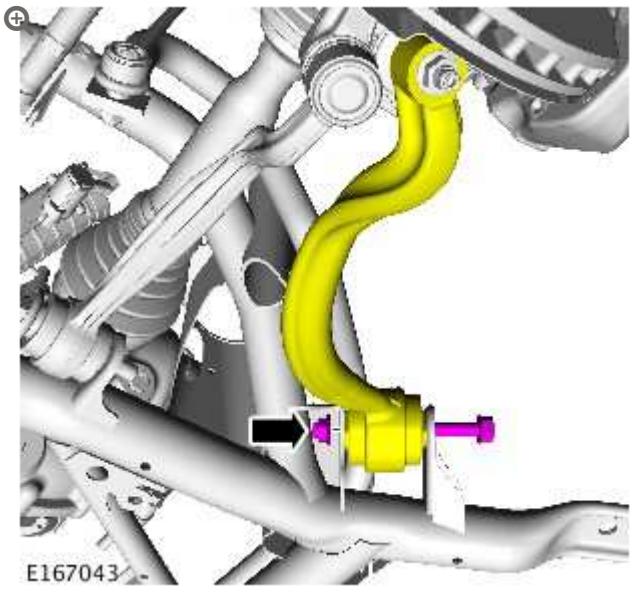

Release the rear arm from the subframe and position to one side.

4.

NOTES:

- Discard the bolts.
- Do not disassemble further if removed for access only.

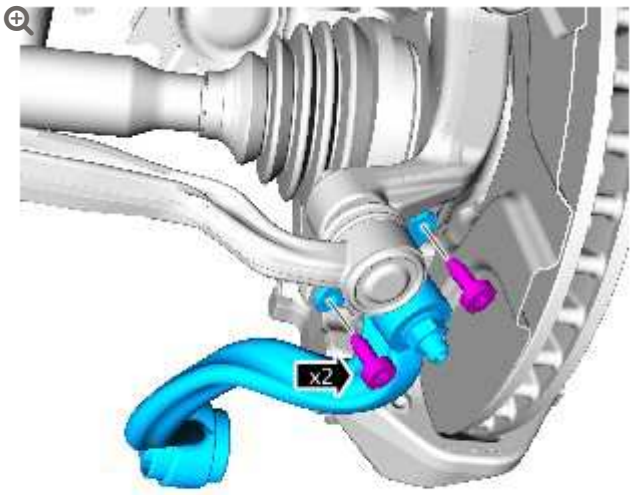

E167044

Remove the rear lower arm and ball joint from the knuckle.

5.

NOTES:

- Discard the nut.
- Use a wrench on the hexagon provided to prevent the ball joint rotating.

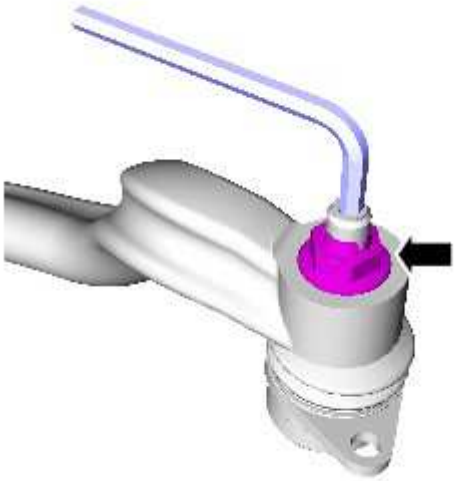

E167045

Remove the nut.

6.

CAUTION:

Make sure the ball joint seal is not damaged. A damaged seal will lead to the premature failure of the joint.

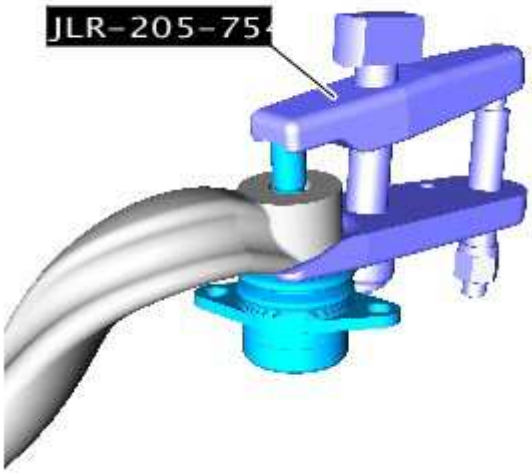

E167046

Using the special tool, release the ball joint.

INSTALLATION

1. **WARNING:**

> Make sure that a new nut is installed.

NOTE:

> Use a wrench on the hexagon provided to prevent the ball joint rotating.

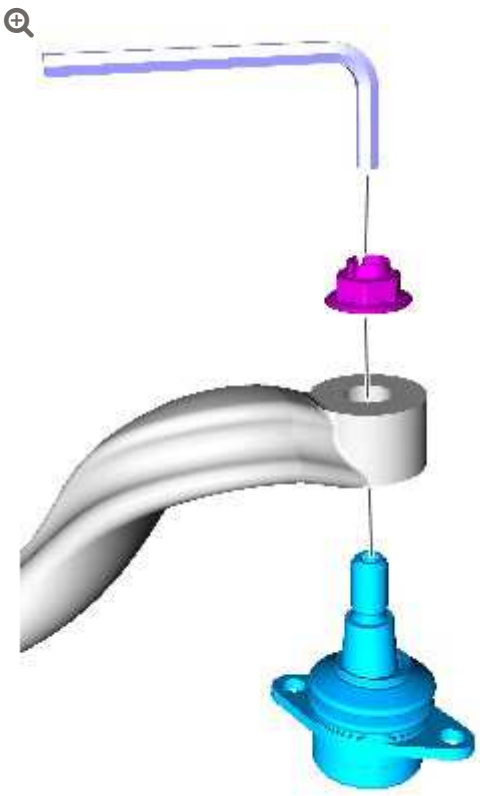

E167069

Install the ball joint to the rear lower arm.

- Tighten the nut to 80 Nm (59 lb.ft).

2.

WARNING:

Make sure that new bolts are installed.

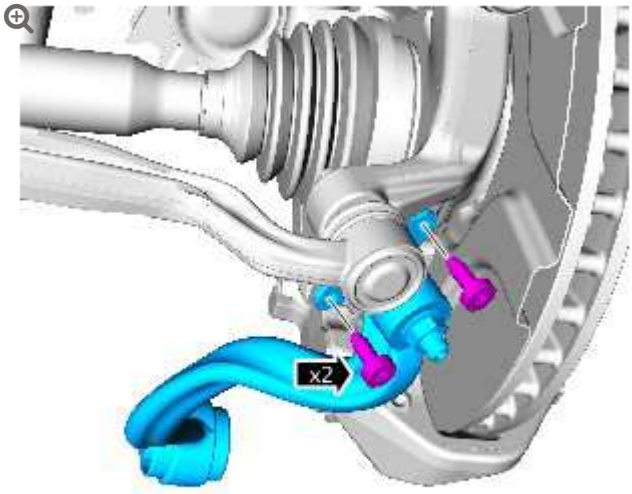

E167044

Install the rear lower arm and ball joint to the knuckle.

- Tighten the bolts to 60 Nm (44 lb.ft).

3.

WARNING:

Make sure that a new nut and bolt is installed.

CAUTION:

Only tighten the nuts and bolts when the suspension is in the normal drive position.

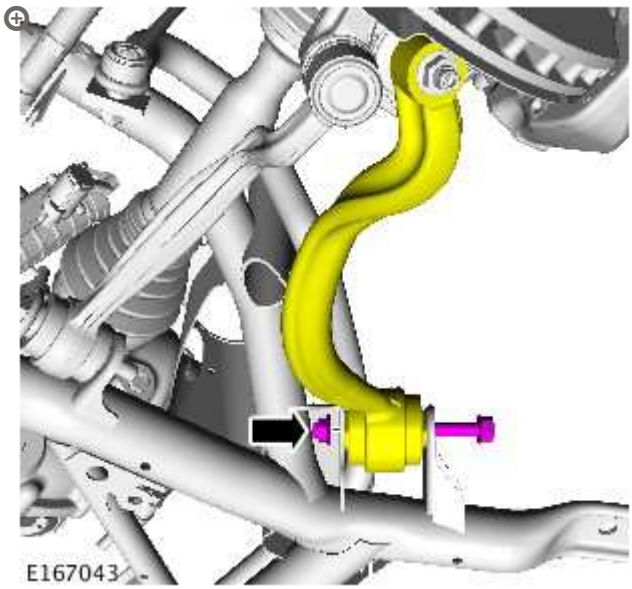

Install the rear lower arm to the subframe.

- Tighten the nut and bolt to 165 Nm (121 lb.ft). plus a further 90 degrees.

4. Install the wheel and tire.
   - Tighten the wheel nuts to 140 Nm (103 lb.ft).

5. Check, and if necessary, adjust the wheel alignment

FRONT SUSPENSION

REAR LOWER ARM BUSHING (G928135)

REMOVAL AND INSTALLATION

60.40.10	BUSHING - TIE-ROD - ONE SIDE - RENEW	ALL DERIVATIVES	0.6	USED WITHINS	+

SPECIAL TOOL(S)



204-508

Remover/Installer

REMOVAL

1. Remove the LH rear lower arm.
   For additional information, refer to: Rear Lower Arm (204-01 Front Suspension, Removal and Installation).

2. 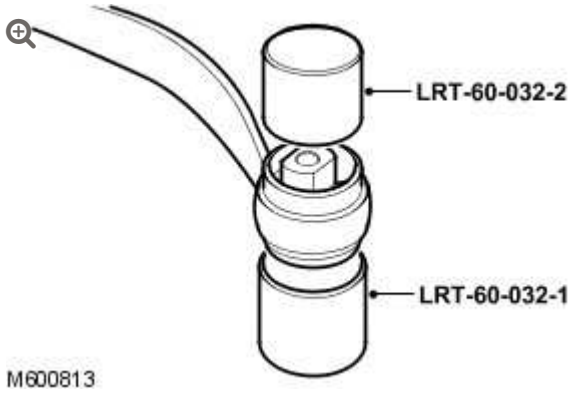

   Using the special tools, remove the rear lower arm bushes.

INSTALLATION

1. 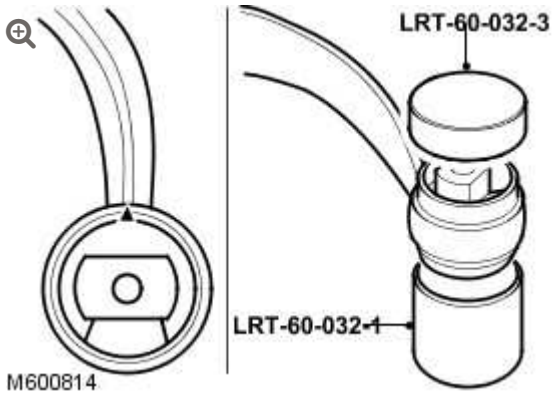

   Using the special tools, install the rear lower arm bushes.

2. Install the LH rear lower arm.
   For additional information, refer to: Rear Lower Arm (204-01 Front Suspension, Removal and Installation).

3. Repeat the procedure for the RH side.

FRONT SUSPENSION

REAR LOWER ARM (G928133)

REMOVAL AND INSTALLATION

60.40.09	TIE-ROD - RENEW	ALL DERIVATIVES	0.5	USED WITHINS

REMOVAL

NOTE:

LH illustration shown, RH is similar.

1.

WARNING:

Do not work on or under a vehicle supported only by a jack. Always support the vehicle on safety stands.

Raise and support the vehicle.

2. Remove the wheel and tire.

3. **CAUTION:**

Make sure the rear lower arm does not over articulate. Failure to follow this instruction may result in damage to the rear lower arm ball joint.

NOTE:

Discard the nut and bolt.

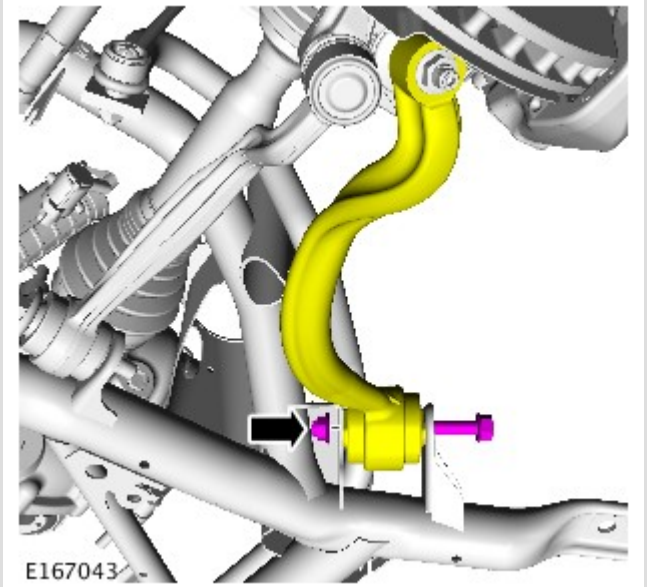

Release the rear arm from the subframe and position to one side.

4.

NOTES:

- Discard the bolts.
- Do not disassemble further if removed for access only.

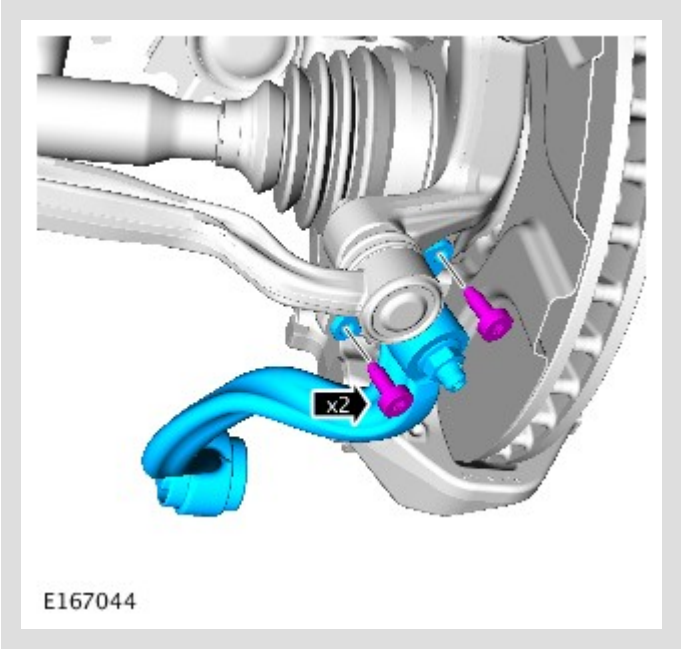

Remove the rear lower arm and ball joint from the knuckle.

5.

NOTES:

- Discard the nut.
- Use a wrench on the hexagon provided to prevent the ball joint rotating.

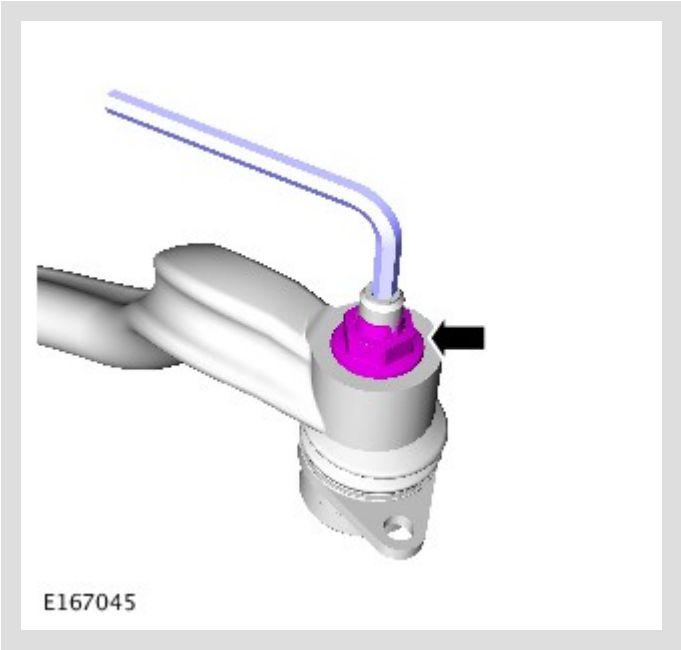

Remove the nut.

6.

CAUTION:

Make sure the ball joint seal is not damaged. A damaged seal will lead to the premature failure of the joint.

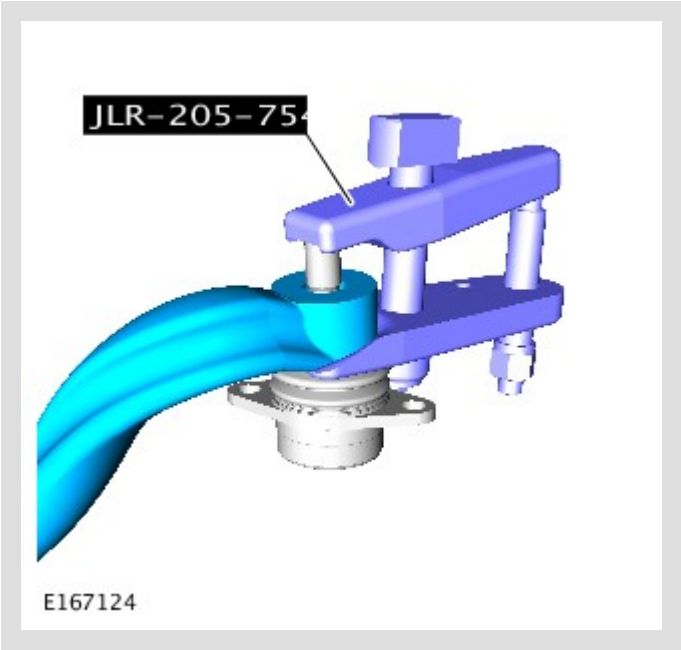

Using the special tool, release the ball joint.

INSTALLATION

1.

WARNING:

Make sure that a new nut is installed.

NOTE:

Use a wrench on the hexagon provided to prevent the ball joint rotating.

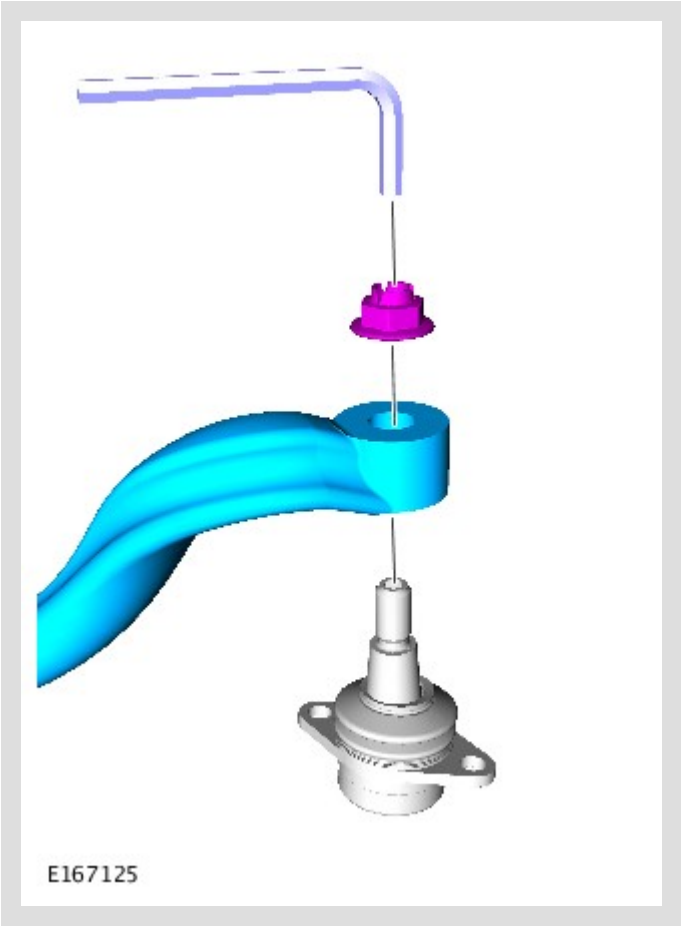

Install the ball joint to the rear lower arm.

Tighten the nut to 80 Nm (59 lb.ft).

2.

WARNING:

Make sure that new bolts are installed.

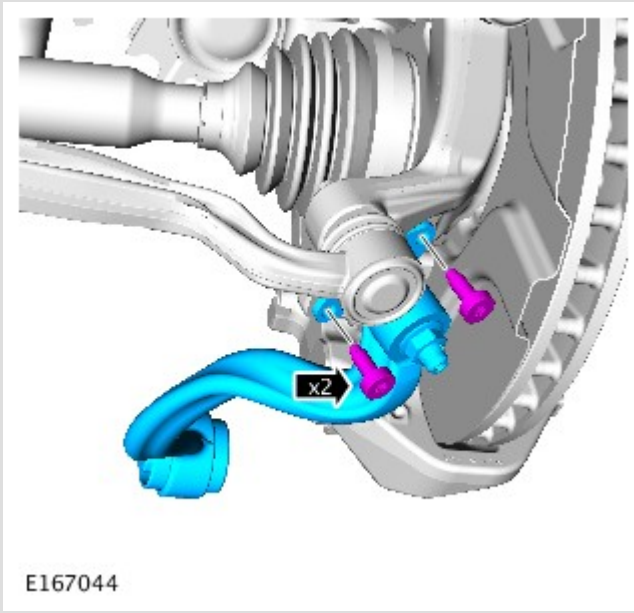

Install the rear lower arm and ball joint to the knuckle.

Tighten the bolts to 60 Nm (44 lb.ft).

3.

WARNING:

Make sure that a new nut and bolt is installed.

CAUTION:

Only tighten the nuts and bolts when the suspension is in the normal drive position.

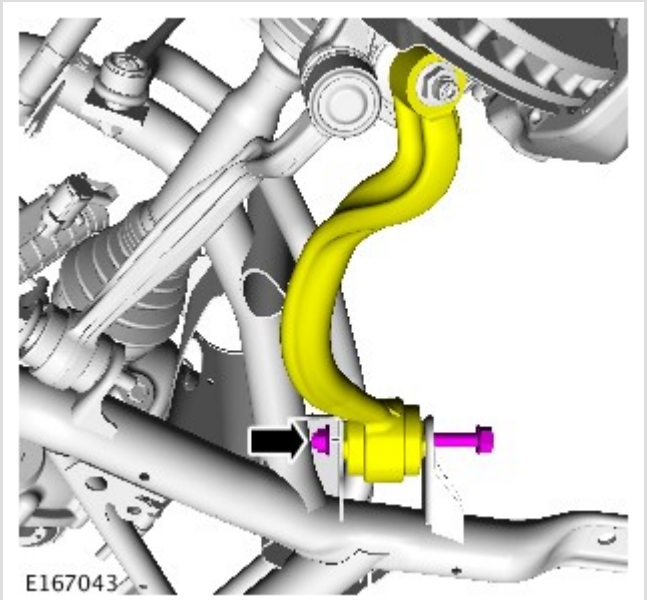

Install the rear lower arm to the subframe.

Tighten the nut and bolt to 165 Nm (121 lb.ft). plus a further 90 degrees.

4. Install the wheel and tire.

   Tighten the wheel nuts to 140 Nm (103 lb.ft).

5. Check, and if necessary, adjust the wheel alignment.

   For additional information, refer to: Four-Wheel Alignment (204-00 Suspension System - General Information, General Procedures).

FRONT SUSPENSION

SHOCK ABSORBER AND SPRING ASSEMBLY (G1475886)

REMOVAL AND INSTALLATION

60.21.01	AIR SPRING ASSEMBLY - ONE SIDE - RENEW	ALL DERIVATIVES	1	USED WITHINS	+

REMOVAL

1. **WARNING:**

   Do not work on or under a vehicle supported only by a jack. Always support the vehicle on safety stands.

   Raise and support the vehicle.

2. Remove the front road wheel.

3. Using the Land Rover approved diagnostic system, depressurize the air suspension.
   For additional information, refer to: Air Suspension System

Depressurize and Pressurize (204-05 Vehicle Dynamic Suspension, General Procedures).

4. Release the ABS sensor lead and brake line.
   - Release from the 3 clips.

5. 

   LH side: Release the brake pad wear sensor lead.
   - Release from the clip.

6. **CAUTION:**

   Note the fitted position of the special washer.

   NOTE:

   Use an additional wrench to prevent the ball joint rotating.

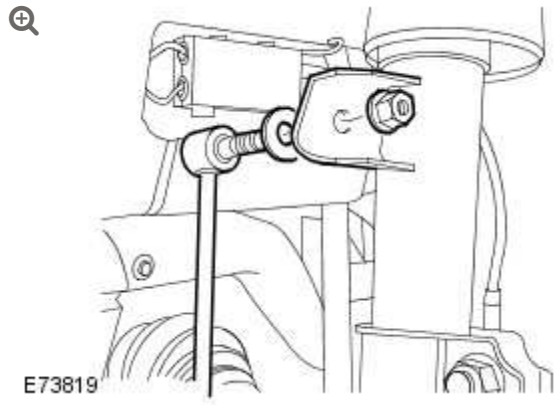

Release the stabilizer bar link.

- Remove and discard the nut.

7.

WARNING:

Use a jack to support the hub and lower arm.

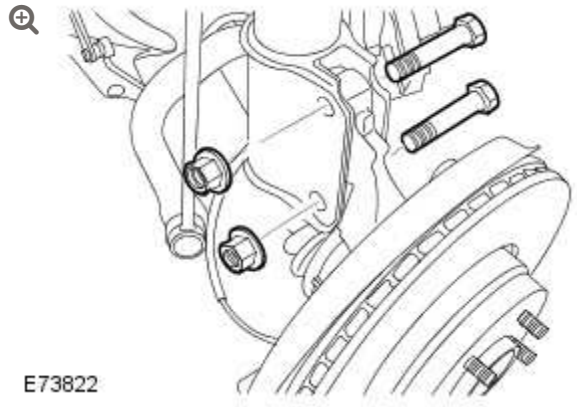

Release the hub from the air suspension spring.

- Remove the 2 nuts and 2 bolts.
- Lower the jack.

8.

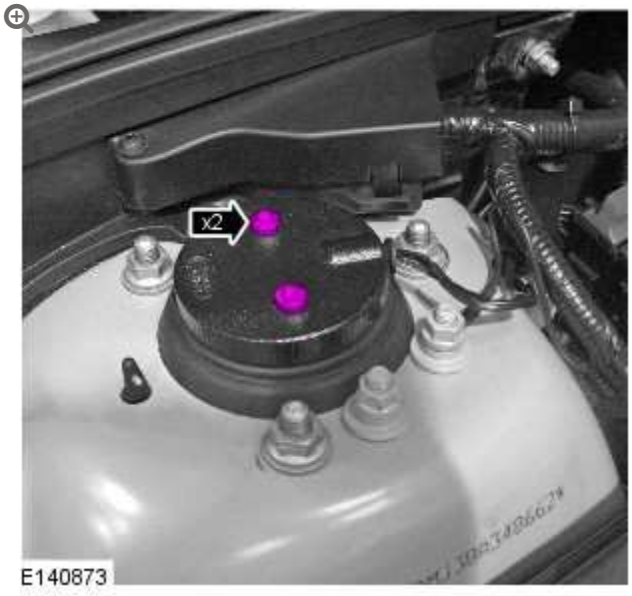

Remove damper retaining bolts.

---

9. **NOTE:**

Note the orientation of the damper.

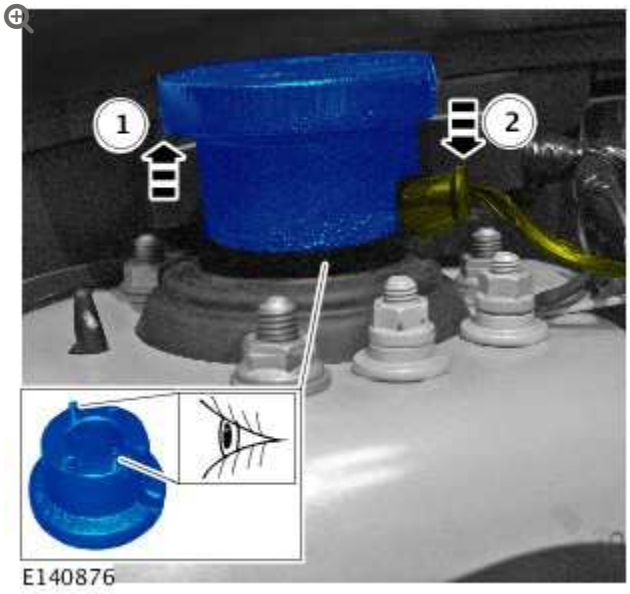

Remove the damper.

- Lift the damper.

- Release the wiring harness and remove the damper.

10.



Remove the electrical connector.

11.

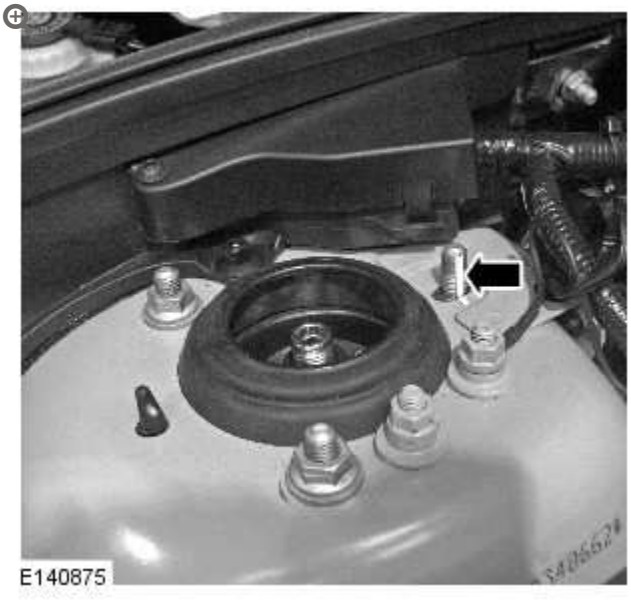

Mark the fitted position of the stud to aid assembly.

- Remove the nut.

12.

CAUTIONS:

- Lower the air suspension spring sufficiently to release the air line connection.
- Do not allow the brake caliper to hang on the brake hose.

NOTE:

Models with standard brakes shown, models with high performance brakes similar.

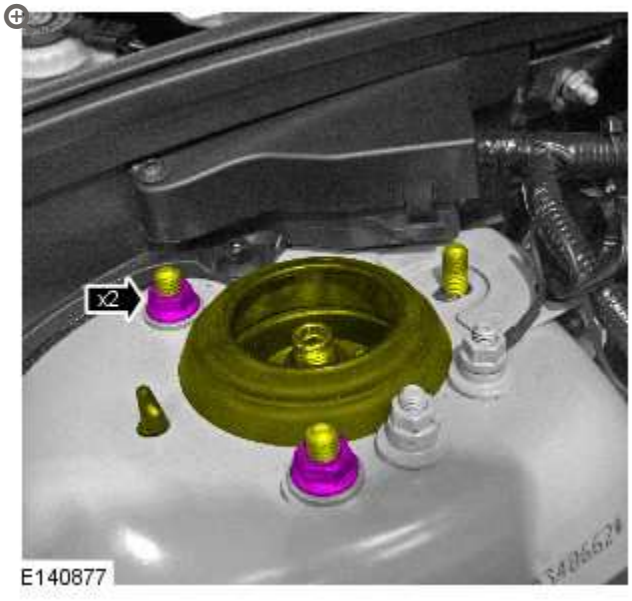

Release the air suspension spring.

- Remove the cap.
- Remove the 2 remaining nuts.

13.

CAUTION:

Before disconnecting or removing the components, make sure the area around the joint faces and connections are clean and dry. Plug open connections to prevent contamination.

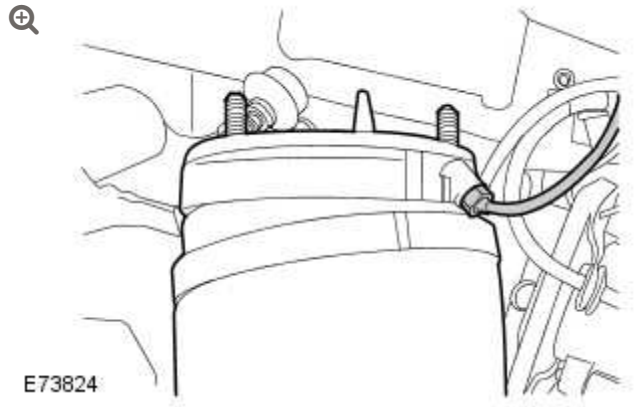

Remove the air suspension spring.

- Disconnect the air line.
- Remove and discard the gasket.

INSTALLATION

1.

CAUTIONS:

- Make sure the tag on the gasket is visible.
- The final tightening of the shock absorber and spring assembly retaining nuts must be carried out with the vehicle on its wheels.

NOTES:

- If installing a new air suspension spring, remove the air line union.
- Align stud to mark made on removal.
- Models with standard brakes shown, models with high performance brakes similar.

Install the air suspension spring.

- Clean the component mating faces.
- Install a new gasket.
- Install the air line but do not tighten the union fully at this stage.
- Tighten the nuts to 56 Nm (41 lb.ft).

2. Tighten the air line union to 3.5 Nm (2.6 lb.ft).

3. Connect the active suspension damper electrical connector.

4. **NOTE:**

   Make sure that the damper is installed in the correct orientation.

   Install the damper.

   - Tighten the bolts to 10 Nm.

5. Connect the hub to the air suspension spring.
   - Clean the component mating faces.

- Tighten the nuts and bolts to 250 Nm (184 lb.ft).

6. **CAUTION:**

> The washer is hardened and must be fitted in the correct position.

NOTE:

> Use an additional wrench to prevent the component from rotating.

Connect the stabilizer link.

- Install the special washer.
- Install a new locknut.
- Tighten the nut to 100 Nm (74 lb.ft).

7. Secure ABS sensor lead and brake line.
   - Secure into the 3 clips.

8. LH side: Secure the brake pad wear sensor lead.
   - Secure in the clip.

9. **CAUTION:**

> The air springs must be fully pressurised before the weight of the vehicle is applied to them.

Using the Land Rover approved diagnostic system, pressurize the air suspension.

For additional information, refer to: Air Suspension System Depressurize and Pressurize (204-05 Vehicle Dynamic Suspension, General Procedures).

10. Install the road wheel.
    - Tighten nuts to 140 Nm (103 lb.ft).

11. Check, and if necessary, adjust the wheel alignment.
    For additional information, refer to: Four-Wheel Alignment (204-00 Suspension System - General Information, General Procedures).

FRONT SUSPENSION

SHOCK ABSORBER AND SPRING ASSEMBLY (G513973)

DISASSEMBLY AND ASSEMBLY

DISASSEMBLY

WARNINGS:

- Ensure the spring compressor Safe Working Load (SWL) meets or exceeds the spring rating quoted in the Specifcations section.
  For additional information, refer to: Specifications (204-00, Specifications).
- Always follow the spring compressor manufacturer's instructions.

1.

WARNING:

Do not work on or under a vehicle supported only by a jack. Always support the vehicle on safety stands.

Raise and support the vehicle.

2. Remove the shock absorber and spring assembly.
For additional information, refer to: Shock Absorber and Spring Assembly (204-01, Removal and Installation).

3. Install a suitable spring compressor in a vise.

4. Install the shock absorber and spring assembly in the spring compressor.

Compress the spring just sufficiently to relieve the spring tension.

5.

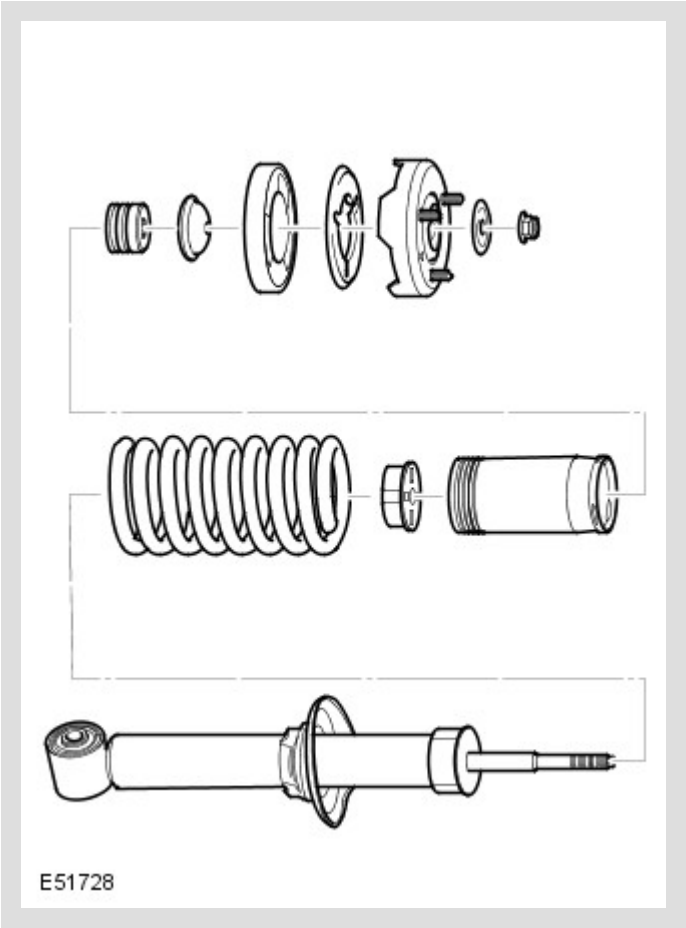

Remove the shock absorber.

Restrain the shock absorber spindle, remove and discard the nut.

Remove the upper bush rebound plate and upper bush.

Remove the upper mounting assembly.

Remove the dust tube and rebound plate assembly.

Remove the spring aid.

6. Remove the spring from the spring compressor.

7.

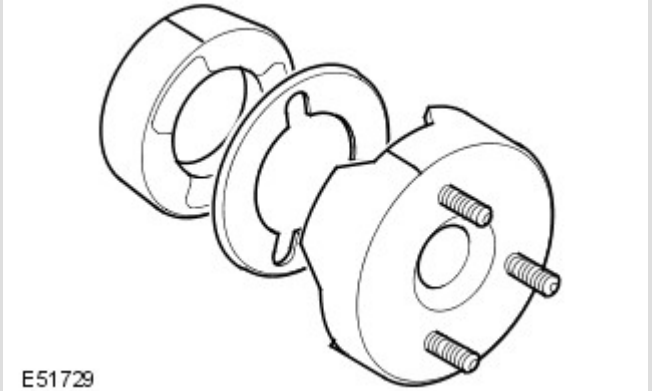

Clean and inspect the components for deterioration.

To aid reassembly, mark the position of the rubber insulator in relation to the upper mounting plate.

Remove the rubber insulator.

Remove the spacer.

Remove the rebound plate from the dust tube.

ASSEMBLY

1.

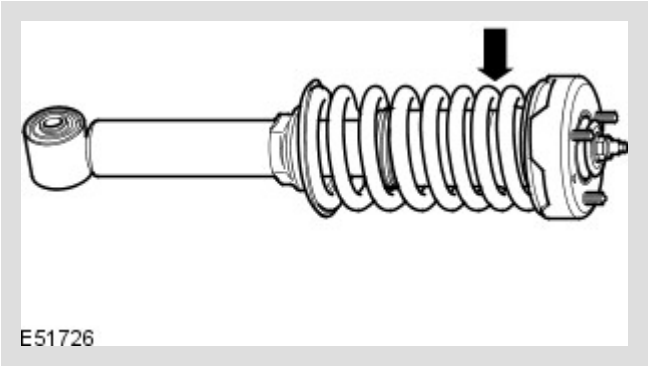

Install the spring in the spring compressor.

Make sure the spring is installed with the close coils positioned towards the top of the shock absorber.

2. Install the spring aid.

3. Install the dust tube.

Install the rebound plate into the dust tube.

4. Install the shock absorber.

Make sure the spring is correctly located in the spring seat.

5. Install the upper mounting.

Install the spacer and rubber insulator, making sure the spacer drops over the stud heads and the insulator is aligned with the mark made previously.

Install the upper bush and upper bush rebound plate.

Install a new nut and tighten to 98 Nm (72 lb.ft).

6. Install the shock absorber and spring assembly.
For additional information, refer to: Shock Absorber and Spring Assembly (204-01, Removal and Installation).

FRONT SUSPENSION

WHEEL KNUCKLE - VEHICLES WITH: HIGH PERFORMANCE BRAKES (G1225066)

REMOVAL AND INSTALLATION

SPECIAL TOOL(S)



E74092

211-314(LRT-57-036)

Ball joint separator

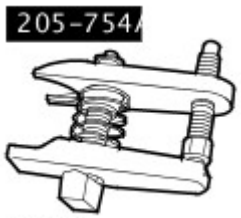

E45276

205-754(LRT-54-027)

Ball joint separator



204-506/3(LRT-60-030/3)

Halfshaft remover/replacer



204-506/1(LRT-60-030/1)

Halfshaft remover/replacer



204-506/2(LRT-60-030/2)

Halfshaft remover/replacer



204-506/5(LRT-60-030/5)

Retainers - halfshaft remover/replacer

REMOVAL

NOTES:

- If a new knuckle is installed a new wheel bearing must be installed.
- Some variation in the illustrations may occur, but the essential information is always correct.
- RH illustration shown, LH is similar.

1. **WARNING:**

   Make sure to support the vehicle with axle stands.

   Raise the front of the vehicle.

2. Remove the front wheel and tire.

3.

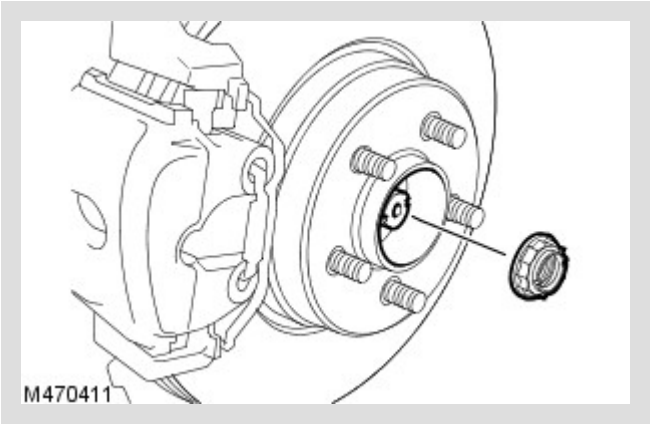

With assistance, remove and discard the halfshaft nut.

4. Remove the RH front brake disc.
   For additional information, refer to: Brake Disc - Vehicles With: Standard Brakes (206-03 Front Disc Brake, Removal and Installation).

5.

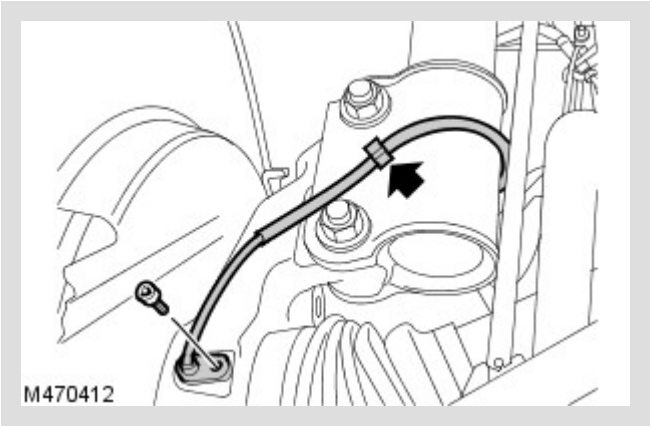

Release the RH front anti-lock brake system (ABS) sensor and wiring harness.

Release the clip.

Remove the bolt.

6. Loosen the RH tie rod end locking nut.

7.

CAUTION:

Make sure the ball joint seal is not damaged. A damaged seal will lead to the premature failure of the joint.

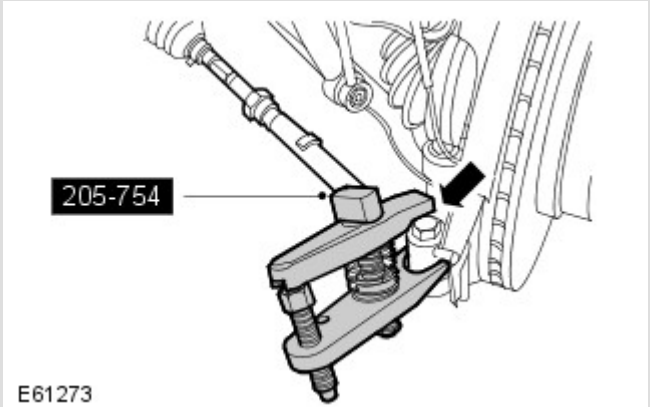

Using the special tool release the RH tie rod end.

Remove and discard the nut.

8. RH side front: Release the suspension height sensor.

9.

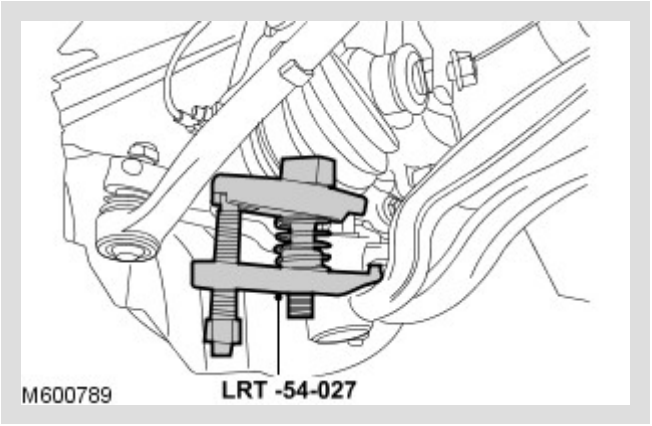

Using the special tool release the RH front lower arm.

Remove the nut.

Loosen the nut and bolt.

10.

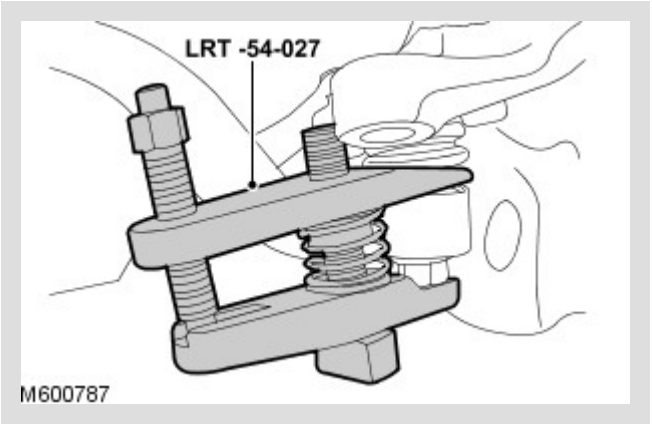

Using the special tool release the RH rear lower arm.

Loosen the nut and bolt.

Remove the nut.

11.

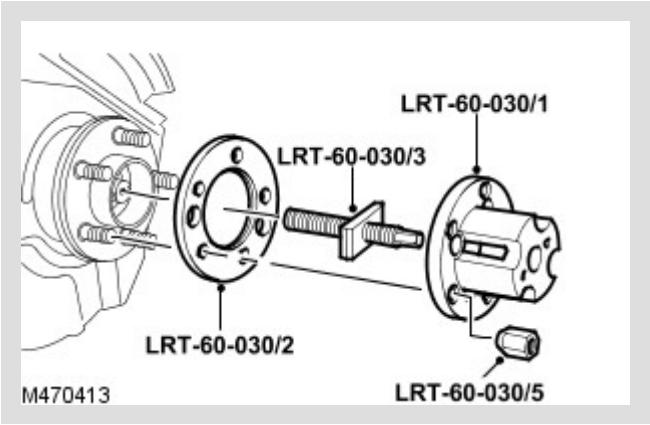

Using the special tools, release the halfshaft from the wheel hub.

12. Remove the special tools.

13. Release the halfshaft from the wheel hub.

14.

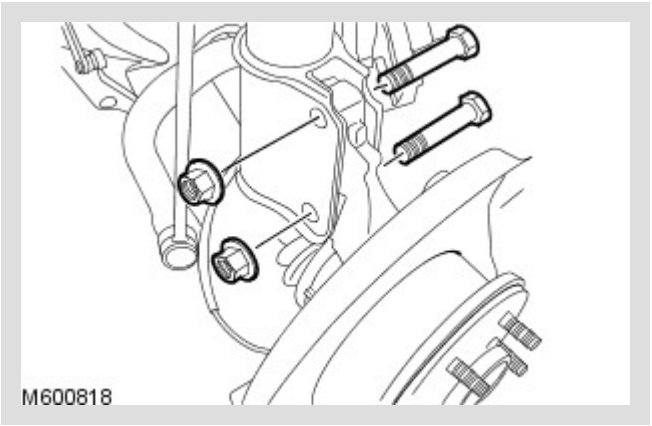

Remove the wheel knuckle assembly.

Remove the 2 nuts and 2 bolts.

INSTALLATION

1. Install the wheel knuckle assembly.

   Tighten the nuts and bolts to 250 Nm (184 lb.ft).

2. Locate the halfshaft in the wheel hub.

Lightly lubricate the halfshaft splines.

Clean the halfshaft and wheel hub splines.

3. Using the special tool, pull the halfshaft in to the wheel hub.

4. Remove the special tool.

5. **CAUTION:**

Only tighten the nuts and bolts when the suspension is in the normal drive position.

Secure the RH rear lower arm.

Tighten the nut to 80 Nm (59 lb.ft).

Tighten the rear lower arm nut and bolt to 165 Nm (122 lb.ft) plus a further 90 degrees.

6. **CAUTION:**

Only tighten the nuts and bolts when the suspension is in the normal drive position.

Secure the RH front lower arm.

Tighten the nut to 80 Nm (59 lb.ft).

Tighten the lower arm nuts and bolts to 165 Nm (122 lb.ft) plus a further 90 degrees.

7. RH side front: Secure the suspension height sensor.

8. Secure the RH tie rod end.

   Install a new nut and tighten to 80 Nm (59 lb.ft).

9. Secure the RH front ABS sensor and wiring harness.

   Apply anti-seize compound to the ABS sensor.

   Tighten the bolt to 8 Nm (6 lb.ft)

   Secure in the clip.

10. Install the RH front brake disc.
    For additional information, refer to: Brake Disc - Vehicles With: Standard Brakes (206-03 Front Disc Brake, Removal and Installation).

11. With assistance tighten the wheel hub nut to 420Nm (311 lb.ft).

    Use a new nut.

    Stake the nut to the halfshaft.

12. Install the wheel and tire.

    Tighten the wheel nuts to 140 Nm (103 lb.ft).

13. Check, and if necessary, adjust the wheel alignment.
For additional information, refer to: Four-Wheel Alignment (204-00 Suspension System - General Information, General Procedures).

FRONT SUSPENSION

WHEEL KNUCKLE – VEHICLES WITHOUT: HIGH PERFORMANCE BRAKES

(G1225404)

REMOVAL AND INSTALLATION

SPECIAL TOOL(S)



211–314 (LRT–57–036)

Ball joint separator



205-754 (LRT-54-027)

Ball joint separator



204-506/3 (LRT-60-030/3)

Halfshaft remover/replacer



204-506/1 (LRT-60-030/1)

Halfshaft remover/replacer



204-506/2 (LRT-60-030/2)

Halfshaft remover/replacer



204-506/5 (LRT-60-030/5)

Retainers - halfshaft remover/replacer



204-506/4

Installer, Halfshaft

REMOVAL

NOTES:

- If a new knuckle is installed a new wheel bearing must be installed.
- Some variation in the illustrations may occur, but the essential information is always correct.
- RH illustration shown, LH is similar.

1.

WARNING:

Make sure to support the vehicle with axle stands.

Raise the front of the vehicle.

2. Remove the front wheel and tire.

3. 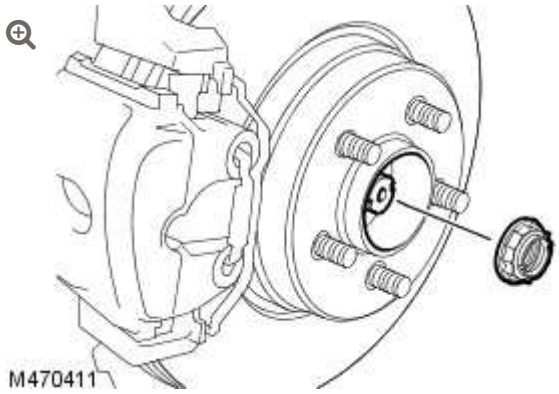

With assistance, remove and discard the halfshaft nut.

4. Remove the RH front brake disc.
For additional information, refer to: Brake Disc - Vehicles With: Standard Brakes (206-03 Front Disc Brake, Removal and Installation).

5. 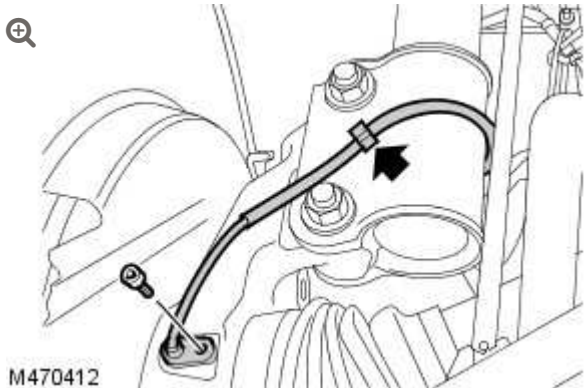

Release the RH front anti-lock brake system (ABS) sensor and wiring harness.

- Release the clip.
- Remove the bolt.

6.

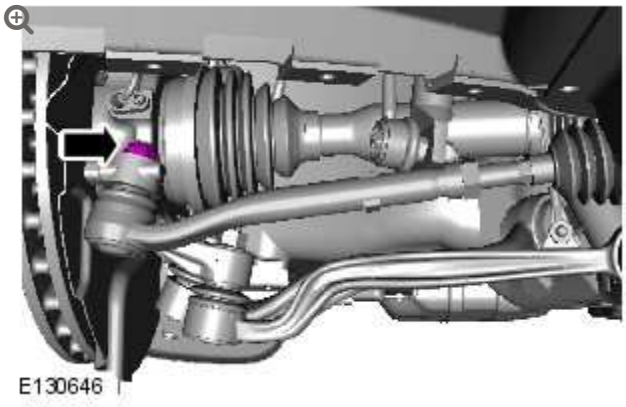

Loosen the RH tie rod end locking nut.

7.

CAUTION:

Make sure the ball joint seal is not damaged. A damaged seal will lead to the premature failure of the joint.

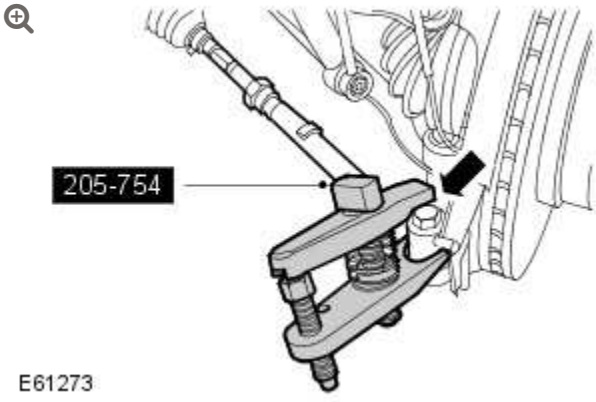

Using the special tool release the RH tie rod end.

- Remove and discard the nut.

8.

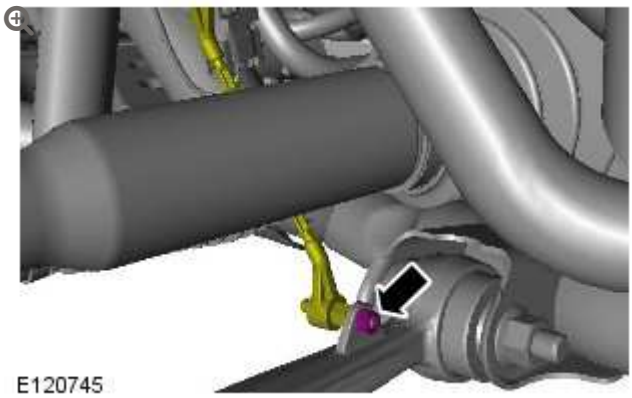

RH side front: Release the suspension height sensor.

9.

NOTE:

LH illustration shown, RH is similar.

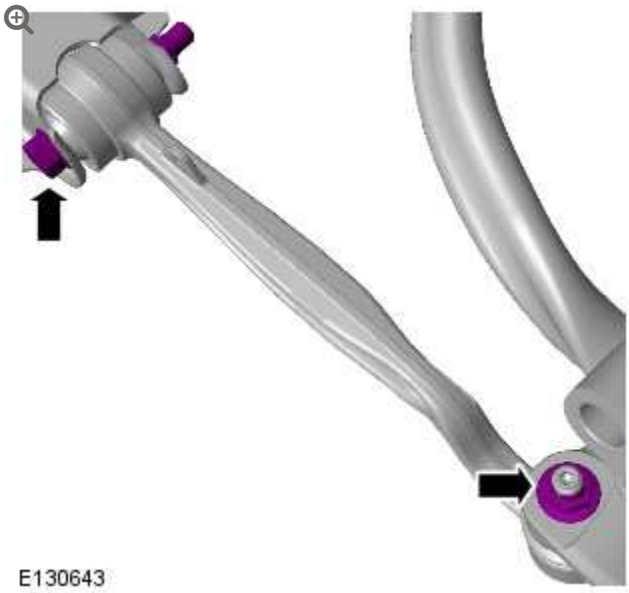

Loosen the front lower arm retaining nut and bolt.

- Loosen the lower arm ball joint retaining nut.

10.

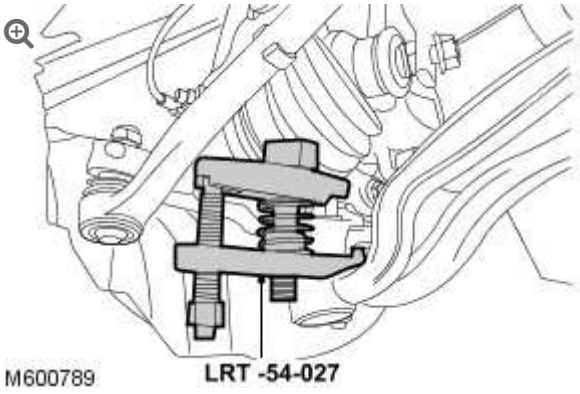

Using the special tool release the RH front lower arm.

- Remove the nut.

11.

NOTE:

LH illustration shown, RH is similar.

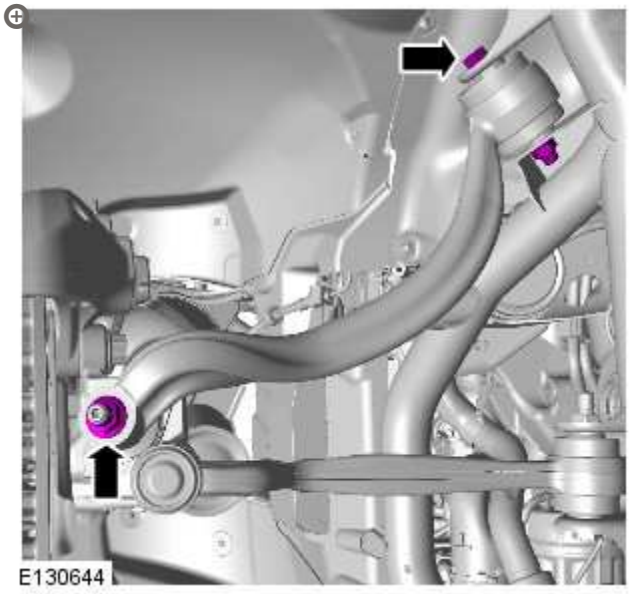

Loosen the rear lower arm retaining nut and bolt.

- Loosen the lower arm ball joint retaining nut.

12.

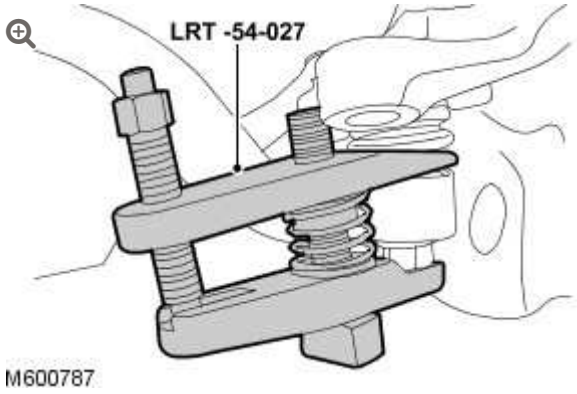

Using the special tool release the RH rear lower arm.

- Remove the nut.

13. **CAUTION:**

> Do not use a hammer to detach the halfshaft from the hub assembly, failure to follow this instruction may result in damage to the halfshaft.

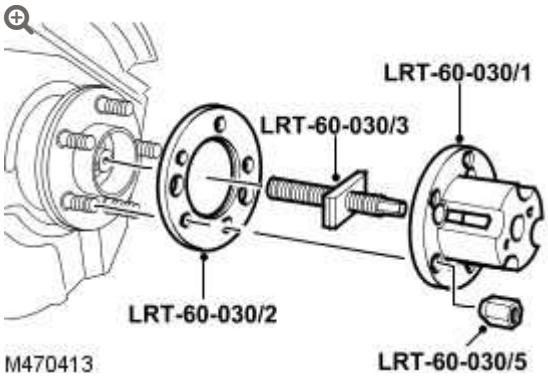

Using the special tools, release the halfshaft from the wheel hub.

14. Remove the special tools.

15. Release the halfshaft from the wheel hub.

16. 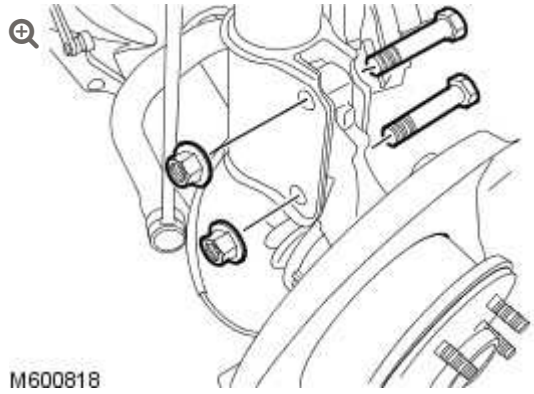

Remove the wheel knuckle assembly.

- Remove the 2 nuts and 2 bolts.

INSTALLATION

1. Install the wheel knuckle assembly.
   - Tighten the nuts and bolts to 250 Nm (184 lb.ft).
2. Locate the halfshaft in the wheel hub.
   - Lightly lubricate the halfshaft splines.
   - Clean the halfshaft and wheel hub splines.
3. **CAUTION:**

   Install the halfshaft nut finger tight.

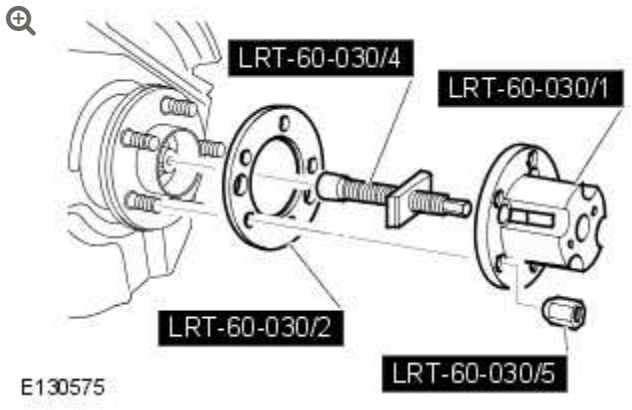

Using the special tools, pull the halfshaft in to the wheel hub.

4. Remove the special tool.

5. **CAUTION:**

   Only tighten the nuts and bolts when the suspension is in the normal drive position.

   Secure the RH rear lower arm.

   - Tighten the nut to 80 Nm (59 lb.ft).
   - Tighten the rear lower arm nut and bolt to 165 Nm (122 lb.ft) plus a further 90 degrees.

6. **CAUTION:**

   Only tighten the nuts and bolts when the suspension is in the normal drive position.

   Secure the RH front lower arm.

   - Tighten the nut to 80 Nm (59 lb.ft).
   -

Tighten the lower arm nuts and bolts to 165 Nm (122 lb.ft) plus a further 90 degrees.

7. RH side front: Secure the suspension height sensor.

8. Secure the RH tie rod end.
   - Install a new nut and tighten to 80 Nm (59 lb.ft).

9. Secure the RH front ABS sensor and wiring harness.
   - Apply anti-seize compound to the ABS sensor.
   - Tighten the bolt to 8 Nm (6 lb.ft)
   - Secure in the clip.

10. Install the RH front brake disc.
    For additional information, refer to: Brake Disc - Vehicles With: Standard Brakes (206-03 Front Disc Brake, Removal and Installation).

11. **CAUTION:**

    Do not use air tools to install the nut. Failure to follow this instruction may result in damage to the component.

    With assistance tighten the wheel hub nut to 420Nm (311 lb.ft).
    - Use a new nut.
    - Stake the nut to the halfshaft.

12. - Install the wheel and tire.
    - Tighten the wheel nuts to 140 Nm (103 lb.ft).

13. Check, and if necessary, adjust the wheel alignment.

REAR SUSPENSION

SPECIFICATIONS

Torque Specifications

DESCRIPTION	NM	LB-FT
Lower arm to wheel knuckle bolt +	250	184
Upper arm to wheel knuckle bolt +	165	121
Shock absorber to lower arm bolt +	90	66
Shock absorber top nut	27	20
Shock absorber mounting nuts +	63	46
Stabilizer bar clamp bolts	56	40
Stabilizer bar link nuts +	100	74
Toe link ball joint nut +	165	121
Toe link to subframe bolt +	165	121
Height sensor link to lower arm nut	19	14
Height sensor to bracket bolts	5	3.7
Lower arm to subframe bolts +	165	121
Upper arm to subframe bolts +	180	133
Subframe to body bolts +	165	121

+ A new nut or bolt must be installed

2012.0 RANGE ROVER (LM), 204-02

REAR SUSPENSION

LOWER ARM BALL JOINT (G836580)

REMOVAL AND INSTALLATION

64.15.08	BALL JOINT - LOWER - LEFT /EACH - RENEW	ALL DERIVATIVES	0.8	USED WITHINS	

SPECIAL TOOL(S)



204-516/1(LRT-64-026/1)

Ball joint remover/installer



204-516/2(LRT-64-026/2)

Ball joint remover/installer



204-516/3(LRT-64-026/3)

Ball joint remover/installer



204-516/4(LRT-64-026/4)

Ball joint remover/installer

REMOVAL

1. Remove the tie rod.

   For additional information, refer to: Toe Link (204-02 Rear Suspension, Removal and Installation).

2. 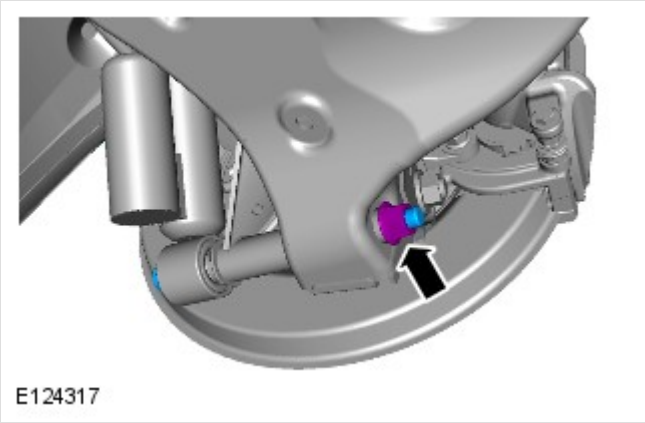

   Position jack under damper mounting bracket to support lower arm.

   Release the damper from the lower arm.

   Remove the nut and bolt.

3.

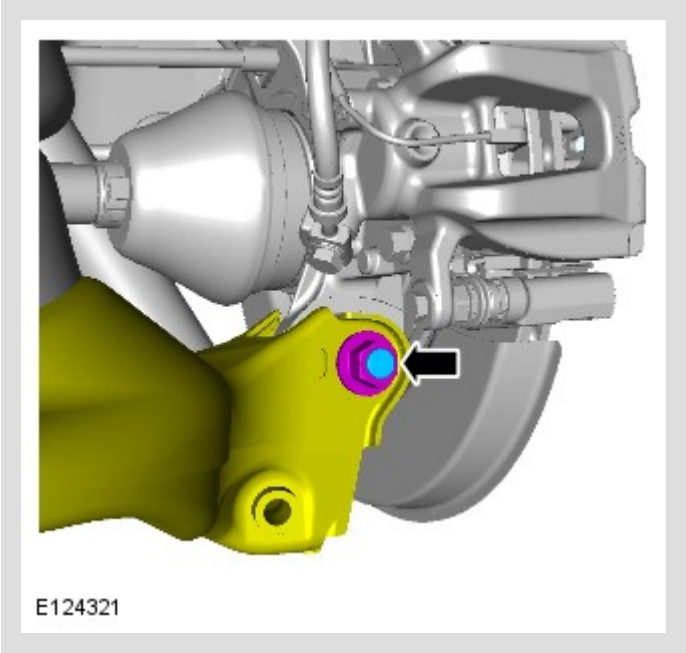

Remove and discard nut and bolt securing lower arm to hub.

4. Lower support jack.

5. Release hub from lower arm and support to give access to ball joint.

6.

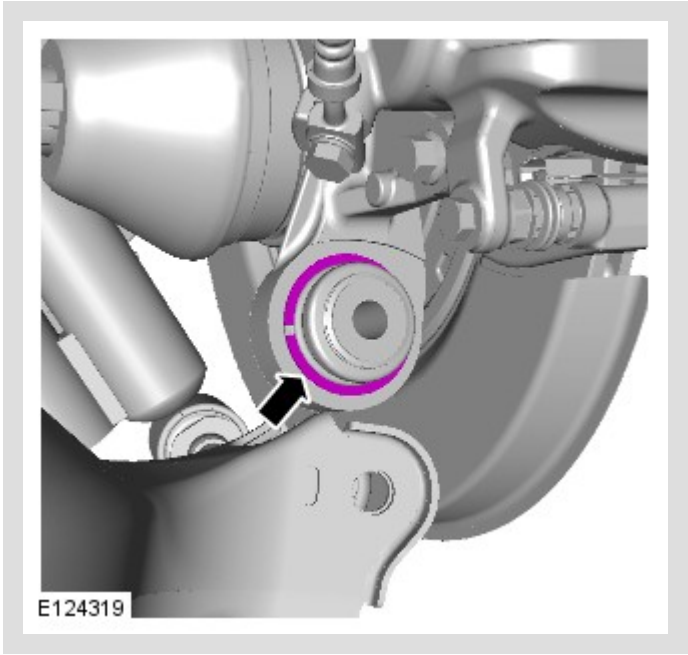

Remove and discard the circlip.

7.

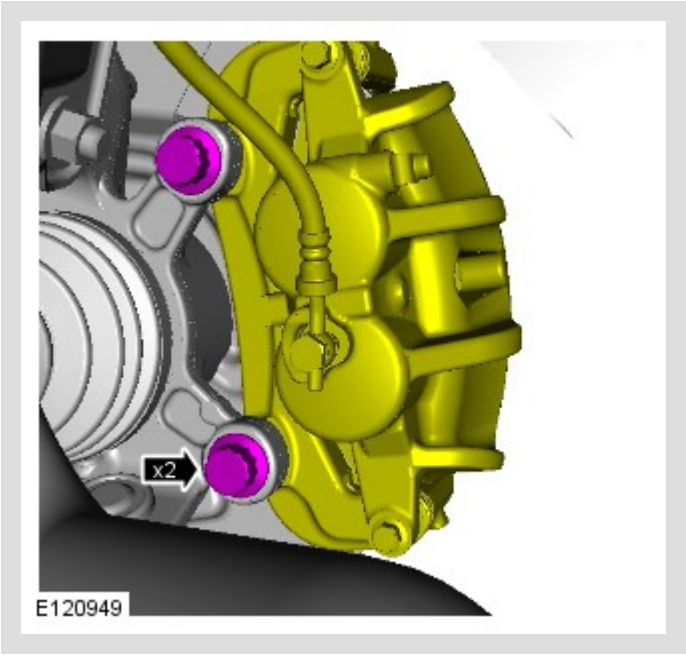

Remove 2 bolts securing brake caliper to hub. Release caliper from hub and tie aside.

8. Remove Allen screw securing brake disc to drive flange.

9. Remove the brake disc.

10. Remove lower bolt securing brake disc backplate to hub for access.

11. 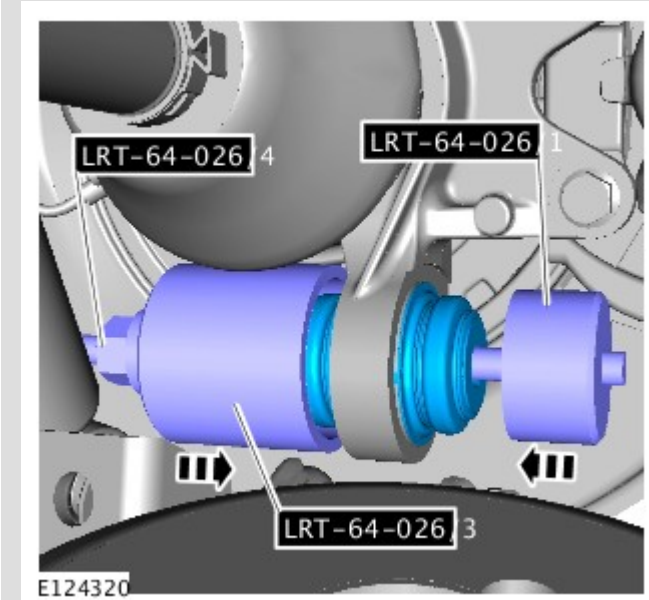

Remove ball joint using LRT-64-026/1 with LRT-64-026/3. (RH side illustrated)

INSTALLATION

1. Clean ball joint and location in hub.

2.

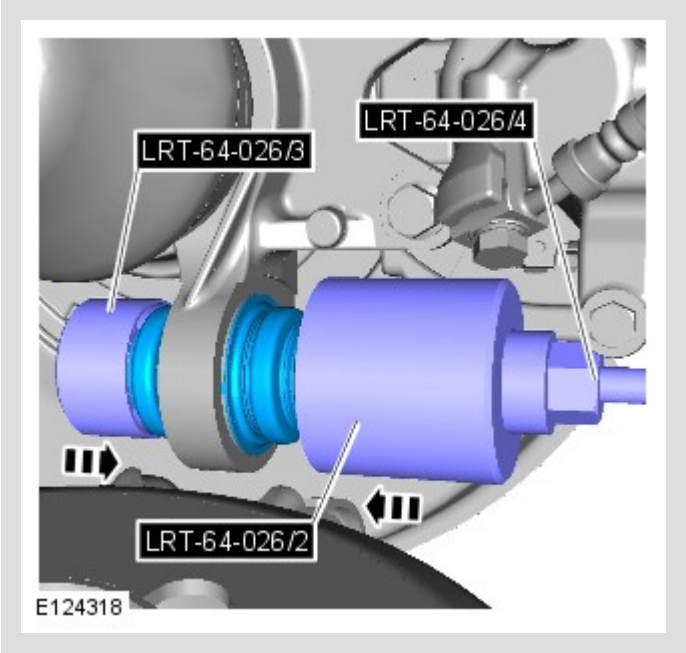

Fit ball joint with circlip groove facing towards rear using LRT-64-026/3 with LRT-64-026/2

3. Fit new circlip.

4. Clean lower arm and hub mating faces.

5. Align hub to lower arm, fit new nut and bolt.

   Tighten the bolt to 250Nm (184 lb.ft)

6. Install the bolt securing the brake disc backplate to hub.

   Tighten bolt to 10Nm (7 lb.ft)

7. Ensure mating surfaces of disc and drive flange are clean.

8. Install the disc to the flange, install the screw.

   Tighten screw to 16Nm (12 lb.ft)

9. Install the caliper to the rear hub.

   Tighten bolts to 65Nm (48 lb.ft)

10. Secure the spring and damper assembly to the lower arm.

    Tighten the bolt to 110 Nm (81 lb.ft).

11. Fit tie rod.
    For additional information, refer to: Toe Link (204-02 Rear Suspension, Removal and Installation).

12. Check, and if necessary, adjust the wheel alignment.
    For additional information, refer to: Four-Wheel Alignment (204-00 Suspension System - General Information, General Procedures).

REAR SUSPENSION

LOWER ARM BUSHING (G836592)

REMOVAL AND INSTALLATION

SPECIAL TOOL(S)

	**204-518** Remover/Installer (LRT-64-028)

REMOVAL

1. Raise and support the vehicle.

2. Remove the rear wheels and tires.

3. Remove the lower arms.

   For additional information, refer to: Lower Arm (204-02, Removal and Installation).

4. 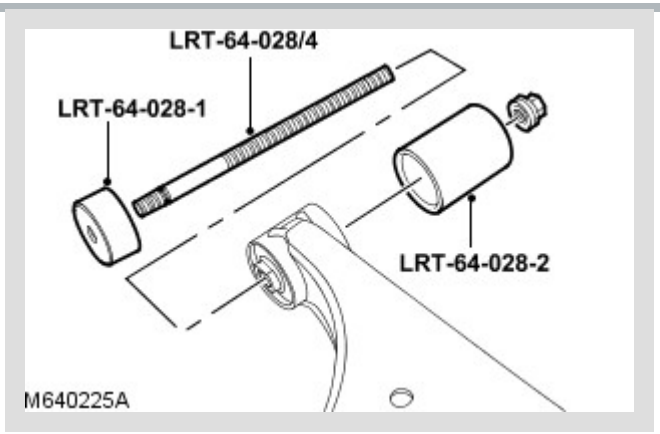

   Using the special tools, remove the LH lower arm bushes.

5. Repeat the procedure for the RH side.

INSTALLATION

1.

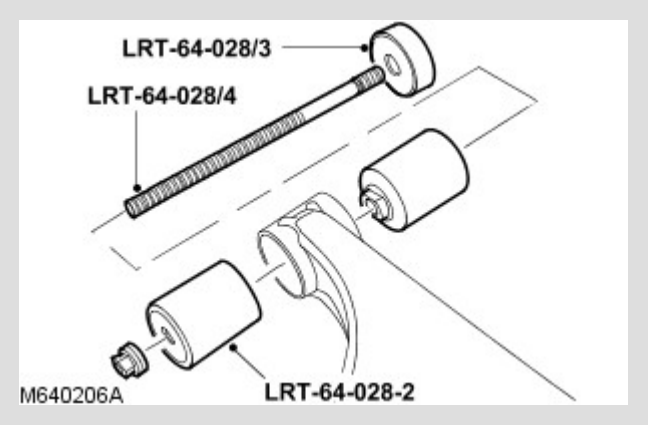

Using the special tools, install the LH lower arm bushes.

2. Repeat the procedure for the RH side.

3. Install the lower arms.

   For additional information, refer to: Lower Arm (204-02, Removal and Installation).

4. Install the rear wheels and tires.

   Tighten the wheel nuts to 140 Nm (103 lb.ft).

2012.0 RANGE ROVER (LM), 204-02

REAR SUSPENSION

REAR SHOCK ABSORBER (G1307934)

REMOVAL AND INSTALLATION

64.30.02	DAMPER - ONE SIDE - RENEW	ALL DERIVATIVES	0.7	USED WITHINS

REMOVAL

CAUTIONS:

- Do not depressurise the air suspension system before raising the vehicle.
- The weight of the vehicle must be supported before the suspension is depressurised.

NOTES:

- RH illustration shown, LH is similar.
- Removal steps in this procedure may contain installation details.

All vehicles

1.



2.

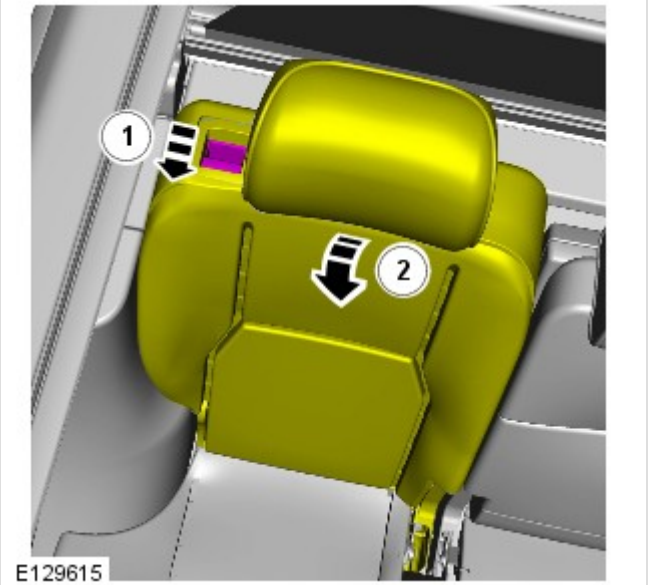

3. **WARNING:**

Make sure to support the vehicle with axle stands.

Raise and support the vehicle.

4. Remove the RH rear wheel and tire.

- *Torque:* **140 Nm**

5. **CAUTION:**

   Do not allow the suspension arm to hang unsuported on the air suspension spring.

Position jack under damper mounting bracket to support lower arm.

6. **NOTE:**

   It is not necessary to depressurise the whole system, only the side from which the suspension component is being replaced.

Refer to: Air Suspension System Depressurize and Pressurize (204-05, General Procedures).

	Vehicles with active damping

1.



All vehicles

1.

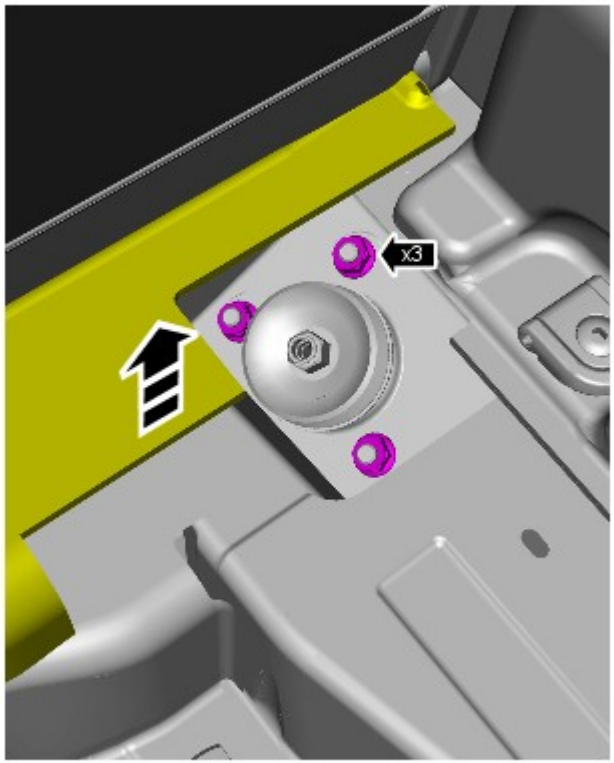

E129616

Torque: **60 Nm**

2.

NOTE:

Align to the orientation noted on removal.

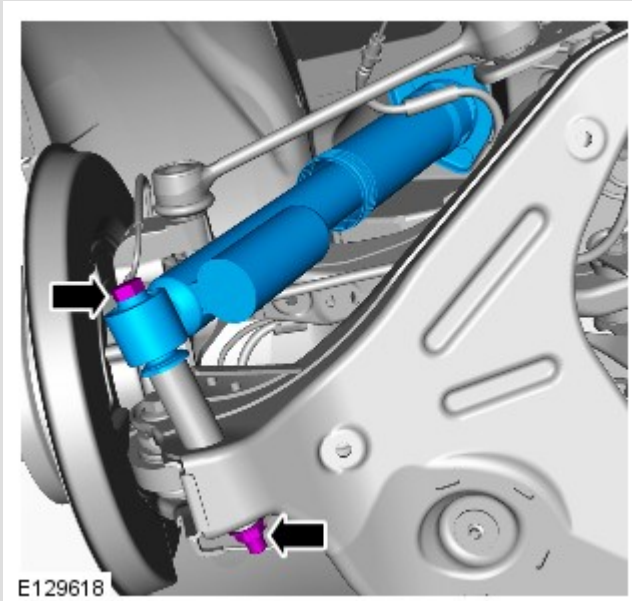

Torque: **90 Nm**

3.

CAUTION:

Make sure that a new component is installed.

NOTE:

Do not disassemble further if the component is removed for access only.



INSTALLATION

1. To install, reverse the removal procedure.

2012.0 RANGE ROVER (LM), 204-02

REAR SUSPENSION

REAR STABILIZER BAR LINK (G836588)

REMOVAL AND INSTALLATION

64.35.24	LINK - STABILIZER BAR - RENEW	ALL DERIVATIVES	0.3	USED WITHINS	

REMOVAL

1.

⚠ WARNING:

Do not work on or under a vehicle supported only by a jack. Always support the vehicle on safety stands.

Raise the rear of the vehicle.

2. Remove the wheel and tire.

3. **CAUTION:**

Note the fitted position of the special washer.

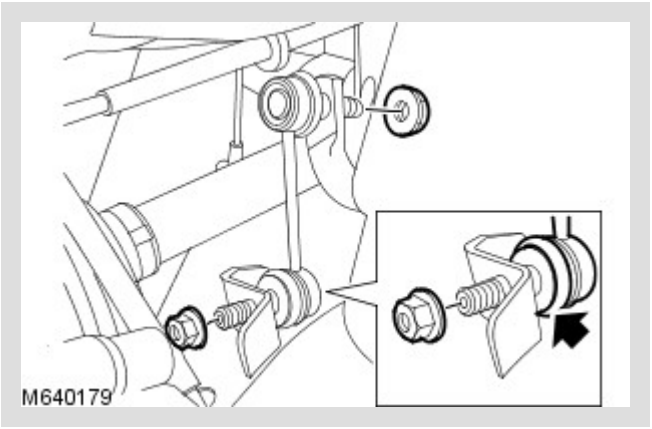

Remove the stabilizer bar link.

Remove the 2 nuts.

Collect the washer.

INSTALLATION

1. Install the stabilizer bar link.

   Install the special washer.

   Tighten the nuts to 100 Nm (74 lb.ft).

2. Install the wheel and tire.

   Tighten the wheel nuts to 140 Nm (103 lb.ft).

2012.0 RANGE ROVER (LM), 204-02

REAR SUSPENSION

REAR STABILIZER BAR (G836583)

REMOVAL AND INSTALLATION

64.35.08	STABILIZER BAR - RENEW	AJ V8, SUPERCHARGED	1.3	USED WITHINS

REMOVAL

1.

WARNING:

Make sure to support the vehicle with axle stands.

Raise and support the vehicle.

2. Remove the LH rear air spring.
For additional information, refer to: Rear Air Spring (204-05 Vehicle Dynamic Suspension, Removal and Installation).

3. Disconnect the battery ground cable.
For additional information, refer to: Specifications (414-00, Specifications).

4. Remove the exhaust system.
For additional information, refer to: Exhaust System (309-00, Removal and Installation).

5. **NOTES:**

- LH illustration shown, RH is similar.
- Use an additional wrench to prevent the ball joint rotating.

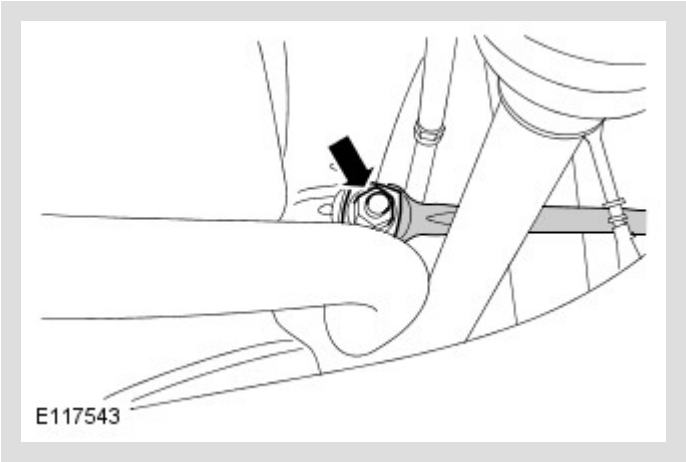

Release the stabilizer bar links from the stabilizer bar.

Remove the stabilizer bar link nut.

Repeat procedure for the other side.

6.

NOTES:

- RH illustration shown, LH is similar.
- Note the fitted position of the stabilizer bar and bushings to aid installation.

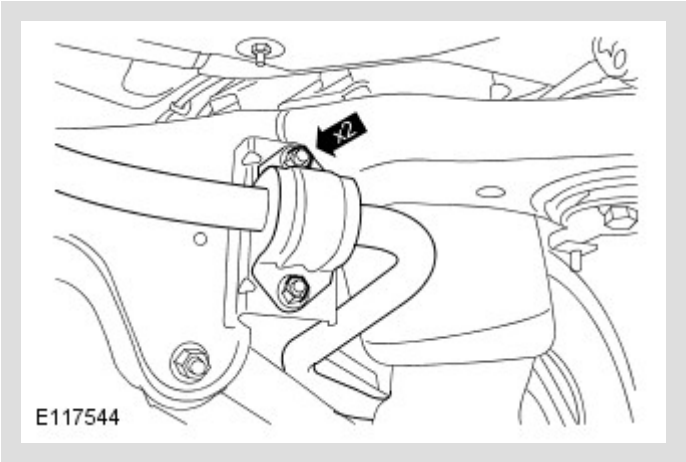

Remove the stabilizer bar.

Remove the 2 nuts.

Repeat procedure for the other side.

INSTALLATION

1. Install the stabilizer bar.

   Stage 1: 56 Nm.

Stage 2: 56 Nm.

2. **NOTE:**

   Use an additional wrench to prevent the ball joint rotating.

   Connect both rear stabilizer bar links to the stabilizer bar.

   Tighten the nuts to 100 Nm.

3. Install the exhaust system.
   For additional information, refer to: Exhaust System (309-00, Removal and Installation).

4. Connect the battery ground cable.
   For additional information, refer to: Specifications (414-00, Specifications).

5. Install the LH rear air spring.
   For additional information, refer to: Rear Air Spring (204-05 Vehicle Dynamic Suspension, Removal and Installation).

2012.0 RANGE ROVER (LM), 204-02

REAR SUSPENSION

DIAGNOSIS AND TESTING

For additional information.

REFER to: Suspension System (204-00, Diagnosis and Testing).

REAR SUSPENSION

DESCRIPTION AND OPERATION

REAR SUSPENSION

Rear Suspension Components

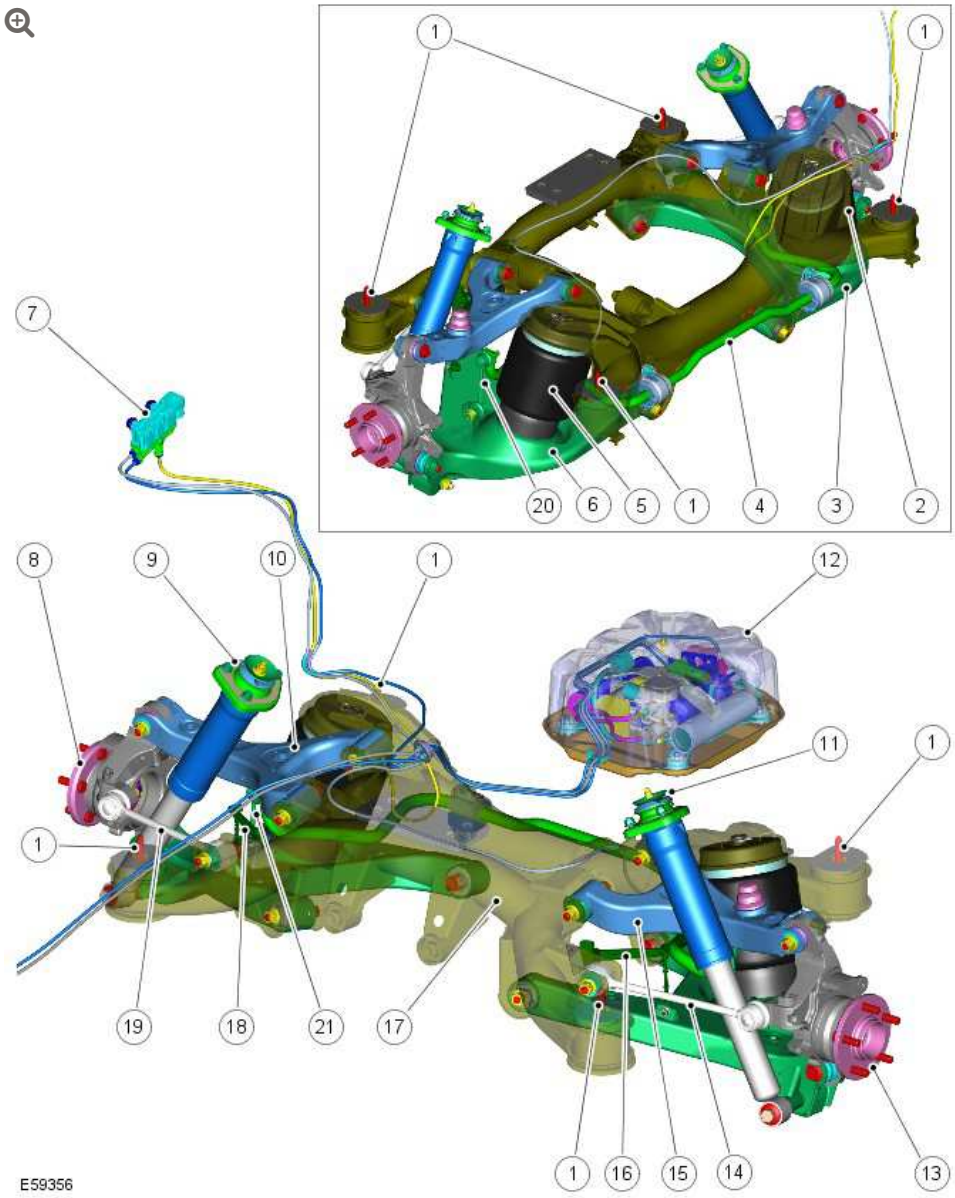

ITEM	DESCRIPTION
1	Subframe mounts
2	right-hand (RH) air spring
3	RH lower wishbone
4	Stabilizer bar
5	left-hand (LH) air spring
6	LH lower wishbone
7	Rear cross link valve
8	RH rear hub assembly

ITEM	DESCRIPTION
9	RH damper
10	RH upper wishbone
11	LH damper
12	Compressor assembly
13	LH rear hub assembly
14	LH toe control arm
15	LH upper wishbone
16	LH rear height sensor
17	Rear subframe
18	RH rear height sensor
19	RH toe control arm
20	LH stabilizer bar link
21	RH stabilizer bar link

The independent rear suspension arms have been designed for maximum ground clearance. Wheel alignment can be adjusted for camber and toe-in using eccentric bolts.

The following wheel travels are shown for on road and off-road vehicle operation. The difference between the two operating conditions is a result of operation of the rear cross-link valve. When the cross-link valve is opened the suspension travel is as given for off-road wheel travel. When the cross-link valve is closed the suspension travel given for on road applies.

The off road mode wheel travel is:

- 190 mm bump
- 140 mm rebound
- This gives a total of 330 mm off road suspension travel.

The on road standard height wheel travel is:

- 140 mm bump
- 190 mm rebound
- This gives a total of 330 mm on road suspension travel.

NOTE:

> Overall wheel travel stated above will still be achieved when both wheels are moving in parallel together.

The rear suspension comprises:

- Two dampers
- Two air springs
- Subframe
- Two upper wishbones
- Two lower wishbones
- Two toe control arms
- Stabilizer bar
- Two stabilizer bar links
- Two hub assemblies.

DAMPERS

The rear dampers are unique to Range Rover and are of a mono-tube design manufactured by Bilstein. The mono-tube design gives the following advantages over conventional twin tube dampers:

- Lightweight construction
- Excellent high frequency response

- Consistent performance - mono-tube design eliminates fluid aeration and emulsification
- Larger diameter piston produces increased fluid displacement for a given damper stroke resulting in more accurate damping control.

The damper comprises a single tube which forms the operating cylinder. The lower end of the cylinder has an eye which accepts the bush for mounting to the lower wishbone. A piston and rod slides inside the cylinder. The rod emerges from the top of the cylinder which is fitted with a rod guide and a seal.

A dust cover is fitted to the top of the piston rod and protects the rod from damage. A bump stop is fitted to the top of the piston rod, under the dust cover, and protects the damper from full travel impacts. A top mount is attached to the top of the piston rod and is secured with a flanged nut. A hardened washer is fitted between the shoulder on the piston rod and the bump washer which is fitted inside the dust cover. When the damper is removed and replaced, care must taken to ensure that the correct hardened washer is refitted in the correct position. The washer prevents the piston rod shoulder causing damage to the bump washer.

The piston is fitted with reed valves which cover a series of holes, through which oil can pass. A chamber at the base of the damper is sealed by a free floating piston. The chamber is filled with inert gas. When the damper is assembled and filled with oil, the gas is in a compressed condition below the piston. On the bump stroke, the downward movement of the piston displaces oil from the full area (bottom) of the cylinder to the cylinder annulus (top). The energy required to pump the oil through the piston drillings and reed valves creates the damping action.

As the piston moves downwards, the volume available on the annulus side of the piston is less than required by the displaced oil from the full area side. When this occurs, the free floating piston moves

downwards, further compressing the gas and providing the additional volume for the displaced oil and further enhancing the damping process.

The dampers are located between the lower wishbone and the vehicle body. The lower mounting is fitted with a bush which provides for the attachment to the wishbone with a bolt and nut. The damper top mounting is located in a turret in the body and secured to the body with three nuts. A paper gasket is located between the damper top mounting and the body and prevents the ingress of dirt and moisture into the mounting studs and corresponding holes in the body. It is important that this gasket is discarded and replaced with a new item when the damper is removed.

NOTE:

> The dampers fitted to TDV8 vehicles differ to the dampers fitted to petrol vehicles to compensate for the extra weight and handling characteristics of the vehicle.

AIR SPRINGS

Each air spring comprises a top plate assembly, an air bag and a base piston. The air bag is attached to the top plate and the piston with a crimped ring. The air bag is made from a flexible rubber material which allows the bag to expand with air pressure and deform under load. The top plate assembly comprises the plastic top plate with a spigot which protrudes through a hole in the subframe. On the side of the top cap is a connector which allows for the attachment of the air hose from the cross-link valve. The piston is made from plastic and is shaped to allow the air bag to roll over its outer diameter. The base of the piston has a splined stud in the center and an offset timing peg for correct orientation of the air spring into the lower wishbone.

The air springs are located rearward of the dampers and are retained between the subframe and the lower wishbone. The air spring is attached to the lower wishbone with a screw which is fitted from the underside of the wishbone into the splined stud on the base of the piston. The air spring top plate is attached to the subframe via an integral 'D' shaped spigot which is secured with a retaining clip.

NOTE:

The air spring fitted to TDV8 vehicles differs to the air spring fitted to petrol vehicles to compensate for the extra weight of and handling characteristics the vehicle.

SUBFRAME

The subframe is fabricated from steel tubing to provide a robust platform for the mounting of the suspension and the rear differential. The subframe is attached to the vehicle body via four, voided rubber mounts.

Two bushes at the front of the subframe and one at the rear allow for the attachment of the rear differential. Additional brackets, bolted to the subframe, allow for the attachment of the height sensors. The stabilizer bar is attached across the rear of the subframe and is mounted in flexible bushes which are secured with 'D' shaped clamps.

UPPER AND LOWER WISHBONES

Upper Wishbone

The steel fabricated upper wishbone has two bushes pressed into housings which provide for the attachment to the subframe. The bushes are located between brackets on the subframe and are secured with bolts and nuts. The outer end of the upper wishbone has two brackets with slotted holes. A boss on the hub is fitted with a ball joint which locates between the brackets and is secured with an

eccentric bolt, washer and nut. This allows for the adjustment of the rear wheel camber. Rotation of the bolt moves the eccentric head against a recessed slot in the bracket, moving the location of the hub in the upper wishbone slots, allowing the camber to be adjusted to within the set limits. A rubber bump stop is fitted centrally on the upper wishbone to cushion the wishbone movement when the suspension is at the extremes of its travel.

Lower Wishbone

The lower wishbone is larger than the upper wishbone and is a steel fabrication. Two bushes are pressed into the wishbone and provide for the attachment to the subframe. The bushes are located between brackets on the subframe and secured with bolts and nuts. The lower wishbone has a platform which provides for the attachment of the air spring. A welded bracket allows for the attachment of the anti-roll bar link. A boss on the hub is fitted with a ball joint which locates between brackets on the lower wishbone. The hub is secured to the lower wishbone with a bolt and nut. A bracket with a tubular extension provides for the attachment of the damper lower mounting.

TOE CONTROL ARMS

The toe control arm is a forged steel component. One end is fitted with a taper ball joint and the opposite end has a bush pressed into an integral housing.

The bush locates between brackets on the subframe and is secured with a special eccentric bolt, washer and nut. This allows for the adjustment of the rear wheel toe-in. Rotation of the bolt moves the eccentric head within a recessed slot in the bracket, allowing the toe-in to be adjusted within the set limits.

The taper ball joint locates in a tapered hole in the hub and is secured with a nut.

STABILIZER BAR AND LINKS

The stabilizer bar is fabricated from 26.5 mm diameter, solid spring steel. The stabilizer bar operates, via a pair of links, from a bracket on the upper face of each lower arm.

The stabilizer bar is attached to the rear of the subframe with two bushes which are bonded to the bar and cannot be removed. Clamp plates are pressed onto the bushes and must not be removed. The stabilizer bar is secured to the subframe with the clamp plates which are secured with bolts.

The ends of the stabilizer bar are attached to the lower arms via stabilizer bar links.

Each stabilizer bar link has a ball joint fitting mounted at 90° to the axis of the link at each end which improves response and efficiency. The top ball joint attaches to the stabilizer bar and is secured with a nut. The lower ball joint attaches to the lower wishbone and is secured with a nut. The ball joints on the stabilizer bar links are not serviceable and if replacement of either is necessary, a new stabilizer bar link will be required.

A hardened steel washer is fitted between the lower ball joint and the bracket on the lower wishbone. The hardened washer prevents the ball joint damaging the bracket which could lead to loosening of the nut torque. When the link is removed it is important to ensure that the correct hardened washer is replaced in the correct position.

HUB ASSEMBLY

The hub assembly comprises a wheel hub, drive flange and bearing. A seal and bearing are fitted in the wheel hub and are secured with a circlip. The drive flange has wheel studs attached to it and locates on the splined drive shaft and is secured with a stake nut.

The cast wheel hub has a vertical boss with a cross hole. A ball joint is pressed in the hole and provides the attachment point for the upper

wishbone. The upper wishbone is secured to the wheel hub with a bolt and nut. An additional boss with two cross holes provide location for the brake caliper.

A second vertical boss with a cross hole at the bottom of the wheel hub provides for the attachment of the lower wishbone. A ball joint is pressed in the hole and the lower wishbone is secured with a bolt and nut. A further tapered hole in the wheel hub allows for the attachment of the toe control arm ball joint.

A hole is machined in the wheel hub at 90° to the hub bearing. This hole allows for the fitment of the anti-lock brake system (ABS) wheel speed sensor which is secured with a screw into an adjacent threaded hole. The speed sensor reads off a target which is part of the drive shaft assembly.

2012.0 RANGE ROVER (LM), 204-02

REAR SUSPENSION

TOE LINK (G1610242)

REMOVAL AND INSTALLATION

64.35.09	TIE-ROD - RENEW	ALL DERIVATIVES	0.3	USED WITHINS

REMOVAL

CAUTION:

Calibration of the air suspension system must be carried out if the suspension height sensor is loosened or removed.

1.

WARNING:

Do not work on or under a vehicle supported only by a jack. Always support the vehicle on safety stands.

Raise and support the vehicle.

2. Remove the wheel and tire.

3. **NOTE:**

Discard the nut.

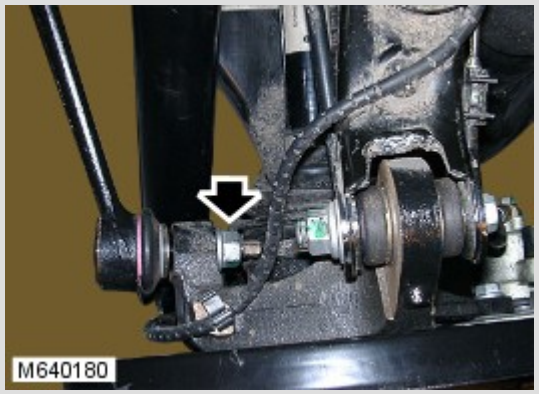

Release the toe link from the wheel knuckle.

Remove the nut.

4.

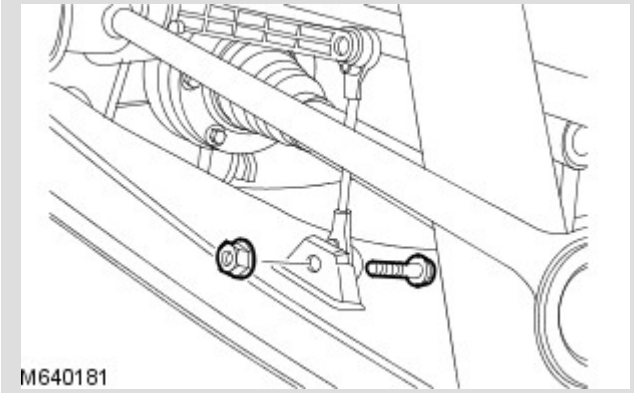

Release the height sensor link.

Remove the nut and bolt.

5.

CAUTION:

Make sure that the wiring harness into the back of the electrical connector is not pulled tightly and exits the electrical connector with a good bend radius.

NOTE:

There should be 25 to 50mm of un-taped wiring out of the back of the connector. If the taping goes closer to the connector than this then the excess should be removed.

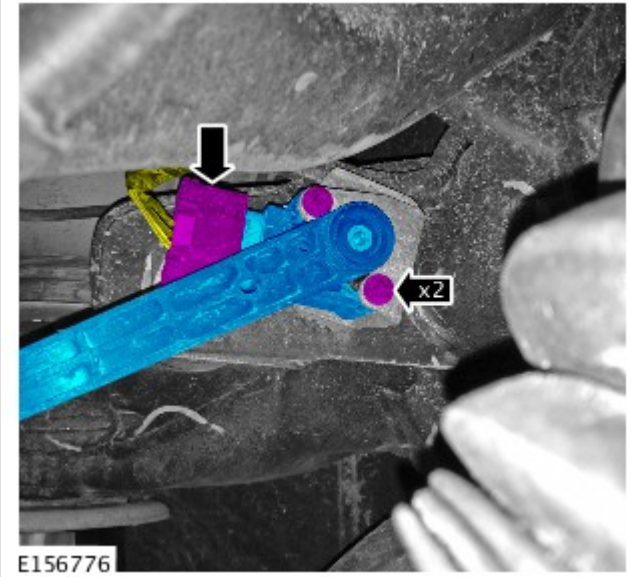

Remove the height sensor.

Disconnect the electrical connector.

Remove the retaining bolts.

6.

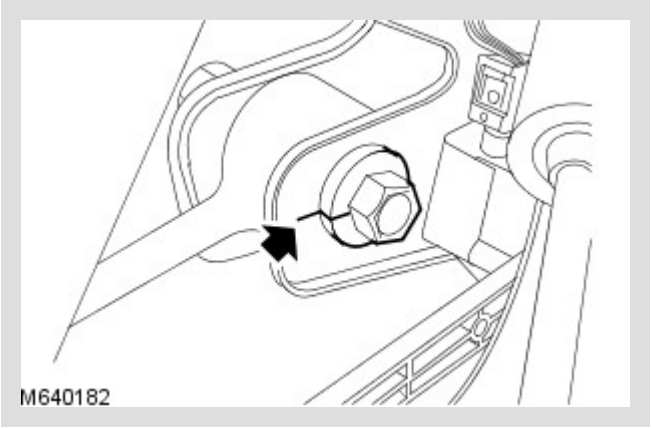

Mark the position of the bolt.

7. Remove the toe link.

Remove and discard the bolt.

Collect the special washer.

INSTALLATION

1.

CAUTION:

Only tighten the nuts and bolts when the suspension is in the normal drive position.

Install the toe link.

Install a new bolt.

Align the bolt to the marks made previously.

Install the special washer.

Tighten the nut and bolt to 165 Nm (121 lb.ft).

2. Secure the toe link to the wheel knuckle.

   Tighten the nut to 165 Nm (121 lb.ft).

3. Install the height sensor.

   Install the retaining bolts and tighten to 2.5 Nm.

   Connect the electrical connector.

4. Secure the height sensor link.

   Tighten the nut and bolt to19 Nm (14 lb.ft).

5. Install the wheel and tire.

Tighten the wheel nuts to 140 Nm (103 lb.ft).

6. Using the Land Rover approved diagnostic system, calibrate the suspension ride height.
   For additional information, refer to: Ride Height Adjustments (204-05 Vehicle Dynamic Suspension, General Procedures).

7. Check, and if necessary, adjust the wheel alignment.

REAR SUSPENSION

UPPER ARM - V8 5.0L PETROL/V8 S/C 5.0L PETROL (G1234453)

REMOVAL AND INSTALLATION

64.35.60	ARM ASSEMBLY - UPPER - ONE SIDE - RENEW	5000 CC, AJ V8	1.4	USED WITHINS

REMOVAL

1. Raise and support the vehicle.

2. Remove the exhaust system.
   For additional information, refer to: Exhaust System (309-00, Removal and Installation).

3. Remove the wheel and tire.

4. Using the Land Rover approved diagnostic system, depressurize the air suspension.
For additional information, refer to: Air Suspension System Depressurize and Pressurize (204-05, General Procedures).

5. 

Release the anti-lock brake system (ABS) wiring harness.

Release the 3 clips.

6. Release the brake pipe.

Remove the 2 bolts.

7.

NOTE:

Some variation in the illustrations may occur, but the essential information is always correct.

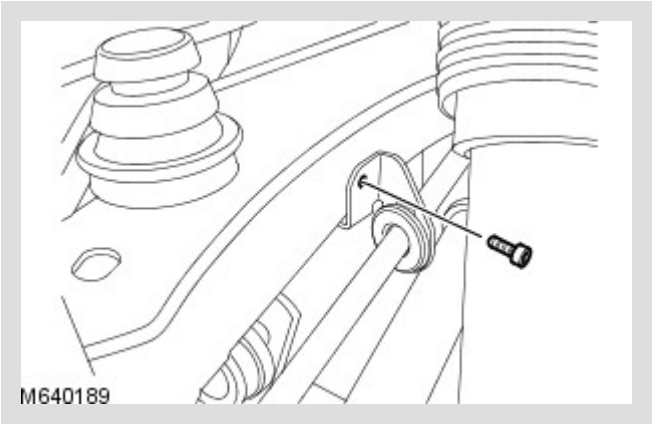

Release the parking brake cable.

Remove the bolt.

8. Using a suitable hydraulic jack, support the lower arm.

9. **CAUTION:**

Note the position of the bolt.

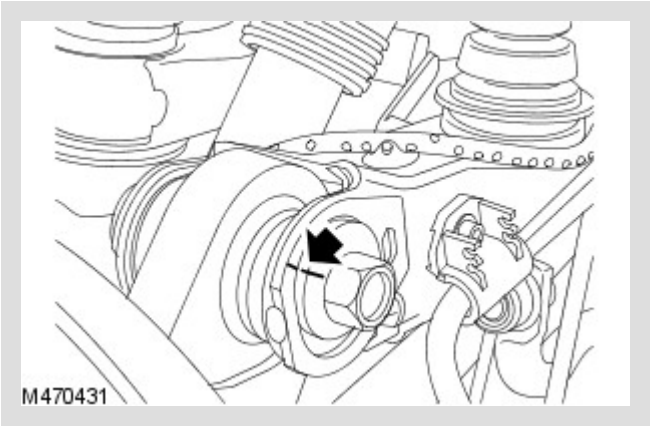

Release the wheel knuckle from the upper arm.

Remove and discard the nut and bolt.

10.

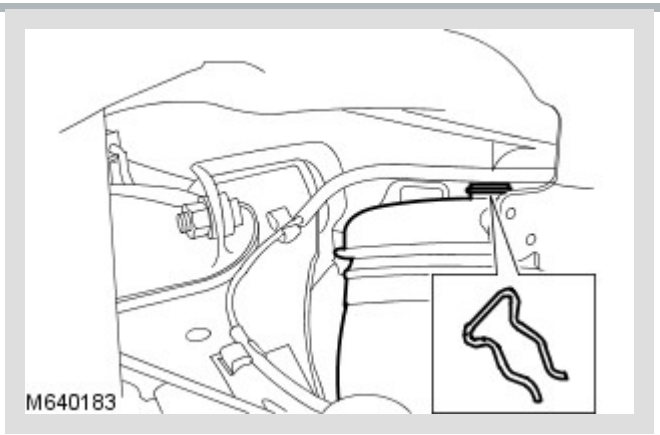

Release the air suspension spring.

Remove the clip.

11.

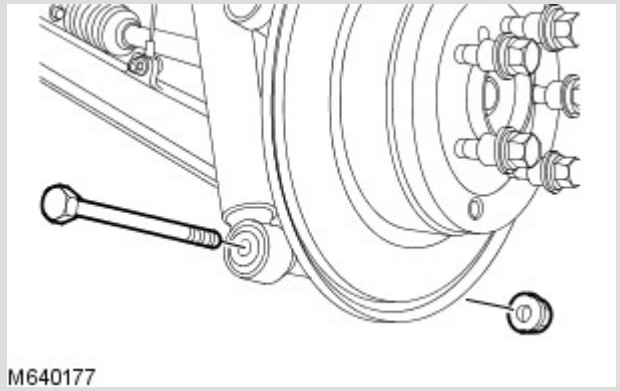

Release the rear shock absorber from the lower suspension arm.

Remove the bolt.

12. Using a suitable hydraulic jack, support the rear subframe.

13.

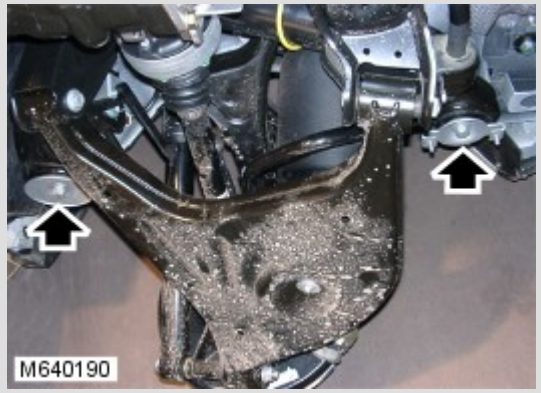

Release the rear subframe.

Remove the 2 bolts.

14. Lower the subframe to a maximum of 75mm (2.95 inches).

Remove the 2 washers.

15. 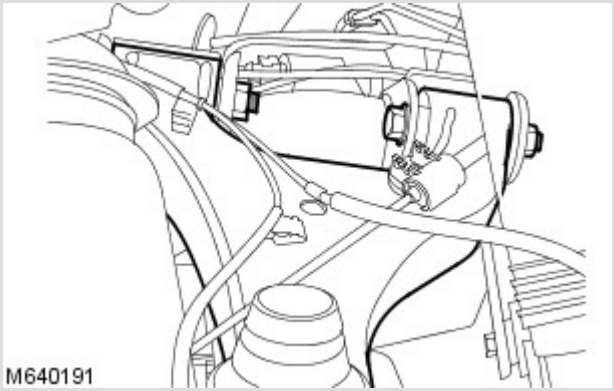

Remove the upper arm.

Remove the 2 bolts.

INSTALLATION

1. **CAUTION:**

Only tighten the nuts and bolts when the suspension is in the normal drive position.

Install the upper arm.

Tighten the bolts to 165 Nm (122 lb.ft).

2. Secure the rear subframe.

   Install the washers.

   Tighten the bolts to 180 Nm (133 lb.ft).

3. Secure the rear shock absorber to the lower suspension arm.

   Tighten the nuts and bolts to 90 Nm (66 lb.ft).

4. Secure the air suspension spring.

   Install the clip.

5. **CAUTION:**

   Only tighten the nuts and bolts when the suspension is in the normal drive position.

   Secure the wheel knuckle to the upper arm.

   Install a new nut and bolt, and tighten to 165 Nm (122 lb.ft).

6. Secure the parking brake cable.

   Tighten the bolt to 5 Nm (4 lb.ft).

7. Secure the brake pipe.

   Tighten the bolts to 5 Nm (4 lb.ft).

8. Secure the ABS harness.

   Secure the clips.

9. Using the Land Rover approved diagnostic system, pressurize the air suspension.
   For additional information, refer to: Air Suspension System Depressurize and Pressurize (204-05, General Procedures).

10. Install the wheel and tire.

    Tighten the wheel nuts to 140 Nm (103 lb.ft).

11. Install the exhaust system.
    For additional information, refer to: Exhaust System (309-00, Removal and Installation).

REAR SUSPENSION

UPPER ARM BALL JOINT (G836579)

REMOVAL AND INSTALLATION

REMOVAL

1. **WARNING:**

   Do not work on or under a vehicle supported only by a jack. Always support the vehicle on safety stands.

   Raise rear of vehicle and support under body.

2. Remove road wheel.

3.

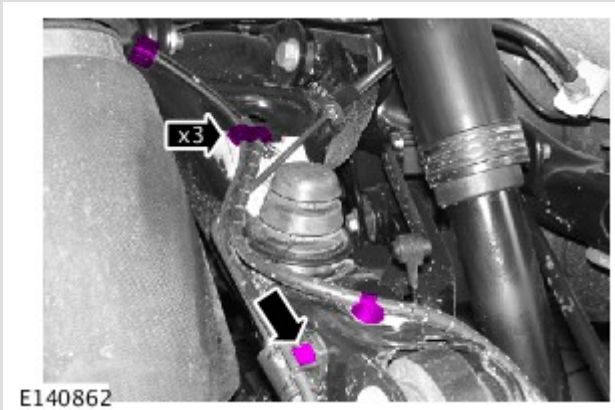

Release ABS sensor lead from upper arm.

4. Remove Allen screw securing brake pipe.

5. Position jack under damper mounting bracket to support lower arm.

6.

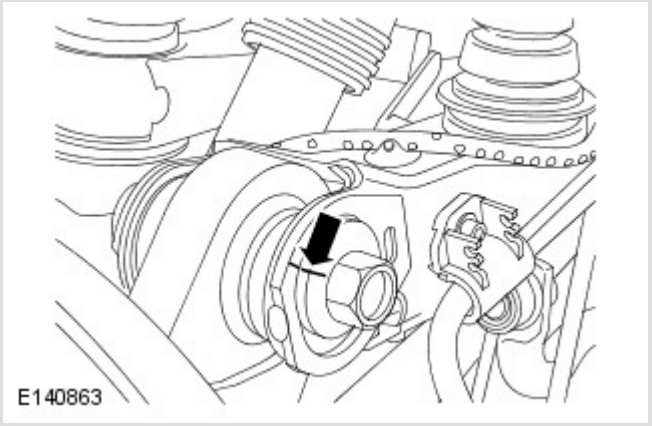

Reference mark eccentric in relationship to upper arm.

7. Remove and discard nut and bolt securing hub to upper arm. Release hub from arm.

8.

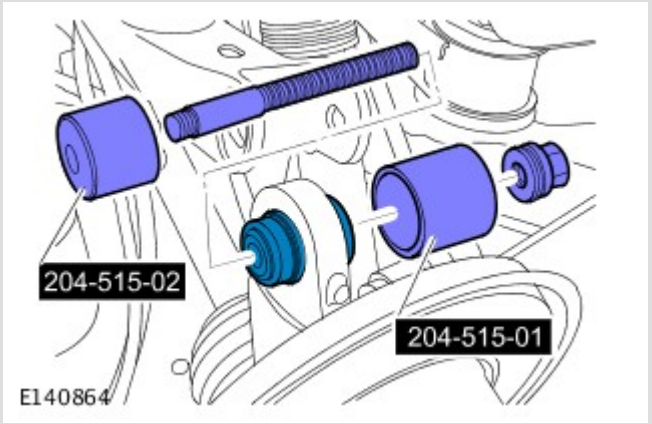

Remove ball joint using LRT-64-025/1 with LRT-64-025/2, (RH side illustrated).

INSTALLATION

1. Clean ball joint and location in hub.

2. 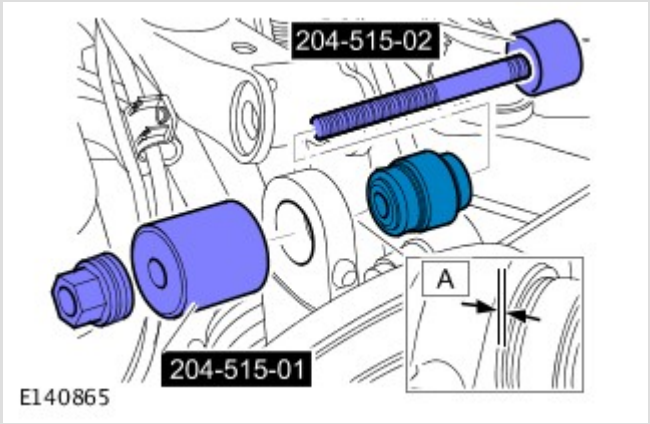

   Fit ball joint with chamfer facing towards rear using LRT-64-025/1 with LRT-64-025/2 to give protrusion 'A' from machined face. Protrusion 'A' = 0.75 mm (0.030 in.).

3. Align hub to upper arm, fit new nut and bolt, align eccentric to reference mark and lightly tighten.

4. Fit Allen screw securing brake pipe to upper arm and tighten to 5 Nm (3.7 lbf.ft).

5. Secure ABS sensor lead.

6. Fit road wheel and tighten nuts to 140 Nm (103 lbf.ft).

7. Lower vehicle.

8. Check wheel alignment.

9. Tighten bolt securing upper arm to hub to 165 Nm (121 lbf.ft).

REAR SUSPENSION

UPPER ARM BUSHING - V8 5.0L PETROL/V8 S/C 5.0L PETROL (G1234454)

REMOVAL AND INSTALLATION

SPECIAL TOOL(S)

 E84227	**204-514** Bush remover/installer

REMOVAL

1. Raise and support the vehicle.

2. Remove the wheel and tire.

3. Remove the upper arm.
For additional information, refer to: Upper Arm - 5.0L (204-02, Removal and Installation).

4. **NOTE:**

Secure the upper arm in a suitable vice.

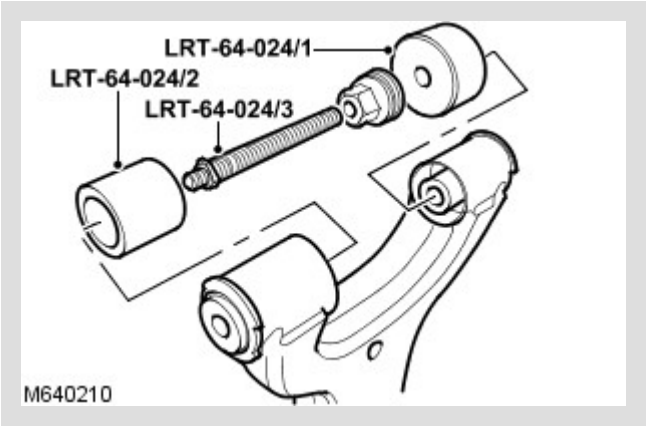

Using the special tools, remove the upper arm bushes.

INSTALLATION

1.

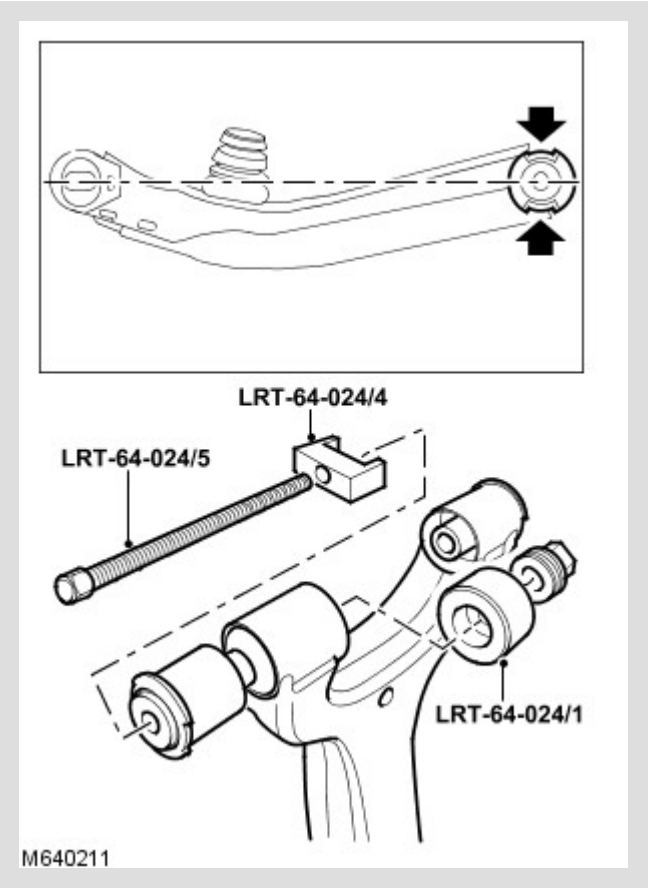

Using the special tools, install the upper arm bushes.

Align the bushes as shown.

2. Install the upper arm.

For additional information, refer to: Upper Arm - 5.0L (204-02, Removal and Installation).

3. Install the wheel and tire.

   Tighten the wheel nuts to 140 Nm (103 lb.ft).

2012.0 RANGE ROVER (LM), 204-02

REAR SUSPENSION

WHEEL BEARING AND WHEEL HUB (G1234455)

REMOVAL AND INSTALLATION

64.15.14	BEARING(S) - HUB - ONE SIDE - RENEW	ALL DERIVATIVES	2.6	USED WITHINS	

SPECIAL TOOL(S)



204-509-1(LRT-60-033/1)

Remover



204-509-2(LRT-60-033/2)

Remover



204-509-3(LRT-60-033/5)

Remover



204-509-4(LRT-60-033/6)

Remover



204-509-6(LRT-60-033/8)

Remover 2 off



204-509-7(LRT-60-033/9)

Remover



204-509/10(LRT-60-033/10)

Rear wheel bearing remover/installer



204-509-9(LRT-60-033/11)

Installer



(LRT-60-033/12)

Installer 204-509-8

REMOVAL

1.

WARNING:

Make sure to support the vehicle with axle stands.

Raise and support the vehicle.

2. Remove the rear wheels and tires

3. Remove the wheel knuckle.
For additional information, refer to: Wheel Knuckle (204-02, Removal and Installation).

4.

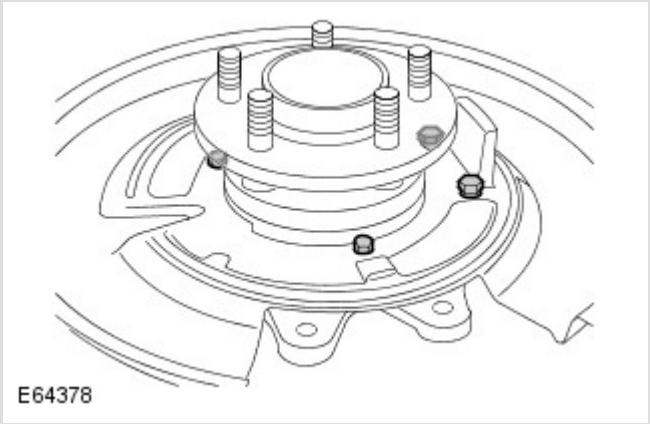

Release the brake disc shield.

Remove the 4 bolts.

5.

NOTE:

The bearing track will remain on the wheel hub.



Using the special tools, remove the wheel hub.

6.

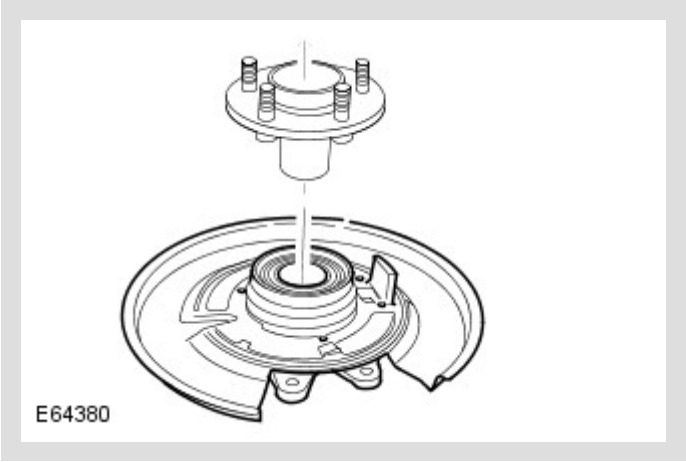

Remove the brake disc shield.

7. Remove the special tools.

8.

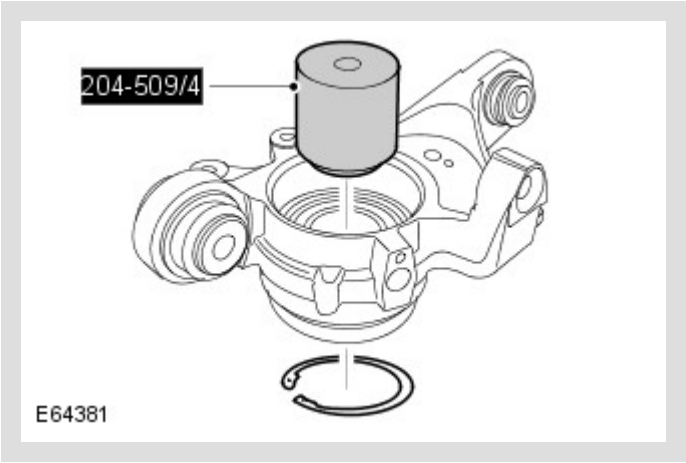

Using the special tools, press out the rear wheel bearing.

Remove and discard the circlip.

9.

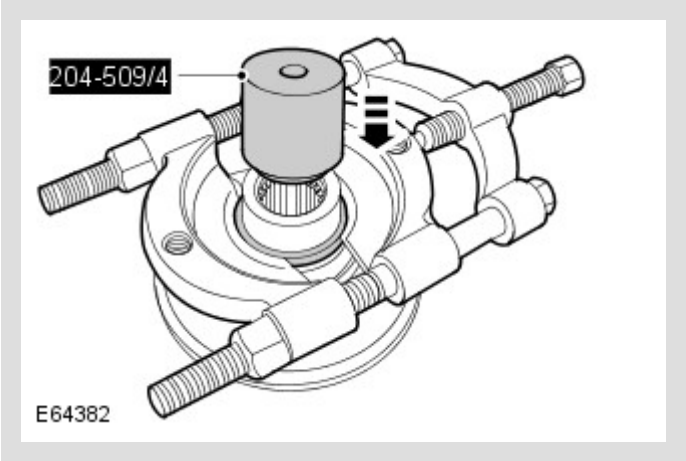

Using a bearing separator and the special tool, remove the rear wheel bearing inner track.

INSTALLATION

1.

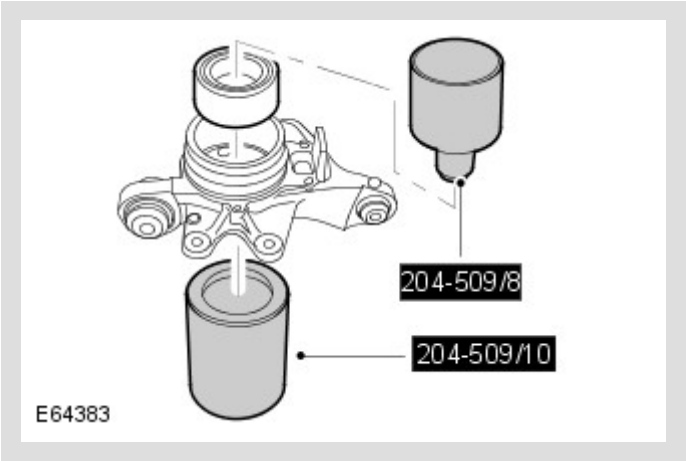

Using the special tools, install the rear wheel bearing.

Clean the component mating faces.

Install a new circlip.

2. Install the brake disc shield.

Clean the component mating faces.

Tighten the M8 bolts to 25 Nm (18 lb.ft).

Tighten the M6 bolts to 10 Nm (7 lb.ft).

3.

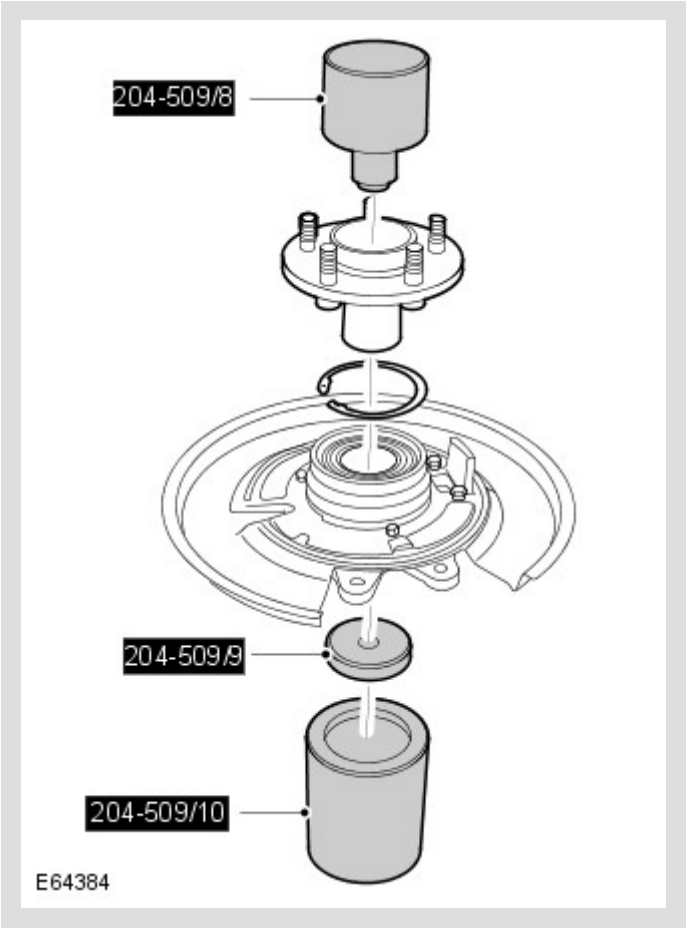

Using the special tools, press the wheel hub into the rear wheel bearing.

Clean the component mating faces.

4. Install the wheel knuckle.

For additional information, refer to: Wheel Knuckle (204-02, Removal and Installation).

5. Install the wheels and tires.

   Tighten the wheel nuts to 140 Nm (103 lb.ft).

2012.0 RANGE ROVER (LM), 204-02

REAR SUSPENSION

WHEEL KNUCKLE (G1234456)

REMOVAL AND INSTALLATION

SPECIAL TOOL(S)



204-506/1(LRT-60-030/1)

Halfshaft remover/replacer



204-506/2(LRT-60-030/2)

Halfshaft remover/replacer



204-506/3(LRT-60-030/3)

Halfshaft remover/replacer



204-506/5(LRT-60-030/5)

Retainers - halfshaft remover/replacer

	**204-506-01(LRT-60-030/4)** Halfshaft installer adapter

REMOVAL

NOTE:

If a new knuckle is installed a new wheel bearing must be installed.

1. **WARNING:**

   Make sure to support the vehicle with axle stands.

Raise and support the vehicle.

2. Remove the rear wheels and tires

3. 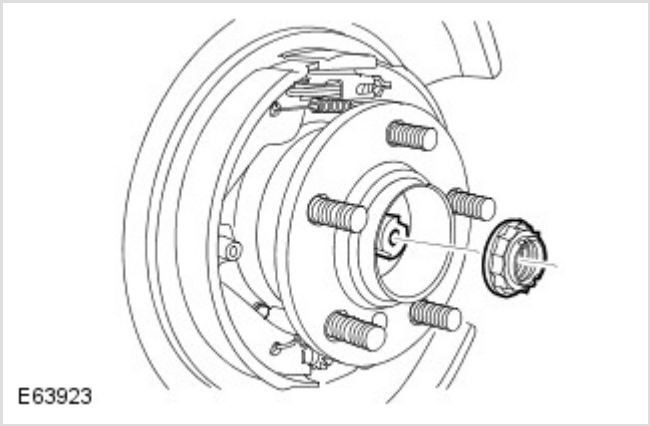

With assistance, remove and discard the halfshaft retaining nut.

Release the nut stake.

4. Remove the rear brake disc.
For additional information, refer to: Brake Disc (206-04 Rear Disc Brake, Removal and Installation).

5. **NOTE:**

Rotate the parking brake shoe retainers through 90 degrees to release them from the back plate.

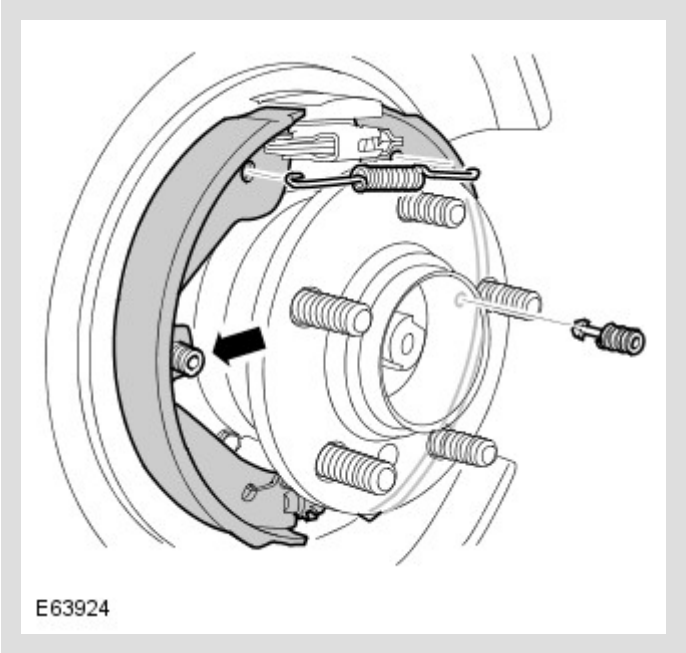

Remove the parking brake shoes as an assembly with the lower spring and the adjuster.

Remove the brake shoe upper return spring.

Remove both shoe retainers.

6.

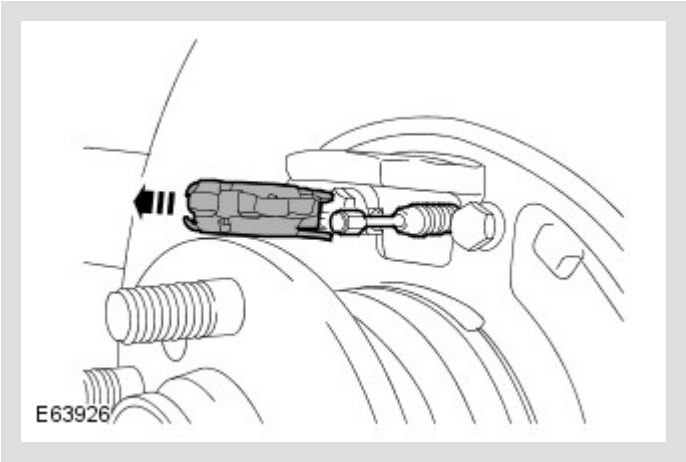

Remove the parking brake shoe expander.

7.

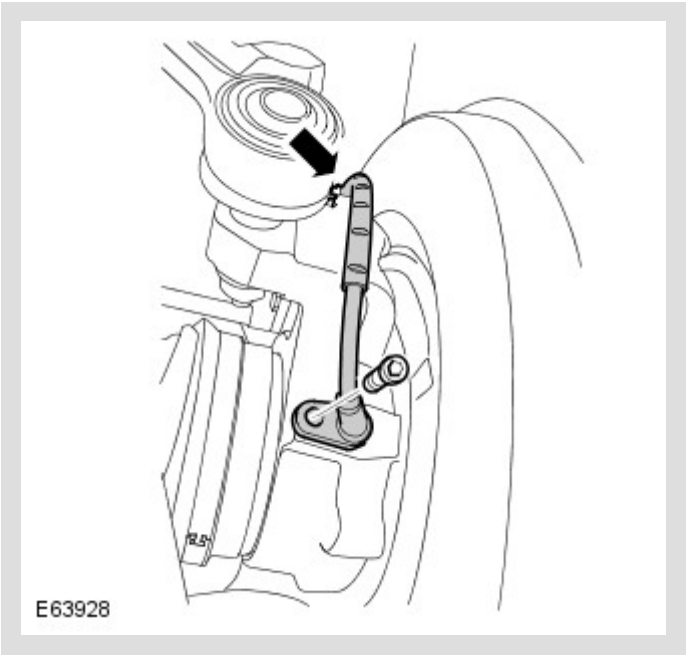

Disconnect the rear wheel speed sensor.

Release the clip.

Remove the Allen screw.

8. Release the parking brake cable clip.

Remove the Allen screw.

9.

NOTE:

Some variation in the illustrations may occur, but the essential information is always correct.

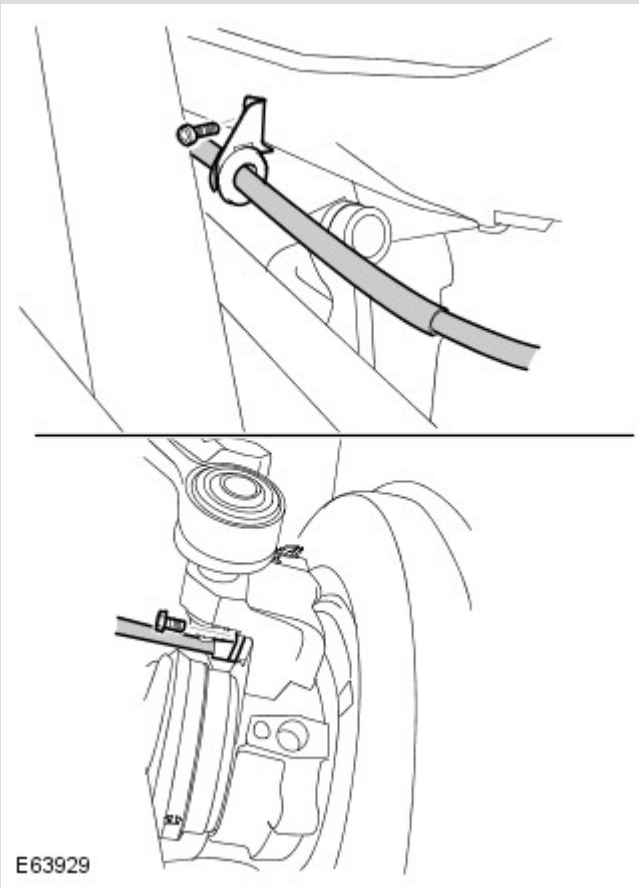

Disconnect the parking brake cable from the wheel knuckle.

Remove the bolt.

10.

NOTE:

Use an additional wrench to prevent the component from rotating.

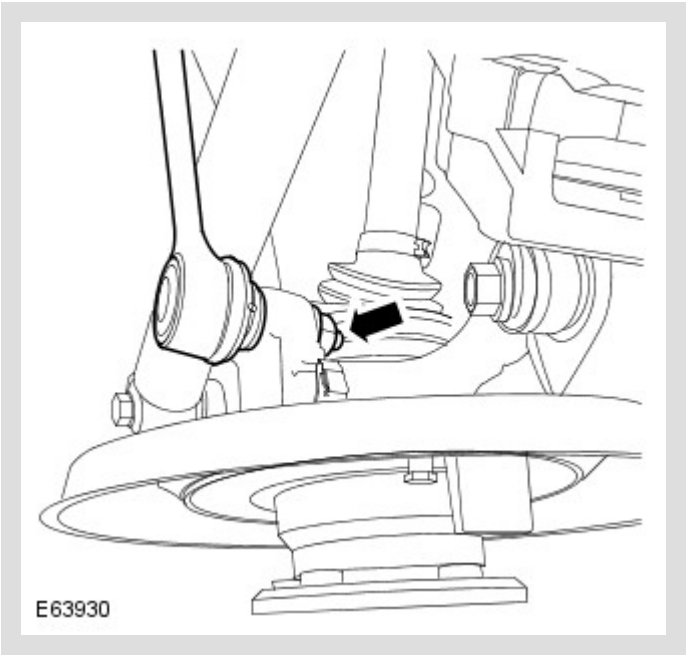

Release the toe link.

Remove the nut.

11.

CAUTION:

Make sure the ball joint seal is not damaged. A damaged seal will lead to the premature failure of the joint.

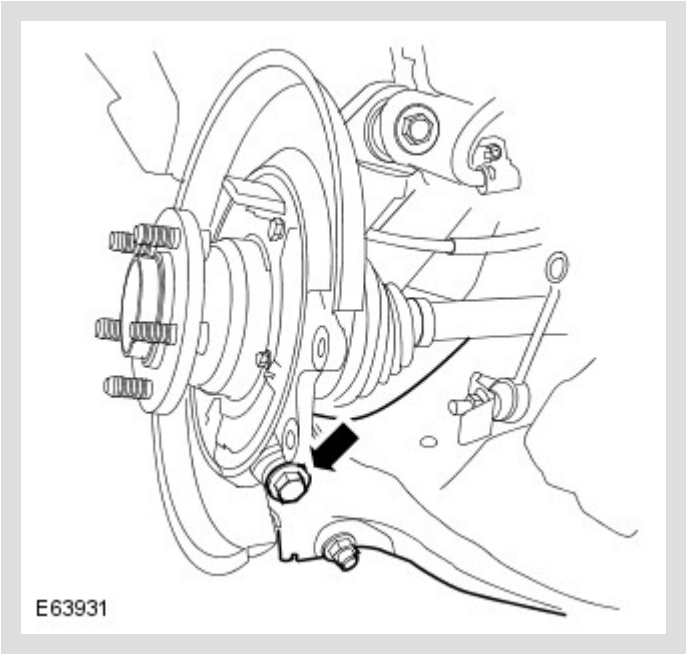

Release the lower arm.

Using a trolley jack, support the lower arm.

Remove and discard the nut and bolt.

12.

CAUTION:

Do not use a hammer to detach the halfshaft from the hub assembly, failure to follow this instruction may result in damage to the halfshaft.

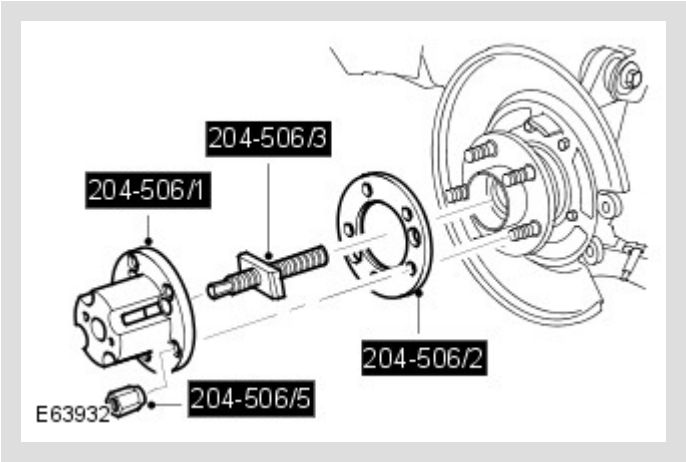

Using the special tools, release the halfshaft from the wheel hub.

13.

CAUTIONS:

- Make sure the ball joint seal is not damaged. A damaged seal will lead to the premature failure of the joint.
- Mark the position of the bolt in relation to the arm.

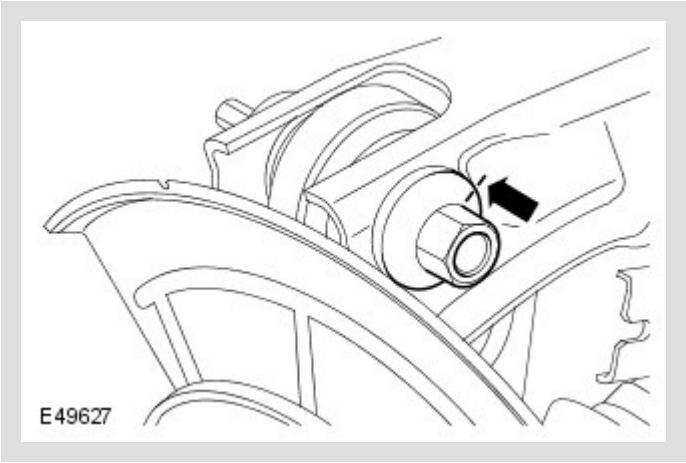

Release the upper arm.

Remove the special bolt and discard the nut.

Remove the special washer.

14.

CAUTION:

Make sure the ball joint seal is not damaged. A damaged seal will lead to the premature failure of the joint.

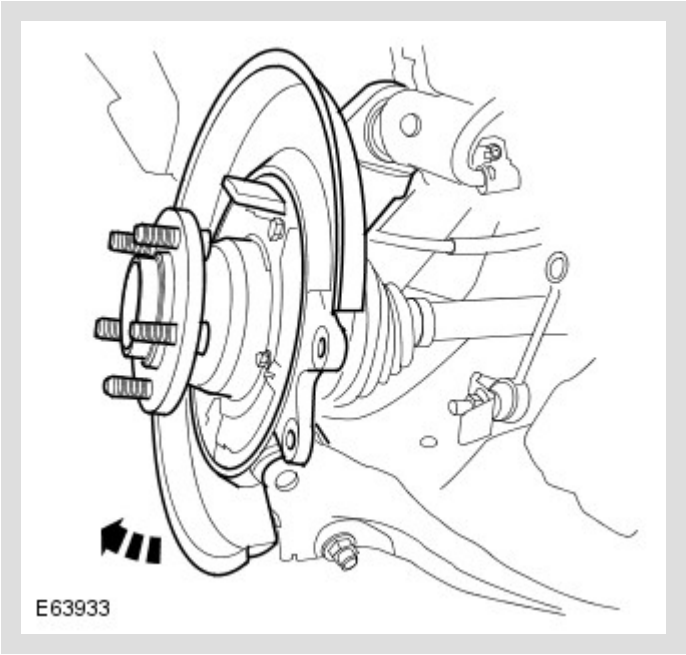

Remove the wheel knuckle.

INSTALLATION

1.

CAUTION:

Make sure the ball joint seal is not damaged. A damaged seal will lead to the premature failure of the joint.

Install the wheel knuckle.

Clean the component mating faces.

Lightly lubricate the halfshaft splines.

Connect to the tie rod.

Install the special bolt to the upper arm.

2. Secure the upper arm and wheel knuckle.

Align the bolt to the marks made previously.

Install the special washer.

Install a new nut and lightly tighten.

3.

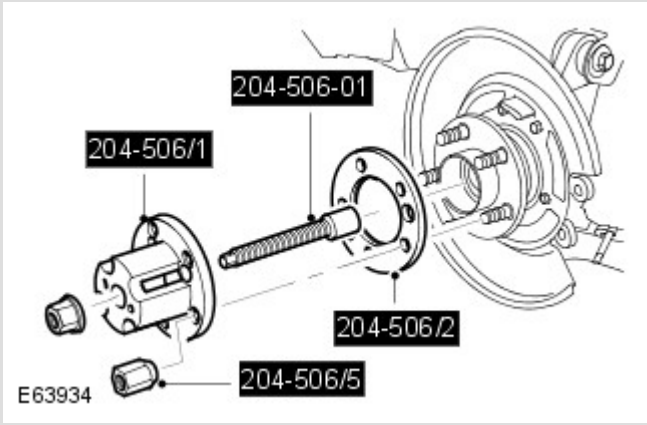

Using the special tools, install the halfshaft in the wheel hub.

4.

CAUTION:

Make sure the ball joint seal is not damaged. A damaged seal will lead to the premature failure of the joint.

Secure the lower arm and wheel knuckle.

Install a new nut and bolt and tighten to 250 Nm (184 lb.ft).

5. **CAUTION:**

Make sure the ball joint seal is not damaged. A damaged seal will lead to the premature failure of the joint.

NOTE:

Use an additional wrench to prevent the component from rotating.

Install the toe link nut and tighten it to 165 Nm (121 lb.ft).

6. **CAUTION:**

Install the nuts finger tight before final tightening.

Install a new halfshaft retaining nut and lightly tighten.

7. Install the parking brake cable.

   Clean the component mating faces.

   Tighten the bolt to 8 Nm (6 lb.ft)

8. Secure the parking brake cable clip.

   Tighten the Allen screw to 5 Nm (4 lb.ft)

9. Install the rear wheel speed sensor.

   Clean the component mating faces.

   Tighten the Allen screw to 8 Nm (6 lb.ft).

   Secure the lead in the clip.

10. Install the parking brake shoe expander.

    Clean the component mating faces.

11. Install the parking brake shoes.

    Clean the component mating faces.

    Install the retainers.

    Install the return spring.

12. Install the brake disc.
For additional information, refer to: Brake Disc (206-04 Rear Disc Brake, Removal and Installation).

13. **CAUTION:**

Do not use air tools to install the nut. Failure to follow this instruction may result in damage to the component.

Tighten the halfshaft retaining nut to 420 Nm (311 lb.ft).

Stake the nut to the halfshaft.

14. Install the wheels and tires.

Tighten the wheel nuts to 140 Nm (103 lb.ft).

15. Tighten the upper arm to wheel knuckle nut and bolt to 165 Nm (121 lb.ft).

16. Check, and if necessary, adjust the wheel alignment.
For additional information, refer to: Four-Wheel Alignment (204-00 Suspension System - General Information, General Procedures).

WHEELS AND TIRES

SPECIFICATIONS

Wheels

NOTE:

Vehicles may be fitted with a Temporary Spare or a Full Sized Spare wheel.

WHEEL TYPE	WHEEL SIZE
Alloy wheel	▪ 8J x19 ▪ 8.5J x20
Steel (temporary spare) wheel	5.5J x19

Tire Size

NOTES:

- The tire size is displayed on the outer wall of each tire.
- All Range Rover tyres are rated as XL (Extra Load) or 'Reinforced'
- Tyre brand fitted can depend upon the Market in which the vehicle is sold and/or the wheel style fitted, and/or the specific derivative.
- Supercharged vehicles must have 20" wheels & tyres and may not be fitted with the 20" Pirelli Tyre.
- The Michelin Tyres may only be fitted in the Single Load Condition markets identified below.

WHEEL SIZE	TIRE SIZE	TIRE LOAD INDEX
19 inch - Alloy	255/55 R19	▪ 111V Pirelli Scorpion Zero ▪ 111V Michelin Latitude Tour HP
20 inch - Alloy	255/50 R20	▪ 109Y Pirelli Scorpion Zero ▪ 109Y Continental CrossContact UHP ▪ 109Y Michelin Latitude Diamaris
19 inch – Steel Spare	175/80 R19	122M Continental CST Space Saver

Tire Pressures - RoW vehicles (Dual Load Conditions)

LOADING CONDITION	BAR	LB/IN²	KPA
Normal operating conditions:**			
Front	2.3	33	230
Rear	2.5	36	250
Vehicle loaded to maximum gross vehicle weight:			

LOADING CONDITION	BAR	LB/IN²	KPA
Front	2.5	36	250
Rear	2.9	42	290

**** Normal operating conditions: Carrying up to 4 passengers and luggage**

Tire Pressures – NAS/Gulf/Brazil vehicles (Single Load Condition)

LOADING CONDITION	BAR	LB/IN²	KPA
All operating conditions:			
Front	2.5	36	250
Rear	2.9	42	290

Tire Pressures – Temporary Spare

LOADING CONDITION	BAR	LB/IN²	KPA
All operating conditions:	4.2	60	420

WHEELS AND TIRES

TIRE LOW PRESSURE SENSOR (G552497)

REMOVAL AND INSTALLATION

74.10.05	SENSOR - TIRE PRESSURE MONITORING SYSTEM (TPMS) - RENEW	ALL DERIVATIVES	0.4	USED WITHINS	+

REMOVAL

NOTE:

It is strongly recommended that the valve seal and steel washer is replaced each time a tire is changed to avoid a seal failure. The seal and washer must be replaced if the sensor is removed. Removal of the sensor retaining nut must be regarded as sensor removal. The valve cap must always be in place except when inflating, releasing pressure or checking pressure.

1.

WARNING:

Do not work on or under a vehicle supported only by a jack. Always support the vehicle on safety stands.

Raise and support the vehicle.

2. Remove the wheel and tire.

3. **CAUTION:**

To avoid damage to the tire low pressure sensor, release the tire bead from the rim, 180 degrees from the valve.

Remove the tire from the wheel.

4. **CAUTIONS:**

- Do not push on the valve.
- If the tire low pressure sensor is to be re-installed, a new washer, seal and nut must be installed.

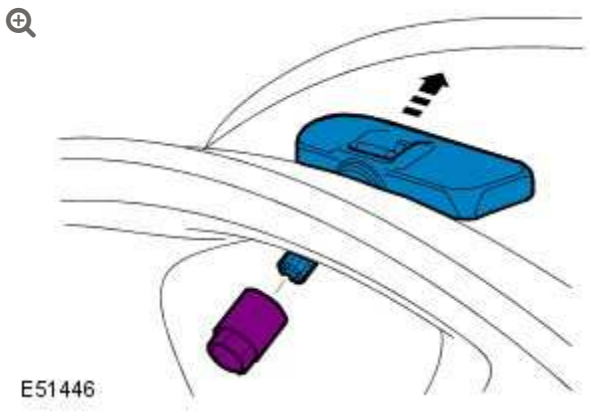

Remove the tire low pressure sensor.

- Remove the nut.
- Release and withdraw the sensor along the valve axis.

5.



If necessary, install a new seal and washer.

- Remove and discard the seal and washer.
- Install a new washer and seal, making sure the valve remains pressed fully onto its seat.

INSTALLATION

1.

CAUTION:

Do not use compressed air to clean the sensor. Do not clean the sensor with solvents or cleaning agents of any type, use a clean dry cloth.

Clean the component mating faces.

2.

CAUTION:

Do not apply any lubricant to the new valve.

NOTE:

If the sensor is replaced on a 'running' wheel, the new sensor identification will be learnt when the vehicle is first driven. If a new sensor is fitted to the spare wheel the identification for that sensor must be programmed into the Tire Pressure Monitoring System (TPMS) module using T4. The identifcation code is provided on a label with the complete assembly and is also printed on the casing of each sensor.

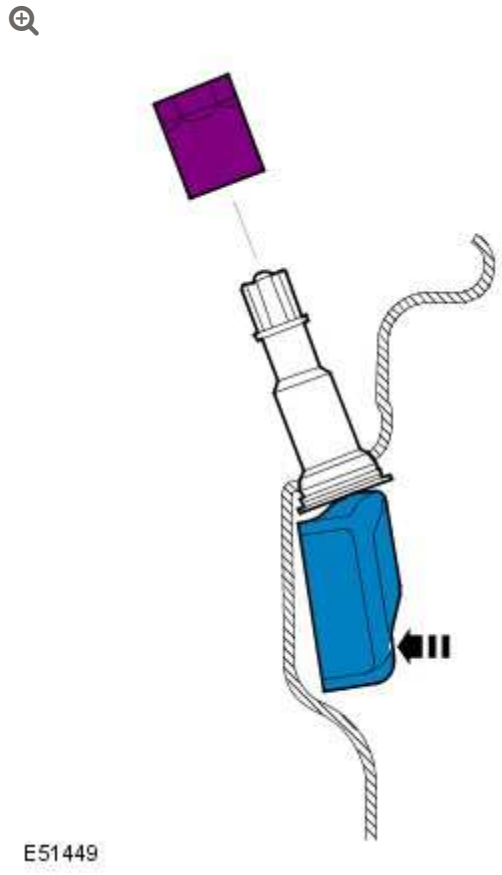

Install the tire low pressure sensor.

- Install and hand tighten the nut whilst keeping the sensor in place.
- Tighten the nut to 8 Nm (6 lb.ft).

3. Install the tire and balance the wheel.

4. Install the wheel and tire.
   - Tighten the wheel nuts to 140 Nm (103 lb.ft).

WHEELS AND TIRES

TIRE PRESSURE MONITORING SYSTEM (TPMS) FRONT ANTENNA

(G552498)

REMOVAL AND INSTALLATION

86.53.16	ANTENNA - FRONT WHEEL - TIRE PRESSURE MONITORING SYSTEM (TPMS) - RENEW	ALL DERIVATIVES	0.4	USED WITHINS	+

REMOVAL

1. **WARNING:**

> Do not work on or under a vehicle supported only by a jack. Always support the vehicle on safety stands.

Raise and support the vehicle.

2. Remove the front wheel.

3. 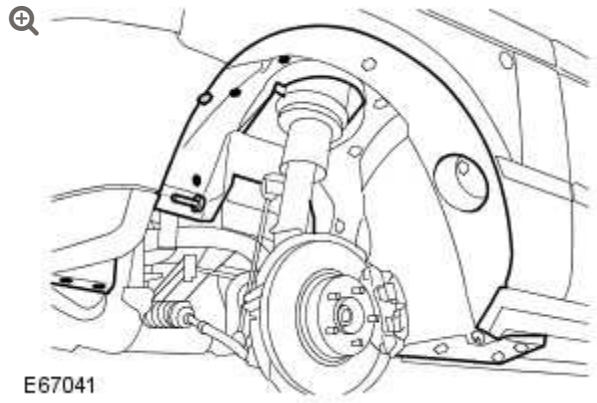

Release the front of the fender splash shield.

- Remove the plastic nut.
- Remove the 6 screws.

4. 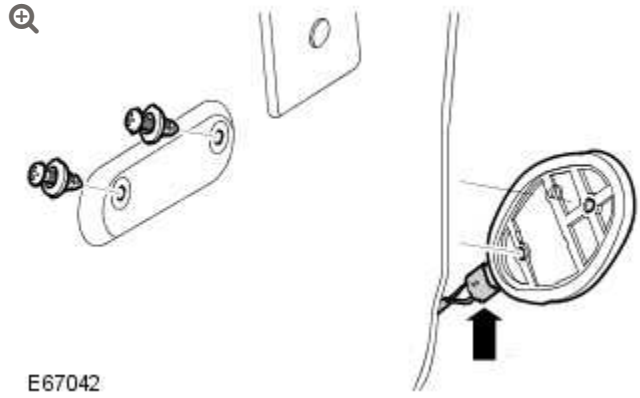

Remove the tire pressure antenna.

- Disconnect the electrical connector.
- Release the 2 clips.

INSTALLATION

1. Install the tire pressure antenna.
   - Install the 2 clips.

- Connect the electrical connector.

2. Secure the fender splash shield.
   - Tighten the screws.
   - Tighten the nut.

3. Install the front wheel.
   - Tighten the wheel nuts to 140 Nm (103 lb.ft).

WHEELS AND TIRES

DESCRIPTION AND OPERATION

TIRES

NOTE:

The TPMS valve should be serviced using the suitable service kit, each time the tyre is dismounted, to ensure an air tight seal. Attention should be made to the detail of fitting this kit.

Care must be taken when removing and refitting tires to ensure that the tire pressure sensor is not damaged.

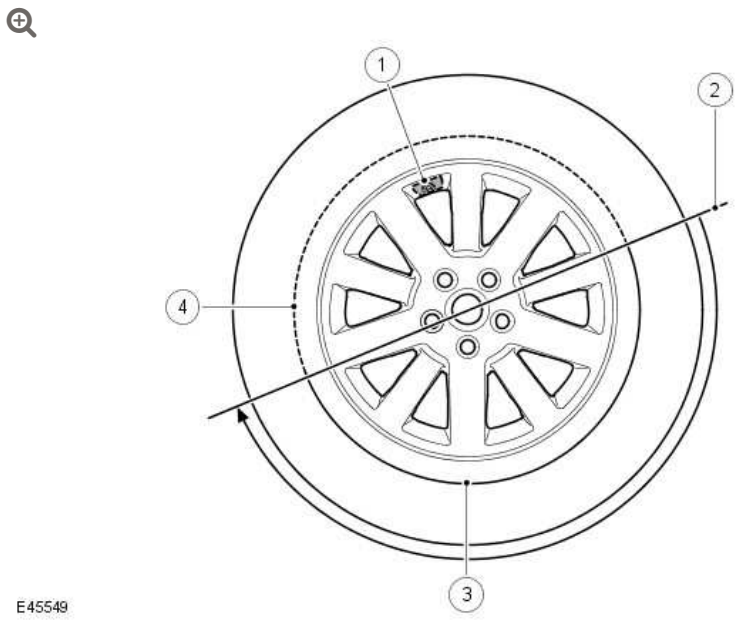

ITEM	DESCRIPTION
1	Tire valve and pressure sensor
2	Tire fitting/removal tool initial start position
3	High tire and bead tension area
4	Low tire and bead tension area

When removing the tire, the bead breaker must not be used within 90 degrees of the tire valve in each direction.

When using the tire removal machine, the fitting arm start position must be positioned as shown in the tire changing illustration. The wheel can then be rotated through 180 degrees in a counterclockwise direction. This will relieve the high tension from the tire bead allowing the remaining 180 degrees of the tire to be manually pulled from the rim.

When refitting the tire, position the fitting arm as shown. Rotate the tire and take care that the bead on the low tension side of the tire does not damage the sensor.

TREAD ACT – NAS ONLY

Vehicles supplied to the North American markets must comply with the legislation of the Transport Recall Enhancement, Accountability and Documentation (TREAD) act. Part of the requirement of the TREAD act is for the vehicle to display a label, positioned on the driver's side B-pillar, which defines the recommended tire inflation pressure, load limits and maximum load of passengers and luggage weight the vehicle can safely carry. This label will be specific to each individual vehicle and will be installed on the production line.

This label must not be removed from the vehicle. The label information will only define the specification of the vehicle as it came off the production line. It will not include dealer or owner fitted accessory wheels and tires of differing size from the original fitment.

NOTE:

If tires and wheels of a non-standard size are fitted to the vehicle, the car configuration file must be updated using a Land Rover approved diagnostic system.

If the label is damaged or removed for body repair, it must be replaced with a new label specific to that vehicle. A new label is requested from Land Rover parts and will be printed specifically for the supplied VIN of the vehicle.

TIRE PRESSURE MONITORING SYSTEM (TPMS)

Tire Pressure Monitoring System - Component Location

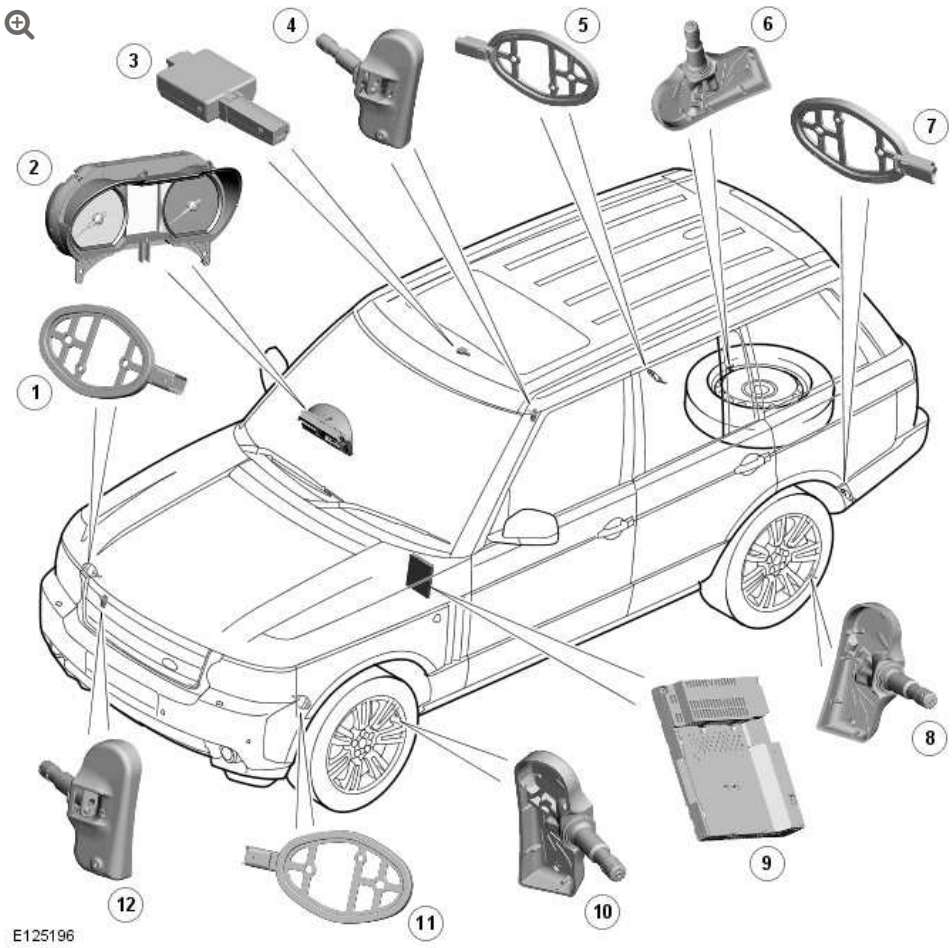

ITEM	DESCRIPTION
1	RH (right-hand) front initiator
2	Instrument cluster
3	TPMS RF receiver
4	RH rear tire pressure sensor
5	RH rear initiator
6	Spare tire pressure sensor
7	LH (left-hand) rear initiator
8	LH rear tire pressure sensor
9	Integrated Head Unit (IHU)
10	LH front tire pressure sensor
11	LH front initiator
12	RH front tire pressure sensor

The purpose of the Tire Pressure Monitoring System (TPMS) is to assist the driver in maintaining the vehicle's tire pressures at the optimum level in order to:

- improve fuel consumption
- maintain ride and handling characteristics
- reduce the risk of rapid tire deflation – which may be caused by under inflated tires
- comply with legislation in relevant markets.

The TPMS measures the pressure in each of the tires on the vehicle (including the spare, if required) and issues warnings to the driver if any of the pressures deviate from defined tolerances.

NOTES:

- During a ‘blow out’ a very rapid reduction in pressure is experienced. The system is not intended to warn the driver of a ‘blow out’, since it is not possible to give the driver sufficient warning that such an event is occurring, due to its short duration. The design of the TPMS is to assist the driver in keeping the tires at the correct pressure, which will tend to reduce the likelihood of a tire ‘blow out’ occurring.
- TPMS is inhibited when the vehicle is in Delivery mode. For more details on Delivery mode refer to the PDI manual.

A single TPMS hardware configuration is used. TPMS status information is relayed to the driver with a message displayed in the instrument cluster message center and a amber warning indicator.

TIRE LOCATION

Because of the requirement for different pressure targets and thresholds for the front and rear tires, the CJB (central junction box) can identify the location of the tires on the vehicle, and assign a received tire pressure sensor identification to a specific position on the vehicle (i.e. FL (front left), FR (front right), RL (rear left) or RR (rear right)).

Tire location is performed automatically by the CJB using an auto-location function. This function requires no manual intervention by the driver. The CJB can automatically learn the position of tires on the vehicle if the tire pressure sensors or their positions are changed on the vehicle.

The tire learn and location process is ready to commence when the vehicle has been stationary or is traveling at less than 12.5 mph (20 km/h) for 15 minutes. This is known as 'parking mode'. The learn/locate process requires the vehicle to be driven at speeds of

more than 12 mph (20 km/h) for 15 minutes. If the vehicle speed reduces to below 12 mph (20 km/h), the learn process timer is suspended until the vehicle speed increases to more than 12 mph (20 km/h), after which time the timer is resumed. If the vehicle speed remains below 12.5 mph (20 km/h) for more than 15 minutes, the timer is set to zero and process starts again.

The CJB can automatically detect, under all operating conditions, the following:

- one or more tire pressure sensors have been replaced
- one or more tire pressure sensor identifications are missing
- one or more ‘alien’ identifications are being received, i.e. the CJB can reject identifications from tire pressure sensors that do not belong to the vehicle
- the spare tire and one of the tires in use on the vehicle have exchanged position on the vehicle.

If the tire pressure sensors fitted to the running wheels (not the spare) are changed, the CJB can learn the new sensor identifications automatically. The learn function requires no manual intervention by the driver.

If a new sensor is fitted to the spare tire it must have its identification code programmed into the CJB using a Land Rover approved diagnostic system, or used on the vehicle as a 'running' wheel and the vehicle driven for 15 minutes at more than 12.5 mph (20 km/h).

SPARE TIRE IDENTIFICATION

Depending on the vehicle specification, the spare tire may or may not be fitted with a tire pressure sensor.

NOTE:

> Tire pressure sensors cannot be fitted to steel space saver spare wheels.

If the spare tire is fitted with a tire pressure sensor, the CJB can detect it, determine that it is the spare tire and monitor its pressure and issue warnings to the driver accordingly. If the CJB expects the spare tire to be fitted with a tire pressure sensor and it does not, the CJB will not show a fault to the driver, however a fault code will be stored in the CJB.

If the spare tire is being monitored and the driver replaces a flat 'running' tire with the spare tire, the CJB will not continually warn the driver that the original flat tire (now in the spare position) is flat. This prevents distraction of the driver by constant pressure warnings being issued. The driver is reminded by a message displayed for 20 seconds at each ignition on cycle that the spare tire is flat.

SYSTEM OPERATION

Each time the vehicle is driven, the CJB transmits a Low Frequency (LF) (125 KHz) signal to each initiator in turn. This is received by the tire pressure sensor which transmits a Radio Frequency (RF) (315 or 433 MHz depending on market) signal to the RF receiver. This signal contains coded data which corresponds to sensor identification, air pressure, air temperature and acceleration data. This signal is communicated to the CJB via a K-bus line.

The system enters 'parking mode' after the vehicle speed has been less than 12.5 mph (20 km/h) for 12 minutes. In parking mode the tire pressure sensors transmit a coded signal to the CJB once every 13 hours. If the tire pressure decreases by more than 1 lbf/in^2 (0.6 bar) the sensor will transmit more often if pressure is being lost.

The spare tire sensor transmits a signal every 13 hours in the same manner as the road wheels when in parking mode. If the tire pressure decreases by more than 1 lbf/in^2 (0.6 bar) the sensor will transmit more often if pressure is being lost.

As each wheel responds to the LF signal from the CJB, it is assigned a position on the vehicle and is monitored for the remainder of that drive cycle in that position.

When the vehicle has been parked for more than 15 minutes and then driven at a speed of more than 12.5 mph (20 km/h), the initiators fire in turn for 18 seconds in the following order:

- Front left
- 6 second pause (for the to detect a response from the tire pressure sensor)
- Front right
- 6 second pause
- Rear right
- 6 second pause
- Rear left
- 6 second pause.

Each tire pressure sensor responds in turn so the CJB can establish the sensor positions at the start of the drive cycle. This process is repeated up to three times but less if the sensor positions are already known in the CJB. The process is known as 'Auto Location' and takes 7 to 8 minutes to complete. During this period the tire sensors transmit at regular intervals, once every 15 seconds. For the remainder of the drive cycle the tire sensors transmit once every 60 seconds or if a change in tire pressure is sensed until the vehicle stops and the system returns to parking mode.

Once the wheel position is established, the initiators stop firing a signal and do not fire again until the vehicle has been parked for more than 15 minutes. The signal transmissions from each wheel sensor continue at 1 minute intervals whilst the vehicle is being driven. This transmission is to monitor the tire pressure.

At 25% deflation the amber warning indicator in the instrument cluster is illuminated and an appropriate message displayed in the message center.

RF RECEIVER

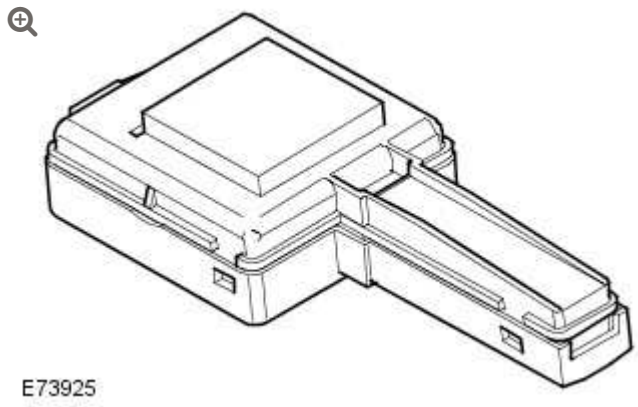

The RF receiver is mounted behind the overhead console and connects to the vehicle harness via a fly lead.

The RF receiver receives transmissions from each of the tire pressure sensors via an internal antenna. This information is then communicated to the CJB via a dedicated Local Interconnect Network (K-bus).

INITIATOR

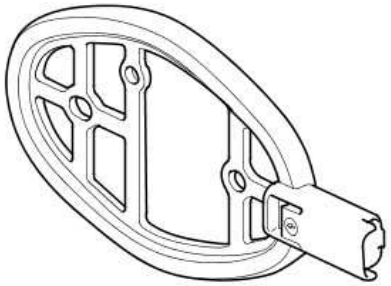

E45552

The initiators are located at the front of the front wheel arches and at the rear of the rear wheel arches and are secured with two scrivets. The TPMS has four initiators and each has a connector which connects with the body harness.

The initiator is a passive, Low Frequency (LF) transmitter. Each initiator provides an auto-location feature to identify tire positions on the vehicle and transmit that data to the CJB.

The CJB energizes each initiator in turn using LF drivers. The corresponding tire pressure sensor detects the resulting LF transmission and responds by initiating an RF transmission of its data. This data is received by the RF receiver and communicated to the CJB via a K-bus. The CJB can then determine which sensor is transmitting and its location on the vehicle.

TIRE PRESSURE SENSOR

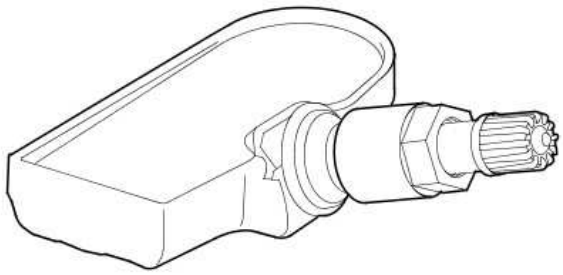

E45553

The TPMS system uses ‘active’ tire pressure sensors which are mounted on each wheel, inside the tire cavity. The sensor is retained in position by the valve attachment to the wheel structure. The sensors transmit their RF signals at either 315 MHz or 433 MHz dependent on market requirements.

The sensors periodically measure the pressure and temperature of the air inside the tire plus the centripetal acceleration acting on the sensor. These measurements are transmitted periodically to the RF receiver located behind the overhead console.

The tire pressure sensors are self-contained units which have no electrical connections into or out of the sensor.

The care points detailed in the 'Tires' section of this chapter must be followed to avoid damage to the sensor. If the sensor is replaced, the nut, seal and washer must also be replaced and the sensor tightened to the correct torque value as given in the Service Repair manual.

The RF transmission from the sensor contains a unique identification code in its transmission data, so that the CJB can identify the tire on the vehicle. If the sensor is replaced on a 'running' wheel, the new sensor identification will be learnt when the vehicle is first driven at a speed of more than 12.5 mph (20 km/h) for 15 minutes. If a new sensor is fitted to the spare wheel, the identification for that sensor

must be programmed into the CJB using a Land Rover approved diagnostic system or that wheel will not be monitored. The code is provided on a label with the complete wheel and tire assembly when new and is also printed on the casing of each sensor.

The replacement spare wheel may also be programmed to the vehicle by using it as a 'running' wheel for 15 minutes at more than 12.5 mph (20 km/h), then replacing it to the spare wheel position.

In order to conserve battery power, the tire sensor module uses different transmission rates when the wheel is stationary or moving. The wheel speed required to change between the stationary and moving transmission rates is very low to allow for the requirement for slow off-road driving.

INSTRUMENT CLUSTER INDICATIONS

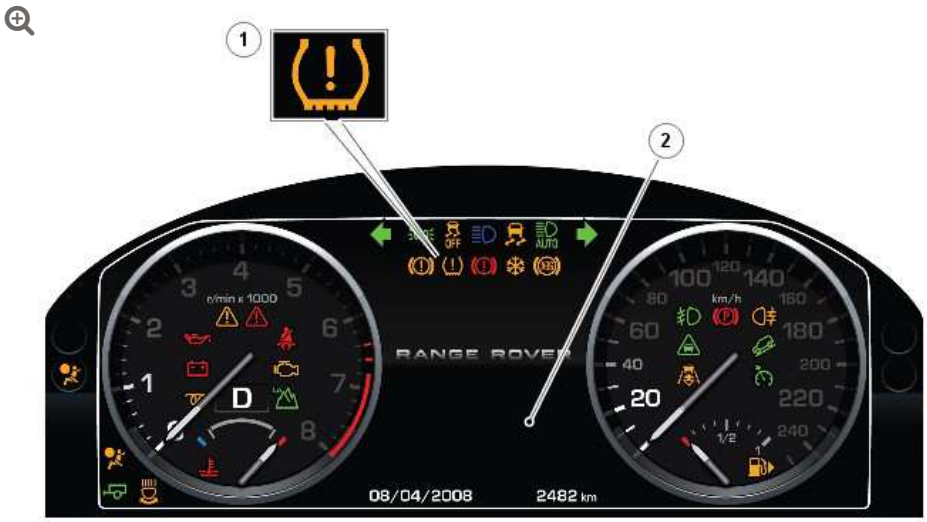

E125427

ITEM	DESCRIPTION
1	Amber warning indicator
2	Message center

The warning indications to the driver are common on all vehicles fitted with TPMS. Warnings are conveyed by an amber light emitting

diode (LED) warning indicator and a text message displayed in the message center.

The warning indicator and message center are driven by CAN messages from the CJB. The warning indicator is illuminated by the cluster software for 3 seconds when the vehicle is in power mode 6 for a bulb check.

For additional information, refer to: Information and Message Center (413-08 Information and Message Center, Description and Operation).

CONTROLLER AREA NETWORK (CAN)

The CJB sends and receives a number of digital messages via the medium speed controller area network (CAN). The received messages are used for the operation of the TPMS. The transmitted messages comprise of TPMS status and requests to the instrument cluster to illuminate warnings indicators and/or display messages in the message center.

TRANSMITTED MESSAGES

The CJB transmits the messages shown in the following table.

MESSAGE	RECEIVED BY
TPMS diagnostic response	A Land Rover approved diagnostic system.
TPMS amber warning indicator request at 25% tire deflation	Instrument cluster
TPMS message display request	Instrument cluster

DIAGNOSTICS

The CJB has a diagnostic connection via the medium speed CAN to enable system status and faults to be retrieved using a Land Rover approved diagnostic system.

Additionally, an on-board diagnostic routine within the CJB constantly monitors the system and alerts the driver to system faults by illuminating the amber warning indicator and/or displaying a message in the instrument cluster message center.

FAULT DETECTION

If a sensor fails, the amber warning indicator in the instrument cluster will be illuminated. A message 'XX Tyre Not Monitored' will be displayed in the message center in addition to the amber warning indicator.

NOTE:

'XX' is the tire position on the vehicle, e.g. FL (front left), FR (front right), RL (rear left) or RR (rear right).

If more than one sensor fails or the CJB develops a fault, the amber warning indicator will be illuminated. A message 'Tyre Monitoring System Fault' will be displayed in the message center in addition to the amber warning indicator. This fault could also be caused if RF interference near the vehicle affects the system signal reception. When the interference has ceased, the fault will be automatically cancelled and the TPMS will operate normally.

If a tire pressure sensor battery voltage becomes low, the sensor transmits a message to the CJB. The CJB stores the low battery condition as a fault flag in its memory with no other visual warnings displayed. If the battery fails, the sensor will stop transmitting and the CJB will transmit a message to display 'FL Tyre Not Monitored' for example in the message center. The dealer should interrogate the CJB for the fault flag using a Land Rover approved diagnostic system to determine the cause of the message. If the battery has failed, the sensor must be replaced and the stored fault flags removed using a Land Rover approved diagnostic system. The CJB

will learn the identification of the new sensor when the vehicle is driven. If the replaced sensor is fitted to the spare wheel (if fitted), its identification must be manually programmed into the CJB using a Land Rover approved diagnostic system or by using it as a 'running' wheel for 15 minutes at more than 12.5 mph (20 km/h), then replacing it to the spare wheel position.

CONTROL DIAGRAM

NOTE:

A = Hardwired; **B** = K-Bus; **F** = RF Transmission; **N** = Medium Speed CAN Bus; **W** = LF Transmission

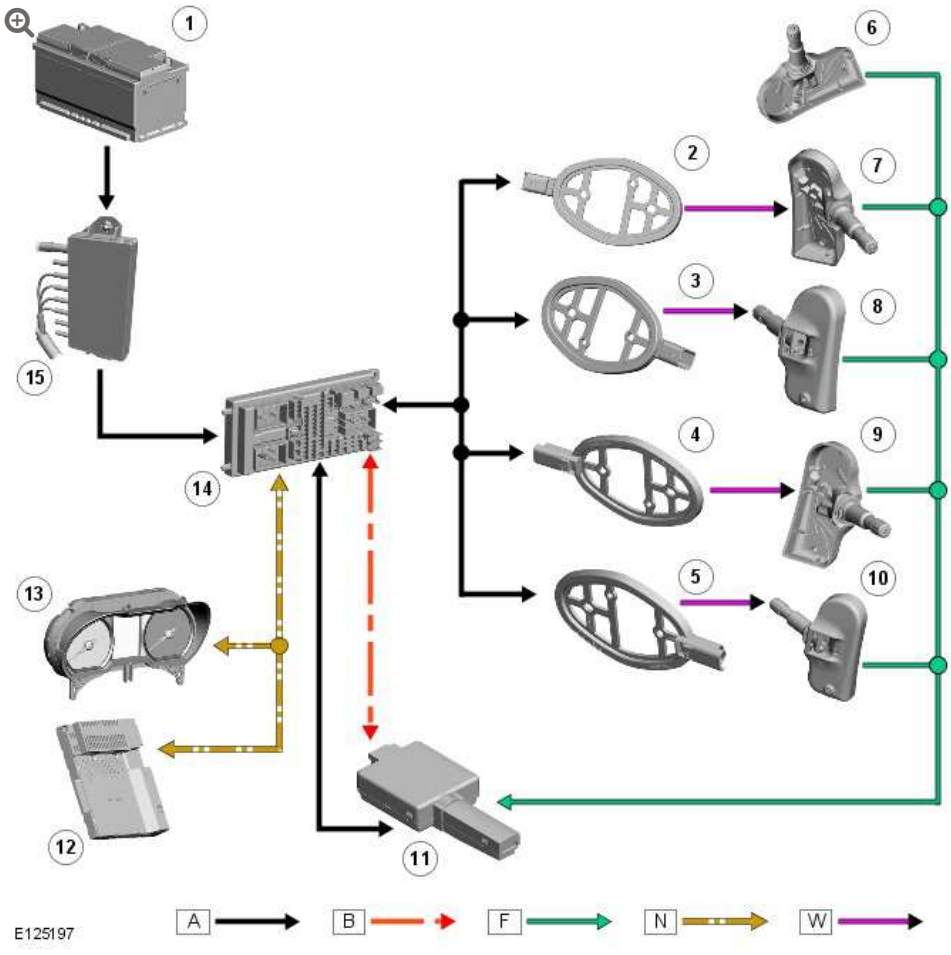

ITEM	DESCRIPTION

ITEM	DESCRIPTION
1	Battery
2	RH rear initiator
3	LH rear initiator
4	RH front initiator
5	LH front initiator
6	Spare tire pressure sensor
7	RH rear tire pressure sensor
8	LH rear tire pressure sensor
9	RH front tire pressure sensor
10	LH front tire pressure sensor
11	TPMS RF receiver
12	Integrated Head Unit (IHU)
13	Instrument cluster
14	CJB
15	BJB (battery junction box)

WHEELS AND TIRES

TIRE PRESSURE MONITORING SYSTEM (TPMS) MODULE (G552432)

REMOVAL AND INSTALLATION

86.54.05	MODULE - TIRE PRESSURE MONITORING - RENEW	ALL DERIVATIVES	0.1	USED WITHINS	+

REMOVAL

1.

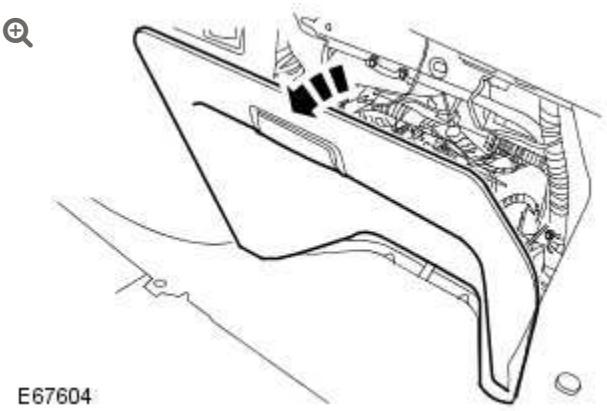

Remove the access panel from the loadspace RH trim panel.

2.

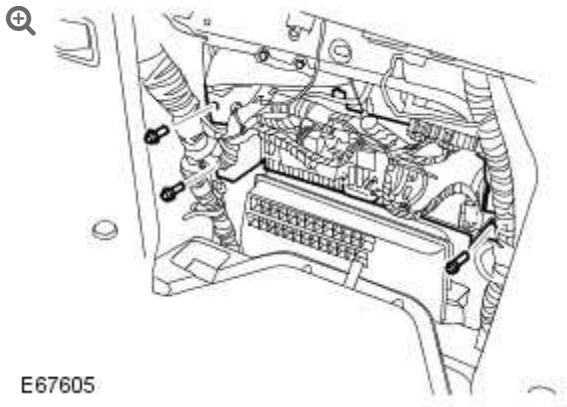

Release the auxiliary junction box mounting bracket.

- Remove the 3 bolts.

3.

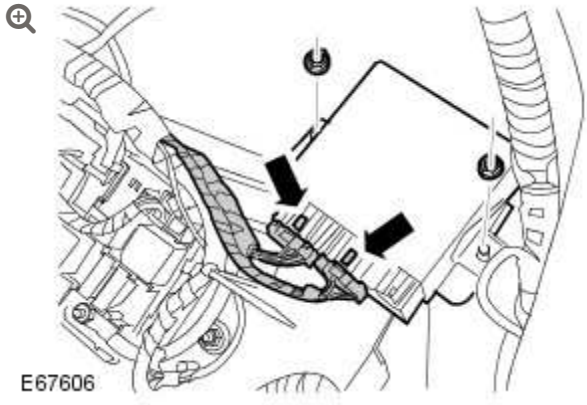

Remove the tire pressure monitoring module.

- Disconnect the 2 electrical connectors.
- Remove the 2 nuts.

INSTALLATION

1. Install the tire pressure monitoring module.
   - Tighten the nuts.
   - Connect the electrical connectors.
2. Secure the auxiliary junction box mounting bracket.

- Tighten the bolts to 6 Nm (4 lb.ft).

3. Install the access panel.

4. Using WDS, initiate a new control module.

WHEELS AND TIRES

TIRE PRESSURE MONITORING SYSTEM (TPMS) REAR ANTENNA (G552499)

REMOVAL AND INSTALLATION

86.53.17	ANTENNA - REAR WHEEL - TIRE PRESSURE MONITORING SYSTEM - (TPMS) - RENEW	ALL DERIVATIVES	0.2	USED WITHINS	

REMOVAL

1.

WARNING:

Do not work on or under a vehicle supported only by a jack. Always support the vehicle on safety stands.

Raise and support the vehicle.

2. Remove the rear wheel and tire.

3.

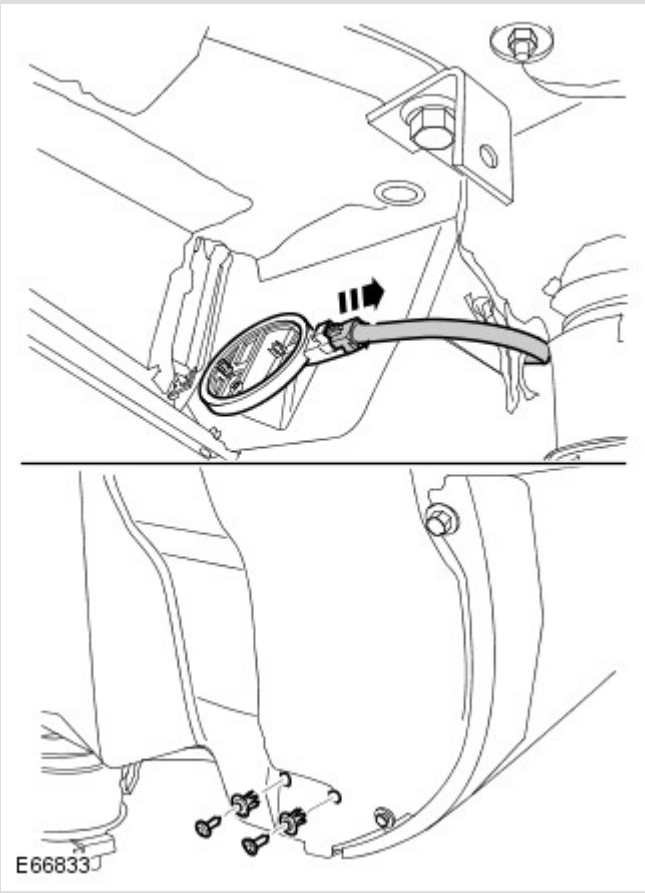

Remove the tire pressure antenna.

Disconnect the electrical connector.

Remove the 2 retainers.

INSTALLATION

1. To install, reverse the removal procedure.

2. Install the wheel and tire.

   Tighten the wheel nuts to 140 Nm (103 lb.ft).

3. Initiate a new tire pressure antenna using T4.

2012.0 RANGE ROVER (LM), 204-04

WHEELS AND TIRES

DIAGNOSIS AND TESTING

PRINCIPLES OF OPERATION

For a detailed description of the Tire Pressure Monitoring System, refer to the relevant Description and Operation section in the workshop manual.REFER to: Wheels and Tires (204-04 Wheels and Tires, Description and Operation).

INSPECTION AND VERIFICATION

CAUTION:

Diagnosis by substitution from a donor vehicle is **NOT** acceptable. Substitution of control modules does not guarantee confirmation of a fault, and may also cause additional faults in the vehicle being tested and/or the donor vehicle.

NOTES:

- If a control module or a component is suspect and the vehicle remains under manufacturer warranty, refer to the Warranty Policy and Procedures manual, or determine if any prior approval programme is in operation, prior to the installation of a new module/component.
- When performing voltage or resistance tests, always use a digital multimeter accurate to three decimal places, and with an up-to-date calibration certificate. When testing resistance always take the resistance of the digital multimeter leads into account.
- Check and rectify basic faults before beginning diagnostic routines involving pinpoint tests.

1. Verify the customer concern

1. Visually inspect for obvious signs of damage and system integrity

Visual Inspection

MECHANICAL	ELECTRICAL
■ Wheels/tires ■ Tire pressure sensors	■ Fuses ■ Wiring harnesses and connectors ■ Central junction box ■ Tire pressure sensors

1. If an obvious cause for an observed or reported concern is found, correct the cause (if possible) before proceeding to the next step

1. If the cause is not visually evident, verify the symptom and refer to the Symptom Chart, alternatively check for Diagnostic Trouble Codes (DTCs) and refer to the DTC Index

1. Check DDW for open campaigns. Refer to the corresponding bulletins and SSMs which may be valid for the specific customer complaint and carry out the recommendations as required

SYMPTOM CHART

SYMPTOM	POSSIBLE CAUSES	ACTION
Tire pressure monitoring system warning indicator illuminated continuously	■ One or more tires punctured / incorrectly inflated	**NOTE:** To extinguish the warning indicator/message, it is essential that the tire pressures are adjusted to the correct pressure with the ignition set to on. It is not necessary to drive the vehicle to extinguish the warning indicator /message; changing the tire pressure causes the tire pressure sensor to transmit new data. ■ Check the tires for punctures. Check the tire pressures and correct as necessary
Tire pressure monitoring system warning indicator flashing for 75 seconds	■ Tire pressure monitoring	■ Using the manufacturer approved diagnostic system, check the central junction box for related DTCs and refer to the relevant DTC index

and then illuminated continuously	system fault	

TIRE PRESSURE CHECK AND ADJUSTMENT

NOTE:

Tire pressure adjustments are part of routine owner maintenance. Tire pressure adjustments that are required due to a lack of owner maintenance are not to be claimed under vehicle warranty.

The tire pressures should be checked using a calibrated tire pressure gauge and when the tires are cold (vehicle parked in the ambient temperature for at least one hour, not in a garage with an artificial ambient temperature).

If the tire pressure warning indicator/message does not clear within two minutes of adjusting the tire pressures, it is likely that the gauge is not correctly calibrated or the tires are warm. Perform the following steps until the warning has cleared:

1. Rotate the wheels by 180°

1. Increase the tire pressures by 3psi

1. Wait a further two minutes

1. Reset the tire pressures to the correct pressure

DTC INDEX

For a list of Diagnostic Trouble Codes (DTCs) that could be logged on this vehicle, please refer to Section 100-00.REFER to: Diagnostic Trouble Code (DTC) Index - DTC: Module Name: Central Junction Box (100-00 General Information, Description and Operation).

PINPOINT TESTS

<table>
<tr><th colspan="2">PINPOINT TEST A : U201F-11 TESTS</th></tr>
<tr><th>TEST CONDITIONS</th><th>DETAILS/RESULTS/ACTIONS</th></tr>
<tr><th colspan="2">A1: U201F-11 TEST 1</th></tr>
<tr><td></td><td>1 Set the ignition to off</td></tr>
<tr><td></td><td>2 Disconnect tire pressure monitoring system RF receiver connector C2875</td></tr>
<tr><td></td><td>3 Measure the resistance between:
<table><tr><th>C2875, HARNESS SIDE</th><th>BATTERY</th></tr><tr><td>Terminal 1</td><td>Negative terminal</td></tr></table></td></tr>
<tr><td></td><td>Is the resistance less than 5 ohms?
Yes
GO to A2 .</td></tr>
</table>

No
GO to A3 .

A2: U201F-11 TEST 2

1 Disconnect central junction box connector C0580

2 Measure the resistance between:

C2875, HARNESS SIDE	BATTERY
Terminal 1	Negative terminal

Is the resistance less than 5 ohms?
Yes
Refer to the electrical circuit diagrams and check the tire pressure monitoring system RF receiver LIN circuit for short circuit to ground. Repair the LIN circuit as necessary
No
GO to A4 .

A3: U201F-11 TEST 3

1 Reconnect tire pressure monitoring system RF receiver connector C2875

2 Using the manufacturer approved diagnostic system, clear the DTCs

3 Set the ignition to off

4 Set the ignition to on

5 Read DTCs

Is DTC U201F-11 set?
Yes
Install a new tire pressure monitoring system RF receiver
No

	Investigate possible cause of intermittent failure

A4: U201F-11 TEST 4	
	1 Reconnect central junction box connector C0580
	2 Reconnect tire pressure monitoring system RF receiver connector C2875
	3 Using the manufacturer approved diagnostic system, clear the DTCs
	4 Set the ignition to off
	5 Set the ignition to on
	6 Read DTCs
	Is DTC U201F-11 set? **Yes** Install a new central junction box **No** Investigate possible cause of intermittent failure

PINPOINT TEST B : U201F-12 TESTS	
TEST CONDITIONS	**DETAILS/RESULTS/ACTIONS**
B1: U201F-12 TEST 1	
	1 Set the ignition to off
	2 Disconnect tire pressure monitoring system RF receiver connector C2875
	3 Measure the resistance between:

C2875, HARNESS SIDE	BATTERY

Terminal 1	Positive terminal

Is the resistance less than 5 ohms?

Yes

GO to B2 .

No

GO to B3 .

B2: U201F-12 TEST 2

1 Disconnect central junction box connector C0580

2 Measure the resistance between:

C2875, HARNESS SIDE	BATTERY
Terminal 1	Positive terminal

Is the resistance less than 5 ohms?

Yes

Refer to the electrical circuit diagrams and check the tire pressure monitoring system RF receiver LIN circuit for short circuit to power. Repair the LIN circuit as necessary

No

GO to B4 .

B3: U201F-12 TEST 3

1 Reconnect tire pressure monitoring system RF receiver connector C2875

2 Using the manufacturer approved diagnostic system, clear the DTCs

3 Set the ignition to off

4 Set the ignition to on

	5 Read DTCs
	Is DTC U201F-12 set? **Yes** Install a new tire pressure monitoring system RF receiver **No** Investigate possible cause of intermittent failure
B4: U201F-12 TEST 4	
	1 Reconnect central junction box connector C0580
	2 Reconnect tire pressure monitoring system RF receiver connector C2875
	3 Using the manufacturer approved diagnostic system, clear the DTCs
	4 Set the ignition to off
	5 Set the ignition to on
	6 Read DTCs
	Is DTC U201F-12 set? **Yes** Install a new central junction box **No** Investigate possible cause of intermittent failure

PINPOINT TEST C : U201F-87 TESTS	
TEST CONDITIONS	**DETAILS/RESULTS/ACTIONS**
C1: U201F-87 TEST 1	
	1 Using a multimeter, measure and record the battery voltage (reference voltage)

	2 Connect the multimeter to tire pressure monitoring system RF receiver connector C2875 terminals 3 and 2
	Is the measured voltage less than battery voltage? **Yes** Repair the tire pressure monitoring system RF receiver power/ground circuit as necessary **No** GO to C2 .

C2: U201F-87 TEST 2

	1 Disconnect tire pressure monitoring system RF receiver connector C2875
	2 Disconnect central junction box connector C0580
	3 Measure the resistance between: C2875, HARNESS SIDE: Terminal 1 C0580, HARNESS SIDE: Terminal 25
	Is the resistance less than 5 ohms? **Yes** GO to C3 . **No** Refer to the electrical circuit diagrams and check the tire pressure monitoring system RF receiver LIN circuit for open circuit, high resistance. Repair the LIN circuit as necessary

C3: U201F-87 TEST 3

	1 Reconnect central junction box connector C0580
	2 Reconnect tire pressure monitoring system RF receiver connector C2875
	3 Using the manufacturer approved diagnostic system, clear the DTCs
	4 Set the ignition to off

	5 Set the ignition to on
	6 Read DTCs
	Is DTC U201F-87 set? **Yes** Install a new tire pressure monitoring system RF receiver. GO to C4 . **No** Investigate possible cause of intermittent failure
C4: U201F-87 TEST 4	
	1 Using the manufacturer approved diagnostic system, clear the DTCs
	2 Set the ignition to off
	3 Set the ignition to on
	4 Read DTCs
	Is DTC U201F-87 set? **Yes** Install a new central junction box **No** Test is complete. No further action is required

PINPOINT TEST D : C1D18-00 TESTS	
TEST CONDITIONS	**DETAILS/RESULTS/ACTIONS**
D1: C1D18-00 TEST 1	
	1 Establish the locations of the tire pressure sensor localization failures: Using the manufacturer approved diagnostic system, check datalogger signals: ■ Wheel Position Triggering Statistic, Identifier 1, Unsuccessful triggering (0x4149)

	■ Wheel Position Triggering Statistic, Identifier 2, Unsuccessful triggering (0x4149) ■ Wheel Position Triggering Statistic, Identifier 3, Unsuccessful triggering (0x4149) ■ Wheel Position Triggering Statistic, Identifier 4, Unsuccessful triggering (0x4149)
	Have the locations of the tire pressure sensor localization failures been identified? **Yes** GO to D2 . **No** Investigate possible cause of intermittent failure
D2: C1D18-00 TEST 2	
	1 Using the manufacturer approved diagnostic system, check the central junction box for tire pressure sensor related DTCs
	Are any tire pressure sensor related DTCs set? **Yes** Refer to the relevant DTC index and perform the relevant corrective actions **No** GO to D3 .
D3: C1D18-00 TEST 3	
	1 Using the manufacturer approved diagnostic system, check the central junction box for initiator related DTCs
	Are any initiator related DTCs set? **Yes** Refer to the relevant DTC index and perform the relevant corrective actions **No** GO to D4 .
D4: C1D18-00 TEST 4	
	1 Check for correct installation of the initiator(s) in the location(s) identified
	Are the initiator(s) correctly installed?

Yes
GO to D5 .
No
Install the initiators correctly

D5: C1D18-00 TEST 5
1 Set the ignition to off
2 Disconnect central junction box connector C0584 (front initiators)
3 Disconnect central junction box connector C0586 (rear initiators)
4 Measure the resistance of the front right initiator circuit

C0584, HARNESS SIDE	C0584, HARNESS SIDE
Terminal 1	Terminal 2

5 Measure the resistance of the front left initiator circuit

C0584, HARNESS SIDE	C0584, HARNESS SIDE
Terminal 14	Terminal 15

6 Measure the resistance of the rear right initiator circuit

C0586, HARNESS SIDE	C0586, HARNESS SIDE
Terminal 30	Terminal 31

7 Measure the resistance of the rear left initiator circuit

C0586, HARNESS SIDE	C0586, HARNESS SIDE
Terminal 18	Terminal 19

Are any of the initiator resistance measurements less than 1 Ohm?

Yes

Repair the short circuit as necessary

No

Install new tire pressure sensor(s) in the locations identified

WHEELS AND TIRES

WHEEL AND TIRE (G871873)

REMOVAL AND INSTALLATION

60.25.06	ROAD WHEEL - ALLOY - RENEW - INCLUDES CHANGING TIRE, VALVE AND BALANCING ASSEMBLY	ALL DERIVATIVES	0.5	USED WITHINS	+
74.10.06	WHEEL AND TIRE ASSEMBLY - EACH - REMOVE FOR ACCESS AND REFIT	ALL DERIVATIVES	0.2	USED WITHINS	+

REMOVAL

1. **WARNING:**

> Do not work on or under a vehicle supported only by a jack. Always support the vehicle on safety stands.

Raise and support the vehicle.

2. **NOTE:**

Left-hand shown, right-hand similar.

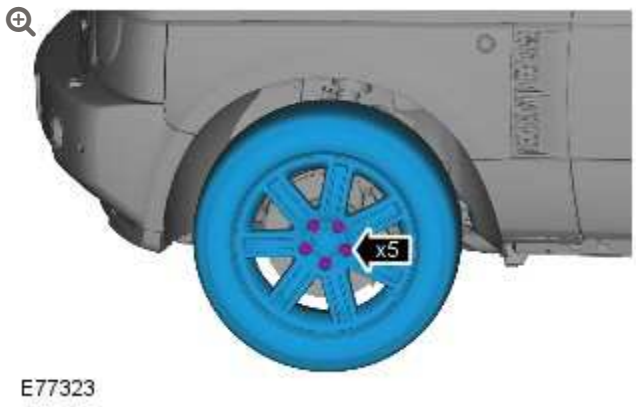

Remove the wheel and tire.

- Remove the 5 nuts.

INSTALLATION

1. **CAUTION:**

Apply a small amount of grease to the hub and wheel mating surfaces before installation. Make sure the grease does not come into contact with the vehicles braking components and the wheel stud threads. Failure to follow these instructions may result in personal injury.

To install, reverse the removal procedure.

- Tighten the wheel nuts to 140 Nm (103 lb.ft).

2012.0 RANGE ROVER (LM), 204-04

WHEELS AND TIRES

DESCRIPTION AND OPERATION

NOTES:

- The majority of TPMS **"faults"** , are not genuine component faults, but low pressure warnings, indicating the tyres have lost air, and have reached the point where the TPMS ISO light has been illuminated.
- There is also a TPMS diagnostic flow mapped into the approved Jaguar diagnostic tool, helping technicians to diagnose different possible faults.

TPMS valve snaps

If the TPMS valve has snapped, then inspect the TPMS wheel unit and decide if it is a two part construction, or is a one piece part.

If the TPMS wheel unit is a TG1B wheel unit, then replace the wheel unit with the same part (subject to supersession as per the Land Rover Electronic Parts Catalogue).

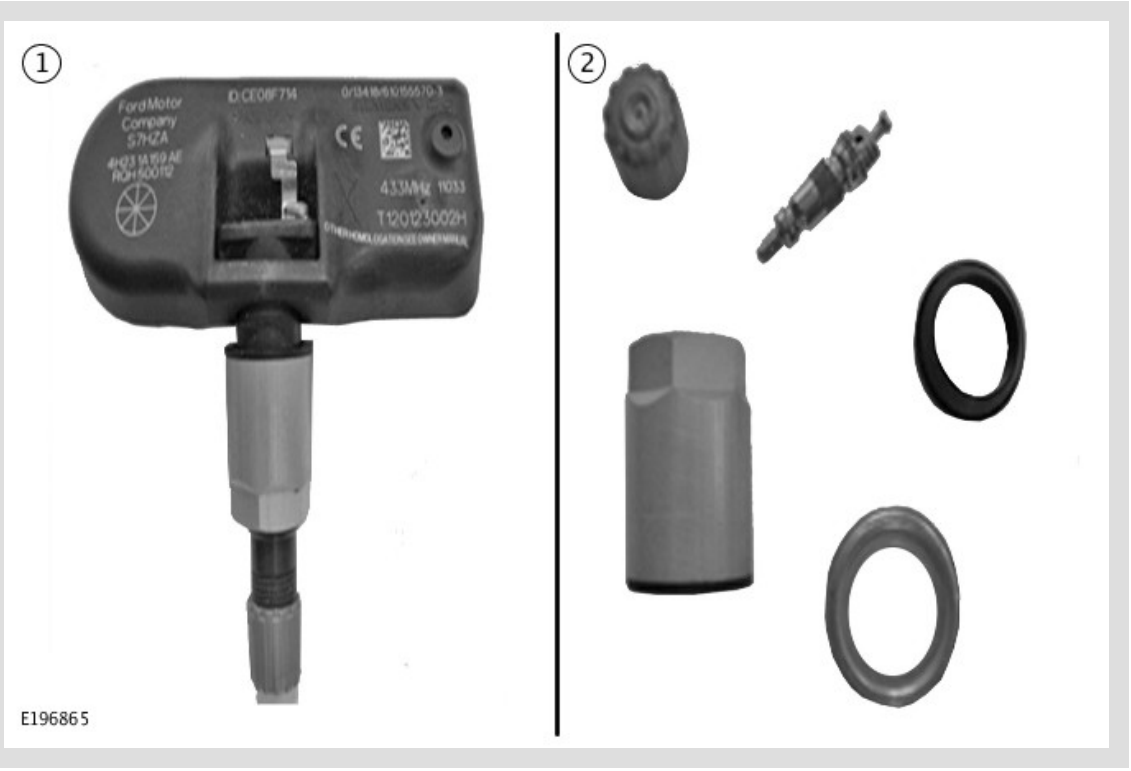

1 TG1B Valve - complete valve.

2 TG1B - Service kit.

NOTE:

Please note that Jaguar Land Rover does not cover the snapped/damaged TPMS under warranty, this is not a manufacturing defect.

If the TPMS wheel unit is a TG1C, two part TPMS wheel unit, where the valve stem can be separated use part number LR043162, valve stem kit containing 5 replacement valve stems, nuts and washers.

UK markets only - valve stem kit with a shorter valve stem use part number LR077043.

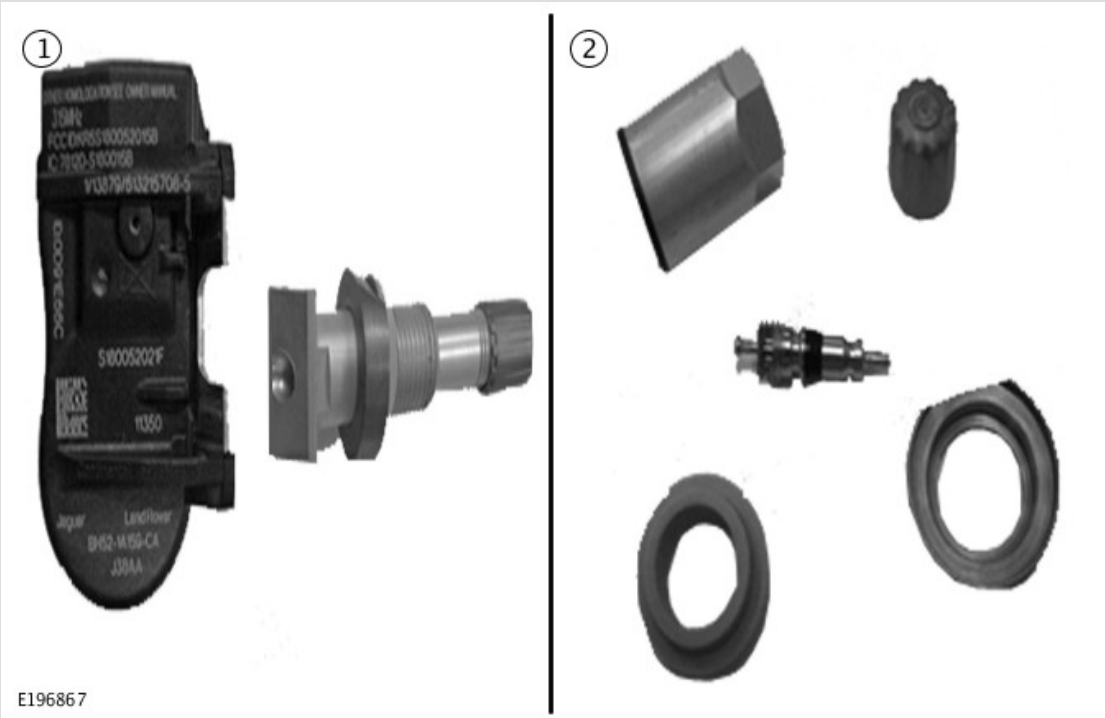

1 TG1C Modular Valve, split in two halves mechanical and electronic modules - available as 5 piece set and as 1 piece.

2 TG1C Valve - whole/entire valve.

NOTE:

Please note that Jaguar Land Rover does not cover the snapped/damaged TPMS under warranty, this is not a manufacturing defect.

1. TPMS Instrument Cluster Warnings

Turn the ignition on and look at the instrument cluster.

Does the TPMS ISO symbol flash for 72 seconds, and then stay on permanent: Yes go to **section 2.0** .

Is the TPMS ISO Symbol illuminated permanently on the instrument cluster? Yes go to **section 1.1** .

If the TPMS ISO symbol does not illuminate: There is no fault or problem present on the vehicle at this time.

Ask the customer if they have used a spare wheel fitted with a rubber valve, as this will cause a TPMS symptom fault to be displayed, this is expected behaviour, and there is no fault with the TPMS system. The use of a spare wheel is described in the vehicle handbook.

Ask the customer if the instrument cluster displayed one or more wheels at 0 pressure. If yes go to **section 1.2** .

Ask the customer if the instrument cluster displayed a warning TPMS message. If yes go to **section 1.3** .

Ask the customer if the TPMS fault message came on during a drive, and if the message cleared during a drive cycle. If the customer does indicate this happened, ask the customer if they have used additional accessories

in the vehicle such as: USB chargers, insurance cameras, DC-DC converters, cool boxes, satellite navigation and radar detectors, when the TPMS fault light came on. If the answer is yes, ask the customer to remove the items, and see if the TPMS fault light does not come on, during the next drive cycles.

1.1 Low Pressure Warnings

When the TPMS ISO symbol is illuminated permanently, or comes on during a drive cycle, the TPMS system has detected that one or more tires are below the 80% requirement of the required pressure. The required pressure in the tire changes due to the temperature of the air inside the tire, being heated by the tire movement.

The instrument cluster will display an image of the vehicle showing which tire(s) are below the 80% of the required pressure. If only one wheel is low pressure then that wheel will be highlighted in yellow showing the actual pressure and the Recommended Cold Pressure (RCP) to inflate to.

The message to check all tires is highlighted because if the tire has naturally lost air, then the other three tires will also be close to the threshold to set the warning.

Using the instrument cluster menu, use the menu and arrow keys on the steering wheel to navigate to the TPMS menu, and select the pressure check option. View the pressures of the tires, and add air to the tires as required. The correct pressure is shown in the pressure menu, on the instrument cluster. The Recommended Cold Pressure (RCP) is also shown on the tire label at the bottom of the B-pillar.

The instrument cluster should update as air is being placed into the tires. If the instrument cluster does not update, then drive the vehicle for 3 minutes above 15 Mph. This will make sure the RF signals from the TPMS wheel units are received.

1.2 Instrument cluster displays one or more tires at 0 pressure without an ISO TPMS symbol illuminated



If the instrument cluster is showing one or more tires at 0 pressure, then inflate the tire by 300kPa, and check the instrument cluster to see if the tire pressure has updated. If not then drive the vehicle for 8 minutes above 20 Kph for the TPMS sensors to localise.

1.3 TPMS warning messages

1.3.1 Non EU or Non NAS market TPMS warning messages

In non EU or non NAS markets, when rubber valves are fitted, the TPMS instrument cluster will display the message **"Tire monitoring not available"** , after 10 minutes of driving. The instrument cluster message **"Tire monitoring not available"** , will come on every subsequent ignition cycle, until the TPMS sensors are re-fitted.



The instrument cluster message **"Tire Pressure Monitoring Available"** , will be displayed on the instrument cluster when all four TPMS wheel sensors have been detected, and will display for 20 seconds.

1.3.1 All market warning messages

The instrument cluster message **"Tire Pressures too low for high speed"** and the TPMS ISO symbol will be displayed when the tire pressures are 80% below the required pressure for high speed driving.

The instrument cluster and the tire pressure label at the bottom of the B-pillar on the driver’s side of the vehicle will show the required tire pressures for high speed driving.

1.4 NAS market

The load setting of the vehicle may be changed in the load setting menu, (vehicle dependant).



1.4.1 The instrument cluster message, **"Tire Pressure set for Light"** , is a reminder that the load switching has been set to the light setting, and are the lower of the tire pressures recommended.

1.4.2 The instrument cluster message, **"Tire Pressures set for Normal"** , is a reminder that the load switching has been set the normal setting, and is the highest tire pressures recommended.

1.5 EU and ROW markets

The load setting of the vehicle may be changed in the load setting menu, (vehicle dependant).



1.5.1 The instrument cluster message, **"Tire Pressure set for light"** , is a reminder that the load switching has been set to the light setting, and are the lower of the tire pressures recommended.

1.5.2 The instrument cluster message, **"Tire Pressures set for Heavy"** , is a reminder that the load switching has been set the Heavy setting, and is the highest tire pressures recommended.

2.0 TPMS faults

2.1 Wheel cannot be detected.

Using the instrument cluster menu, with the ignition on and the vehicle stationary, does the instrument cluster show one or more wheels with a yellow cross highlighted above the wheel? No then go to **section 2.2** .



Check the wheel(s) to see if a rubber valve has been fitted. If it has, replace with a TPMS valve. **Jaguar Land Rover will not pay for the warranty.**

If the wheel has a TPMS valve go to **section 2.2** .

2.2 TPMS Fault messages

Plug in the approved Jaguar diagnostic tool and read the DTCs from the TPMS wheel unit.

2.2.1 NAS markets only

NAS market note the TPMS frequency has been set to 433 MHz from 16MY for all vehicles.

VIN change for 433 MHz, for earlier model years.

- Discovery LR4 (L319) 14MY starting with VIN LA696287.
- Range Rover LG (L405) 14MY starting with VIN LG140913.
- Range Rover Sport LW (L494) 14MY starting with VIN LW319924.
- Range Rover Evoque LV (L538) 15MY 433 MHz starting with VIN SALVA2BC7FH933449.
- Freelander 2 LR2 (L359) stayed on 315 MHz.

2.2.1 EU Markets

EU markets the TPMS system is always 433 MHz.

2.2.2 Wheel units not recognised from start of a drive cycle

C1D21-05 (Any wheel unit - Failed reception from beginning of TPMS Drive cycle).

Possible Causes:

1. Rubber valve fitted go to **section 2.1** .
2. 315 MHz TPMS wheel unit fitted on a 433 MHz vehicle. NAS markets Inspect wheel unit, if a 315 MHz wheel unit fitted Jaguar Land Rover will not pay for a replacement.
3. TPMS wheel unit in ship mode (turned off), customer purchased part, Using a handheld LF tool, turn the TPMS wheel unit on. Jaguar Land Rover will not pay for this as customer purchased.

- If no TPMS LF hand tool available, then change the TPMS wheel unit to a new one. Jaguar Land Rover will not pay for a replacement, as part not purchased through approved process.

4 The TPMS wheel unit battery has failed or the wheel unit has been damaged when tire was replaced.

Replace the identified wheel unit.

> **NOTE:**
>
> Please note that Jaguar Land Rover does not cover these cost under warranty, this is not a manufacturing defect.

2.2.3 Wheel units not recognised during a drive cycle

C1A56-93 (Left Front Tire Pressure Sensor and Transmitter assembly no operation (During TPMS drive cycle).

C1A58-93 (Right Front Tire Pressure Sensor and Transmitter assembly no operation (During TPMS drive cycle).

C1A60-93 (Left rear Tire Pressure Sensor and Transmitter assembly no operation (During TPMS drive cycle).

C1A62-93 (Right rear Tire Pressure Sensor and Transmitter assembly no operation (During TPMS drive cycle).

Causes:

1 One or more wheels swapped over in less than 15 minutes (winter wheel warehouse replacement).

2 RF interference of the TPMS signal from the wheel units to the receiver.

3 TPMS wheel unit damaged.

4 Battery failing, (wheel unit over 6 years old).

Go to **section 3.0** .

2.2.4 Wheel unit localisation

C1D18-00 Wheel localisation failed.

The TPMS system needs to receive the RF transmissions from all 4 wheel units, to enable the location of the TPMS wheel unit and the TPMS wheel unit ID to be matched. If a rubber valve has been fitted to a wheel, or the TPMS sensor is not transmitting, then on the fourth journey, (greater than 10 mins), a localisation DTC will be set.

Make sure all 4 TPMS wheel units are working using the approved Jaguar Land Rover diagnostic tool deflation test.

If there is RF interference, this can cause the localisation to fail.

Check the initiators are correctly located in the wheel arches, as they can be connected into the circuits from the CJB/BCM, but might not be correctly located, especially if the bumper has been changed.

Go to section 3.0

2.2.5 K line serial interface communication problems between Central Junction Box (CJB) or Body Control Module (BCM) and the TPMS receiver

U201F-87(External Receiver missing message) – open circuit

U201F-11(External Receiver short to Ground)

U201F-12(External Receiver Short to battery)

Check the software of the BCM/CJB, (Central Junction Box).

If the CJB/BCM software revision for the following vin ranges is earlier than AJ, make sure the software update is actioned:

- L405 Range Rover (LG), model years: 2014 – 2015, VIN range: LG124984 – LG203069
- L494 Range Rover Sport (LW), model years: 2014 – 2015, VIN range: LW600000 – LW603392
- L494 Range Rover Sport (LW), model years: 2014 – 2015,VIN range: LW000015 – LW509446.
- L538 Range Rover Evoque (LV), model years: 2014 – 2015, VIN range: LV856653 – LV996110
- L538 Range Rover Evoque (LV), model years: 2015, VIN range: LV000007 – LV011753

2.2.6 External receiver internal failure

U201F-04, ignore any other DTCs

Check tire pressure monitoring system RF receiver fuse.

Clear the DTC and retest. If fault persists, check and install a new tire pressure monitoring system RF receiver.

2.2.7 Initiator Circuit DTCs

C1A61-14(Left rear initiator Circuit short to ground or open)

C1A61-12(Left Rear initiator Short to battery)

C1A63-14(Right rear initiator Circuit short to ground or open)

C1A63-12(Right Rear initiator Short to battery)

C1A59-14(Right Front initiator Circuit short to ground or open)

C1A59-12(Right Front initiator Short to battery)

C1A57-14(Left Front initiator Circuit short to ground or open)

C1A57-12(Left Front initiator Short to battery)

> △ **NOTE:**
>
> Two or more of the above DTCs may be set with DTC C1D18-00. If that is the case C1D18-00 should be ignored and the fault causing the above DTCs should be fixed.

Check for either open circuit, short to ground, short to power (depending on occurring DTC description above). Please check, as well, if the connector is correctly latched.

3.0 Wheel unit investigation

Break the bead and inspect the TPMS wheel unit and compare the wheel unit ID, with the wheel ID as read by the approved Jaguar Land Rover diagnostic tool. If the TPMS wheel IDs are different, programme the new wheel ID into the approved Jaguar Land Rover diagnostic tool, and run the deflation test. Make sure the TPMS wheel unit is working.

If the TPMS wheel unit is not detected with the new wheel unit, then ask the customer where the TPMS wheel unit was purchased. The wheel unit is in ship mode, and needs to be put into park mode with a LF tool.

NOTE:

Jaguar Land Rover will not pay the warranty for this claim, this is not a manufacturing defect.

VEHICLE DYNAMIC SUSPENSION

SPECIFICATIONS

Air Suspension - General Specification

ITEM	SPECIFICATION
Ride height:	
Off road	55 mm (2.1 in) above standard
Access - reselectable whilst vehicle is moving	40 mm (1.6 in) below standard
High speed mode - non-selectable	20 mm (0.8 in) below standard
Trim height	Configured using the Land Rover approved diagnostic system
Height sensors:	
Location	Mounted to front and rear subframes with mechanical linkage to suspension lower arms
Height sensor arm color coding:	
Left hand side, front and rear	WHITE
Right hand side, front and rear	BLACK
Height sensor operating voltages:	

ITEM	SPECIFICATION
Supply voltage	5 volts - supplied by air suspension control module
Output voltage	**Left-hand and right-hand rear:** Voltage decreases with compression and increases with rebound **Left-hand and right-hand front:** Voltage increases with compression and decreases with rebound
Spring/damper module types:	
Front	Unguided air spring surrounding twin tube damper
Rear	Unguided air spring, separate mono-tube damper
Pressures:	
Normal - Front	800 to 1000 kPa (8.0 to 10.0 bar) (116.0 to 145.0 lbf/in²)
Normal - Rear	500 to 800 kPa (5.0 to 8.0 bar) (72.5 to 116.0 lbf/in²)
Air supply unit:	Comprises a piston compressor, 12 volt electric motor, solenoid operated exhaust pilot valve, pressure relief valve, air dryer unit and two silencers
Controlled by	Air suspension control module
Working pressure	1450 kPa (14.5 bar) (210.3 lbf/in²)
Maximum pressure	2700 kPa (27 bar) (391.6 lbf/in²)
Air reservoir:	
Volume	10.2 liters (622 cu.in)
Nominal working pressure	1440-1550 kPa (14.4-15.5 bar) (208.85-224.8 lbf/in²)
Maximum operating pressure	2200 kPa (22 bar) (319 lbf/in²)
Reservoir valve block	Incorporates pressure sensor to monitor spring and air reservoir pressures
Valve blocks:	
Front	2 corner valves, 1 cross link valve - all mounted at rear of right-hand front wheel arch behind liner
Rear	2 corner valves, 1 cross link valve - all mounted at right-hand rear wheel arch behind liner, adjacent to the fuel filler pipe

ITEM	SPECIFICATION

Torque Specifications

DESCRIPTION	NM	LB-FT
Air suspension compressor mounting bolts	10	7
Air suspension compressor upper and lower cover bolts	10	7
Voss connector to the front solenoid valve block	2.5	1.7
Voss connector to the rear solenoid valve block	2.5	1.7
Voss connector to the air suspension reservoir	5	4
Air suspension reservoir bolts:		
M6 bolt	10	7
Torx bolt	25	18
Air suspension pressure switch	5	4
Air suspension compressor drier screw	3	2.2
Air suspension compressor muffler bolts	10	7
Suspension height sensor Torx bolts	2	1.5

2012.0 RANGE ROVER (LM), 204-05

VEHICLE DYNAMIC SUSPENSION

DESCRIPTION AND OPERATION

COMPONENT LOCATION

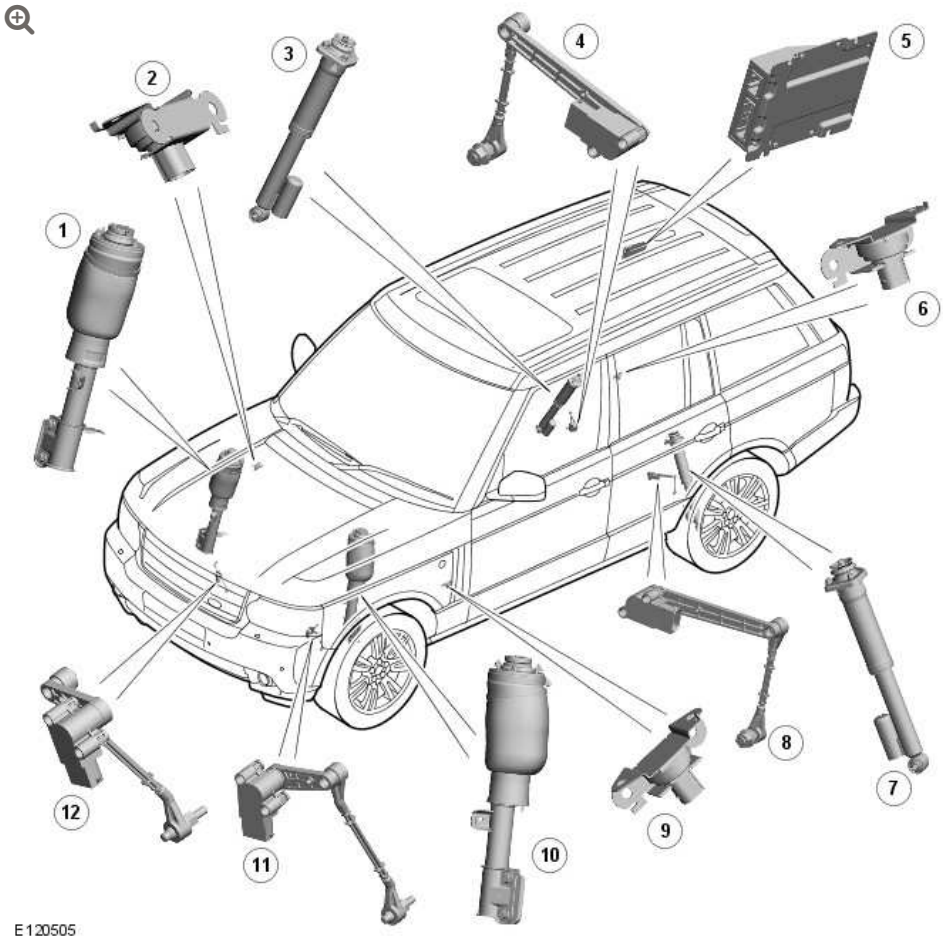

ITEM	DESCRIPTION
1	RH (right-hand) Front Shock Absorber Assembly

ITEM	DESCRIPTION
2	RH Front Accelerometer
3	RH Rear Shock Absorber Assembly
4	RH Rear Height Sensor
5	Adaptive Damping Module (ADM)
6	RH Rear Accelerometer
7	LH (left-hand) Rear Shock Absorber Assembly
8	LH Rear Height Sensor
9	LH Front Accelerometer
10	LH Front Shock Absorber Assembly
11	LH Front Height Sensor
12	RH Front Height Sensor

Continuously variable damping, known as Adaptive Dynamics, is available on Range Rover. Adaptive dynamics is an electronically controlled suspension system which continuously adjusts the damping characteristics of the suspension dampers in reaction to the current driving conditions.

Application of adaptive dynamics can be either a standard or option fit, dependant on vehicle variant.

The system is controlled by an Adaptive Damping Module (ADM). The ADM receives signals from three accelerometers, four suspension height sensors and from other vehicle systems to determine vehicle state, body and wheel motions and driver inputs. These signals are used by the ADM to continuously control the damping characteristics of each damper to the appropriate level resulting in optimum body control and vehicle ride.

DAMPERS

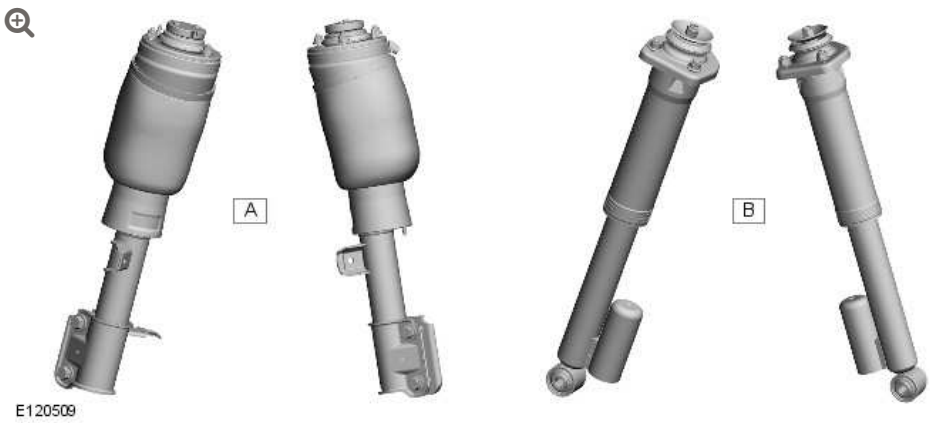

ITEM	DESCRIPTION
A	Front Dampers
B	Rear Dampers

The adaptive dynamics dampers are monotube, nitrogen gas and oil filled units. The dampers are continuously variable, which allows the damping force to be electrically adjusted when the vehicle is being driven. The dampers provide the optimum compromise between vehicle control and ride comfort. To maintain wheel travel, the rear dampers feature an additional external accumulator. This is to provide adequate rebound travel by recovering the volume through the external source. All the dampers have an electrical connector on the end of the piston rod, in the center of the top mount.

In each damper, the damping adjustment is achieved by a solenoid operated variable orifice, which opens up an alternative path for oil flow within the damper. When de-energized the bypass is closed and all the oil flows through the main (firm) piston. When energized the solenoid moves an armature and control blade, which work against a spring. The control blade incorporates an orifice which slides inside a sintered housing to open up the bypass as required. In compression, oil flows from the lower portion of the damper through a hollow piston rod, a separate soft (comfort) valve, the slider housing and

orifice and into the upper portion of the damper, thereby bypassing the main (firm) valve. In rebound the oil flows in the opposite direction.

In the firm setting oil flows through the main (firm) valve only, but when the bypass is opened by any amount the oil flows through both valves in a pressure balance. When fully energized the solenoid moves the armature and therefore the slider to the maximum extension and opens the orifice completely. The damper operates continuously between these two boundary conditions.

The solenoid in each damper is operated by a 526 Hz PWM signal from the ADM. When fully energized, the ADM applies a 1.5 A current to operate the damper in the soft setting. When de-energized (0.0 A) the damper is in the firm setting. The current varies continuously as required to increase and decrease the damping individually in each of the dampers.

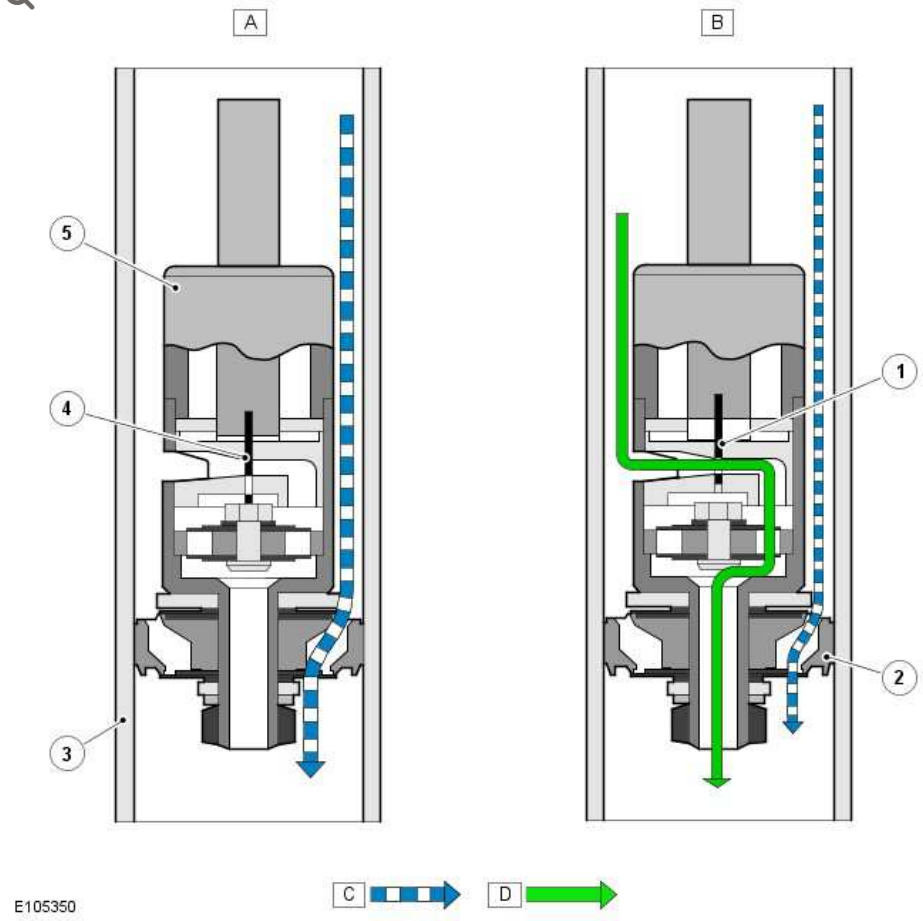

ITEM	DESCRIPTION
A	Firm Setting
B	Soft Setting
C	Main Oil Flow
D	Bypass oil flow
1	Bypass valve (open)
2	Main valve
3	Tube
4	Bypass valve (closed)
5	Piston and rod assembly

ACCELEROMETERS

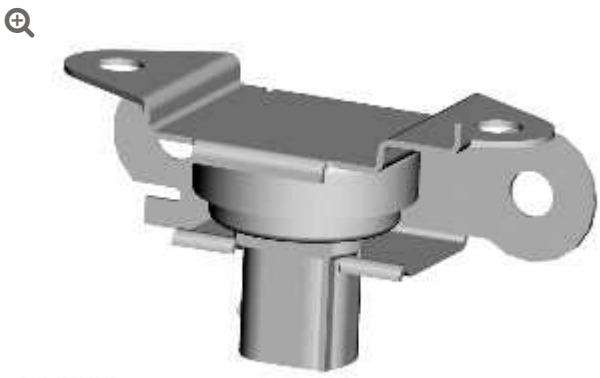

Three accelerometers are used in the adaptive dynamics system.

Accelerometers locations are as follows

- Front left A pillar area (behind front wing)
- Front right A pillar area (behind front wing)
- Right rear luggage floor
- Center front bulkhead area (below wind shield)
- Right rear luggage area (behind light unit)
- Left rear luggage area (below rear window)

The accelerometers measure acceleration in the vertical plane and output a corresponding analogue signal to the ADM. The algorithms in the ADM calculate the heave, pitch and roll motions of the vehicle, which are used by the controller to control road induced body modes.

Each accelerometer is connected to the ADM via three wires, which supply ground, 5 V supply and signal return.

The sensing element comprises a single parallel plate capacitor, one plate of which moves relative to the other dependant on the force (acceleration) applied. This causes the capacitance to change as a

function of applied acceleration. This capacitance is compared with a fixed reference capacitor in a bridge circuit and the signal is processed by means of a dedicated integrated circuit to generate an output voltage that varies as a function of applied acceleration. The sensors output a signal voltage of approximately 1 V/g ± 0.05 V/g.

HEIGHT SENSORS

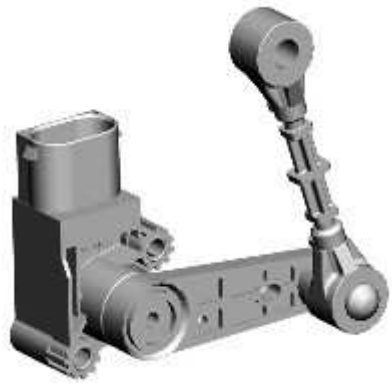

The four suspension height sensors that are used in the air suspension system also supply input to the adaptive dynamics system, two for the front suspension and two for the rear suspension. A front suspension height sensor is attached to each side of the front subframes and connected by a sensor arm and sensor link to the related lower lateral arm of the front suspension. A rear suspension height sensor is attached to each side of the rear subframe and connected by a sensor arm and sensor link to the related upper control arm of the rear suspension. On each suspension height sensor, the sensor arm and sensor link convert linear movement of the suspension into rotary movement of the sensor shaft.

The suspension height sensors measure suspension displacement at each corner of the vehicle and output a corresponding analogue signal to the ADM. The algorithms in the ADM calculate the position, velocity and frequency content of the signals and use the results for wheel control.

HEIGHT SENSOR WIRING

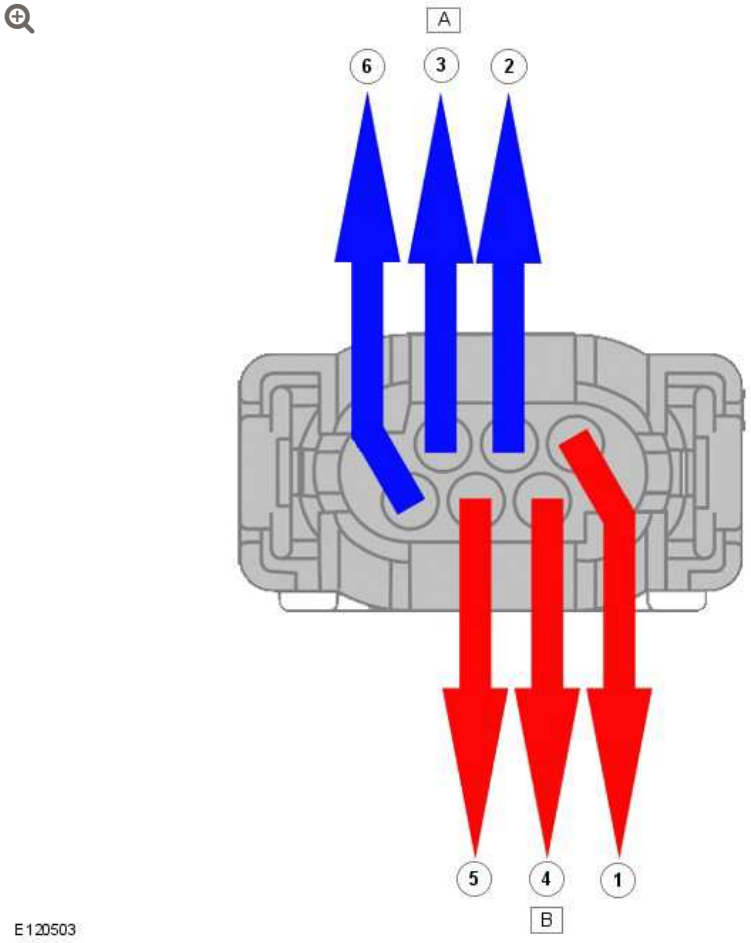

ITEM	DESCRIPTION
A	Adaptive Damping Module
B	Air Suspension Module
1	Ground
2	Ground
3	5v Supply
4	Signal Output (Air Suspension)
5	5v Supply
6	Signal Output (ADM)

The sensing element consists of an array of hall effect devices arranged to measure the direction of the magnetic field of a small

magnet attached to the end of the sensor shaft. As the sensor shaft rotates, so do the lines of magnetic flux from the magnet. The signals from the Hall effect elements are processed by means of a dedicated integrated circuit to generate an output voltage that varies as the sensor shaft is rotated. The sensor has a measurement range of ± 40° around its nominal position and the nominal sensitivity is 57 mV/° of shaft rotation. The graphic below [Fig:9] describes the repetition of the output signal as the sensor is rotated through and beyond 40°

Height Sensor Voltage

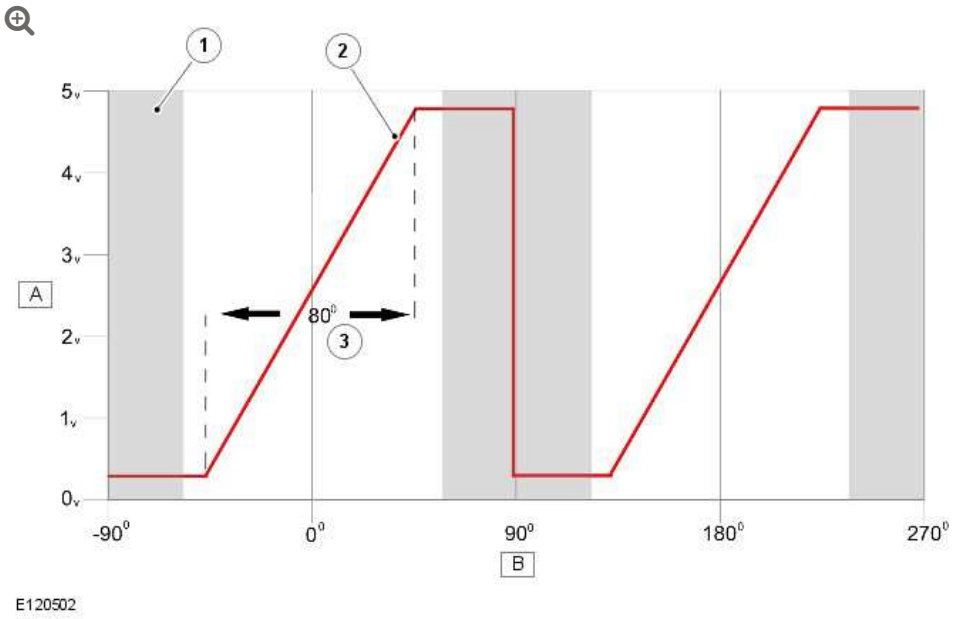

ITEM	DESCRIPTION
A	Sensor voltage
B	Angle of rotation
1	Outside measuring range
2	Voltage output
3	40 degree measuring range

ADAPTIVE DAMPING MODULE (ADM)



The adaptive damping module (ADM) is located in the RH rear quarter panel.

GENERAL

The air suspension system is a four corner system which is fitted to all models.

The system is electronically controlled by an air suspension control module which controls the air supply unit, reacts to inputs from four height sensors and distributes air around the system via valve blocks.

The main air suspension system components are:

- Air suspension control module
- Air supply unit
- Four height sensors
- Three valve block assemblies
- Reservoir
- Air harness
- Two front struts incorporating air spring damper modules
- Two rear air spring modules.

- Adaptive Damping Module (ADM)
- Air Suspension Switch

The four corner air suspension system maintains the vehicle height under all operating conditions by controlling the mass of air in the air springs. The air suspension control module uses signals from the four height sensors to maintain the correct suspension height, irrespective of vehicle load. Additionally, the system allows the driver to request ride height changes to improve off-road performance or ease access or loading. The system automatically adjusts the ride height to improve the vehicle handling and dynamics when speed increases or decreases. This is achieved by operating pneumatic control valves to increase or decrease the mass of air in the air springs.

The air suspension system has three driver selectable, pre-determined ride heights and an automated high speed ride height. A driver interface indicates the selected ride height and height change movement. Additional information is also relayed to the driver via the instrument cluster message center and by audible warnings also transmitted by the instrument cluster.

Most height changes can only be made when the engine is running and the driver's and passenger doors are closed.

The air suspension can be controlled manually by the driver using a switch on the floor console to select the required height change.

Access height can be selected using a switch on the floor console or a switch on the drivers door.

The system will temporarily inhibit height adjustments when the vehicle is subject to cornering, heavy acceleration or heavy braking. The inhibit function prevents unsettling of the vehicle by increasing the effective spring rates.

Height changes are also restricted for safety reasons, when a door is opened and the vehicle is stationary for example.

The air suspension system fitted to Range Rover is controlled by the air suspension control module which is located behind the RH rear quarter panel. The control module monitors the height of each corner of the vehicle via four height sensors, which are mounted in-board of each road wheel. The control module also performs an 'on-board diagnostic' function to perform 'health checks' on the system. If faults are detected, codes are stored in the control module and can be retrieved using the Land Rover approved diagnostic system.

The suspension geometry changes when moving from off-road to access heights. See the following table for data:

	FRONT	REAR
Toe change	30 mins	10 mins
Camber change	90 mins	90 mins

RIDE HEIGHT TOLERANCE CONTROL

The air suspension control module has two ride height tolerance bands; normal tolerance and tight tolerance.

The control module considers the vehicle to be at target height if the current height is within the appropriate tolerance band. Height adjustments are not made until the vehicle height falls outside of the tolerance band for a pre-determined time. The time period is different depending on if the vehicle is moving or stationary. The tolerance bands are as follows:

- Normal ± 10 mm
- Tight ± 3 mm.

The tight tolerance band is only used if set by the Land Rover approved diagnostic system for diagnostic purposes or when the vehicle has been stationary for more than 5 minutes.

OPERATING MODES

The driver can manually select, using the air suspension switch, one of four ride states:

- ON-ROAD - this height is the normal operating height of the vehicle
- OFF-ROAD - this height is higher than the on-road height and provides improved ground clearance, approach, departure and breakover angles
- ACCESS - this height is lower than the on-road height and makes entering and exiting the vehicle easier for the occupants
- CRAWL (Locked at access) - this mode allows the vehicle to be driven at the access height at low speeds to provide increased roof clearance in low car parks etc.

HIGH SPEED - A non-selectable, automatic high speed mode is provided which lowers the vehicle height to improve vehicle handling.

NOTE:

Vehicle height changes are restricted if the air suspension control module receives a 'Door Open' signal and the speed is less than 5 mph (8 km/h).

A complete vehicle delivery mode is available but is only selectable using the Land Rover approved diagnostic system. When this mode is active most vehicle systems, in addition to the air suspension, are

inhibited or restricted to a minimal functionality. In this mode the air suspension is set to the transportation mode.

If the air suspension control module senses that the vehicle has grounded and lost traction, the control module can temporarily increase and/or redistribute the volume of air supplied to the affected air spring(s) to maximize the available traction. This is known as extended mode and will be indicated to the driver by the lamps on the air suspension switch flashing.

If the air suspension control module senses that the vehicle is prevented from moving upwards or downwards during a height change or leveling correction, the control module will adopt a safe state and further height changes will be suspended.

If a fault is detected by the air suspension control module, the control module will reduce the system functionality dependent on the type and severity of the fault. The control module will also store a fault code which can be retrieved using the Land Rover approved diagnostic system. If a severe fault occurs, the control module will attempt to put the vehicle in a safe condition. A fault is relayed to the driver by the instrument cluster message center and an audible warning emitted from the instrument cluster.

If the detected fault is minor and does not affect vehicle safety, the instrument cluster message center will display the message 'SUSPENSION FAULT' and a chime will be emitted. The fault should be investigated and rectified as soon as possible.

If the detected fault is more serious, the message center will display the message 'SUSPENSION FAULT NORMAL HEIGHT ONLY' and a chime will be emitted. The fault should be investigated and rectified as soon as possible.

If a fault is detected within the DSC (dynamic stability control) the message 'SUSPENSION LOWERED FOR SAFETY' and a chime will be

emitted. This is not a fault with the air suspension system. The fault should be investigated and rectified as soon as possible.

If the detected fault is more severe the message center will display the message 'SUSPENSION FAULT MAX SPEED 50KPH' and two chimes will be emitted every thirty seconds if this speed is exceeded. The message will change to 'SUSPENSION FAULT' when the vehicle speed is reduced to less than 31 mph (50 km/h). The vehicle should be driven slowly until the fault is rectified.

All information messages will be displayed for four seconds.

Air Suspension Control Switch

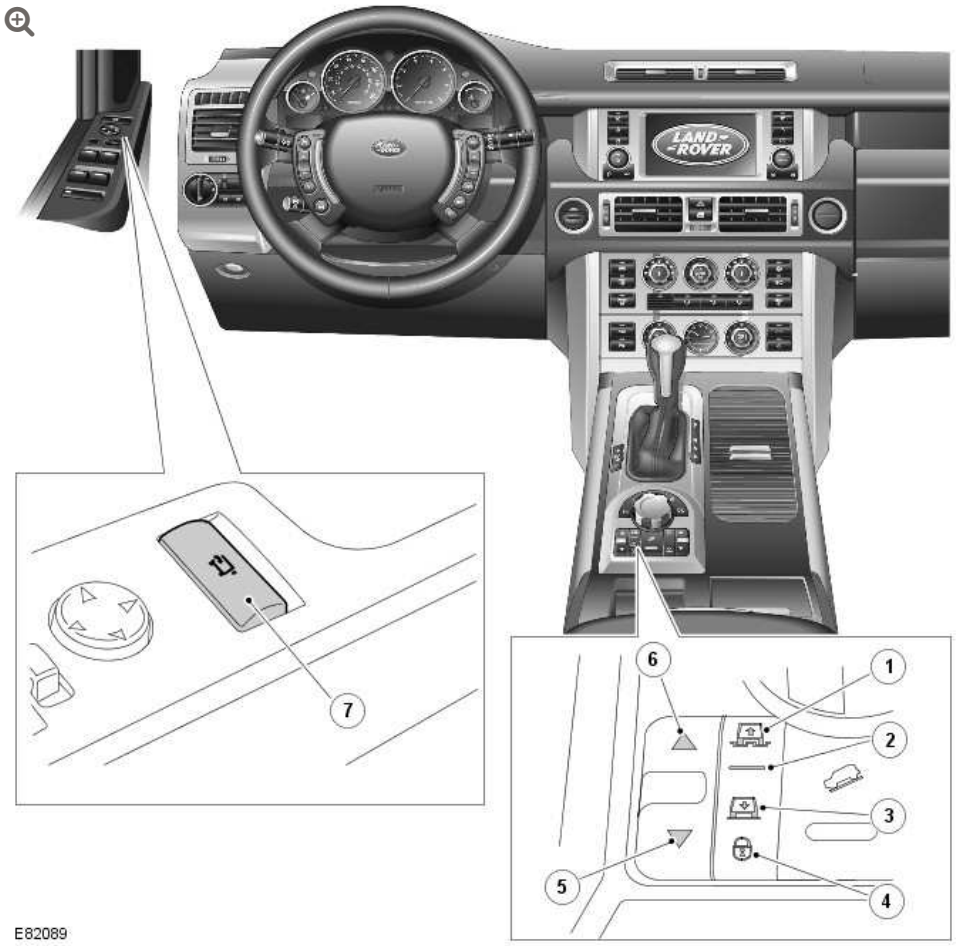

ITEM	DESCRIPTION
1	Off-road height light emitting diode (LED)
2	On-road (normal) height LED

ITEM	DESCRIPTION
3	Access height LED
4	Crawl mode LED
5	Height change (lowering) switch and LED
6	Height change (raising) switch and LED
7	Drivers door module access switch

ON-ROAD MODE

This is the normal ride height for the vehicle.

OFF-ROAD MODE

Off-road mode will only be selectable if the vehicle speed is less than 25 mph (40 km/h). The vehicle will be raised 55 mm (2.2 in) higher than the on-road mode to provide additional body clearance and improved approach, departure and breakover angles. If the vehicle speed exceeds 31 mph (50 km/h), the air suspension control module will automatically lower the vehicle to the on-road mode height. At 25 to 28 mph (40 to 45 km/h) a message is displayed in the message center to warn the driver to slow down or the vehicle will lower.

ACCESS MODE

Access mode lowers the vehicle body height by 40 mm (1.6 in) and provides easier entry, exit and loading of the vehicle. Access mode can be pre-selected when the vehicle is moving. The vehicle will partly lower as the vehicle speed decreases, lowering to the full access mode height when the vehicle reaches 5 mph (8 km/h). If the required road speed is not reached within a predetermined time, the air suspension will return the vehicle to the previously selected height.

Access mode can be selected at any vehicle speed. When access mode is selected, the response of the air suspension system will depend on the vehicle speed:

- If the vehicle speed is more than 12.5 mph (20 km/h), the air suspension control module will wait for up to one minute for the vehicle speed to be reduced. The access mode LED and the lowering LED will flash while the air suspension control module waits for the vehicle speed to be reduced, the on-road mode lamp will remain illuminated. If the vehicle speed is not reduced sufficiently, the access mode request will be cancelled after 1 minute.
- If the vehicle speed is less than 12.5 mph (20 km/h), the air suspension control module will lower the suspension to a part lowered height and will remain at this height for up to one minute. The on-road mode lamp will extinguish as the air suspension control module lowers the suspension to the part lowered height. The access mode lamp and the lowering LED will illuminate. When part lowered is reached, the lowering LED will flash. If the vehicle speed is not reduced to less than 5 mph (8 km/h) in the one minute period, the access mode request will be cancelled.
- If the vehicle speed is less than 5 mph (8 km/h), the suspension will be lowered to access mode immediately. The access mode LED and the lowering LED will illuminate. When the access mode height is reached, the lowering LED will be extinguished.

Access height may be selected up to 40 seconds after the ignition is turned off, provided that the driver's door has not been opened within this time.

The suspension will automatically rise from access mode when the vehicle speed exceeds 6.2 mph (10 km/h). If access mode was selected directly from off-road mode then the system will return to off-road mode when the vehicle speed exceeds 6.2 mph (10 km/h). Otherwise the system will lift the suspension to On-road height.

Selecting Access Mode Directly from Off-Road Mode

When the suspension is in off-road mode height, pressing the 'Access' height change switch once, or pressing the lowering switch twice before the lowering LED is extinguished, the control module will lower the suspension to access mode height. The control module will remember to return the suspension to off-road height automatically if the vehicle speed increases above 6.2 mph (10 km/h).

Alternatively, pressing the drivers door module access switch once will perform the same function.

CRAWL (LOCKED AT ACCESS) MODE

Crawl mode allows the vehicle to be driven at low speeds with the suspension locked at the access mode height. This allows the vehicle to be driven in low car parks etc. with increased roof clearance.

Crawl mode can be selected up to 21.7 mph (35 km/h) with a long press of the switch in a down direction. The access mode lamp and the crawl mode lamp will be illuminated. When the control module is in crawl mode, on-road mode height will be selected automatically if the vehicle speed exceeds 24.8 mph (40 km/h). At 18.6 to 21.7 mph (30 to 35 km/h) a message is displayed in the message center to warn the driver to slow down or the vehicle will raise. Crawl mode can also be manually cancelled by moving the switch in the up direction for 1 second. The crawl mode lamp will now be extinguished.

HIGH SPEED MODE

High speed mode is a non-selectable, automatic mode which lowers the vehicle height by 20mm to improve vehicle handling. This feature is fully automated and is 'invisible' to the driver.

If the vehicle speed exceeds 100 mph (160 km/h) for more than five seconds, the air suspension control module initiates the high speed mode. When the vehicle speed reduces to less than 80 mph (130 km/h) for more than 30 seconds, the vehicle returns to the On-Road

height. This function is cancelled if a trailer is connected to the trailer socket.

AUTOMATIC HEIGHT CHANGE WARNINGS

When the suspension is in off-road mode, access mode or crawl mode height, the air suspension control module will change the suspension height automatically when the vehicle speed exceeds a predetermined threshold.

When the suspension is at off-road mode or crawl mode height, the control module issues a warning to advise the driver that the vehicle is approaching the speed threshold. The instrument cluster sounder will emit a chime, a message will be displayed in the message center and the on-road mode LED and either the raising or lowering LED will flash.

The off-road mode or crawl mode height speed warning is removed when the vehicle speed is reduced.

SPECIAL MODES

DOOR OPEN FUNCTIONALITY

If one or more of the vehicle doors are opened during a height change when the vehicle is stationary, the air suspension control module will restrict further height change.

The LED on the air suspension LED display for the target mode height will remain illuminated and the raising or lowering LED will flash.

If all of the doors are closed within 90 seconds, the height change will resume. If the 90 second period is exceeded, the message 'CONFIRM REQUIRED SUSPENSION HEIGHT' will be displayed in the instrument cluster.

EXTENDED MODES

Raise Inhibit Raise inhibit is a reactive mode invoked when the following conditions are satisfied, vehicle speed below 10kph and vehicle raising very slowly. Raise inhibit is normally invoked when vehicle is lifting against an obstacle, it can also be used when the vehicle is winching or is tethered down.

JackingJacking is a reactive mode invoked when the following conditions are satisfied, vehicle stationary, system attempts to level the vehicle down and rate of vehicle lowering is below a predefined threshold for a predefined time. Jacking mode is normally invoked under the following conditions, vehicle jacking or vehicle grounded and stationary

Lower Inhibit Lower inhibit is a reactive mode invoked when the following conditions are satisfied, vehicle stationary, rate of vehicle lowering is below a predefined threshold for a predefined time. Lower inhibit is normally invoked under the following conditions, vehicle lowered onto an obstacle during a height change.

Belly-Out Belly-Out is a pro-active mode invoked when the following conditions are satisfied, vehicle moving and speed is below 50kph, traction activity is induced on axle pairs for fixed period of time and wheel heights above a predetermined threshold on coinciding axle pairs for the same fixed period of time. Belly-Out is normally invoked under the following condition, vehicle is attempting to move and with low levels of traction and supported by an obstacle.

Additional Lift Additional lift may be beneficial for extracting a stuck vehicle or trying to negotiate obstacles requiring pure ground clearance where a loss of articulation caused by the increase in ride height is acceptable. Additional lift can be activated the vehicle must be in extended mode

If the vehicle becomes grounded and the traction control becomes operational, the air suspension control module automatically

increases the mass of air in the air springs to raise the vehicle clear of the obstruction. Extended mode is activated automatically and cannot be selected manually.

When the air suspension control module has activated the extended mode, the off-road mode lamp will flash if the suspension is above off-road mode height. The off-road mode and on-road mode lamps will flash if the suspension is between off-road mode and on-road mode heights. The on-road mode and access mode lamps will flash if the suspension is between on-road mode and access mode. A message will also be displayed in the message center.

To exit the extended mode, press the air suspension switch briefly in the up or down position or alternatively drive the vehicle at a speed of more than 2 mph (3 km/h) for 45 seconds.

ADDITIONAL LIFT IN EXTENDED MODE

When extended mode has been invoked and the automatic lifting of the vehicle is complete, the driver can request an additional lift of the vehicle. This can be particularly useful when extended mode has been activated on soft surfaces.

The additional lift can be requested once the height change LED has extinguished. Press and hold the air suspension switch in the up position for 3 seconds whilst simultaneously depressing the brake pedal. A chime from the instrument cluster will sound to confirm that the request has been accepted. The raising LED will be illuminated while the vehicle is being lifted.

SUSPENSION PREVENTED FROM MOVING

If the air suspension control module is attempting to change the suspension height and it detects that the suspension is prevented from moving, the control module will stop all suspension movement. This can be caused by jacking the vehicle, attempting to lower the vehicle onto an object or raising the vehicle against an obstruction.

The air suspension switch lamps operate as described for extended mode and the same message is displayed in the message center. To re-start the air suspension system operating, press the air suspension switch briefly in the up or down position or drive the vehicle at a speed of more than 2 mph (3 km/h) for 45 seconds.

PERIODIC RE-LEVELING

When the vehicle is parked, the air suspension control module 'wakes up' two hours after the ignition was last switched off and then once every twenty four hours. The vehicle height is checked and if the vehicle is not level within a pre-set tolerance, small downwards height adjustments may be made automatically.

TRANSPORTATION MODE

Transportation mode is a factory set mode which locks the suspension to enable the vehicle to be safely lashed to a transporter. The suspension transportation mode is automatically set when the vehicle is configured for delivery mode using the Land Rover approved diagnostic system. Delivery mode also affects other vehicle systems which are inhibited or restricted to a minimal functionality.

When the ignition switch is switched off, the vehicle will be lowered onto the bump stops. This ensures that the securing straps do not become loose should air leak from the air springs.

When transportation mode is active, the air suspension switches are disabled. Periodic re-leveling is also disabled.

When the engine is started, the air suspension control module will cause the vehicle to rise to a height of –20mm to allow sufficient ground clearance for the vehicle to be loaded. While the height is changing, all the LED's in the air suspension control switch will flash and a chime will be emitted by the instrument cluster. When the height of –20mm is reached, all the LED's will illuminate continuously and the chime will stop.

When the engine is switched off, the air suspension control module will cause the vehicle to lower to a height of –60mm to allow the vehicle to be strapped down. While the height is changing, all the LED's in the air suspension control switch will flash. When the height of –60mm is reached, all the LED's will illuminate continuously.

CALIBRATION MODE

This mode is used when the air suspension control module has been replaced or a height sensor or suspension component has been dismantled or replaced.

The following conditions apply when the vehicle is in calibration mode:

- The ride height is set to tight tolerance
- Fault reaction to vehicle identification number (VIN) mis-match with the Car Configuration File (CCF) is disabled
- The raise, lower, access and hold switches are disabled
- System is controlled to on-road height only.
- Message "Air suspension not in customer mode" is displayed in the instrument pack.

AIR SUSPENSION COMPONENTS

The air suspension comprises the following:

- Two front struts incorporating air springs
- Two rear air springs
- Front and rear valve blocks
- Reservoir valve block incorporating a pressure sensor
- An air reservoir
- Four height sensors

- Air supply unit
- Air suspension control module
- Air supply pipes
- Air suspension control switch.

The air suspension system is controlled by the air suspension control module. The control module is located in the RH rear quarter panel.

VALVE BLOCKS

Front and Rear Valve Blocks

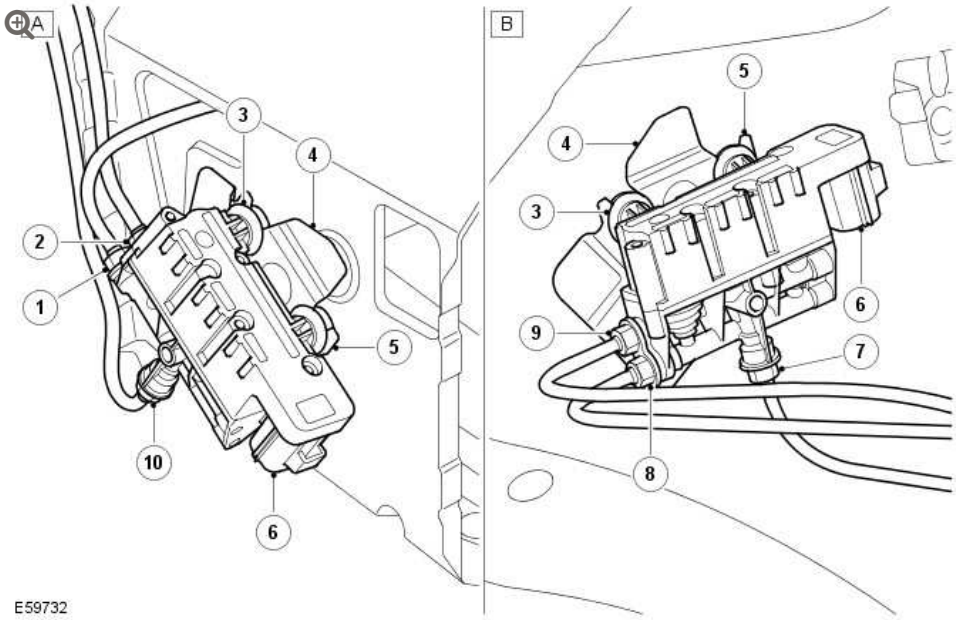

ITEM	DESCRIPTION
A	Front valve block
B	Rear valve block
1	Air inlet/outlet to reservoir valve block (Blue pipe)
2	RH front air spring harness connection (Yellow pipe)
3	Isolation rubber mounts
4	Mounting bracket
5	Location slots

ITEM	DESCRIPTION
6	Electrical connector
7	right-hand (RH) rear air spring harness connection (Yellow pipe)
8	Air inlet/outlet to reservoir valve block (Blue pipe)
9	left-hand (LH) rear air spring harness connection (Black pipe)
10	LH front air spring harness connection (Black pipe)

Reservoir Valve Block

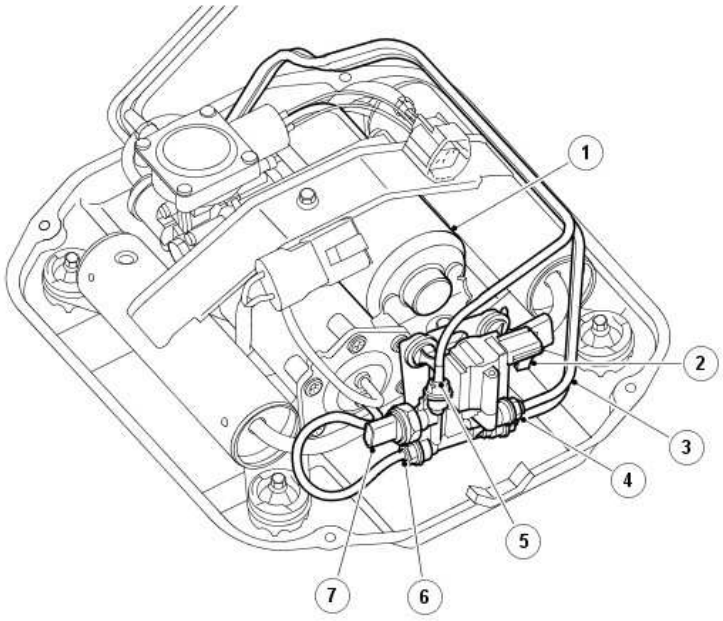

ITEM	DESCRIPTION
1	Air supply unit
2	Electrical connector
3	Air harness connection to reservoir (Black pipe)
4	Air inlet/outlet to rear valve block (Blue pipe)
5	Air inlet/outlet to front valve block (Blue pipe with white tape)
6	Air harness connection to air supply unit (Black pipe)
7	Pressure sensor

Front and Rear Valve Blocks

The front and rear valve blocks are similar in their design and construction and control the air supply and distribution to the front or rear pairs of air spring damper modules respectively.

The difference between the two valves is the connections from the valve block to the left and right hand air spring damper modules and the valve size. It is important that the correct valve block is fitted to the correct axle. Fitting the incorrect valve block will not stop the air suspension system from functioning but will result in slow raise and lower times and uneven raising and lowering between the front and rear axles and may result in misleading diagnostic trouble code (DTC)'s being set.

The front valve block is attached to a bracket at the rear of the right hand front wheel arch, behind the wheel arch liner. The valve block has three attachment lugs which are fitted with isolation rubber mounts. The rubber mounts locate in 'V' shaped slots in the bracket. The valve lugs locate in the holes above the slots and are pushed downwards into positive location in the slots.

The rear valve block is attached to a bracket at the top of the right hand rear wheel arch, behind the wheel arch liner and adjacent to the fuel filler pipe. The valve block has three attachment lugs which are fitted with isolation rubber mounts which locate in the bracket in three slotted holes. The isolation rubber mounts locate in the 'V' shaped slots and are pushed downwards into positive location in the slots.

The front and rear valve blocks each have three air pipe connections which use 'Voss' type air fittings. One connection is an air pressure inlet/outlet from the reservoir valve block. The remaining two connections provide the pressure connections to the left and right hand air springs.

Each valve block contains three solenoid operated valves; two corner valves and one cross-link valve. Each of the valve solenoids is individually controlled by the air suspension control module.

Reservoir Valve Block

The four way reservoir valve block is located in the air supply unit sealed housing. The valve block is attached to a bracket at the rear of the air supply unit on three attachment lugs which are fitted with isolation rubber mounts. The isolation rubber mounts locate in the 'V' shaped slots in the bracket and are pushed downwards into positive location in the slots.

The valve block controls the storage and distribution of air from the air supply unit and the reservoir and contains an integral system pressure sensor.

The valve block has four air pipe connections which use 'Voss' type air fittings. The connections provide for air supply from the air supply unit, air supply to and from the reservoir and air supply to and from the front and rear valve blocks. The connections from the air supply unit and the front and rear control valves are all connected via a common gallery within the valve block and therefore are all subject to the same air pressures.

The valve block contains a solenoid operated valve which is controlled by the air suspension control module. The solenoid valve controls the air supply to and from the reservoir. When energized, the solenoid opens the valve allowing air to pass to or from the reservoir.

The valve block also contains a pressure sensor which can be used to measure the system air pressure in the air springs and the reservoir. The pressure sensor is connected via a harness connector to the air suspension control module. The control module provides a 5V reference voltage to the pressure sensor and monitors the return

signal voltage from the sensor. Using this sensor, the control module controls the air supply unit operation and therefore limits the nominal system operating pressure to 14.5 bar gage (210 lbf/in^2).

The following graph shows nominal pressure values against sensor output voltage.

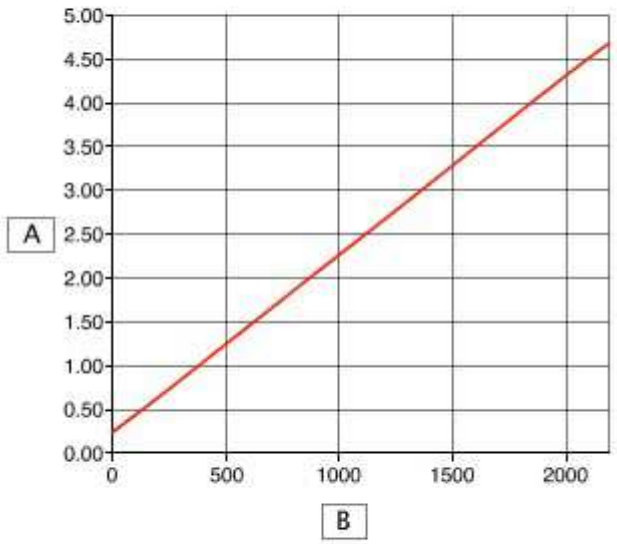

E61677

ITEM	DESCRIPTION
A	Output voltage (V)
B	Pressure (kPa)

Removal of the reservoir valve block will require full depressurization of the reservoir. The valve block is a non-serviceable item and should not be disassembled other than for replacement of the pressure sensor.

Valve Block Solenoid Specifications

DESCRIPTION	VALUE
Coil resistance at 20°C (68°F)	2.05 Ohms ± 10%

NOTE:

Resistance values will vary with coil temperature. Resistance of test leads must be measured before any readings are taken. Resistance value of the test leads must be subtracted from final solenoid resistance value.

AIR SUPPLY UNIT

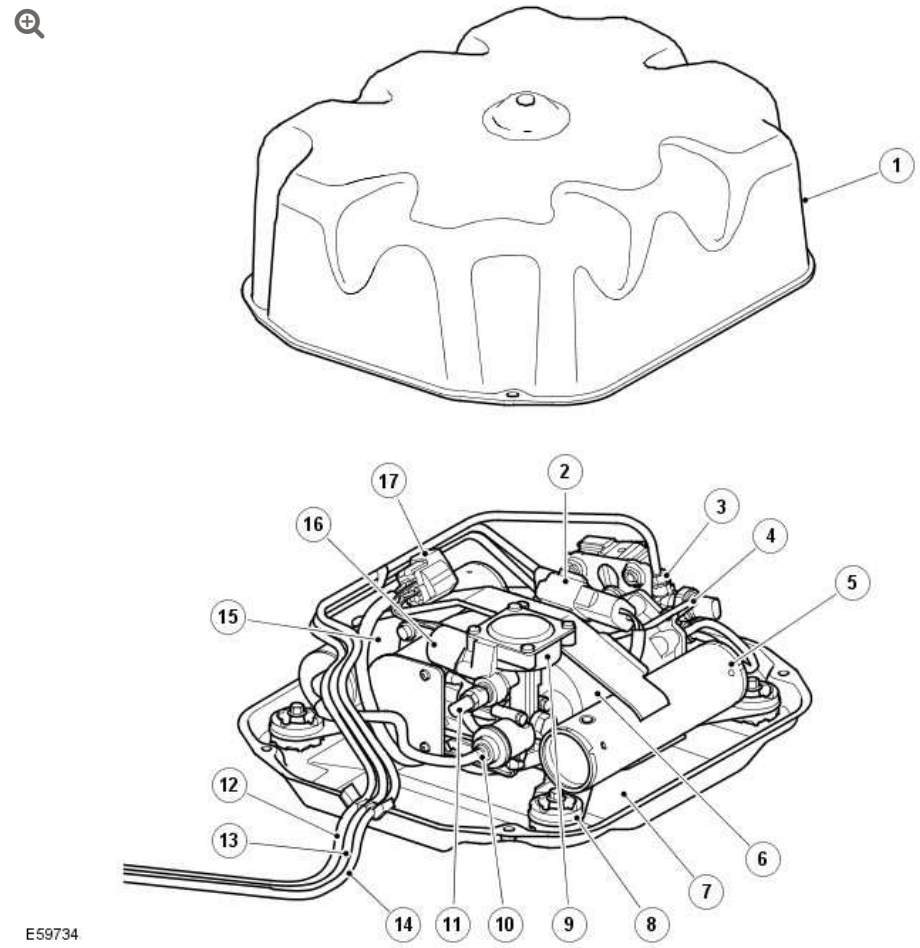

ITEM	DESCRIPTION
1	Cover
2	Motor electrical connector

ITEM	DESCRIPTION
3	Reservoir valve block
4	Pilot air pipe
5	Secondary silencer
6	Air dryer
7	Base plate
8	Rubber mount (4 off)
9	Exhaust valve
10	Intake pipe
11	Exhaust silencer
12	Air harness to front valve block
13	Air harness to reservoir
14	Air harness to rear valve block
15	Secondary silencer
16	Pilot exhaust valve
17	Solenoid and sensors electrical connector

The air supply unit fitted from 2006MY is an improved unit providing quieter operation. Two silencer units are incorporated into the unit assembly to reduce operating noise.

The air supply unit is located in a housing which is mounted in the spare wheel well and secured with four bolts into threaded inserts to the vehicle floorpan. The unit is isolated from the vehicle body via four rubber isolation mounts.

The reservoir valve block is also located within the housing on a separate bracket at the rear of the unit.

The unit is connected to the system via a single air pipe to the reservoir valve block. Three air pipes from the reservoir valve block

pass through an aperture in the unit housing and through a grommet in the wheel well. It is important to ensure that this grommet is not disturbed and correctly installed. Incorrect fitment will allow water to enter the wheel well leading to possible damage to and failure of the air supply unit.

The unit comprises a piston compressor, a 12V electric motor, a solenoid operated exhaust pilot valve, a pressure relief valve, an air dryer unit and two silencers.

The electric motor, compressor, air dryer and pressure limiting and exhaust valve are mounted on a frame which in turn is mounted on flexible rubber mountings to reduce operating noise. The unit is mounted on a pressed base plate which is located on the floor of the wheel well. The unit is protected by a pressed cover which is lined with an insulating foam further limiting the operating noise.

The air supply unit can be serviced in the event of component failure, but is limited to the following components; air dryer, pilot exhaust pipe and the rubber mounts. Removal of the air supply unit does not require the whole air suspension system to be depressurized. The front and rear valve blocks and the reservoir valve block are normally closed when de-energized, preventing air pressure in the air springs and the reservoir escaping when the unit is disconnected.

There are a number of conditions that will inhibit operation of the air supply unit. It is vitally important that these system inhibits are not confused with a system malfunction. A full list of air supply unit inhibits are given in the air suspension control module section in this chapter.

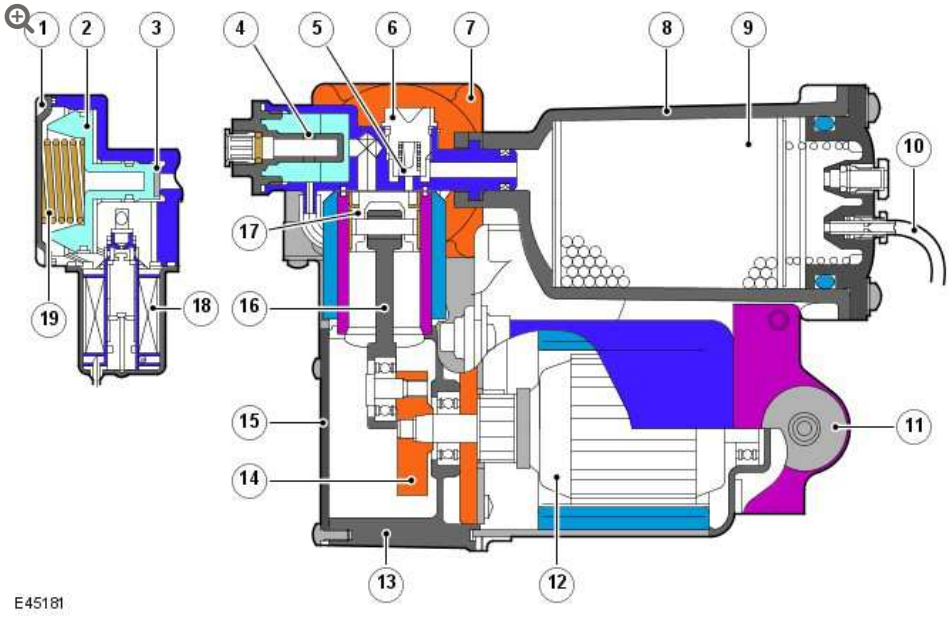

ITEM	DESCRIPTION
1	Exhaust valve cap
2	Plunger
3	Valve seat
4	Intake silencer port
5	Delivery valve
6	Valve guide
7	Cylinder head
8	Dryer case
9	Desiccant
10	Pilot air pipe
11	Isolation rubber mount (not fitted to Range Rover)
12	Motor assembly
13	Crankcase
14	Crank
15	Crankcase cover
16	Connecting rod

ITEM	DESCRIPTION
17	Piston
18	Pilot exhaust valve
19	Spring - slave valve (pressure relief)

Electric Motor

The electric motor is a 12V dc motor with a nominal operating voltage of 13.5V. The motor drives a crank which has an eccentric pin to which the compressor connecting rod is attached.

The motor is fitted with a temperature sensor on the brush Printed Circuit Board (PCB) assembly. The sensor is connected to the air suspension control module which monitors the motor temperature and can suspend motor operation if the operating thresholds are exceeded.

The following table shows the control module operating parameters for the differing air supply unit functions and the allowed motor operating temperatures.

Motor Operating Temperatures

	LEVELING	RESERVOIR FILLING
OFF	140°C (284°F)	130°C (266°C)
ON	120°C (248°F)	110°C (230°F)

The following graph shows motor temperature sensor resistance values against given temperatures.

NOTE:

This graph is also applicable for the compressor cylinder head temperature sensor.

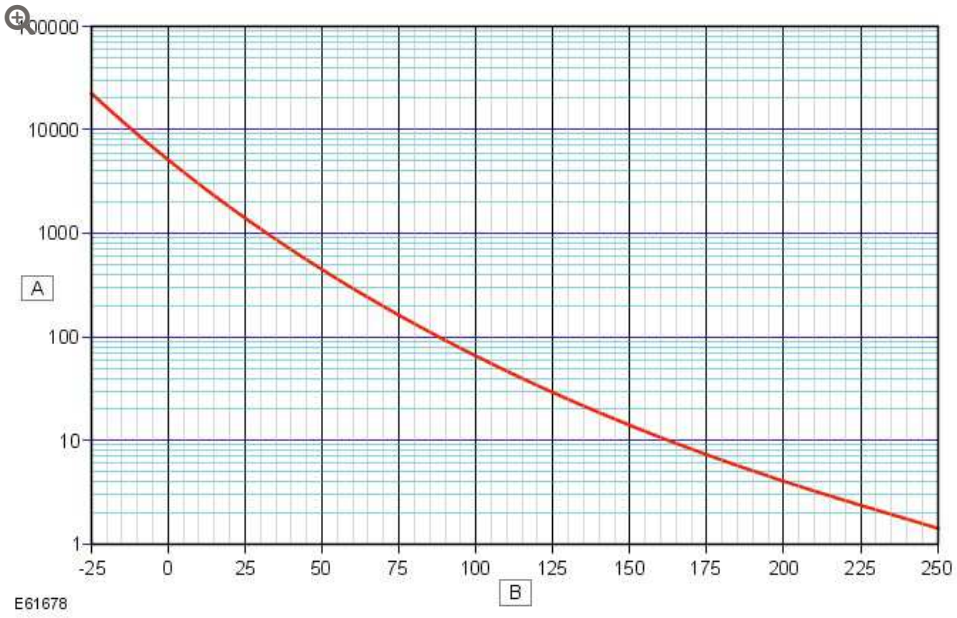

ITEM	DESCRIPTION
A	Resistance (kOhms)
B	Temperature (°C)

The following graph shows air suspension control module output voltages against motor temperature sensor temperatures.

NOTE:

This graph is also applicable for the compressor cylinder head temperature sensor.

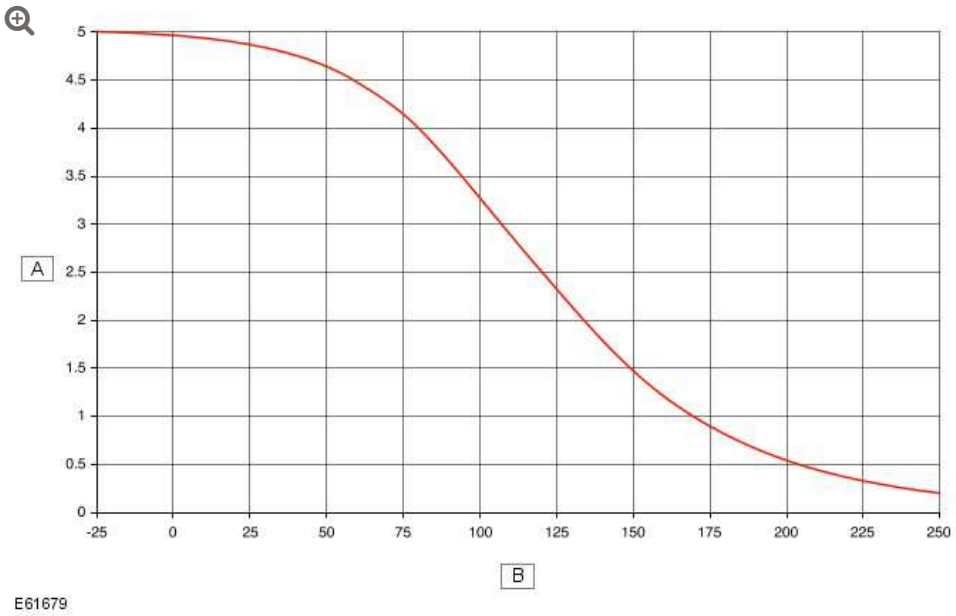

ITEM	DESCRIPTION
A	Control module input voltage (V)
B	Temperature sensor (°C)

Compressor

The compressor is used to supply air pressure to the air suspension reservoir. The air suspension control module monitors the pressure within the reservoir and, when the engine is running, maintains a pressure of 14.5 bar gage (210 lbf/in^2).

The compressor comprises a motor driven connecting rod and piston which operate in a cylinder with a separate cylinder head. The motor rotates the crank moving the piston up and down in the cylinder bore. The air in the cylinder is compressed with the up stroke and is passed via the delivery valve through the air dryer and into the system.

The cylinder head is fitted with a temperature sensor. The sensor is connected to the air suspension control module which monitors the cylinder temperature and can suspend motor and compressor operation if an overheat condition occurs.

The following table shows the control module operating parameters for the differing air supply unit functions and the allowed compressor cylinder head operating temperatures.

Compressor Cylinder Head Operating Temperatures

	LEVELING	RESERVOIR FILLING
OFF	140°C (284°F)	130°C (266°C)
ON	120°C (248°F)	110°C (230°F)

Refer to the motor temperature sensor graph for compressor cylinder head temperature sensor resistance values and the air suspension control module output voltage / temperature sensor graph.

Air Dryer

Attached to the compressor is the air dryer which contains a Desiccant for removing moisture from the compressed air. Pressurized air is passed through the air dryer which removes any moisture in the compressed air before it is passed into the reservoir and/or the system.

When the air springs are deflated, the exhaust air also passes through the air dryer, removing the moisture from the unit and regenerating the Desiccant.

The air dryer is an essential component in the system ensuring that only dry air is present in the system. If moist air is present, freezing can occur resulting in poor system operation or component malfunction or failure.

Pilot Exhaust Valve

Attached to the cylinder head is a solenoid operated exhaust pilot valve. This valve is opened when the air springs are to be deflated.

The pilot exhaust valve is connected to the air delivery gallery, downstream of the air dryer. The pilot valve, when opened, operates the compressor exhaust valve allowing the air springs to be deflated.

When the solenoid is energized, pilot air moves the exhaust valve plunger, allowing pressurized air from the air springs and/or the reservoir to pass through the air dryer to atmosphere.

Exhaust Valve

The exhaust valve operates when the pilot exhaust valve is opened, allowing air returning from the air springs and/or the reservoir to be exhausted quickly.

The pilot exhaust valve also provides the system pressure relief function which protects the air springs from over inflation. The valve is pneumatically operated, responding to air pressure applied to it to overcome pressure from its internal spring. The valve is connected into the main pressure gallery which is always subject to the system pressure available in either the air springs or the reservoir. The valve is controlled by a spring which restricts the maximum operating pressure to between 22 to 27 bar gage (319 to 391 lbf/in^2).

The minimum pressure in the system is also controlled by the exhaust valve to ensure that, even when deflated, the air springs contain a positive pressure with respect to atmosphere. This protects the air spring by ensuring it can still 'roll' over the piston without creasing.

Air Supply Unit Specifications

DESCRIPTION	VALUE
Working pressure	14.5 bar gage
Maximum pressure (stabilized)	22.0 to 27.0 bar gage
Operating voltage	10 to 16.5 Volts (13.5 Volts nominal)
Running current consumption	

DESCRIPTION	VALUE
	20-50 Amps depending on load
Maximum start-up current	120 Amps
Pilot Exhaust Valve - Solenoid valve resistance at 20°C (68°F)	4 Ohms ± 10%

NOTE:

Resistance values will vary with coil temperature. Resistance of test leads must be measured before any readings are taken. Resistance value of the test leads must be subtracted from final solenoid resistance value.

There are a number of conditions that will inhibit operation of the air suspension compressor. It is vitally important that these inhibits are not confused with a system malfunction. A full list of compressor inhibits is contained in the Air Suspension Control section.

RESERVOIR

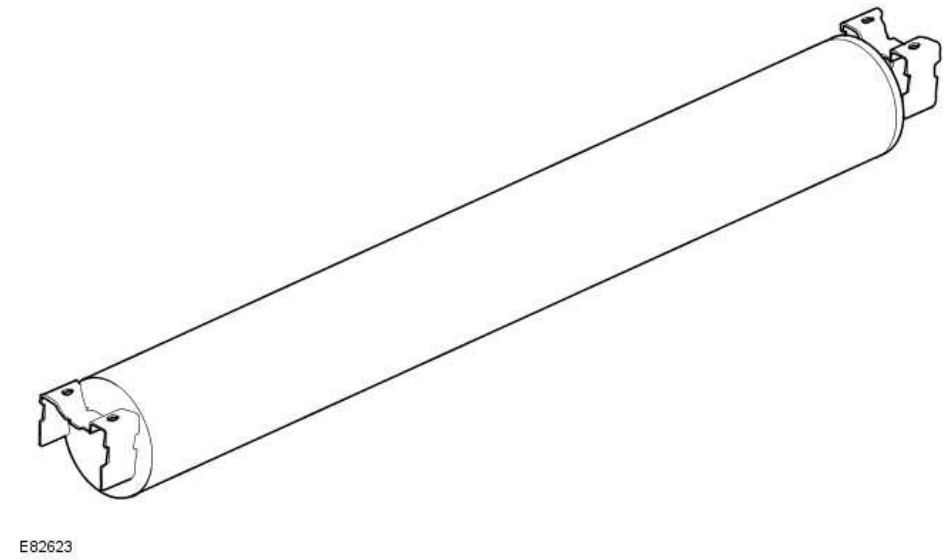

E82623

The reservoir is an air storage vessel which provides fast air suspension lift times by the immediate availability of pressurized air into the system.

The reservoir is located under the RH sill of the vehicle and is fabricated from steel and secured with four bolts to the underside of the vehicle.

The reservoir supplies pressurized air to the four air springs, via the valve blocks, to enable the air suspension system to carry out ride height changes.

The rearward end of the reservoir has a 'Voss' air fitting which provides for the connection of the air hose between the reservoir and the reservoir valve block. The reservoir has a capacity of 9.5 liters (580 in^3). The nominal working pressure of the reservoir is 14.5 bar gage (210 lbf/in^2), with a maximum pressure of 22 bar gage (319 lbf/in^2).

HEIGHT SENSORS

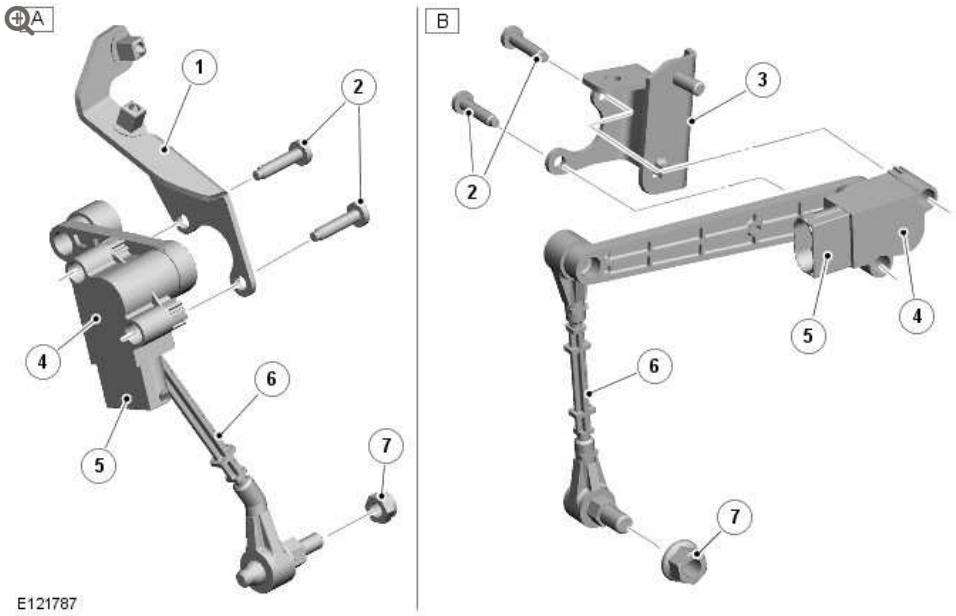

ITEM	DESCRIPTION
1	Bracket - front sensor
2	Screw

ITEM	DESCRIPTION
3	Bracket - rear sensor
4	Sensor
5	Electrical connector
6	Lever arm and drop link
7	Nut

A height sensor is fitted in each corner of the vehicle to monitor the ride height of the vehicle. The sensors are mounted on the front and rear subframes, with a mechanical link to the suspension lower arms. There are four different types of sensor fitted.

If a height sensor is removed from its mounting position for servicing or replacement, the Land Rover approved diagnostic system must be used to recalibrate the system. Calibration will also be required if the suspension arm to which the sensor is connected is removed or replaced or if a replacement drop link is fitted.

A calibration routine is performed using the Land Rover approved diagnostic system to read the position of each corner of the vehicle and record the settings in the control module memory. Once set, the calibration is not required to be performed unless the air suspension control module is removed or replaced, a height sensor is removed or replaced or a suspension arm to which the sensor is connected is removed or replaced. If the removed height sensor is subsequently refitted, the calibration procedure will have to be performed to ensure the integrity of the system.

The height sensors are attached to brackets on the subframes and are connected to the lower arms by links. The links allow articulation of the arm to allow for suspension travel. Each sensor is connected by a six pin multiplug.

The front and rear sensor drop links are serviceable items.

The four suspension height sensors that are used in the air suspension system also supply input to the adaptive dynamics system, two for the front suspension and two for the rear suspension. A front suspension height sensor is attached to each side of the front subframes and connected by a sensor arm and sensor link to the related lower lateral arm of the front suspension. A rear suspension height sensor is attached to each side of the rear subframe and connected by a sensor arm and sensor link to the related upper control arm of the rear suspension. On each suspension height sensor, the sensor arm and sensor link convert linear movement of the suspension into rotary movement of the sensor shaft.

The suspension height sensors measure suspension displacement at each corner of the vehicle and output a corresponding analogue signal to the air suspension module. The algorithms in the air suspension module calculate the position, velocity and frequency content of the signals and use the results for wheel control.

The sensors can be checked by applying 5V across the positive and negative terminals and measuring output signal which should be a nominal 57mV ± 3% per degree of sensor arm movement.

The following graph shows the vehicle height displacement from normal against output voltage for the front height sensors. The center line represents the "nominal" condition but depending on tolerances, the actual line may lie anywhere between the upper and lower lines.

Front Height Sensor

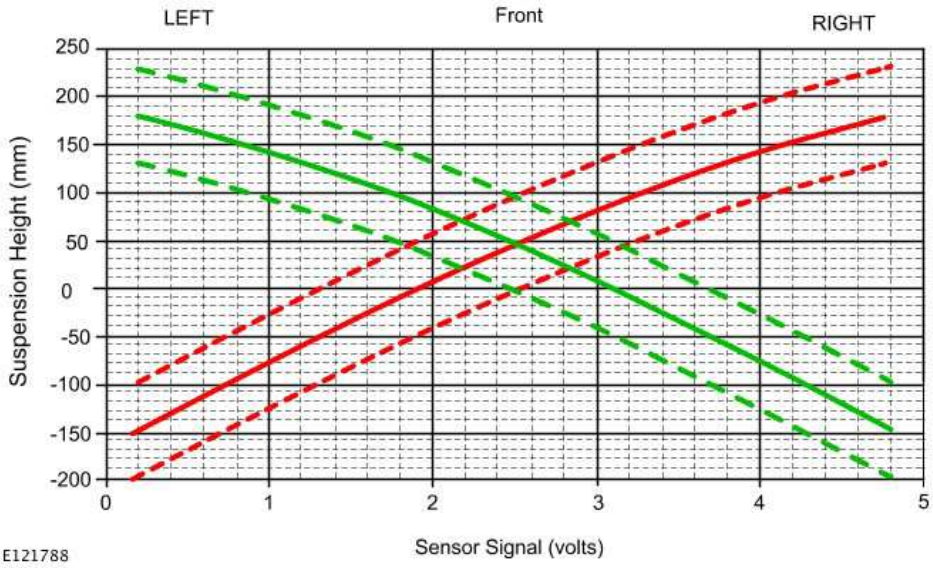

The following graph shows the vehicle height displacement from normal against output voltage for the rear height sensors. The center line represents the "nominal" condition but depending on tolerances, the actual line may lie anywhere between the upper and lower lines.

Rear Height Sensor

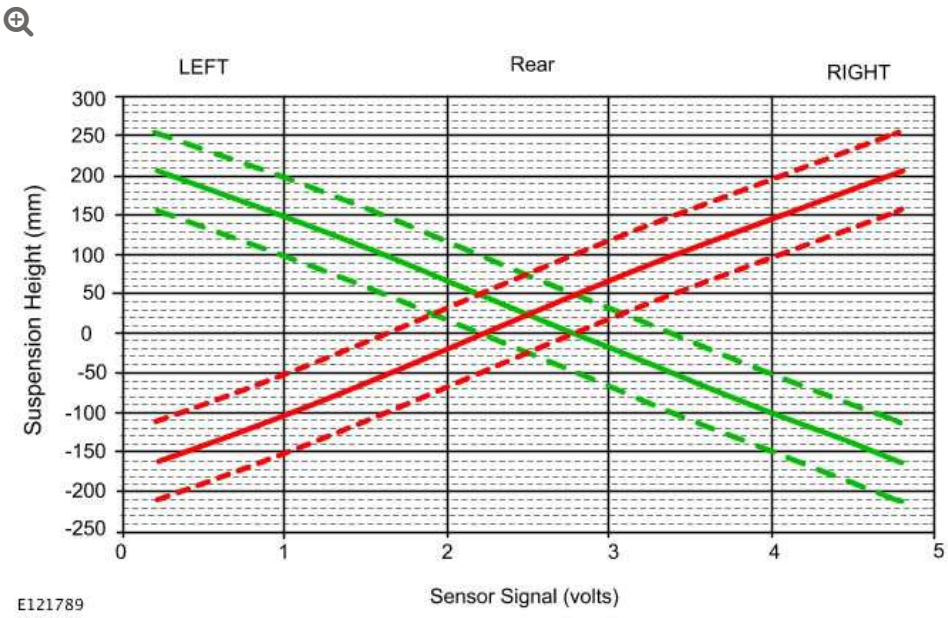

AIR SPRINGS

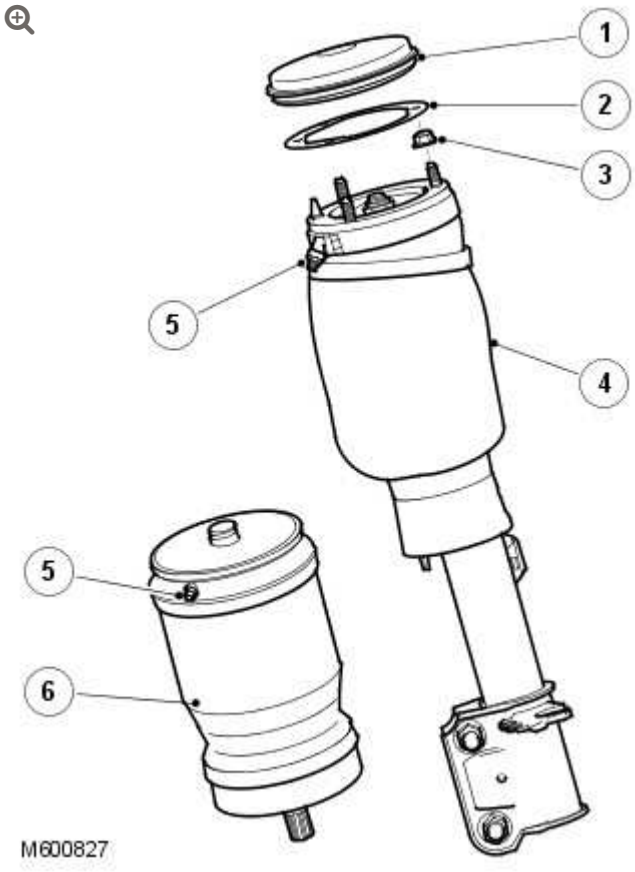

ITEM	DESCRIPTION
1	Cover
2	Seal plate
3	Nut
4	Front air spring
5	Air hose connector
6	Rear air spring

The air springs on the front and rear suspension are similar in construction. The air springs are manufactured from a flexible rubber and each air spring forms an air tight cavity which provides the required spring rate for each corner of the vehicle.

As the air spring is compressed, the rubber material compresses and rolls down the side of the vertical housing (piston) below the spring.

An air connection port is located on the top of each spring and allows air to be added or removed from each spring. The port is connected via a Voss connector and a plastic tube to the axle valve block.

Replacement of an individual air spring does not require a full depressurization of the air suspension system. Only the corner concerned need be depressurized. This is achieved using a routine in the Land Rover approved diagnostic system.

When servicing of an air spring or a full system depressurization is required, the weight of the vehicle must be supported before the system is depressurized. On reassembly, the air spring must be fully pressurized before the weight of the vehicle is applied to it.

AIR HARNESS

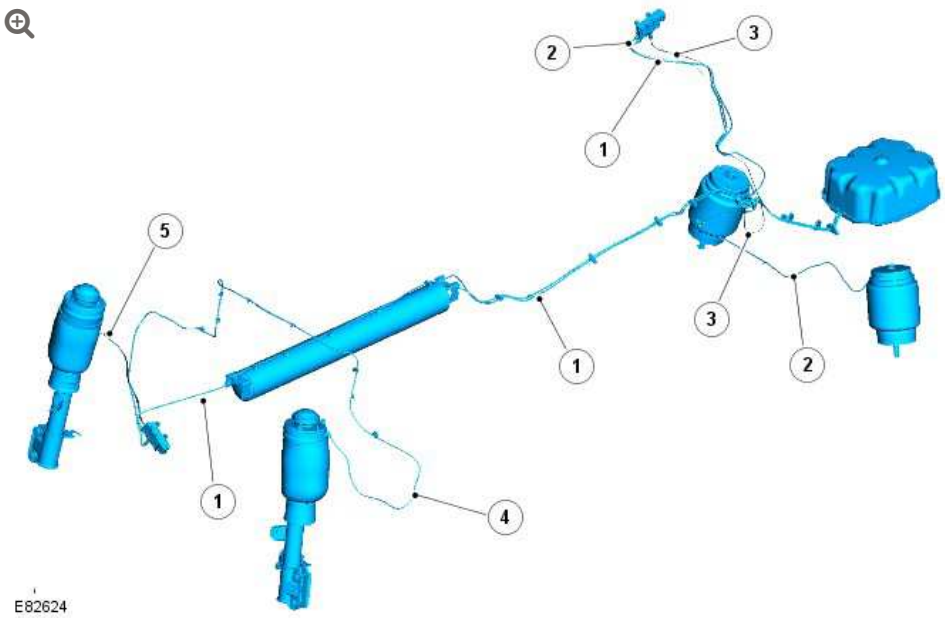

ITEM	DESCRIPTION
1	Pipe - Main harness
2	Pipe - Rear valve block to rear left hand air spring
3	Pipe - Rear valve block to rear right hand spring

ITEM	DESCRIPTION
4	Pipe - Front valve block to front left hand air spring
5	Pipe - Front valve block to front right hand air spring

The system is interconnected via 6 mm diameter blue, yellow and black colored nylon pipes. The yellow pipes denote the right hand side and the black pipes denote the left hand side. Blue colored pipes are used to show the pipes which connect the front and rear valve blocks to the reservoir valve.

The air harness comprises a main harness which is located along the full length of the vehicle and connects the reservoir valve block to the front and rear valve blocks and the reservoir and four separate harnesses which are used to connect each valve block to the air springs.

The pipes are attached to the subframes and vehicle body with clips. To ensure that the correct routing is maintained, the pipes have timing marks which align with various clip positions. The timing marks are in the form of a white band around the pipe, indicating the clip position. If the correct routing is not achieved, unnecessary tension at the pipe joints will occur resulting in possible early failure.

If a pipe becomes damaged, an in-line connector is available for repair purposes. The pipes are secured to the body and the chassis with a number of plastic clips.

LEAK DETECTION

Leak detection can be carried out using a Land Rover approved leak detection spray.

If the vehicle appears to be leaking, perform a leak check on all aspects of the system, i.e.; air spring hose fittings and the associated connections on the valve blocks, air springs and reservoir. Failure to

correctly diagnose leakage will result in unnecessary exchange of serviceable components and recurrence of original problem.

AIR SUSPENSION CONTROL MODULE

The air suspension system fitted to Range Rover is controlled by the air suspension control module which is located in the RH rear quarter panel.

The control module monitors the height of each corner of the vehicle via four height sensors, which are mounted in-board of each road wheel.

The control module has the following modes of operation:

- Calibration
- Normal
- Periodic Wake-Up.

When a new air suspension control module is fitted, the air suspension system will not function until the air suspension software is loaded and the system calibrated using the Land Rover approved diagnostic system.

CALIBRATION

A calibration routine is performed using the Land Rover approved diagnostic system to access the position of each corner of the vehicle and record the settings in the control module memory. Once set, the calibration is not required to be performed unless the air suspension control module is removed or replaced, a height sensor or bracket is removed, replaced or disturbed or a suspension arm to which the sensor is connected is removed or replaced. If the removed height sensor is subsequently refitted, the calibration procedure will have to be performed to ensure the integrity of the system.

If the air supply unit, the reservoir, a valve block, a damper module or the air harness is removed or replaced, the system will not require recalibration.

PERIODIC WAKE-UP MODE

When the vehicle is parked, the air suspension control module 'wakes up' two hours after the ignition was last switched off and once every twenty four hours thereafter. The vehicle height is checked and if the vehicle is not level within a pre-set tolerance, small downwards height adjustments may be made automatically.

SYSTEM OPERATION

Under normal operating conditions, the air suspension control module keeps the vehicle level at the 'current' ride height. The incoming height signals from the sensors are passed through filters to remove irregular signals produced by road noise or other irregularities. When the vehicle is stationary or a height change is in progress, the signals are passed through a 'fast' filter, which tracks the true rate of change of height. When the vehicle is moving, the signals are passed through a 'slow' filter. The 'slow' filtered signals remove almost all road noise from the signals and output a true long term average for each corner height. The 'slow' filtered signals cannot be used to respond quickly during height changes.

The air suspension control module monitors each corner height signal using the fast filtered signals if the vehicle is stationary or the slow filtered signals if the vehicle is moving. If the height remains in a 'dead band' which is ±10 mm from the target height, the control module does not implement any height adjustment changes. When the control module detects that a corner has moved outside of the 'dead band', the control module operates the compressor and/or the valves to raise or lower the corresponding corner(s) back into the target height.

SYSTEM INHIBITS

A number of conditions exist where a change in ride height is undesirable. To counter this, the air suspension control module is programmed with a number of system inhibits. If any of the conditions detailed below exist, the air suspension control module will suspend height changes and height corrections.

COMPRESSOR

Compressor Temperature

Two temperature sensors are located within the compressor to prevent overheating. If the temperature of the motor brush assembly or the compressor cylinder head rise above pre-set limits, the air suspension control module will inhibit the compressor operation. The limits are detailed in tables in the Air Supply Unit section of this manual.

CORNERING

If the air suspension control module registers a cornering force greater than 0.2g it will inhibit all height changes and corrections. The system will remain inhibited until the cornering force falls to less than 0.15g. The air suspension control module receives a message from the lateral acceleration sensor (which is an integral part of the anti-lock brake system (ABS) yaw rate sensor) on the high speed controller area network (CAN) bus for the cornering force.

RAPID ACCELERATION

If the air suspension control module registers a rapid acceleration greater than 0.2g it will inhibit all height changes and corrections. The system will remain inhibited until the rapid acceleration falls to less than 0.15g. Acceleration is calculated by the control module from a vehicle speed signal received via the high speed CAN bus.

RAPID DECELERATION

If the air suspension control module registers a rapid deceleration smaller than - 0.2g it will inhibit all height changes and corrections. The system will remain inhibited until the rapid deceleration rises above - 0.15g. Deceleration is calculated by the control module from a vehicle speed signal received via the high speed CAN bus.

VEHICLE JACK

The air suspension control module will inhibit all height changes and corrections if it detects a corner lowering too slowly for more than 1.2 seconds. This is interpreted as the corner identified as moving too slowly being supported on a jack. In this situation, the corner height will not change when air is released from the air spring because the jack acts as a mechanical prop.

The system will remain inhibited until any of the following conditions exist:

- The air suspension rotary switch is moved to the up or down position
- The vehicle speed rises to more than 2 mph (3 km/h) for more than 45 seconds.

DOOR OPEN

The air suspension control module will stop all height change requests while any of the doors are open. Vehicle leveling continues with a door open by keeping the vehicle at the height when the door was opened if the vehicle load changes. Door open status is ignored when the vehicle speed is above 5 km/h.

DIAGNOSTICS

The air suspension control module can store fault codes which can be retrieved using the Land Rover approved diagnostic system. The diagnostics information is obtained via the diagnostic socket which is

located below the instrument panel, above the drivers foot pedals. The socket is protected by a hinged cover.

The diagnostic socket allows the exchange of information between the various control modules on the bus systems and the Land Rover approved diagnostic system. This allows the fast retrieval of diagnostic information and programming of certain functions using the Land Rover approved diagnostic system.

FAULT MESSAGES

The air suspension has two methods which it can use to inform the driver of a fault in the air suspension system; the air suspension control switch LED's and the instrument cluster message center.

If the air suspension control module suffers a major failure and there is no air suspension control, all the control switch LED's will remain unlit.

If a fault occurs and the control module can determine the ride height and the vehicle is not above on-road height, the driver will be notified via a message in the message center. If the control module cannot determine the height of the vehicle, or the vehicle is above on-road height and cannot be lowered, a message is displayed and accompanied with a maximum speed message.

For additional information, refer to: Information and Message Center (413-08, Description and Operation).

RESERVOIR

The reservoir supplies pressurized air to the four air springs, via the reservoir valve block, to enable the air suspension system to raise the vehicle more quickly.

The air suspension control module assumes the reservoir has sufficient pressure, which is measured before a vehicle raise is

started. The control module then uses a software model to operate the compressor as required.

SYSTEM PNEUMATIC CIRCUIT

The following schematic diagram shows the connection relationship between the air supply unit, the reservoir, the reservoir valve block, the cross-link valves and the air springs.

System Schematic Circuit Diagram

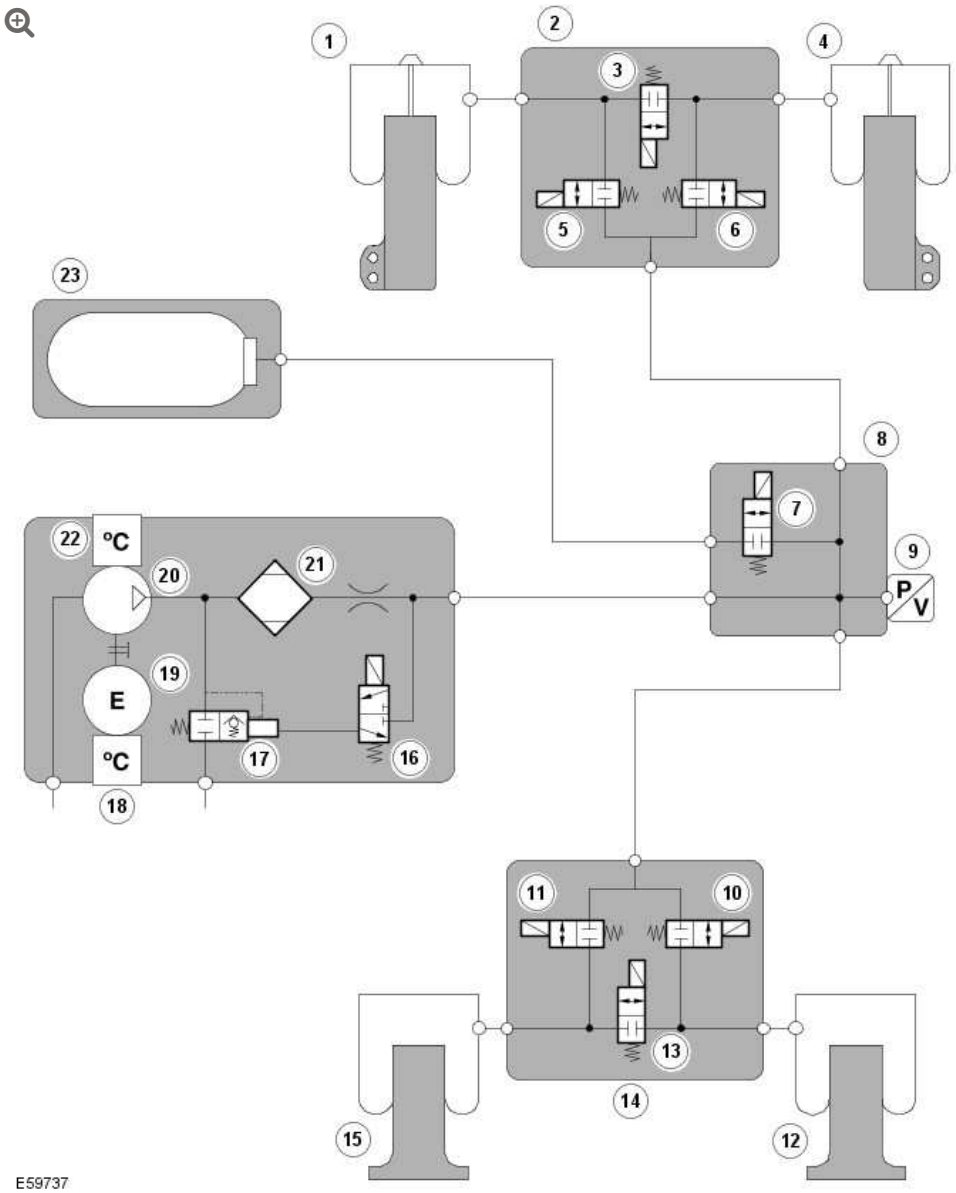

ITEM	DESCRIPTION

ITEM	DESCRIPTION
1	Front left hand air spring
2	Front valve block
3	Cross link valve
4	Front right hand air spring
5	Front left hand corner valve
6	Front right hand corner valve
7	Reservoir valve
8	Reservoir valve block
9	Pressure sensor
10	Rear right hand corner valve
11	Rear left hand corner valve
12	Rear right hand air spring
13	Cross link valve
14	Rear valve block
15	Rear left hand air spring
16	Pilot exhaust valve
17	Pressure relief and exhaust valve
18	Motor temperature sensor
19	Electric motor
20	Compressor
21	Air dryer
22	Compressor temperature sensor
23	Reservoir

AIR SUSPENSION CONTROL DIAGRAM

NOTE:

A = Hardwired; **D** = High speed CAN bus

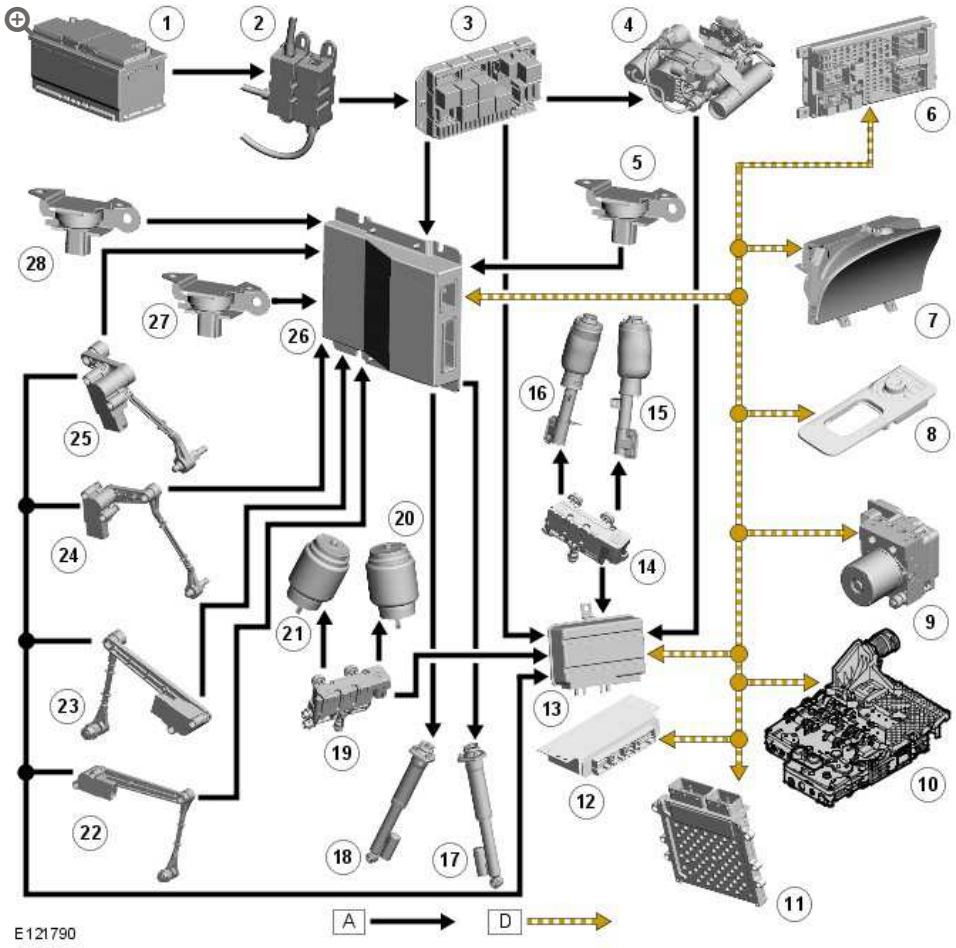

ITEM	DESCRIPTION
1	Battery
2	Battery Junction Box 2
3	Rear Fuse Box
4	Compressor
5	Accelerometer
6	Central Junction Box
7	Instrument Cluster
8	Terrain Response Selector/Air Suspension Control Switch

ITEM	DESCRIPTION
9	ABS (anti-lock brake system) Module
10	Automatic Transmission Control Module
11	ECM (engine control module)
12	Rear Differential Control Module
13	Air Suspension Control Module
14	Front Cross Link Valve
15	RH Front Spring and Shock Absorber Assembly
16	LH Front Spring and Shock Absorber Assembly
17	RH Rear Shock Absorber Assembly
18	LH Rear Shock Absorber Assembly
19	Rear Cross Link Valve
20	RH Rear Air Spring
21	LH Rear Air Spring
22	Height Sensor
23	Height Sensor
24	Height Sensor
25	Height Sensor
26	Active Damping Module
27	Accelerometer
28	Accelerometer

2012.0 RANGE ROVER (LM), 204-05

VEHICLE DYNAMIC SUSPENSION

DIAGNOSIS AND TESTING

PRINCIPLES OF OPERATION

For additional information on the operation of the Air Suspension system, refer to the relevant section of the workshop manual.

INSPECTION AND VERIFICATION

CAUTION:

Diagnosis by substitution from a donor vehicle is NOT acceptable. Substitution of control modules does not guarantee confirmation of a fault, and may also cause additional faults in the vehicle being tested and/or the donor vehicle.

1. Verify the customer concern.
2. Confirm which, if any, warning lights and/or messages were displayed on the instrument cluster. For a list of messages, refer to the relevant section of the workshop manual.
3. Visually inspect for obvious mechanical or electrical faults.

Visual Inspection

MECHANICAL	ELECTRICAL
▪ Air leakage ▪ Air springs ▪ Reservoir ▪ Compressor ▪ Compressor air filter ▪ Pipework and unions ▪ Sensor installation ▪ Valve block(s)	▪ Battery ▪ Fuse(s) ▪ Wiring harness physical damage or water ingress ▪ Loose or corroded electrical connectors ▪ Air suspension control switch ▪ Controller area network (CAN) circuits ▪ Sensors ▪ Valve block(s) ▪ Air suspension control module

4. If an obvious cause for an observed or reported concern is found, correct the cause (if possible) before proceeding to the next step.

5. Use the approved diagnostic system or a scan tool to retrieve any diagnostic trouble codes (DTCs) before moving onto the symptom chart or DTC index.
    - Make sure that all DTCs are cleared following rectification.

SYMPTOM CHART

SYMPTOM	POSSIBLE MESSAGE	POSSIBLE CAUSES	ACTION
System detects extended mode unnecessarily when lowering	▪ -	▪ Crossed gallery and air spring pipes ▪ Incorrect valve block installed to front or rear	Where possible, refer to the guided diagnostic routine on the approved diagnostic system.

SYMPTOM	POSSIBLE MESSAGE	POSSIBLE CAUSES	ACTION
		▪ Damage or blockage in air harness ▪ Faulty height sensor	
Vehicle leans/tilts after being left over-night or for some days	▪ -	▪ Leaking air spring(s) ▪ Leak from corner valve to gallery ▪ Exhaust valve stuck open	Where possible, refer to the guided diagnostic routine on the approved diagnostic system.
After vehicle left over-night or for some days system regularly indicates "Suspension vehicle raising slowly" when first driving off	▪ Suspension vehicle raising slowly	▪ Leaking air spring(s) ▪ Leaking reservoir	Where possible, refer to the guided diagnostic routine on the approved diagnostic system.
Changes between different ride-heights are not smooth	▪ -	▪ Faulty height sensor	Where possible, refer to the guided diagnostic routine on the approved diagnostic system.

DTC INDEX

For a list of Diagnostic Trouble Codes (DTCs) that could be logged on this vehicle, please refer to Section 100-00. REFER to: (100-00)

Diagnostic Trouble Code (DTC) Index - DTC: Module Name: Adaptive Damping Control Module (Description and Operation),

Diagnostic Trouble Code (DTC) Index - DTC: Module Name: Air Suspension Control Module (Description and Operation).

AIR SUSPENSION AIR FILTER (G426769)

REMOVAL AND INSTALLATION

REMOVAL

1. Open the liftgate and tailgate.

2. Remove the spare wheel and tire.

3. 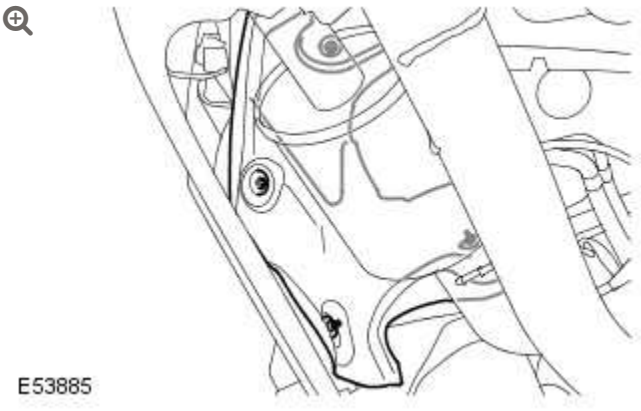

   Remove the 4 nuts securing the LH rear tail pipe heat shield.

4. Reposition the LH rear tail pipe heat shield.

5. Disconnect the air suspension intake filter pipe.

6. 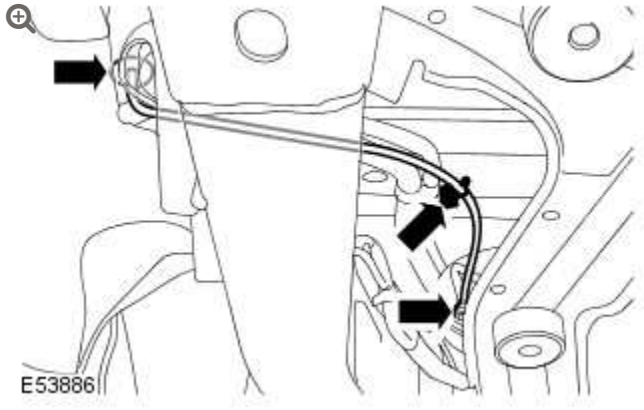

Detach the air suspension intake filter.

- Release the grommet.
- Release from the clip.

7. 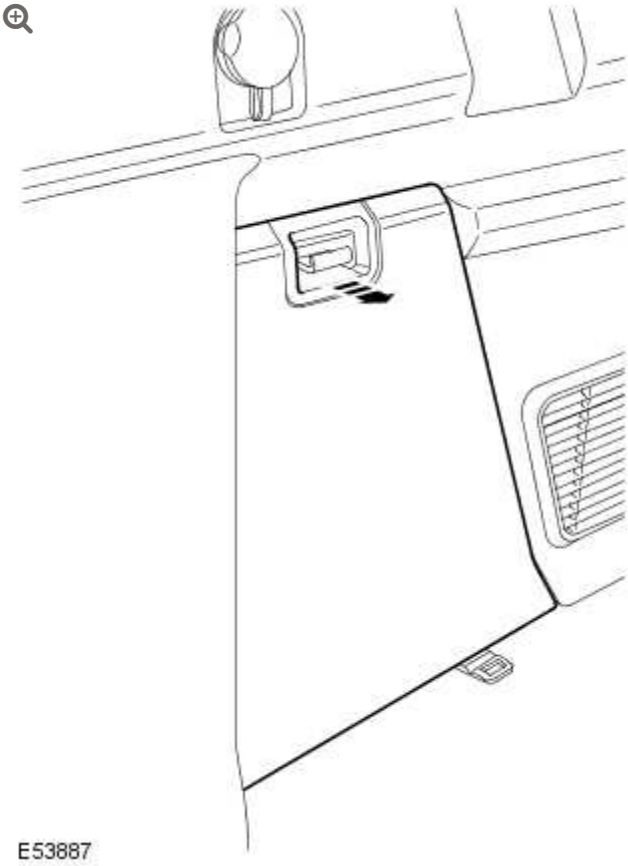

Remove the LH lower rear quarter trim access panel.

8.

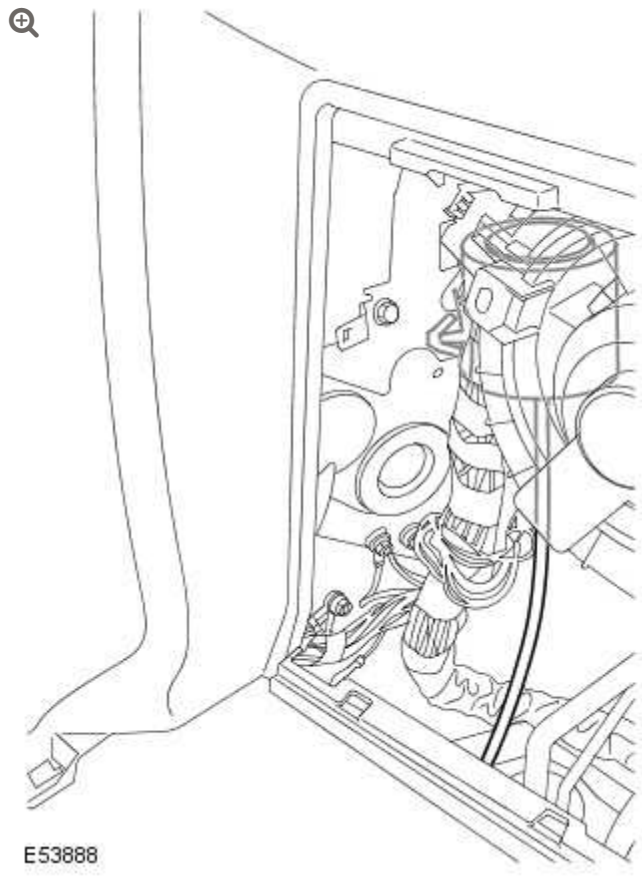

Remove the air suspension intake filter.

INSTALLATION

1. Install the air suspension intake filter.
   - Install the grommet.
2. Install the LH lower rear quarter trim access panel.
3. Attach the air suspension intake filter.
4. Connect the air suspension intake filter.
5. Reposition the LH rear tail pipe heat shield.
   - Install the nuts.

6. Install the spare wheel and tire.

7. Close the liftgate and tailgate.

VEHICLE DYNAMIC SUSPENSION

AIR SUSPENSION COMPRESSOR (G1234884)

REMOVAL AND INSTALLATION

60.50.10	COMPRESSOR - RENEW	5000 CC, AJ V8	0.8	USED WITHINS	+

REMOVAL

CAUTION:

If a new air suspension compressor, air compressor drier or air compressor delivery valve kit is installed due to failure, an air compressor relay must be installed. Failure to follow this instruction may result in damage to the air suspension system components.

NOTES:

- Removal steps in this procedure may contain installation details.
- Lower the suspension ride height to access level, using the ride height control switches.

1. Disconnect the battery ground cable.
   For additional information, refer to: Specifications (414-00 Charging System - General Information, Specifications).

2. For additional information, refer to: Air Suspension System Depressurize and Pressurize (204-05 Vehicle Dynamic Suspension, General Procedures).

3. 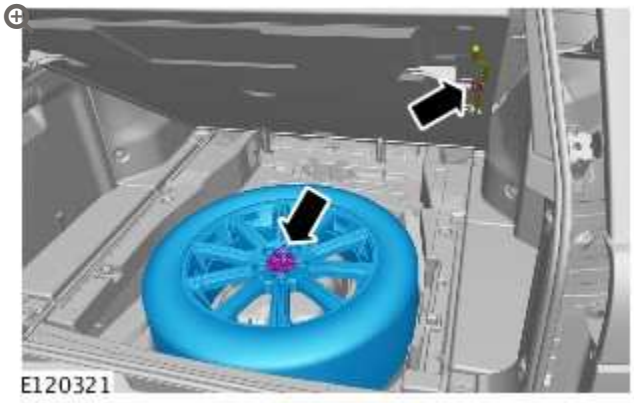

   Remove the spare wheel and tire.

4.

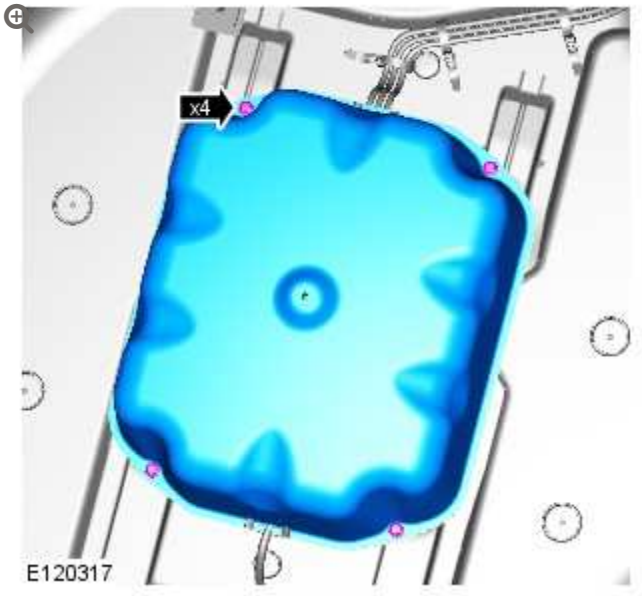

- TORQUE: 10 Nm

5. **CAUTION:**

Before disconnecting or removing the components, ensure the area around the joint faces and connections are clean and dry. Plug open connections to prevent contamination.

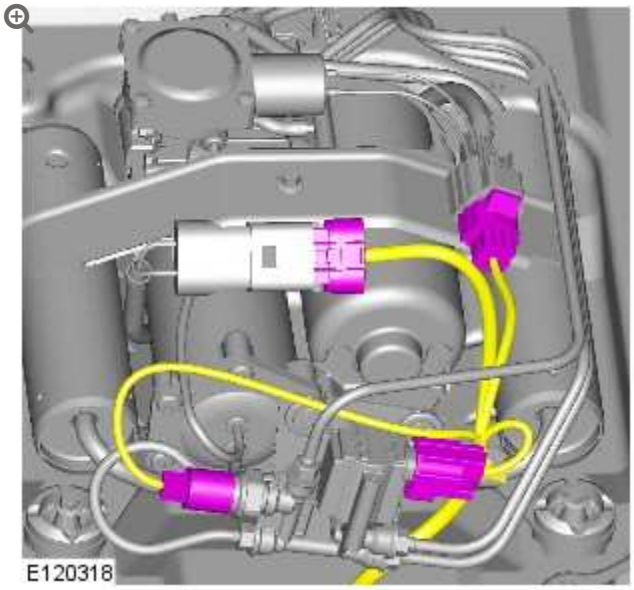

6.

CAUTIONS:

- Before disconnecting or removing the components, ensure the area around the joint faces and connections are clean and dry. Plug open connections to prevent contamination.
- Visually inspect the air line ends for damage or wear. Replace the air line as necessary.

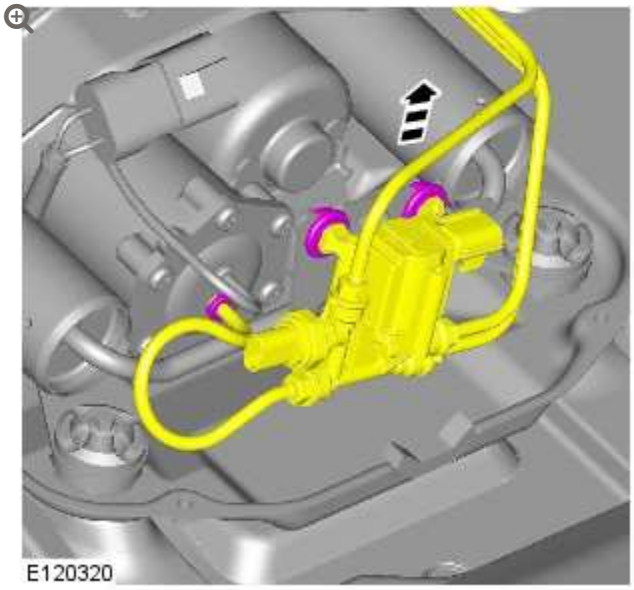

7.

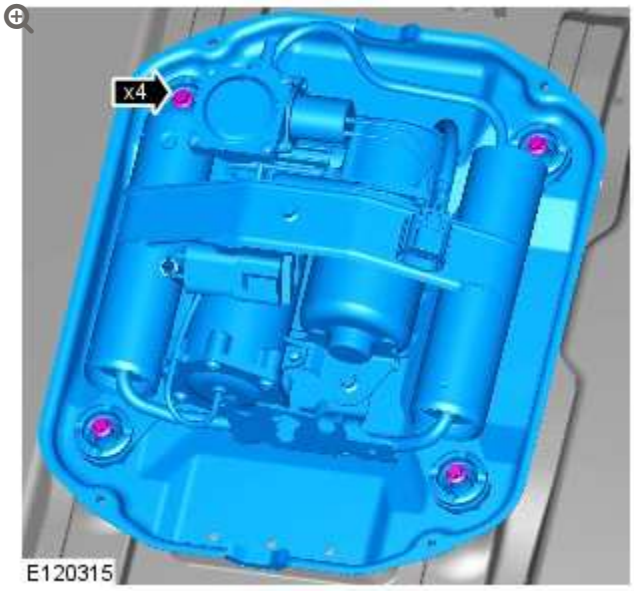

- TORQUE: 10 Nm

8. **NOTES:**

- Do not disassemble further if the component is removed for access only.
- Note the fitted position of the washers.

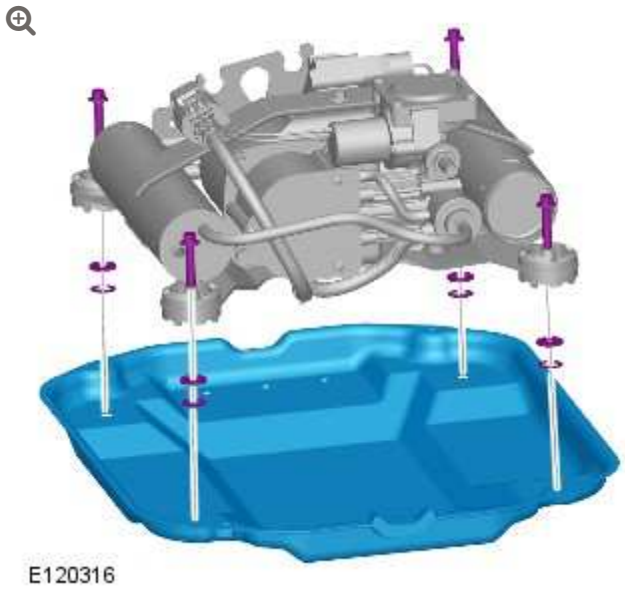

9.

CAUTION:

Visually inspect the air line ends for damage or wear. Replace the air line as necessary.

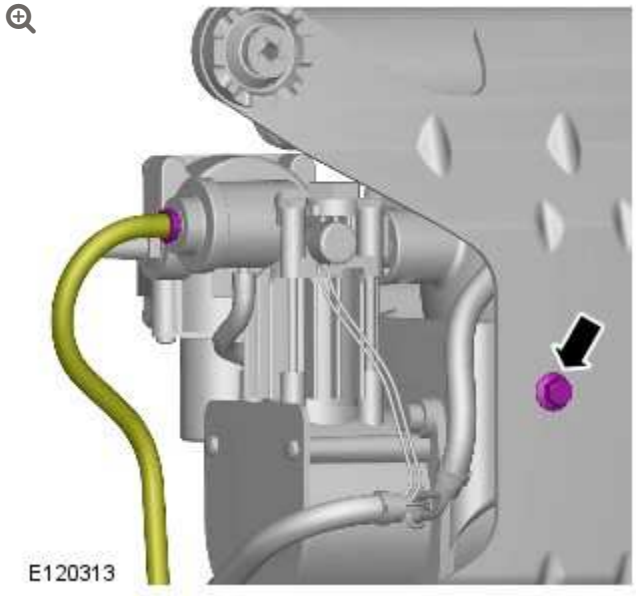

- TORQUE: 10 Nm

10.

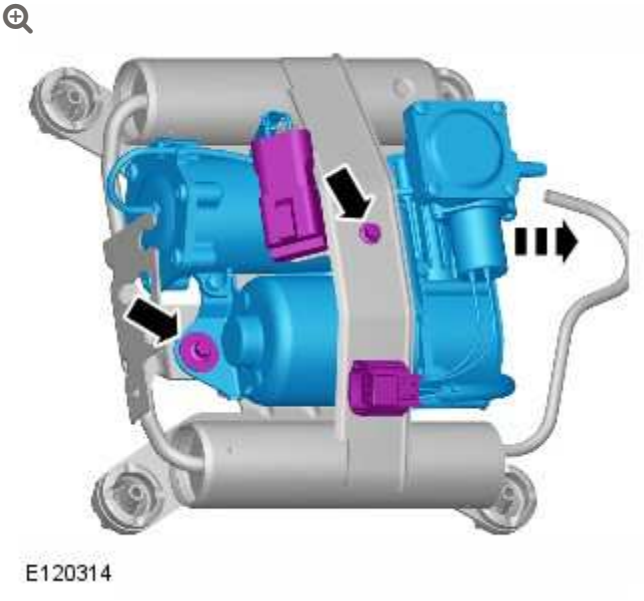

Remove the air suspension compressor.

- TORQUE: 10 Nm

INSTALLATION

1. To install, reverse the removal procedure.

AIR SUSPENSION COMPRESSOR DRIER (G1234885)

REMOVAL AND INSTALLATION

60.50.09	AIR DRYER - RENEW	5000 CC, AJ V8	0.8	USED WITHINS	+

REMOVAL

CAUTION:

If a new air suspension compressor, air compressor drier or air compressor delivery valve kit is installed due to failure, an air compressor relay must be installed. Failure to follow this instruction may result in damage to the air suspension system components.

NOTE:

Removal steps in this procedure may contain installation details.

1. Disconnect the battery ground cable.
   For additional information, refer to: Specifications (414-00 Charging System - General Information, Specifications).

2. Remove the air suspension compressor.
   For additional information, refer to: Air Suspension Compressor (204-05 Vehicle Dynamic Suspension, Removal and Installation).

3. **CAUTIONS:**

   - Before disconnecting or removing the components, ensure the area around the joint faces and connections are clean and dry. Plug open connections to prevent contamination.
   - Visually inspect the air line ends for damage or wear. Replace the air line as necessary.

   NOTE:

   Remove and discard the O-ring seal.

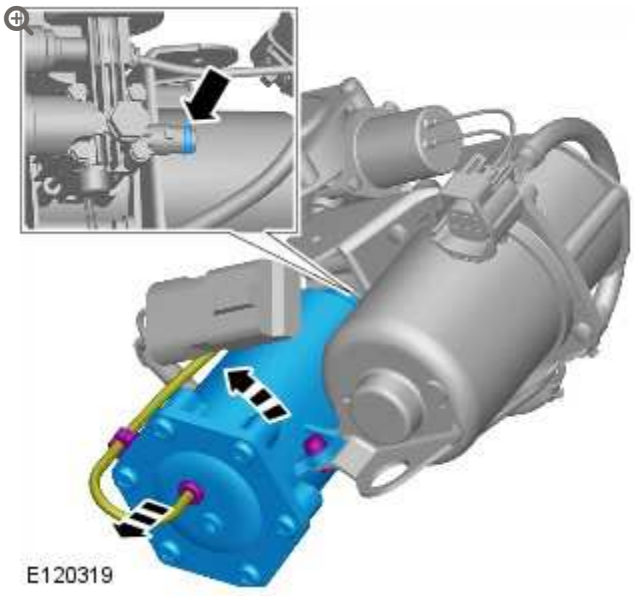

- TORQUE: 3 NmLubricate the O-ring with a lithium based grease.

INSTALLATION

1. To install, reverse the removal procedure.

VEHICLE DYNAMIC SUSPENSION

AIR SUSPENSION CONTROL MODULE (G1226133)

REMOVAL AND INSTALLATION

60.50.04	ELECTRONIC CONTROL UNIT - RENEW	5000 CC, AJ V8	0.2	USED WITHINS	+
60.50.04	ELECTRONIC CONTROL UNIT - RENEW	ALL DERIVATIVES	0.6	USED WITHINS	+

REMOVAL

NOTE:

Removal steps in this procedure may contain installation details.

1. Disconnect the battery ground cable.
   For additional information, refer to: Specifications (414-00, Specifications).

2.

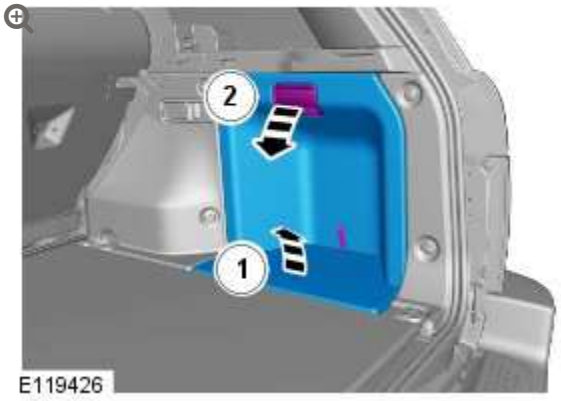

3.

CAUTION:

Take extra care not to damage the wiring harnesses.

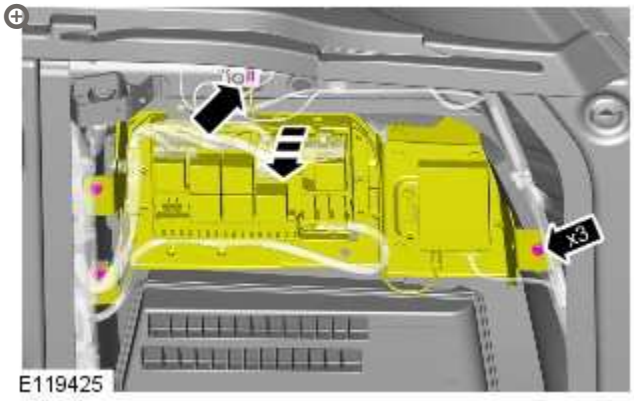

- TORQUE: 8 Nm

4.

CAUTION:

Before disconnecting or removing the components, make sure the area around the joint faces and connections are clean.

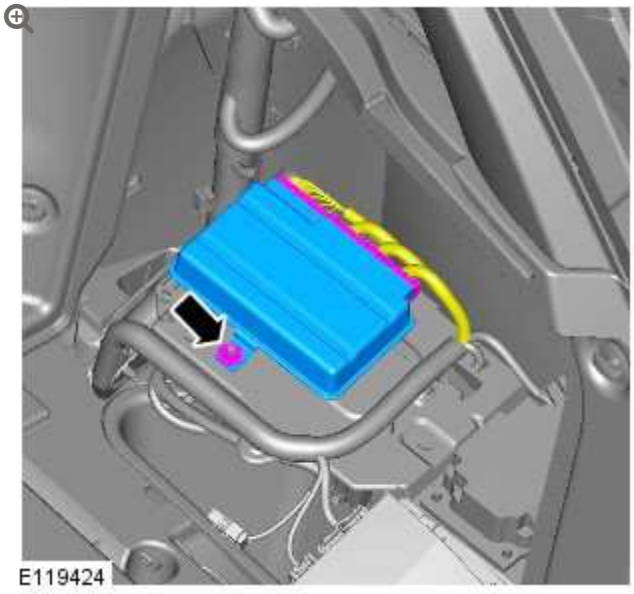

- TORQUE: 9 Nm

INSTALLATION

1. To install, reverse the removal procedure.

2. **CAUTION:**

   Calibration of the air suspension system must be carried out after the following components have been replaced: air suspension control module, suspension height sensor, suspension components and body panels incorporating suspension fixing points.

   Configure the air suspension control module using the diagnostic tool.

VEHICLE DYNAMIC SUSPENSION

AIR SUSPENSION FRONT SOLENOID VALVE BLOCK

(G939467)

REMOVAL AND INSTALLATION

60.50.11	VALVE BLOCK ASSEMBLY - RENEW	ALL DERIVATIVES	1	USED WITHINS	+

REMOVAL

1. Disconnect the battery ground cable.
   For additional information, refer to: Specifications (414-00 Charging System - General Information, Specifications).

2. **WARNING:**

   Do not work on or under a vehicle supported only by a jack. Always support the vehicle on safety stands.

   Raise and support the vehicle.

3. Remove the front RH fender splash shield.
   For additional information, refer to: Fender Splash Shield (501-02 Front End Body Panels, Removal and Installation).

4. Using T4, depressurize the air suspension.
   For additional information, refer to: Air Suspension System Depressurize and Pressurize (204-05 Vehicle Dynamic Suspension, General Procedures).

5. **CAUTION:**

   Before the disconnection or removal of any components, ensure the area around joint faces and connections are clean. Plug any open connections to prevent contamination.

   NOTE:

   Note the air line fitted positions.

   Disconnect the 3 air lines from the air suspension front solenoid valve block.

6. Remove the air suspension front solenoid valve block.
   - Disconnect the electrical connector.
   - Release the 3 valve block rubber insulators.

7.

CAUTIONS:

- Break the voss collet to remove, attempting to slide the collet from the air line will result in damage.
- Visually inspect the air line ends for damage or wear. Repair or replace the air line as necessary.

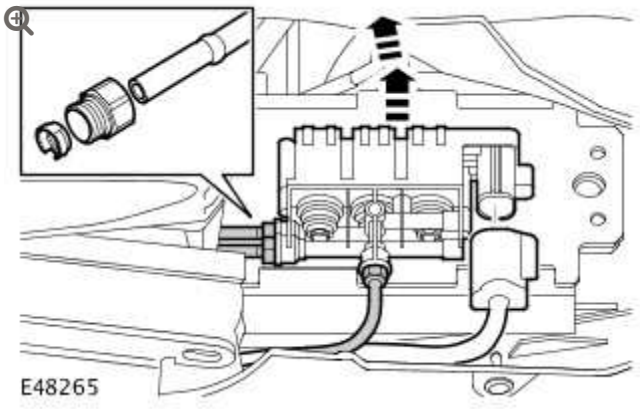

Remove the Voss connectors from the air lines.

- Remove and discard the collet and the union.

INSTALLATION

1.

CAUTION:

Make sure the new Voss connector is installed and fully tightened with the alignment plug installed.

NOTE:

New air suspension components are supplied with new Voss connectors tightened to the correct torque. Do not install new voss connectors if a new component is being installed.

Install new Voss connectors to the air suspension front solenoid valve block.

- Tighten to 2.5 Nm (1.7 lb.ft).

2. Install the air suspension front solenoid valve block.
   - Secure the 3 valve block rubber insulators.
   - Connect the air lines into the Voss connector.
   - Pull on each air line to make sure it is fully installed into the Voss connecter.
   - Connect the electrical connector.

3. Using T4, pressurize the air suspension.
   For additional information, refer to: Air Suspension System Depressurize and Pressurize (204-05 Vehicle Dynamic Suspension, General Procedures).

4. Install the RH fender splash shield.
   For additional information, refer to: Fender Splash Shield (501-02 Front End Body Panels, Removal and Installation).

VEHICLE DYNAMIC SUSPENSION

AIR SUSPENSION MUFFLER (G522573)

REMOVAL AND INSTALLATION

64.50.01	SILENCER - AIR EXHAUST - RENEW	ALL DERIVATIVES	0.2	USED WITHINS	+

REMOVAL

1. Disconnect the battery ground cable.
   For additional information, refer to: Specifications (414-00, Specifications).

2. Remove the loadspace floor panel.

3. Release the wing nut securing the spare wheel to the air suspension compressor housing. Remove the bolt and collect the cup.

4.

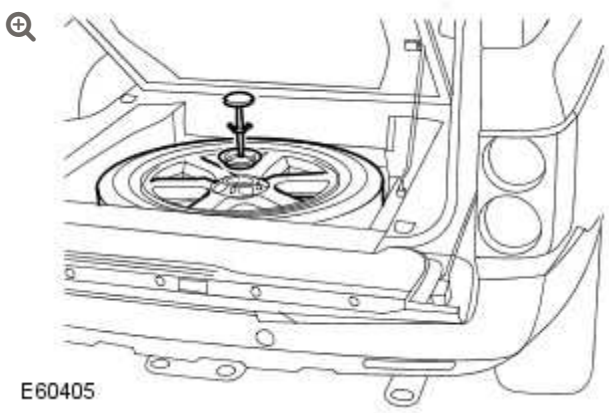

Remove the spare wheel.

- Close the tailgate and install the spare wheel release strap.
- Open the tailgate.
- Disconnect the spare wheel release strap and position aside.

5.

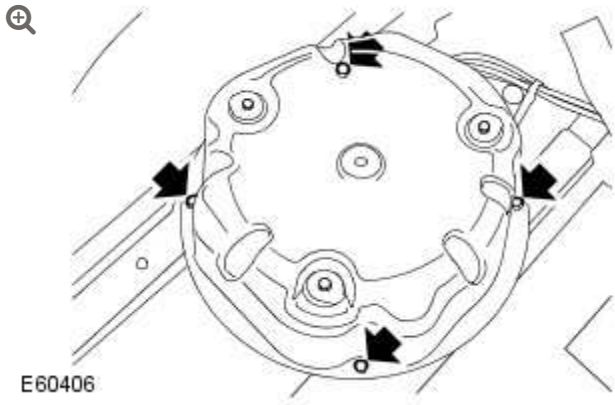

Remove the air suspension compressor cover.

- Remove the 4 bolts.

6.

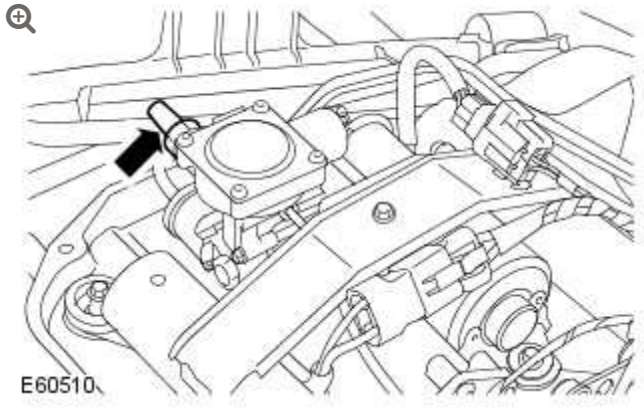

Remove the air suspension compressor muffler.

- Depress the retaining clip.

INSTALLATION

1. Install the air suspension compressor muffler.
   - Clean the component mating faces.
2. **CAUTIONS:**

   - Make sure the air suspension compressor upper cover is correctly positioned.
   - Make sure the electrical harness and air lines are not trapped.

   Install the air suspension compressor upper cover.
   - Tighten the bolts to 10 Nm (7 lb.ft).
3. Install the spare wheel and tire.
   - Install the cup washer and bolt, tighten the wing nut.
4. Install the loadspace floor panel.

5. Connect the battery ground cable.
   For additional information, refer to: Specifications (414-00, Specifications).

VEHICLE DYNAMIC SUSPENSION

AIR SUSPENSION REAR SOLENOID VALVE BLOCK

(G939468)

REMOVAL AND INSTALLATION

64.50.11	VALVE BLOCK ASSEMBLY - RENEW	ALL DERIVATIVES	0.9	USED WITHINS	+

REMOVAL

1. **WARNING:**

   Do not work on or under a vehicle supported only by a jack. Always support the vehicle on safety stands.

   Raise and support the vehicle.

2. Using T4, depressurize the air suspension.
   For additional information, refer to: Air Suspension System Depressurize and Pressurize (204-05 Vehicle Dynamic Suspension, General Procedures).

3. Disconnect the battery ground cable.
   For additional information, refer to: Specifications (414-00 Charging System - General Information, Specifications).

4. **NOTE:**

   Wheel shown removed for clarity.

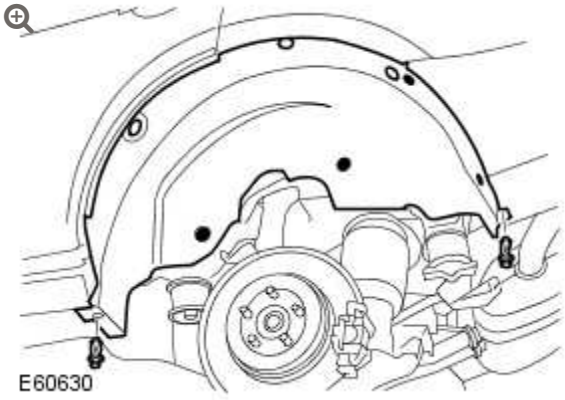

Remove the RH rear fender splash shield.

- Remove the 2 clips securing the rear fender splash shield to the bumper and rocker panel.
- Remove the 3 plastic nuts.
- Remove the 4 screws.
- Remove the fender seal
- Disconnect the tire pressure antenna electrical connector.

5.

CAUTIONS:

- Before the disconnection or removal of any components, ensure the area around joint faces and connections are clean. Plug any open connections to prevent contamination.
- Visually inspect the air line ends for damage or wear. Repair or replace the air line as necessary.

NOTE:

Note the air line fitted positions.

Disconnect the 3 air lines from the air suspension rear solenoid valve block.

6.

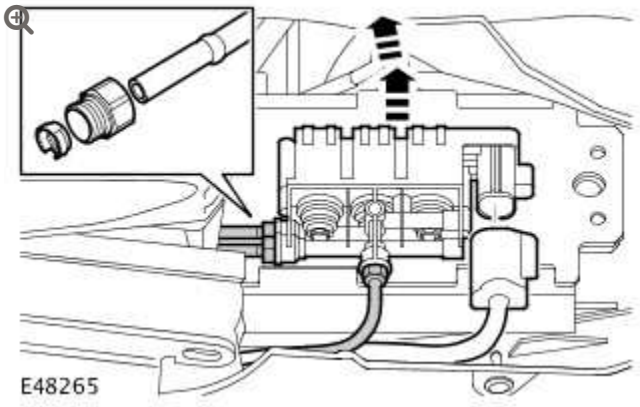

Remove the air suspension rear solenoid valve block.

- Disconnect the electrical connector.
- Release the 3 valve block rubber insulators.

7.

CAUTION:

Break the Voss collet to remove, attempting to slide the collet from the air line will result in damage.

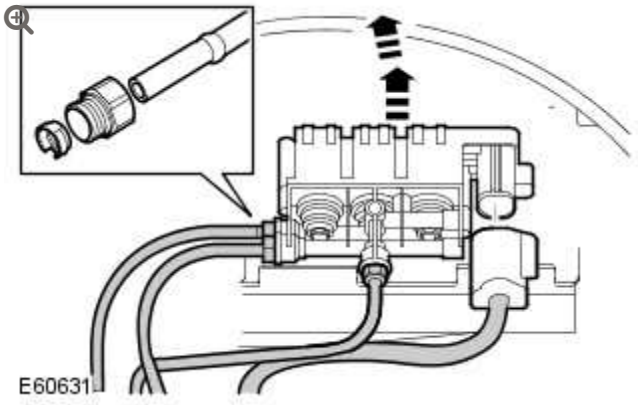

Remove the Voss connectors from the air lines.

- Remove and discard the collet and the union.

INSTALLATION

1.

CAUTION:

Make sure the new Voss connector is installed and fully tightened with the alignment plug installed.

NOTE:

New air suspension components are supplied with new Voss connectors tightened to the correct torque. Do not install new voss connectors if a new component is being installed.

Install new Voss connectors to the air suspension rear solenoid valve block.

- Tighten to 2.5 Nm (1.7 lb.ft).

2. **NOTE:**

   Make sure the valve block does not become detached during connection of the air lines.

   Install the air suspension rear solenoid valve block.

   - Secure the 3 valve block rubber insulators.
   - Connect the air lines into the Voss connector.
   - Pull on each air line to make sure it is fully installed into the Voss connecter.
   - Connect the electrical connector.

3. Install the RH fender splash shield.
   - Install the plastic nuts.
   - Install the screws.
   - Install the clips.
   - Install the fender seal.

4. Connect the battery ground cable.
   For additional information, refer to: Specifications (414-00 Charging System - General Information, Specifications).

5. Using T4, pressurize the air suspension.
   For additional information, refer to: Air Suspension System Depressurize and Pressurize (204-05 Vehicle Dynamic Suspension, General Procedures).

VEHICLE DYNAMIC SUSPENSION

AIR SUSPENSION RESERVOIR (G939469)

REMOVAL AND INSTALLATION

60.50.03	AIR SUSPENSION RESERVOIR - RENEW	ALL DERIVATIVES	0.7	USED WITHINS	+

REMOVAL

1. Using T4, depressurize the air suspension.
   For additional information, refer to: Air Suspension System Depressurize and Pressurize (204-05 Vehicle Dynamic Suspension, General Procedures).

2. **WARNING:**

   Do not work on or under a vehicle supported only by a jack. Always support the vehicle on safety stands.

   Raise and support the vehicle.

3.

Disconnect the battery ground cable.
For additional information, refer to: Specifications (414-00 Charging System - General Information, Specifications).

4.

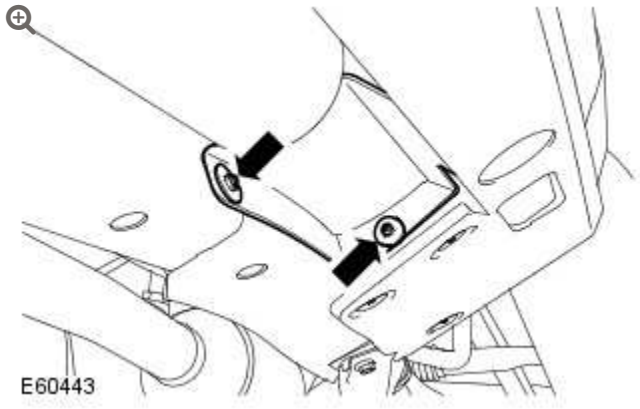

Remove the closing panel.

- Remove the 2 nuts.

5.

WARNING:

The air suspension system is pressurised up to 16.8 bar (244 lbf/in). Make sure no dirt or grease enters the system. Always wear hand, eye and ear safety standard protection when working on the system.

CAUTION:

Before disconnecting or removing the components, ensure the area around the joint faces and connections are clean and dry. Plug open connections to prevent contamination.

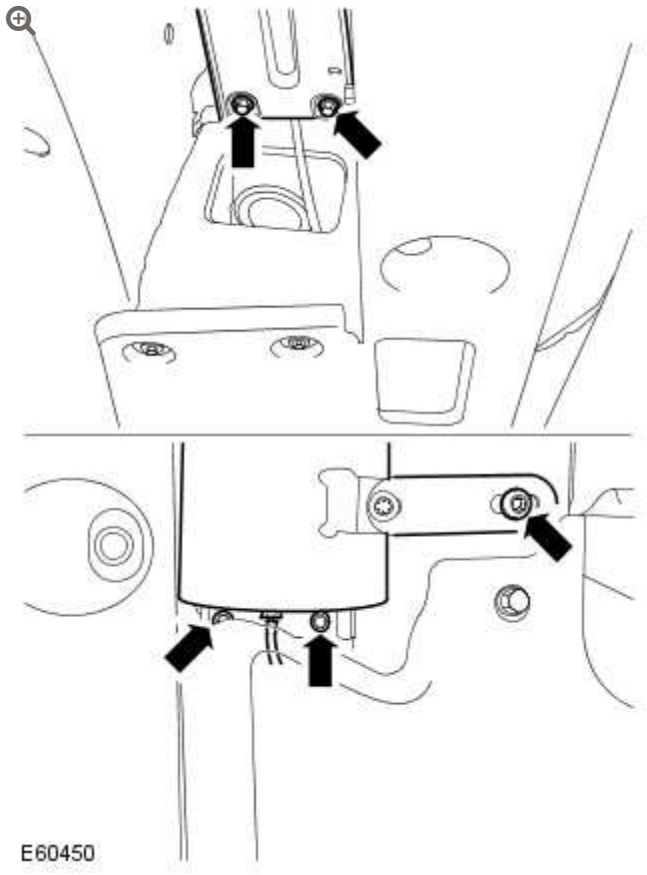

Remove the air suspension reservoir.

- Position a transmission jack to support the component.
- Remove the Torx bolt.
- Remove the 4 bolts.
- Lower the component for access to the Voss connector.

6.

CAUTIONS:

- The air line must only be disconnected by removal of the Voss connector. Do not remove the air line retaining boss from the air suspension reservoir. Failure to follow this instruction may result in damage to the vehicle.
- Break the Voss collet to remove, attempting to slide the collet from the air line will result in damage.

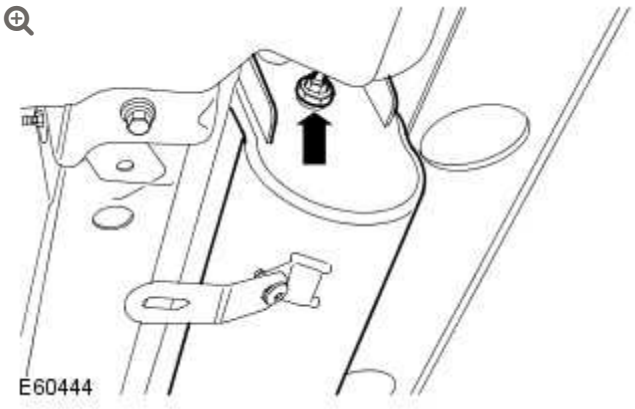

Disconnect the reservoir air line.

- Remove and discard the Voss connector and collet.

7.

NOTE:

Do not disassemble further if the component is removed for access only.

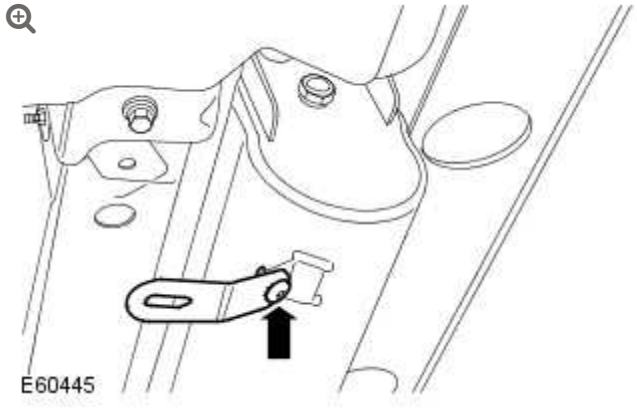

Remove the support bracket.

- Remove the Torx bolt.

INSTALLATION

1. Install the support bracket.
   - Tighten the Torx bolt to 25 Nm (18 lb.ft).
2. **CAUTION:**

   Make sure the new Voss connector is installed and fully tightened with the alignment plug installed.

   NOTE:

   New air suspension components are supplied with new Voss connectors tightened to the correct torque. Do not install new voss connectors if a new component is being installed.

   Install a new Voss connector to the air reservoir.
   - Tighten the new Voss connector to 5 Nm (4 lb.ft).

3. Install the air suspension reservoir.
   - Position a transmission jack to support the component.
   - Remove the Voss collet alignment peg.
   - Connect the air line.
   - Tighten the M6 bolts to 10 Nm (7 lb.ft).
   - Tighten the Torx bolt to 25 Nm (18 lb.ft).
4. Install the closing panel.
   - Install the nuts.
5. Connect the battery ground cable.
   For additional information, refer to: Specifications (414-00 Charging System - General Information, Specifications).

VEHICLE DYNAMIC SUSPENSION

AIR SUSPENSION RESERVOIR SOLENOID VALVE BLOCK (G522571)

REMOVAL AND INSTALLATION

60.50.05	VALVE BLOCK - AIR RESERVOIR - RENEW	ALL DERIVATIVES	0.7	USED WITHINS	+

REMOVAL

1. Using T4, depressurize the air suspension.
   For additional information, refer to: Air Suspension System Depressurize and Pressurize (204-05, General Procedures).

2. Disconnect the battery ground cable.
   For additional information, refer to: Specifications (414-00, Specifications).

3. Remove the air suspension pressure switch.
   For additional information, refer to: Air Suspension Switch (204-05, Removal and Installation).

4.

CAUTIONS:

- Before disconnecting or removing the components, ensure the area around the joint faces and connections are clean and dry. Plug open connections to prevent contamination.
- Break the Voss collet to remove, attempting to slide the collet from the air line will result in damage.

NOTE:

Note the air line fitted positions.

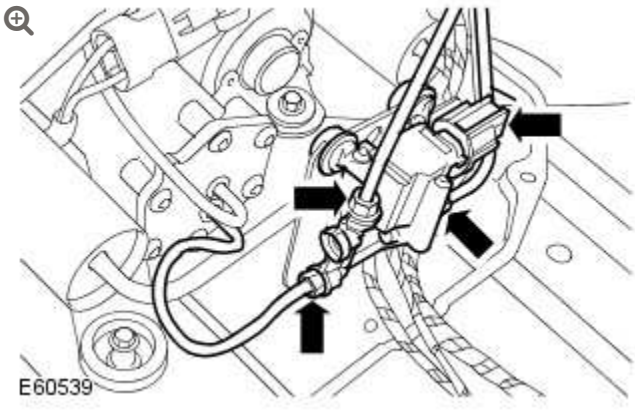

Remove the air suspension reservoir solenoid valve block.

- Disconnect the electrical connector.
- Release the air suspension reservoir solenoid valve block, from the compressor mounting bracket.
- Disconnect the 3 air lines.
- Remove and discard the Voss connector collets and unions from the air lines.
- Remove the 3 rubber insulators.

INSTALLATION

1. **NOTE:**

   New air suspension components are supplied with new Voss connectors tightened to the correct torque. Do not install new voss connectors if a new component is being installed.

   Install the air suspension reservoir solenoid valve block.

   - Install the rubber insulators.
   - Remove the Voss collet alignment pegs.
   - Connect the air lines.
   - Mount the air suspension reservoir valve block.
   - Connect the electrical connector.

2. Install the air suspension pressure switch.
   For additional information, refer to: Air Suspension Switch (204-05, Removal and Installation).

3. Connect the battery ground cable.
   For additional information, refer to: Specifications (414-00, Specifications).

4. Using T4, pressurize the air suspension.
   For additional information, refer to: Air Suspension System Depressurize and Pressurize (204-05, General Procedures).

AIR SUSPENSION SWITCH

(G297502)

REMOVAL AND INSTALLATION

REMOVAL

1. Disconnect the battery ground cable.
   For additional information, refer to: Specifications (414-00, Specifications).
2. Remove the loadspace floor panel.
3. Release the wing nut securing the spare wheel to the air suspension compressor housing. Remove the bolt and collect the cup.
4.

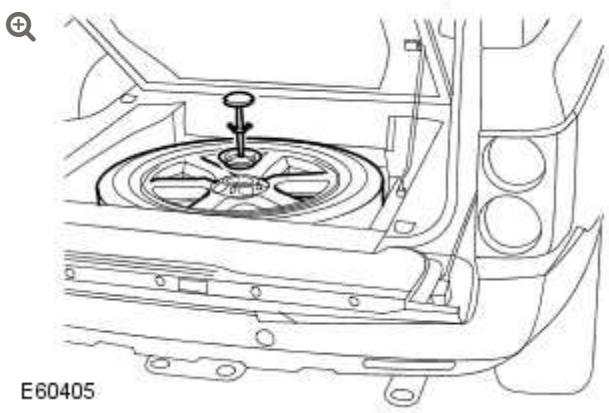

Remove the spare wheel and tire.

- Close the tailgate and install the spare wheel release strap.
- Open the tailgate.
- Disconnect the spare wheel release strap and position aside.

5.

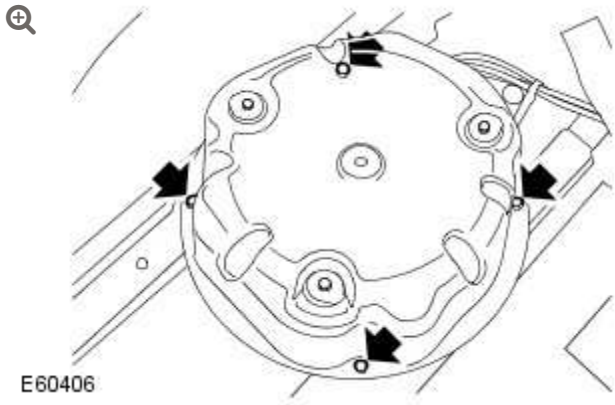

Remove the air suspension compressor cover.

- Remove the 4 bolts.

6.

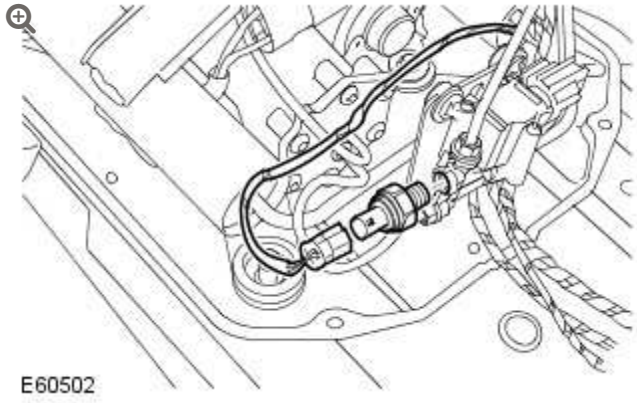

Remove the air suspension pressure switch.

- Disconnect the electrical connector.
- Remove and discard the O-ring seal.

INSTALLATION

1. Install the air suspension pressure switch.
   - Clean the component mating faces.
   - Install a new O-ring seal.
   - Tighten the air suspension pressure switch to 5 Nm (4 lb.ft).
   - Connect and secure the electrical connector.

2. **CAUTIONS:**

   - Make sure the air suspension compressor upper cover is correctly positioned.
   - Make sure the electrical harness and air lines are not trapped.

   Install the air suspension compressor upper cover.

- Tighten the bolts to 10 Nm (7 lb.ft).

3. Install the spare wheel and tire.
   - Install the cup washer and bolt, tighten the wing nut.

4. Install the loadspace floor panel.

5. Connect the battery ground cable.
   For additional information, refer to: Specifications (414-00, Specifications).

VEHICLE DYNAMIC SUSPENSION

AIR SUSPENSION SYSTEM DEPRESSURIZE AND PRESSURIZE (G892809)

GENERAL PROCEDURES

60.50.38	SUSPENSION - DEPRESSURISE - REPRESSURISE	ALL DERIVATIVES	0.3	USED WITHINS

WARNINGS:

- A small amount of air pressure will be left in the air suspension system.
- Eye protection must be worn.

CAUTIONS:

- Make sure tailgate, hood and all doors are closed.
- Make sure the vehicle is in a clear working area.

1.

WARNING:

The air suspension is pressurised. Make sure dirt or grease does not enter the system. Always wear hand, eye and ear safety standard protection when working on the system.

Using the Land Rover approved diagnostic system, depressurize the air suspension.

- Follow the on-screen prompts.

2. Disconnect the Land Rover approved diagnostic system from the vehicle.

2012.0 RANGE ROVER (LM), 204-05

VEHICLE DYNAMIC SUSPENSION

FRONT AIR SPRING (G1615406)

REMOVAL AND INSTALLATION

60.21.01	AIR SPRING ASSEMBLY - ONE SIDE - RENEW	ALL DERIVATIVES	1	USED WITHINS	+
60.21.07	AIR SPRING - ONE SIDE - RENEW	ALL DERIVATIVES	1.1	USED WITHINS	+

SPECIAL TOOL(S)



204-538

Air spring tester

REMOVAL

1. **WARNING:**

   Do not work on or under a vehicle supported only by a jack. Always support the vehicle on safety stands.

   Raise and support the vehicle.

2. For additional information, refer to: Shock Absorber and Spring Assembly (204-01 Front Suspension, Removal and Installation).

3. **NOTE:**

   Mount the assembly in a vertical position.



Using a 8mm allen key and a suitable tool remove the top nut.

4.

NOTE:

Retain the washer for further use.

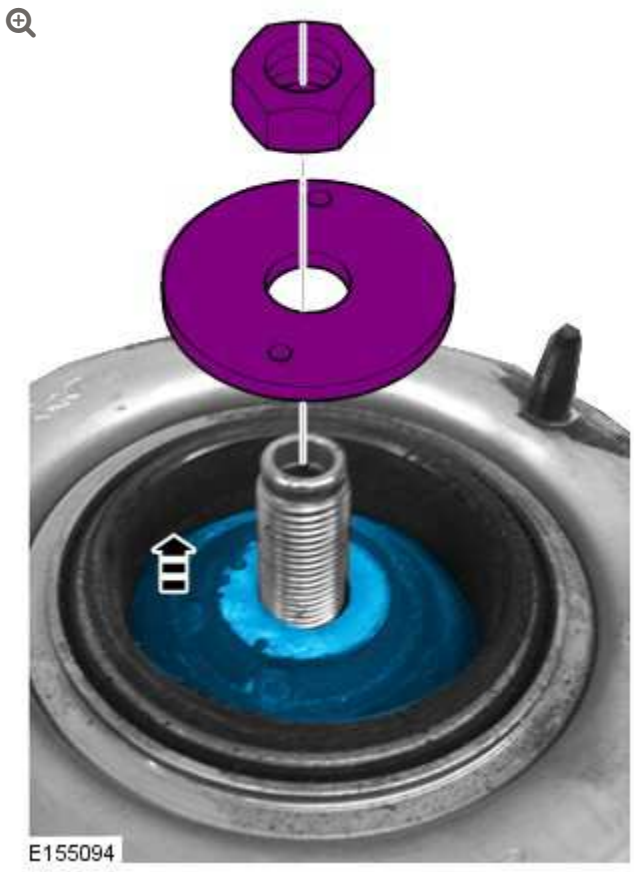

Remove the upper bush.

5.

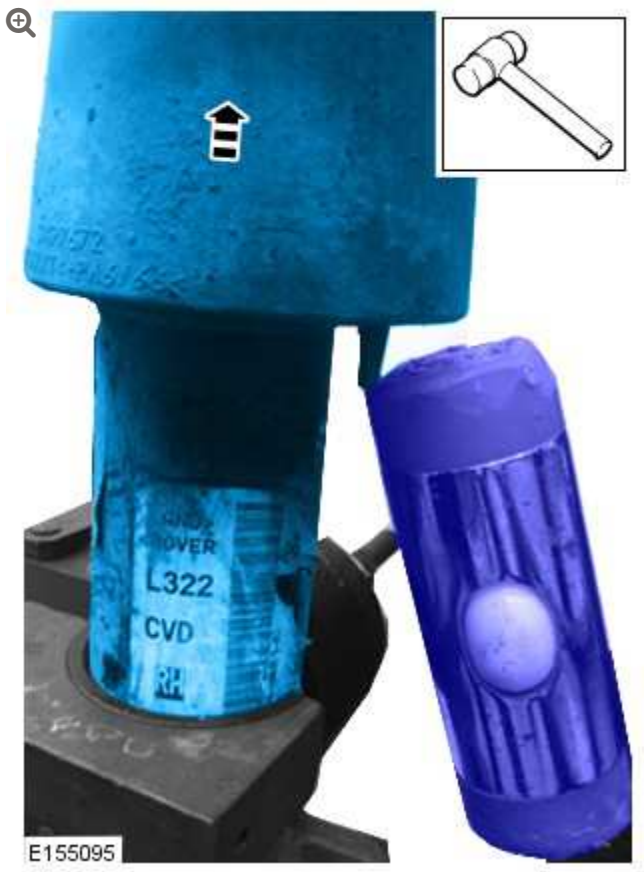

Using a suitable soft hammer tap the plastic piston in the vertical direction to raise it off the spring seat and remove it from the O-rings.

6.

CAUTION:

Remove any dirt from this area before installing.

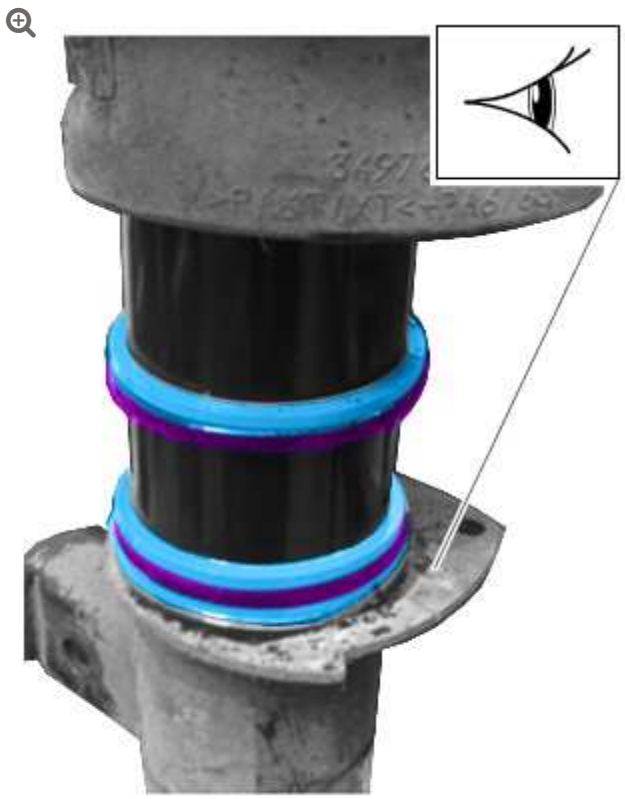

E155096

Raise the piston off the spring seat.

7.

CAUTION:

Before pushing the top mount off the damper rod make sure you have squared up the top mount to the vertical axis as it will be force tilted due to the air spring.



Lift off the top mount from the damper rod, push up in a vertical direction.

INSTALLATION

1.

CAUTION:

Make sure this area is clean from any dirt.

NOTE:

When the air spring is removed the spring aid, bump washer, O-rings and spacer from the damper rod will be displaced.



2. **NOTE:**

Make sure the plastic washer is installed flat to the base prior to installing the spring aid

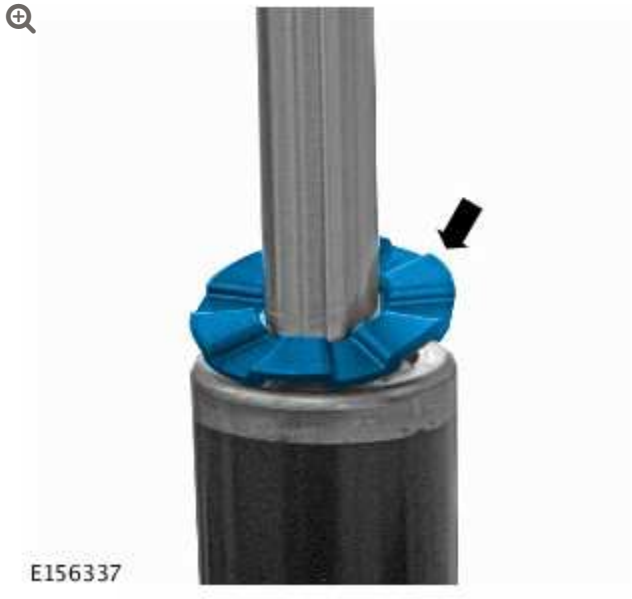

Install new plastic washer as shown.

3.



Install the new spring aid.

4.

NOTE:

Use a suitable protective tape as protection and then pass the spacers and O-rings over the thread, remove the tape after the O-rings are installed.

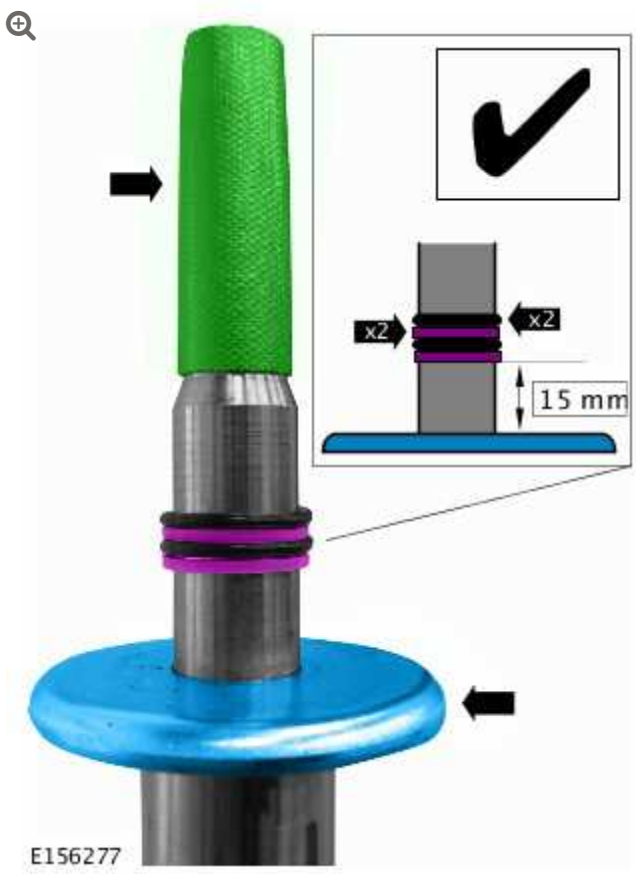

Place the O-rings and spacers in the following order, spacer, O-ring, spacer and O-ring. Place the new bump washer on damper tenon prior to installing the seals.

5.

CAUTION:

Make sure the location washer is installed in the correct orientation with the outer lip facing downwards.



6.



Install the lower O-rings and spacers as follows, spacer, O-ring, spacer, O-ring and spacer.

7.

NOTE:

Before pushing the top mount home on the damper tenon and O-rings, check the correct handed markings on the air sleeve, and then square up the top mount to be at 90 degrees with the axis of the damper



Place the new air spring over the damper rod, entering the damper tenon through the top mount. Lower the piston on the O-rings and push down on the spring seat.

8.

NOTE:

Make sure the protective tape is removed prior to installing the air sleeve and the locating tab on the piston enters the hole in the spring seat.

Install the new air sleeve.

9.



Install the upper rubber bush onto the damper tenon.

10.



Install the rebound washer.

11.



Torque 90 Nm

12.

CAUTIONS:

- Keep hands and fingers away from the area during inflation.
- The shock absorber must be securely mounted in a suitable clamp before carrying out this step.

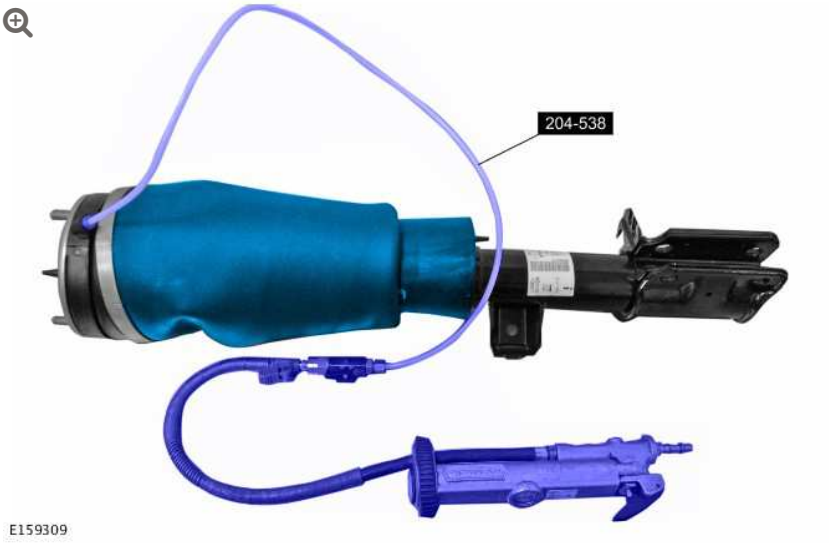

Using the special tool coupled to a tire inflator with a gauge, apply approximately 5 bar of air pressure to the air spring to fully seat the piston over the O-rings.

13. 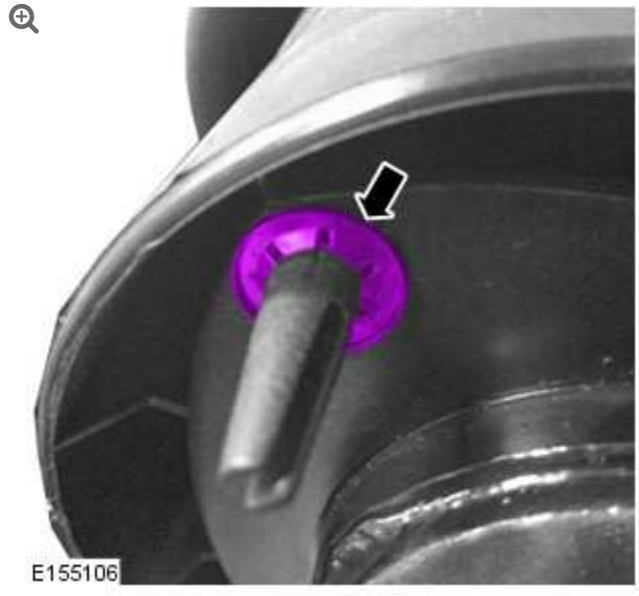

Install the spring clip onto the piston peg below the spring seat using a suitable tool.

14. Carry out an air leak test using a suitable water bath.

15. 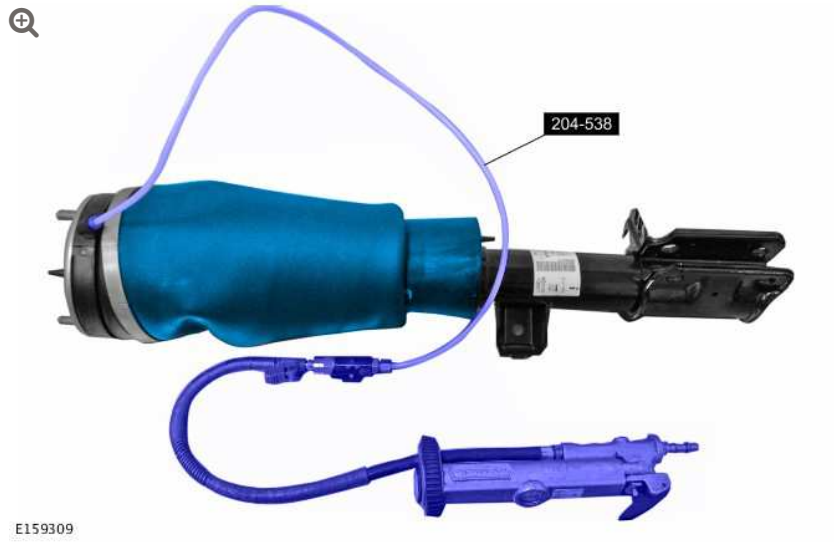

Using the special tool deflate the air spring.

16. For additional information, refer to: Shock Absorber and Spring Assembly (204-01 Front Suspension, Removal and Installation).

2012.0 RANGE ROVER (LM), 204-05

VEHICLE DYNAMIC SUSPENSION

REAR AIR SHOCK ABSORBER (G522575)

REMOVAL AND INSTALLATION

64.30.02	DAMPER - ONE SIDE - RENEW	ALL DERIVATIVES	0.7	USED WITHINS	+

SPECIAL TOOL(S)



204-538

Air spring tester

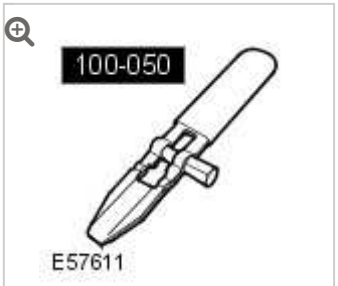

100-050 (LRT-99-019)

Band-it Thrift tool

REMOVAL

NOTE:

This procedure should also be used to remove the rear air spring.

1. **WARNING:**

   Do not work on or under a vehicle supported only by a jack. Always support the vehicle on safety stands.

   Raise and support the vehicle.

2. Remove the wheel and tire.

3. Remove the shock absorber and spring assembly.
   For additional information, refer to: Rear Shock Absorber and Air Spring Assembly (204-05, Removal and Installation).

4.

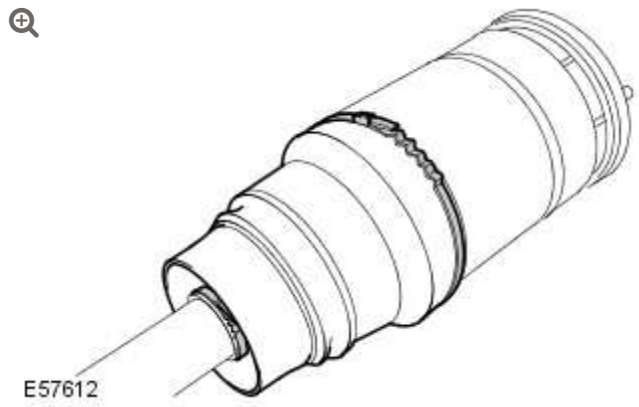

Remove the gaiter.

- Remove and discard the 2 straps.

5.

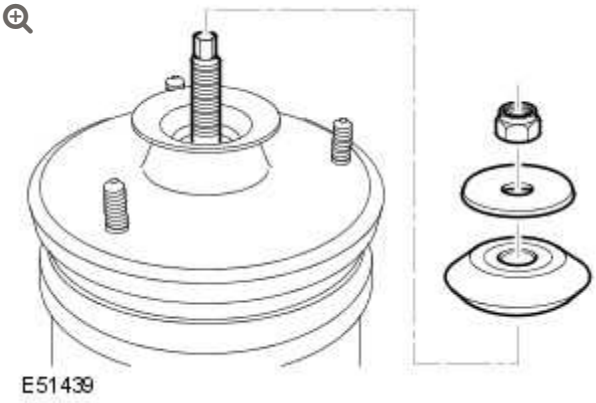

Remove the nut, rebound washer and rubber bushing.

- Discard the nut.

6.

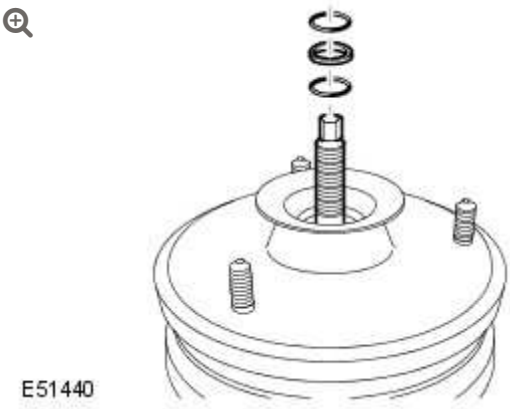

Remove and discard the O-ring seals and spacer.

7.

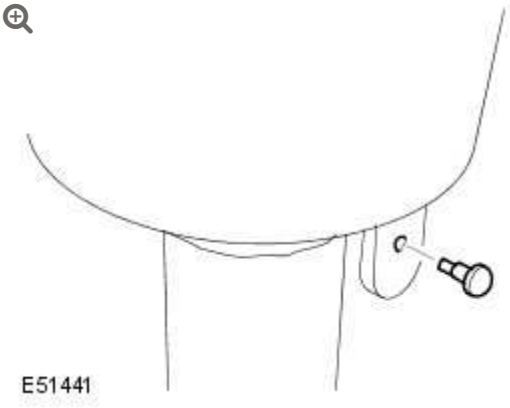

Remove the nylon retaining pin.

8. Remove the rebound plate and spring aid.

9.

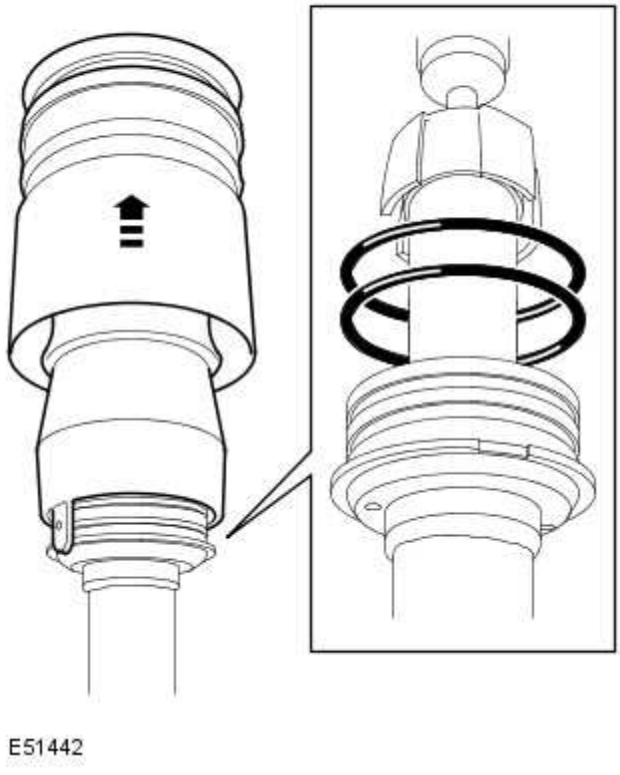

Remove the air spring.

- Using a soft faced mallet, gently tap the sleeve support upwards to release it from the O-ring seals.

- Remove and discard the 2 O-ring seals.

10. Remove the shock absorber from the vise.

INSTALLATION

1. Install the shock absorber in the vise.

2. Clean the components.

3. Lubricate and install new O-rings to the seal carrier.

4. Install the spring aid and rebound plate.

5. 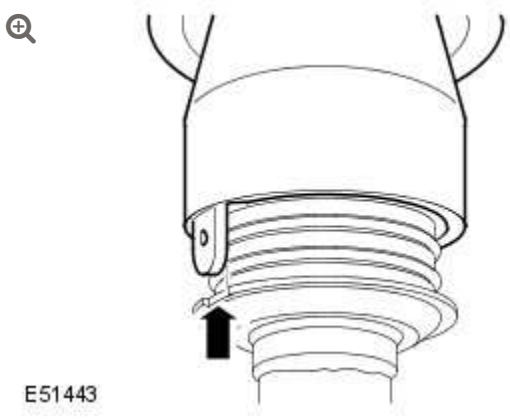

   Install the air spring.

   - Align the piston with the first O-ring seal, making sure the location tag is correctly aligned.

6. Install the new O-ring seals and spacer, taking care not to damage the seals.

7.

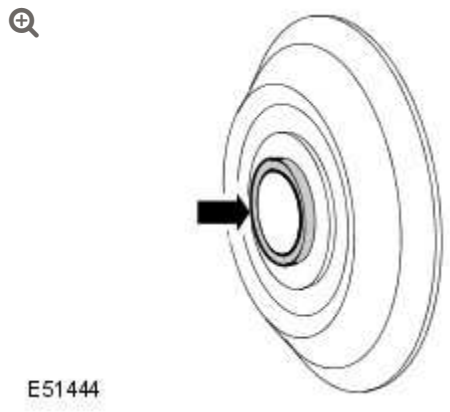

Install the rubber bushing and rebound washer.

- Make sure the formed insert on the bushing is located against the O-ring seal.

8. Install and lightly tighten the nut.

9. **CAUTIONS:**

   - The air supply must be free of any moisture.
   - If during disassembly the air sleeve is unrolled, the air sleeve may inflate incorrectly (to one side). If this occurs, release the air pressure, and insert a suitable tool that will not damage the air sleeve or piston (a screw driver handle), into the side opposite the bulge. Inflate and deflate until the air sleeve inflates correctly (the air sleeve will be uniform inside the shroud).

   Install the air spring piston over the O-ring seals.

   - Using the special tool coupled to a tire inflator with a gauge, apply approximately 2 bar of air pressure to the air spring to fully seat the piston over the O-ring seals.

10. Tighten the top nut to 98 Nm (72 lb.ft).

11. Check the assembly for leaks.
    - Inflate the module to 4 bar and check for pressure loss.
    - If a leak is suspected, immerse the spring and shock absorber assembly in a tank of water to locate the source of the leak.

12. 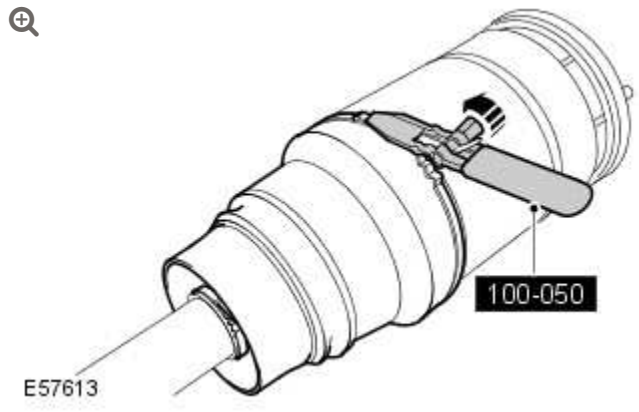

    Install the gaiter.
    - Using the special tool, install new straps.

13. Install the shock absorber and spring assembly.
    For additional information, refer to: Rear Shock Absorber and Air Spring Assembly (204-05, Removal and Installation).

REAR AIR SPRING (G915486)

REMOVAL AND INSTALLATION

REMOVAL

CAUTION:

Do not depressurize the air suspension system before raising the vehicle.

NOTE:

It is not necessary to depressurize the whole system, only the side from which the suspension air spring is being replaced.

1. **WARNING:**

   Do not work on or under a vehicle supported only by a jack. Always support the vehicle on safety stands.

   Raise and support the vehicle.

2. Remove the road wheel.

3. **NOTE:**

> It is not necessary to depressurize the whole system, only the side from which the suspension air spring is being replaced.

Using the Land Rover approved diagnostic system, depressurize the air suspension.
For additional information, refer to: Air Suspension System Depressurize and Pressurize (204-05, General Procedures).

4. 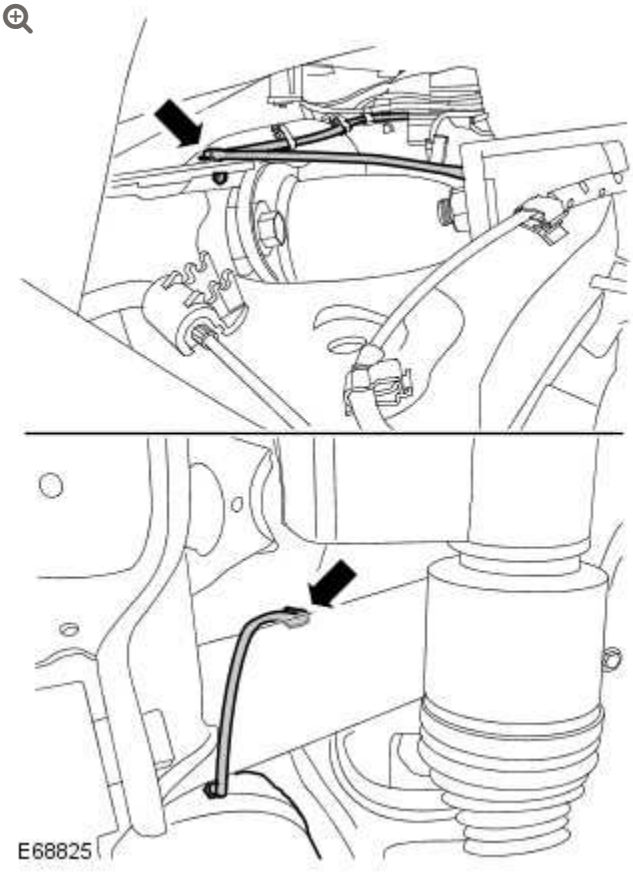

Release the air suspension air line.

- Release from the 2 clips.

5.

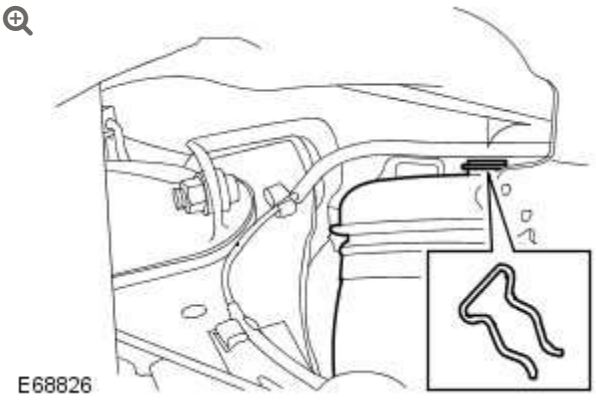

Release the rear air spring from the sub-frame.

- Remove the clip.

6. Release the rear air spring from the lower arm.

- Remove the screw.

7.

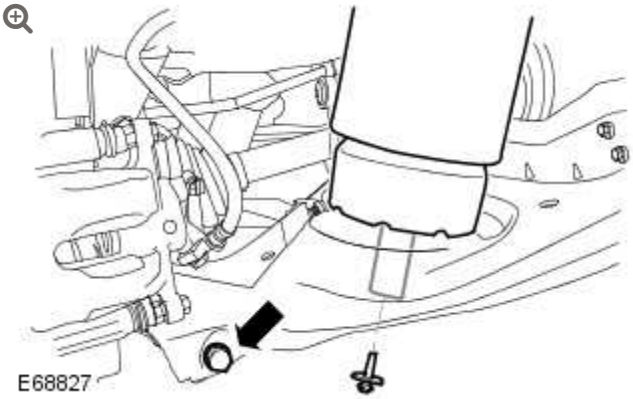

Release the damper from the lower arm.

- Remove the bolt and discard the nut.

8.

CAUTIONS:

- Do not remove the Voss connector from the air line. Removal of the connector from the line could cause the connector to scratch the line and increase the likelihood of a leak.
- Before disconnecting or removing the components, make sure the area around the joint faces and connections are clean. Plug open connections to prevent contamination.

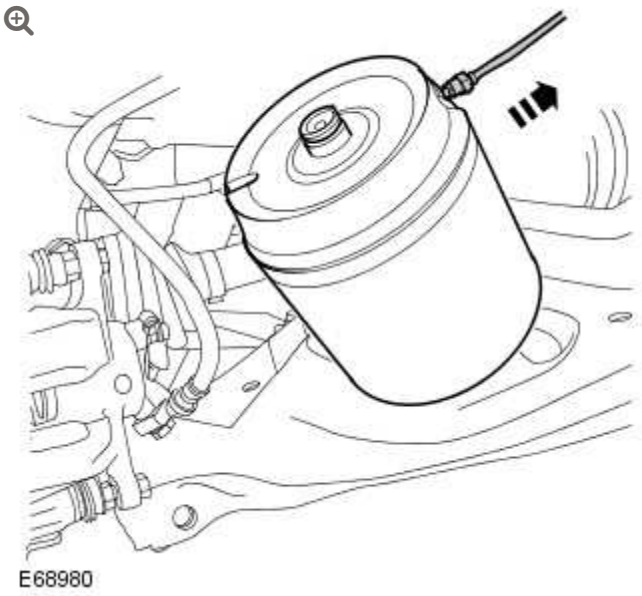

With assistance, remove the rear air spring.

- Lower the suspension arms.
- Release the rear air spring.
- Disconnect the air line.

INSTALLATION

1.

CAUTIONS:

- Align the air suspension spring to the lower arm.
- Do not tighten the union fully until the air suspension spring is correctly aligned.
- Do not extend or compress the air spring.

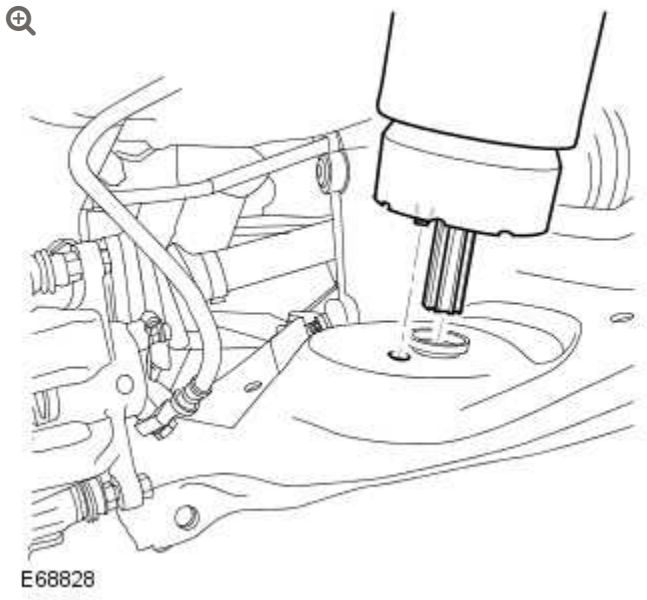

With assistance, install the rear air spring.

- Clean the components mating faces.
- Connect the air suspension air line.
- Tighten the union to 4 Nm (3 lb.ft).

2. Secure the rear air spring to the lower arm.
   - Tighten the screw to 7 Nm. (5 lb.ft).

3.

CAUTION:

Nuts and bolts must be tightened with the weight of the vehicle on the suspension.

Engage the damper with the lower arm.

- Install bolt and tighten new nut to 110 Nm (81 lb.ft).

4. Secure the air suspension air line.
   - Secure in the 2 clips.

5. **NOTE:**

   Pressurize the system sufficiently to expand the air suspension spring to its upper location.

   Secure the rear air spring to the sub-frame.
   - Install the clip.

6. Using the Land Rover approved diagnostic system, pressurize the air suspension.
   For additional information, refer to: Air Suspension System Depressurize and Pressurize (204-05, General Procedures).

7. Install the road wheel.
   - Tighten the wheel nuts to 140 Nm (103 lb.ft).

VEHICLE DYNAMIC SUSPENSION

RIDE HEIGHT ADJUSTMENTS (G1234886)

GENERAL PROCEDURES

60.90.03	CALIBRATE - AIR SUSPENSION	ALL DERIVATIVES	0.3	USED WITHINS

SPECIAL TOOL(S)



204-557B

Gauge, Ride height

CAUTIONS:

- Make sure the wheels and tires, tie rod ends, suspension joints and wheel bearings are free from damage, wear and free play.
- Make sure there are no heavy objects in the vehicle.
- The ride height must be measured with the vehicle weight supported by the suspension.
- With the engine running and all vehicle doors closed, make sure the air suspension is functioning and the vehicle height can be raised and lowered using the air suspension switch.
- Drive the vehicle on to a flat, level surface.
- Make sure the steering wheel is in the straight ahead position.

NOTE:

This procedure must be carried out after replacement of the air suspension control module, removal or replacement of a height sensor, removal or replacement of the front or rear suspension arms, replacement of body panels incorporating suspension fixing points.

1. **CAUTION:**

   Make sure the vehicle is not moved once it has been positioned to take measurements.

   Position the vehicle on a flat level surface.

2. Connect the diagnostic tool to the vehicle data link connector (DLC).
   - Connect the vehicle data link cable into the vehicle communications module.
   - Connect the diagnostic tool USB Lead into the vehicle communications module.
   - Connect the data link cable to the data link connector.
   - Connect the diagnostic tool USB lead to the diagnostic tool USB port.

3. **CAUTION:**

   Make sure the ignition switch is turned off, the park brake is on and the selector lever is in park.

   NOTE:

   IDS already loaded with the latest issue of software.

   Switch IDS on and navigate to the vehicle identification number (VIN) input screen.

4. Enter the vehicle identification number (VIN) and navigate to the vehicle configuration menu.
   - Select setup and configuration.
   - Select air suspension height calibration and read all warnings and cautions.
   - Follow the on-screen prompts.

5.

CAUTION:

The diagnostic tool will cause the vehicle height to change during some parts of the calibration process.

NOTES:

- Do not install the special tool over a locking wheel nut.
- Make sure the special tool is square to the wheel face with the measuring rod in a vertical position.
- Take the measurement from the top edge of the slider on the special tool.
- Make sure the fender splash shields are correctly fitted.

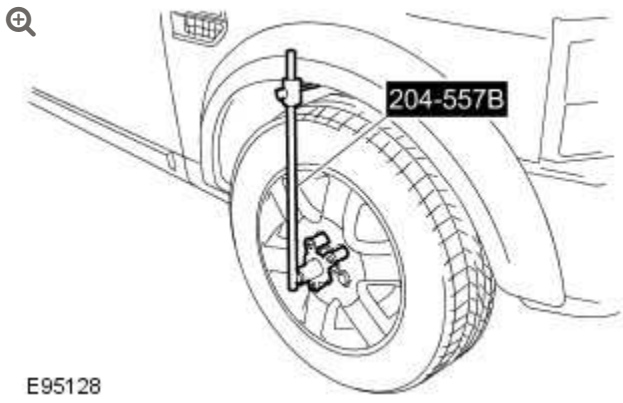

Once in the suspension height measurement screen, use the special tool to measure and record the height setting from each wheel center to the wheel arch.

- Follow the on-screen prompts.

6.

After successful calibration of the air suspension switch off the diagnostic tool and return to its original position.

2012.0 RANGE ROVER (LM), 204-05

VEHICLE DYNAMIC SUSPENSION

SUSPENSION HEIGHT SENSOR (G892811)

REMOVAL AND INSTALLATION

60.36.01	SENSOR - HEIGHT - FRONT - RENEW	ALL DERIVATIVES	0.2	USED WITHINS	+

REMOVAL

NOTES:

- This procedure covers removal and installation of both the front and rear suspension height sensors.
- LH height sensor arms are colour coded white. RH height sensor arms are colour coded black.

1.

WARNING:

Do not work on or under a vehicle supported only by a jack. Always support the vehicle on safety stands.

Raise and support the vehicle.

2.

CAUTION:

Note the position of the wiring harness.

NOTE:

LH front height sensor shown, other height sensors similar.

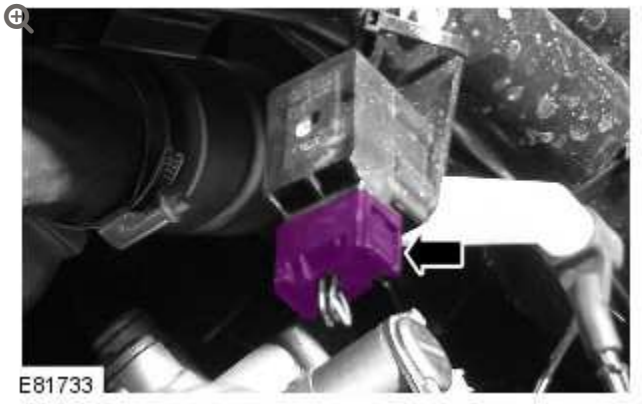

Disconnect the height sensor electrical connector.

3.

CAUTION:

Do not use excessive force to disconnect the height sensor link.

NOTE:

LH front height sensor shown, other height sensors similar.

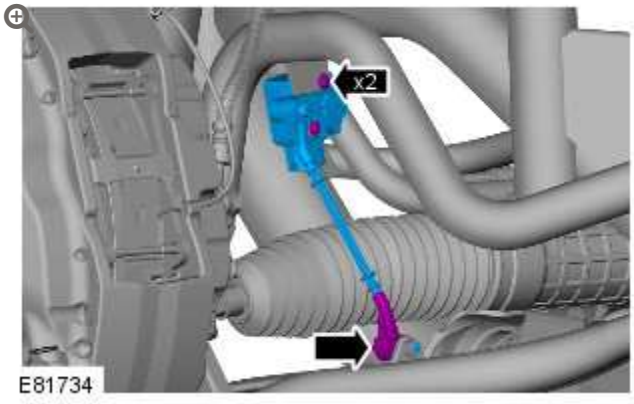

Remove the suspension height sensor.

- Disconnect the height sensor link.
- Remove the 2 screws.

INSTALLATION

1.

CAUTION:

Make sure that the wiring harness into the back of the electrical connector is not pulled tightly and exits the electrical connector with a good bend radius.

NOTE:

There should be 25 to 50mm of un-taped wiring out of the back of the connector. If the taping goes closer to the connector than this then the excess should be removed.

To install, reverse the removal procedure.

- Tighten the screws to 2.5 Nm (1.7 lb.ft).

2.

CAUTION:

Calibration of the air suspension system must be carried out if the suspension height sensor is loosened or removed.

Using the Land Rover approved diagnostic system, calibrate the suspension ride height.
For additional information, refer to: Ride Height Adjustments (204-05, General Procedures).

RIDE AND HANDLING OPTIMIZATION SWITCH

(G850403)

REMOVAL AND INSTALLATION

86.65.11	SWITCH - TERRAIN RESPONSE™ - RENEW	ALL DERIVATIVES	0.5	USED WITHINS	+

REMOVAL

1. Disconnect the battery ground cable.
   For additional information, refer to: Specifications (414-00, Specifications).

2. Remove the floor console upper panel.
   For additional information, refer to: Floor Console Upper Panel (501-12, Removal and Installation).

3.

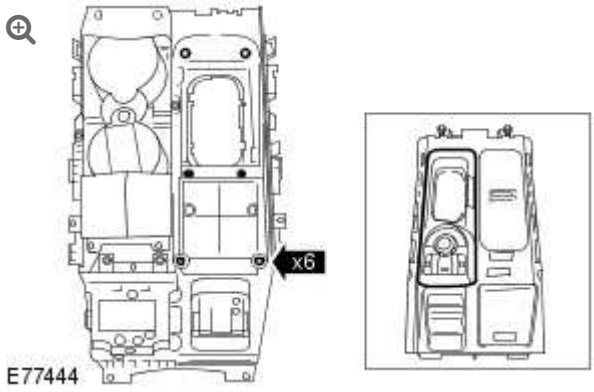

Remove the ride and handling optimization switch.

- Remove the 6 screws.

INSTALLATION

1. Install the ride and handling optimization switch.
   - Install the 6 screws.
2. Install the floor console upper panel.
   For additional information, refer to: Floor Console Upper Panel (501-12, Removal and Installation).
3. Connect the battery ground cable.
   For additional information, refer to: Specifications (414-00, Specifications).

RIDE AND HANDLING OPTIMIZATION

DIAGNOSIS AND TESTING

PRINCIPLES OF OPERATION

Ride and handling optimization incorporates the adaptive damping system and also the terrain response system which links a number of modules around the vehicle to give the best combination of settings in the different systems.

For information on the description and operation of the system, refer to the relevant Description and Operation section of the workshop manual.

INSPECTION AND VERIFICATION

CAUTION:

Diagnosis by substitution from a donor vehicle is NOT acceptable. Substitution of control modules does not guarantee confirmation of a fault, and may also cause additional faults in the vehicle being tested and/or the donor vehicle.

1. Verify the customer concern.

2. Visually inspect for obvious mechanical or electrical faults.

Visual Inspection

MECHANICAL	ELECTRICAL
▪ Tire condition, pressures, etc ▪ Driveline components (correct installation, damage, etc) ▪ Engine components (correct installation, damage, etc) ▪ Transmission components (correct installation, damage, etc) ▪ Suspension components (correct installation, damage, etc)	▪ Fuses ▪ Harnesses/Connectors ▪ Terrain Response Control Module (ATCM) ▪ Engine Control Module (ECM) ▪ Transmission Control Module (TCM) ▪ Transfer Case Control Module (TCCM) ▪ ABS Control Module ▪ Rear Differential Control Module (RDCM) ▪ Air Suspension Control Module (SUMB) ▪ Controller Area Network (CAN) circuits

3. If an obvious cause for an observed or reported concern is found, correct the cause (if possible) before proceeding to the next step.

4. Use the approved diagnostic system or a scan tool to retrieve any diagnostic trouble codes (DTCs) before moving onto the symptom chart or DTC index.

- Make sure that all DTCs are cleared following rectification.

SYMPTOM CHART

Because the overall function of the system is dependent on sub-systems, it is possible to misinterpret displays in the message center as being terrain response faults when they are actually a result of a fault in one of the sub-systems.

Refer to the table below for help in deciding when to investigate terrain response faults and when the fault is likely to be in a sub-system.

SYMPTOM	DESCRIPTION	POSSIBLE CAUSES	ACTION
Message center display indicating a sub-system fault	The message center indicates to the driver that a fault has occurred and in which sub-system	▪ Any sub-system fault supported by the message center	For details of the available messages, refer to the relevant section of the workshop manual. Carry out a complete vehicle DTC read and follow the diagnostic routine(s) indicated.
Message center display: **TERRAIN RESPONSE SPECIAL PROGRAMS NOT AVAILABLE**, terrain response switch operation normal	This message will display when a sub-system fault has occurred if the driver attempts to change the special program, and at each ignition on cycle for 5 seconds until the fault is rectified	▪ Any sub-system fault supported by the message center	For details of the available messages, refer to the relevant section of the workshop manual. Carry out a complete vehicle DTC read and follow the diagnostic routine(s) indicated.
Message center display: **TERRAIN RESPONSE – NOT AVAILABLE**, **ALL** terrain	CAN circuit errors	▪ CAN circuit: short circuit to ground ▪ CAN circuit: short circuit to power	Carry out a complete vehicle DTC read and follow the diagnostic routine(s) indicated.

SYMPTOM	DESCRIPTION	POSSIBLE CAUSES	ACTION
response switch LEDs illuminated		▪ CAN circuit: high resistance	
Special program changes not available	User error	▪ Engine not running ▪ Rock crawl selected with transfer box in high range ▪ Special program change attempted with ABS or DSC active ▪ This includes ABS cycling as part of HDC ▪ Special program change attempted with an overheat condition present in the center or rear differential	Refer to the relevant section of the workshop manual. Make sure that the driver is familiar with the correct operation of the system.

DTC INDEX

For a list of Diagnostic Trouble Codes (DTCs) that could be logged on this vehicle, please refer to Section 100-00.

2012.0 RANGE ROVER (LM), 204-06

RIDE AND HANDLING OPTIMIZATION

DESCRIPTION AND OPERATION

Terrain Response - Component Location

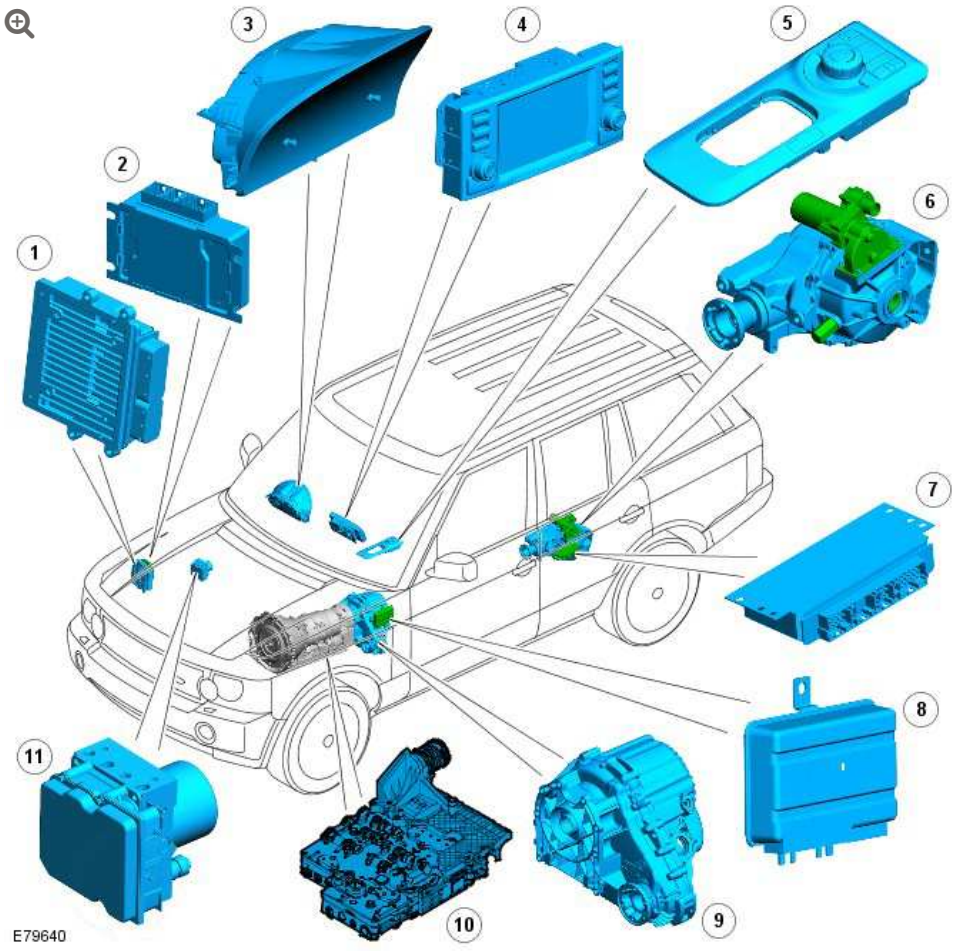

ITEM	DESCRIPTION
1	engine control module (ECM)

ITEM	DESCRIPTION
2	Transfer box control module
3	Instrument cluster
4	Touch Screen Display (TAD)
5	Terrain Response rotary control (shown), or rocker switch
6	Rear differential
7	Rear differential control module
8	Air suspension control module
9	Transfer box (center differential and high/low range)
10	transmission control module (TCM)
11	anti-lock brake system (ABS) module

INTRODUCTION

The Terrain Response™ system allows the driver to select a program which aims to provide the optimum settings for traction and performance for the prevailing terrain conditions. The system cannot be switched off. The 'special programs off' is the default program and covers all general driving conditions. Four specific terrain programs are selectable to cover all terrain surfaces.

Depending on vehicle specification the system is controlled by either a rotary control or rocker switch located on the floor console, rearward of the transmission selector lever. Both of these controls allow the selection of one of the following five programs:

- Special programs off
- Grass/Gravel/Snow
- Mud/Ruts
- Sand
- Rock crawl.

The rotary-control type selector can be rotated through 360 degrees or more in either direction to select each program in turn. Whereas the rocker-switch type selector moves forward or back through the five program selections. The instrument cluster will display the selected program in the message center.

The Terrain Response system uses a combination of a number of vehicle subsystems to achieve the required vehicle characteristics for the terrain selected. The following subsystems make up the Terrain Response system:

- Engine management system
- Automatic transmission
- Transfer box (center differential)
- Rear differential (electronically controlled)
- Brake system (DSC/ETC/HDC functions)
- Air suspension.

A Terrain Response control module is located, depending on specification, below the rotary control or rocker switch. The control module detects the program selection made and transmits a signal on the high speed controller area network (CAN) bus which is received by each of the subsystem control modules.

Each of the affected sub-system control modules contain software which applies the correct operating parameters to their controlled system for the Terrain Response program selection made.

They also provide feedback for the selected program so that the Terrain Response control module can check that all systems have changed to the correct operating parameters.

Information is displayed in the instrument cluster message center which informs the driver of improvements which can be made to the

vehicle operating parameters to optimize the vehicle for the prevailing conditions. Inexperienced off-road drivers may benefit from the automatic assistance of the Terrain Response system and the driver information. Experienced off-road drivers can select the specific programs for extreme conditions to access control over the vehicle systems for example, transmission shift maps, accelerator pedal maps or traction settings.

TERRAIN RESPONSE

TERRAIN RESPONSE CONTROLS

The type of Terrain Response control fitted will depend on the specification of the vehicle.

When the vehicle is fitted with a gear selector lever, Terrain Response selection is via a rotary control. There are five Terrain Response programs marked around the control.

When the vehicle is fitted with a rotary drive selector, Terrain Response selection is via a rocker switch. The switch is used to move forward or back through the five program selections.

Each program is denoted by a symbol which represents the terrain encountered.

Information relating to the suitability of each selected program on different types of surface, is given on the touch screen, via the '4 x 4 Info' soft key. The displayed text is relevant to the currently selected program.

The Terrain Response control module is located below either the Terrain Response control. The module is connected via a harness connector which also contains the wiring for the: Hill Descent Control (HDC) switch, transfer box high/low range switch, air suspension control switch and the switch illumination circuits.

Rotary-Control Type Selector

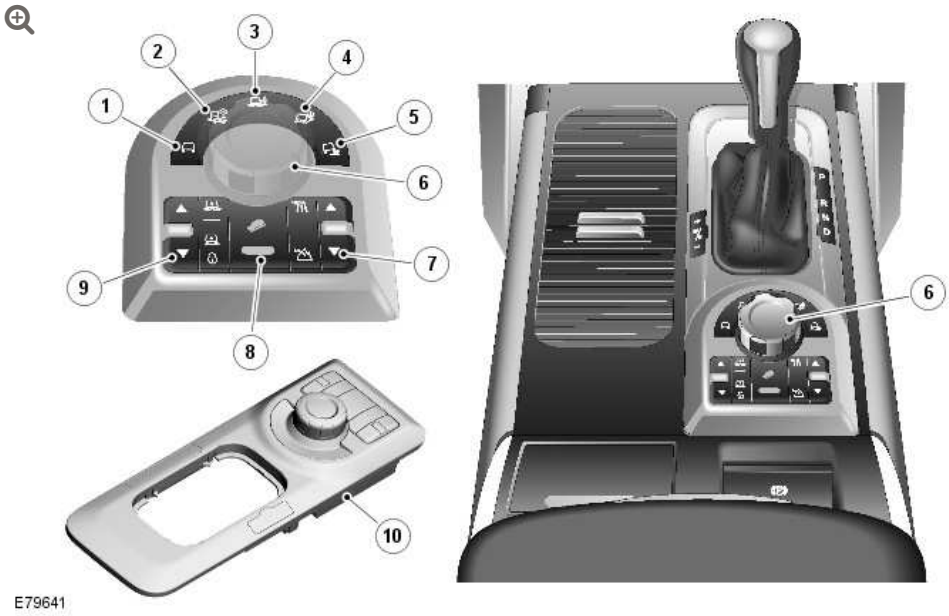

ITEM	DESCRIPTION
1	Special programs off
2	Grass/gravel/snow program
3	Mud/ruts program
4	Sand program
5	Rock crawl program
6	Terrain Response rotary control
7	Transfer box high/low range switch
8	Hill Descent Control (HDC) switch
9	Air suspension control switch
10	Terrain Response control module

Rocker-Switch Type Selector

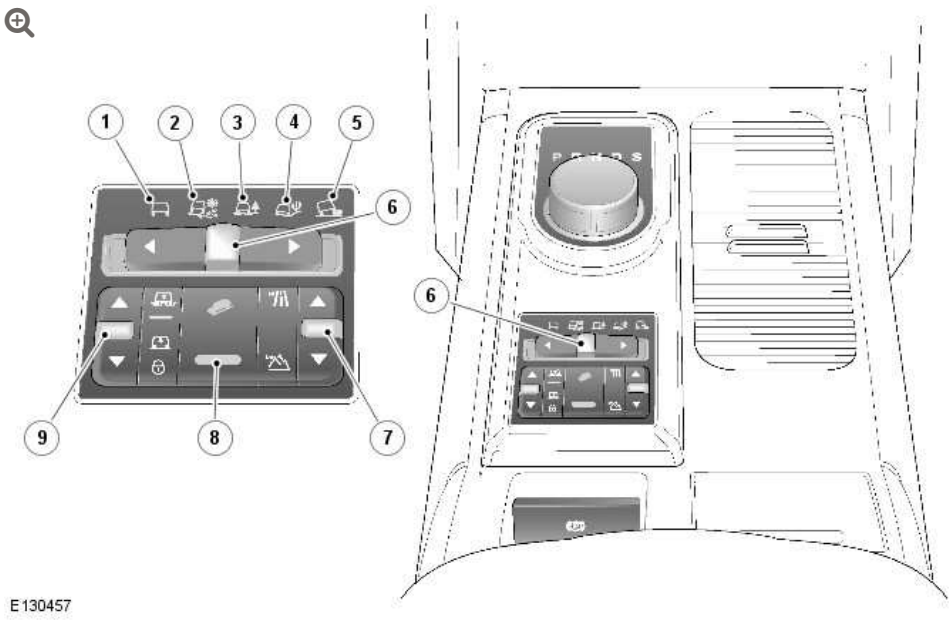

ITEM	DESCRIPTION
1	Special programs off
2	Grass/gravel/snow program
3	Mud/ruts program
4	Sand program
5	Rock crawl program
6	Terrain Response rocker switch
7	Transfer box high/low range switch
8	Hill Descent Control (HDC) switch
9	Air suspension control switch

PRINCIPLES OF OPERATION

The following vehicle subsystem control modules are used for the Terrain Response system:

- Engine management (ECM)
- Transmission control (TCM)

- Transfer box control (transfer box and center differential control module)
- Rear differential control (rear differential control module - if fitted)
- Air suspension control (air suspension control module)
- Brake system (DSC/ETC/HDC functions) (ABS module)

Each subsystem operates in different ways in relation to the selected Terrain Response program to achieve the optimum traction, stability and ease of control for the terrain encountered. The system has a safety factor built in which ensures that any program can be safely used on any surface, even when an inappropriate program selection has been made.

ENGINE MANAGEMENT SYSTEM (EMS)

The EMS varies the accelerator pedal response to control the engine torque output. The EMS can change the accelerator pedal maps to change the amount of torque per percentage of pedal travel. The EMS can also change the accelerator response to control the allowed torque change relative to the percentage pedal travel.

Each terrain program uses a combination of operating parameters for each subsystem. Changing between terrain programs initiates a different set of operating characteristics which will be noticeable to the driver. The driver will notice differences in engine and accelerator response when, for example, the accelerator pedal is held in a constant position and the terrain program is changed from grass/gravel/snow to sand, the driver will notice the torque and engine speed increase. If the terrain program is changed from sand to grass/gravel/snow the driver will notice a reduction in torque and engine speed.

NOTE:

The change in torque and engine speed can take approximately 30 seconds and care must be taken not to confuse the Terrain Response system operation with an EMS fault.

TRANSMISSION CONTROL

The TCM changes the shift maps for the Terrain Response program selected. This changes the shift points providing early or late upshifts and downshifts.

On slippery surfaces the transmission will select 2nd gear in high range or 3rd gear in low range for starting from a standstill to minimize wheel slip. In muddy conditions the transmission will provide maximum torque output from the transmission. In sand the transmission will provide an output which passes maximum engine power from the transmission.

In rock crawl special program (low range only) the transmission will select 1st gear for driving off.

Sport mode is only available when the general program is selected and the transfer box is in high range. Sport mode is disabled in low range and when any Terrain Response special program is selected. CommandShift™ is available in any program and also in high or low range.

If the transmission is in 'Sport' mode and a special program is subsequently selected, the transmission will automatically change to manual 'CommandShift™' mode. If a special program is already selected and the transmission selector lever is moved from drive 'D' to the 'Sport' mode position, the transmission will automatically change to 'CommandShift™' mode.

TRANSFER BOX AND REAR DIFFERENTIAL CONTROL

The transfer box electronically controlled differential and the rear electronically controlled differential are treated as one system. The electronic rear differential is an optional fitment on vehicles fitted with the Terrain Response system. The differential control has two operating strategies; pre-emptive and reactive.

The pre-emptive strategy anticipates and predicts the locking torque value required for each differential to minimize slip and maximize stability. Each Terrain Response program has a different threshold and input criteria for the pre-emptive strategy. The pre-emptive strategy improves vehicle traction and composure by avoiding wheel spin. This is achieved by anticipating the amount of differential lock required for the program selected. For example, a high locking torque would be applied for rock crawl or slippery surfaces.

The reactive strategy varies the amount of locking torque in response to the actual slip level and the dynamic behavior of the vehicle. Each Terrain Response program has a different threshold and input for the reactive strategy. The reactive strategy improves vehicle traction and composure by eliminating any wheel spin which has occurred after the pre-emptive strategy was applied. The locking torque applied is applicable to the terrain program selected, for example, very sensitive on slippery surfaces to provide maximum traction and minimize surface damage.

The Dynamic Stability Control (DSC) function of the ABS can override the Terrain Response differential control and reduce any applied locking torque during DSC action.

AIR SUSPENSION CONTROL

The air suspension control module contains a strategy which provides automatic switching between normal and off-road heights. Changes in vehicle height settings will be relayed to the driver via the instrument cluster message center and light emitting diode (LED) illuminated icons on the switch. The automatic selection of off-road

ride height provides an increase in ground clearance and aims to provide maximum benefit to the selected terrain program.

On a vehicle fitted with a correctly installed, Land Rover approved trailer socket, if an electrical load is sensed on the trailer socket, height changes are prohibited and the message center displays a message advising that a trailer is connected and off-road height is not automatically selected. The driver can raise the suspension manually using the air suspension switch.

NOTE:

The prohibiting of the automatic ride height selection is only operational if a Land Rover approved trailer socket is fitted and an electrical load is sensed on the socket.

BRAKE SYSTEM CONTROL

The ABS module controls several vehicle functions and adjusts the operating parameters of these functions to optimize the selected Terrain Response program.

Traction control uses different slip/acceleration thresholds to improve traction and vehicle composure. For example, the system sensitivity is increased on slippery surfaces to reduce wheel spin.

If DSC is switched off (with the DSC switch on the instrument panel) when using a Terrain Response special program, if the special program is subsequently changed for a different program, DSC is automatically switched back on.

The stability control uses different threshold values for the selected program to automatically reduce DSC intervention, removing the requirement for the driver to disable the DSC system in order to reduce engine intervention which is sometimes induced in extreme off-road conditions. In extreme sand conditions, there may be an

additional benefit of disabling the DSC function using the DSC switch on the instrument panel in addition to selecting the sand program.

HDC is automatically switched on or off and target speeds are adjusted in response to the Terrain Response program selected. The responsiveness of the HDC function is also increased where required.

INCORRECT PROGRAM USAGE

Selection of an inappropriate program is discouraged in the following ways:

- The active program icon is continually displayed in the instrument cluster message center
- The Terrain Response control module 'locks' out certain functions in some programs, for example:
  - adaptive speed control or speed control are only available with the 'special programs off' or 'grass/gravel/snow program' selected,
  - transmission 'Sport' mode is deactivated in all special programs.
- In any special program, except the grass/gravel/snow program, when the ignition has been in the off position, continually for more than six hours, the Terrain Response system defaults to the Special Programs off. When in the grass/gravel/snow program, the Terrain Response system will never default to the Special Programs off. This is to allow for drivers in cold climates where continuous use of the grass/gravel/snow program would be beneficial.
- The rock crawl program is only available with the transfer box in low range.

Selection of an inappropriate program for the terrain conditions will not endanger the driver or cause immediate damage to the vehicle. Although, continued use of an inappropriate program may reduce the life of some components. The driver may notice reduced vehicle

response, with the engine and transmission being less responsive than in the special programs off. Also, in some programs, HDC will remain on, signified by illumination of the HDC indicator in the instrument cluster. The driver may also notice torque 'wind-up' in the center and rear differentials causing a 'braking' effect when the vehicle is manoeuvred in some special programs.

The use of the special programs in the Terrain Response system is monitored by the Terrain Response control module which records the mileage and time the vehicle has operated in a specific program in high and low range. This information can be retrieved using an approved Land Rover diagnostic system and used by the dealer technician to check customer concerns, e.g. high fuel consumption which may be due to continued use of a certain program.

DRIVER INFORMATION

The instrument cluster contains a message center which displays vehicle information to the driver. The message center contains the Terrain Response program icons which display the currently selected program. If no symbol is displayed, no special program is selected and the system is in special programs off.

Any required changes to the subsystems are also passed to the driver in the form of indicator illumination in the instrument cluster or appropriate messages in the message center, HDC off or air suspension height change for example.

In certain operating conditions, the Terrain Response system also displays advice or warning messages to ensure the driver is using the vehicle to its full potential, e.g.,

- Steering angle is displayed in the message center to avoid driving in deep ruts with steering lock applied
- gear information is displayed to recommend a gear for slippery conditions

- if the system automatically provided off road ride height, but the driver subsequently lowers the vehicle to normal height, then the system may advise that this will cause a risk of grounding.

The messages which can be displayed in the instrument cluster message center are detailed in the Information and Message Center section.
For additional information, refer to: Information and Message Center (413-08, Description and Operation).

DIAGNOSTICS

The Terrain Response control module stores information on detected Terrain Response faults and CAN errors which can be interrogated using an approved Land Rover diagnostic system. The Terrain Response sub-systems and the instrument cluster also store fault information relating to CAN errors from the Terrain Response control module.

The control module also stores the miles traveled and time elapsed in high range for the individual programs and in low range for use of all programs which can also be retrieved using an Land Rover approved diagnostic system. This information aids diagnosis of the Terrain Response system and also provides an indication of Terrain Response system abuse by the driver which can lead to premature component failure.

TERRAIN RESPONSE SYSTEM FAULT DIAGNOSIS

Terrain Response relies on the correct functionality of the five sub-systems. If one of the sub-systems develops a fault, the Terrain Response system will not function, even though the fault is NOT in the Terrain Response system. The Terrain Response control module and control selector should only be investigated if there are no apparent faults in any of the sub-systems. If a fault in

a sub-system is subsequently corrected, the Terrain Response system will function normally after an ignition on and off cycle.

Terrain Response Sub-System Faults

If a fault occurs in a sub-system, the driver is alerted by the illumination of a warning indicator and/or an appropriate message for that sub-system in the instrument cluster message center. There will be no warning of a Terrain Response system fault.

When a sub-system fault is present and the driver attempts to select a different Terrain Response program using the control selector or at the next ignition on cycle, a message 'SYSTEM FAULT SPECIAL PROGRAMS NOT AVAILABLE' will appear in the message center. **This implies that the Terrain Response system has a fault, but only because a sub-system fault is preventing its operation.** This message will be displayed for 5 seconds per ignition cycle, but is repeated if a further selection is made by the driver using the Terrain Response control selector or at the next ignition on cycle.

NOTE:

The message 'SYSTEM FAULT SPECIAL PROGRAMS NOT AVAILABLE' can also be generated by a fault in the Terrain Response control selector or control module. See following section for details of rotary control or control module faults.

It is not possible for the Terrain Response control module to cause any fault behavior (warning indicator illumination or message generation) in any of the five sub-systems. Illumination of a sub-system warning indicator and/or a sub-system related message will never be associated with a Terrain Response control module or Terrain Response system fault.

The sub-system control modules can detect a fault with the CAN bus signal from the Terrain Response control module. If a fault in the Terrain Response system is detected, the sub-system control modules will operate in the 'special programs off' setting. The sub-system control modules will record a fault code for a failure of the Terrain Response CAN bus signal. These faults can be retrieved using an approved Land Rover diagnostic system and will provide useful information to indicate investigation of the Terrain Response control module or the CAN bus network.

Terrain Response Control Selector or Control Module Fault

If a fault occurs in the Terrain Response control selector, all control icon amber LED's will be turned off (background illumination will remain on) and selection of the control is ignored. The instrument cluster message center will display a message 'SYSTEM FAULT SPECIAL PROGRAMS NOT AVAILABLE' when the fault occurs, if the fault is present and the driver attempts to select a special program (if the control module is able to do this) or at the next ignition on cycle.

If a failure of a control icon amber LED occurs, the Terrain Response system will still function. Any selected special program will default to 'special programs off' at every ignition on cycle, with the exception of the grass/gravel/snow program.

The Terrain Response control selector and the control module are an integral unit. If a fault occurs in either component, the whole unit will require replacement. **BEFORE REPLACING THE TERRAIN RESPONSE CONTROL MODULE, ENSURE THAT THE FAULT IS NOT IN ANY OF THE SUB-SYSTEM MODULES.**

CAN Bus Faults

If a CAN bus fault exists and prevents Terrain Response system operation, all of the Terrain Response control icon LED's will be illuminated and the control selection ignored.

If the instrument cluster does not receive a Terrain Response system CAN bus message from the Terrain Response Control module, the message 'SYSTEM FAULT SPECIAL PROGRAMS NOT AVAILABLE' will be displayed when the fault occurs and will be repeated at every ignition on cycle.

User Error

The following incorrect usage of the system may be misinterpreted as a system fault:

- Engine not running - Program changes and driver advisory messages are only available with the engine running
- Rock crawl program selected but transfer box in high range
- Special program change attempted with DSC or ABS active (this includes ABS cycling which is operational when HDC is being used on slippery or loose surfaces).
- Special program change attempted with overheat condition present on center or rear differential.

2012.0 RANGE ROVER (LM), 205-00

DRIVELINE SYSTEM – GENERAL INFORMATION

DIAGNOSIS AND TESTING

PRINCIPLE OF OPERATION

For a detailed description of the driveline system and operation, refer to the relevant Description and Operation section in the workshop manual. REFER to:

Driveshaft (205-01 Driveshaft, Description and Operation),
Universal Joints (205-01 Driveshaft, Description and Operation),
Rear Drive Axle and Differential (205-02 Rear Drive Axle/Differential, Description and Operation),
Front Drive Axle and Differential (205-03 Front Drive Axle/Differential, Description and Operation),
Front Drive Halfshafts (205-04 Front Drive Halfshafts, Description and Operation),
Halfshaft Joint (205-04 Front Drive Halfshafts, Description and Operation),
Rear Drive Halfshafts (205-05 Rear Drive Halfshafts, Description and Operation).

INSPECTION AND VERIFICATION

CAUTION:

Diagnosis by substitution from a donor vehicle is **NOT** acceptable. Substitution of control modules does not guarantee confirmation of a fault, and may also cause additional faults in the vehicle being tested and/or the donor vehicle.

NOTE:

Check and rectify basic faults before beginning diagnostic routines involving pinpoint tests.

1. Verify the customer concern.

- If a road test is necessary make sure the vehicle is safe to do so.

2. Visually inspect for obvious signs of mechanical damage.

Visual Inspection

MECHANICAL
▪ Wheel rim and tire damage or runout
▪ Check all the driveshafts and halfshafts for damage including dents, cracks and excessive runout
▪ Check all the CV joint gaiters for splits, damage and security
▪ Check all the driveshafts and halfshafts for correct alignment
▪ Check the driveshaft mounting bolts security
▪ Check all the driveshaft and halfshaft joints for excessive movement
▪ Check the rear driveshaft centre support bearing for security, damage and excessive wear
▪ Check the front and rear differential mounting bolts and bushes for wear, damage and security
▪ Check the front and rear differentials for oil leaks

3. If an obvious cause for an observed or reported concern is found, correct the cause (if possible) before proceeding to the next step.

4. If the cause is not visually evident, verify the symptom and refer to the Symptom Chart, alternatively check for Diagnostic Trouble Codes (DTCs) and refer to the DTC Index.

SYMPTOM CHART

SYMPTOM	POSSIBLE CAUSES	ACTION
Vibration through the vehicle body at a specified speed	▪ Road wheel imbalance ▪ Driveshaft imbalance	Road test the vehicle. If the vibration is only at a specified speed, balance the road wheels. Test for normal operation. Disconnect the rear driveshaft. Check CV and universal joints for smooth and full movement. Disconnect the front driveshaft. Check CV joints for smooth and full movement. If any joints are faulty, replace the driveshaft. Test for normal operation.
Vibration through the vehicle body at all speeds	▪ Misalignment of the rear driveshaft ▪ Bent or misaligned stub axle	Road test the vehicle. Check the rear driveshaft for correct alignment through the centre support bearing. Rectify as necessary. Test for normal operation. Check for a damaged or bent stub axle. Rectify as necessary.
Rumbling noise from the rear of the vehicle varying at different vehicle speed and load	▪ Rear differential bearings worn ▪ Rear wheel bearings worn ▪ Rear driveshaft centre support bearing worn	Using a suitable listening device (e.g. stethoscope) listen to the rear differential pinion bearings and output bearings, the rear wheel bearings and the rear driveshaft centre bearing. Rectify as necessary. Test for normal operation.

SYMPTOM	POSSIBLE CAUSES	ACTION
Rumbling noise from the front of the vehicle varying at different vehicle speed and load	▪ Front differential bearings worn ▪ Front wheel bearings worn	Using a suitable listening device (e.g. stethoscope) listen to the front differential pinion bearings and output bearings and the front wheel bearings. Rectify as necessary. Test for normal operation.
Whining noise from the rear of the vehicle during acceleration and overrun conditions	▪ Rear differential gears worn or damaged	Check and top up the rear differential oil level if necessary. Using a suitable listening device (e.g. stethoscope) listen to the rear differential. Replace the rear differential unit if there is excessive gear noise.
Whining noise from the front of the vehicle during acceleration and overrun conditions	▪ Front differential gears worn or damaged	Check and top up the front differential oil level if necessary. Using a suitable listening device (e.g. stethoscope) listen to the front differential. Replace the front differential unit if there is excessive gear noise.
Knocking, clicking or clunking noise from rear of vehicle during acceleration and overrun conditions	▪ Rear driveshaft joint fixings insecure ▪ Rear driveshaft joints worn or damaged ▪ Rear halfshaft joints or splined shaft worn or damaged ▪ Rear differential internal components worn or damaged	Disconnect the rear driveshaft. Check joint mounting bolt holes for elongation. Check the joints. Disconnect the rear halfshafts. Check the shaft splines for wear or damage. Check the CV joints. Rectify as necessary. With the rear driveshaft and halfshafts disconnected, check the rear differential for tight spots or excessive play. Rectify as necessary.
Knocking, clicking or clunking noise from front of vehicle during acceleration and	▪ Front driveshaft CV joints worn or damaged ▪ Front halfshaft joints or splined	Disconnect the front driveshaft. Check joint mounting bolt holes for elongation. Check the joints. Disconnect the front halfshafts. Check the shaft splines for wear or damage. Check the CV joints. Rectify as necessary. With the front

SYMPTOM	POSSIBLE CAUSES	ACTION
overrun conditions	shaft worn or damaged ▪ Front differential internal components worn or damaged	driveshaft and halfshafts disconnected check the front differential for tight spots or excessive play. Rectify as necessary.

DTC INDEX

For a list of Diagnostic Trouble Codes (DTCs) that could be logged on this vehicle, please refer to Section 100-00.

DRIVESHAFT

SPECIFICATIONS

Front Drive (Propeller) Shaft

Item	Specification
Type	One piece, variable length steel tube.
Constant velocity joints	Plunging type, installed at front and rear.

Rear Drive (Propeller) Shaft

Item	Specification
Type	Two piece, variable length steel tube with isolated centre bearing and swaged front section to provide controlled collapse of the shaft during a crash.
Constant velocity joints	Plunging constant velocity joints are positioned at the front and rear of the shaft with a, fixed Hookes type universal joint at the centre.

Torque Specifications

DESCRIPTION	NM	LB-FT
*** Front driveshaft to front axle drive flange Torx bolts:**		
Stage 1	45	33
Stage 2	Further 90°	Further 90°

DESCRIPTION	NM	LB-FT
*** Front driveshaft to transfer case drive flange Torx bolts:**		
Stage 1	45	33
Stage 2	Further 90°	Further 90°
*** Rear driveshaft to rear axle drive flange Torx bolts**		
Stage 1	42	31
Stage 2	Further 45°	Further 45°
*** Rear driveshaft to transfer case drive flange Torx bolts**		
Stage 1	42	31
Stage 2	Further 45°	Further 45°
Rear driveshaft center bearing bolts	21	15
Fuel tank heat shield bolts	5	4
Fuel tank heat shield nuts	3	2

*** New 'Patched' Torx bolts must be installed**

2012.0 RANGE ROVER (LM), 205-01

DRIVESHAFT

DESCRIPTION AND OPERATION

DRIVESHAFT – COMPONENT LOCATION

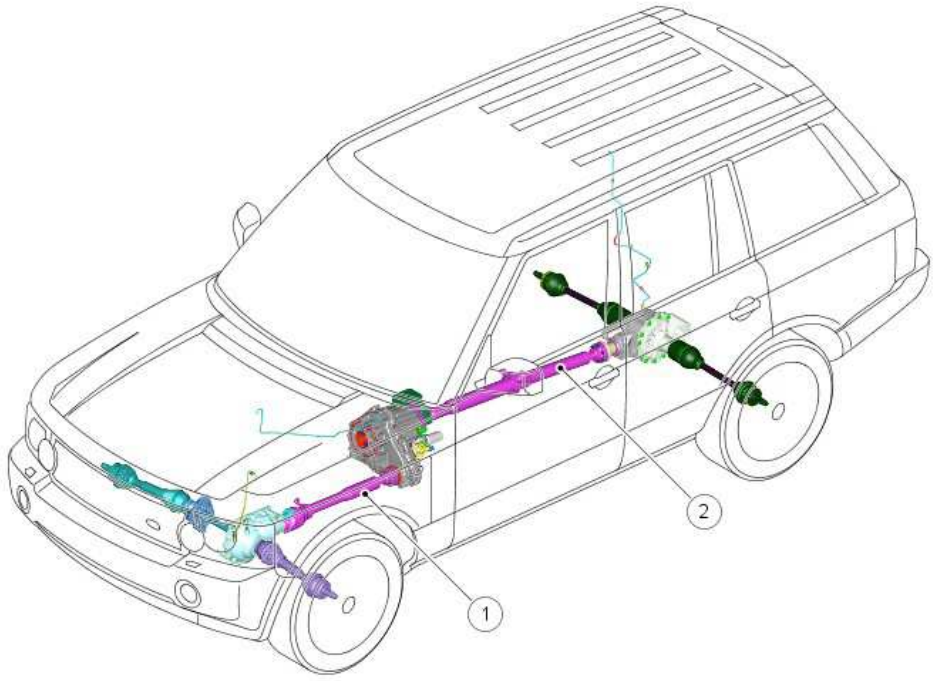

E59392

ITEM	DESCRIPTION
1	Front driveshaft
2	Rear driveshaft assembly

ITEM	DESCRIPTION

GENERAL

Drive shafts are used to transmit drive from the transfer box to the front and rear differentials.

The front drive shaft is a 1-piece unit, connected to the transfer box and front differential unit via Constant Velocity (CV) joints.

The rear drive shaft is a 2-piece unit, supported on a central bearing due to its increased length. The rear drive shaft is connected to the transfer box and the rear differential via CV joints. These joints allow for angular deviations of the drive shaft due to acceleration and braking.

The front and rear drive shafts are not serviceable items and a failure will require the replacement of the complete drive shaft assembly.

FRONT DRIVESHAFT

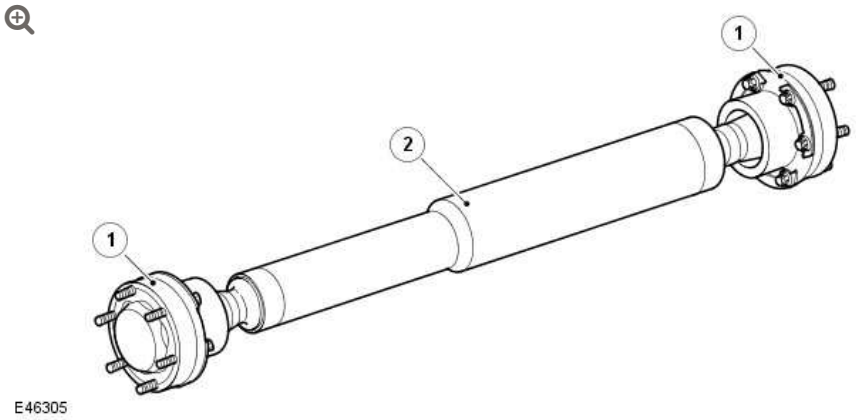

ITEM	DESCRIPTION
1	CV joint
2	Front drive shaft

The front drive shaft is constructed from 1.7 mm wall tubular steel. A CV joint is attached to each end of the drive shaft (see 'Halfshaft Joint' section for more information on CV joints). The shaft has an overall nominal length of 681 mm.

Each CV joint has 6 holes, which allow for attachment to the input flange of the front differential and the front output flange of the transfer box. The CV joints are secured to the front differential and transfer box with 6 Torx head adhesive retained bolts.

Three compression link washers are fitted under each pair of bolts. The washers are required to prevent compression of the CV joints attachment flange.

A shroud is pressed over the CV joint. The shroud seals to the joint body using an internal gasket and to the front output flange of the transfer box using an end cap and internal gasket. This prevents the ingress of dirt and moisture. The CV joints allow for movement of the drive shaft caused by small movements in the transmission and transfer box mountings.

REAR DRIVESHAFT ASSEMBLY

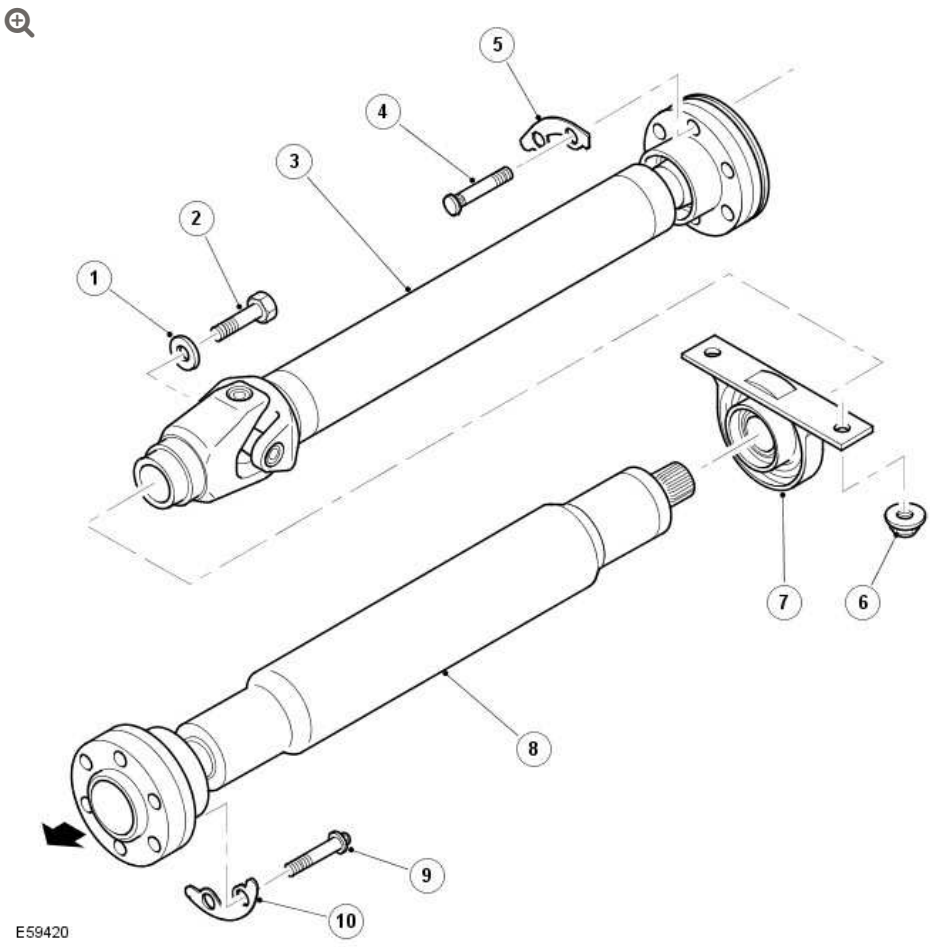

ITEM	DESCRIPTION
1	Washer
2	Bolt
3	Driveshaft - Front
4	Bolt M12 (6 off)
5	Shim (3 off)
6	Nut (2 off)
7	Shaft bearing assembly
8	Driveshaft - Rear
9	Bolt M12 (6 off)
10	Shim (3 off)

The rear driveshaft comprises front and rear shaft assemblies and a centrally mounted shaft bearing. The rear driveshaft has an overall length of 1282 mm.

FRONT SHAFT ASSEMBLY

The front shaft assembly incorporates a crash feature within the tube, which controls the collapse of the drive shaft during a crash.

The front shaft assembly comprises a CV joint at the front and a splined shaft at the rear. The front shaft comprises a tube with welded, splined shafts at each end.

The forward splined shaft accepts the CV joint, which is secured with a circlip. The CV joint is packed with grease and sealed on both sides with metal shrouds to prevent the ingress of dirt and moisture. The CV joint (transfer box end) has 6 radial holes, which provide for the attachment to the transfer box rear output flange. The joint is secured to the output flange with 6 bolts, which screw into threaded holes in the flange. Three compression link washers are fitted under each pair of bolts. The CV joint is not a serviceable component and a failure would require replacement of the rear driveshaft assembly. The rear splined shaft mates with splines in the rear shaft universal joint and is pressed in and fixed with Locktite. A threaded hole is provided in the splined shaft to secure the front and rear driveshaft sections together. A machined surface on the shaft accepts the shaft bearing, which is a press fit.

SHAFT BEARING ASSEMBLY

The shaft bearing assembly comprises a pressed steel housing, a rubber bush and a ball bearing. The rubber bush is bonded into the housing. An internal metal ring, bonded to the bush, allows for the bearing to be press fitted into it. The rubber bush allows for small deviations in alignment and also absorbs vibrational forces. The shaft bearing assembly is located on studs, which are integral with the body, and secured with flanged nuts.

REAR SHAFT ASSEMBLY

The rear shaft assembly comprises a universal joint at the front and a CV joint at the rear. The rear shaft comprises a tube with the welded universal joint at one end and a welded splined shaft at the opposite end.

The opposite end of the universal joint has a splined bore, which mates with the splined shaft on the rear of the front shaft assembly. A bolt and washer is fitted through the splined bore and screws into the splined shaft on the front shaft assembly, securing the front and rear shaft assemblies together.

The rear CV joint (final drive end) has 6 radial holes, which provide for the attachment to the rear differential input flange. The joint is secured to the input flange with 6 torx bolts, which screw into threaded holes in the flange. Three compression link washers are fitted under each pair of bolts. The rear splined shaft mates with splines in the rear shaft CV joint hub and is pressed in and fixed with Locktite.

2012.0 RANGE ROVER (LM), 205-01

DRIVESHAFT

DIAGNOSIS AND TESTING

For additional information.

REFER to: Driveline System (205-00, Diagnosis and Testing).

DRIVESHAFT

FRONT DRIVESHAFT – V8 5.0L PETROL/V8 S/C 5.0L PETROL (G1225388)

REMOVAL AND INSTALLATION

47.15.02	DRIVESHAFT – FRONT – RENEW	5000 CC, AJ V8	1.6	USED WITHINS	+

REMOVAL

NOTES:

- A small amount of oil may weep from the driveshaft joints during storage. The loss of this oil will not affect the operation or durability of the joint.
- Some variation in the illustrations may occur, but the essential information is always correct.

1. Disconnect the battery ground cable.
   For additional information, refer to: Specifications (414-00, Specifications).

2. **WARNING:**

> Do not work on or under a vehicle supported only by a jack. Always support the vehicle on safety stands.

Raise and support the vehicle.

---

3. Remove the transmission support crossmember.
For additional information, refer to: Transmission Support Crossmember - 5.0L (502-02, Removal and Installation).

---

4. **CAUTIONS:**

> - Mark the position of the driveshaft flange in relation to the drive pinion flange.
> - To avoid damage to the joint or gaiter, do not allow the driveshaft to hang.

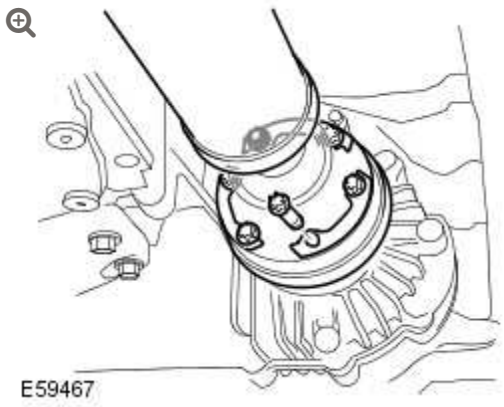

Release the driveshaft from the transfer case drive flange.

- Remove the 6 Torx bolts and washers, discard the bolts.

5.

CAUTIONS:

- Mark the position of the driveshaft flange in relation to the drive pinion flange.
- To avoid damage to the joint or gaiter, do not allow the driveshaft to hang.

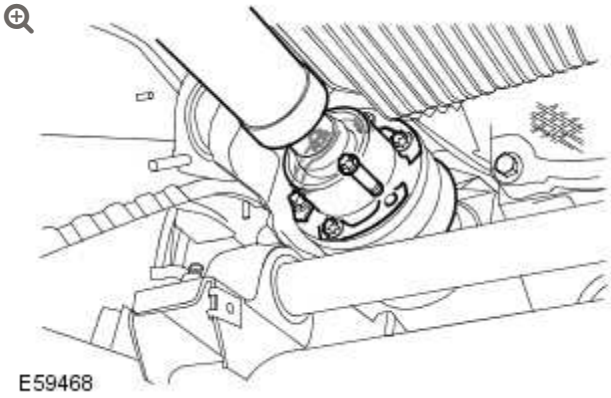

Release the driveshaft from the front axle drive flange.

- Remove the 6 Torx bolts and washers, discard the bolts.

6.

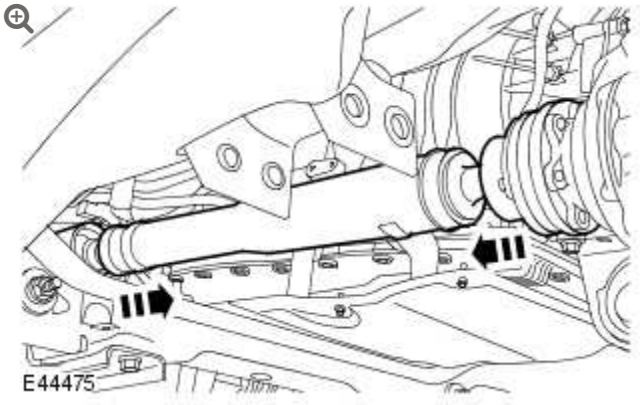

Remove the front driveshaft.

- Compress the joints to disengage the drive flanges.

INSTALLATION

1. **NOTE:**

   A small amount of oil may weep from the driveshaft joints during storage. The loss of this oil will not affect the operation or durability of the joint.

   Install the driveshaft.

   - Clean the components.
   - Compress the joints to engage the drive flanges.

2. Attach the driveshaft to the front axle drive flange.
   - Tighten the new Torx bolts to 45 Nm (33 lb.ft), then a further 90 degrees.

3. Attach the driveshaft to the transfer case drive flange.
   - Tighten the new Torx bolts to 45 Nm (33 lb.ft), then a further 90 degrees.

4. Install the transmission support crossmember.
   For additional information, refer to: Transmission Support Crossmember - 5.0L (502-02, Removal and Installation).

5. Connect the battery ground cable.
   For additional information, refer to: Specifications (414-00, Specifications).

DRIVESHAFT

REAR DRIVESHAFT – V8 5.0L PETROL/V8 S/C 5.0L PETROL (G1225946)

REMOVAL AND INSTALLATION

47.15.03	DRIVESHAFT – REAR – RENEW	5000 CC, AJ V8	1.4	USED WITHINS	+

REMOVAL

NOTE:

A small amount of oil may weep from the driveshaft joints during storage. The loss of this oil will not affect the operation or durability of the joint.

1. Disconnect the battery ground cable.
   For additional information, refer to: Specifications (414-00, Specifications).

2.

WARNING:

Do not work on or under a vehicle supported only by a jack. Always support the vehicle on safety stands.

Raise and support the vehicle.

3. Remove the exhaust system.
   For additional information, refer to: Exhaust System (309-00, Removal and Installation).

4. 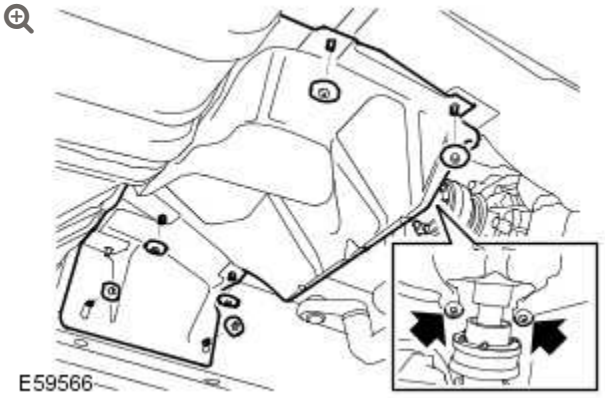

   Remove the center heat shield.

   - Remove the 8 nuts.

5. 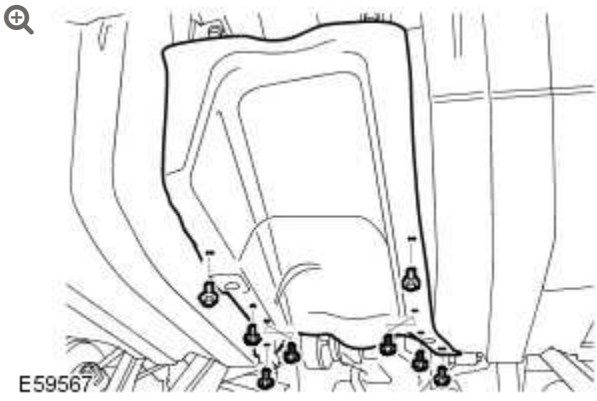

   Remove the fuel tank heat shield.

- Remove the 8 screws.

6. **CAUTIONS:**

- Mark the position of the driveshaft flange in relation to the drive pinion flange.
- To avoid damage to the joint or gaiter, do not allow the driveshaft to hang.

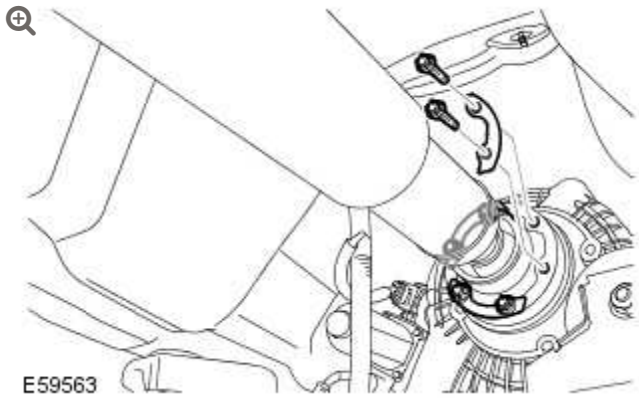

Release the driveshaft from the transfer case drive flange.

- Remove the 6 Torx bolts and washers.

7. **CAUTIONS:**

- Mark the position of the driveshaft flange in relation to the drive pinion flange.
- To avoid damage to the joint or gaiter, do not allow the driveshaft to hang.

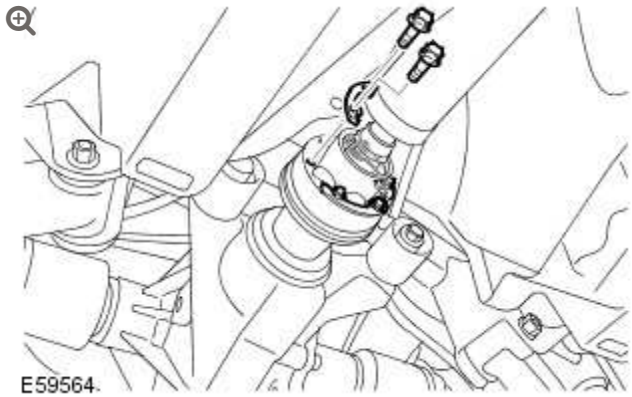

Release the driveshaft from the rear axle drive flange.

- Remove the 6 Torx bolts and washers.

8.

CAUTION:

Note the fitted position of the component prior to removal.

NOTE:

With assistance remove the component.

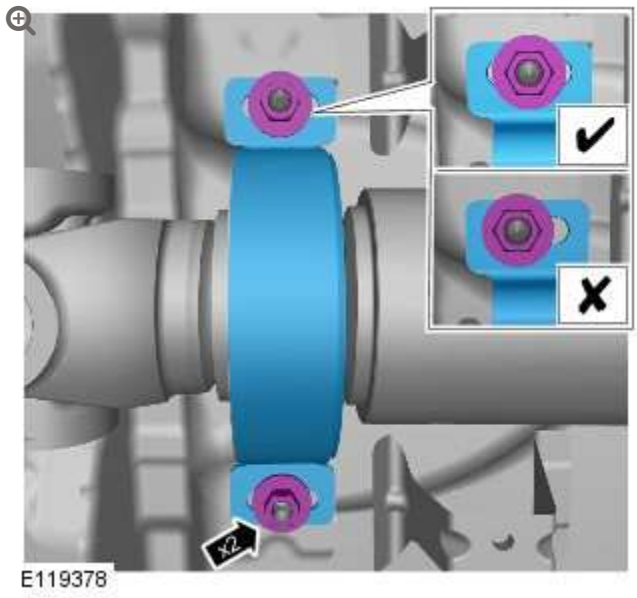

Note the fitted position.

- Remove the 2 nuts.

INSTALLATION

1.

CAUTION:

It is possible to fit the driveshaft incorrectly. The universal joint must be rearward of the center bearing when installed in the vehicle.

NOTE:

A small amount of oil may weep from the driveshaft joints during storage. The loss of this oil will not affect the operation or durability of the joint.

Attach the driveshaft to the rear axle drive flange.

- Clean the component mating faces.

- Tighten the Torx bolts to 44 Nm (32 lb.ft), then a further 45 degrees.

2. **NOTE:**

   A small amount of oil may weep from the driveshaft joints during storage. The loss of this oil will not affect the operation or durability of the joint.

   Attach the driveshaft to the transfer case drive flange.

   - Clean the component mating faces.
   - Tighten the Torx bolts to 44 Nm (32 lb.ft), then a further 45 degrees.

3. **CAUTION:**

   Make sure the center bearing mount is not under tension and central within the slots.

   Attach the driveshaft center bearing mount.

   - Align the center bearing mount.
   - Tighten the nuts to 21 Nm (15 lb.ft).

4. Install the fuel tank heat shield.
   - Tighten the screws.

5. Install the center heat shield.
   - Tighten the nuts.

6.

Install the exhaust system.
For additional information, refer to: Exhaust System (309-00, Removal and Installation).

7. Connect the battery ground cable.
For additional information, refer to: Specifications (414-00, Specifications).

2012.0 RANGE ROVER (LM), 205-01

DRIVESHAFT

DESCRIPTION AND OPERATION

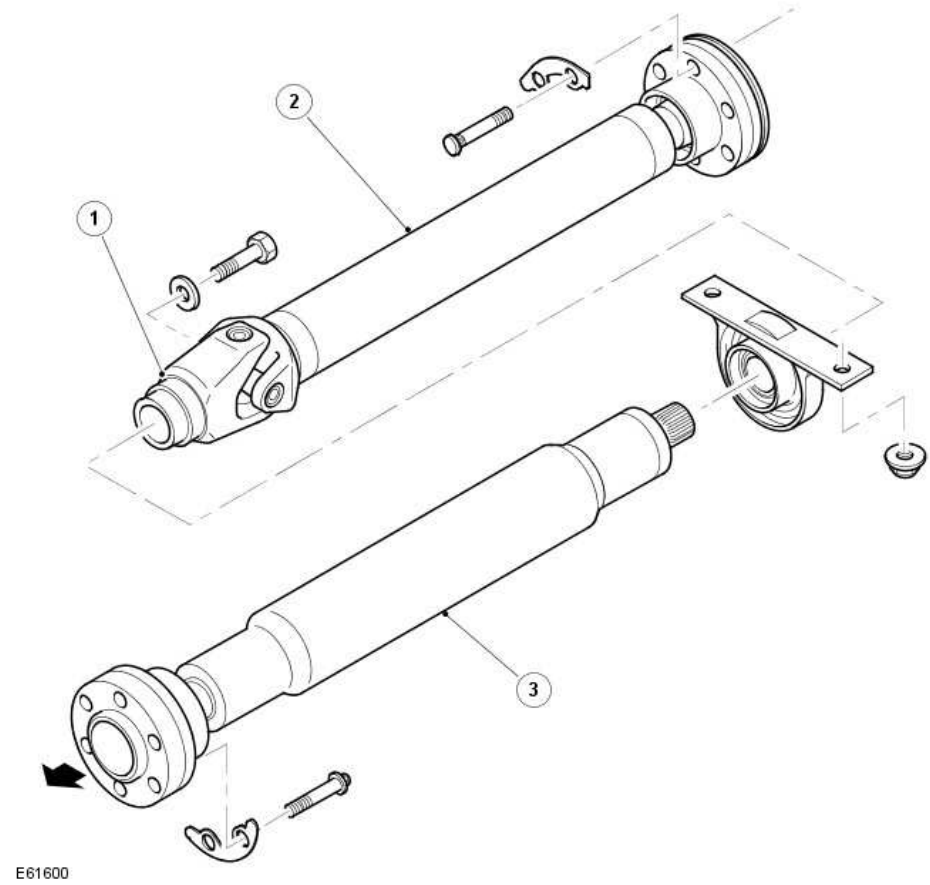

ITEM	DESCRIPTION
1	Universal joint
2	Rear shaft assembly

ITEM	DESCRIPTION
3	Front shaft assembly

The rear driveshaft is a 2-piece unit with a universal joint connecting the rear shaft assembly to the front shaft assembly. This configuration allows for angular deviations of the driveshaft due to acceleration and braking.

The rear shaft assembly comprises a tube with the welded universal joint at the front and a Constant Velocity (CV) joint at the rear. The front shaft assembly comprises a tube with a CV joint at the front and a welded splined shaft at the rear.

The front splined shaft mates with splines in the rear shaft universal joint. A threaded hole is provided in the splined shaft to secure the front and rear shaft assemblies together.

REAR DRIVE AXLE/DIFFERENTIAL

AXLE ASSEMBLY (G1225897)

REMOVAL AND INSTALLATION

51.15.01	DIFFERENTIAL - RENEW	5000 CC, AJ V8	2.9	USED WITHINS	+

SPECIAL TOOL(S)



308-005 (LRT-37-004/2)

Axle oil seal remover



100-012 (LRT-99-004)

Impulse extractor



308-626/1

Installer halfshaft oil seal



308-626/2

Installer/Guide halfshaft oil seal

REMOVAL

CAUTIONS:

- Do not allow halfshafts to hang unsupported at one end or joint damage will occur.
- Do not store or install halfshafts with joints at maximum articulation or damage may occur to the joint.
- Angularly Adjusted Roller (AAR) joints, used at the inboard end of some halfshafts have no internal retaining mechanism and can separate.

1. Disconnect the battery ground cable.
   For additional information, refer to: Specifications (414-00, Specifications).

2. **WARNING:**

   Do not work on or under a vehicle supported only by a jack. Always support the vehicle on safety stands.

   Raise and support the vehicle.

3. Remove both rear wheels and tires.

4. Remove the exhaust system.
   For additional information, refer to: Exhaust System (309-00, Removal and Installation).

5.

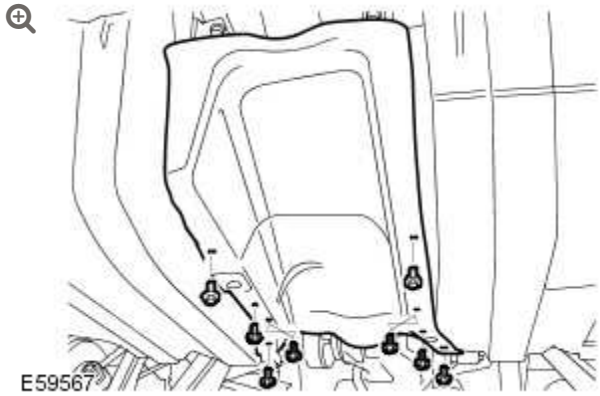

Remove the fuel tank heat shield.

- Remove the 8 screws.

6. Drain the differential fluid.
   For additional information, refer to: Differential Draining and Filling (205-02, General Procedures).

7. **CAUTIONS:**

   - Mark the position of the driveshaft flange in relation to the drive pinion flange.
   - To avoid damage to the joint or gaiter, do not allow the driveshaft to hang.

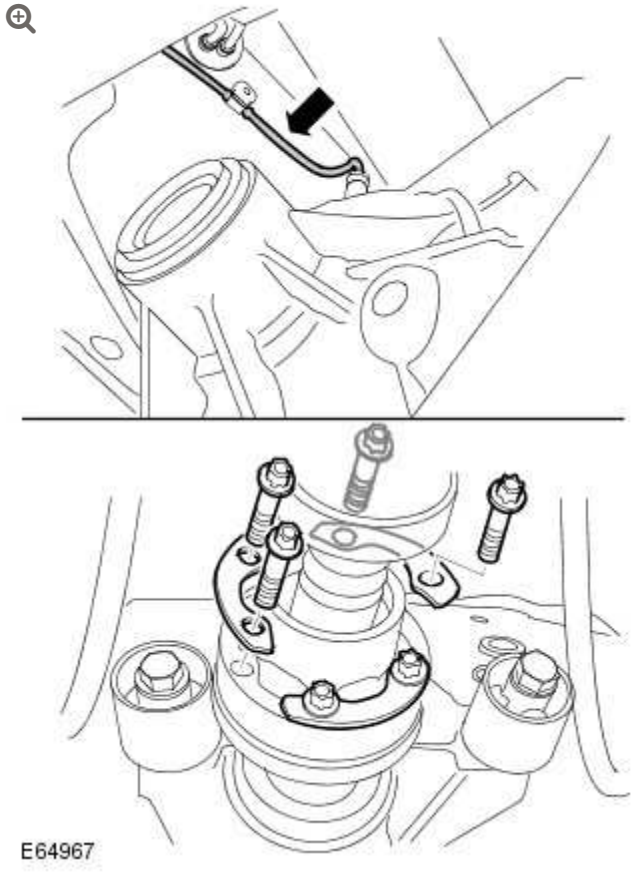

Release the driveshaft from the rear axle drive flange.

- Remove and discard the 6 bolts.
- Remove the 3 washers.

8.

CAUTION:

Make sure that all openings are sealed. Use new blanking caps.

Disconnect the axle case breather line.

9.

NOTE:

Use an additional wrench to prevent the component from rotating.

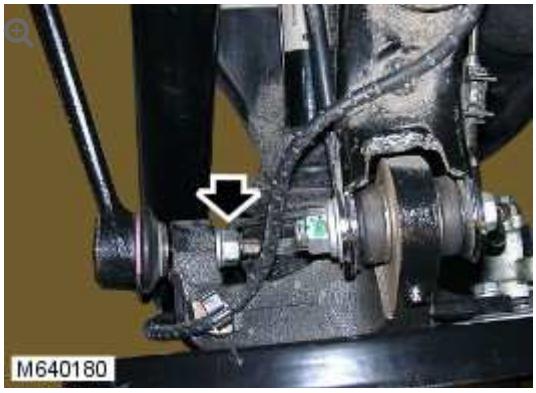

Release the LH tie rod.

- Remove and discard the nut.

10.

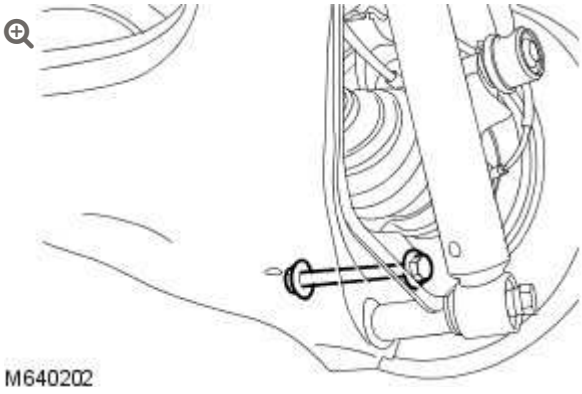

Release the LH lower arm.

- Using a suitable stand, support the lower arm.
- Remove and discard the nut and bolt.

11.

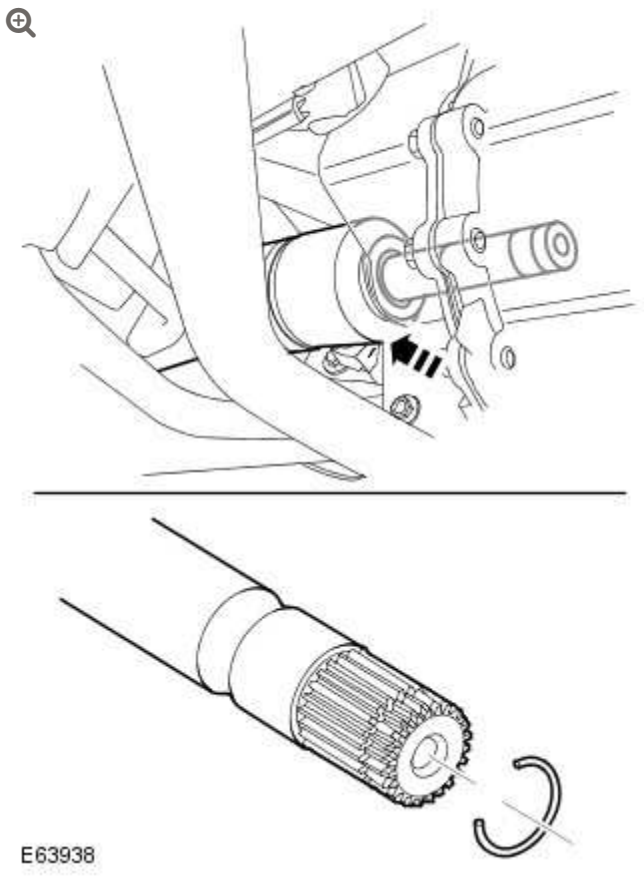

With assistance, release the LH halfshaft.

- Remove and discard the snap ring.

12.

NOTES:

- Use an additional wrench to prevent the component from rotating.
- LH illustration shown, RH is similar.

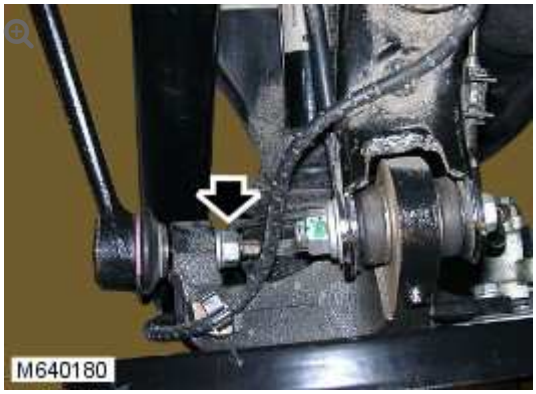

Release the RH tie rod.

- Remove and discard the nut.

13.

NOTE:

LH illustration shown, RH is similar.

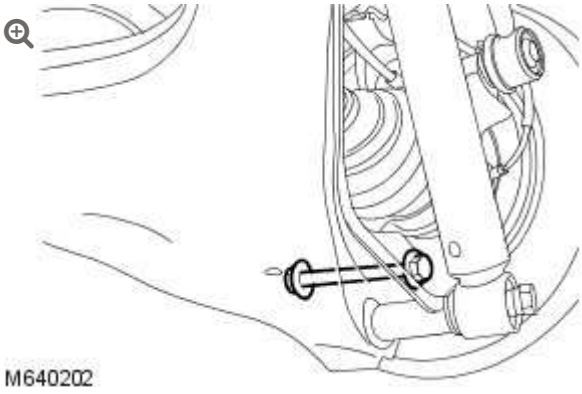

Release the RH lower arm.

- Using a suitable stand, support the lower arm.
- Remove and discard the nut and bolt.

14.

NOTE:

LH illustration shown, RH is similar.

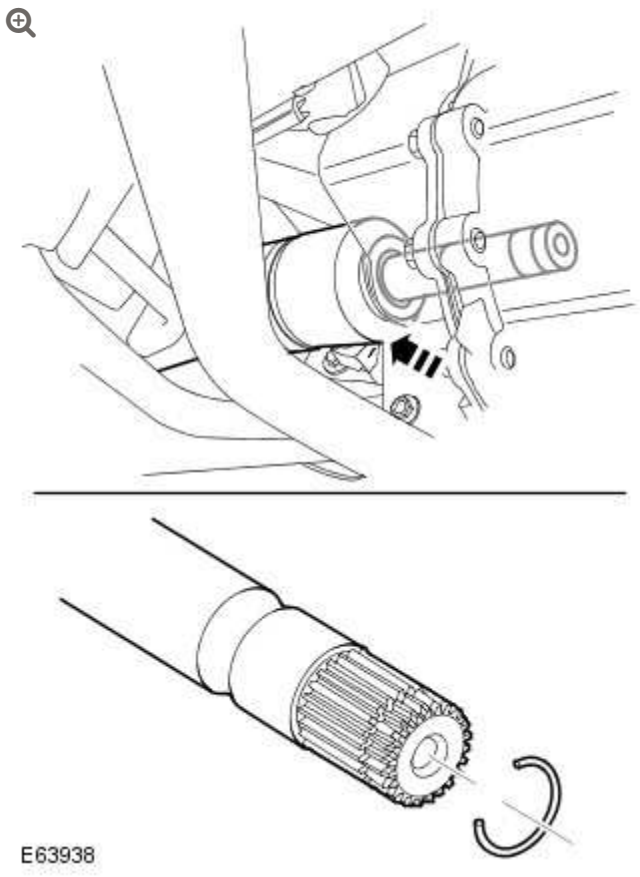

With assistance, release the RH halfshaft.

- Remove and discard the snap ring.

15.

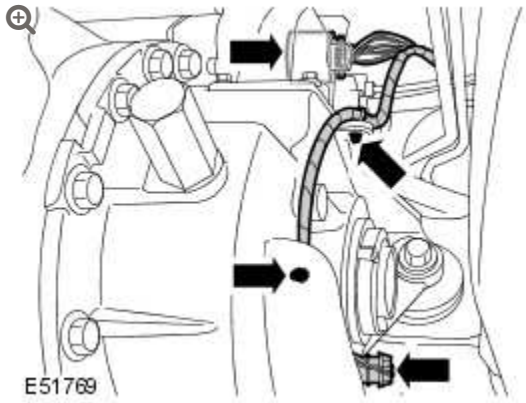

Vehicles with differential locking motor.

- Release the 2 wiring harness clips.
- Disconnect the 2 electrical connectors.

16. **WARNING:**

Secure the component to the transmission jack.

NOTE:

Remove and discard the axle assembly rear nut and bolt.

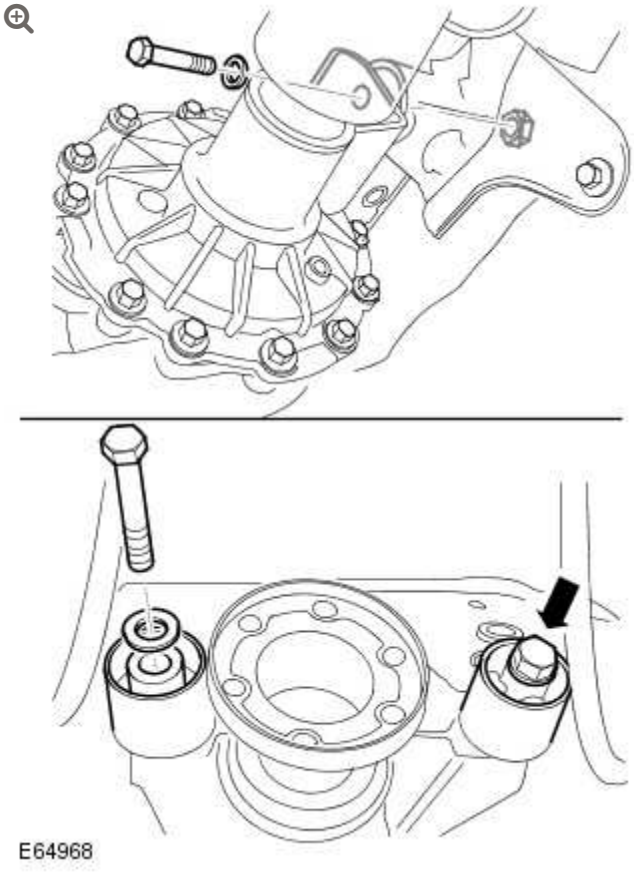

Remove the axle assembly.

- Using a transmission jack, support the axle.
- Remove the axle assembly front bolts.

17. With assistance, remove the axle from the transmission jack.

18. **NOTE:**

LH illustration shown, RH is similar.

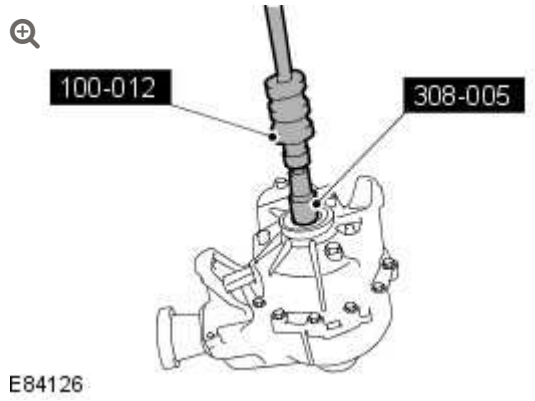

Using the special tools, remove and discard both halfshaft seals.

INSTALLATION

1. **CAUTION:**

The halfshaft seal protector must be left in place until the halfshaft has been installed.

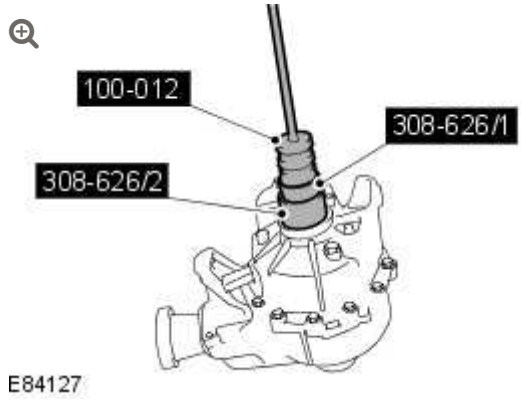

Using the special tools, install new halfshaft seals.

- Clean the component mating faces.

2. With assistance, secure the axle to the transmission jack.

3. **NOTE:**

   Make sure that new nuts and bolts are installed.

   Install the axle assembly.

   - Clean the component mating faces.
   - Tighten the new nut and bolt to 120 Nm (89 lb.ft), then a further 180 degrees.
   - Tighten the bolts to 100 Nm.

4. Vehicles with differential locking motor.
   - Connect the electrical connectors.
   - Secure the wiring harness clips.

5.

CAUTION:

Nuts and bolts must be tightened with the weight of the vehicle on the suspension.

Secure the RH lower arm.

- Install a new nut and bolt and tighten to 250 Nm (184 lb.ft).

6.

NOTE:

Use an additional wrench to prevent the component from rotating.

Secure the RH tie rod.

- Install a new nut and tighten to 165 Nm (121 lb.ft).

7.

CAUTION:

Pull on the halfshaft inboard joint to make sure the clip has fully engaged and retains the halfshaft inboard joint within the axle case.

NOTE:

Do not fully engage the halfshaft until the oil seal protector has been removed.

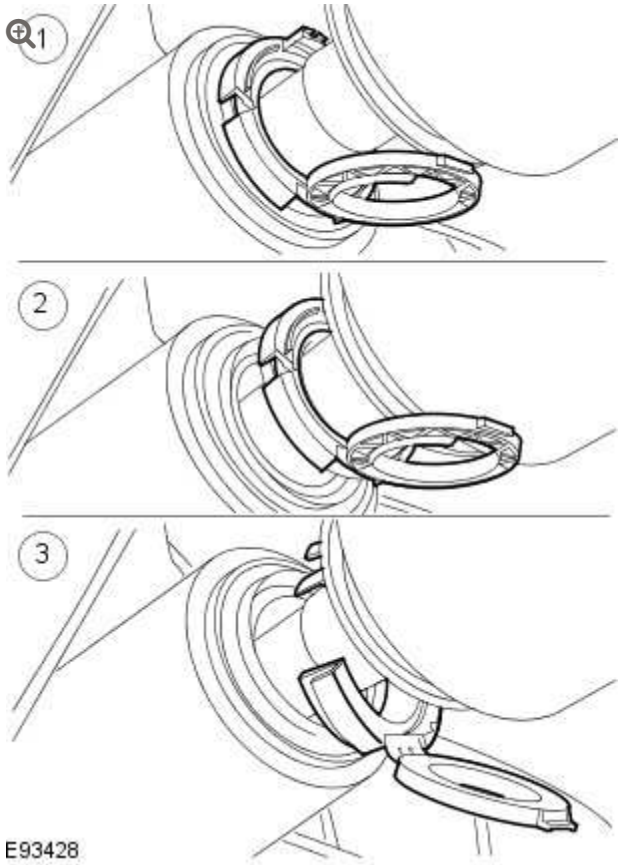

With assistance, secure the LH halfshaft.

- Open the halfshaft seal protector and install the halfshaft.
- Release the halfshaft seal protector from the halfshaft seal.
- Break the halfshaft seal protector in to two pieces and remove the halfshaft seal protector.
- Fully install the halfshaft.

8. Repeat the above procedure for the other side.

9. **CAUTION:**

Nuts and bolts must be tightened with the weight of the vehicle on the suspension.

Secure the LH lower arm.

- Install a new nut and bolt and tighten to 250 Nm (184 lb.ft).

10.

NOTE:

Use an additional wrench to prevent the component from rotating.

Secure the LH tie rod.

- Install a new nut and tighten to 165 Nm (121 lb.ft).

11. Connect the axle case breather line.

12.

NOTE:

Make sure that new bolts are installed.

Secure the driveshaft to the rear axle drive flange.

- Install the washers.
- Stage 1: Tighten the bolts to 45 Nm (33 lb.ft).
- Stage 2: Tighten the bolts a further 45 degrees.

13. Fill the differential with the correct amount of fluid.
For additional information, refer to: Differential Draining and Filling (205-02, General Procedures).

14. Install the fuel tank heat shield.

- Tighten the screws.

15.

Install the exhaust system.
For additional information, refer to: Exhaust System (309-00, Removal and Installation).

16. Install the wheels and tires.
    - Tighten the wheel nuts to 140 Nm (103 lb.ft).

17. Connect the battery ground cable.
    For additional information, refer to: Specifications (414-00, Specifications).

AXLE HOUSING BUSHING - V8 5.0L PETROL/V8 S/C 5.0L PETROL (G1225947)

IN-VEHICLE REPAIR

REMOVAL

1. Disconnect the battery ground cable.
   For additional information, refer to: Specifications (414-00, Specifications).

2. **WARNING:**

   > Do not work on or under a vehicle supported only by a jack. Always support the vehicle on safety stands.

   Raise and support the vehicle.

3. Remove the exhaust system.
   For additional information, refer to: Exhaust System (309-00, Removal and Installation).

4.

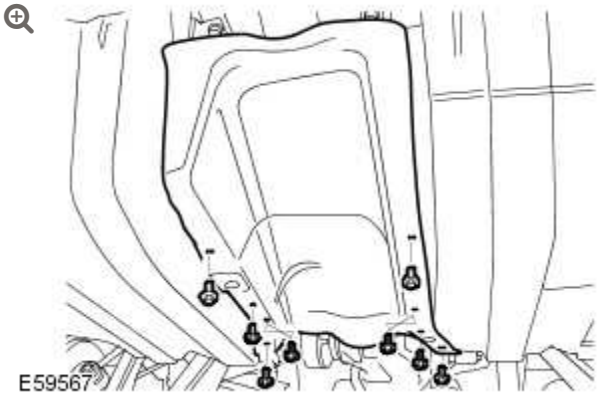

Remove the fuel tank heat shield.

- Remove the 8 screws.

5.

CAUTIONS:

- Mark the position of the driveshaft flange in relation to the drive pinion flange.
- To avoid damage to the joint or gaiter, do not allow the driveshaft to hang.

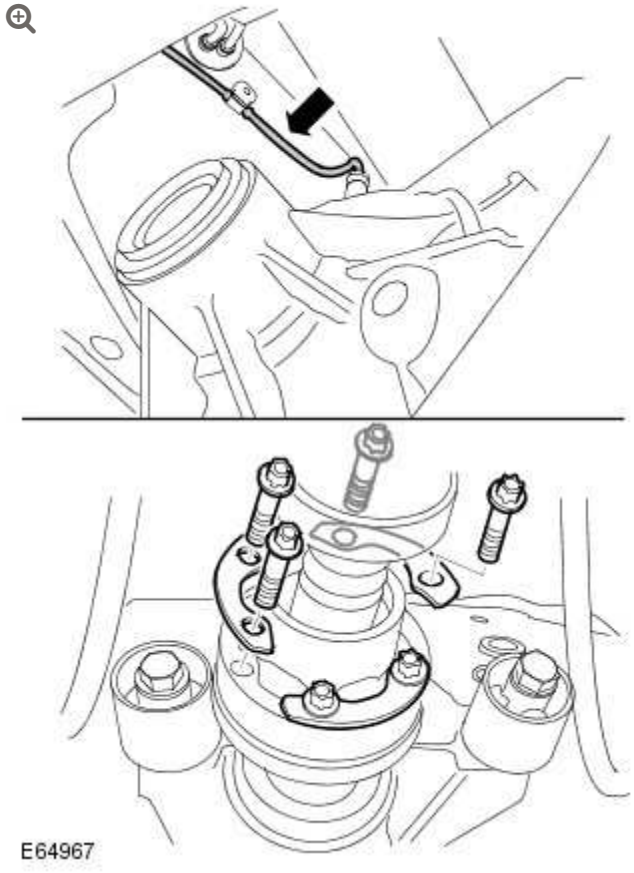

Release the driveshaft from the rear axle drive flange.

- Remove the 6 Torx bolts and washers.

6.

CAUTION:

Before disconnecting or removing the components, ensure the area around the joint faces and connections are clean and dry. Plug open connections to prevent contamination.

Disconnect the axle case breather line.

7.

NOTE:

Allow the axle to rotate until the drive flange hangs down.

Lower the rear axle assembly.

- Using a transmission jack, support the axle.
- Remove and discard the nut and bolt.
- Remove the 2 bolts.

8.

CAUTION:

Note the fitted position of the bush and mark the sub-frame to aid assembly.

NOTE:

Move the axle case rearwards for access.

Using the special tools, remove the rear axle housing front bushing.

INSTALLATION

1.

CAUTIONS:

- Lubricate the new bush with rubber lubricant to aid assembly.
- Align the new bush to the mark on the sub-frame.

Using the special tools, install the rear axle housing front bushing.

- Clean the component mating faces.

2. Install the axle assembly.
   - Clean the component mating faces.
   - Tighten the bolts to 100 Nm (74 lb.ft).
   - Tighten the new nut and bolt to 120 Nm (89 lb.ft), then a further 180 degrees.
3. Connect the axle case breather line.
4. Attach the driveshaft to the rear axle drive flange.
   - Clean the component mating faces.
   - Install the washers.
   - Tighten the Torx bolts to 44 Nm (32 lb.ft), then a further 45 degrees.
5. Install the fuel tank heat shield.
   - Tighten the screws.
6. Install the exhaust system.
   For additional information, refer to: Exhaust System (309-00, Removal and Installation).

7. Install the wheels and tires.
   - Tighten the wheel nuts to 140 Nm (103 lb.ft).

8. Connect the battery ground cable.
   For additional information, refer to: Specifications (414-00, Specifications).

REAR DRIVE AXLE/DIFFERENTIAL

AXLE SHAFT SEAL (G928074)

IN-VEHICLE REPAIR

SPECIAL TOOL(S)



204-506/1 (LRT-60-030/1)

Halfshaft remover/replacer



204-506/5 (LRT-60-030/5)

Retainers - halfshaft remover/replacer



204-506/3 (LRT-60-030/3)

Halfshaft remover/replacer



204-506-01(LRT-60-030/4)

Halfshaft installer adapter



308-005 (LRT-37-004/2)

Axle oil seal remover



100-012 (LRT-99-004)

Impulse extractor



308-626/1

Installer halfshaft oil seal



308-626/2

Installer/Guide halfshaft oil seal

REMOVAL

CAUTIONS:

- Do not allow halfshafts to hang unsupported at one end or joint damage will occur.
- Do not store or install halfshafts with joints at maximum articulation or damage may occur to the joint.
- Angularly Adjusted Roller (AAR) joints, used at the inboard end of some halfshafts have no internal retaining mechanism and can separate.

1. **WARNING:**

> Do not work on or under a vehicle supported only by a jack. Always support the vehicle on safety stands.

Raise and support the vehicle.

2. Remove the rear wheel and tire.

3. **NOTE:**

> Use an additional wrench to prevent the component from rotating.

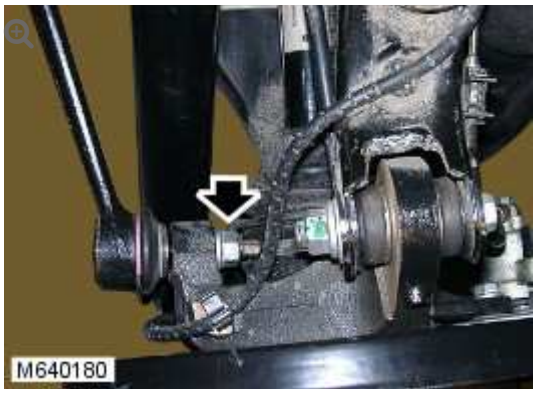

Release the tie rod.

- Remove and discard the nut.

4.

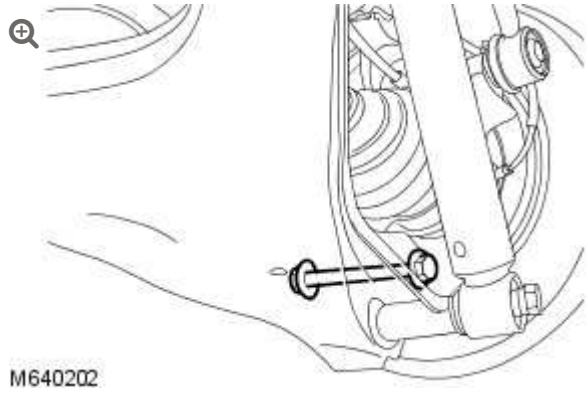

Release the lower arm.

- Using a suitable stand, support the lower arm.
- Remove and discard the nut and bolt.

5.

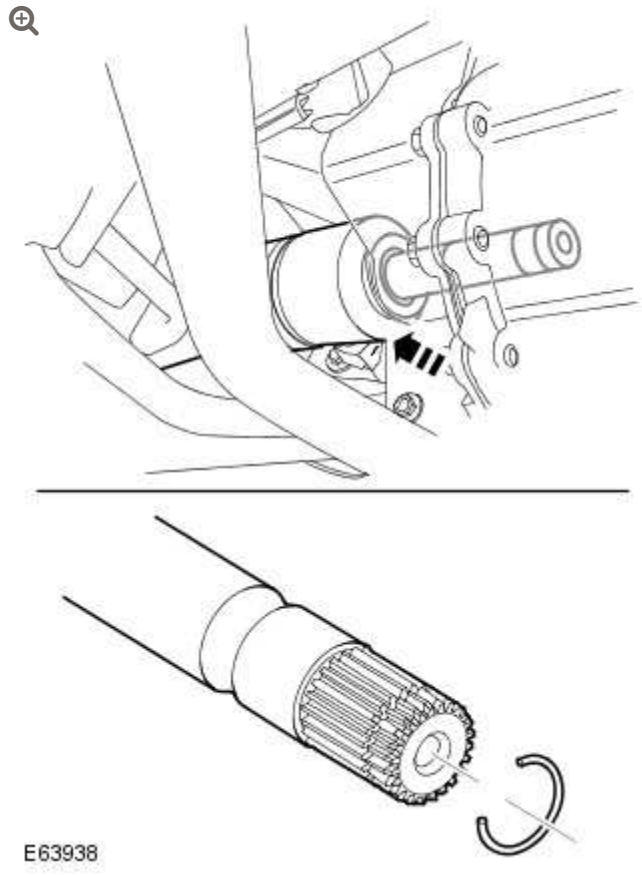

With assistance, release the halfshaft.

- Remove and discard the snap ring.

6.

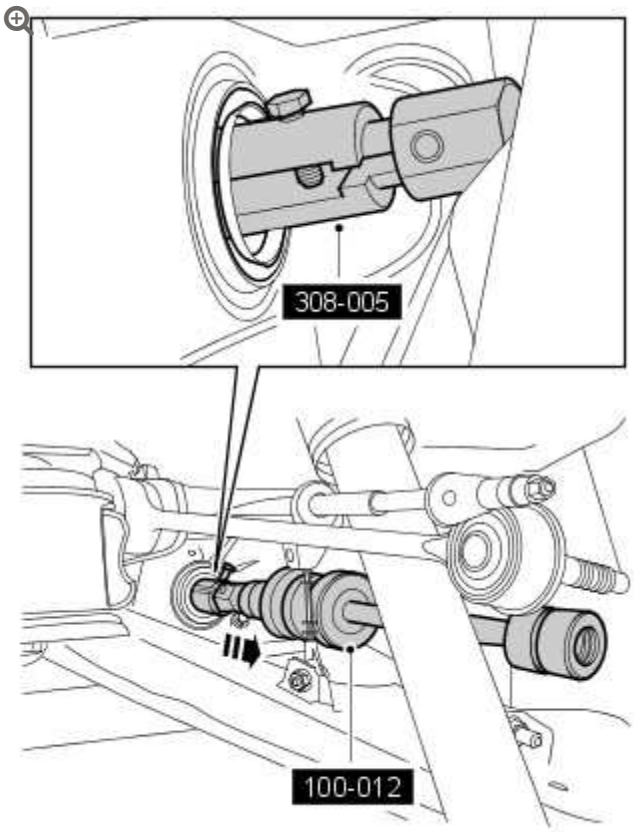

Using the special tools, remove and discard the axle shaft seal.

INSTALLATION

1.

CAUTION:

The axle shaft seal protector must be left in place until the halfshaft has been installed.

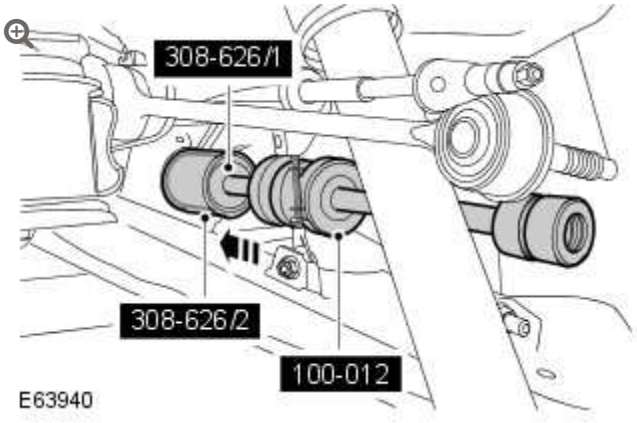

Using the special tools, install a new axle shaft seal.

- Clean the component mating faces.

2.

CAUTION:

Pull on the halfshaft inboard joint to make sure the clip has fully engaged and retains the halfshaft inboard joint within the axle case.

With assistance, secure the halfshaft.

- Clean the component mating faces.
- Install a new snap ring.
- Open the axle shaft seal protector.

3.

NOTES:

- LH illustration shown, RH is similar.
- The axle shaft seal protector is designed to break into two pieces.

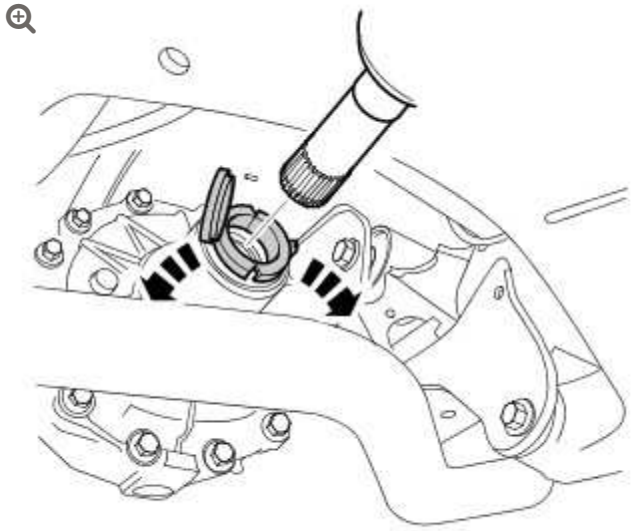

E63941

Remove and discard the axle shaft seal protector.

4.

CAUTION:

Nuts and bolts must be tightened with the weight of the vehicle on the suspension.

Secure the lower arm.

- Install a new nut and bolt and tighten to 250 Nm (184 lb.ft).

5.

NOTE:

Use an additional wrench to prevent the component from rotating.

Secure the tie rod.

- Install a new nut and tighten to 165 Nm (121 lb.ft).

6. Install the wheel and tire.

- Tighten the wheel nuts to 140 Nm (103 lb.ft).

REAR DRIVE AXLE/DIFFERENTIAL

DIFFERENTIAL DRAINING AND FILLING (G899912)

GENERAL PROCEDURES

51.25.02	REAR AXLE - DRAIN AND REFILL	ALL DERIVATIVES	0.2	USED WITHINS

CAUTION:

Do not fill the differential with lubricant up to the filler plug. The filler plug is only used to fill the differential with lubricant, and not to act as a level indicator.

1. **WARNING:**

   Do not work on or under a vehicle supported only by a jack. Always support the vehicle on safety stands.

   Raise and support the vehicle.

2. Remove the differential case fluid filler plug.

- Clean the area around the fluid filler plug.
- Position a container to collect spillage.

3.

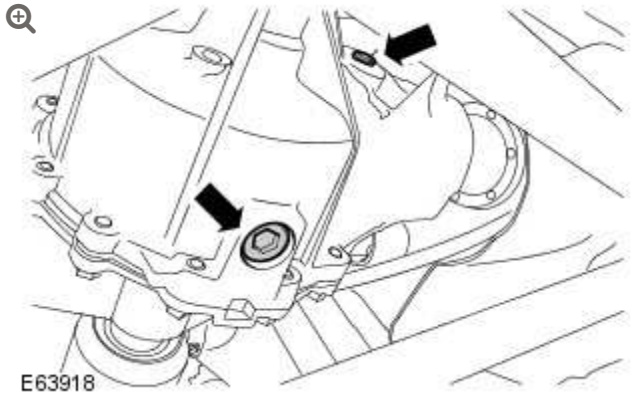

Drain the differential fluid.

- Clean the area around the fluid drain plug.
- Remove the fluid drain plug.

4. Install the differential case fluid drain plug.
   - Clean the component mating faces.
   - Tighten the drain plug to 54 Nm (40 lb.ft).

5.

CAUTION:

Do not fill the differential case with fluid up to the filler plug hole. The filler plug is only used to fill the differential case with fluid, and not to act a level indicator.

Fill the differential with the correct amount of fluid.
For additional information, refer to: Specifications (205-02, Specifications).

6. Install the differential case fluid filler plug.

- Clean the filler plug.
- Tighten the filler plug to 34 Nm (25 lb.ft).

REAR DRIVE AXLE/DIFFERENTIAL

DIFFERENTIAL LOCKING MOTOR (G877133)

IN-VEHICLE REPAIR

51.15.03	MOTOR - DIFFERENTIAL LOCKING - RENEW	ALL DERIVATIVES	0.4	USED WITHINS	+

REMOVAL

1. **WARNING:**

   Do not work on or under a vehicle supported only by a jack. Always support the vehicle on safety stands.

   Raise and support the vehicle.

2.

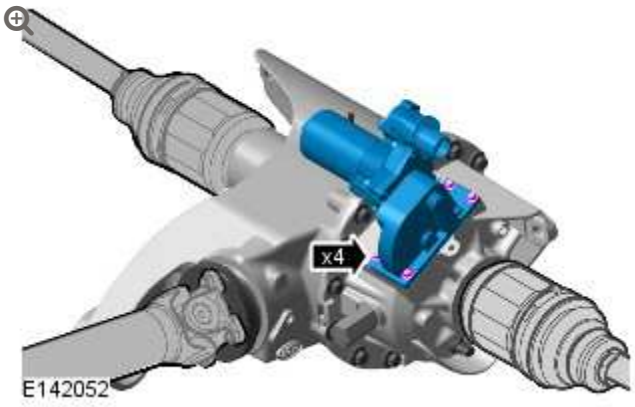

Remove the differential locking motor.

- Disconnect the electrical connector.
- Remove the 4 bolts.

3.

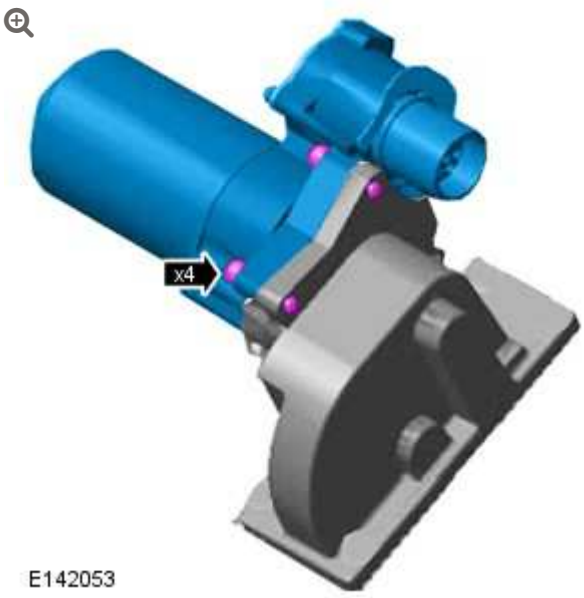

Remove the 4 bolts.

4.



Discard the motor.

5. Check the gear set for damage to the gears.

INSTALLATION

1. Clean the component mating faces.

2.



Install the new motor with new O ring seal.

3.

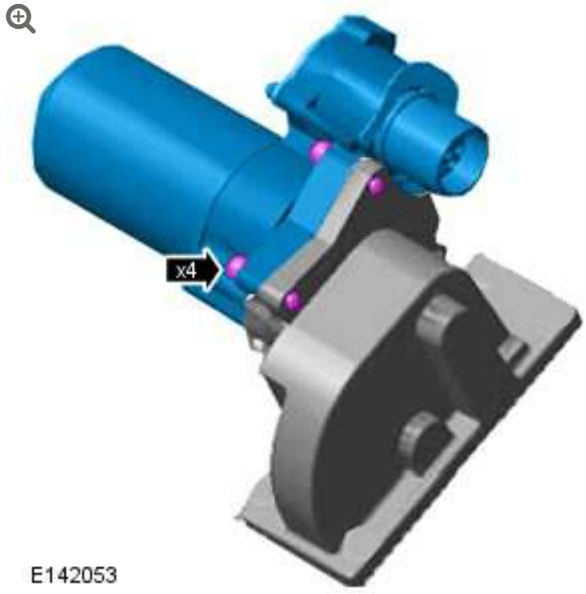

Install the 4 bolts 12 Nm.

4.

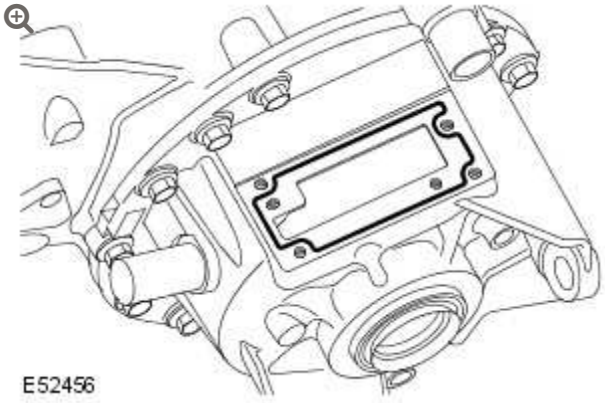

Clean the component mating faces and apply continuous bead of sealant to the motor mating face on the differential.

5.

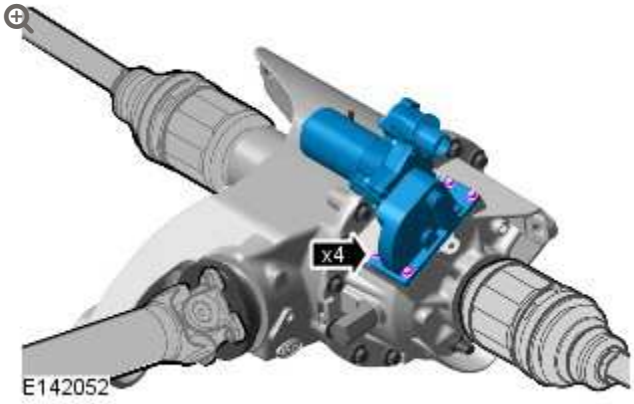

Install the differential locking motor.

- Tighten the bolts to 10 Nm.
- Connect the electrical connector.

6. Using the Land Rover approved diagnostic system, calibrate the new differential locking motor.

REAR DRIVE AXLE/DIFFERENTIAL

DIFFERENTIAL SUPPORT INSULATOR – V8 5.0L PETROL/V8 S/C 5.0L PETROL (G1225616)

REMOVAL AND INSTALLATION

SPECIAL TOOL(S)



LRT-51-022

Remover/installer 205-707

REMOVAL

NOTE:

Some variation in the illustrations may occur, but the essential information is always correct.

1. Disconnect the battery ground cable.
   For additional information, refer to: Specifications (414-00, Specifications).

2. **WARNING:**

   Make sure to support the vehicle with axle stands.

   Raise and support the vehicle.

3. Remove the exhaust system.
   For additional information, refer to: Exhaust System (309-00, Removal and Installation).

4. 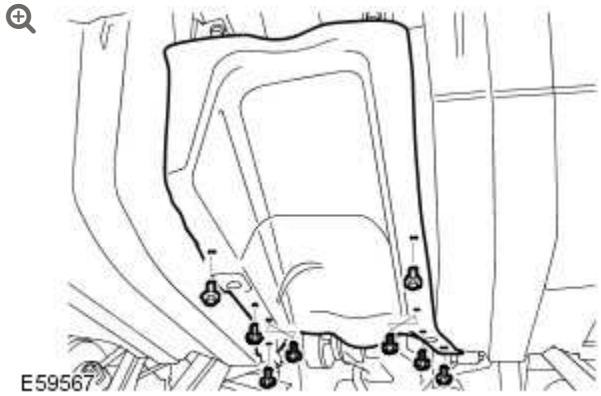

   Remove the fuel tank heat shield.

   - Remove the 8 screws.

5.

CAUTIONS:

- Mark the position of the driveshaft flange in relation to the drive pinion flange.
- To avoid damage to the joint or gaiter, do not allow the driveshaft to hang.

Release the driveshaft from the rear axle drive flange.

- Remove the 6 bolts and washers.

6.

CAUTION:

Before disconnecting or removing the components, ensure the area around the joint faces and connections are clean and dry. Plug open connections to prevent contamination.

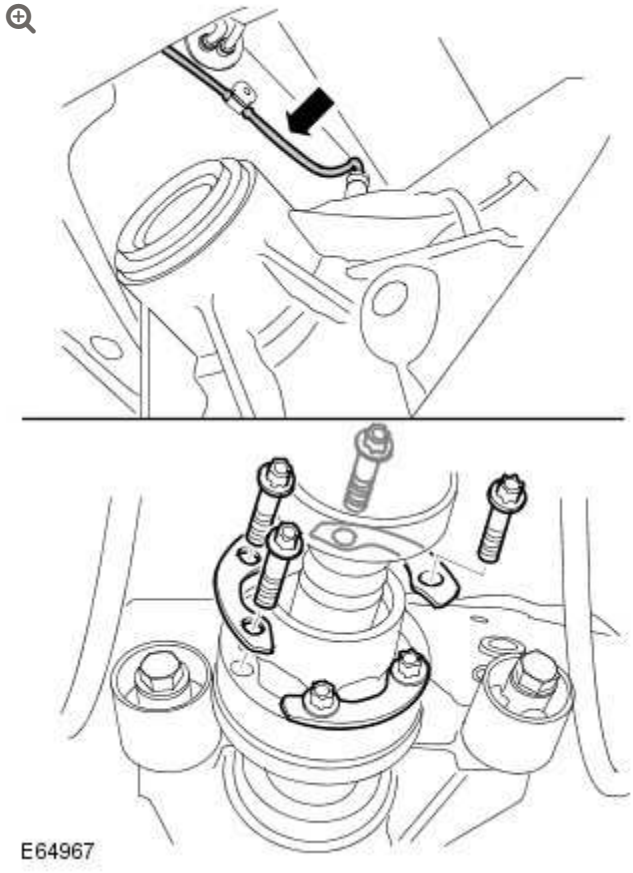

Disconnect the axle case breather line.

7.

NOTE:

Allow the axle to rotate until the drive flange hangs down.

Lower the rear axle assembly.

- Using a transmission jack, support the axle.
- Remove and discard the nut and bolt.
- Remove the 2 bolts.

8.

CAUTION:

Note the fitted position of the bush and mark the sub-frame to aid assembly.

NOTE:

Move the axle case forwards for access.

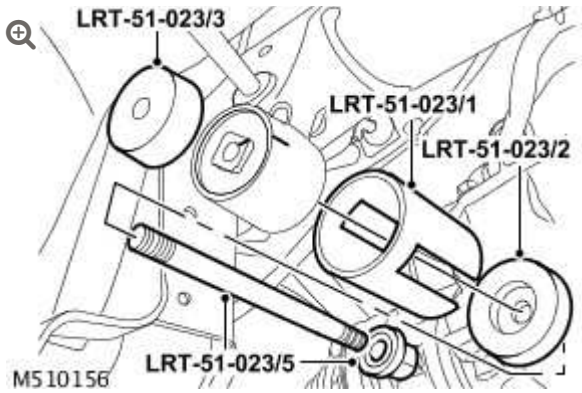

Using the special tools, remove the axle housing bushing.

INSTALLATION

1.

CAUTIONS:

- Lubricate the new bush with rubber lubricant to aid assembly.
- Align the new bush to the mark on the sub-frame.

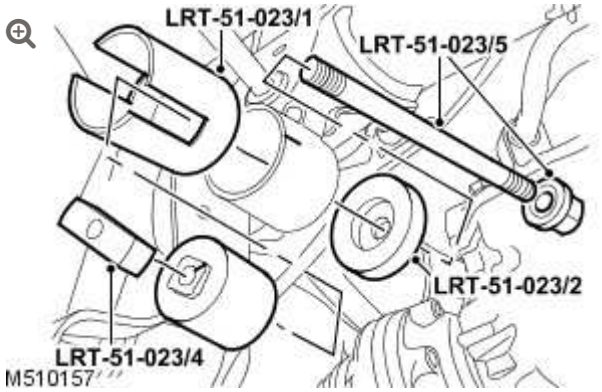

Using the special tools, install the axle housing bushing.

- Clean the component mating faces.

2. Install the axle assembly.
   - Clean the component mating faces.
   - Tighten the bolts to 100 Nm (74 lb.ft).
   - Tighten the new nut and bolt to 120 Nm (89 lb.ft), then a further 180 degrees.
3. Connect the axle case breather line.
4. Attach the driveshaft to the rear axle drive flange.
   - Clean the component mating faces.
   - Install the washers.
   - Tighten the bolts to 44 Nm (32 lb.ft), then a further 45 degrees.
5. Install the fuel tank heat shield.
   - Tighten the screws.
6. Install the exhaust system.
   For additional information, refer to: Exhaust System (309-00, Removal and Installation).

7. Install the wheels and tires.
   - Tighten the wheel nuts to 140 Nm (103 lb.ft).

8. Connect the battery ground cable.
   For additional information, refer to: Specifications (414-00, Specifications).

REAR DRIVE AXLE/DIFFERENTIAL

DRIVE PINION SEAL (G914388)

IN-VEHICLE REPAIR

51.20.01	OIL SEAL - DRIVE PINION - RENEW	5000 CC, AJ V8	1.5	USED WITHINS	+

REMOVAL

1. **WARNING:**

   Do not work on or under a vehicle supported only by a jack. Always support the vehicle on safety stands.

   Raise and support the vehicle.

2. Remove the exhaust system.
   For additional information, refer to: Exhaust System (309-00, Removal and Installation).

3.

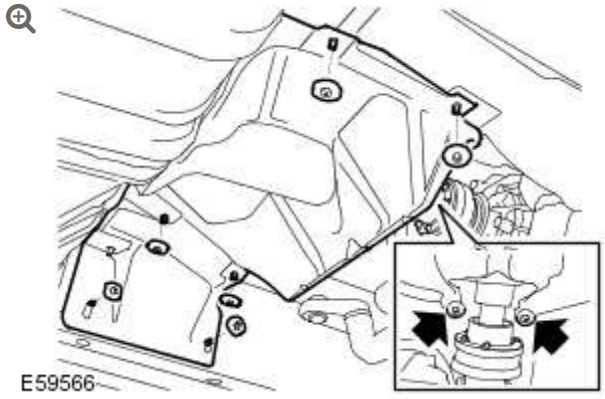

Remove the center heat shield.

- Remove the 8 nuts.

4.

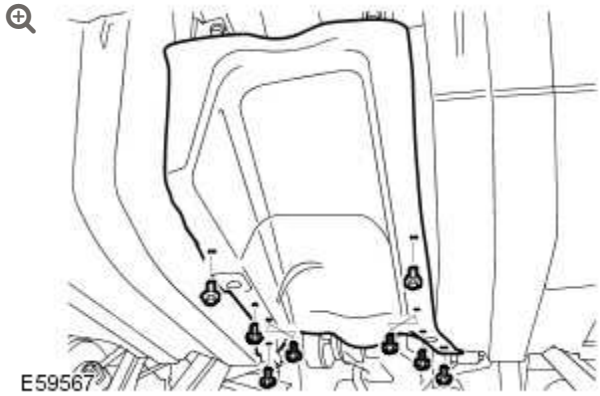

Remove the fuel tank heat shield.

- Remove the 8 screws.

5.

CAUTIONS:

- Mark the position of the driveshaft flange in relation to the drive pinion flange.
- To avoid damage to the joint or gaiter, do not allow the driveshaft to hang.

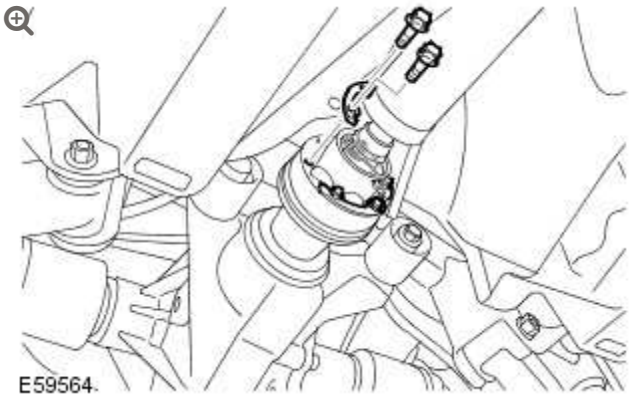

Release the driveshaft from the rear axle drive flange.

- Remove the 6 Torx bolts and washers.
- Discard the bolts.

6.

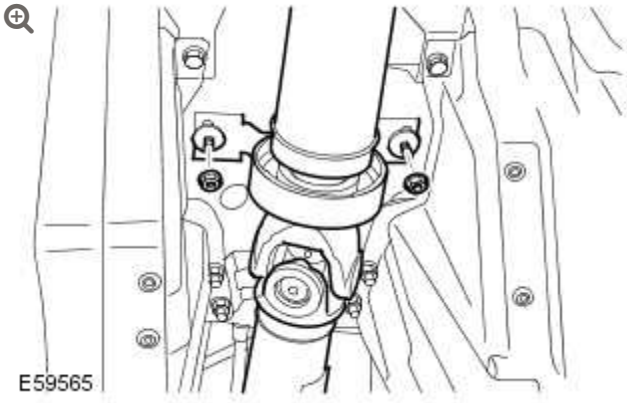

Remove the 2 driveshaft center bearing mount nuts.

- With assistance, release the driveshaft and tie aside.

7.

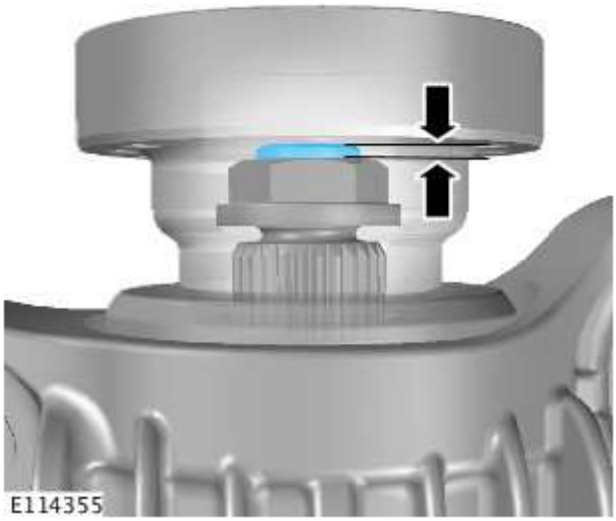

Measure the depth of the pinion nut on the pinion shaft.

- Note measurement for installation.

8.

CAUTION:

This step must be carried out to make sure that the drive pinion nut is correctly tightend on assembly.

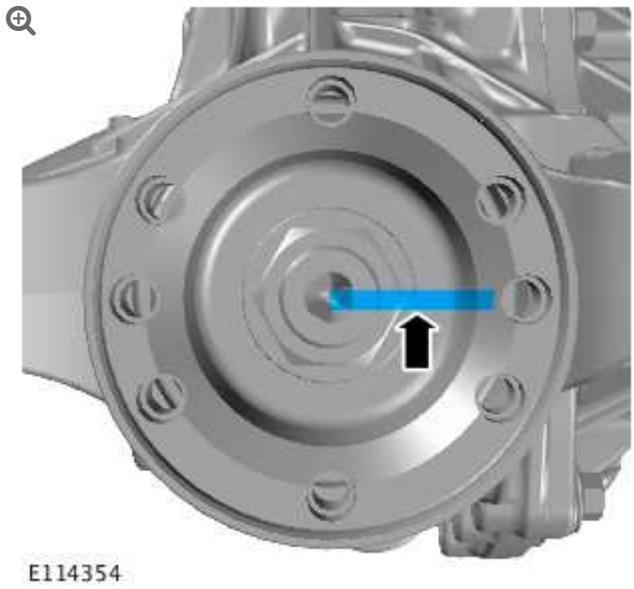

Accurately scribe a line to mark the drive pinion shaft to the drive pinion nut and pinion flange.

9.

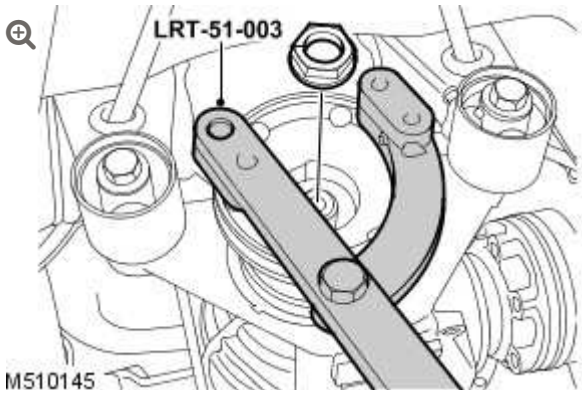

Remove the drive pinion flange retaining nut.

- Using the special tool, counter hold the drive pinion flange.
- Note number of turns for installation.

10.

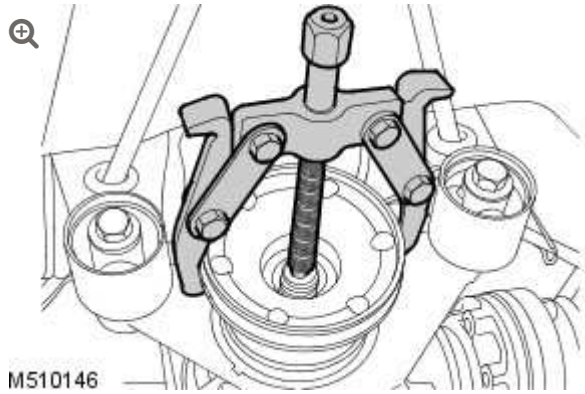

Using a two legged puller remove the pinion flange.

- Check flange seal journal for any damage.
- Carefully remove and discard the oil seal.

INSTALLATION

1. Clean the drive pinion flange.

2. Clean the drive pinion seal mating faces.

3. 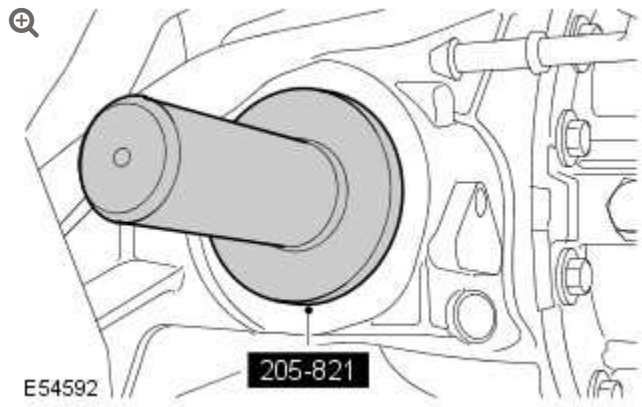

Using the special tool, install the new drive pinion seal.

4.

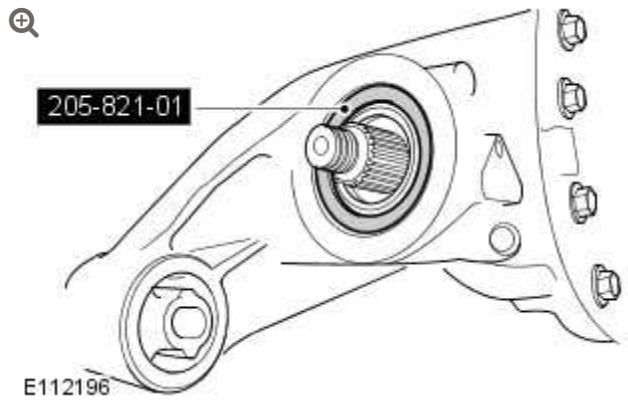

Remove the special tool.

- Install special tool 205-821-01 to the seal face.

5.

CAUTION:

Make sure adaptor is removed or damage to the vehicle may occur.

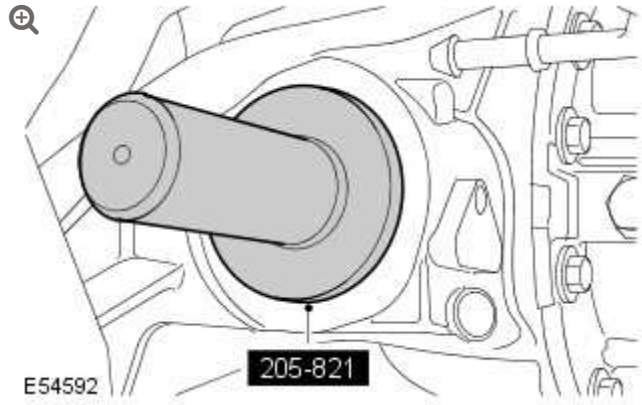

Using the special tool, install the new drive pinion seal.

- Remove the special tools.

6.

CAUTION:

Make sure the drive pinion flange scribed marks are aligned.

Install the drive pinion flange.

7.

CAUTIONS:

- Make sure the mark on the drive pinion nut is never tightened short of the scribed mark on the drive pinion shaft.
- Make sure the drive pinion flange has no end float and is free to rotate.
- Make sure the scribed mark on the drive pinion nut is no more than a maximum of 5 degrees past the scribed mark on the drive pinion shaft.

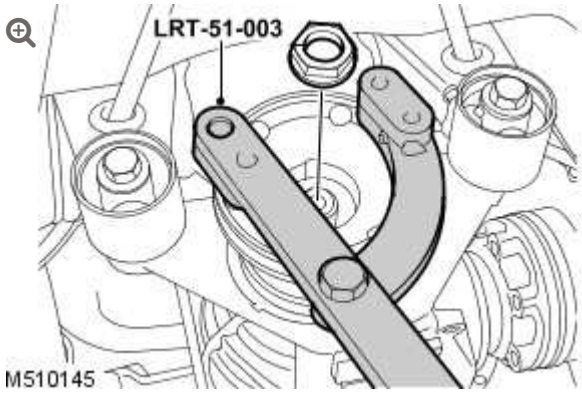

Install the drive pinion flange retaining nut.

- Using the special tool, counter hold the drive pinion flange.
- Install nut to previously noted number of turns.

- Measure the depth of the pinion nut on the pinion shaft.

8.

CAUTION:

It is possible to fit the driveshaft incorrectly. The universal joint must be rearward of the center bearing when installed in the vehicle.

NOTE:

A small amount of oil may weep from the driveshaft joints during storage. The loss of this oil will not affect the operation or durability of the joint.

Attach the driveshaft to the rear axle drive flange.

- Remove the cable tie.
- Clean the component mating faces.
- Align the driveshaft to the previously noted position.
- Tighten the Torx bolts to 44 Nm (32 lb.ft), then a further 45 degrees.
- Remove the cable tie.

9.

CAUTION:

Make sure the center bearing mount is not under tension and central within the slots.

Attach the driveshaft center bearing mount.

- Align the center bearing mount.

- Tighten the nuts to 21 Nm (15 lb.ft).

10. Install the fuel tank heat shield.
    - Tighten the screws.

11. Install the center heat shield.
    - Tighten the nuts.

12. Install the exhaust system.
    For additional information, refer to: Exhaust System (309-00, Removal and Installation).

13. **CAUTION:**

    Make sure the correct specification and quanity of oil is used.

    Check the differential oil level and top up if necessary

2012.0 RANGE ROVER (LM), 205-02

REAR DRIVE AXLE/DIFFERENTIAL

DESCRIPTION AND OPERATION

OPEN REAR DIFFERENTIAL

Component Location

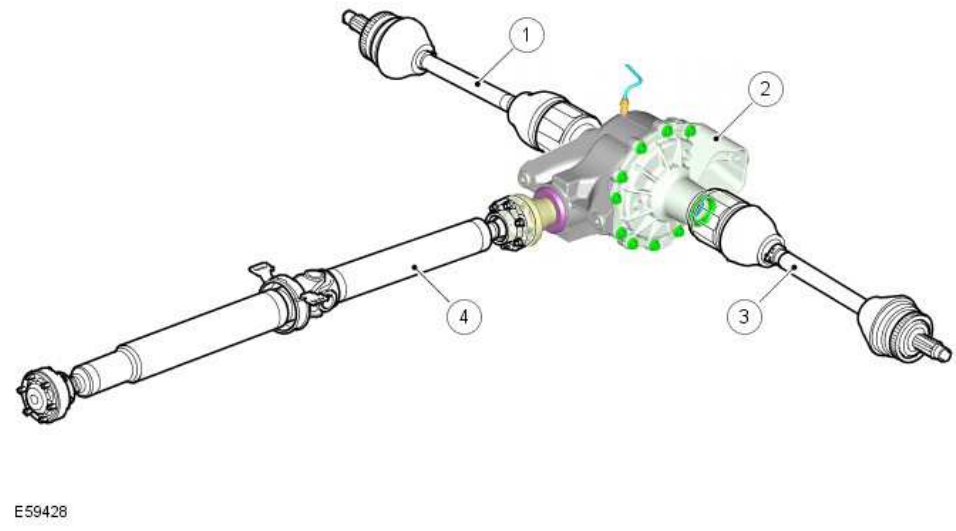

E59428

ITEM	DESCRIPTION
1	RH rear drive halfshaft
2	Rear differential
3	LH rear drive halfshaft
4	Rear driveshaft assembly

OVERVIEW

The rear differential converts the 'angle of drive' through 90 degrees and distributes drive, via the rear drive halfshafts, to the rear wheels.

The output ratio of the rear differential varies depending on the engine variant.
For additional information, refer to: Specifications (205-02 Rear Drive Axle/Differential, Specifications).

The unit is located centrally in the rear of the chassis and is mounted to the chassis via rubber bushes and bolts; two mounting points at the front of the unit and one at the rear.

The cast iron casing comprises two parts; a cover and a carrier. The carrier provides locations for all the internal components. The carrier is sealed to the cover with sealant and secured with 12 bolts. The cover and carrier have cast ribs, which assist mobility. A breather tube is fitted to the top of the carrier. This allows a plastic tube to be fitted and routed to a high point under the vehicle body, preventing the ingress of water when the vehicle is wading.

The differential is a conventional design using a hypoid gear layout, similar to the front differential. The ratio is changed by changing the amount of teeth between the crown wheel drive gear and pinion gear. For example, with a ratio of 3.54:1, the crown wheel drive gear will have 3.54 times more teeth than the pinion gear.

The carrier contains an oil drain plug.

OPEN REAR DIFFERENTIAL INTERNAL COMPONENTS

The differential comprises a pinion shaft and hypoid pinion gear and a crown wheel drive gear with an integral cage, which houses 2

planet gears. Two sun wheels are also located in the cage and pass the rotational drive to the drive shafts.

The pinion shaft is mounted on two opposed taper roller bearings, with a collapsible spacer located between them. The spacer is used to hold the bearings in alignment and also collapses under the pressure applied to the pinion-flanged nut. This allows the flanged nut to be tightened by measuring the torque-to-turn, which collapses the spacer, setting the correct bearing preload.

The pinion shaft has an externally splined outer end, which accepts and locates the input flange, which is retained by the pinion nut. The input flange has four threaded holes and mates with the rear drive shaft. Four bolts secure the rear drive shaft to the input flange. An oil seal is pressed into the pinion housing and seals the input flange to the pinion housing. The pinion shaft has a hypoid gear at its inner end, which mates with the crown wheel drive gear.

The crown wheel drive gear is located on the differential case and secured with 10 bolts. The differential case is mounted on taper roller bearings located in machined bores on each side of the pinion housing. Belleville washers are used to apply the correct bearing preload and hypoid backlash.

The differential carrier has a through hole, which provides location for the shaft. The shaft is supported by a sun gear and a needle roller bearing. The shaft is fitted with a snap ring at one end, which locates in a machined groove in the sun gear, locking the shaft in position.

The sun gears are located in pockets in the carrier cage and mesh with the planet gears. Spacers are fitted between the sun wheels and the carrier and set the correct mesh contact between the planet gears and the sun wheels. Each sun wheel has a machined bore with internal splines and machined groove near the splined end. The groove provides positive location for a snap ring fitted to the end of each output flange.

Each output shaft has a spline, which locates in each sun wheel. A snap ring fitted to the splined shaft locates in the groove of the sun wheel bore and positively locates the output shaft. Oil seals are pressed into each side of the pinion housing and seals the output shaft.

The operating principles of the front and rear differentials are the same. Rotational input from the drive shaft is passed via the input flange to the pinion shaft and pinion gear. The angles of the pinion gear to the crown wheel drive gear moves the rotational direction through 90 degrees.

The transferred rotational motion is now passed to the crown wheel drive gear, which in turn rotates the differential casing. The shaft, which is secured to the casing, also rotates at the same speed as the casing. The planet gears, which are mounted on the shaft, also rotate with the casing. In turn, the planet gears transfer their rotational motion to the left and right hand sun wheels, rotating the drive halfshafts.

When the vehicle is moving in a forward direction, the torque applied through the differential to each sun wheel is equal. In this condition both drive halfshafts rotate at the same speed. The planet gears do not rotate and effectively lock the sun wheels to the differential casing.

If the vehicle is turning, the outer wheel will be forced to rotate faster than the inner wheel by having a greater distance to travel. The differential senses the torque difference between the sun wheels. The planet gears rotate on their axes to allow the outer wheel to rotate faster than the inner one.

ELECTRONIC TORQUE MANAGED (ETM) REAR DIFFERENTIAL

Component Location

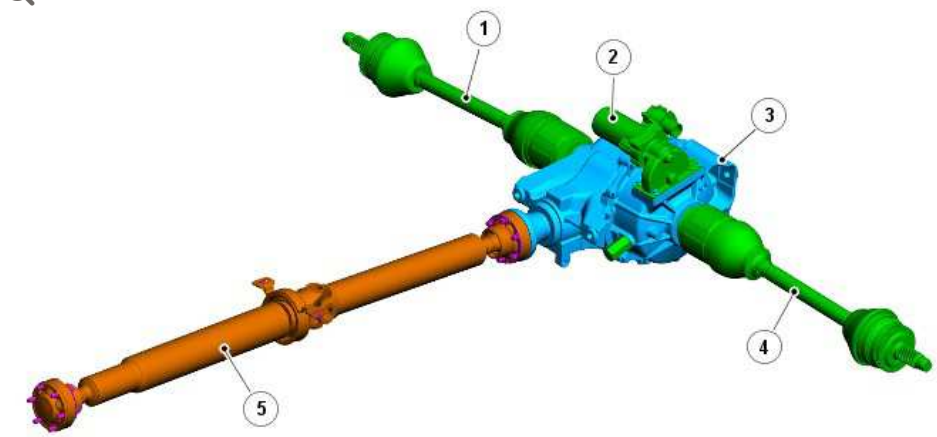

E84160

ITEM	DESCRIPTION
1	RH rear drive halfshaft
2	Actuator motor
3	Rear differential
4	LH rear drive halfshaft
5	Rear driveshaft assembly

OVERVIEW

The Electronic Torque Managed (ETM) rear differential is available as an option on both petrol and diesel derivatives. The output ratio for the ETM rear differential remains the same as the open differentials for both petrol and diesel derivatives.

The ETM differential has the same functionality as the open rear differential but incorporates a locking feature.

ELECTRONIC TORQUE MANAGED (ETM) REAR DIFFERENTIAL INTERNAL COMPONENTS

An electronically controlled multi-plate clutch provides a rear differential lock and torque biasing function to give improved traction performance and vehicle dynamic stability.

A strategy, to electronically control the rear differential multi-plate clutch assembly, has been developed to provide:

- a pre-loading function, increasing locking torque with increased driving torque
- a slip controller to increase locking torque under off-road conditions and decrease locking torque for optimum comfort, e.g. parking.

The unit receives a torque input from the transfer box output shaft, which is passed through the unit to two outputs for the rear drive halfshafts.

The unit detects wheel slip via various vehicle system inputs to the ETM rear differential control module and locks the differential accordingly.

The ETM differential locking and biasing feature is actuated via a Direct Current (DC) motor, which is controlled by the ETM rear differential control module, via a Pulse Width Modulation (PWM) signal.

MULTI-PLATE CLUTCH ASSEMBLY

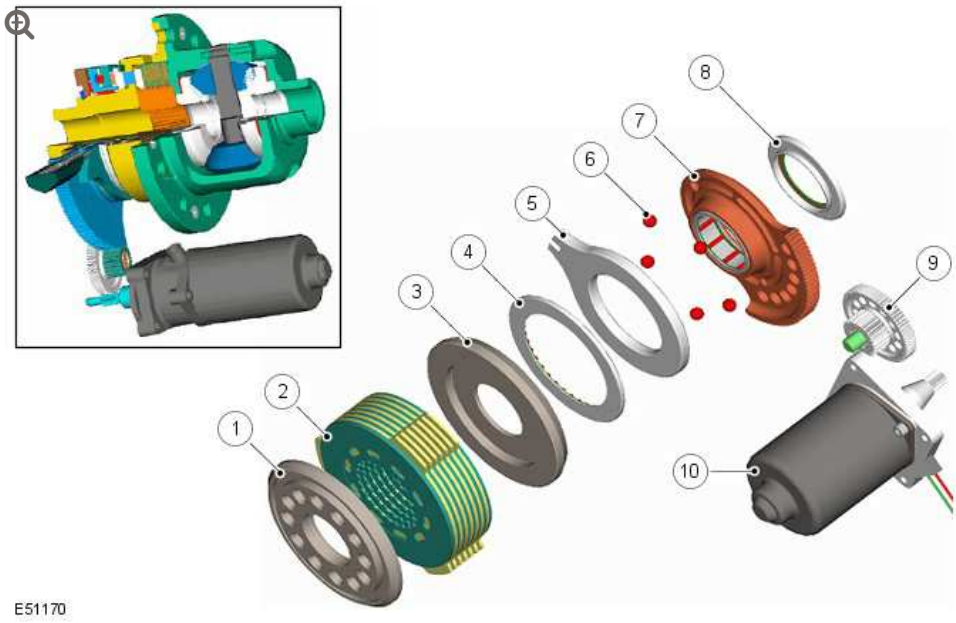

ITEM	DESCRIPTION
1	Pressure disc
2	Clutch plate assembly
3	Pressure disc
4	Thrust race
5	Output actuator
6	Actuator balls
7	Input actuator
8	Bearing pre-load spacer
9	Reduction gearset
10	Actuator motor

The multi-plate clutch assembly for both center (transfer box) and ETM rear differentials act in a similar way. The aim of the multi-plate clutch assembly is to prevent excessive differential slip and therefore maximize the traction performance of the vehicle. This is fundamentally different from the 'braked' traction control, which can only counteract differential slip when it occurs.

A certain amount of differential slip is required to allow the vehicle to turn corners and to remain stable under control of the Anti-lock Braking System (ABS). The transfer box control module monitors the driver's demands through primary vehicle controls and automatically sets the slip torque at the rear differential, via the ETM rear differential control module. The system is completely automatic and does not require any special driver input.

The multi-plate clutch assembly actively controls the torque flow through the rear differential and optimizes the torque distribution in the driveline. The clutch assembly biases the torque from the differential to the wheels with the higher grip and prevents the wheels with the lower grip from spinning.

By turning the input actuator disc, via the motor shaft, the output actuator is rotated. This movement acts on five balls in a ramp mechanism between the input and output actuators and gives a defined axial movement. The movement forces the pressure disc to induce friction between the sun gear and differential case via the clutch plates supported by the sun gear and the plates supported by the clutch basket on the differential case. This frictional force inhibits the differential rotation; the differential case and left hand differential side gear are locked together.

ELECTRONIC TORQUE MANAGED (ETM) REAR DIFFERENTIAL CONTROL MODULE

The ETM rear differential control module controls the multi-plate clutch actuation. The control module is mounted on a bracket located on the LH C-pillar, behind the trim.

The control module is connected on the Controller Area Network (CAN) bus and controls the differential operation using CAN messages from other control modules on the network.

The control module uses three connectors for all inputs and outputs. It receives a permanent power supply via a 40A fusible link located in

the Battery Junction Box (BJB), and an ignition supply via fuse 24 located in the Central Junction Box (CJB).

The control module memorizes the position of the ETM rear differential motor when the ignition is switched off.

The control module controls the closed loop position sensing system within the motor and regulates the power supply to the motor.

If the control module is replaced, a Land Rover approved diagnostic tool must be connected to the vehicle and the ETM rear differential control module self-calibration procedure must be performed. This procedure must also be performed if the motor or differential assembly is replaced.

If a fault occurs with the ETM rear differential, the control module or one of the required input signals, i.e. road speed signal, the control module records an error code and a warning lamp, in the instrument cluster, illuminates permanently.

CAN BUS MESSAGES

The CAN bus is a high speed broadcast network connected between various vehicle control modules. It allows the fast exchange of data between control modules every few microseconds. The bus comprises 2 wires, which are twisted together to minimize electromagnetic interference (noise) produced by the CAN messages.

The ETM rear differential control module is connected on the CAN bus, via the transfer box control module, and controls differential operation using CAN messages from other control units on the network. Wheel speed, steering angle, automatic transmission speed, temperature information, car configuration, axle ratios and mode inputs, are some of the main signals received by the control module.

The control module also sends messages via the CAN bus to tell other control modules on the network, the status of the ETM rear differential. The clutch torque and default mode status are some of the main signals sent out by the control module.

The following table shows the messages that can be displayed in the message center of a high-line instrument cluster relating to the ETM rear differential:

MESSAGE	DESCRIPTION	CHIME
'TRANSMISSION OVERHEAT' 'SLOW DOWN'	Rear differential temperature has reached or is approaching the overheat threshold	None
'TRANSMISSION FAULT' 'TRACTION REDUCED'	Transfer box control module has stopped transmitting CAN bus messages. Defaults to open center differential. Message also displayed when fault occurs with ETM rear differential	None
'TRANSMISSION FAULT' 'STOP SAFELY'	Fault has occurred with ETM rear differential. Stop vehicle at earliest opportunity	Single

On vehicles fitted with the low line instrument cluster, in place of the message center there will be a status lamp, which has the following logic:

- Amber - Over temperature
- Red - Failure, stop vehicle

TERRAIN RESPONSE

The Terrain Response system allows the driver to select a program, which will provide the optimum settings for traction and performance for the prevailing terrain conditions.

Depending on vehicle specification the system is controlled by either a rotary control or rocker switch located on the floor console:

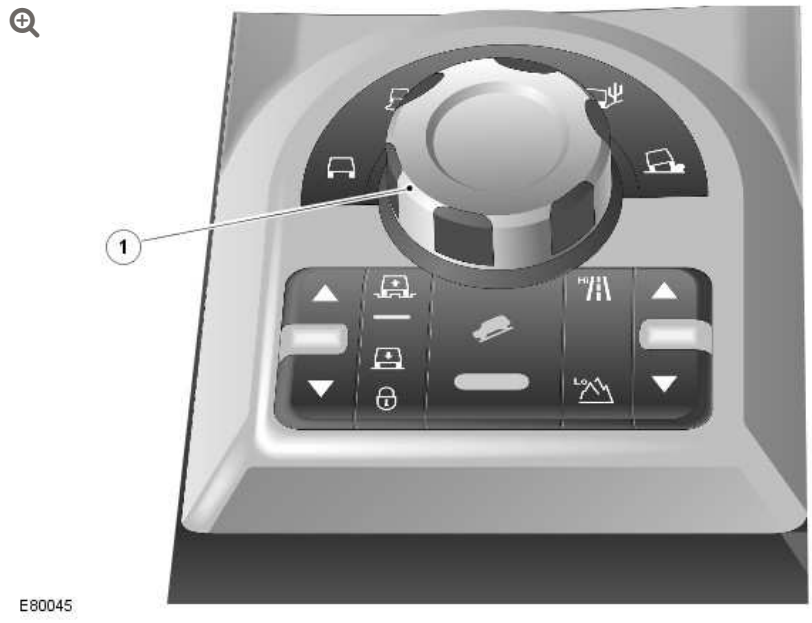

ITEM	DESCRIPTION
1	Terrain Response rotary control knob

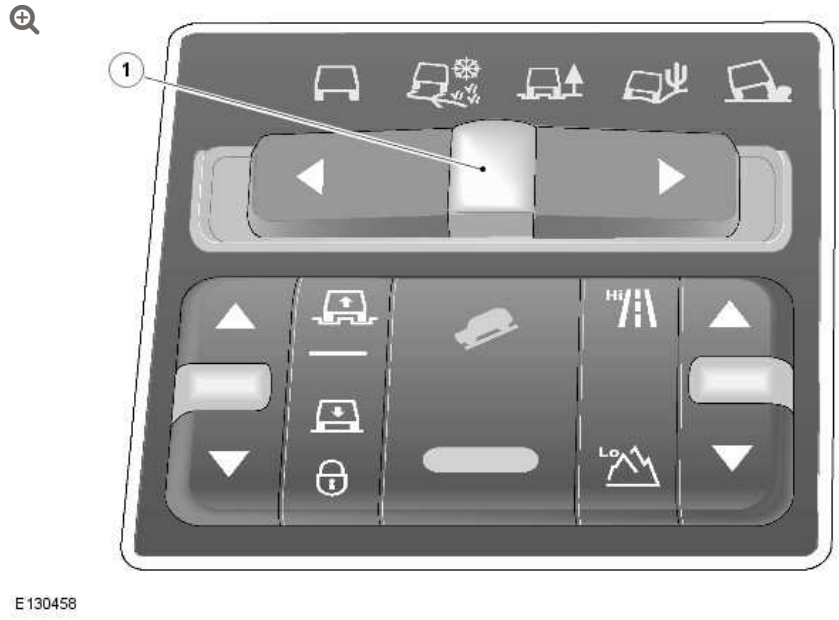

ITEM	DESCRIPTION
1	Terrain Response rocker-switch

The system uses a combination of vehicle subsystems to achieve the required vehicle characteristics for the terrain selected. The following subsystems form the Terrain Response system:

- Engine management system (EMS)
- Automatic transmission
- Transfer box
- Brake system
- Air suspension

Each subsystem control module provides a feedback for the selected program so that the Terrain Response control module can check that all systems are controlling the system correctly. The exception to this is the ETM rear differential control module, which does not provide feedback to the Terrain Response system as it is a slave to the transfer box control module.
For additional information, refer to: Ride and Handling Optimization (204-06 Ride and Handling Optimization, Description and Operation).

SERVICE

The oil used in the ETM rear differential contains unique additives and friction modifiers, which enhance the differentials operation. No other oil must be used in the ETM rear differential.
For additional information, refer to: Specifications (205-02 Rear Drive Axle/Differential, Specifications).

ELECTRONIC TORQUE MANAGED (ETM) REAR DIFFERENTIAL SERVICEABLE COMPONENTS

- Halfshaft seals
- Needle roller bearing assembly
- Chassis bush/fixings

- Actuator motor
- Temperature sensor
- Control module and bracket
- Lubricant

DIAGNOSTICS

The ETM rear differential control module can store fault codes, which can be retrieved by connecting the Land Rover approved diagnostic tool using ISO-14229 protocol.

The information is communicated via a diagnostic socket.

The diagnostic socket allows the exchange of information between the various control modules on the bus systems and the Land Rover approved diagnostic tool. The information is communicated to the socket, via the CAN bus. This allows the retrieval of diagnostic information and programming of certain functions using the Land Rover approved diagnostic tool.

The ETM rear differential control module uses Diagnostic Trouble Codes (DTC), which relate to ETM rear differential electrical faults.

REAR DRIVE AXLE/DIFFERENTIAL

DIAGNOSIS AND TESTING

PRINCIPLES OF OPERATION

For additional information, refer to the relevant Description and Operation section of the workshop manual.

INSPECTION AND VERIFICATION

CAUTION:

Diagnosis by substitution from a donor vehicle is NOT acceptable. Substitution of control modules does not guarantee confirmation of a fault, and may also cause additional faults in the vehicle being tested and/or the donor vehicle.

1. Verify the customer concern.
2. Visually inspect for obvious signs of mechanical or electrical damage.

Visual Inspection

MECHANICAL	ELECTRICAL
▪ Differential oil leakage ▪ Sensor installation	▪ Power supply ▪ Fuse(s) ▪ Wiring harness physical damage or water ingress ▪ Loose or corroded electrical connectors ▪ Controller area network (CAN) circuits ▪ Sensors ▪ Rear Differential Control Module

3. If an obvious cause for an observed or reported concern is found, correct the cause (if possible) before proceeding to the next step.

4. If the cause is not visually evident, verify the symptom and refer to the Symptom Chart, alternatively check for Diagnostic Trouble Codes (DTCs) and refer to the DTC Index.

SYMPTOM CHART

SYMPTOM	POSSIBLE MESSAGE	POSSIBLE CAUSES	ACTION
Rumbling noise from the rear of the vehicle varying at different vehicle speed and load	▪ N/A	▪ Rear differential internal failure ▪ Road noise ▪ Worn or damaged driveshaft joint ▪ Wheel bearing ▪ Another component contacting the front/rear drive halfshaft	Using the manufacturer approved diagnostic system run application Noise, vibration and harshness diagnostic test - Rear differential
	▪ N/A		

SYMPTOM	POSSIBLE MESSAGE	POSSIBLE CAUSES	ACTION
Running at reduced capability with fault present		▪ Water ingress to wiring harness or connectors ▪ Reduced differential capability ▪ Differential increased tolerances ▪ Internal fault ▪ Rear Differential Control Module fault (Rear Differential Control Module)	Check for stored DTCs and refer to the DTC index. Visually inspect the wiring harness and connectors for water ingress. Refer to the warranty policy and procedures manual if a module is suspect.
Rear differential overheat	▪ Rear Axle Overheat	▪ Oil level incorrect ▪ Oil level incorrect specification ▪ Sensor fault ▪ Internal fault	Check for stored DTCs and refer to the DTC index. Check for correct oil quantity and specifications. Refer to the relevant section of the workshop manual.
Excessive steering effort	▪ Rear Axle Fault	▪ Sticking or stuck actuator	Check for stored fault codes and refer to DTC index.

DTC INDEX

For a list of Diagnostic Trouble Codes (DTCs) that could be logged on this vehicle, please refer to Section 100-00. REFER to: Diagnostic Trouble Code (DTC) Index - DTC: Module Name: Rear Differential Control Module (100-00 General Information, Description and Operation).

REAR DRIVE AXLE/DIFFERENTIAL

SPECIFICATIONS

Sealers

ITEM	LAND ROVER PART NO.
Input shaft splines	STC 50554
Differential electronic torque managed (ETM) unit locking motor	STC 50550

Lubricants

ITEM	SPECIFICATION
*** Recommended lubricant:**	
Open unit	Castrol SAF-XO - 75W/90
ETM unit	Castrol SAF Carbon Mod Plus

*** Do not use any lubricant other than that specified**

Capacities

UNIT	SERVICE FILL CAPACITY
Open differential	1.14 liters (2.41 US pints) (1.20 US quarts)
ETM differential	1.55 liters (3.28 US pints) (1.64 US quarts)

Rear 'Open' Differential

ITEM	SPECIFICATION
Reduction ratio:	
TDV8 Diesel engine	3.54:1
V8 Supercharged Petrol engine	3.54:1
V8 Naturally Aspirated Petrol engine	3.54:1

Rear Electronic Torque Managed (ETM) Differential

ITEM	SPECIFICATION
ETM range	Up to 2500 Nm (98.5 lbf/ft)
ETM motor	Operates the ball/ramp mechanism and wet clutch. Motor incorporates a temperature sensor and is controlled by an ECU
Differential type	4 pin
Reduction ratio:	
TDV8 Diesel engine	3.54:1
V8 Supercharged Petrol engine	3.54:1
V8 Naturally Aspirated Petrol engine	3.54:1

Torque Specifications

DESCRIPTION	NM	LB-FT
Oil drain plug	28	21
Oil filler plug	34	25
Oil temperature sensor	22	16
++ Differential locking motor	10	7
Differential front mounting bolts	100	74

DESCRIPTION	NM	LB-FT
** Differential rear mounting bolt		
Stage 1	120	89
Stage 2	Tighten a further 180 degrees	
* Driveshaft to rear axle drive flange bolts		
Stage 1	44	33
Stage 2	Tighten a further 45 degrees	

*** New ''Patchlok' Torx bolts must be installed**

**** New nut must be installed**

++ Apply sealant, Part No. STC 50550 to flange of locking motor

FRONT DRIVE AXLE/DIFFERENTIAL

AXLE ASSEMBLY – V8 S/C 5.0L PETROL, LHD AWD

(G1225883)

REMOVAL AND INSTALLATION

54.10.01	DIFFERENTIAL – RENEW	LEFT HAND DRIVE, 5000 CC, AJ V8, SUPERCHARGED	6.9	USED WITHINS +

SPECIAL TOOL(S)



205-735 (LRT-54-026)

Remover halfshaft inboard joint



308-626/1

Installer halfshaft oil seal



308-626/2

Installer/Guide halfshaft oil seal



100-012 (LRT-99-004)

Impulse extractor



205-754 (LRT-54-027)

Ball joint separator

REMOVAL

NOTE:

Some variation in the illustrations may occur, but the essential information is always correct.

1. Disconnect the battery ground cable.
   For additional information, refer to: Specifications - Armoured (414-00 Battery and Charging System - General Information, Specifications).

2. **WARNING:**

   Make sure to support the vehicle with axle stands.

   Raise and support the vehicle.

3. Remove the front wheels and tires.

4. Secure the hood in the service position.
   - Release the support struts.

5. Remove the engine cover.
   For additional information, refer to: Engine Cover - V8 5.0L Petrol/V8 S/C 5.0L Petrol (501-05 Interior Trim and Ornamentation, Removal and Installation).

6. Remove the RH air cleaner assembly.
   For additional information, refer to: Air Cleaner Element

(303-12B Intake Air Distribution and Filtering - V8 S/C 5.0L Petrol, Removal and Installation).

7. Remove the steering gear.
   For additional information, refer to: Steering Gear - V8 S/C 5.0L Petrol, LHD AWD (211-02 Power Steering, Removal and Installation).

8. Remove the front driveshaft.
   For additional information, refer to: Front Driveshaft - V8 5.0L Petrol/V8 S/C 5.0L Petrol (205-01 Driveshaft, Removal and Installation).

9. **NOTE:**

   Use an additional wrench to prevent the ball joint rotating.

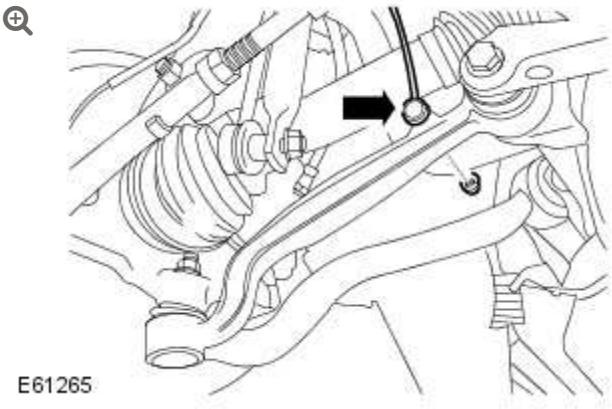

   RH front: Disconnect the suspension height sensor link arm.

   - Remove the nut.

10.

CAUTION:

Support the lower arm.

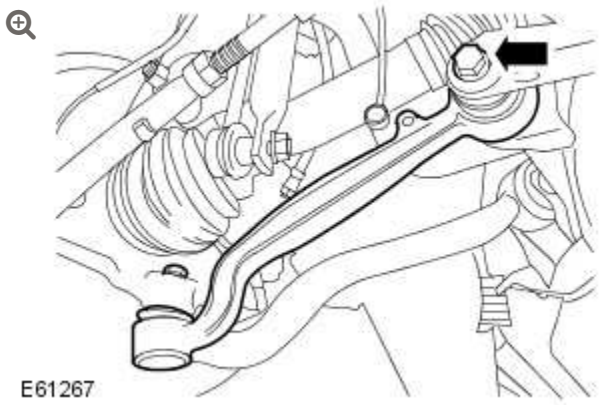

RH front: Disconnect the lower arm.

- Remove the bolt and discard the nut.

11.

CAUTION:

Support the tie rod.

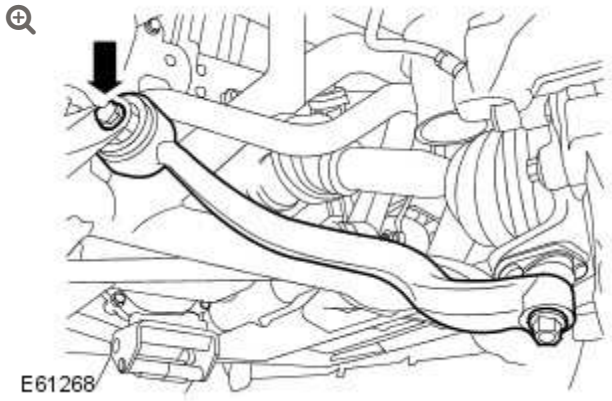

RH front: Disconnect the tie rod.

- Remove the bolt and discard the nut.

12.

WARNING:

Do not remove the nuts.

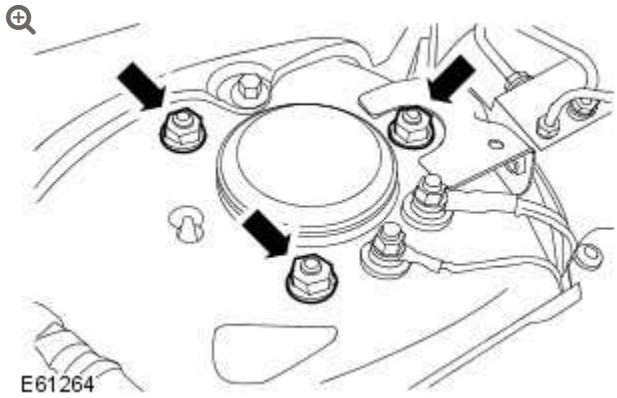

RH front: Release the air suspension spring.

- Loosen the 3 nuts.

13.

CAUTION:

Support the halfshaft.

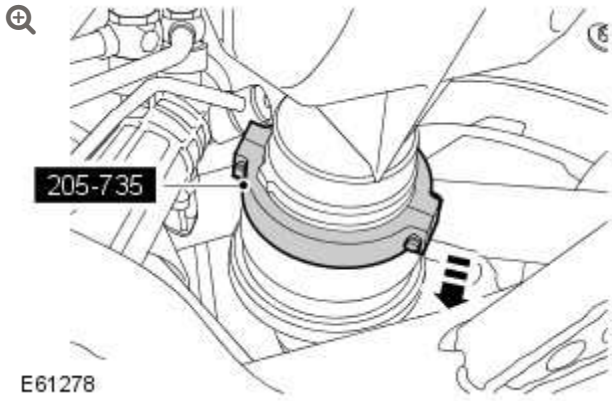

RH front: Using the special tool, release the halfshaft from the differential.

14.

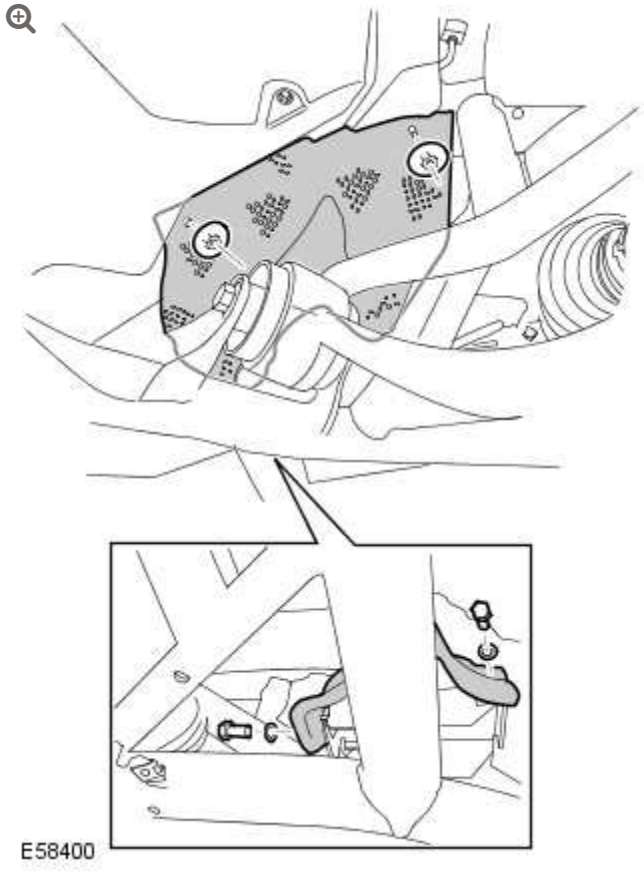

Remove the engine compartment LH heat shield.

- Remove the 2 nuts.
- Remove the 2 screws.

15. Using a transmission jack, raise the engine clear of the engine mount.

16.

CAUTION:

Always plug any open connections to prevent contamination.

Disconnect the differential case breather line.

17.

WARNING:

Fluid loss is unavoidable, use absorbent cloth or a container to collect the fluid.

NOTE:

The upper rear bolt will remain in the differential case.

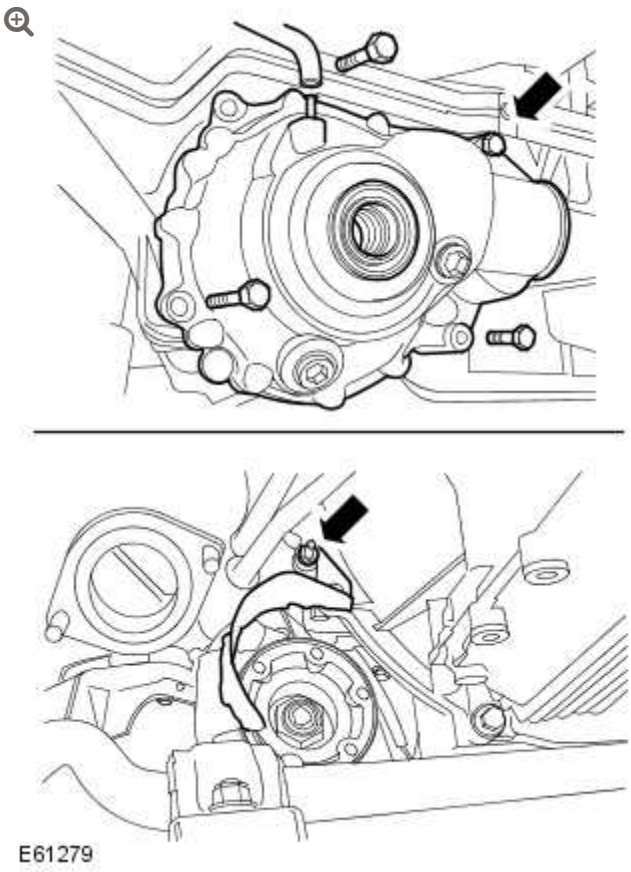

Release the differential case.

- Remove the nut securing the front driveshaft, joint shield.
- Remove and discard the 4 bolts.

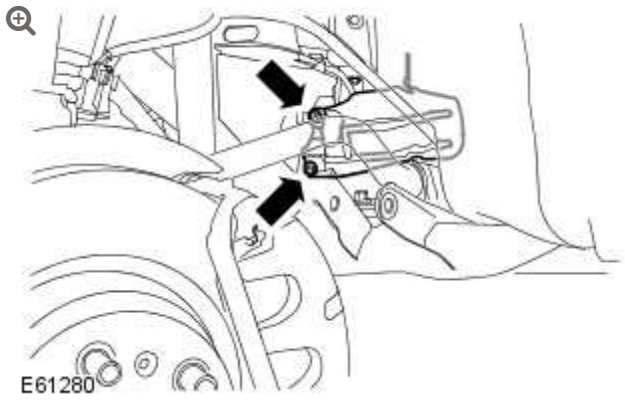

Remove the front driveshaft joint shield.

- With assistance, position the front differential case rearward.
- Remove the 2 Torx screws.

19.

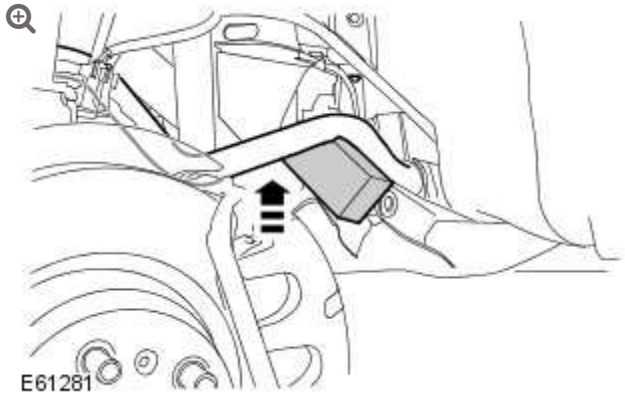

LH front: Raise the stablizer bar.

- Secure the stabilizer bar in the raised position.

20.

CAUTION:

Make sure component mating faces are not damaged during removal.

NOTE:

The differential case is rotated by 90 degrees, and removed through the sub-frame with the halfshaft oil seal uppermost.

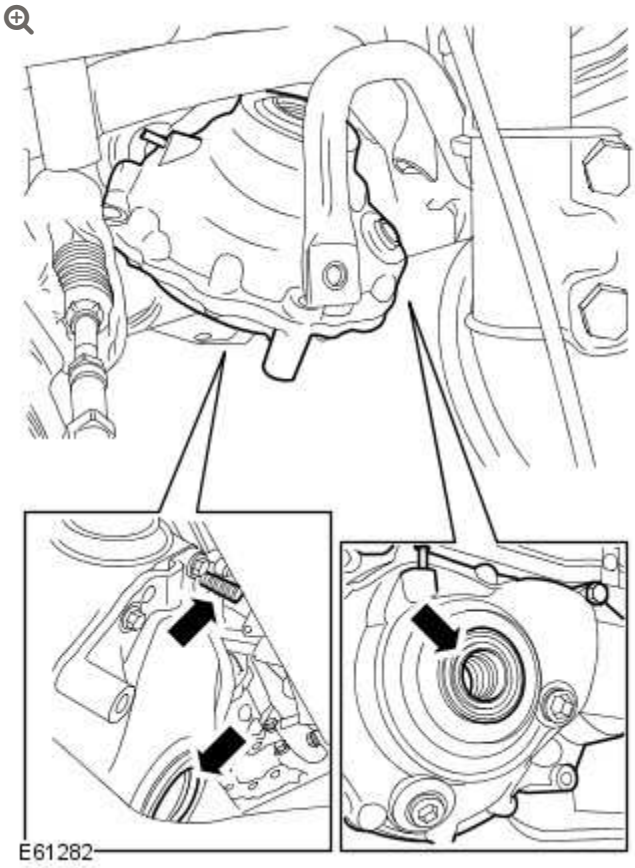

With assistance, carefully remove the front differential case.

- Remove the bolt.
- Remove and discard the O-ring seal.
- Remove and discard the halfshaft oil seal.

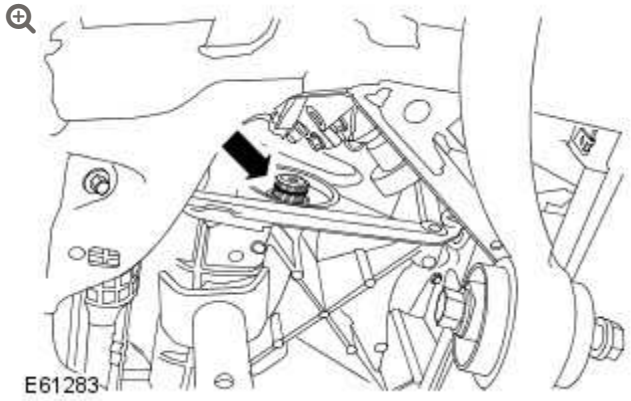

Remove the retaining clip from the RH halfshaft.

INSTALLATION

1. Clean the component mating faces.

2. Install a new O-ring seal to the differential case.
   - Lubricate the O-ring seal with petroleum jelly.

3. Install a new clip to the RH halfshaft.

4. Install a new clip to the LH halfshaft.

5. **CAUTION:**

   Make sure that a new bolt is installed.

   NOTE:

   Install the upper rear bolt to its location in the differential case.

With assistance, carefully install the front differential case.

- Position the differential rearward of its location.

6. Install the front driveshaft joint shield.
   - Tighten the Torx screws to 3 Nm (2 lb.ft).

7. **CAUTIONS:**

   - Make sure the O ring seal remains in its fitted position.
   - Make sure that new bolts are installed.

   With assistance, align and secure the front differential case.
   - Engage the front drive shaft joint shield with its securing stud.
   - Align the dowel and tighten the bolts to 115 Nm (85 lb.ft).
   - Tighten the front drive shaft joint shield nut to 10 Nm (7 lb.ft).

8. Tighten the 100 mm length bolts.
   - Stage 1: Tighten the bolts to 50 Nm (37 lb.ft).
   - Stage 2: Tighten the bolts a further 90 degrees.

9. Tighten the 55 mm length bolts.
   - Stage 1: Tighten the bolts to 50 Nm (37 lb.ft).
   - Stage 2: Tighten the bolts a further 60 degrees.

10. Connect the differential case breather line.

11. Install the steering gear.
    For additional information, refer to: Steering Gear - V8 S/C 5.0L Petrol, LHD AWD (211-02 Power Steering, Removal and Installation).

12. Remove the engine support.

13. Release the stabilizer bar.

14. **NOTE:**

    Remove and discard the blanking caps.

    Secure the RH inner halfshaft joint to the differential.

15. **NOTE:**

    Do not fully tighten the locking nut at this stage.

    RH front: Connect the tie rod.

    - Install the bolt with a new nut.

16. **NOTE:**

    Do not fully tighten the locking nut at this stage.

    RH front: Connect the lower arm.

    - Install the bolt with a new nut.

17.

CAUTION:

Make sure the hardened steel washer is fitted against the stabalizer bar link.

NOTE:

Use an additional wrench to prevent the ball joint rotating.

RH front: Connect the stabilizer bar link.

- Install the washer.
- Tighten the nut to 100 Nm (74 lb.ft).

18.

NOTE:

Use an additional wrench to prevent the ball joint rotating.

RH front: Connect the suspension height sensor link arm.

- Tighten the nut to 8 Nm (6 lb.ft).

19. Install the engine compartment LH heat shield.
    - Tighten the screws.
    - Tighten the nuts.

20. Install the front driveshaft.
    For additional information, refer to: Front Driveshaft - V8 5.0L Petrol/V8 S/C 5.0L Petrol (205-01 Driveshaft, Removal and Installation).

21. Install the front wheels and tires.
    - Tighten the wheel nuts to 140 Nm (103 lb.ft).

22. **CAUTION:**

    Nuts and bolts must be tightened with the weight of the vehicle on the suspension.

    Tighten the lower arm nuts and bolts to 165 Nm (122 lb.ft) plus a further 90 degrees.

23. **CAUTION:**

    Nuts and bolts must be tightened with the weight of the vehicle on the suspension.

    Tighten the tie rod nuts and bolts to 165 Nm (122 lb.ft) plus a further 90 degrees.

24. RH front: Secure the air spring.
    - Tighten the nuts securing the air springs to 56 Nm (41 lb.ft).

25. Install the RH air cleaner assembly.
    For additional information, refer to: Air Cleaner Element (303-12B Intake Air Distribution and Filtering - V8 S/C 5.0L Petrol, Removal and Installation).

26. Install the engine cover.
    For additional information, refer to: Engine Cover - V8 5.0L Petrol/V8 S/C 5.0L Petrol (501-05 Interior Trim and Ornamentation, Removal and Installation).

27. Connect the hood support struts.

28. Connect the battery ground cable.
    For additional information, refer to: Specifications (414-00 Battery and Charging System - General Information, Specifications).

29. Check, and if necessary, adjust the wheel alignment.
    For additional information, refer to: Four-Wheel Alignment (204-00 Suspension System - General Information, General Procedures).

DIFFERENTIAL BREATHER TUBE – V8 5.0L PETROL/V8 S/C 5.0L PETROL (G1225769)

REMOVAL AND INSTALLATION

SPECIAL TOOL(S)



308–794

Installer, Differential Breather Tube

REMOVAL

NOTE:

Some variation in the illustrations may occur, but the essential information is always correct.

1. Disconnect the battery ground cable.
   Refer to: Specifications (414-00 Charging System - General Information, Specifications).

2. **WARNING:**

   Make sure to support the vehicle with axle stands.

   Raise and support the vehicle.

3. Remove the LH front wheel and tire.

4. **CAUTION:**

   Make sure that the area around the component is clean and free of foreign material.

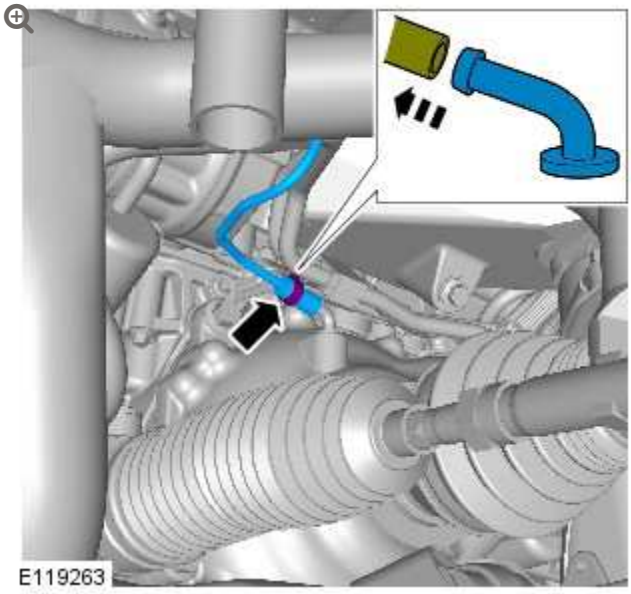

5.

CAUTION:

Note the fitted position of the component prior to removal.

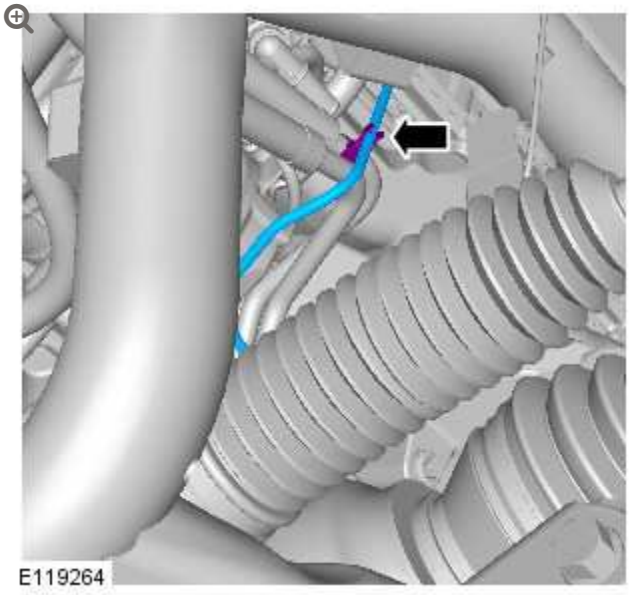

6.

CAUTION:

Note the fitted position of the component prior to removal.

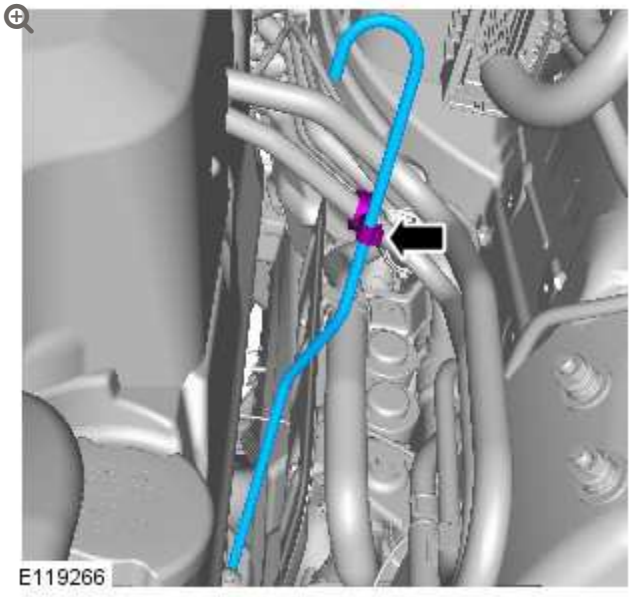

7.

CAUTION:

Take care not to damage the differential case when removing the breather.

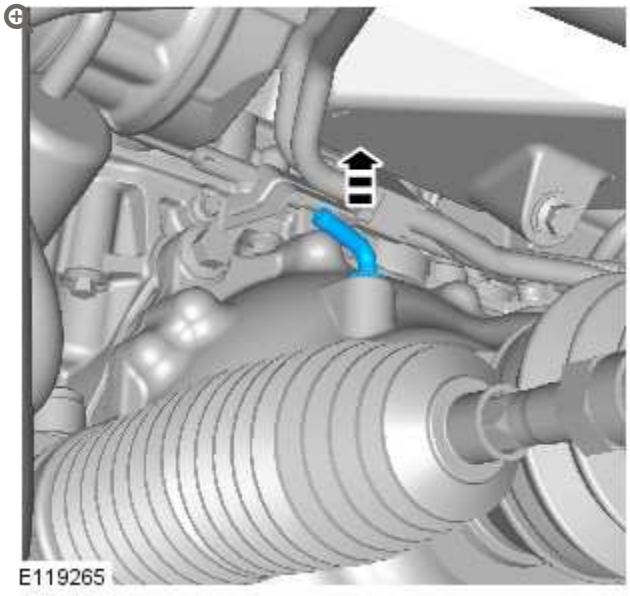

INSTALLATION

1.

CAUTIONS:

- Make sure that the area around the component is clean and free of foreign material.
- Make sure the breather tube is installed in the correct orientation.

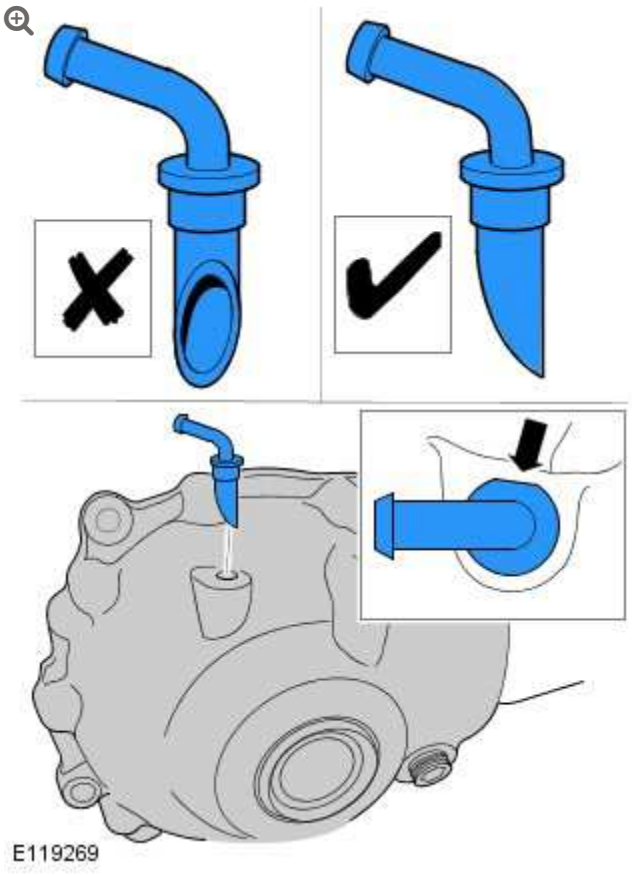

2.

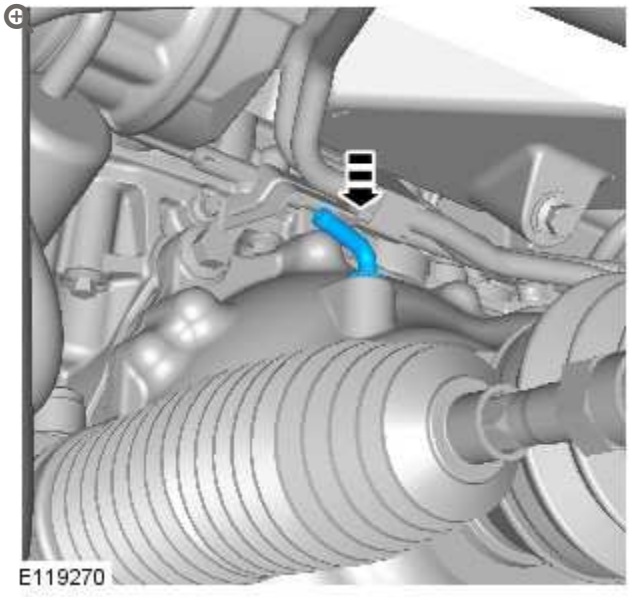

3.

CAUTION:

Care must be taken not to damage the surrounding components when inserting the special tool.

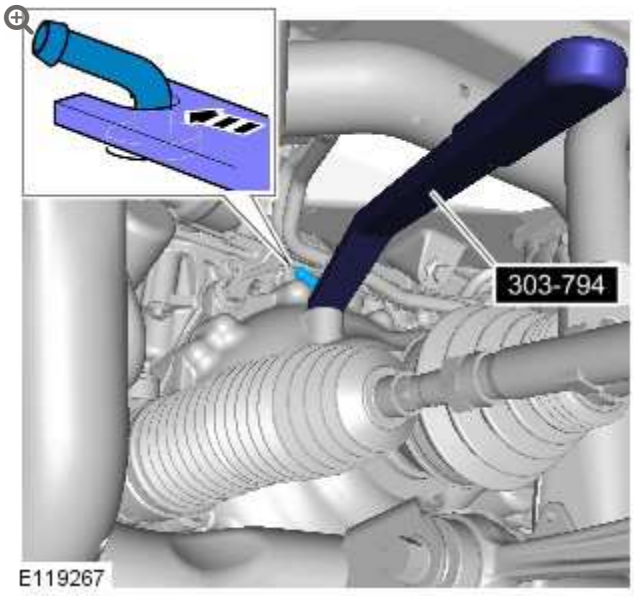

Special Tool(s): 308-794

4.

CAUTION:

Take extra care not to damage the component.

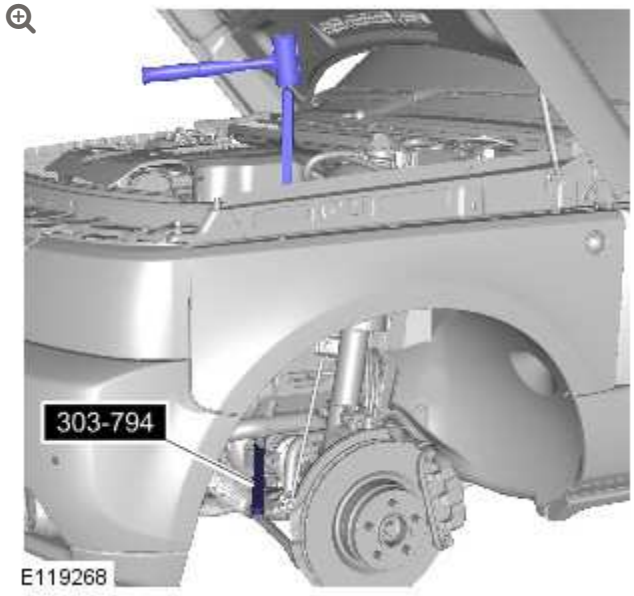

Special Tool(s): 308-794

5.

NOTE:

Make sure that this component is installed to the noted removal position.

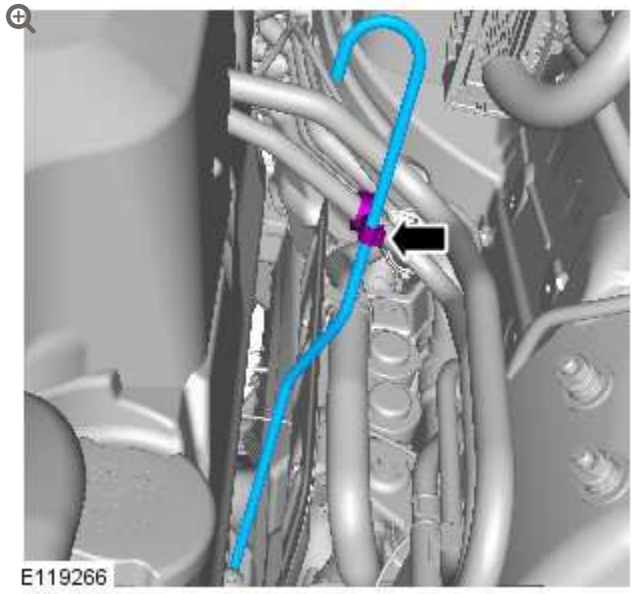

6.

NOTE:

Make sure that this component is installed to the noted removal position.

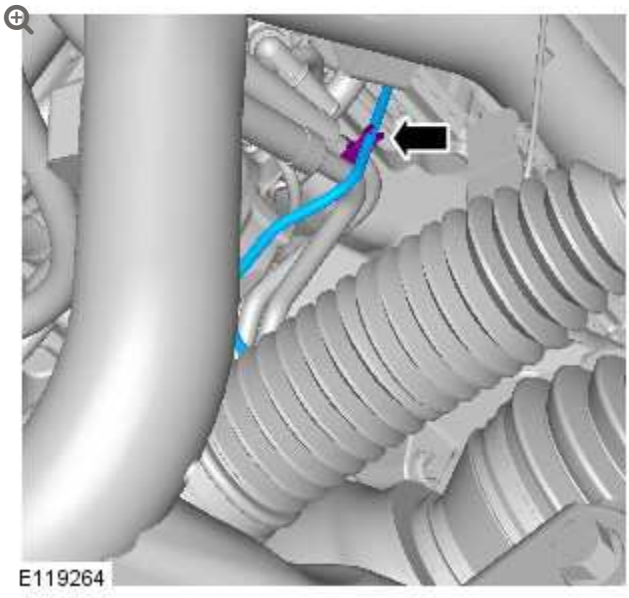

7.

CAUTION:

Take extra care not to damage the component.

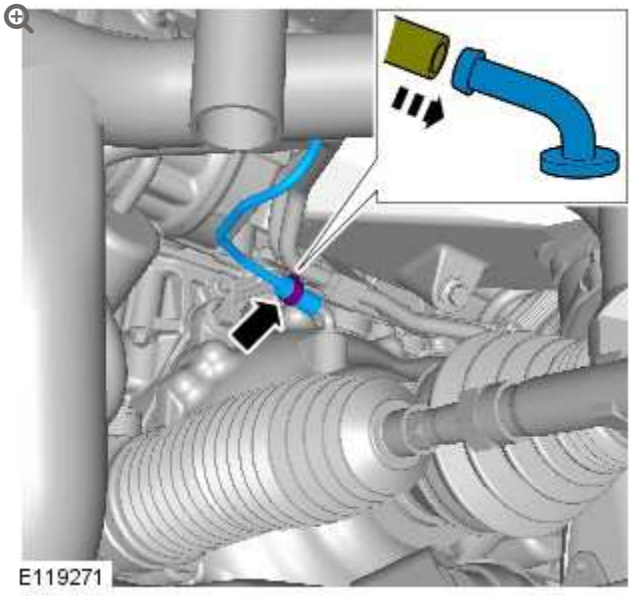

8. Install the LH front wheel and tire.
   Torque: **140 Nm**

9. Connect the battery ground cable.
   Refer to: Specifications (414-00 Charging System - General Information, Specifications).

FRONT DRIVE AXLE/DIFFERENTIAL

DIFFERENTIAL DRAINING AND FILLING (G528132)

GENERAL PROCEDURES

54.15.02	FRONT AXLE - DRAIN AND REFILL	ALL DERIVATIVES	0.4	USED WITHINS

CAUTION:

The fluid filler plug is not a fluid level plug.

1. Raise and support the vehicle.

2. Remove the engine undershield.
   For additional information, refer to: Engine Undershield (501-02, Removal and Installation).

3. Clean the area around the differential case, fluid drain and filler plugs.

4.

WARNING:

Observe due care when draining, as the fluid can be very hot.

NOTE:

Rotate the wheels and tires to drain excess oil collected in the differential casing.



Drain the differential fluid.

- Position a container to collect the fluid.
- Remove the differential case fluid drain plug.
- Allow the fluid to drain.

5. Install the differential case fluid drain plug.
   - Clean the drain plug.
   - Apply sealant to the thread.
   - Tighten the drain plug to 54 Nm (40 lb.ft).

6.



Remove the differential case fluid filler plug.

7.

CAUTIONS:

- The fluid filler plug is not a fluid level plug.
- If a thread of fluid runs/drips from the filler plug hole after refilling, the differential has been overfilled. Drain the fluid and refill with the correct amount.

Fill the front differential case with the correct amount of fluid.

- If the differential has been replaced, fill with 800 ml (1.7 US pints) of fluid.
- If the differential has been drained but not replaced, add 750 ml (1.6 US pints) of fluid.

8. Install the differential case fluid filler plug.
   - Clean the filler plug.
   - Apply sealant to the thread.
   - Tighten the plug to 35 Nm (26 lb.ft).

9.

Install the engine undershield.

For additional information, refer to: Engine Undershield (501-02, Removal and Installation).

FRONT DRIVE AXLE/DIFFERENTIAL

DRIVE PINION SEAL – V8 5.0L PETROL/V8 S/C 5.0L PETROL (G1225390)

IN-VEHICLE REPAIR

51.20.01	OIL SEAL – DRIVE PINION – RENEW	5000 CC, AJ V8	1.5	USED WITHINS	+
54.10.20	OIL SEAL – DRIVE PINION – RENEW	5000 CC, AJ V8	2.3	USED WITHINS	+

SPECIAL TOOL(S)



205-053

Flange holding tool



205-824

Remover drive flange



205-820

Installer - drive pinion oil seal



100-012 (LRT-99-004)

Impulse extractor



100-005A (LRT-99-500A)

General purpose puller

REMOVAL

CAUTION:

The drive pinion seal must only be renewed once.

NOTE:

Some variation in the illustrations may occur, but the essential information is always correct.

1. Disconnect the battery ground cable.
   For additional information, refer to: Specifications (414-00 Charging System - General Information, Specifications).

2. **WARNING:**

   Make sure to support the vehicle with axle stands.

   Raise and support the vehicle.

3. **NOTE:**

   Drain the fluid into a suitable container.

   Drain the differential lubricant.
   For additional information, refer to: Differential Draining and

Filling (205-03 Front Drive Axle/Differential, General Procedures).

4. Remove the front driveshaft.
   For additional information, refer to: Front Driveshaft - 5.0L NA V8 - AJ133/5.0L SC V8 - AJ133 (205-01 Driveshaft, Removal and Installation).

5. 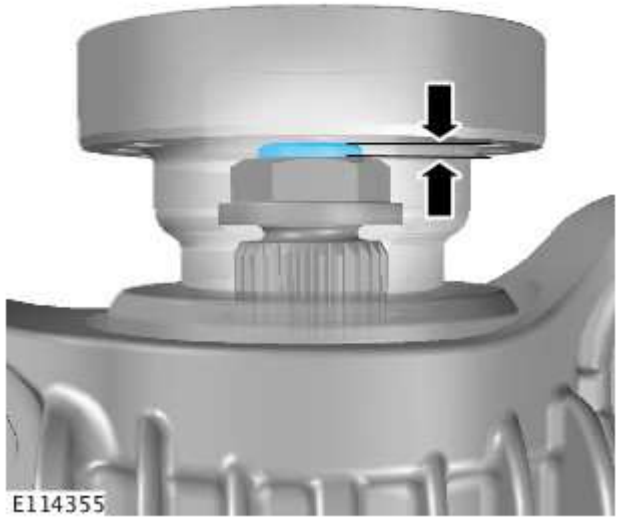

   Measure the depth of the pinion nut on the pinion shaft.

   - Note measurement for installation.

6. **CAUTION:**

   This step must be carried out to make sure that the drive pinion nut is correctly tightend on assembly.

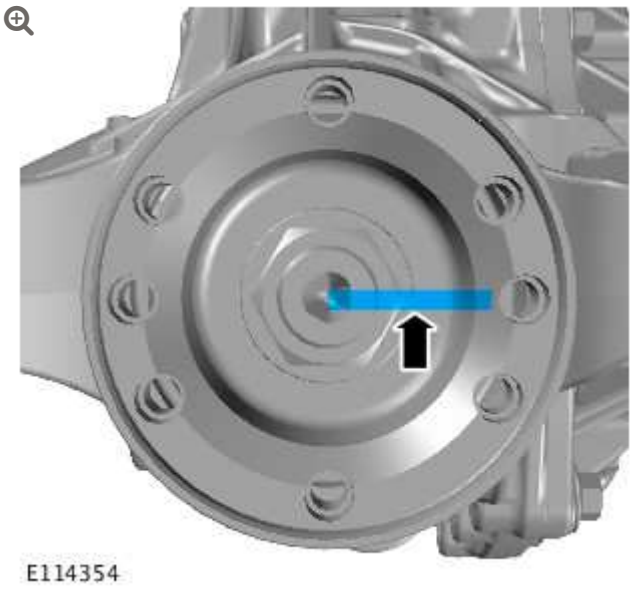

Accurately scribe a line to mark the drive pinion shaft to the drive pinion nut and pinion flange.

7.

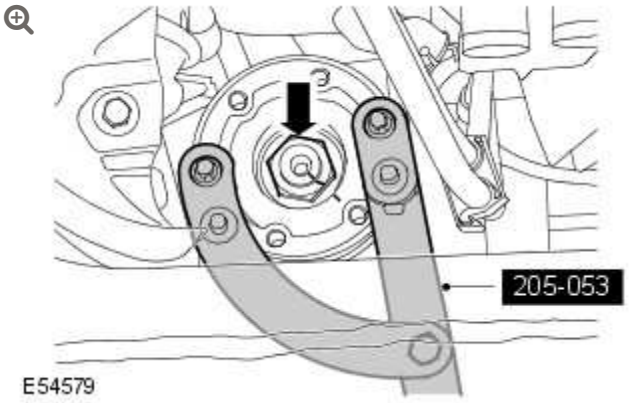

Remove the drive pinion flange retaining nut.

- Using the special tool, counter hold the drive pinion flange.
- Note number of turns for installation.

8.

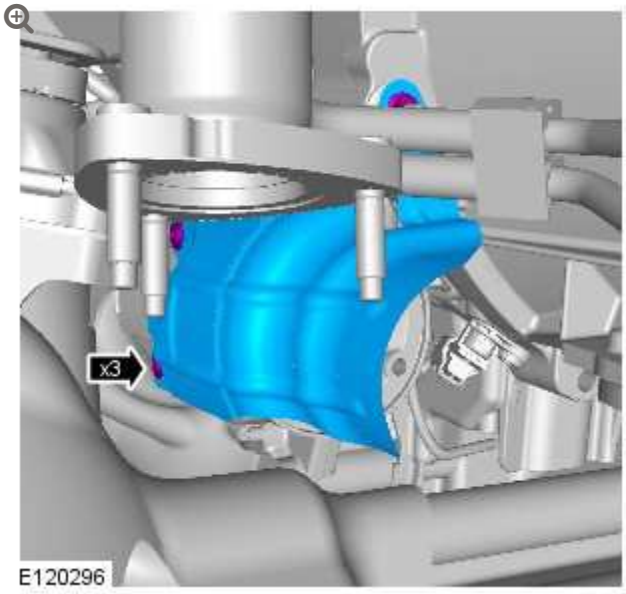

Remove the exhaust heat shield.

9.

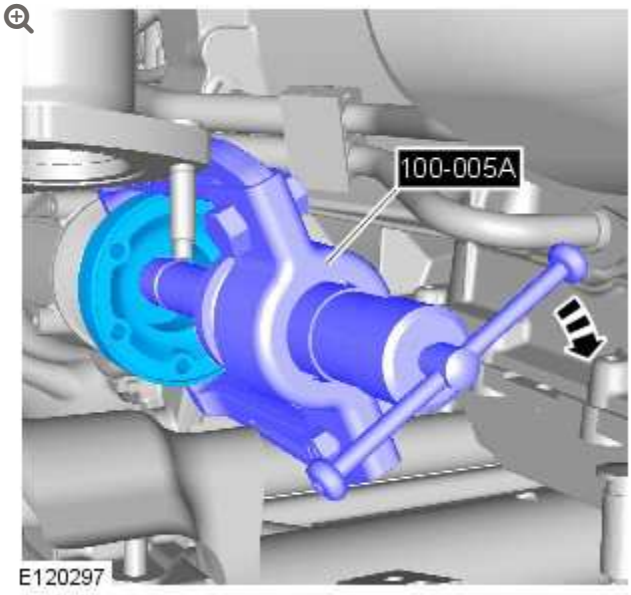

Using the special tool, remove the drive pinion flange.

10.

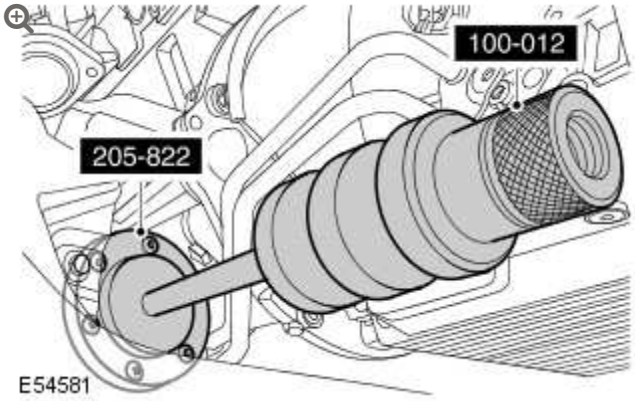

Using the special tool, remove the drive pinion seal.

INSTALLATION

1. Clean the drive pinion flange.

2. Clean the drive pinion seal mating faces.

3. 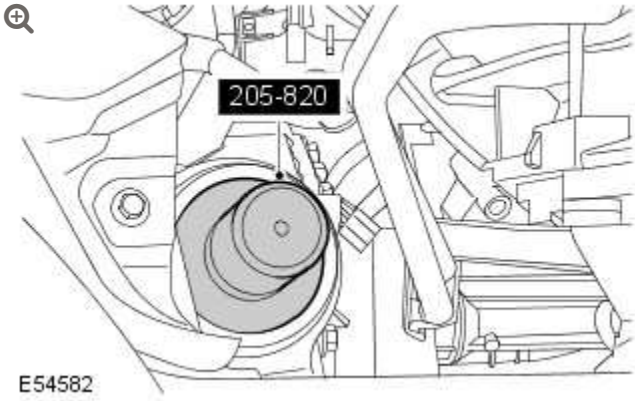

Using the special tool, install the new drive pinion seal.

4. **CAUTION:**

Make sure the drive pinion flange scribed marks are aligned.

Install the drive pinion flange.

5.

CAUTIONS:

- Make sure the mark on the drive pinion nut is never tightened past the scribed mark on the drive pinion shaft.
- Make sure the drive pinion flange has no end float and is free to rotate.
- Make sure the scribed mark on the drive pinion nut is within the tollerance of 5 degrees before the scribed mark on the drive pinion shaft, and up to the scribed mark (zero degrees).

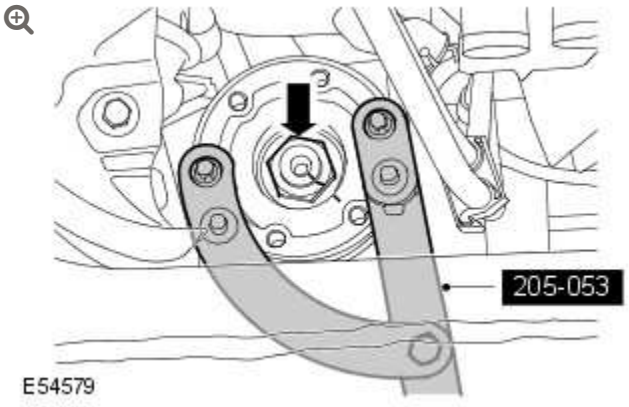

Install the drive pinion flange retaining nut.

- Using the special tool, counter hold the drive pinion flange.
- Install nut to previously noted number of turns.
- Measure the depth of the pinion nut on the pinion shaft.

6.

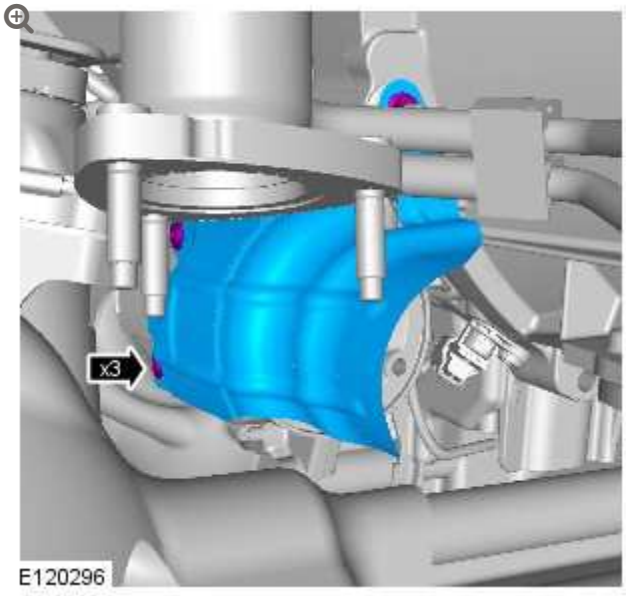

Install the exhaust heat shield.

- TORQUE: 10 Nm

7. Install the front driveshaft.
   For additional information, refer to: Front Driveshaft - 5.0L NA V8 - AJ133/5.0L SC V8 - AJ133 (205-01 Driveshaft, Removal and Installation).

8. **CAUTION:**

   Make sure the correct specification and quanity of oil is used.

   Fill the differential with the correct amount of lubricant.
   For additional information, refer to: Differential Draining and Filling (205-03 Front Drive Axle/Differential, General Procedures).

9. Connect the battery ground cable.
   For additional information, refer to: Specifications (414-00 Charging System - General Information, Specifications).

2012.0 RANGE ROVER (LM), 205-03

FRONT DRIVE AXLE/DIFFERENTIAL

DESCRIPTION AND OPERATION

A

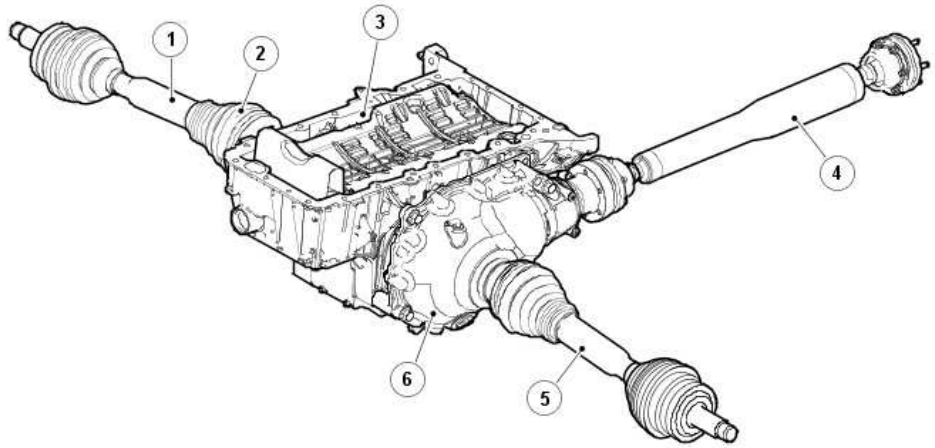

B

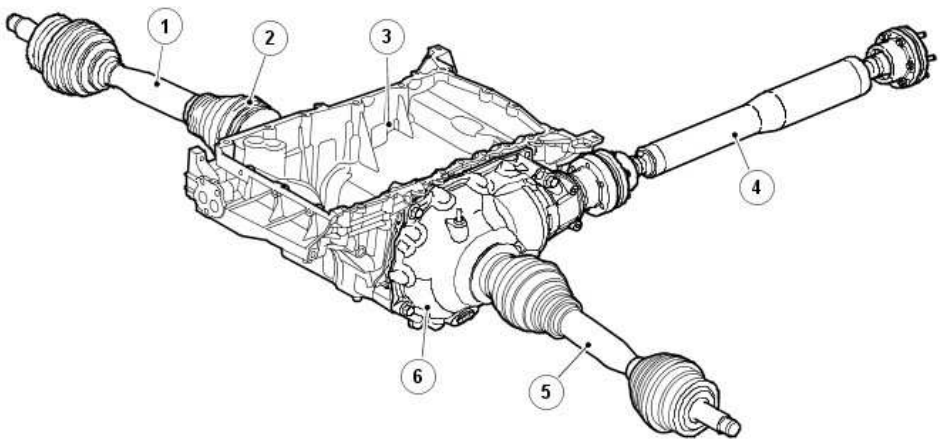

E84164

ITEM	DESCRIPTION
A	Diesel version
B	Gasoline version
1	Front RH drive halfshaft
2	CV joint
3	Engine sump
4	Front drive shaft
5	Front LH drive halfshaft
6	Front differential

OVERVIEW

The front differential converts the 'angle of drive' through 90 degrees and distributes drive, via the drive halfshafts, to the front wheels.

The front differential is mounted on the LH side of the vehicle sump. The sump has a cast tube through it, which allows for the fitment of the RH drive halfshaft and separates the engine oil from the differential oil. The differential unit is secured to the engine sump with 4 bolts. The bolts pass through lugs in the differential casing and are secured into threaded holes in the sump. An O-ring seal is fitted to the casing and locates in the sump to provide a seal between the casing and the sump.

The casing comprises two halves with machined mating faces. When assembled, the iron casing halves are sealed with a thin film of Loctite 574 sealant and secured together with 12 bolts. The LH casing is the carrier for all the rotating parts and the RH casing is a cover to close the unit and a support for the RH carrier bearing. A breather tube is fitted to the casings. This allows a plastic tube to be

fitted and routed to a high point in the engine compartment, preventing the ingress of water when the vehicle is wading.

The LH casing is fitted with a drain plug and a filler plug.

The differential is a conventional design using a hypoid gear layout. This employs a hypoid bevel pinion gear and crown wheel, with the pinion offset above the center line of the crown wheel. This design allows for a larger pinion gear to be used, which has the advantages of increased gear strength and reduced operating noise.

The output ratio of the front differential varies depending on the engine variant.
For additional information, refer to: Specifications (205-03, Specifications).

The ratio is changed by changing the amount of teeth between the crown wheel drive gear and pinion gear. For example, with a ratio of 3.54:1, the crown wheel drive gear will have 3.54 times more teeth than the pinion gear.

The differential comprises a pinion shaft and hypoid bevel gear, a crown wheel drive gear with an integral cage, which houses two planet gears. Two sun wheels are also located in the cage and pass the rotational drive to the drive halfshaft shafts.

The pinion shaft is mounted on two opposed taper roller bearings with a collapsible spacer located between them. The spacer is used to hold the bearings in alignment and collapses at a predetermined rate due the torque applied to the pinion nut. The remaining load is carried as preload in the bearings and is set with the pinion nut to give the desired assembly torque-to-turn. This can only be performed during first assembly when new bearings are coated with friction modifier.

An oil seal is pressed into the LH casing and seals the input flange to the differential unit. The pinion shaft has a hypoid bevel gear at its inner end, which mates with the crown wheel drive gear.

The crown wheel drive gear is located on the carrier and secured with 10 screws. The carrier is mounted on taper roller bearings located in each casing half. The bearings are press fitted into the casing and a spacer is located on the outside face to apply preload to the bearing.

The carrier is fitted with a shaft onto which the two planet gears are mounted. The shaft is secured in the carrier with a roll pin. The sun wheels are located in pockets within the carrier and mesh with the planet gears. Curved plates are located between the carrier and the sun wheels and hold the sun wheels in mesh with the planet gears. Each sun wheel has a machined, splined, bore to accept the drive halfshaft. A groove is machined in the bore to locate the snap ring fitted to the drive halfshaft, providing positive drive halfshaft location.

The operating principles of the front and rear differential are the same.
For additional information, refer to: Rear Drive Axle and Differential (205-02 Rear Drive Axle/Differential, Description and Operation).

2012.0 RANGE ROVER (LM), 205-03

FRONT DRIVE AXLE/DIFFERENTIAL

DIAGNOSIS AND TESTING

For additional information.

REFER to: Rear Drive Axle and Differential (205-02, Diagnosis and Testing).

FRONT DRIVE AXLE/DIFFERENTIAL

SPECIFICATIONS

Lubricants

ITEM	SPECIFICATION
* Recommended lubricant	Castrol SAF-XO - 75W/90
Capacity	0.75 liters refill (1.3 pints) (1.6 US pints)
	0.8 liters from dry (1.4 pints) (1.7 US pints)

*** Do not use any lubricant other than that specified**

Reduction Ratio

MODEL	SPECIFICATION
4.2L	3.73:1
4.4L	3.73:1
5.0L	3.54:1
3.6L Diesel engine	3.54:1

Torque Specifications

DESCRIPTION	BOLT LENGTH	NM	LB-FT
Oil drain plug	-	54	40

DESCRIPTION	BOLT LENGTH	NM	LB-FT
Oil filler plug	-	34	25
Front drive axle/differential to engine sump bolts	**100 mm**	-	
	Stage 1	50	37
	Stage 2	90°	90°
	55 mm		-
	Stage 1	50	37
	Stage 2	60°	60°
*** Driveshaft to front axle drive flange Torx bolts:**	-	-	
	Stage 1	45	33
	Stage 2	Further 90°	Further 90°

*** New 'Patchlok' Torx bolts must be installed**

FRONT DRIVE HALFSHAFTS

SPECIFICATIONS

General Specification

ITEM	SPECIFICATION
Type	Fully floating, fixed length, solid shafts incorporating constant velocity joints at each end of shaft

Lubricant

ITEM	SPECIFICATION
Outboard joint	Use grease supplied with replacement boot kit
Inboard joint	Use grease supplied with replacement boot kit

General Specification

Item	Specification
Type	Fully floating, solid shafts incorporating 'plug-in' constant velocity joint at inboard end and fixed constant velocity joint at outboard end of shaft

Torque Specifications

DESCRIPTION	NM	LB-FT
* Stabilizer bar link nut	100	74

DESCRIPTION	NM	LB-FT
* Stabilizer link nut	100	74
* Tie rod end ball joint nut	80	59
*+ Halfshaft retaining nut	420	311
Road wheel nuts	140	103

*** New nut must be fitted**

+ Stake nut on completion

2012.0 RANGE ROVER (LM), 205-04

FRONT DRIVE HALFSHAFTS

DIAGNOSIS AND TESTING

For additional information.

REFER to: Driveline System (205-00, Diagnosis and Testing).

FRONT DRIVE HALFSHAFTS

DESCRIPTION AND OPERATION

Front Drive Halfshaft Components

NOTE:

4.2/4.4L V8 petrol version shown

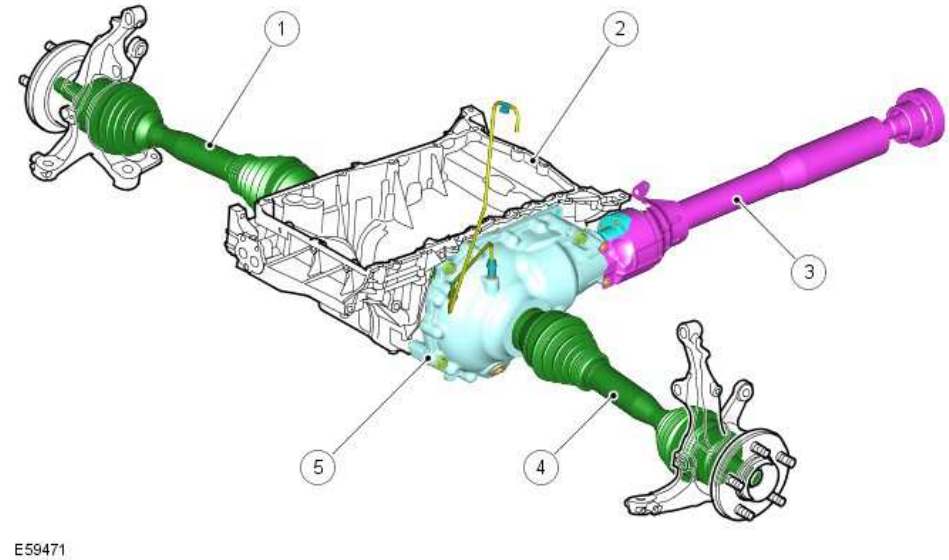

ITEM	DESCRIPTION
1	Front RH drive halfshaft
2	Engine sump

ITEM	DESCRIPTION
3	Front driveshaft
4	Front LH drive halfshaft
5	Front differential

GENERAL

The front drive halfshafts are handed components with the RH drive halfshaft being longer than the LH drive halfshaft. Both shafts are of similar construction with constant velocity (CV) joints at each end to allow for steering and suspension movement.

The front drive halfshafts are similar in their construction. The only difference is the lengths of each shaft. The LH drive halfshaft has a total length of 677 mm. The RH drive halfshaft is a longer shaft, which passes through a housing and the engine sump to the differential and has a total length of 1024 mm.

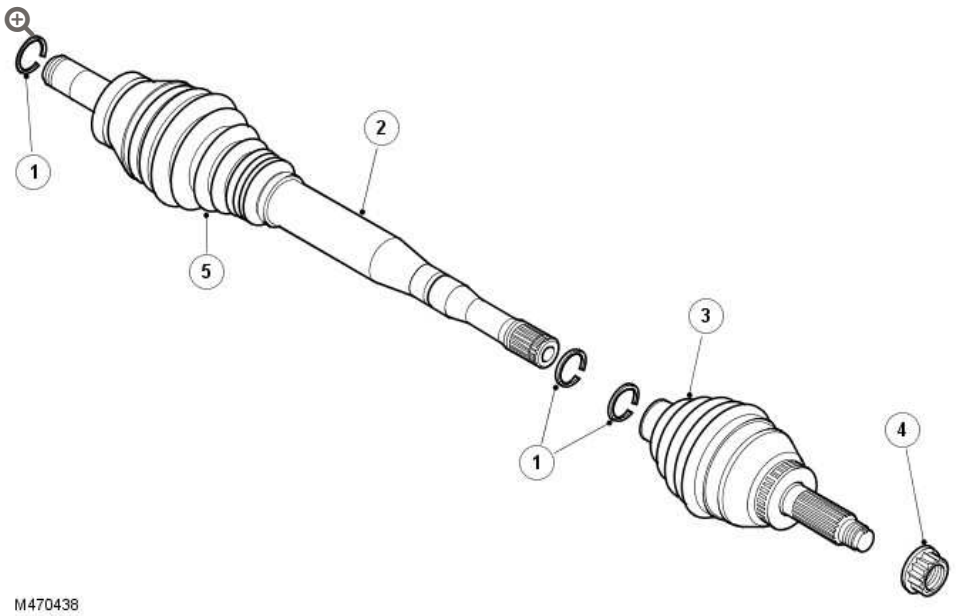

ITEM	DESCRIPTION
1	Snap ring (3 off)
2	Drive shaft

ITEM	DESCRIPTION
3	Outer CV joint
4	Stake nut
5	Inner CV joint.

The outer CV joint has a target on the outer diameter. This is used by the ABS wheel speed sensor for vehicle and wheel speed calculations.For additional information, refer to: (206-09A Anti-Lock Control - Traction Control)

Anti-Lock Control - Traction Control (Description and Operation),
Anti-Lock Control - Traction Control - 4.2L (Description and Operation),
Anti-Lock Control - Traction Control - 4.4L (Description and Operation).

Each drive halfshaft comprises 2 CV joints and gaiters, an outer tube, a solid shaft and a ball cage assembly.

FRONT DRIVE HALFSHAFTS

FRONT HALFSHAFT LH – VEHICLES WITH: HIGH PERFORMANCE BRAKES

(G1225751)

REMOVAL AND INSTALLATION

47.10.01	SHAFT WITH BOTH JOINTS - RENEW	ALL DERIVATIVES	1.6	USED WITHINS	+

SPECIAL TOOL(S)



211-314 (LRT-57-036)

Ball joint separator



205-754 (LRT-54-027)

Ball joint separator



204-506/3 (LRT-60-030/3)

Halfshaft remover/replacer



204-506/1 (LRT-60-030/1)

Halfshaft remover/replacer



204-506/2 (LRT-60-030/2)

Halfshaft remover/replacer



204-506/5 (LRT-60-030/5)

Retainers - halfshaft remover/replacer



205-735 (LRT-54-026)

Remover halfshaft inboard joint



308-005 (LRT-37-004/2)

Axle oil seal remover



308-626/1

Installer halfshaft oil seal



308-626/2

Installer/Guide halfshaft oil seal



204-506/4

Installer, Halfshaft

REMOVAL

NOTE:

Some variation in the illustrations may occur, but the essential information is always correct.

1. Disconnect the battery ground cable.
   For additional information, refer to: Specifications (414-00 Battery and Charging System - General Information, Specifications).

2.

WARNING:

Make sure to support the vehicle with axle stands.

Raise the front of the vehicle.

3. Remove the LH front wheel and tire.

4. 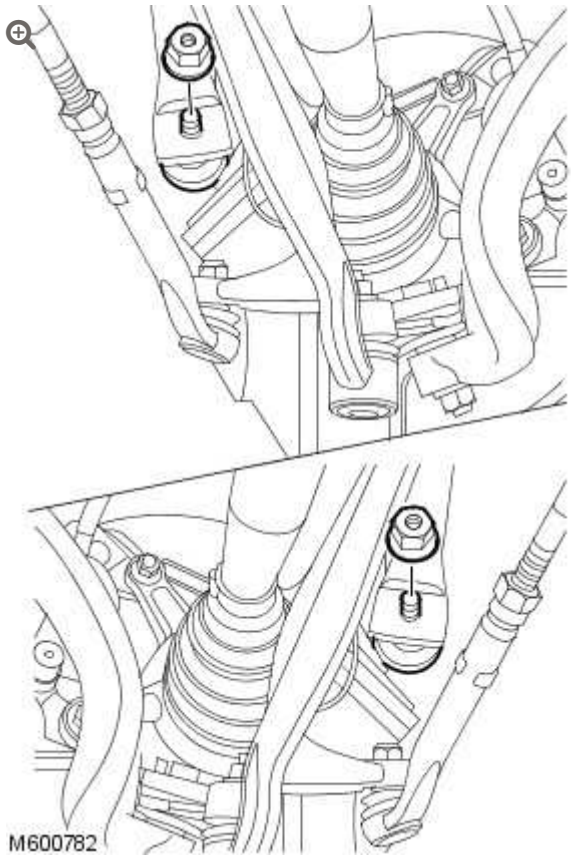

Release the stabilizer bar links from the stabilizer bar.

- Remove the 2 nuts.

5.

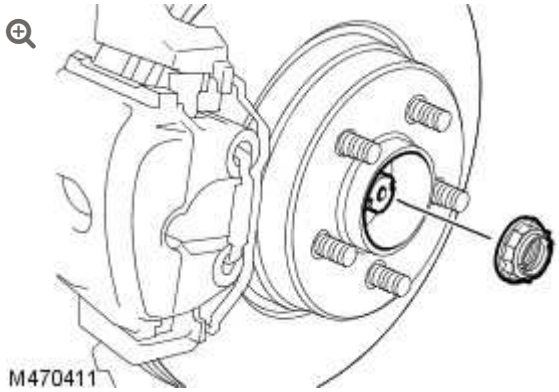

With assistance, remove and discard the halfshaft nut.

6. Remove the LH front brake disc.
   For additional information, refer to: Brake Disc - Vehicles With: High Performance Brakes (206-03 Front Disc Brake, Removal and Installation).

7. 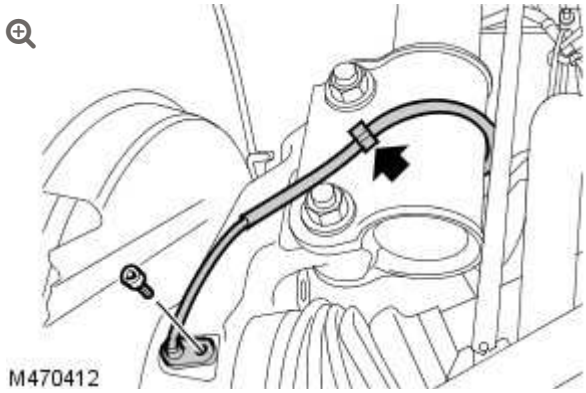

   Release the LH front anti-lock brake system (ABS) sensor and wiring harness.

   - Release the clip.
   - Remove the bolt.

8.

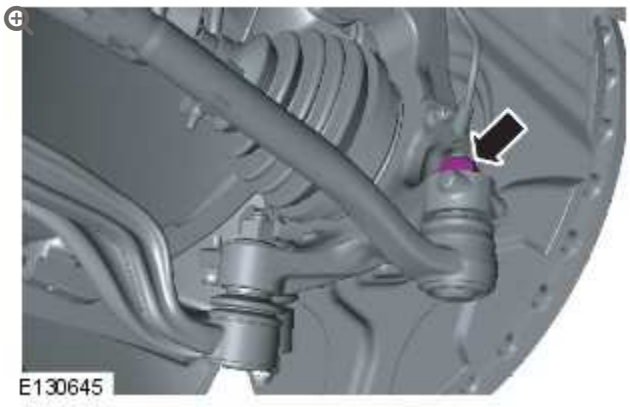

Loosen the LH tie rod end locking nut.

9.

CAUTION:

Make sure the ball joint seal is not damaged. A damaged seal will lead to the premature failure of the joint.

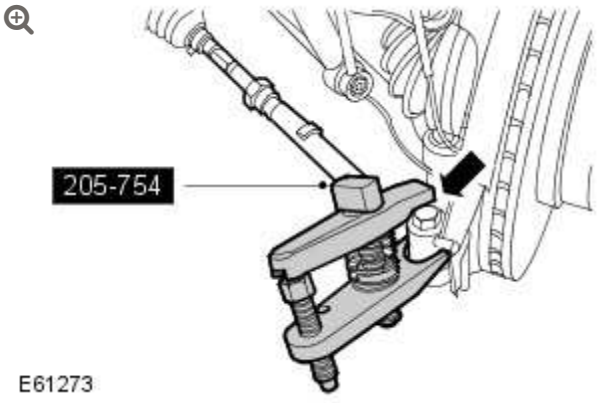

Using the special tool release the LH tie rod end.

- Remove and discard the nut.

10.

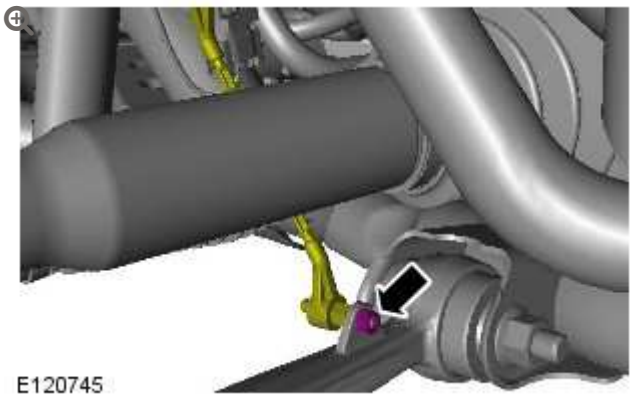

LH side front: Release the suspension height sensor.

11.

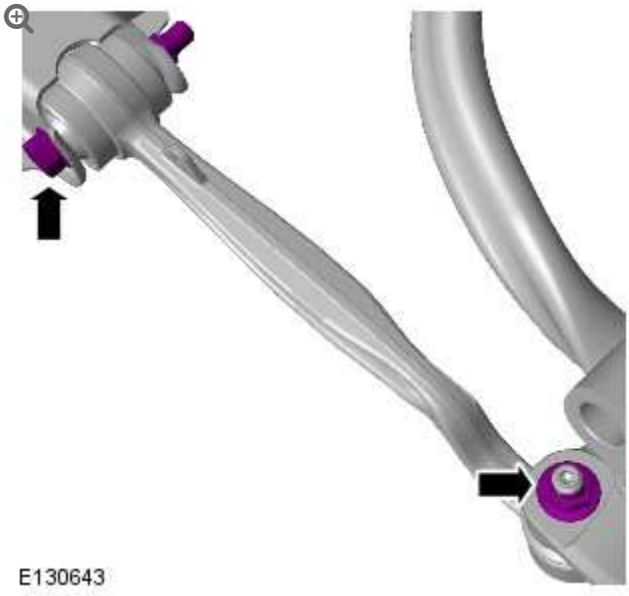

Loosen the front lower arm retaining nut and bolt.

- Loosen the lower arm ball joint retaining nut.

12.

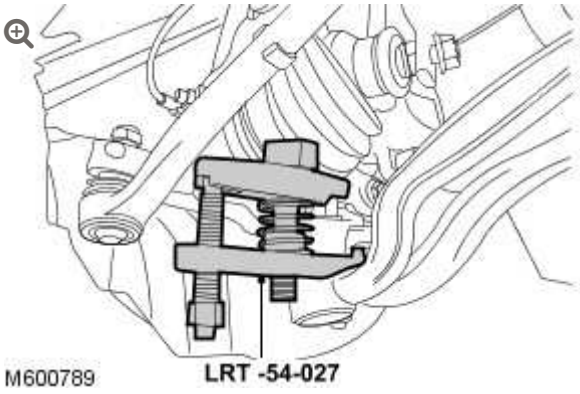

Using the special tool release the LH front lower arm.

- Remove the nut.

13.

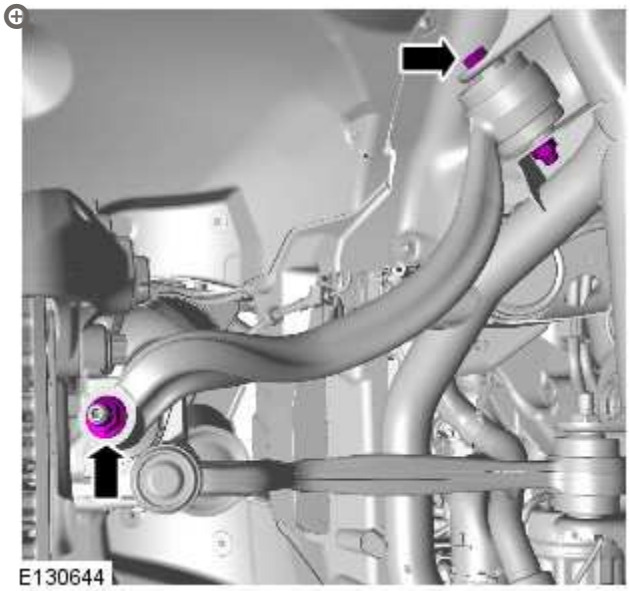

Loosen the rear lower arm retaining nut and bolt.

- Loosen the lower arm ball joint retaining nut.

14.

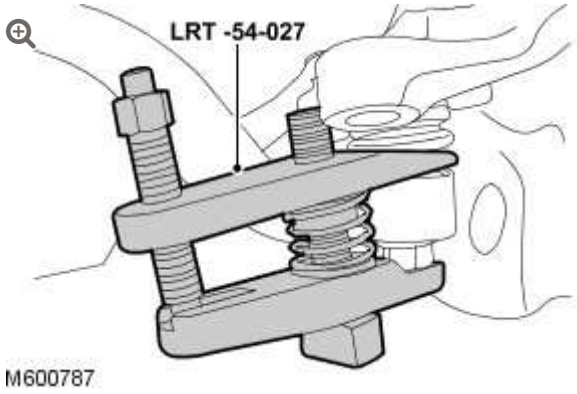

Using the special tool release the LH rear lower arm.

- Remove the nut.

15. **CAUTION:**

> Do not use a hammer to detach the halfshaft from the hub assembly, failure to follow this instruction may result in damage to the halfshaft.

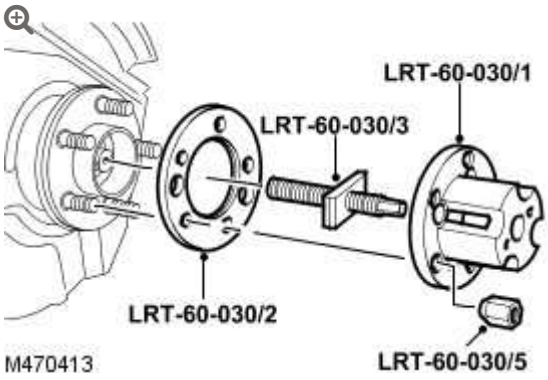

Using the special tools, release the halfshaft from the wheel hub.

16. Remove the special tools.

17. Position a container to collect the fluid spillage.

18. 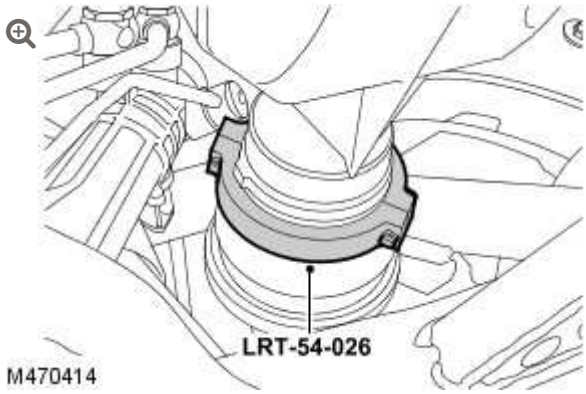

    Install the special tool, to the inner halfshaft joint.

19. LH front: Release the halfshaft from the differential housing.

20. Release the halfshaft from the wheel hub.

21. Remove the halfshaft.

    - Remove the special tool.

22.

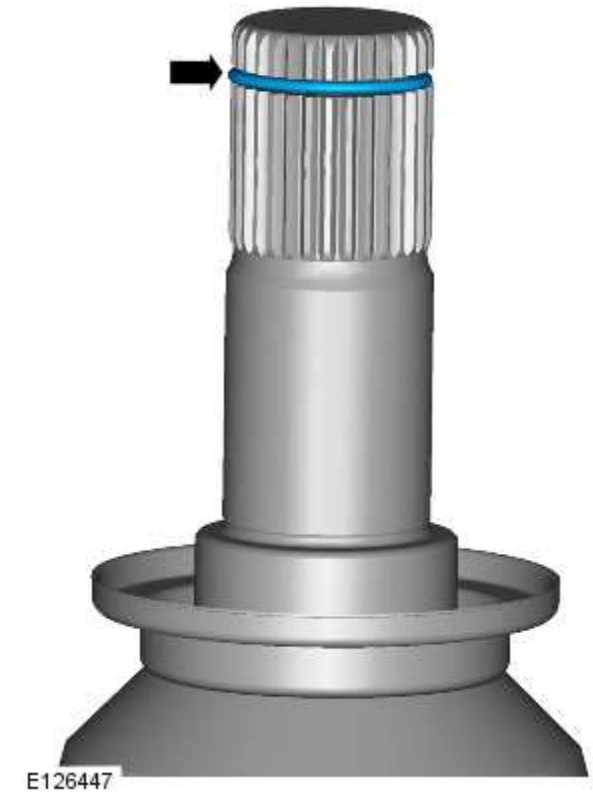

Remove and discard the clip from the LH halfshaft.

23.

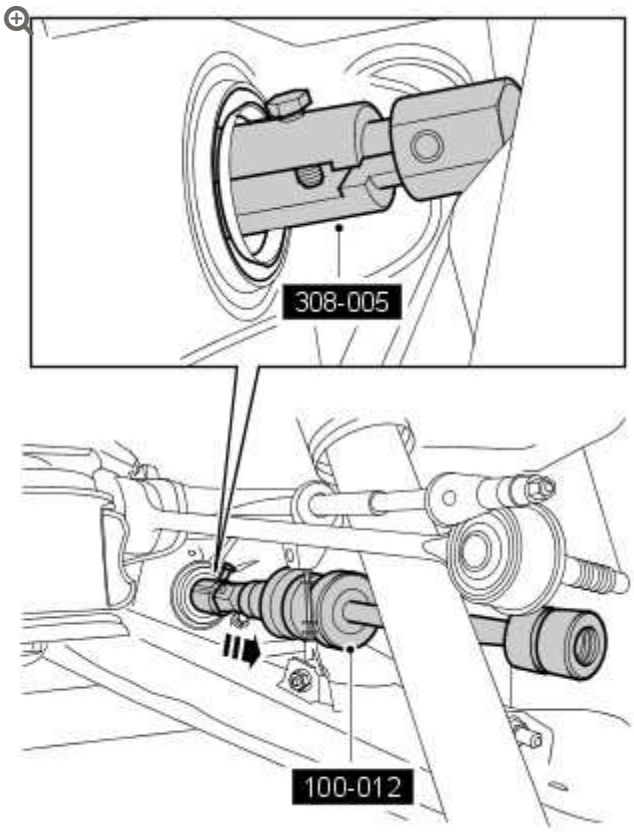

Using the special tools, remove and discard the halfshaft seal.

INSTALLATION

1.

CAUTION:

The seal protector must be left in place until the halfshaft has been installed.

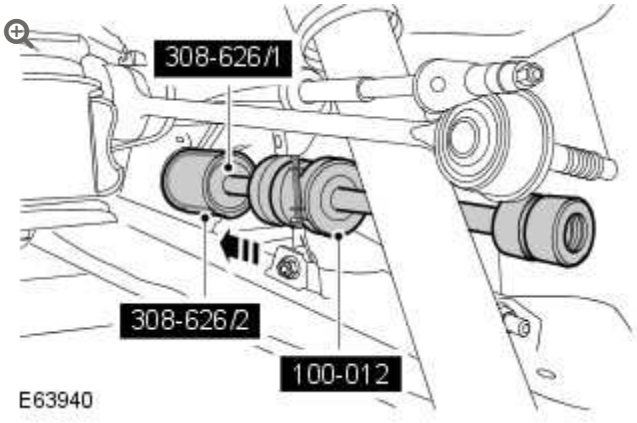

Using the special tools, install a new halfshaft seal.

- Clean the component mating faces.

2. Install a new clip to the LH halfshaft.

3. Reposition the stabilizer bar.

4. **CAUTION:**

   Pull on the halfshaft inboard joint to make sure the clip has fully engaged and retains the halfshaft inboard joint within the differential case.

   Install the halfshaft.

   - Lubricate the oil seal.

5. Locate the halfshaft in the wheel hub.

   - Lightly lubricate the halfshaft splines.
   - Clean the halfshaft and wheel hub splines.

6.

CAUTION:

Install the halfshaft nut finger tight.

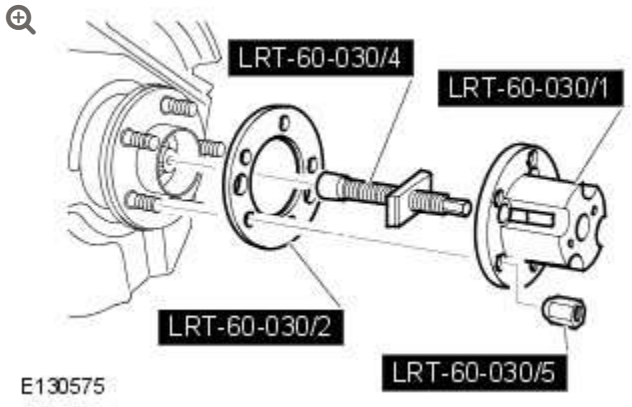

Using the special tools, pull the halfshaft in to the wheel hub.

7. Remove the special tools.

8. **CAUTION:**

Nuts and bolts must be tightened with the weight of the vehicle on the suspension.

Secure the LH rear lower arm.

- Tighten the nut to 80 Nm (59 lb.ft).
- Tighten the rear lower arm nut and bolt to 165 Nm (122 lb.ft) plus a further 90 degrees.

9. **CAUTION:**

Nuts and bolts must be tightened with the weight of the vehicle on the suspension.

Secure the LH front lower arm.

- Tighten the nut to 80 Nm (59 lb.ft).
- Tighten the lower arm nut and bolt to 165 Nm (122 lb.ft) plus a further 90 degrees.

10. LH side front: Secure the suspension height sensor.
    - Install the nut and tighten to 7 Nm (5 lb.ft).

11. Secure the LH tie rod end.
    - Install new nut and and tighten to 80 Nm (59 lb.ft).

12. Secure the LH front ABS sensor and wiring harness.
    - Apply anti-seize compound to the ABS sensor.
    - Tighten the bolt to 8 Nm (6 lb.ft)
    - Secure in the clip.

13. Install the LH front brake disc.
    For additional information, refer to: Brake Disc - Vehicles With: High Performance Brakes (206-03 Front Disc Brake, Removal and Installation).

14. **CAUTION:**

    Do not use air tools to install the nut. Failure to follow this instruction may result in damage to the component.

    With assistance tighten the wheel hub nut to 420Nm (311 lb.ft).
    - Use a new nut.
    - Stake the nut to the halfshaft.

15. Secure the stabilizer bar links.
    - Tighten the nuts to 100 Nm (74 lb.ft).

16. Install the LH front road wheel and tire.
    - Tighten the wheel nuts to 140 Nm (103 lb.ft).

17. Check and top-up the differential case.

18. Check, and if necessary, adjust the wheel alignment.
    For additional information, refer to: Four-Wheel Alignment (204-00 Suspension System - General Information, General Procedures).

19. Connect the battery ground cable.
    For additional information, refer to: Specifications (414-00 Battery and Charging System - General Information, Specifications).

FRONT DRIVE HALFSHAFTS

FRONT HALFSHAFT LH – VEHICLES WITHOUT: HIGH PERFORMANCE BRAKES

(G1225754)

REMOVAL AND INSTALLATION

47.10.01	SHAFT WITH BOTH JOINTS - RENEW	ALL DERIVATIVES	1.6	USED WITHINS	+

SPECIAL TOOL(S)



211-314 (LRT-57-036)

Ball joint separator



205-754 (LRT-54-027)

Ball joint separator



204-506/3 (LRT-60-030/3)

Halfshaft remover/replacer



204-506/1 (LRT-60-030/1)

Halfshaft remover/replacer



204-506/2 (LRT-60-030/2)

Halfshaft remover/replacer



204-506/5 (LRT-60-030/5)

Retainers - halfshaft remover/replacer



205-735 (LRT-54-026)

Remover halfshaft inboard joint



308-005 (LRT-37-004/2)

Axle oil seal remover



308-626/1

Installer halfshaft oil seal



308-626/2

Installer/Guide halfshaft oil seal



204-506/4

Installer, Halfshaft

REMOVAL

NOTE:

Some variation in the illustrations may occur, but the essential information is always correct.

1. Disconnect the battery ground cable.
   For additional information, refer to: Specifications (414-00 Battery and Charging System - General Information, Specifications).

2.

WARNING:

Make sure to support the vehicle with axle stands.

Raise the front of the vehicle.

3. Remove the LH front wheel and tire.

4. 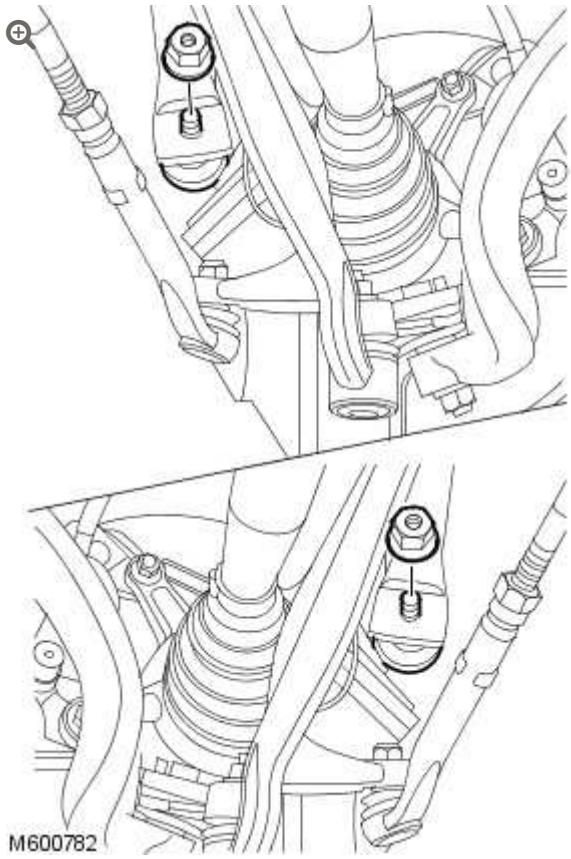

Release the stabilizer bar links from the stabilizer bar.

- Remove the 2 nuts.

5.

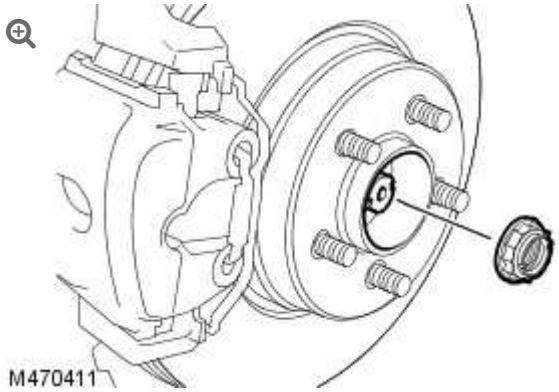

With assistance, remove and discard the halfshaft nut.

6. Remove the LH front brake disc.
   For additional information, refer to: Brake Disc - Vehicles With: Standard Brakes (206-03 Front Disc Brake, Removal and Installation).

7. 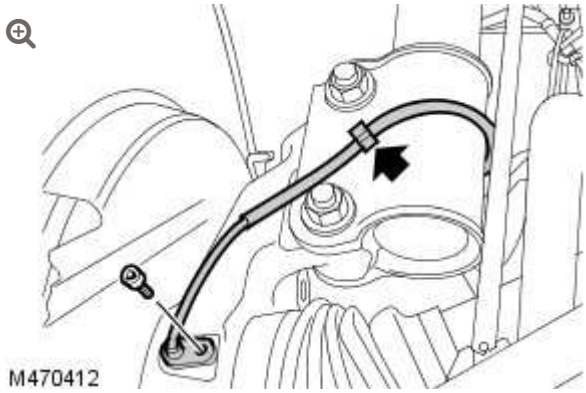

   Release the LH front anti-lock brake system (ABS) sensor and wiring harness.

   - Release the clip.
   - Remove the bolt.

8.

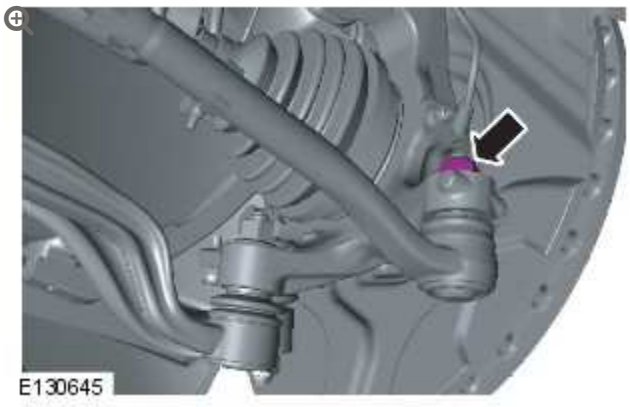

Loosen the LH tie rod end locking nut.

9.

CAUTION:

Make sure the ball joint seal is not damaged. A damaged seal will lead to the premature failure of the joint.

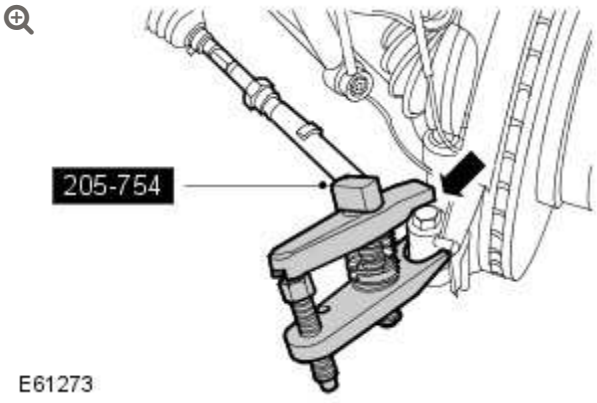

Using the special tool release the LH tie rod end.

- Remove and discard the nut.

10.

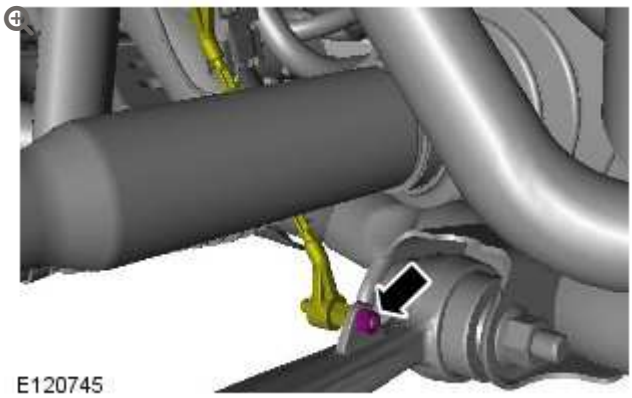

LH side front: Release the suspension height sensor.

11.

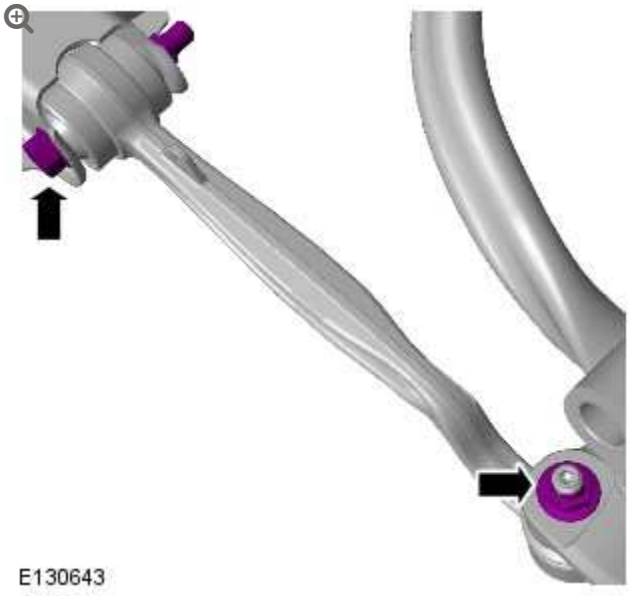

Loosen the front lower arm retaining nut and bolt.

- Loosen the lower arm ball joint retaining nut.

12.

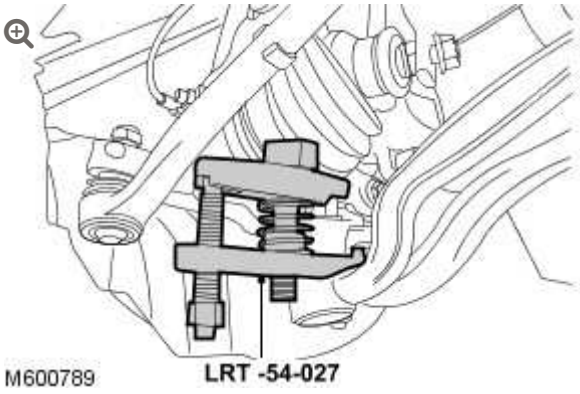

Using the special tool release the LH front lower arm.

- Remove the nut.

13.

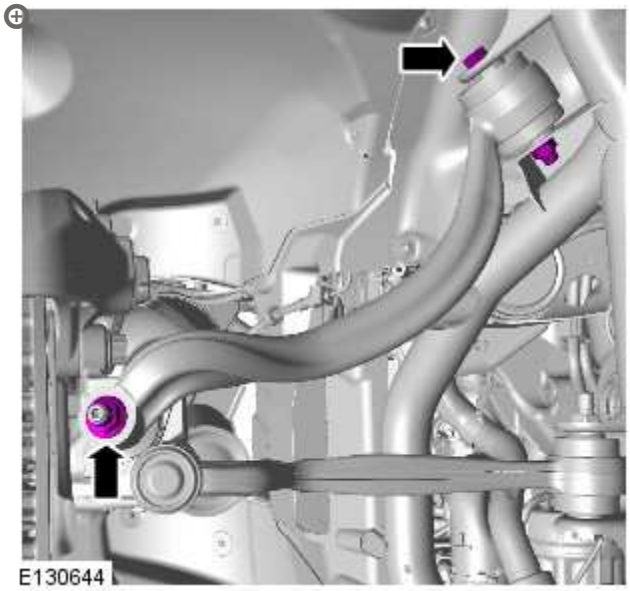

Loosen the rear lower arm retaining nut and bolt.

- Loosen the lower arm ball joint retaining nut.

14.

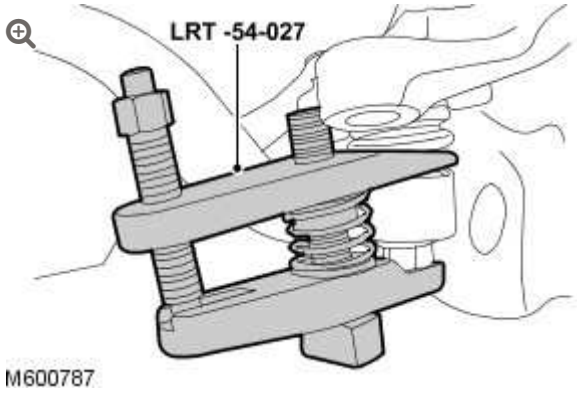

Using the special tool release the LH rear lower arm.

- Remove the nut.

15. **CAUTION:**

> Do not use a hammer to detach the halfshaft from the hub assembly, failure to follow this instruction may result in damage to the halfshaft.

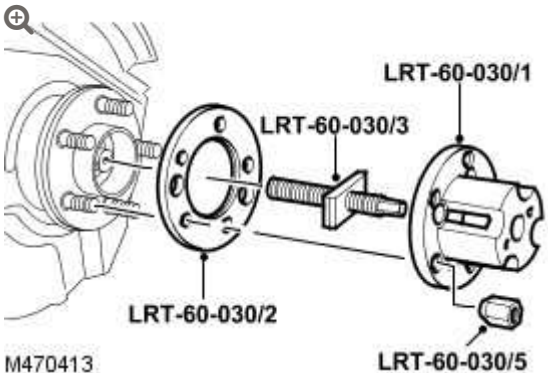

Using the special tools, release the halfshaft from the wheel hub.

16. Remove the special tools.

17. Position a container to collect the fluid spillage.

18. 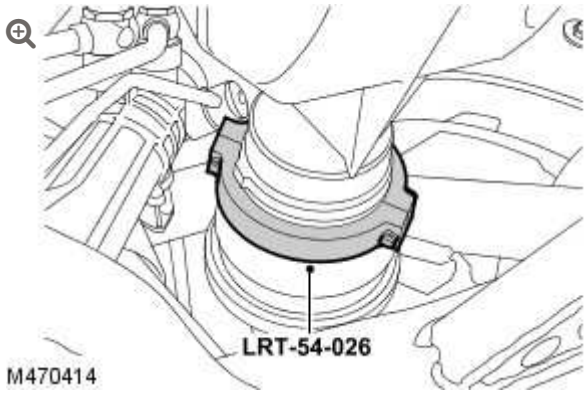

    Install the special tool, to the inner halfshaft joint.

19. LH front: Release the halfshaft from the differential housing.

20. Release the halfshaft from the wheel hub.

21. Remove the halfshaft.

    - Remove the special tool.

22.

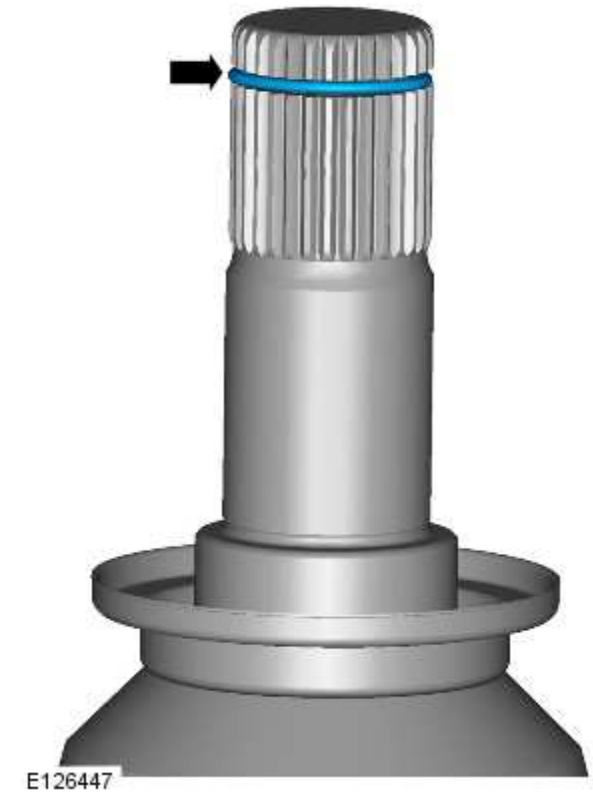

Remove and discard the clip from the LH halfshaft.

23.

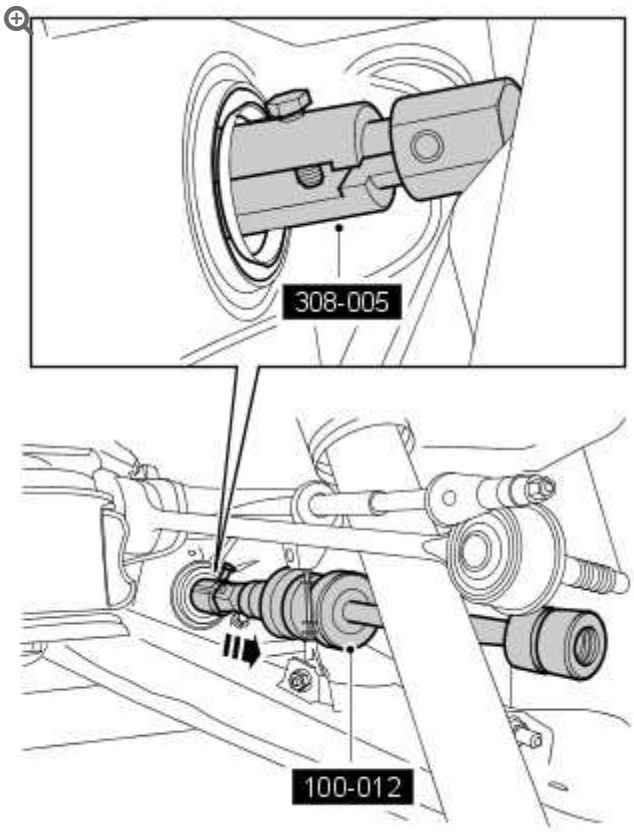

Using the special tools, remove and discard the halfshaft seal.

INSTALLATION

1.

CAUTION:

The seal protector must be left in place until the halfshaft has been installed.

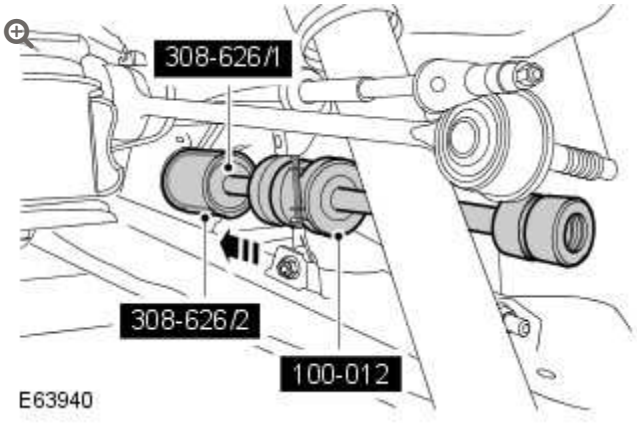

Using the special tools, install a new halfshaft seal.

- Clean the component mating faces.

2. Install a new clip to the RH halfshaft.

3. Reposition the stabilizer bar.

4. **CAUTION:**

   Pull on the halfshaft inboard joint to make sure the clip has fully engaged and retains the halfshaft inboard joint within the differential case.

   Install the halfshaft.

   - Lubricate the oil seal.

5. Locate the halfshaft in the wheel hub.
   - Lightly lubricate the halfshaft splines.
   - Clean the halfshaft and wheel hub splines.

6.

CAUTION:

Install the halfshaft nut finger tight.

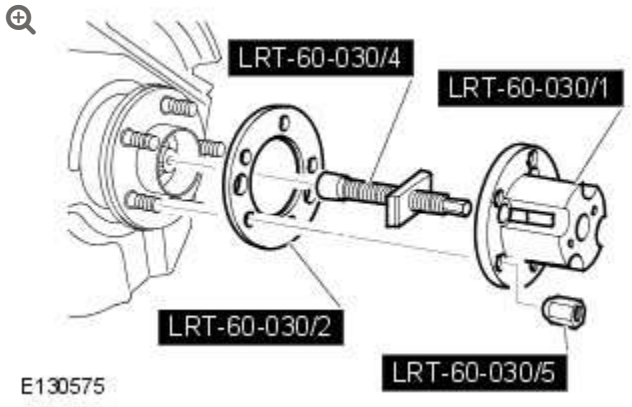

Using the special tools, pull the halfshaft in to the wheel hub.

7. Remove the special tools.

8. **CAUTION:**

Nuts and bolts must be tightened with the weight of the vehicle on the suspension.

Secure the LH rear lower arm.

- Tighten the nut to 80 Nm (59 lb.ft).
- Tighten the rear lower arm nut and bolt to 165 Nm (122 lb.ft) plus a further 90 degrees.

9. **CAUTION:**

Nuts and bolts must be tightened with the weight of the vehicle on the suspension.

Secure the LH front lower arm.

- Tighten the nut to 80 Nm (59 lb.ft).
- Tighten the lower arm nut and bolt to 165 Nm (122 lb.ft) plus a further 90 degrees.

10. LH side front: Secure the suspension height sensor.
    - Install the 2 nuts and tighten to 7 Nm (5 lb.ft).

11. Secure the LH tie rod end.
    - Install new nut and and tighten to 80 Nm (59 lb.ft).

12. Secure the LH front ABS sensor and wiring harness.
    - Apply anti-seize compound to the ABS sensor.
    - Tighten the bolt to 8 Nm (6 lb.ft)
    - Secure in the clip.

13. Install the LH front brake disc.
    For additional information, refer to: Brake Disc - Vehicles With: Standard Brakes (206-03 Front Disc Brake, Removal and Installation).

14. **CAUTION:**

    Do not use air tools to install the nut. Failure to follow this instruction may result in damage to the component.

    With assistance tighten the wheel hub nut to 420Nm (311 lb.ft).
    - Use a new nut.
    - Stake the nut to the halfshaft.

15. Secure the stabilizer bar links.
    - Tighten the nuts to 100 Nm (74 lb.ft).

16. Install the LH front road wheel and tire.
    - Tighten the wheel nuts to 140 Nm (103 lb.ft).

17. Check and top-up the differential case.

18. Check, and if necessary, adjust the wheel alignment.
    For additional information, refer to: Four-Wheel Alignment (204-00 Suspension System - General Information, General Procedures).

19. Connect the battery ground cable.
    For additional information, refer to: Specifications (414-00 Battery and Charging System - General Information, Specifications).

FRONT DRIVE HALFSHAFTS

FRONT HALFSHAFT RH – VEHICLES WITH: HIGH PERFORMANCE BRAKES

(G1225752)

REMOVAL AND INSTALLATION

47.10.02	SHAFT WITH BOTH JOINTS – RH – RENEW	ALL DERIVATIVES	1.8	USED WITHINS	+

SPECIAL TOOL(S)



211-314 (LRT-57-036)

Ball joint separator



205-754 (LRT-54-027)

Ball joint separator



204-506/3 (LRT-60-030/3)

Halfshaft remover/replacer



204-506/1 (LRT-60-030/1)

Halfshaft remover/replacer



204-506/2 (LRT-60-030/2)

Halfshaft remover/replacer



204-506/5 (LRT-60-030/5)

Retainers - halfshaft remover/replacer



205-735 (LRT-54-026)

Remover halfshaft inboard joint



204-506/4

Installer, Halfshaft

REMOVAL

NOTE:

Some variation in the illustrations may occur, but the essential information is always correct.

1. Disconnect the battery ground cable.
   For additional information, refer to: Specifications (414-00 Battery and Charging System - General Information, Specifications).

2. **WARNING:**

   Do not work on or under a vehicle supported only by a jack. Always support the vehicle on safety stands.

   Raise the front of the vehicle.

3. Remove the front road wheels and tires.

4.

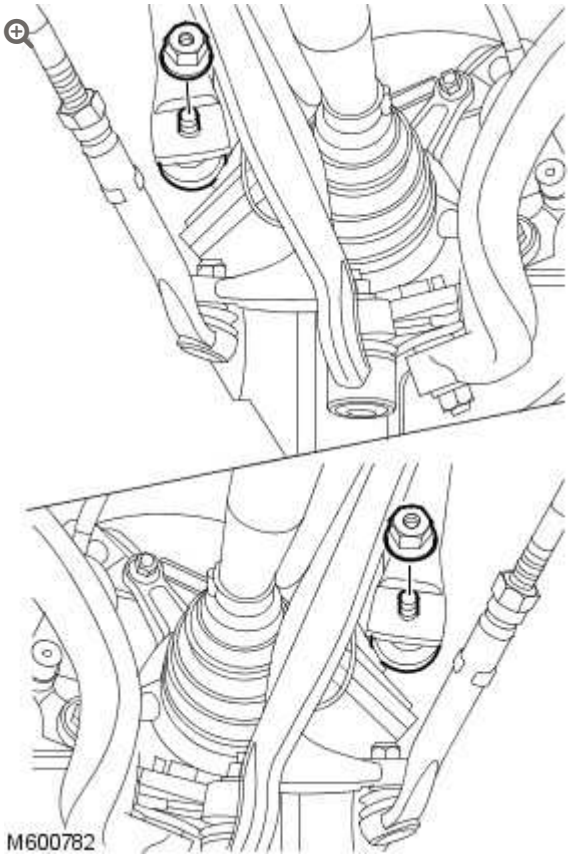

Release the stabilizer bar links from the stabilizer bar.

- Remove the 2 nuts.

5.

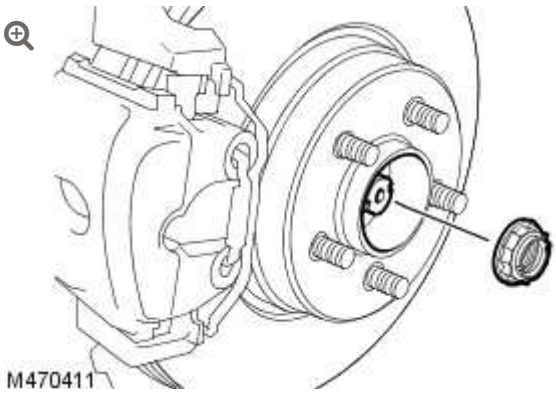

With assistance, remove and discard the halfshaft nut.

6. Remove the RH front brake disc.
   For additional information, refer to: Brake Disc - Vehicles With: High Performance Brakes (206-03 Front Disc Brake, Removal and Installation).

7.

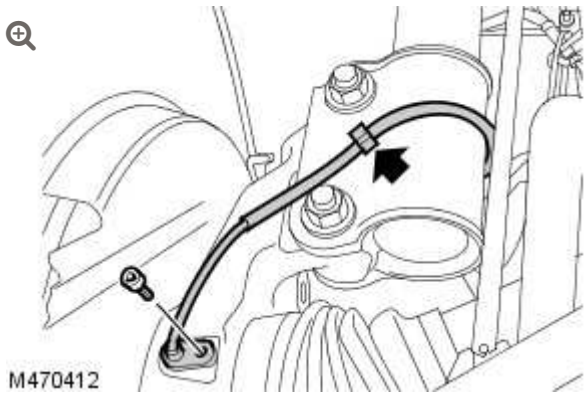

Release the RH front anti-lock brake system (ABS) sensor and wiring harness.

- Release the clip.
- Remove the bolt.

8.

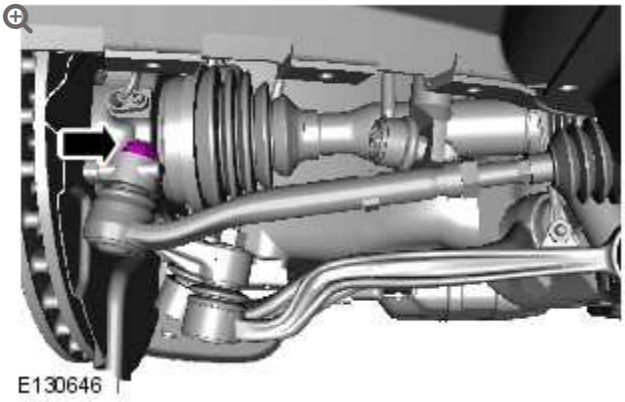

Loosen the RH tie rod end locking nut.

9.

CAUTION:

Make sure the ball joint seal is not damaged. A damaged seal will lead to the premature failure of the joint.

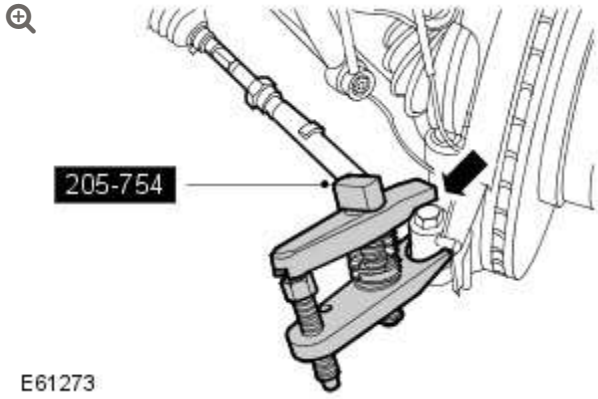

Using the special tool release the RH tie rod end.

- Remove and discard the nut.

10.

NOTE:

LH illustration shown, RH is similar.

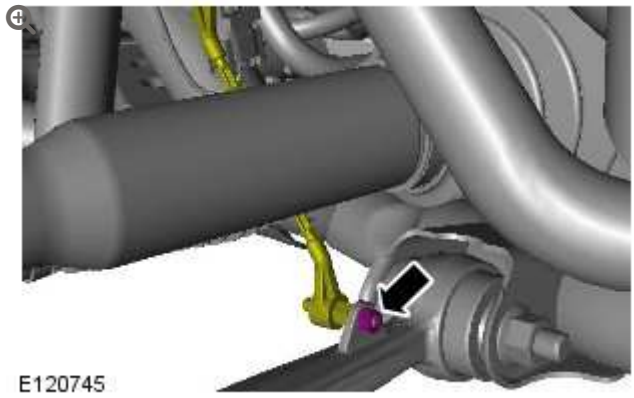

RH side front: Release the suspension height sensor.

11.

NOTE:

LH illustration shown, RH is similar.

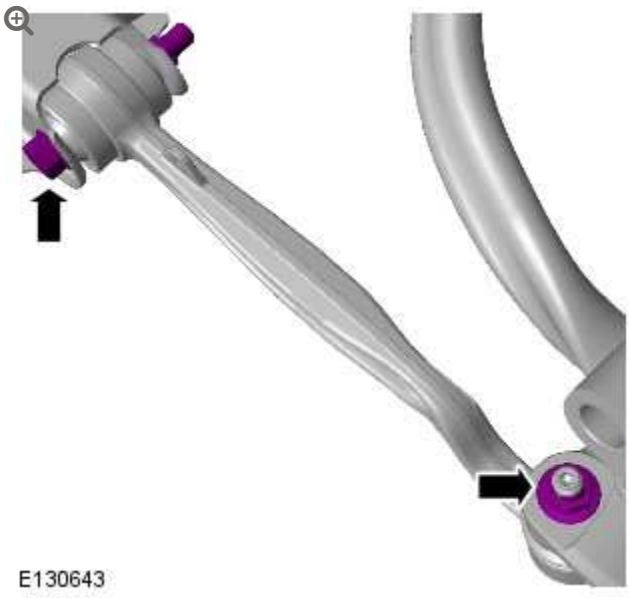

Loosen the front lower arm retaining nut and bolt.

- Loosen the lower arm ball joint retaining nut.

12.

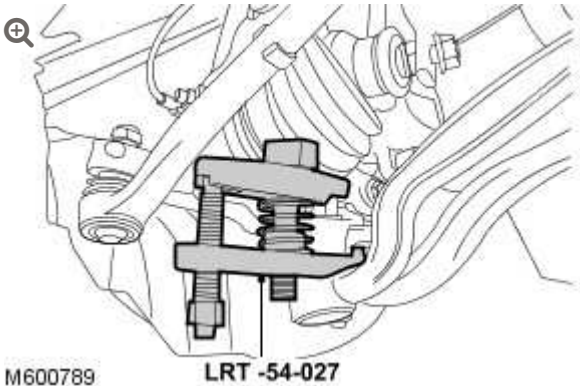

Using the special tool release the RH front lower arm.

- Remove the nut.

13.

NOTE:

LH illustration shown, RH is similar.

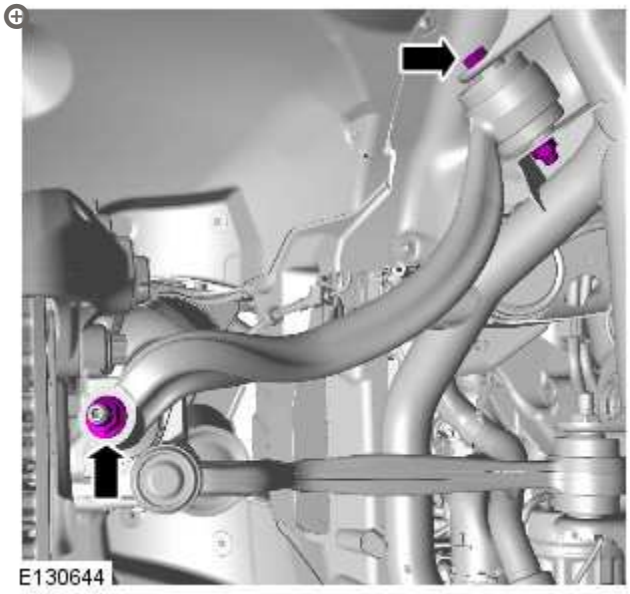

Loosen the rear lower arm retaining nut and bolt.

- Loosen the lower arm ball joint retaining nut.

14.

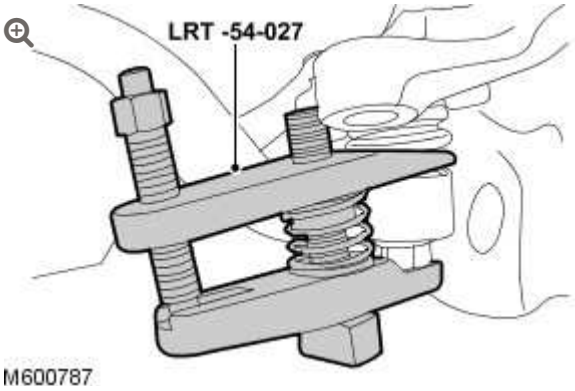

Using the special tool release the RH rear lower arm.

- Remove the nut.

15.

CAUTION:

Do not use a hammer to detach the halfshaft from the hub assembly, failure to follow this instruction may result in damage to the halfshaft.

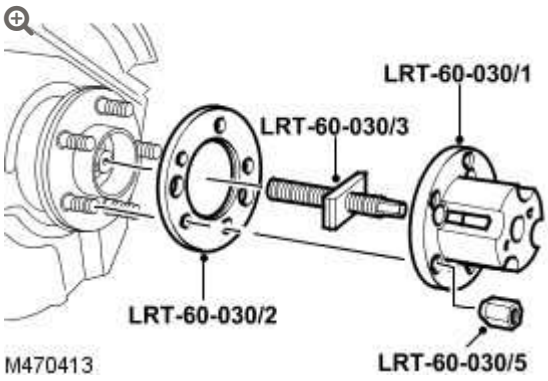

Using the special tools, release the halfshaft from the wheel hub.

16. Remove the special tools.

17. Position a container to collect the fluid spillage.

18. 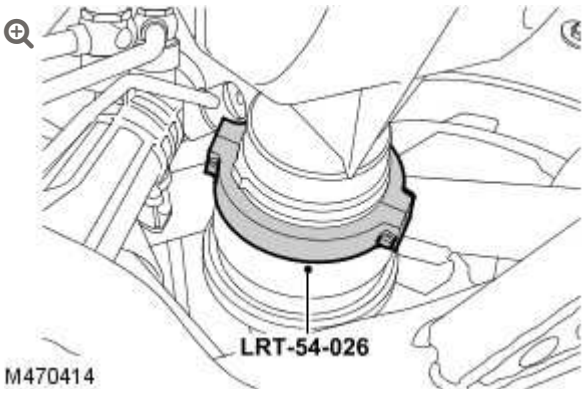

Install the special tool, to the inner halfshaft joint.

19. RH front: Release the halfshaft from the differential housing.

20. Release the halfshaft from the wheel hub.

21. Reposition the stabilizer bar.

22. With assistance, remove the halfshaft.

23.



Remove and discard the clip from the RH halfshaft.

24.

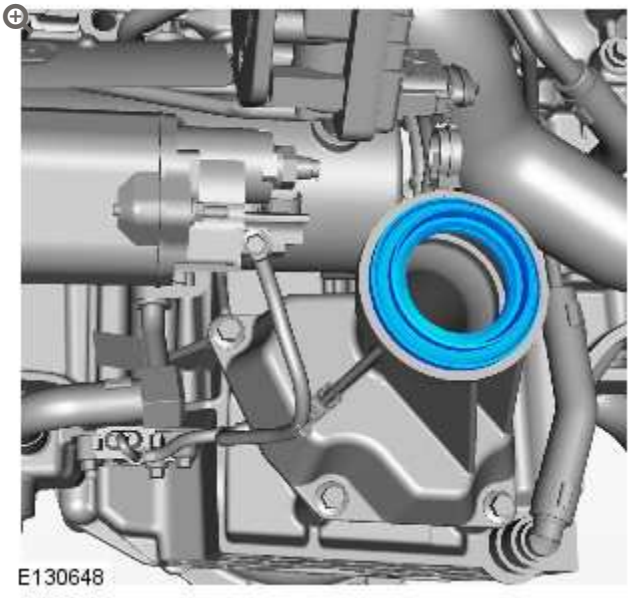

RH front: Remove and discard the halfshaft seal.

INSTALLATION

1. 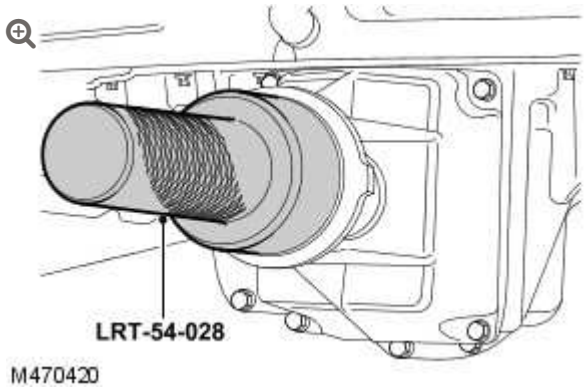

   Using the special tool, install a new halfshaft seal.

   - Lubricate the seal with clean differential fluid.

2. Install a new clip to the RH halfshaft.

3. Reposition the stabilizer bar.

4. **CAUTION:**

   Pull on the halfshaft inboard joint to make sure the clip has fully engaged and retains the halfshaft inboard joint within the differential case.

   With assistance, install the halfshaft.

   - Lubricate the oil seal.

5. Locate the halfshaft in the wheel hub.

   - Lightly lubricate the halfshaft splines.
   - Clean the halfshaft and wheel hub splines.

6.

CAUTION:

Install the halfshaft nut finger tight.

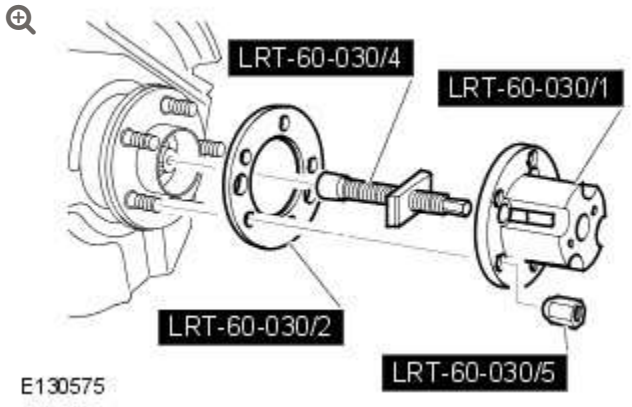

Using the special tools, pull the halfshaft in to the wheel hub.

7. Remove the special tools.

8. **CAUTION:**

Only tighten the nuts and bolts when the suspension is in the normal drive position.

Secure the RH rear lower arm.

- Tighten the nut to 80 Nm (59 lb.ft).
- Tighten the rear lower arm nut and bolt to 165 Nm (122 lb.ft) plus a further 90 degrees.

9. **CAUTION:**

Only tighten the nuts and bolts when the suspension is in the normal drive position.

Secure the RH front lower arm.

- Tighten the nut to 80 Nm (59 lb.ft).
- Tighten the lower arm bolt to 165 Nm (122 lb.ft) plus a further 90 degrees.

10. RH side front: Secure the suspension height sensor.

11. Secure the RH tie rod end.
    - Install a new nut and tighten to 80 Nm (59 lb.ft).

12. Secure the RH front ABS sensor and wiring harness.
    - Apply anti-seize compound to the ABS sensor.
    - Tighten the bolt to 8 Nm (6 lb.ft)
    - Secure in the clip.

13. Install the RH front brake disc.
    For additional information, refer to: Brake Disc - Vehicles With: High Performance Brakes (206-03 Front Disc Brake, Removal and Installation).

14. **CAUTION:**

    Do not use air tools to install the nut. Failure to follow this instruction may result in damage to the component.

    With assistance tighten the wheel hub nut to 420Nm (311 lb.ft).
    - Use a new nut.
    - Stake the nut to the halfshaft.

15. Secure the stabilizer bar links.
    - Tighten the nuts to 100 Nm (74 lb.ft).

16. Install the front wheels and tires.
    - Tighten the wheel nuts to 140 Nm (103 lb.ft).

17. Check and top-up the differential case.

18. Check, and if necessary, adjust the wheel alignment.
    For additional information, refer to: Four-Wheel Alignment (204-00 Suspension System - General Information, General Procedures).

19. Connect the battery ground cable.
    For additional information, refer to: Specifications (414-00 Battery and Charging System - General Information, Specifications).

FRONT DRIVE HALFSHAFTS

FRONT HALFSHAFT RH – VEHICLES WITHOUT: HIGH PERFORMANCE BRAKES

(G1225756)

REMOVAL AND INSTALLATION

47.10.02	SHAFT WITH BOTH JOINTS – RH – RENEW	ALL DERIVATIVES	1.8	USED WITHINS	+

SPECIAL TOOL(S)



211-314 (LRT-57-036)

Ball joint separator



205-754 (LRT-54-027)

Ball joint separator



204-506/3 (LRT-60-030/3)

Halfshaft remover/replacer



204-506/1 (LRT-60-030/1)

Halfshaft remover/replacer



204-506/2 (LRT-60-030/2)

Halfshaft remover/replacer



204-506/5 (LRT-60-030/5)

Retainers - halfshaft remover/replacer



205-735 (LRT-54-026)

Remover halfshaft inboard joint



204-506/4

Installer, Halfshaft

REMOVAL

NOTE:

Some variation in the illustrations may occur, but the essential information is always correct.

1. Disconnect the battery ground cable.
   For additional information, refer to: Specifications (414-00 Battery and Charging System - General Information, Specifications).

2. **WARNING:**

   Do not work on or under a vehicle supported only by a jack. Always support the vehicle on safety stands.

   Raise the front of the vehicle.

3. Remove the front road wheels and tires.

4.

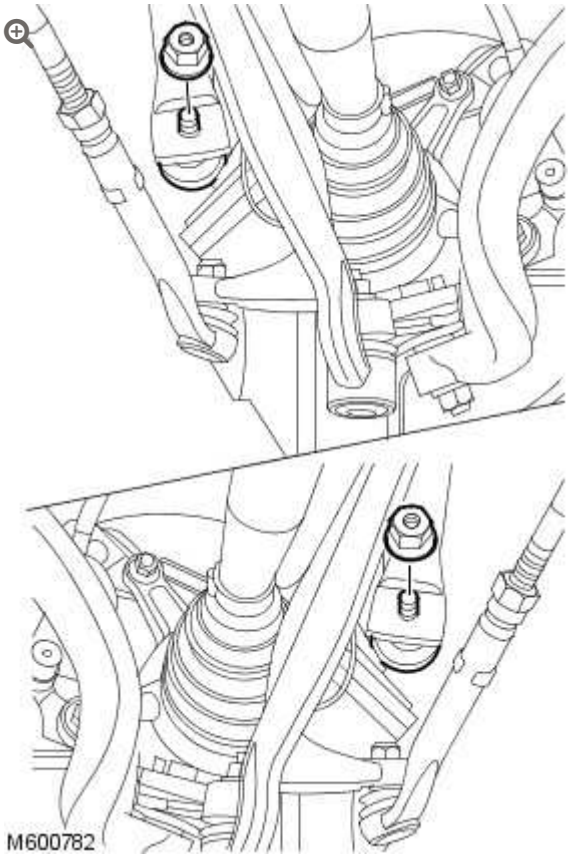

Release the stabilizer bar links from the stabilizer bar.

- Remove the 2 nuts.

5.

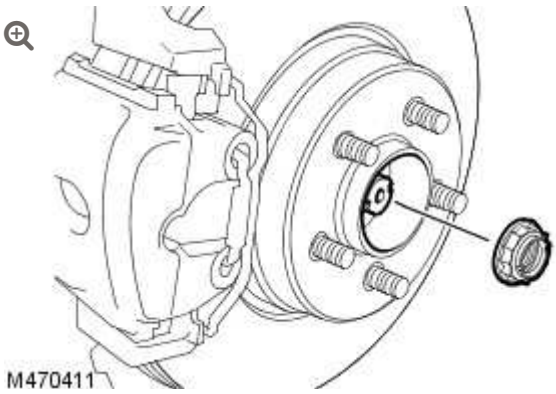

With assistance, remove and discard the halfshaft nut.

6. Remove the RH front brake disc.
   For additional information, refer to: Brake Disc - Vehicles With: Standard Brakes (206-03 Front Disc Brake, Removal and Installation).

7.

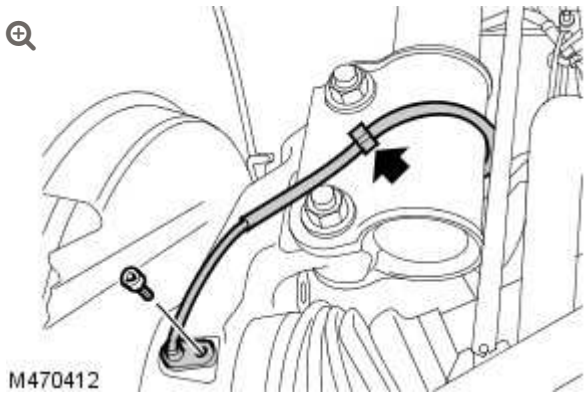

Release the RH front anti-lock brake system (ABS) sensor and wiring harness.

- Release the clip.
- Remove the bolt.

8.

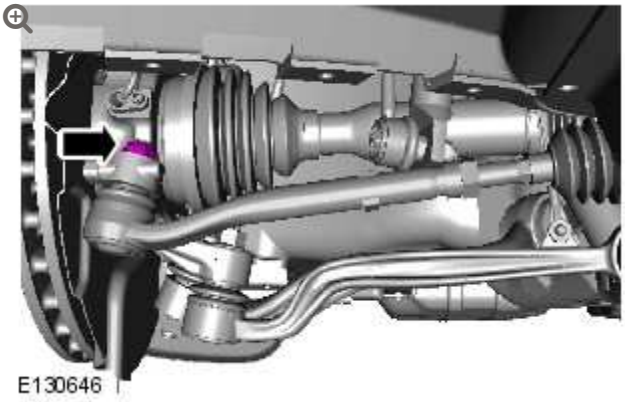

Loosen the RH tie rod end locking nut.

9.

CAUTION:

Make sure the ball joint seal is not damaged. A damaged seal will lead to the premature failure of the joint.

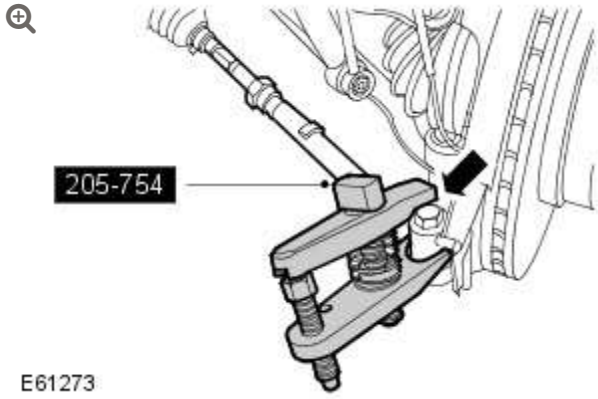

Using the special tool release the RH tie rod end.

- Remove and discard the nut.

10.

NOTE:

LH illustration shown, RH is similar.

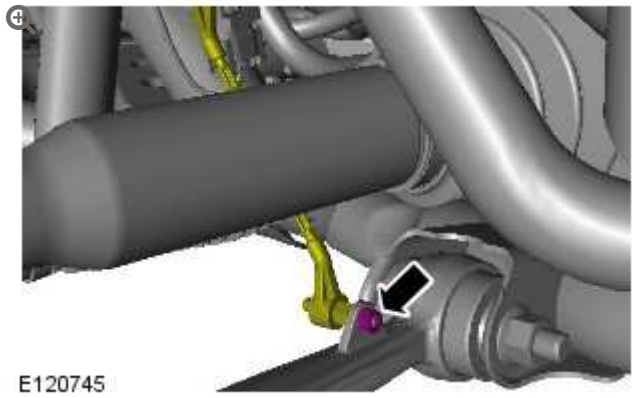

RH side front: Release the suspension height sensor.

11.

NOTE:

LH illustration shown, RH is similar.

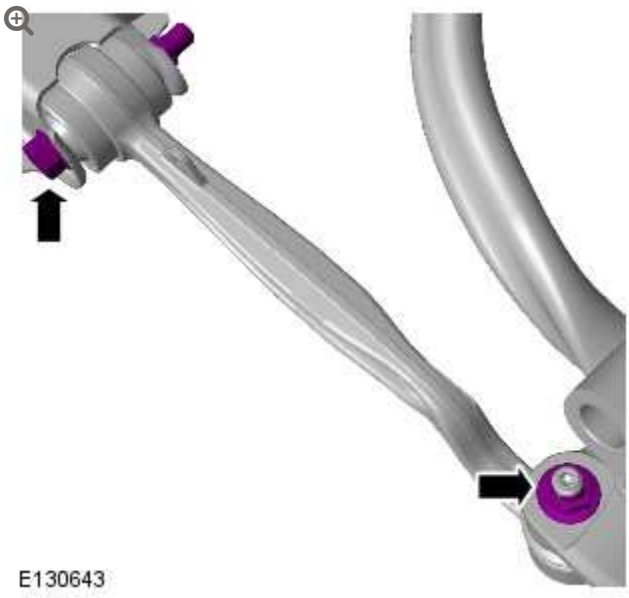

Loosen the front lower arm retaining nut and bolt.

- Loosen the lower arm ball joint retaining nut.

12.

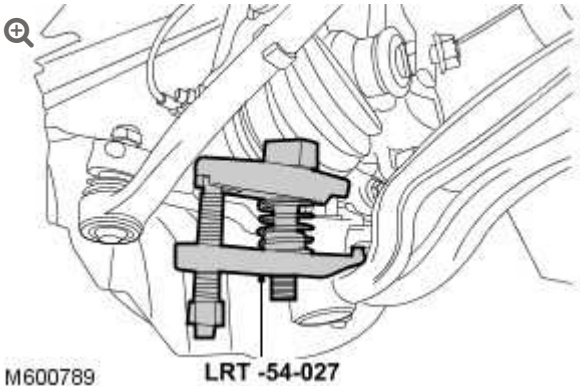

Using the special tool release the RH front lower arm.

- Remove the nut.

13.

NOTE:

LH illustration shown, RH is similar.

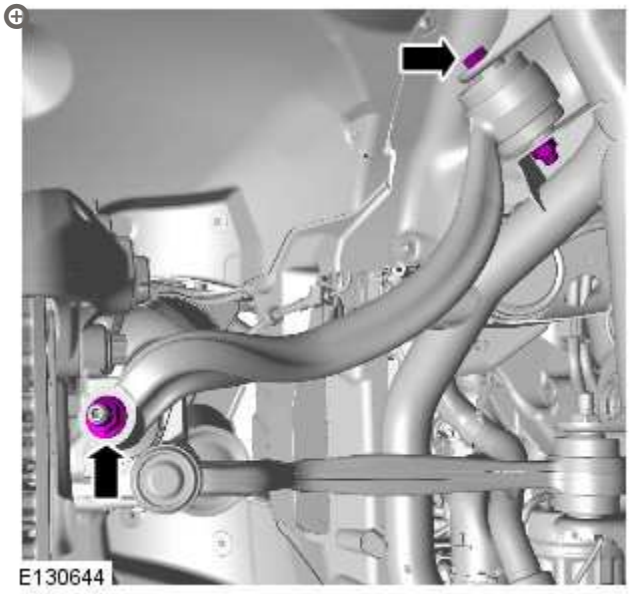

Loosen the rear lower arm retaining nut and bolt.

- Loosen the lower arm ball joint retaining nut.

14.

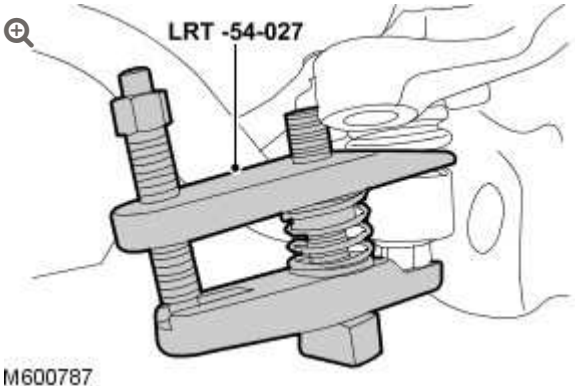

Using the special tool release the RH rear lower arm.

- Remove the nut.

15.

CAUTION:

Do not use a hammer to detach the halfshaft from the hub assembly, failure to follow this instruction may result in damage to the halfshaft.

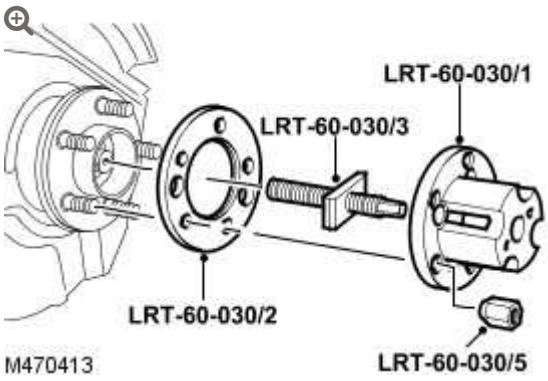

Using the special tools, release the halfshaft from the wheel hub.

16. Remove the special tools.

17. Position a container to collect the fluid spillage.

18. 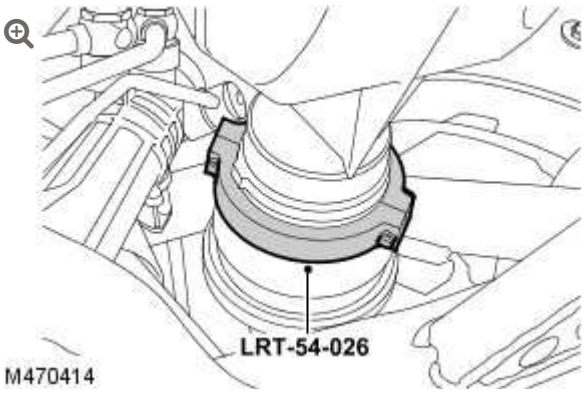

Install the special tool, to the inner halfshaft joint.

19. RH front: Release the halfshaft from the differential housing.

20. Release the halfshaft from the wheel hub.

21. Reposition the stabilizer bar.

22. With assistance, remove the halfshaft.

23.



Remove and discard the clip from the RH halfshaft.

24.

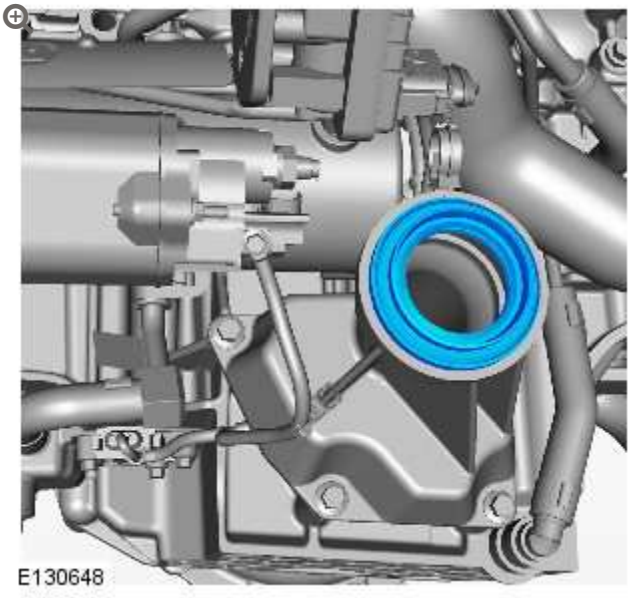

RH front: Remove and discard the halfshaft seal.

INSTALLATION

1. 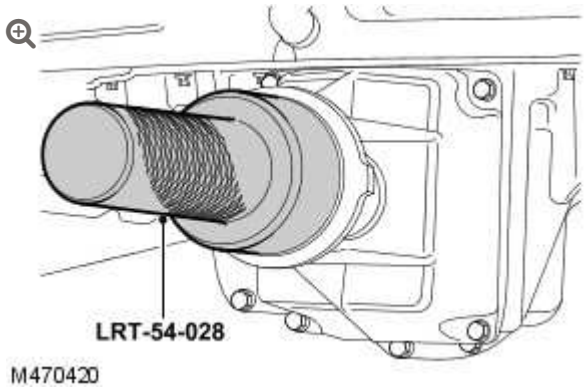

   Using the special tool, install a new halfshaft seal.

   - Lubricate the seal with clean differential fluid.

2. Install a new clip to the RH halfshaft.

3. Reposition the stabilizer bar.

4. **CAUTION:**

   Pull on the halfshaft inboard joint to make sure the clip has fully engaged and retains the halfshaft inboard joint within the differential case.

   With assistance, install the halfshaft.

   - Lubricate the oil seal.

5. Locate the halfshaft in the wheel hub.

   - Lightly lubricate the halfshaft splines.
   - Clean the halfshaft and wheel hub splines.

6.

CAUTION:

Install the halfshaft nut finger tight.

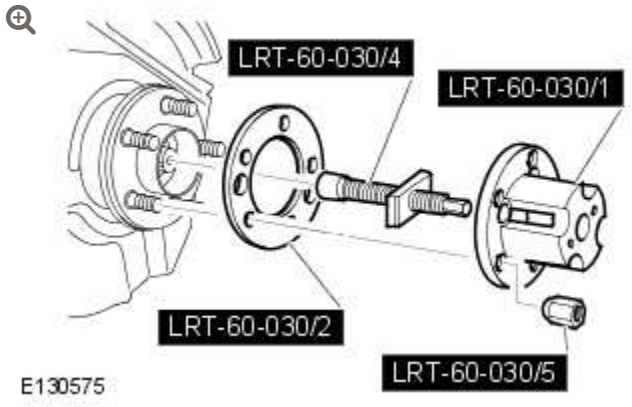

Using the special tools, pull the halfshaft in to the wheel hub.

7. Remove the special tools.

8. **CAUTION:**

Only tighten the nuts and bolts when the suspension is in the normal drive position.

Secure the RH rear lower arm.

- Tighten the nut to 80 Nm (59 lb.ft).
- Tighten the rear lower arm nut and bolt to 165 Nm (122 lb.ft) plus a further 90 degrees.

9. **CAUTION:**

Only tighten the nuts and bolts when the suspension is in the normal drive position.

Secure the RH front lower arm.

- Tighten the nut to 80 Nm (59 lb.ft).
- Tighten the lower arm bolt to 165 Nm (122 lb.ft) plus a further 90 degrees.

10. RH side front: Secure the suspension height sensor.

11. Secure the RH tie rod end.
    - Install a new nut and tighten to 80 Nm (59 lb.ft).

12. Secure the RH front ABS sensor and wiring harness.
    - Apply anti-seize compound to the ABS sensor.
    - Tighten the bolt to 8 Nm (6 lb.ft)
    - Secure in the clip.

13. Install the RH front brake disc.
    For additional information, refer to: Brake Disc - Vehicles With: Standard Brakes (206-03 Front Disc Brake, Removal and Installation).

14. **CAUTION:**

    Do not use air tools to install the nut. Failure to follow this instruction may result in damage to the component.

    With assistance tighten the wheel hub nut to 420Nm (311 lb.ft).
    - Use a new nut.
    - Stake the nut to the halfshaft.

15. Secure the stabilizer bar links.
    - Tighten the nuts to 100 Nm (74 lb.ft).

16. Install the front wheels and tires.
    - Tighten the wheel nuts to 140 Nm (103 lb.ft).

17. Check and top-up the differential case.

18. Check, and if necessary, adjust the wheel alignment.
    For additional information, refer to: Four-Wheel Alignment (204-00 Suspension System - General Information, General Procedures).

19. Connect the battery ground cable.
    For additional information, refer to: Specifications (414-00 Battery and Charging System - General Information, Specifications).

FRONT DRIVE HALFSHAFTS

HALFSHAFT BEARING (G1241415)

REMOVAL AND INSTALLATION

47.10.41	BEARING HALFSHAFT SUPPORT - RENEW	ALL DERIVATIVES	1.4	USED WITHINS	+

SPECIAL TOOL(S)



(LRT-54-031)

Halfshaft bearing installer 205-739

REMOVAL

1. Remove and discard the RH halfshaft seal.
   For additional information, refer to: Front Halfshaft RH - Vehicles Without: High Performance Brakes (205-04 Front Drive Halfshafts, Removal and Installation).

2. Remove and discard the RH halfshaft seal.
   For additional information, refer to: Front Halfshaft RH - Vehicles With: High Performance Brakes (205-04, Removal and Installation).

3. 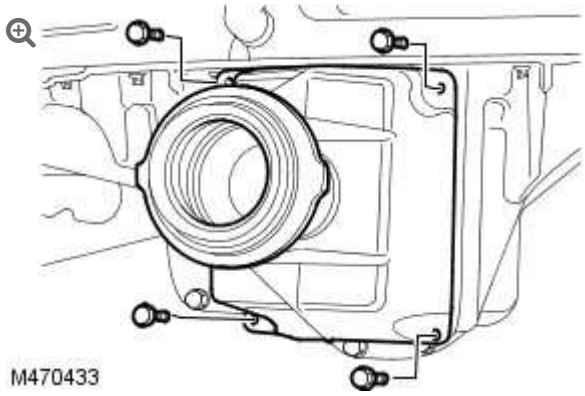

   Remove the halfshaft support bearing housing.

   - Remove the 4 bolts.
   - Remove and discard the O-ring seal.

4. **NOTE:**

   Do not disassemble further if the component is removed for access only.

   Remove the halfshaft bearing.

INSTALLATION

1.

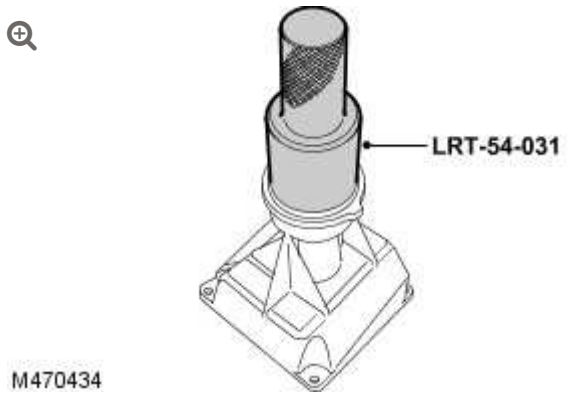

Using the special tool install the halfshaft bearing.

- Lubricate the halfshaft bearing with clean differential oil.

2. Install the halfshaft support bearing housing.
   - Install a new O-ring seal.
   - Tighten the 4 bolts to 22 Nm (16 lb.ft).

3. Install the RH halfshaft seal.
   For additional information, refer to: Front Halfshaft RH - Vehicles Without: High Performance Brakes (205-04 Front Drive Halfshafts, Removal and Installation).

2012.0 RANGE ROVER (LM), 205-04

FRONT DRIVE HALFSHAFTS

DESCRIPTION AND OPERATION

Front Drive Halfshaft - Sectional View

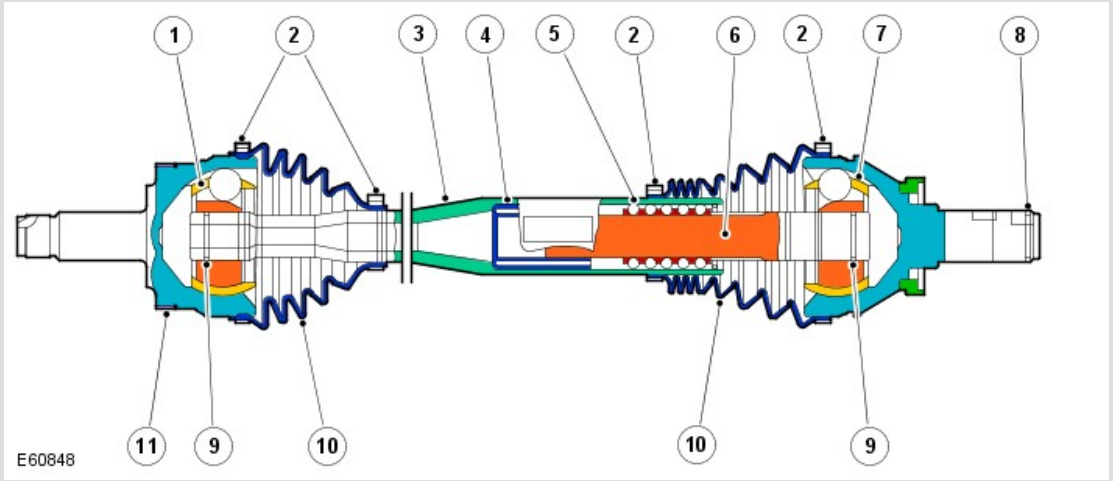

ITEM	DESCRIPTION
1	Outer CV joint

2	Clamp
3	Outer tube
4	Sealing plug
5	Ball cage
6	Shaft
7	Inner CV joint
8	Snap ring - differential
9	Snap ring
10	Gaiter
11	ABS sensor target ring.

GENERAL

The CV joints are of the Birfield design. This design uses longitudinal, elliptical grooves, which retain 6 steel balls. The balls are further retained by a cage. The constant velocity is achieved by the position of the steel balls. If a centre line is drawn through the balls and the driven hub or differential shaft, the 2 centre lines always bisect each other at the angle of drive. This condition allows the rotational speed of the driven shaft to be passed to the driven hub or differential shaft with no loss of rotational speed regardless of the shaft angle. The CV joints are packed with grease, which is retained in the joint by a synthetic rubber gaiter. The gaiter is retained at each end by a metal clamp, which provides a water tight seal to prevent the ingress of dirt and moisture. The CV joints are retained on their respective shaft or tube by an internal snap ring. The snap rings

are located in a groove on each shaft or tube end and locate in a mating groove in the CV joint. The CV joints can be removed by a sharp tap with a soft mallet on the CV joint housing, which releases the snap ring from the groove.

The shaft is a sliding fit inside the outer tube, which allows for the small length changes which occur with articulation of the suspension. The shaft is located in a ball cage, which is retained inside the outer tube. The ball cage ensures that the shaft is held rigidly in the outer tube whilst allowing it to freely move in and out of the tube as necessary. A sealing plug is pressed into the outer tube and retains grease around the balls in the cage.

The inner CV joint shaft is splined and mates with splines in the front differential. A snap ring is located around the inner shaft and, when fitted in the differential, locates in a mating groove in the differential splined bore. The CV joint shaft is removed from the differential in a similar manner as removing a CV joint.

FRONT DRIVE HALFSHAFTS

HALFSHAFT SEAL LH – VEHICLES WITH: HIGH PERFORMANCE BRAKES

(G1225867)

REMOVAL AND INSTALLATION

54.10.18	OIL SEAL – DIFFERENTIAL HOUSING – ONE SIDE – RENEW	ALL DERIVATIVES	1.3	USED WITHINS	+

SPECIAL TOOL(S)



211–314 (LRT–57–036)

Ball joint separator



205-754 (LRT-54-027)

Ball joint separator



204-506/3 (LRT-60-030/3)

Halfshaft remover/replacer



204-506/1 (LRT-60-030/1)

Halfshaft remover/replacer



204-506/2 (LRT-60-030/2)

Halfshaft remover/replacer



204-506/5 (LRT-60-030/5)

Retainers - halfshaft remover/replacer



205-735 (LRT-54-026)

Remover halfshaft inboard joint



308-005 (LRT-37-004/2)

Axle oil seal remover



308-626/1

Installer halfshaft oil seal



308-626/2

Installer/Guide halfshaft oil seal

REMOVAL

1. **WARNING:**

   Do not work on or under a vehicle supported only by a jack. Always support the vehicle on safety stands.

   Raise the front of the vehicle.

2. Remove the LH front wheel and tire.

3. 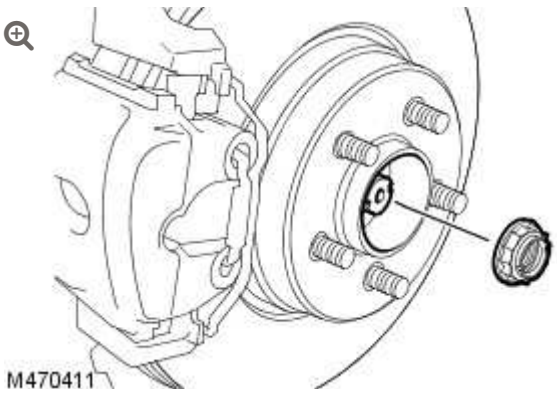

   With assistance, remove and discard the halfshaft nut.

4. Remove the LH front brake disc.
   For additional information, refer to: Brake Disc - Vehicles With: High Performance Brakes (206-03 Front Disc Brake, Removal and Installation).

5. 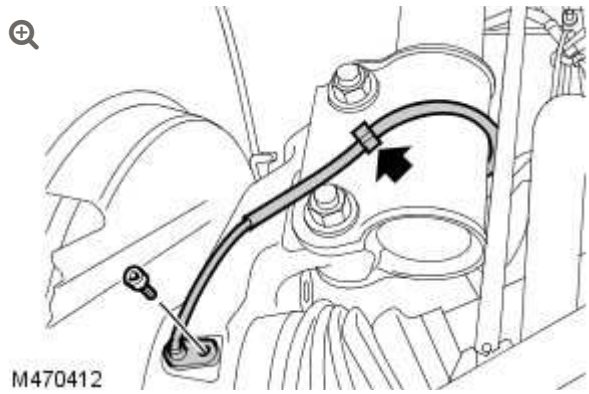

   Release the LH front anti-lock brake system (ABS) sensor and wiring harness.

   - Release the clip.
   - Remove the bolt.

6. Loosen the LH tie rod end locking nut.

7. **CAUTION:**

   Make sure the ball joint seal is not damaged. A damaged seal will lead to the premature failure of the joint.

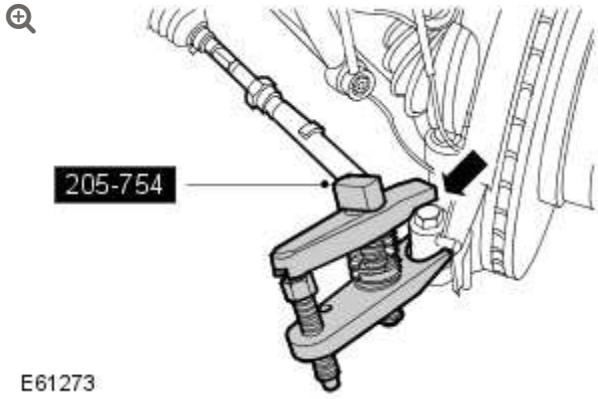

Using the special tool release the LH tie rod end.

- Remove and discard the nut.

8.

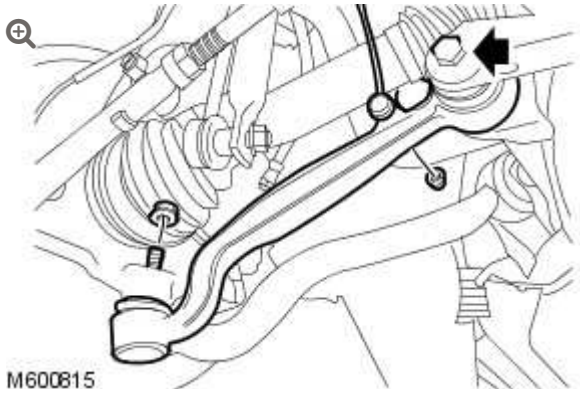

LH side front: Release the suspension height sensor.

9.

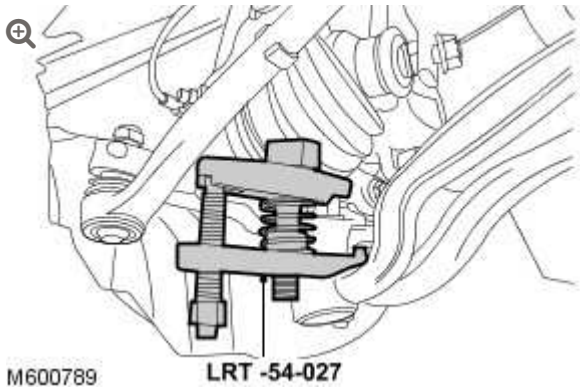

Using the special tool release the LH front lower arm.

- Remove the nut.
- Loosen the nut and bolt.

10.

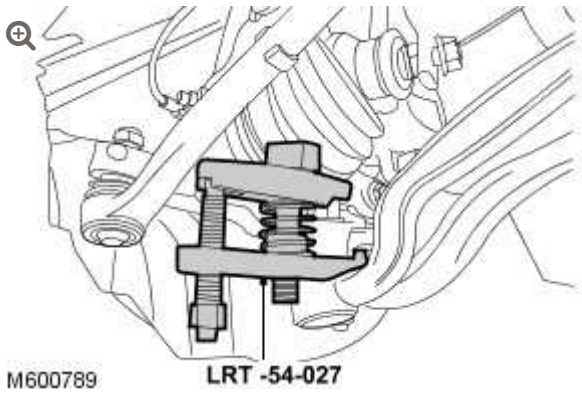

Using the special tool release the LH rear lower arm.

- Loosen the nut and bolt.
- Remove the nut.

11. Position a container to collect the fluid spillage.

12.

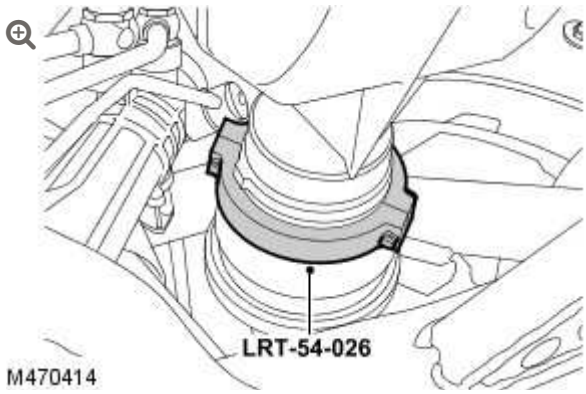

Install the special tool, to the inner halfshaft joint.

13. **CAUTION:**

> Keep the halfshaft horizontal to avoid damaging the seal.

LH front: Release the halfshaft from the differential housing.

- Reposition the halfshaft.

14. Remove and discard the clip from the LH halfshaft.

15.

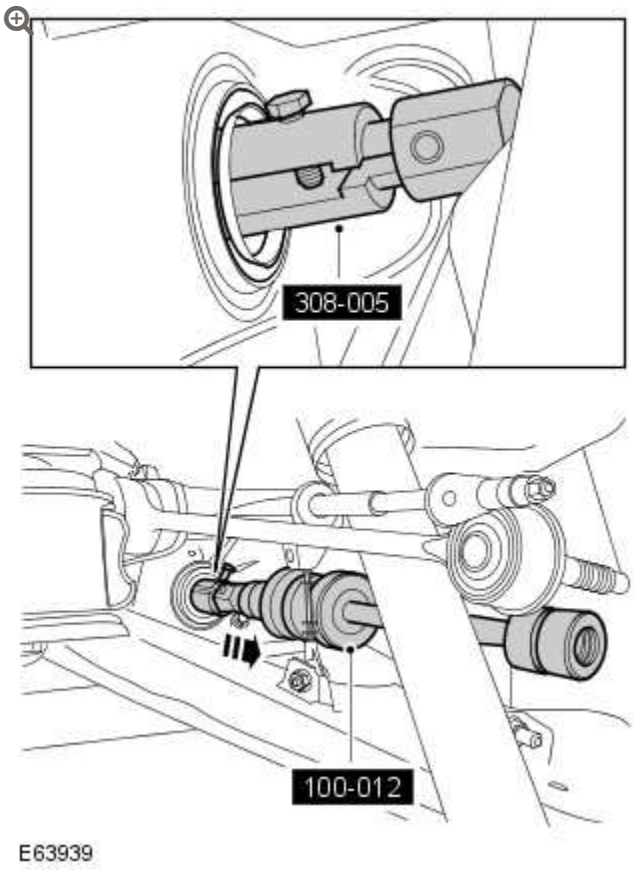

Using the special tools, remove and discard the halfshaft seal.

INSTALLATION

1. **CAUTION:**

> The halfshaft seal protector must be left in place until the halfshaft has been installed.

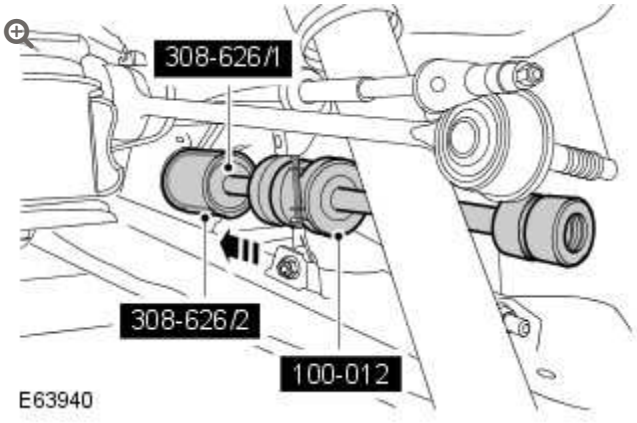

Using the special tools, install a new halfshaft seal.

- Clean the component mating faces.

2.

CAUTION:

Pull on the halfshaft inboard joint to make sure the clip has fully engaged and retains the halfshaft inboard joint within the differential case.

Secure the halfshaft.

- Install a new circlip.
- Lubricate the seal.
- Remove the halfshaft seal protector.

3. Remove the special tool.

4.

CAUTION:

Only tighten the nuts and bolts when the suspension is in the normal drive position.

Secure the LH rear lower arm.

- Tighten the nut to 80 Nm (59 lb.ft).
- Tighten the rear lower arm nut and bolt to 165 Nm (122 lb.ft) plus a further 90 degrees.

5. **CAUTION:**

   Only tighten the nuts and bolts when the suspension is in the normal drive position.

   Secure the LH front lower arm.
   - Tighten the nut to 80 Nm (59 lb.ft).
   - Tighten the lower arm nut and bolt to 165 Nm (122 lb.ft) plus a further 90 degrees.

6. LH side front: Secure the suspension height sensor.

7. Secure the LH tie rod end.
   - Install new nut and tighten to 80 Nm (59 lb.ft).

8. Secure the LH front ABS sensor and wiring harness.
   - Apply anti-seize compound to the ABS sensor.
   - Tighten the bolt to 8 Nm (6 lb.ft)
   - Secure in the clip.

9. Install the LH front brake disc.
   For additional information, refer to: Brake Disc - Vehicles With: High Performance Brakes (206-03 Front Disc Brake, Removal and Installation).

10. With assistance tighten the wheel hub nut to 420 Nm (311 lb.ft).

- Use a new nut.
- Stake the nut to the halfshaft.

11. Install the LH front wheel and tire.
    - Tighten the wheel nuts to 140 Nm (103 lb.ft).

12. Check and top-up the differential case.

13. Check, and if necessary, adjust the wheel alignment.

FRONT DRIVE HALFSHAFTS

HALFSHAFT SEAL LH – VEHICLES WITHOUT: HIGH PERFORMANCE BRAKES

(G1250055)

REMOVAL AND INSTALLATION

54.10.18	OIL SEAL – DIFFERENTIAL HOUSING – ONE SIDE – RENEW	ALL DERIVATIVES	1.3	USED WITHINS	+

SPECIAL TOOL(S)



211-314 (LRT-57-036)

Ball joint separator



205-754 (LRT-54-027)

Ball joint separator



204-506/3 (LRT-60-030/3)

Halfshaft remover/replacer



204-506/1 (LRT-60-030/1)

Halfshaft remover/replacer



204-506/2 (LRT-60-030/2)

Halfshaft remover/replacer



204-506/5 (LRT-60-030/5)

Retainers - halfshaft remover/replacer



205-735 (LRT-54-026)

Remover halfshaft inboard joint



308-005 (LRT-37-004/2)

Axle oil seal remover



308-626/1

Installer halfshaft oil seal



308-626/2

Installer/Guide halfshaft oil seal

REMOVAL

NOTE:

Some variation in the illustrations may occur, but the essential information is always correct.

1. **WARNING:**

   Do not work on or under a vehicle supported only by a jack. Always support the vehicle on safety stands.

   Raise the front of the vehicle.

2. Remove the LH front wheel and tire.

3.

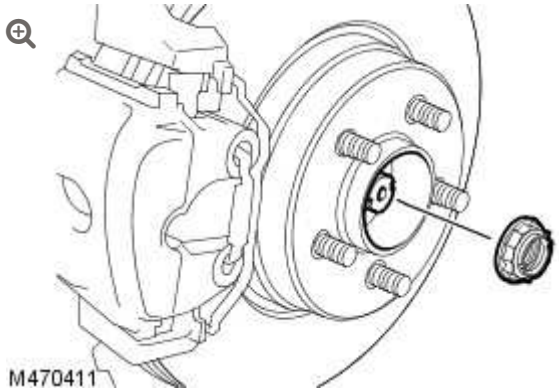

With assistance, remove and discard the halfshaft nut.

4. Remove the LH front brake disc.
   For additional information, refer to: Brake Disc - Vehicles With: Standard Brakes (206-03 Front Disc Brake, Removal and Installation).

5. 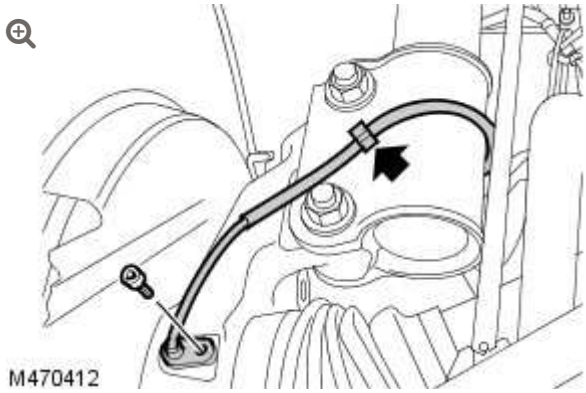

   Release the LH front anti-lock brake system (ABS) sensor and wiring harness.

   - Release the clip.
   - Remove the bolt.

6. Loosen the LH tie rod end locking nut.

7.

CAUTION:

Make sure the ball joint seal is not damaged. A damaged seal will lead to the premature failure of the joint.

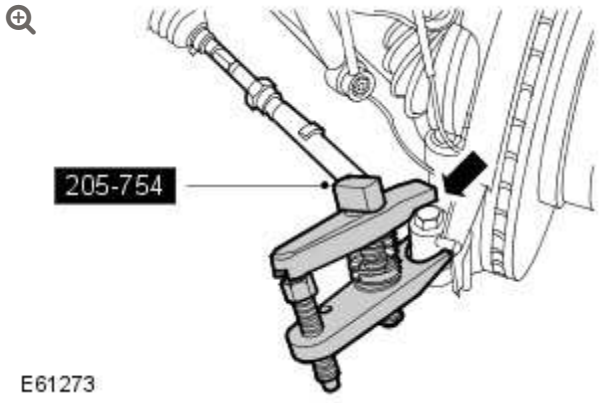

Using the special tool release the LH tie rod end.

- Remove and discard the nut.

8.

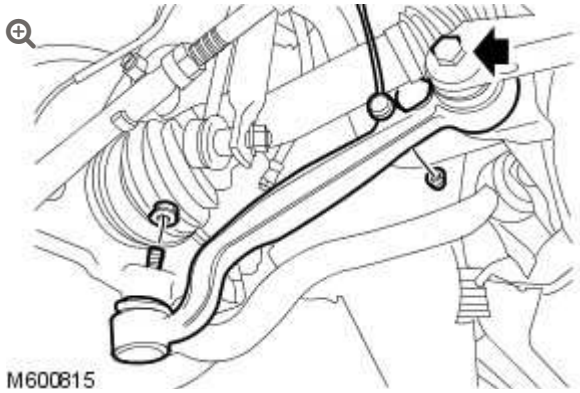

LH side front: Release the suspension height sensor.

9.

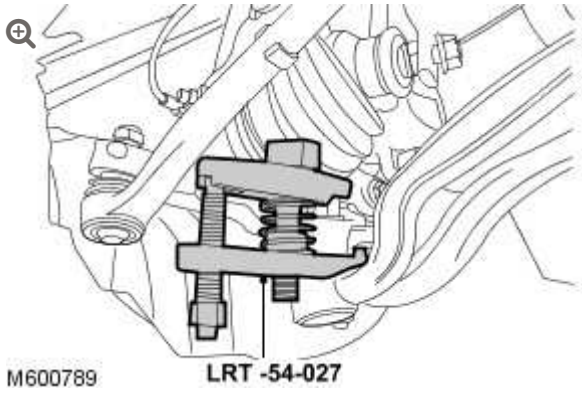

Using the special tool release the LH front lower arm.

- Remove the nut.
- Loosen the nut and bolt.

10.

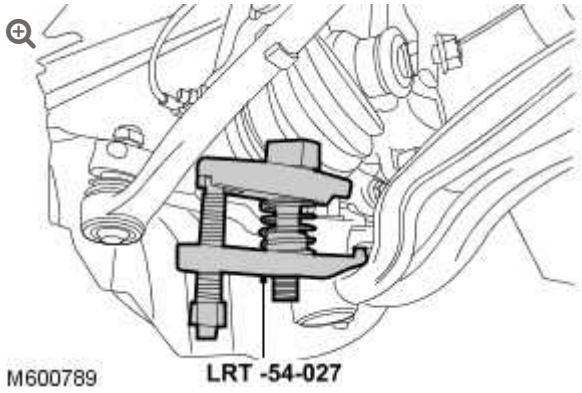

Using the special tool release the LH rear lower arm.

- Loosen the nut and bolt.
- Remove the nut.

11. Remove the special tools.

12. Position a container to collect the fluid spillage.

13.

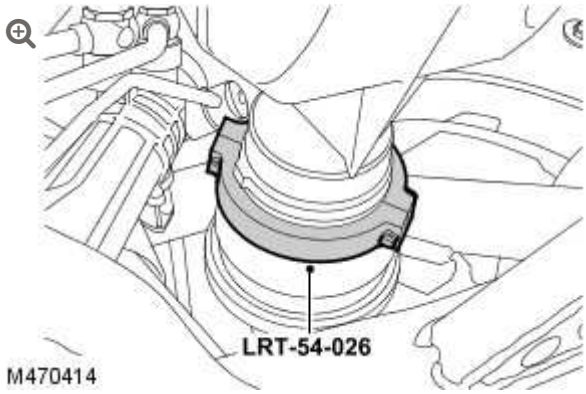

Install the special tool, to the inner halfshaft joint.

14.

CAUTION:

Keep the halfshaft horizontal to avoid damaging the oil seal.

LH front: Release the halfshaft from the differential housing.

- Reposition the halfshaft.
- Remove the special tool.

15. Remove and discard the clip from the LH halfshaft.

16.

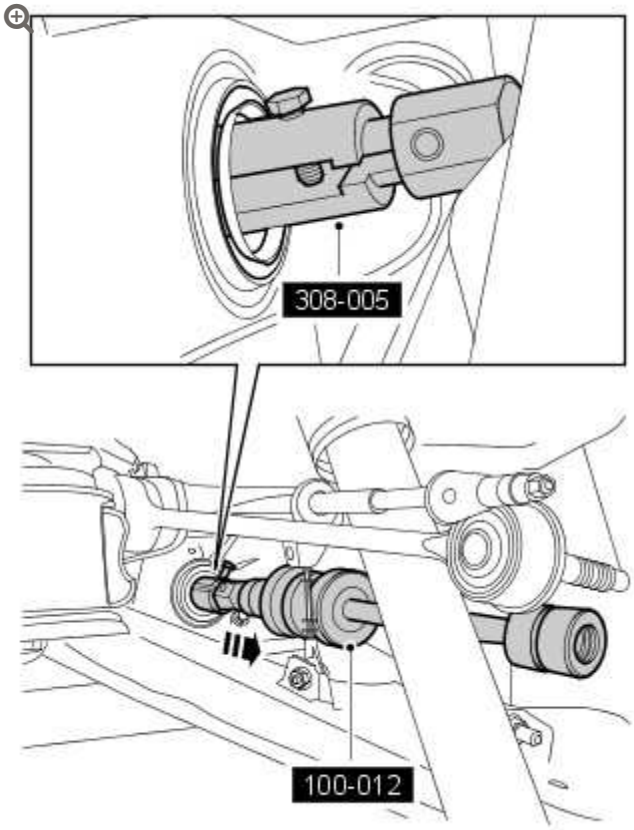

Using the special tools, remove and discard the halfshaft oil seal.

INSTALLATION

1. **CAUTION:**

   The seal protector must be left in place until the halfshaft has been installed.

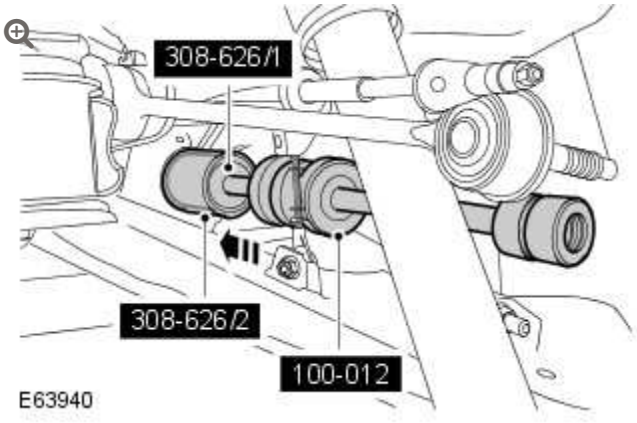

Using the special tools, install a new halfshaft oil seal.

- Clean the component mating faces.

2.

CAUTION:

Pull on the halfshaft inboard joint to make sure the clip has fully engaged and retains the halfshaft inboard joint within the differential case.

Secure the halfshaft.

- Install a new circlip.
- Lubricate the oil seal.

3.

NOTES:

- LH illustration shown, RH is similar.
- The halfshaft seal protector is designed to break into two pieces.

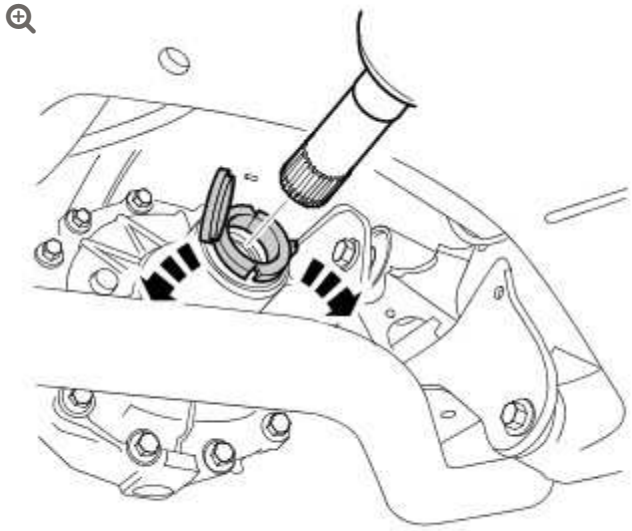

E63941

Remove and discard the halfshaft seal protector.

4. Remove the special tool.

5. **CAUTION:**

Only tighten the nuts and bolts when the suspension is in the normal drive position.

Secure the LH rear lower arm.

- Tighten the nut to 80 Nm (59 lb.ft).
- Tighten the rear lower arm nut and bolt to 165 Nm (122 lb.ft) plus a further 90 degrees.

6. **CAUTION:**

Only tighten the nuts and bolts when the suspension is in the normal drive position.

Secure the LH front lower arm.

- Tighten the nut to 80 Nm (59 lb.ft).
- Tighten the lower arm nut and bolt to 165 Nm (122 lb.ft) plus a further 90 degrees.

7. LH side front: Secure the suspension height sensor.

8. Secure the LH tie rod end.
   - Install new nut and and tighten to 80 Nm (59 lb.ft).

9. Secure the LH front ABS sensor and wiring harness.
   - Apply anti-seize compound to the ABS sensor.
   - Tighten the bolt to 8 Nm (6 lb.ft)
   - Secure in the clip.

10. Install the LH front brake disc.
    For additional information, refer to: Brake Disc - Vehicles With: Standard Brakes (206-03 Front Disc Brake, Removal and Installation).

11. **CAUTION:**

    Do not use air tools to install the nut. Failure to follow this instruction may result in damage to the component.

    With assistance tighten the wheel hub nut to 420Nm (311 lb.ft).
    - Use a new nut.
    - Stake the nut to the halfshaft.

12. Install the LH front wheel and tire.
    - Tighten the wheel nuts to 140 Nm (103 lb.ft).

13. Check and top-up the differential case.

14. Check, and if necessary, adjust the wheel alignment.
    For additional information, refer to: Four-Wheel Alignment (204-00 Suspension System - General Information, General Procedures).

FRONT DRIVE HALFSHAFTS

HALFSHAFT SEAL RH - VEHICLES WITH: HIGH PERFORMANCE BRAKES

(G1225868)

REMOVAL AND INSTALLATION

SPECIAL TOOL(S)



205-754 (LRT-54-027)

Ball joint separator



211-314 (LRT-57-036)

Ball joint separator



205-735 (LRT-54-026)

Remover halfshaft inboard joint



205-736 (LRT-54-028)

Oil seal installer

REMOVAL

1.

WARNING:

Do not work on or under a vehicle supported only by a jack. Always support the vehicle on safety stands.

Raise the front of the vehicle.

2. Remove the front road wheels and tires.

3. Remove the RH front brake disc.
   For additional information, refer to: Brake Disc - Vehicles With: High Performance Brakes (206-03 Front Disc Brake, Removal and Installation).

4. 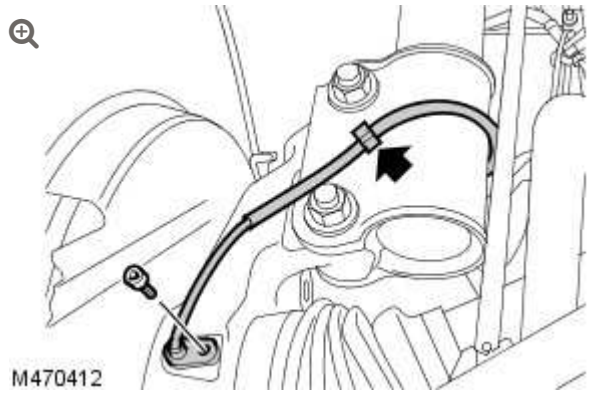

   Release the RH front anti-lock brake system (ABS) sensor and wiring harness.

   - Release from the clip.
   - Remove the bolt.

5.

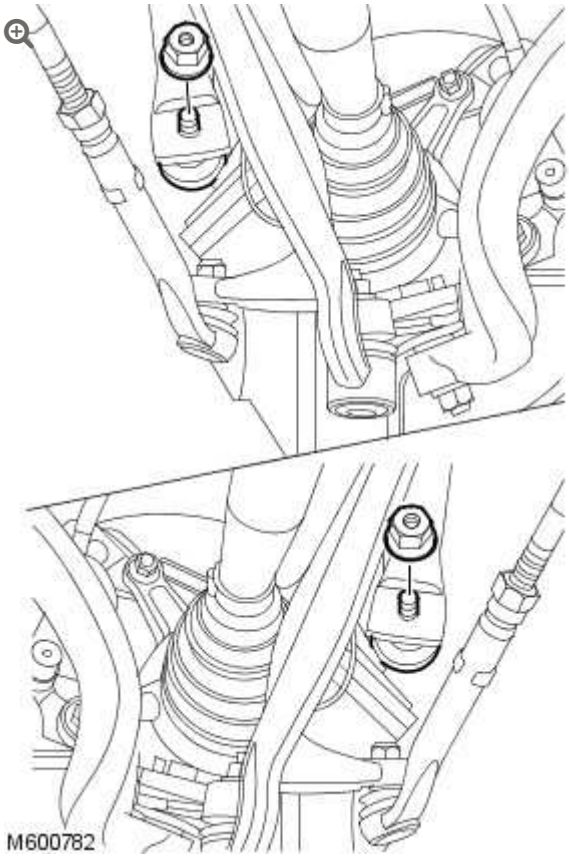

Release the stabilizer bar links from the stabilizer bar.

- Remove the 2 nuts.

6.

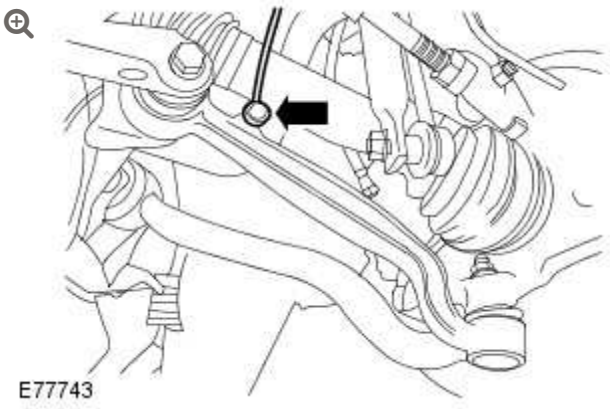

RH side front: Release the suspension height sensor.

7.

CAUTION:

Make sure the ball joint seal is not damaged. A damaged seal will lead to the premature failure of the joint.

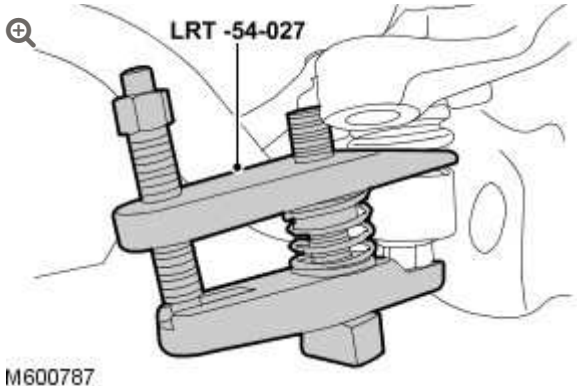

Using the special tool release the RH front lower arm.

- Remove the nut.
- Loosen the nut and bolt.

8.

CAUTION:

Make sure the ball joint seal is not damaged. A damaged seal will lead to the premature failure of the joint.

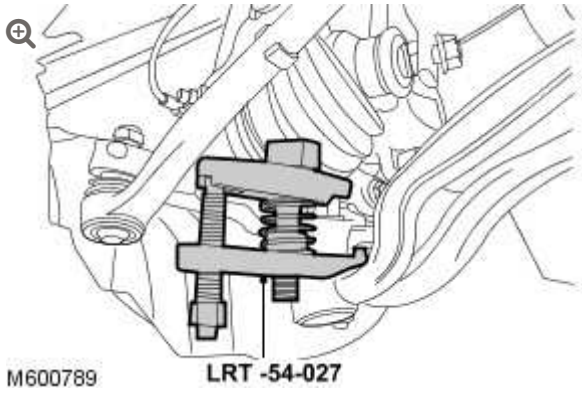

Using the special tool release the RH rear lower arm.

- Loosen the nut.
- Remove the nut.

9. Loosen the RH tie rod end locking nut.

10. **CAUTION:**

Make sure the ball joint seal is not damaged. A damaged seal will lead to the premature failure of the joint.

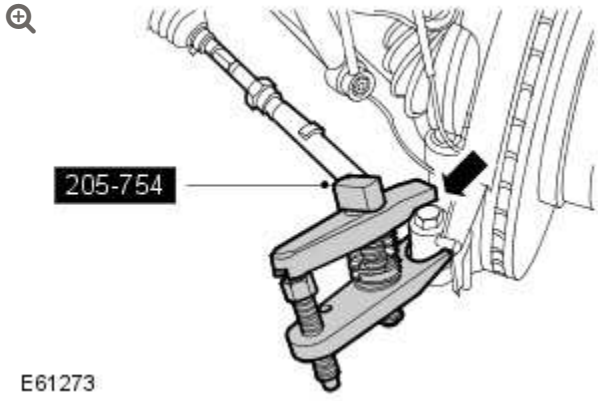

Using the special tool release the RH tie rod end.

- Remove and discard the nut.

11. Position a container to collect the fluid spillage.

12. 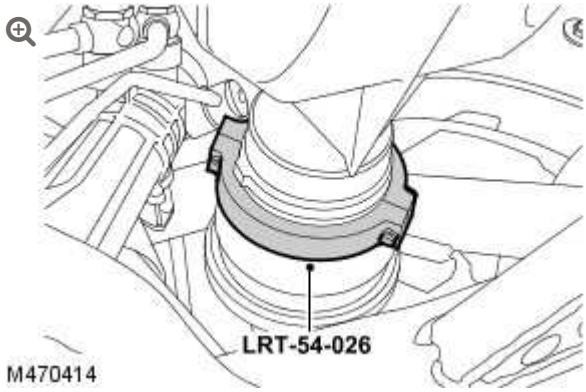

Install the special tool, to the inner halfshaft joint.

13. Release the clip.

14. 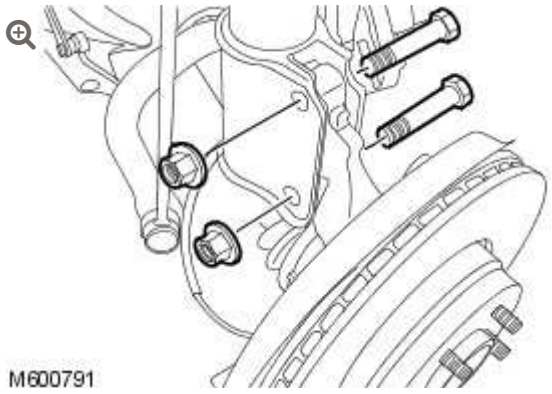

RH front: With assistance, remove the halfshaft and wheel knuckle assembly.

- Remove the 2 nuts and 2 bolts.

15.

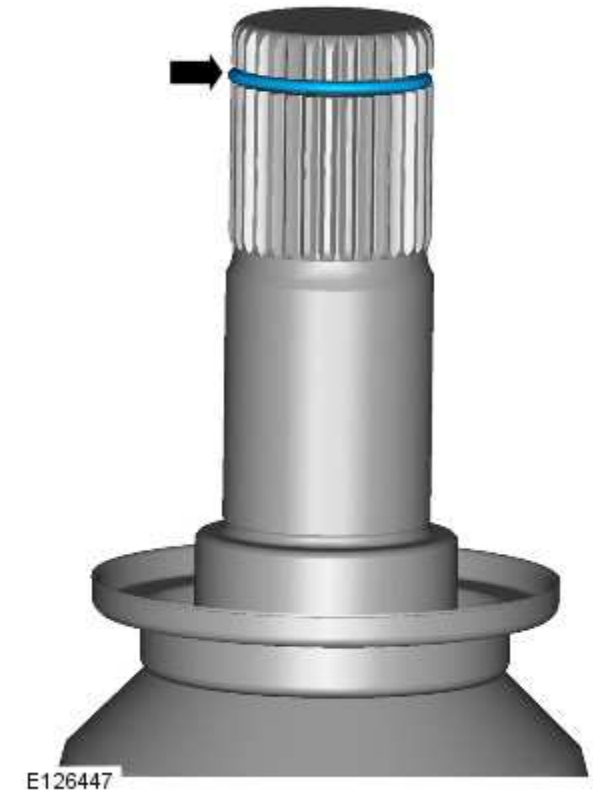

Remove and discard the clip from the RH halfshaft.

16.

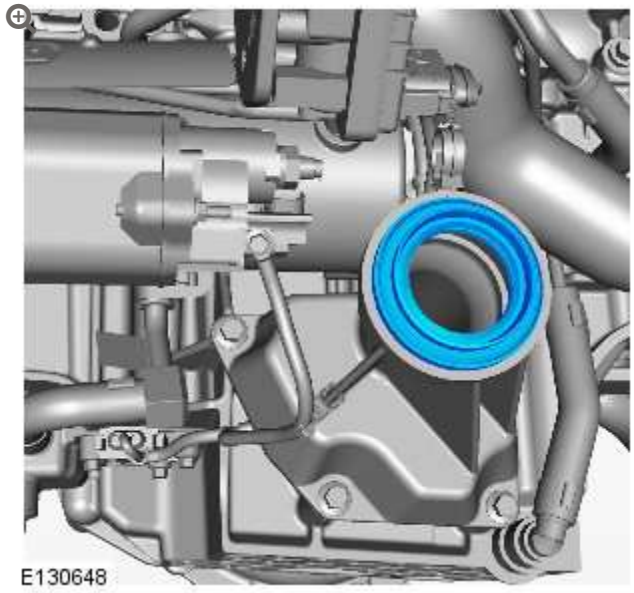

RH front: Remove and discard the halfshaft seal.

INSTALLATION

1. 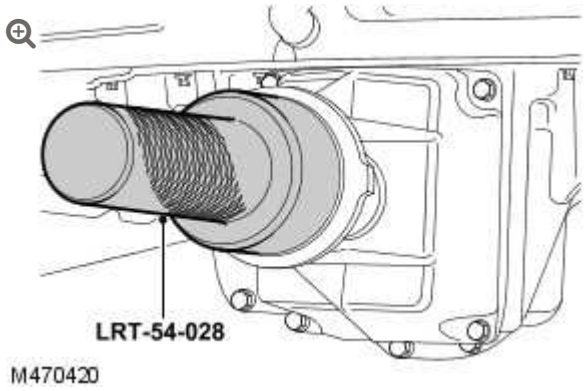

   Using the special tool, install a new halfshaft seal.

   - Lubricate the seal with clean differential fluid.

2. RH front: With assistance, install the wheel knuckle.

   - Install a new circlip.

3. Secure the wheel knuckle assembly to the shock absorber and spring assembly.

   - Tighten the nuts and bolts to 250 Nm (184 lb.ft).

4. Secure the RH tie rod end.

   - Install a new nut and tighten to 80 Nm (59 lb.ft).

5. **CAUTION:**

   Only tighten the nuts and bolts when the suspension is in the normal drive position.

   Secure the RH rear lower arm.

   - Tighten the nut to 80 Nm (59 lb.ft).
   -

Tighten the tie rod bolt to 165 Nm (122 lb.ft) plus a further 90 degrees.

6. **CAUTION:**

> Only tighten the nuts and bolts when the suspension is in the normal drive position.

Secure the RH front lower arm.

- Tighten the nut to 80 Nm (59 lb.ft).
- Tighten the lower arm bolt to 165 Nm (122 lb.ft) plus a further 90 degrees.

7. RH side front: Secure the suspension height sensor.

8. Secure the stabilizer bar links.
   - Tighten the nuts to 100 Nm (74 lb.ft).

9. Secure the RH front ABS sensor and wiring harness.
   - Apply anti-seize compound to the ABS sensor.
   - Tighten the bolt to 8 Nm (6 lb.ft)
   - Secure the clip.

10. Install the RH front brake disc.
    For additional information, refer to: Brake Disc - Vehicles With: High Performance Brakes (206-03 Front Disc Brake, Removal and Installation).

11. Install the front wheels and tires.
    - Tighten the wheel nuts to 140 Nm (103 lb.ft).

12. Check and top-up the differential case.

- Remove the container.

13. Check, and if necessary, adjust the wheel alignment.

FRONT DRIVE HALFSHAFTS

HALFSHAFT SEAL RH – VEHICLES WITHOUT: HIGH PERFORMANCE BRAKES

(G1250056)

REMOVAL AND INSTALLATION

SPECIAL TOOL(S)



205-754 (LRT-54-027)

Ball joint separator



211-314 (LRT-57-036)

Ball joint separator



205-735 (LRT-54-026)

Remover halfshaft inboard joint



205-736 (LRT-54-028)

Oil seal installer

REMOVAL

1.

WARNING:

Do not work on or under a vehicle supported only by a jack. Always support the vehicle on safety stands.

Raise the front of the vehicle.

2. Remove the front road wheels and tires.

3. Remove the RH front brake disc.
For additional information, refer to: Brake Disc - Vehicles With: Standard Brakes (206-03 Front Disc Brake, Removal and Installation).

4. 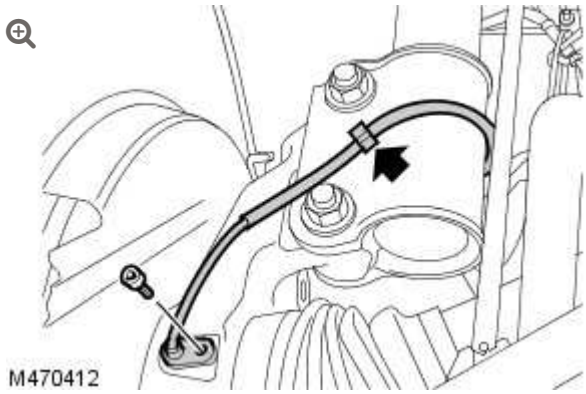

Release the RH front anti-lock brake system (ABS) sensor and wiring harness.

- Release from the clip.
- Remove the bolt.

5. **NOTE:**

RH side only.

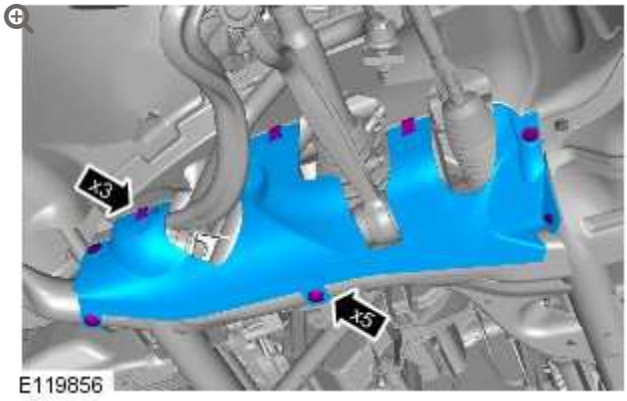

Remove the fender splash shield.

6.

NOTE:

RH side only.

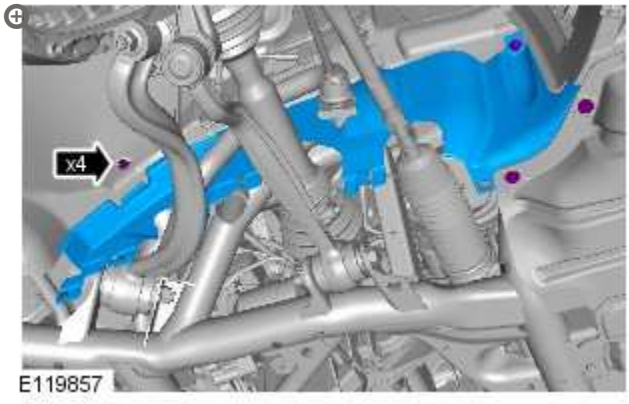

Remove the fender splash shield upper extension panel.

7.

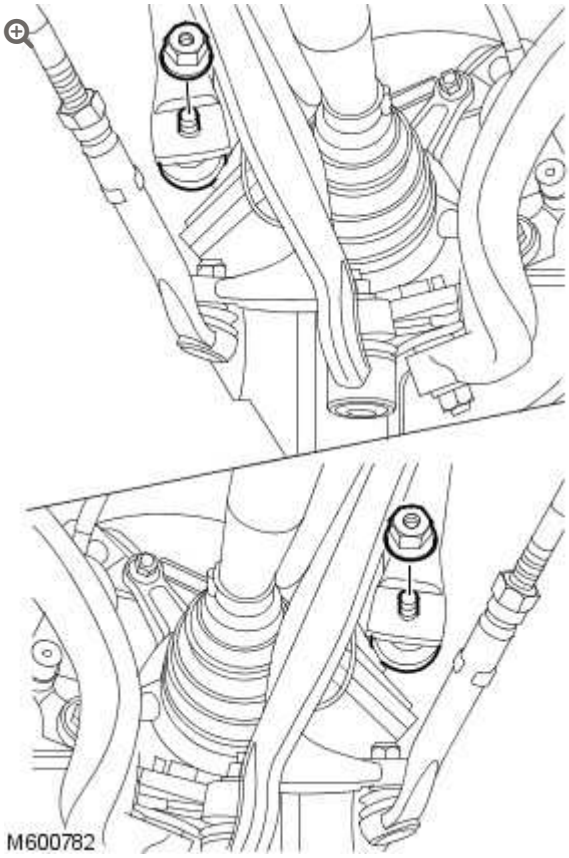

Release the stabilizer bar links from the stabilizer bar.

- Remove the 2 nuts.

8.

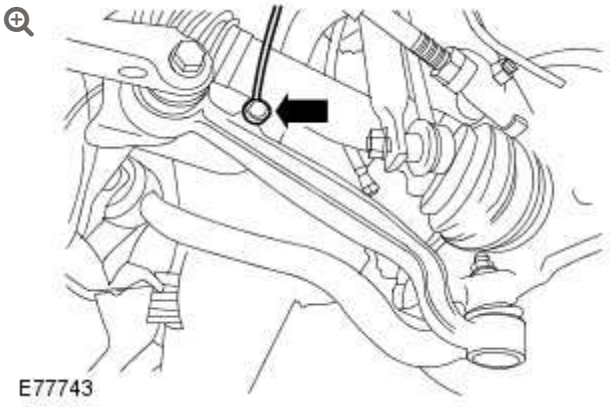

RH side front: Release the suspension height sensor.

9.

CAUTION:

Make sure the ball joint seal is not damaged. A damaged seal will lead to the premature failure of the joint.

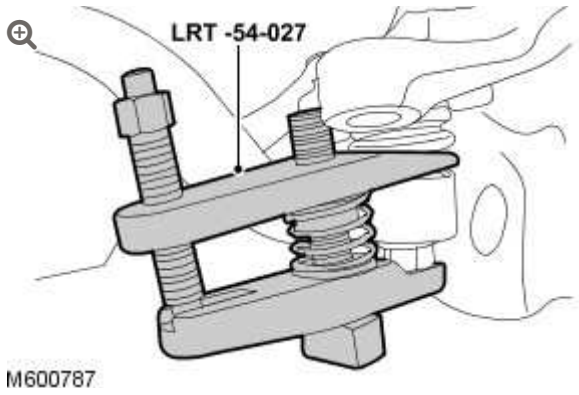

Using the special tool release the RH front lower arm.

- Remove the nut.
- Loosen the nut and bolt.

10.

CAUTION:

Make sure the ball joint seal is not damaged. A damaged seal will lead to the premature failure of the joint.

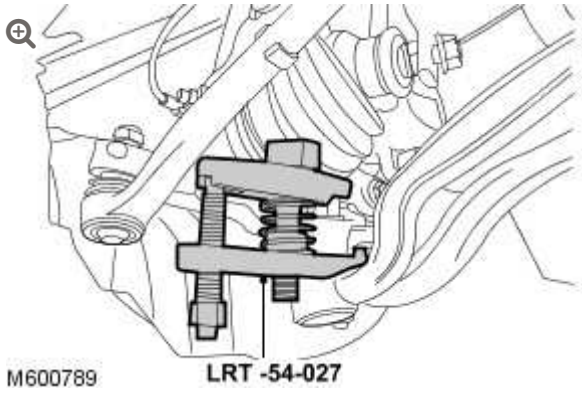

Using the special tool release the RH rear lower arm.

- Loosen the nut.
- Remove the nut.

11. Loosen the RH tie rod end locking nut.

12. **CAUTION:**

Make sure the ball joint seal is not damaged. A damaged seal will lead to the premature failure of the joint.

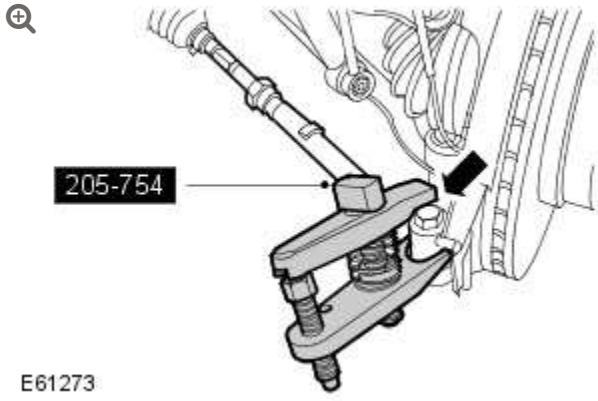

Using the special tool release the RH tie rod end.

- Remove and discard the nut.

13. Position a container to collect the fluid spillage.

14. 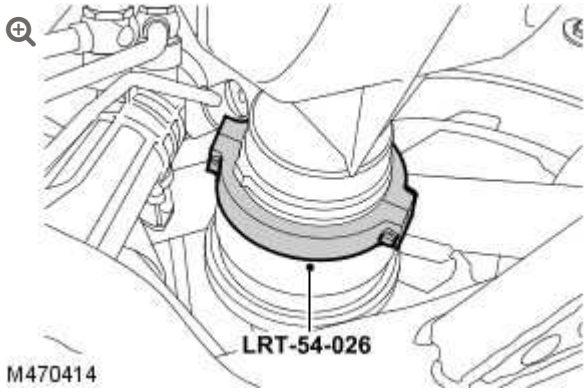

Install the special tool, to the inner halfshaft joint.

15. Release the clip.

16. 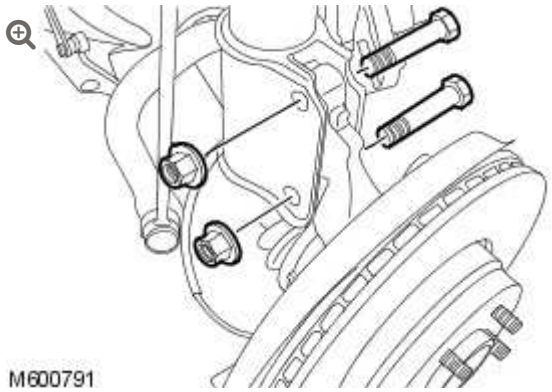

RH front: With assistance, remove the halfshaft and wheel knuckle assembly.

- Remove the 2 nuts and 2 bolts.

17.

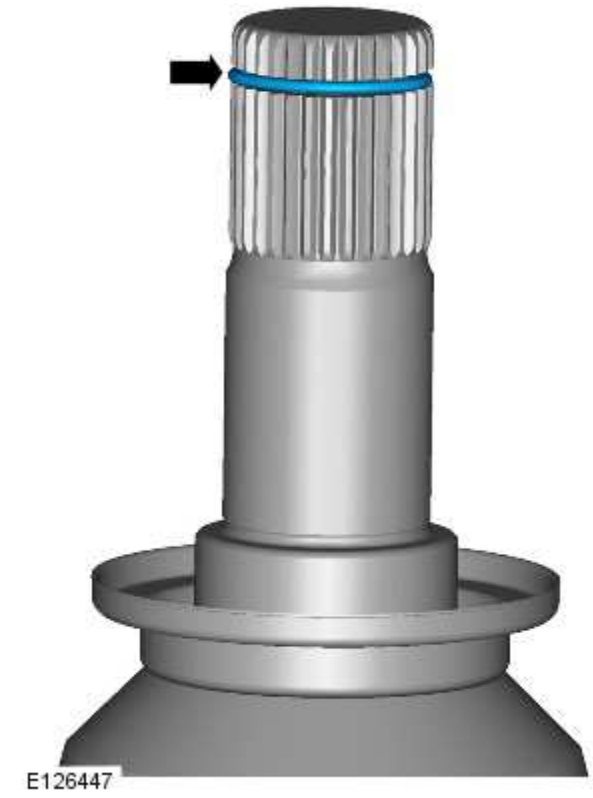

Remove and discard the clip from the RH halfshaft.

18.

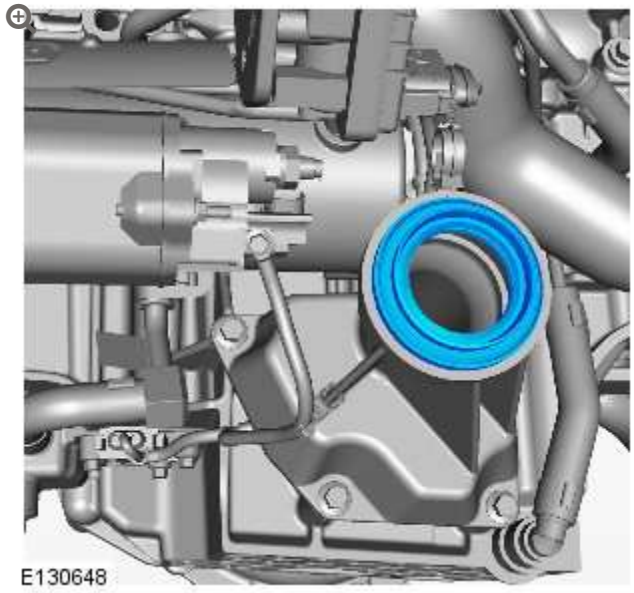

RH front: Remove and discard the halfshaft seal.

INSTALLATION

1. 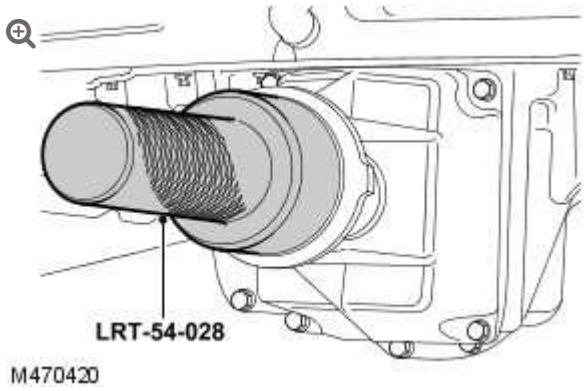

   Using the special tool, install a new halfshaft seal.

   - Lubricate the seal with clean differential fluid.

2. RH front: With assistance, install the wheel knuckle.

   - Install a new circlip.

3. Secure the wheel knuckle assembly to the shock absorber and spring assembly.

   - Tighten the nuts and bolts to 250 Nm (184 lb.ft).

4. Secure the RH tie rod end.

   - Install a new nut and tighten to 80 Nm (59 lb.ft).

5. **CAUTION:**

   Only tighten the nuts and bolts when the suspension is in the normal drive position.

   Secure the RH rear lower arm.

   - Tighten the nut to 80 Nm (59 lb.ft).
   -

Tighten the tie rod bolt to 165 Nm (122 lb.ft) plus a further 90 degrees.

6. **CAUTION:**

   Only tighten the nuts and bolts when the suspension is in the normal drive position.

   Secure the RH front lower arm.

   - Tighten the nut to 80 Nm (59 lb.ft).
   - Tighten the lower arm bolt to 165 Nm (122 lb.ft) plus a further 90 degrees.

7. RH side front: Secure the suspension height sensor.

8. Secure the stabilizer bar links.

   - Tighten the nuts to 100 Nm (74 lb.ft).

9. **NOTE:**

   RH side only.

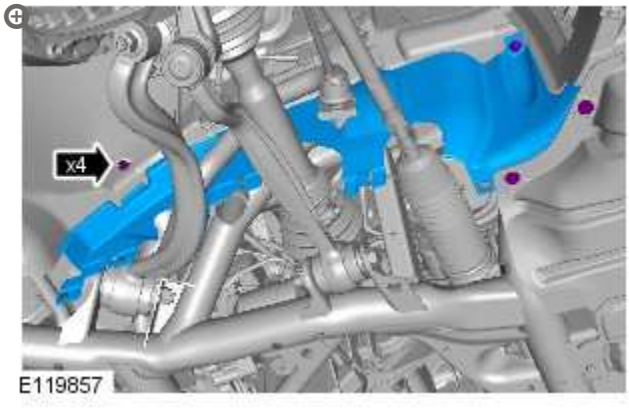

Install the fender splash shield upper extension panel.

10. **NOTE:**

RH side only.

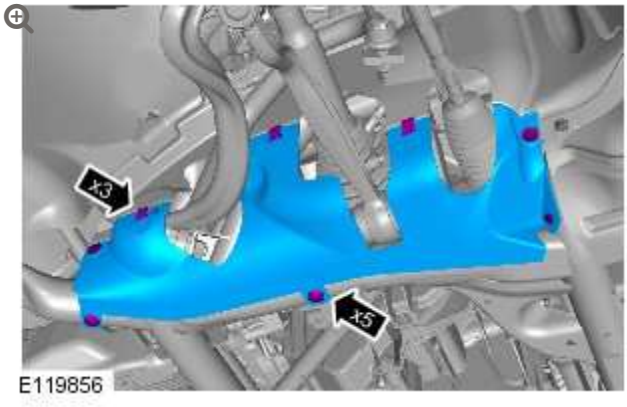

Install the fender splash shield.

11. Secure the RH front ABS sensor and wiring harness.
    - Apply anti-seize compound to the ABS sensor.
    - Tighten the bolt to 8 Nm (6 lb.ft)
    - Secure the clip.

12. Install the RH front brake disc.
    For additional information, refer to: Brake Disc - Vehicles With: Standard Brakes (206-03 Front Disc Brake, Removal and Installation).

13. Install the front wheels and tires.
    - Tighten the wheel nuts to 140 Nm (103 lb.ft).

14. Check and top-up the differential case.
    - Remove the container.

15.

Check, and if necessary, adjust the wheel alignment.

For additional information, refer to: Four-Wheel Alignment (204-00 Suspension System - General Information, General Procedures).

FRONT DRIVE HALFSHAFTS

HALFSHAFT SEAL RH – VEHICLES WITHOUT: HIGH PERFORMANCE BRAKES

(G1250056)

REMOVAL AND INSTALLATION

SPECIAL TOOL(S)



205-754 (LRT-54-027)

Ball joint separator



211-314 (LRT-57-036)

Ball joint separator



205-735 (LRT-54-026)

Remover halfshaft inboard joint



205-736 (LRT-54-028)

Oil seal installer

REMOVAL

1.

WARNING:

Do not work on or under a vehicle supported only by a jack. Always support the vehicle on safety stands.

Raise the front of the vehicle.

2. Remove the front road wheels and tires.

3. Remove the RH front brake disc.
For additional information, refer to: Brake Disc - Vehicles With: Standard Brakes (206-03 Front Disc Brake, Removal and Installation).

4. 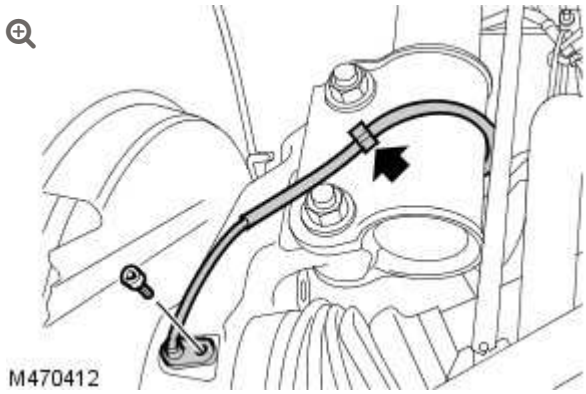

Release the RH front anti-lock brake system (ABS) sensor and wiring harness.

- Release from the clip.
- Remove the bolt.

5. **NOTE:**

RH side only.

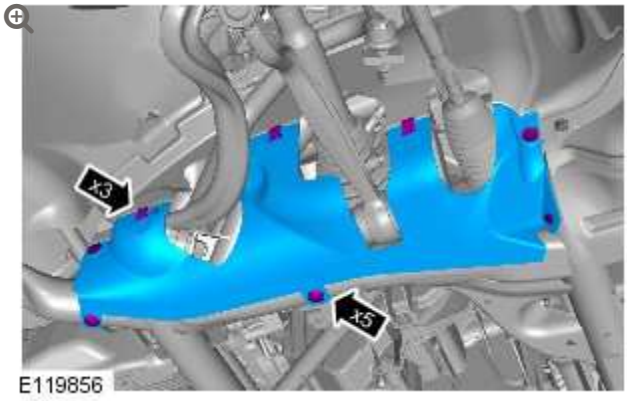

Remove the fender splash shield.

6.

NOTE:

RH side only.

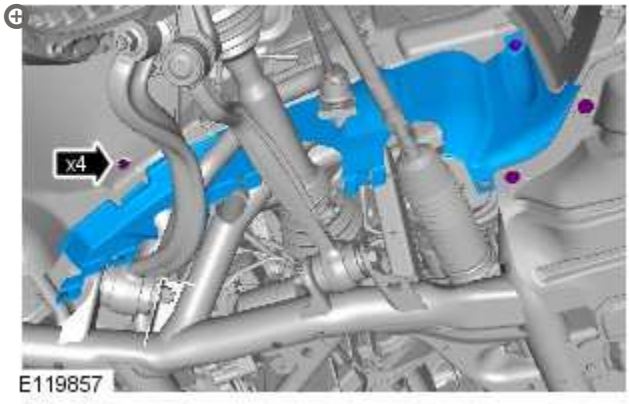

Remove the fender splash shield upper extension panel.

7.

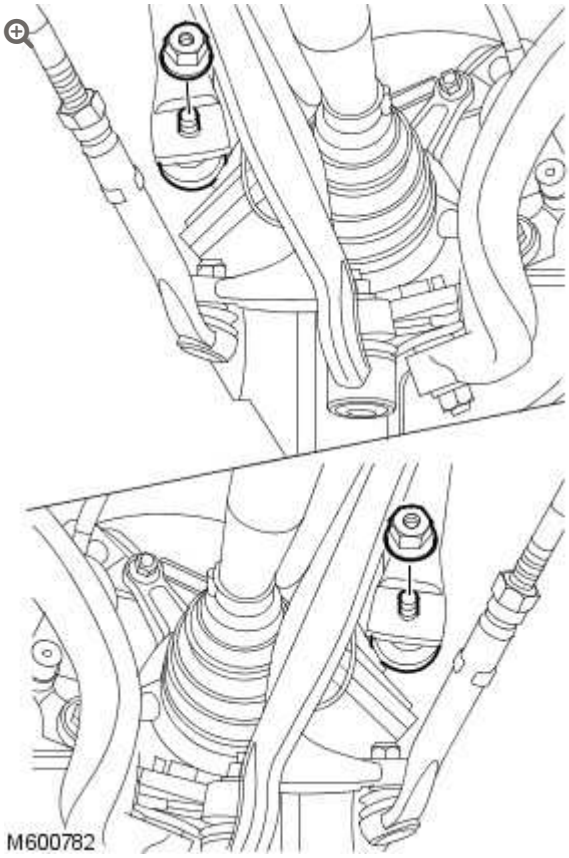

Release the stabilizer bar links from the stabilizer bar.

- Remove the 2 nuts.

8.

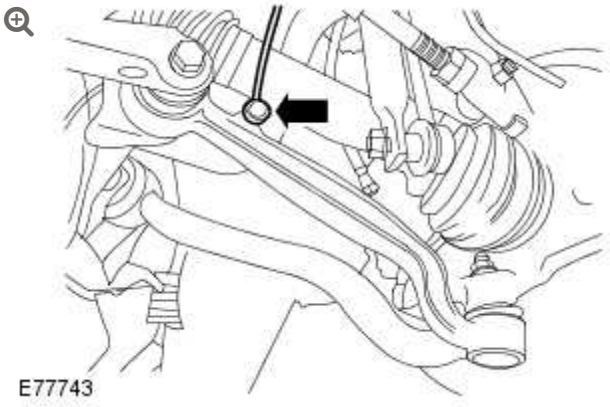

RH side front: Release the suspension height sensor.

9.

CAUTION:

Make sure the ball joint seal is not damaged. A damaged seal will lead to the premature failure of the joint.

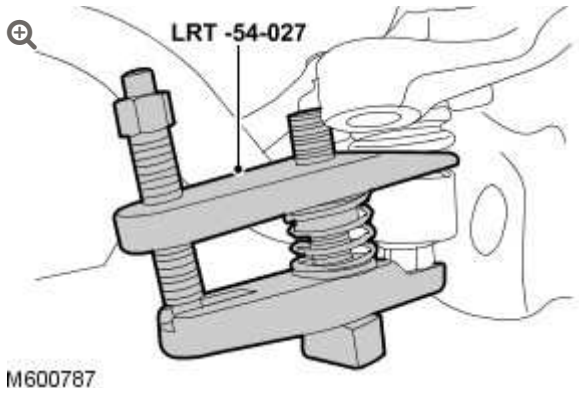

Using the special tool release the RH front lower arm.

- Remove the nut.
- Loosen the nut and bolt.

10.

CAUTION:

Make sure the ball joint seal is not damaged. A damaged seal will lead to the premature failure of the joint.

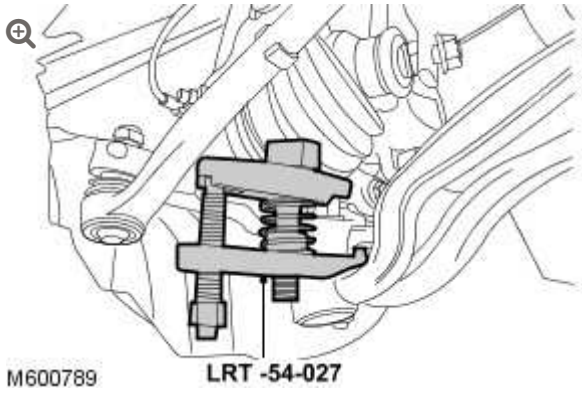

Using the special tool release the RH rear lower arm.

- Loosen the nut.
- Remove the nut.

11. Loosen the RH tie rod end locking nut.

12. **CAUTION:**

Make sure the ball joint seal is not damaged. A damaged seal will lead to the premature failure of the joint.

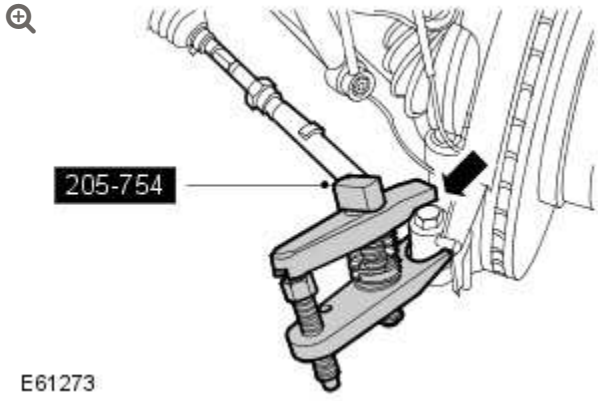

Using the special tool release the RH tie rod end.

- Remove and discard the nut.

13. Position a container to collect the fluid spillage.

14. 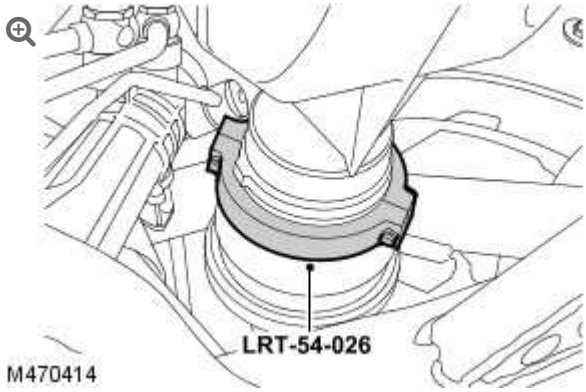

Install the special tool, to the inner halfshaft joint.

15. Release the clip.

16. 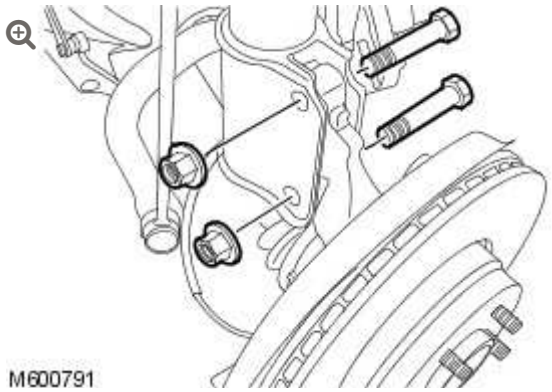

RH front: With assistance, remove the halfshaft and wheel knuckle assembly.

- Remove the 2 nuts and 2 bolts.

17.

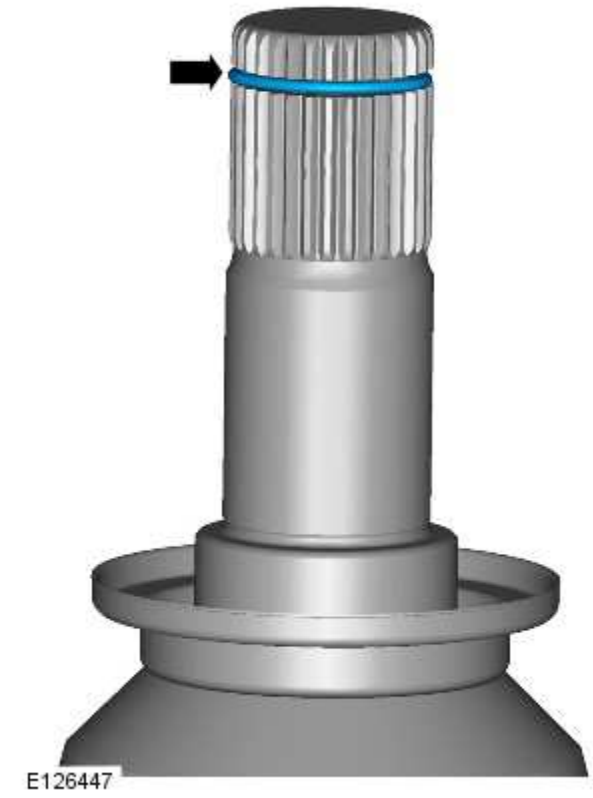

Remove and discard the clip from the RH halfshaft.

18.

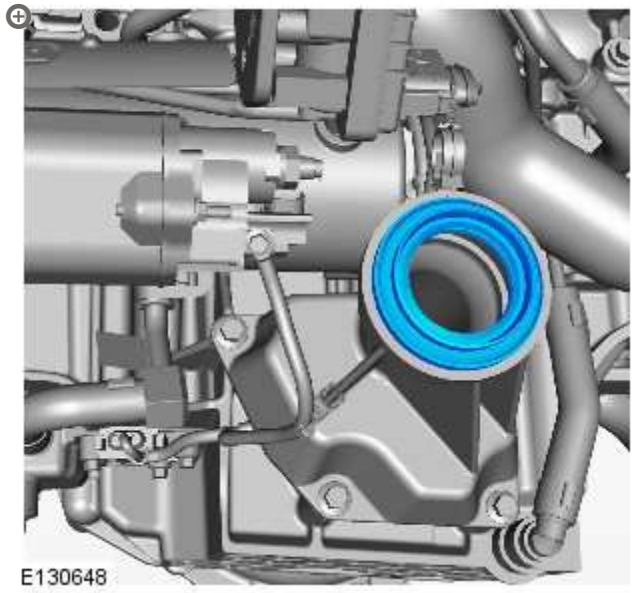

RH front: Remove and discard the halfshaft seal.

INSTALLATION

1. 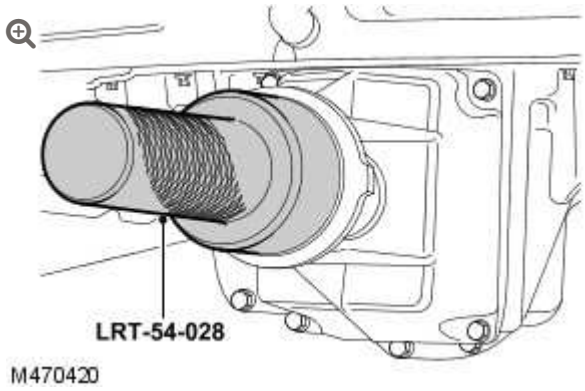

   Using the special tool, install a new halfshaft seal.

   - Lubricate the seal with clean differential fluid.

2. RH front: With assistance, install the wheel knuckle.

   - Install a new circlip.

3. Secure the wheel knuckle assembly to the shock absorber and spring assembly.

   - Tighten the nuts and bolts to 250 Nm (184 lb.ft).

4. Secure the RH tie rod end.

   - Install a new nut and tighten to 80 Nm (59 lb.ft).

5. **CAUTION:**

   Only tighten the nuts and bolts when the suspension is in the normal drive position.

   Secure the RH rear lower arm.

   - Tighten the nut to 80 Nm (59 lb.ft).
   -

Tighten the tie rod bolt to 165 Nm (122 lb.ft) plus a further 90 degrees.

6. **CAUTION:**

   Only tighten the nuts and bolts when the suspension is in the normal drive position.

   Secure the RH front lower arm.

   - Tighten the nut to 80 Nm (59 lb.ft).
   - Tighten the lower arm bolt to 165 Nm (122 lb.ft) plus a further 90 degrees.

7. RH side front: Secure the suspension height sensor.

8. Secure the stabilizer bar links.

   - Tighten the nuts to 100 Nm (74 lb.ft).

9. **NOTE:**

   RH side only.

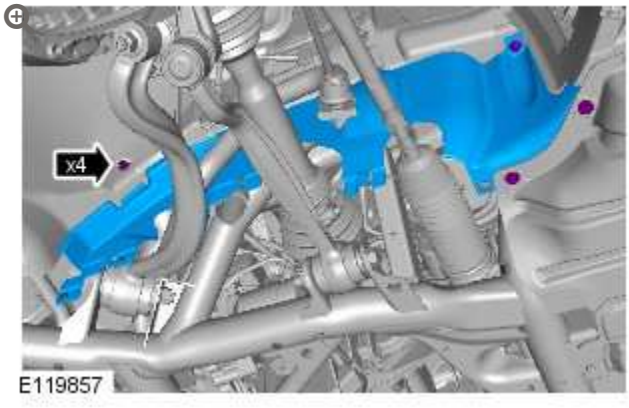

Install the fender splash shield upper extension panel.

10. **NOTE:**

RH side only.

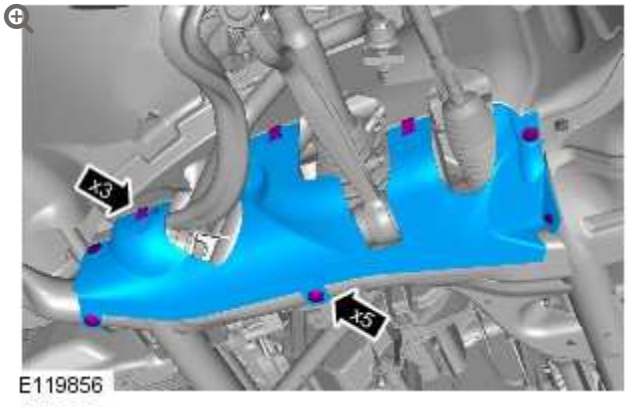

Install the fender splash shield.

11. Secure the RH front ABS sensor and wiring harness.
    - Apply anti-seize compound to the ABS sensor.
    - Tighten the bolt to 8 Nm (6 lb.ft)
    - Secure the clip.

12. Install the RH front brake disc.
    For additional information, refer to: Brake Disc - Vehicles With: Standard Brakes (206-03 Front Disc Brake, Removal and Installation).

13. Install the front wheels and tires.
    - Tighten the wheel nuts to 140 Nm (103 lb.ft).

14. Check and top-up the differential case.
    - Remove the container.

15.

Check, and if necessary, adjust the wheel alignment.

For additional information, refer to: Four-Wheel Alignment (204-00 Suspension System - General Information, General Procedures).

REAR DRIVE HALFSHAFTS

HALFSHAFT BEARING (G1249874)

REMOVAL AND INSTALLATION

51.10.29	BEARING - HALFSHAFT - EACH - RENEW	ALL DERIVATIVES	2.2	USED WITHINS	+

SPECIAL TOOL(S)



308-005 (LRT-37-004/2)

Axle oil seal remover



100-012 (LRT-99-004)

Impulse extractor



205-819

Halfshaft bearing installer

REMOVAL

1. **WARNING:**

   Do not work on or under a vehicle supported only by a jack. Always support the vehicle on safety stands.

   Raise and support the vehicle.

2. Remove the wheel and tire.

3.

Remove the halfshaft.

For additional information, refer to: Rear Halfshaft (205-05, Removal and Installation).

4.

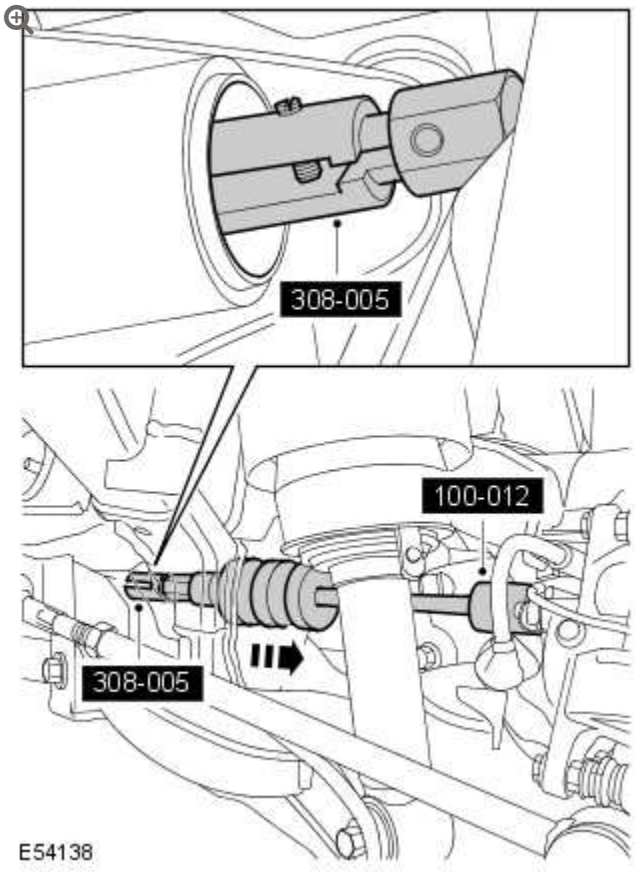

Using the special tool, remove and discard the halfshaft bearing.

INSTALLATION

1.

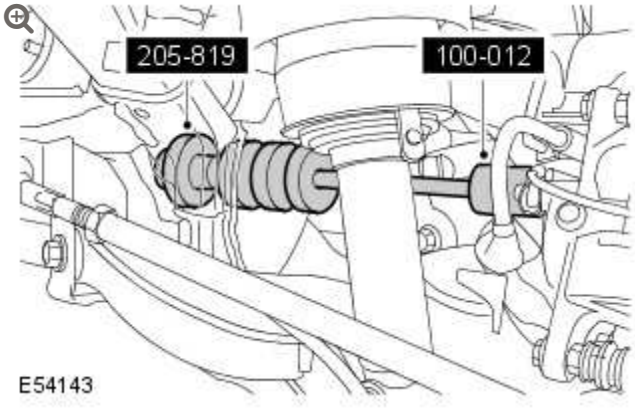

Using the special tools, install a new halfshaft bearing.

2. Install the halfshaft.
   For additional information, refer to: Rear Halfshaft (205-05, Removal and Installation).

3. Install the wheel and tire.
   - Tighten the wheel nuts to 140 Nm (103 lb.ft).

REAR DRIVE HALFSHAFTS

INNER CONSTANT VELOCITY (CV) JOINT BOOT (G1249873)

REMOVAL AND INSTALLATION

47.10.16	BOOT - INNER JOINT - RENEW	ALL DERIVATIVES	1.7	USED WITHINS	+
47.11.16	BOOT - INNER JOINT - RENEW	ALL DERIVATIVES	2.4	USED WITHINS	+

REMOVAL

1. **WARNING:**

   Do not work on or under a vehicle supported only by a jack. Always support the vehicle on safety stands.

   Raise and support the vehicle.

2. Remove the wheel and tire.

3. Remove the halfshaft.
   For additional information, refer to: Rear Halfshaft (205-05, Removal and Installation).

4. Clamp the halfshaft in a vise.

5. 

   Remove and discard the 2 clamps from the inner constant velocity (CV) joint boot.

6. Slide the inner CV joint boot along the halfshaft to gain access to the inner CV joint.

7. 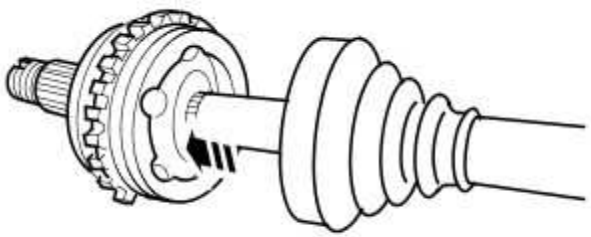

   Using a drift against the inner part of the CV joint, remove the CV joint from the halfshaft.

   - Remove and discard the snap ring.

8. Remove the inner CV joint boot.

INSTALLATION

1. Clean the components.

2. Install the inner CV joint boot.

3. **CAUTION:**

   Pull on the inner CV joint to make sure the snap ring has fully engaged.

   Install the inner CV joint.

   - Install a new snap ring.
   - Position the inner CV joint on to the halfshaft, press the snap ring into it's groove and push the inner CV joint fully on to the halfshaft.

4. Pack the inner CV joint with the grease supplied.

5. Secure the inner CV joint boot to the inner CV joint.
   - Secure with the new clamps.

6. Install the halfshaft.
   For additional information, refer to: Rear Halfshaft (205-05, Removal and Installation).

7. Install the wheel and tire.
   - Tighten the wheel nuts to 140 Nm (103 lb.ft).

REAR DRIVE HALFSHAFTS

OUTER CONSTANT VELOCITY (CV) JOINT BOOT (G1249872)

REMOVAL AND INSTALLATION

47.11.03	BOOT - CONSTANT VELOCITY (CV) JOINT AND HOUSING - OUTER - RENEW	ALL DERIVATIVES	2.4	USED WITHINS	+

REMOVAL

1. **WARNING:**

   Do not work on or under a vehicle supported only by a jack. Always support the vehicle on safety stands.

   Raise and support the vehicle.

2. Remove the wheel and tire.

3. Remove the halfshaft.
   For additional information, refer to: Rear Halfshaft (205-05, Removal and Installation).

4. Clamp the halfshaft in a vise.

5. 

   Remove and discard the 2 clamps from the outer constant velocity (CV) joint boot.

6. Slide the outer CV joint boot along the halfshaft to gain access to the outer CV joint.

7. 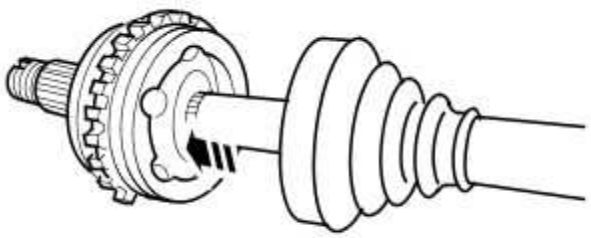

   Using a drift against the inner part of the CV joint, remove the CV joint from the halfshaft.

   - Remove and discard the snap ring.

8. Remove the outer CV joint boot.

INSTALLATION

1. Clean the components.

2. Install the outer CV joint boot.

3. **CAUTION:**

   Pull on the outer CV joint to make sure the snap ring has fully engaged.

   Install the outer CV joint.

   - Install a new snap ring.
   - Position the outer CV joint on to the halfshaft, press the snap ring into it's groove and push the outer CV joint fully on to the halfshaft.

4. Pack the outer CV joint with the grease supplied.

5. Secure the outer CV joint boot to the outer CV joint.
   - Secure with the new clamps.

6. Install the halfshaft.
   For additional information, refer to: Rear Halfshaft (205-05, Removal and Installation).

7. Install the wheel and tire.
   - Tighten the wheel nuts to 140 Nm (103 lb.ft).

2012.0 RANGE ROVER (LM), 205-05

REAR DRIVE HALFSHAFTS

DIAGNOSIS AND TESTING

For additional information.

REFER to: Driveline System (205-00, Diagnosis and Testing).

REAR DRIVE HALFSHAFTS

DESCRIPTION AND OPERATION

Rear Drive Halfshaft Components

NOTE:

TDV8 version shown

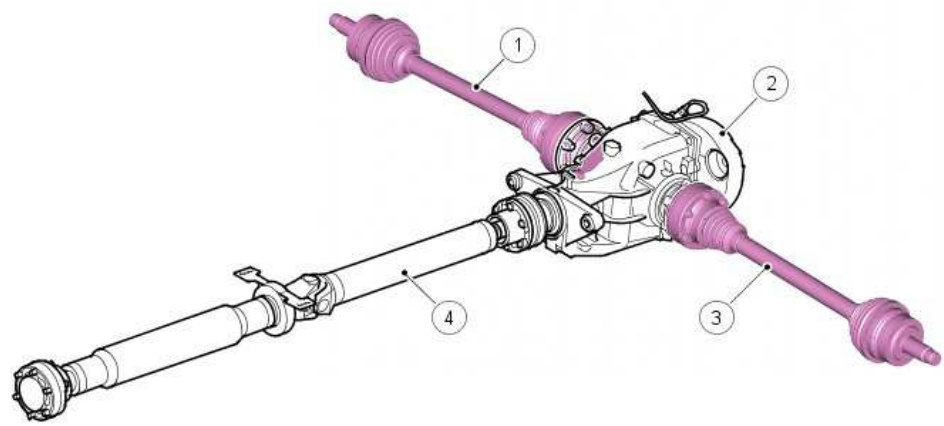

E59516

ITEM	DESCRIPTION
1	RH rear drive halfshaft
2	Rear differential
3	LH rear drive halfshaft

ITEM	DESCRIPTION
4	Rear driveshaft assembly

GENERAL

The rear drive halfshafts are identical in their construction with the LH shaft being slightly longer than the RH shaft. Each shaft has a constant velocity (CV) joint at each end to allow for suspension movement.

Rear Drive Halfshaft Assembly

NOTE:

4.2/4.4L V8 petrol version shown

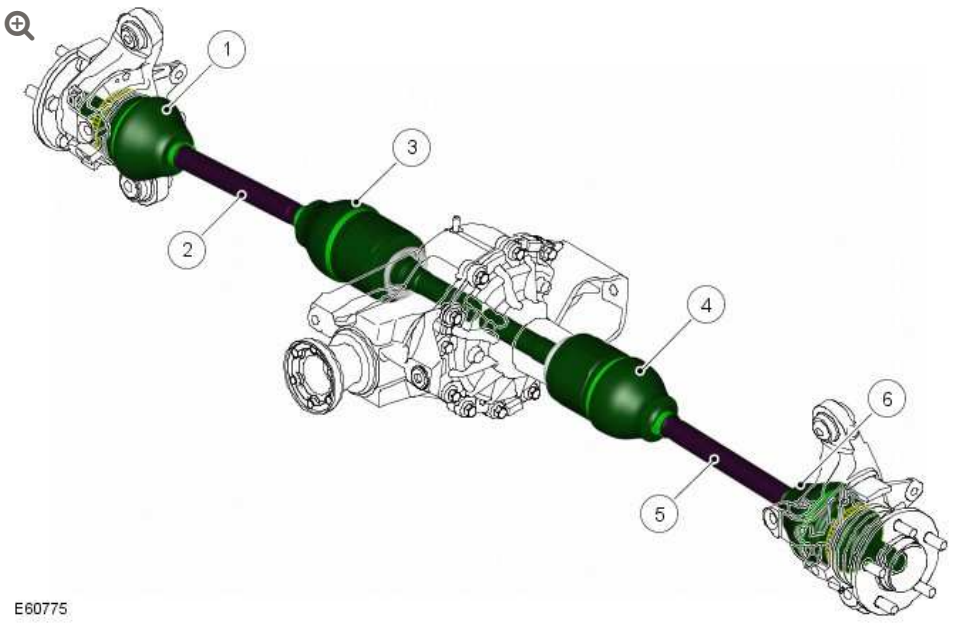

ITEM	DESCRIPTION
1	RH outer CV joint
2	RH rear drive halfshaft
3	RH inner CV joint

ITEM	DESCRIPTION
4	LH inner CV joint
5	LH rear drive halfshaft
6	LH outer CV joint

Each outer CV joint has a target wheel on the outer diameter. This target is used by the ABS wheel speed sensor for vehicle and wheel speed calculations.For additional information, refer to: (206-09A Anti-Lock Control - Traction Control)

Anti-Lock Control - Traction Control (Description and Operation),
Anti-Lock Control - Traction Control - 4.2L (Description and Operation),
Anti-Lock Control - Traction Control - 4.4L (Description and Operation).

Each rear drive halfshaft comprises 2 CV joints (inner and outer), boots and a solid barshaft, which is retained in the rear differential by a circlip.

The CV joints used on the rear drive halfshafts share the same design and operating principles as the front drive halfshafts CV joints (see 'Halfshaft Joint' section for more information on CV joints). The rear drive halfshaft inner joint hubs are retained by peening over the lip of the joint body.

REAR DRIVE HALFSHAFTS

REAR HALFSHAFT (G1249871)

REMOVAL AND INSTALLATION

47.11.01	SHAFT WITH BOTH JOINTS - RENEW	ALL DERIVATIVES	2.3	USED WITHINS	+

SPECIAL TOOL(S)



204-506/1 (LRT-60-030/1)

Halfshaft remover/replacer



204-506/5 (LRT-60-030/5)

Retainers - halfshaft remover/replacer



204-506/3 (LRT-60-030/3)

Halfshaft remover/replacer



204-506-01(LRT-60-030/4)

Halfshaft installer adapter



308-005 (LRT-37-004/2)

Axle oil seal remover



100-012 (LRT-99-004)

Impulse extractor



308-626/1

Installer halfshaft oil seal



308-626/2

Installer/Guide halfshaft oil seal

REMOVAL

CAUTIONS:

- Do not allow halfshafts to hang unsupported at one end or joint damage will occur.
- Do not store or install halfshafts with joints at maximum articulation or damage may occur to the joint.
- Angularly Adjusted Roller (AAR) joints, used at the inboard end of some halfshafts have no internal retaining mechanism and can separate.

1. **WARNING:**

   Do not work on or under a vehicle supported only by a jack. Always support the vehicle on safety stands.

   Raise and support the vehicle.

2. Drain the differential lubricant.
   For additional information, refer to: Differential Draining and Filling (205-02 Rear Drive Axle/Differential, General Procedures).

3. Remove the rear wheels and tires

4. Remove the wheel knuckle.
   For additional information, refer to: Wheel Knuckle (204-02 Rear Suspension, Removal and Installation).

5. Release the halfshaft from the differential housing.
   - Position a container to collect the oil spillage.

6.

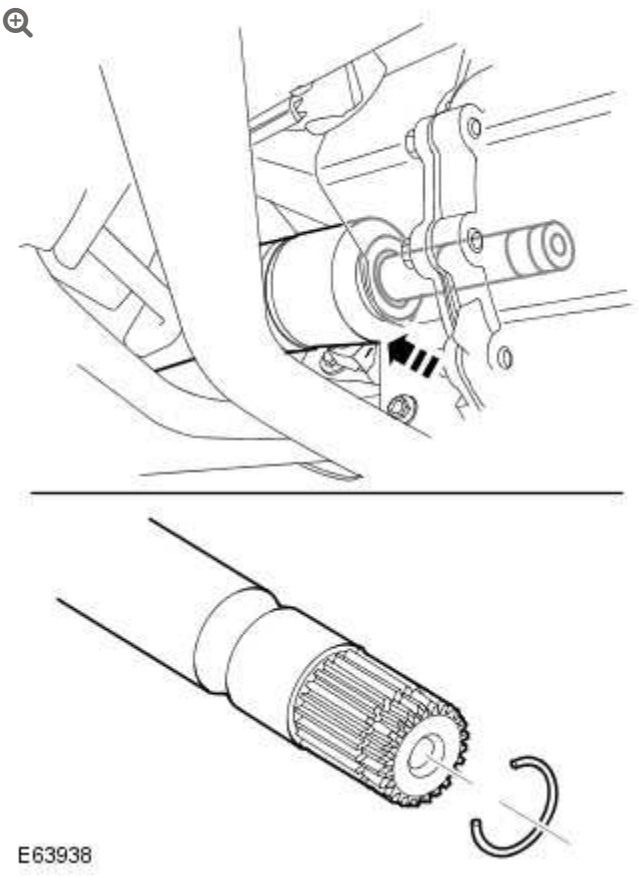

With assistance, remove the halfshaft.

- Remove and discard the snap ring.

7.

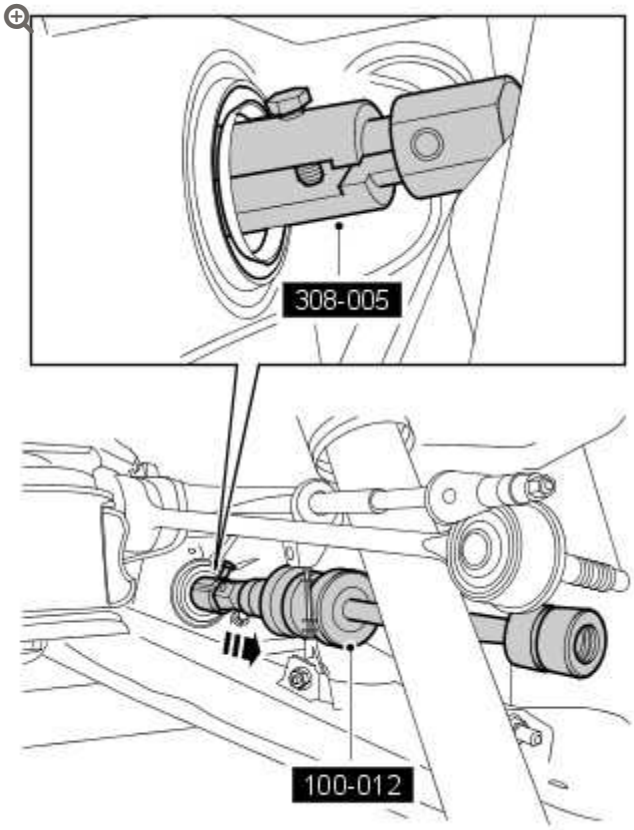

Using the special tools, remove and discard the halfshaft oil seal.

INSTALLATION

1. **CAUTION:**

   The seal protector must be left in place until the halfshaft has been installed.

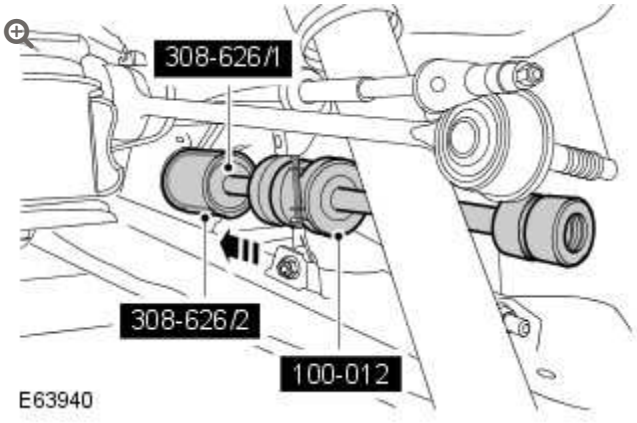

Using the special tools, install a new halfshaft oil seal.

- Clean the component mating faces.

2.

CAUTION:

Pull on the halfshaft inboard joint to make sure the clip has fully engaged and retains the halfshaft inboard joint within the differential case.

With assistance, install the halfshaft.

- Clean the component mating faces.
- Install the snap ring.
- Open the halfshaft oil seal protector.

3.

NOTE:

The oil seal protector is designed to break into two pieces.

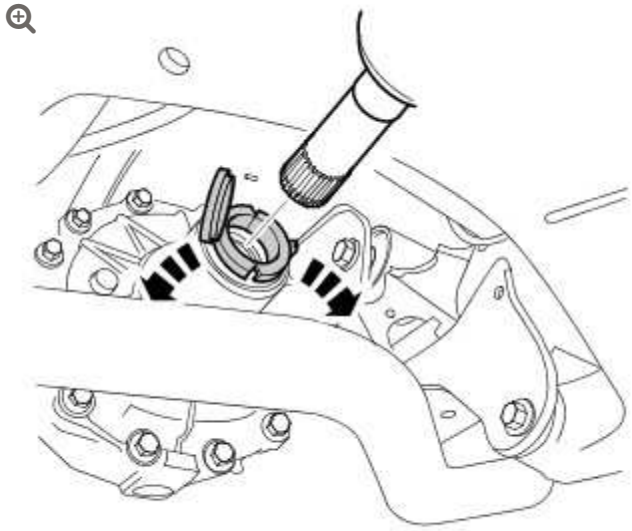

E63941

Remove and discard the halfshaft oil seal protector.

4. Install the wheel knuckle.
   For additional information, refer to: Wheel Knuckle (204-02 Rear Suspension, Removal and Installation).

5. Install the wheels and tires.
   - Tighten the wheel nuts to 140 Nm (103 lb.ft).

6. **CAUTION:**

   Do not fill the differential with lubricant up to the filler plug. The filler plug is only used to fill the deferential with lubricant, and not to act as a level indicator.

   Fill the differential with the correct amount of lubricant.
   For additional information, refer to: Differential Draining and Filling (205-02 Rear Drive Axle/Differential, General Procedures).

BRAKE SYSTEM – GENERAL INFORMATION

SPECIFICATIONS

Brake Hydraulic Fluid

Item	Specification
* Recommended hydraulic fluid	SHELL DONAX YB DOT4 ESL FLUID

CAUTION:

* If the above fluid is not available, use a low viscosity DOT 4 brake fluid meeting ISO 4925 Class 6 and Land Rover LRES22BF03 requirements.

General Specification

Item	Specification
Footbrake type:	
Vehicles without Brembo brakes	Hydraulic, servo assisted, self-adjusting with front/rear split hydraulic system, twin piston sliding calipers to the front and single piston sliding calipers to the rear
Vehicles with Brembo brakes	Hydraulic, servo assisted, self-adjusting with front/rear split hydraulic system, opposed six piston calipers to the front and single piston sliding calipers to the rear

Parking brake type	Twin shoe (leading/trailing) operating on rear wheels and controlled from park brake lever in floor console via twin cables

BRAKE SYSTEM - GENERAL INFORMATION

BRAKE SYSTEM BLEEDING - VEHICLES WITH: HIGH PERFORMANCE BRAKES

(G1225239)

GENERAL PROCEDURES

70.25.02	BRAKES - COMPLETE SYSTEM - BLEED	ALL DERIVATIVES	0.7	USED WITHINS
70.25.02.36	BRAKES - COMPLETE SYSTEM - BLEED - BREMBO/SPORTS BRAKES FITTED	ALL DERIVATIVES	0.8	USED WITHINS

WARNING:

If any components upstream of the Hydraulic Control Unit (HCU), including the HCU itself are replaced, the brake system must be bled using Land Rover approved diagnostic equipment. This will ensure that all air is expelled from the new component(s).

NOTES:

- Bleeding of the complete brake system must be carried out using Land Rover approved diagnostic equipment. Where only the primary or secondary brake circuits have been disturbed in isolation, it should only be necessary to bleed that circuit. Partial bleeding of the hydraulic system is only permissible if a brake tube or hose has been disconnected with only minimal loss of fluid.
- Some variation in the illustrations may occur, but the essential information is always correct.

1. **WARNING:**

   Do not work on or under a vehicle supported only by a jack. Always support the vehicle on safety stands.

   Raise and support the vehicle.

2. Check that the brake fluid lines are secure and that there are no signs of a brake fluid leak. If a brake fluid leak is detected, investigate and rectify the cause of the leak before bleeding the brakes.

3. **WARNING:**

   Do not allow dirt or foreign liquids to enter the reservoir. Use only new brake fluid of the correct specification from airtight containers. Do not mix brands of brake fluid as they may not be compatible.

CAUTIONS:

- Brake fluid will damage paint finished surfaces. If spilled, immediately remove the fluid and clean the area with water.
- The brake fluid reservoir must remain full with new, clean brake fluid at all times during bleeding.

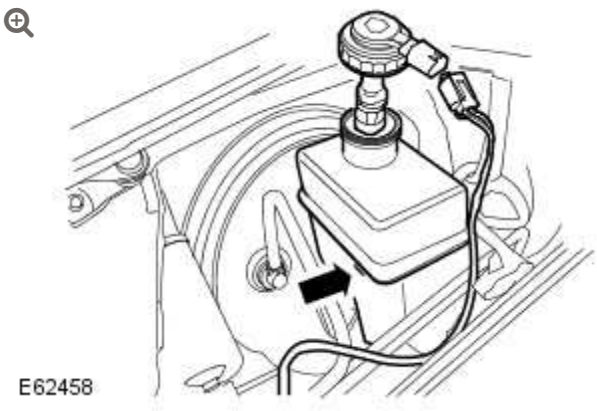

Fill the brake fluid reservoir to the MAX mark.

- Disconnect the brake fluid reservoir electrical connector.
- Remove the brake fluid reservoir cap.

4. Conduct the bleed procedure with the engine running.

5. Connect the diagnostic tool to the vehicle, select diagnostic and proceed as directed for bleeding the brake system.

6.

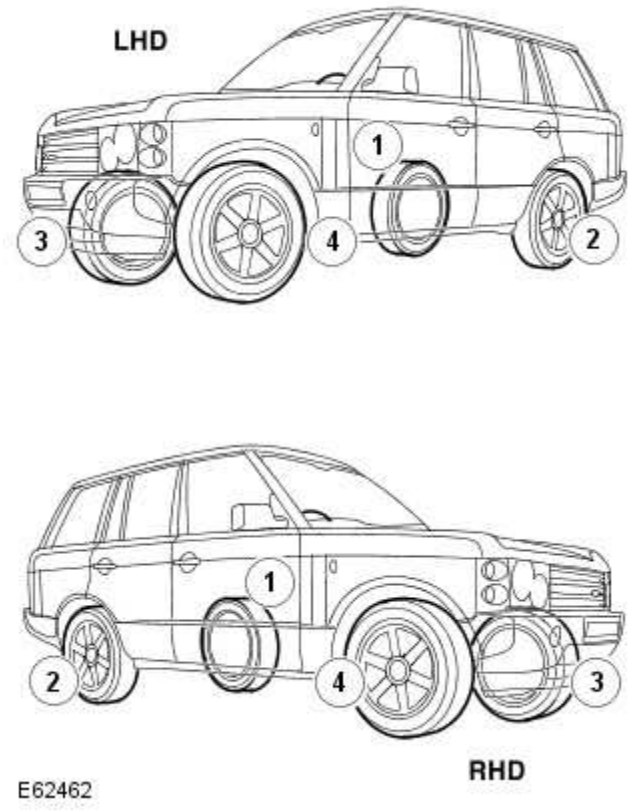

Starting at the brake caliper furthest away from the brake master cylinder, loosen the bleed screw by one-half to three-quarters of a turn.

7. Install the bleed tube to the brake caliper bleed screw and immerse the free end of the bleed tube in a bleed jar containing a small quantity of approved brake fluid.
   - Hold the bleed container at least 300 mm above the Caliper that is being bled.

8. **CAUTION:**

   The brake fluid reservoir must remain full with new, clean brake fluid at all times during bleeding.

With assistance, depress the brake pedal steadily through to 2/3 of its full stroke.

9. With the brake pedal held down, close bleed screw and then return the brake pedal to 1/3 of its full stroke and hold.

10. Repeat steps 8 and 9, 28 times for the rear brake and 10 times for the front brake.

11. At the end of the bleed process, depress and hold the brake pedal down.

12. **CAUTION:**

Make sure the bleed screw cap is installed after bleeding. This will prevent corrosion to the bleed screw.

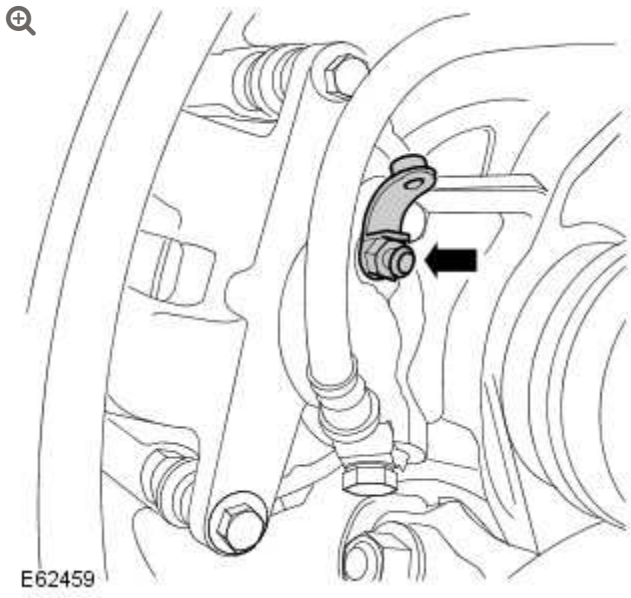

With the brake pedal fully depressed, tighten the bleed screw.

-

Tighten the front caliper bleed screws to 19 Nm (14 lb.ft).

- Tighten the rear caliper bleed screws to 10 Nm (7 lb.ft).

13. Fill the brake fluid reservoir to the MAX mark.

14. **WARNING:**

> High performance front brake calipers have two bleed points. The inner bleed point must be bled before the outer bleed point. Braking efficiency may be seriously impaired if an incorrect bleed sequence is used.

CAUTION:

> Make sure the bleed screw cap is installed after bleeding. This will prevent corrosion to the bleed screw.

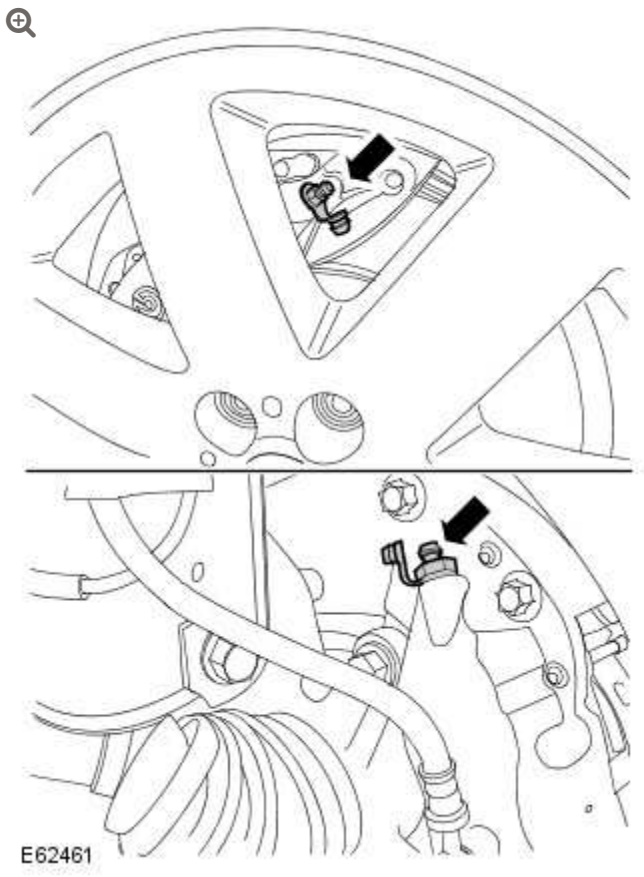

Repeat the brake bleeding procedure for each front brake caliper, following the above sequence.

- If access is restricted to the front caliper outer bleed screws, rotate the road wheels to gain access.
- Tighten the bleed screws to 19 Nm (14 lb.ft).

15. Fill the brake fluid reservoir to the MAX mark.

16. Apply the brakes and check for leaks.

17. Install the brake fluid reservoir cap.
    - Connect the brake fluid reservoir electrical connector.

18. On completion, road test the vehicle and check the brake pedal operation. The pedal travel should be short with a firm feel.

BRAKE SYSTEM BLEEDING – VEHICLES WITH: STANDARD BRAKES (G1225240)

GENERAL PROCEDURES

70.25.02	BRAKES – COMPLETE SYSTEM – BLEED	ALL DERIVATIVES	0.7	USED WITHINS
70.25.02.36	BRAKES – COMPLETE SYSTEM – BLEED – BREMBO/SPORTS BRAKES FITTED	ALL DERIVATIVES	0.8	USED WITHINS

WARNING:

If any components upstream of the Hydraulic Control Unit (HCU), including the HCU itself are replaced, the brake system must be bled using Land Rover approved diagnostic equipment. This will ensure that all air is expelled from the new component(s).

NOTES:

- Bleeding of the complete brake system must be carried out using Land Rover approved diagnostic equipment. Where only the primary or secondary brake circuits have been disturbed in isolation, it should only be necessary to bleed that circuit. Partial bleeding of the hydraulic system is only permissible if a brake tube or hose has been disconnected with only minimal loss of fluid.
- Some variation in the illustrations may occur, but the essential information is always correct.

1. **WARNING:**

   Make sure to support the vehicle with axle stands.

   Raise and support the vehicle.

2. Check that the brake fluid lines are secure and that there are no signs of a brake fluid leak. If a brake fluid leak is detected, investigate and rectify the cause of the leak before bleeding the brakes.

3. **WARNING:**

   Do not allow dirt or foreign liquids to enter the reservoir. Use only new brake fluid of the correct specification from airtight containers. Do not mix brands of brake fluid as they may not be compatible.

CAUTIONS:

- Brake fluid will damage paint finished surfaces. If spilled, immediately remove the fluid and clean the area with water.
- The brake fluid reservoir must remain full with new, clean brake fluid at all times during bleeding.

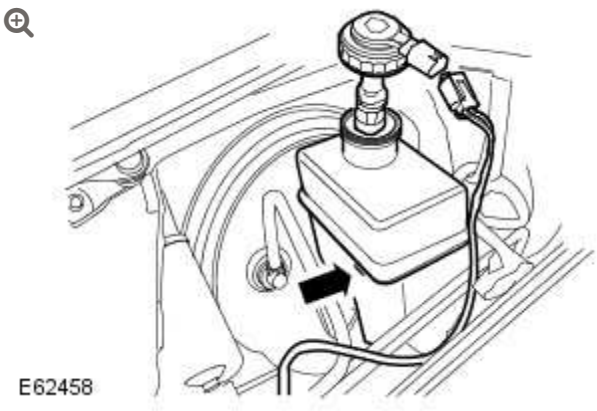

Fill the brake fluid reservoir to the MAX mark.

- Disconnect the brake fluid reservoir electrical connector.
- Remove the brake fluid reservoir cap.

4. Conduct the bleed procedure with the engine running.

5. Connect the diagnostic tool to the vehicle, select diagnostic and proceed as directed for bleeding the brake system.

6.

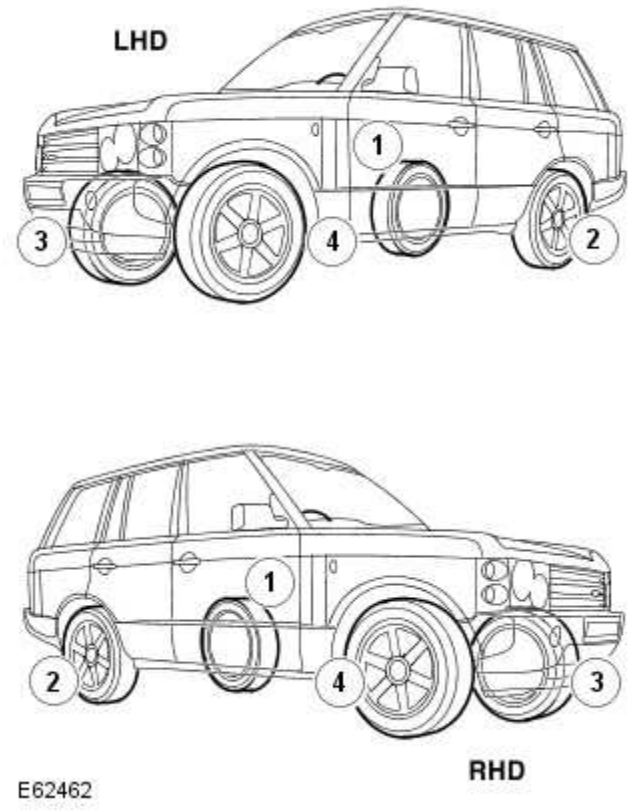

Starting at the brake caliper furthest away from the brake master cylinder, loosen the bleed screw by one-half to three-quarters of a turn.

7. Install the bleed tube to the brake caliper bleed screw and immerse the free end of the bleed tube in a bleed jar containing a small quantity of approved brake fluid.
   - Hold the bleed container at least 300 mm above the Caliper that is being bled.

8. **CAUTION:**

   The brake fluid reservoir must remain full with new, clean brake fluid at all times during bleeding.

With assistance, depress the brake pedal steadily through to 2/3 of its full stroke.

9. With the brake pedal held down, close bleed screw and then return the brake pedal to 1/3 of its full stroke and hold.

10. Repeat steps 8 and 9, 28 times for the rear brake and 10 times for the front brake.

11. At the end of the bleed process, depress and hold the brake pedal down.

12. **CAUTION:**

Make sure the bleed screw cap is installed after bleeding. This will prevent corrosion to the bleed screw.

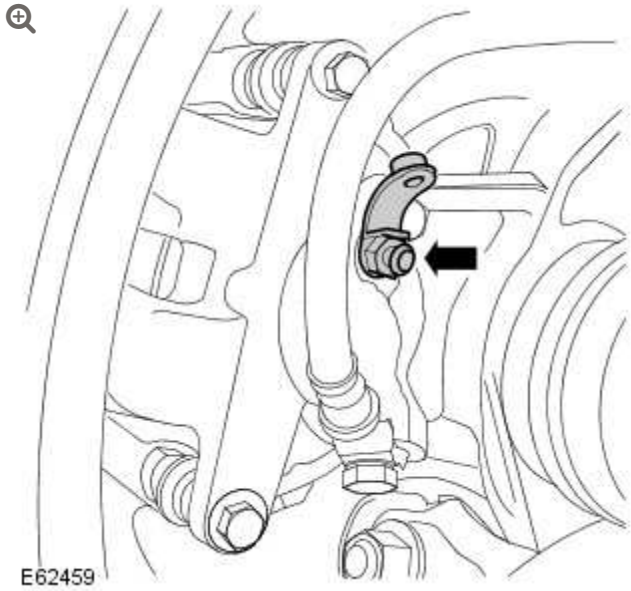

With the brake pedal fully depressed, tighten the bleed screw to 10 Nm (7 lb.ft).

13. Fill the brake fluid reservoir to the MAX mark.

14. **WARNING:**

> Braking efficiency may be seriously impaired if an incorrect bleed sequence is used.

Repeat the brake bleeding procedure for each brake caliper, following the above sequence.

15. Fill the brake fluid reservoir to the MAX mark.

16. Apply the brakes and check for leaks.

17. Install the brake fluid reservoir cap.
    - Connect the brake fluid reservoir electrical connector.

18. On completion, road test the vehicle and check the brake pedal operation. The pedal travel should be short with a firm feel.

BRAKE SYSTEM – GENERAL INFORMATION

BRAKE SYSTEM PRESSURE BLEEDING (G1225241)

GENERAL PROCEDURES

70.25.02	BRAKES - COMPLETE SYSTEM - BLEED	ALL DERIVATIVES	0.7	USED WITHINS
70.25.06	BRAKES - HIGH PRESSURE SYSTEM - BLEED	ALL DERIVATIVES	0.6	USED WITHINS

NOTE:

Some variation in the illustrations may occur, but the essential information is always correct.

All vehicles

1.

WARNING:

Make sure to support the vehicle with axle stands.

Raise and support the vehicle.

2. Check that the brake fluid lines are secure and that there are no signs of a brake fluid leak. If a brake fluid leak is detected, investigate and rectify the cause of the leak before bleeding the brakes.

3. **WARNING:**

> Do not allow dirt or foreign liquids to enter the reservoir. Use only new brake fluid of the correct specification from airtight containers. Do not mix brands of brake fluid as they may not be compatible.

CAUTIONS:

> - Brake fluid will damage paint finished surfaces. If spilled, immediately remove the fluid and clean the area with water.
> - The brake fluid reservoir must remain full with new, clean brake fluid at all times during bleeding.

Fill the brake fluid reservoir to the MAX mark.

- Disconnect the brake fluid reservoir electrical connector.
- Remove the brake fluid reservoir cap.

4. Conduct the bleed procedure with the engine running.

5.

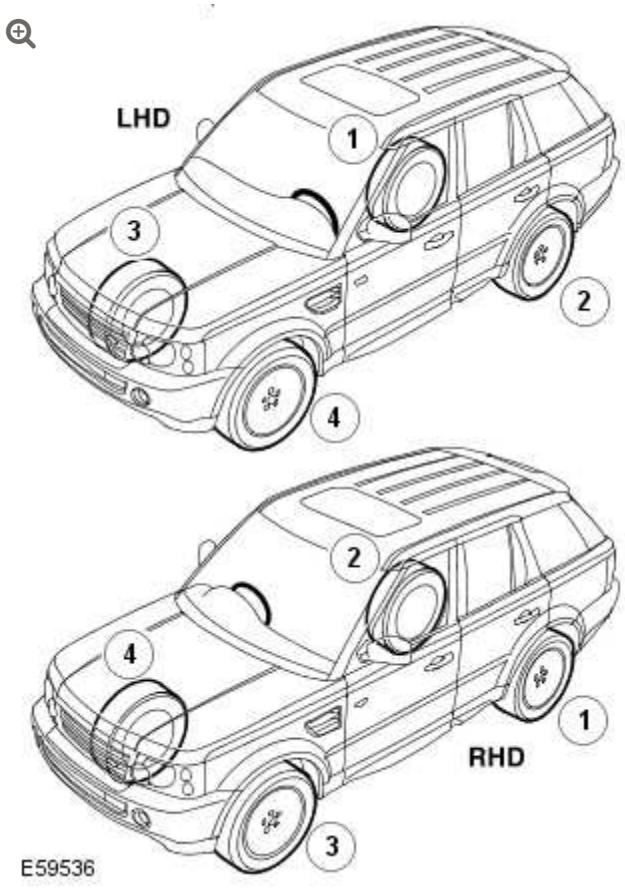

Starting at the brake caliper furthest away from the brake master cylinder, loosen the bleed screw by one-half to three-quarters of a turn.

6.
- Install the bleed tube to the brake caliper bleed screw and immerse the free end of the bleed tube in a bleed jar containing a small quantity of approved brake fluid.
- Hold the bleed container at least 300 mm above the Caliper that is being bled.

7.

CAUTION:

The brake fluid reservoir must remain full with new, clean brake fluid at all times during bleeding.

With assistance, depress the brake pedal steadily through to 2/3 of its full stroke.

8. With the brake pedal held down, close bleed screw and then return the brake pedal to 1/3 of its full stroke and hold.

9. Repeat steps 7 and 8, 28 times for the rear brake and 10 times for the front brake.

10. At the end of the bleed process, depress and hold the brake pedal down.

11. **CAUTION:**

    Make sure the bleed screw cap is installed after bleeding. This will prevent corrosion to the bleed screw.

    With the brake pedal fully depressed, tighten the bleed screw.

    - On vehicles with high performance brakes, tighten the front caliper bleed screw to 19 Nm (14 lb.ft).
    - On vehicles with standard brakes, tighten the front caliper bleed screw to 10 Nm (7 lb.ft).
    - Tighten the rear caliper bleed screws to 10 Nm (7 lb.ft).

12. Fill the brake fluid reservoir to the MAX mark.

13.

WARNING:

> Braking efficiency may be seriously impaired if an incorrect bleed sequence is used.

Repeat the brake bleeding procedure for each brake caliper, following the above sequence.

ℹ	Vehicles with supercharger

14. **WARNING:**

> High performance front brake calipers have two bleed points. The inner bleed point must be bled before the outer bleed point. Braking efficiency may be seriously impaired if an incorrect bleed sequence is used.

Repeat the brake bleeding procedure for each front brake caliper, following the above sequence.

- If access is restricted to the front caliper outer bleed screws, rotate the road wheels to gain access.
- Tighten the bleed screws to 19 Nm (14 lb.ft).

ℹ	All vehicles

15. Fill the brake fluid reservoir to the MAX mark.

16. Apply the brakes and check for leaks.

17. Install the brake fluid reservoir cap.

- Connect the brake fluid reservoir electrical connector.

18. On completion, road test the vehicle and check the brake pedal operation. The pedal travel should be short with a firm feel.

BRAKE SYSTEM – GENERAL INFORMATION

DIAGNOSIS AND TESTING

PRINCIPLE OF OPERATION

For a detailed description of the brake system, refer to the relevant Description and Operation sections in the workshop manual.

INSPECTION AND VERIFICATION

CAUTION:

Diagnosis by substitution from a donor vehicle is NOT acceptable. Substitution of control modules does not guarantee confirmation of a fault, and may also cause additional faults in the vehicle being tested and/or the donor vehicle.

Visually examine the front and rear wheel and tire assemblies for damage such as uneven wear patterns, tread worn out or sidewall damage. Verify the tires are the same size, type and, where possible, same manufacturer. Replace the damaged wheel or excessively worn tire.

Wheels and tires must be cleared of any foreign matter and tire pressures adjusted to the correct specification.

If the tires exhibit uneven wear or feathering, the cause must be corrected. Check the steering and suspension components for damage or wear and, if necessary, check and adjust front wheel alignment.

Visual Inspection

MECHANICAL	ELECTRICAL
▪ Brake master cylinder ▪ Brake caliper piston(s) ▪ Brake discs ▪ Wheel bearings ▪ Brake pads ▪ Power brake booster ▪ Brake pedal linkage ▪ Brake booster vacuum hose ▪ Tires ▪ Debris	▪ Parking brake actuator ▪ Parking brake module ▪ Parking brake switch ▪ Damaged or corroded wiring harness ▪ Brake master cylinder fluid level switch

Road Test

Carry out a road test to compare actual vehicle braking performance with the performance standards expected by the driver. The ability of the test driver to make valid comparisons and detect performance deficiencies will depend on experience.

The driver should have a thorough knowledge of brake system operation and accepted general performance guidelines to make good comparisons and detect performance concerns.

An experienced brake technician will always establish a route that will be used for all brake diagnosis road tests. The roads selected will be reasonably smooth and level. Gravel or bumpy roads are not suitable because the surface does not allow the tires to grip the road equally. Crowned roads should be avoided because of the large amount of weight shifted to the low set of wheels on this type of road. Once the route is established and consistently used, the road surface variable can be eliminated from the test results.

Before a road test, obtain a complete description of the customer concerns or suspected condition. From the description, the technician's experience will allow the technician to match possible causes with symptoms. Certain components will be tagged as possible suspects while others will be eliminated by the evidence. More importantly, the customer description can reveal unsafe conditions which should be checked or corrected before the road test. The description will also help form the basic approach to the road test by narrowing the concern to specific components, vehicle speed or conditions.

Begin the road test with a general brake performance check. Keeping the description of the concern in mind, test the brakes at different vehicle speeds using both light and heavy pedal pressure. To determine if the concern is in the front or rear braking system, use the brake pedal and then use the parking brake control. If the condition (pull, vibration, pulsation) occurs only with the parking brake, the concern is in the rear brake system.

If the concern becomes evident during this check, verify it fits the description given before the road test. If the concern is not evident, attempt to duplicate the condition using the information from the description.

If a concern exists, use the Symptom Chart in order to isolate it to a specific sub-system and condition description. From this description,

a list of possible sources can be used to further narrow the cause to a specific component or condition.

SYMPTOM CHART

SYMPTOM	POSSIBLE CAUSE	ACTION
Brakes noisy	▪ Brake pads ▪ Brake discs	GO to Pinpoint Test **A.**
Vibration when brakes are applied	▪ Wheels/tires out of balance ▪ Wheel hub nuts loose ▪ Brake caliper mounting bolts loose ▪ Brake pads ▪ Foreign material/scratches/corrosion on brake disc contact surfaces ▪ Excessive brake disc thickness variation ▪ Excessive brake disc runout ▪ Wheel bearing wear or failure ▪ Suspension bushing wear or failure ▪ Steering bushing wear or failure	GO to Pinpoint Test **B.**
The brakes pull or drift	▪ Tire pressures/wear ▪ Brake calipers ▪ Brake pads ▪ Brake discs ▪ Wheel alignment adjustment ▪ Wheel bearing ▪ Suspension bushings and ball joints	GO to Pinpoint Test **C.**

SYMPTOM	POSSIBLE CAUSE	ACTION
The pedal feels spongy	▪ Air in brake hydraulic system ▪ Leak in hydraulic system ▪ Brake booster/master cylinder ▪ Brake pads	GO to Pinpoint Test **D.**
The pedal goes down fast	▪ Air in brake hydraulic system ▪ Leak in hydraulic system ▪ Brake booster/master cylinder ▪ Brake pads	GO to Pinpoint Test **E.**
The pedal goes down slowly	▪ Air in brake hydraulic system ▪ Brake booster/master cylinder	GO to Pinpoint Test **F.**
Excessive brake pedal effort required	▪ Brake pads ▪ Brake booster	GO to Pinpoint Test **G.**
Brake lockup during light brake pedal force	▪ Brake pads ▪ Brake calipers	GO to Pinpoint Test **H.**
Brakes drag	▪ Parking brake control applied/malfunction ▪ Seized parking brake cables ▪ Seized brake caliper slide pins ▪ Seized brake caliper ▪ Brake booster ▪ Pedal gear	GO to Pinpoint Test **I.**
Excessive/Erratic brake pedal travel	▪ Hydraulic system ▪ Brake pads ▪ Brake discs ▪ Hub and bearing assembly	GO to Pinpoint Test **J.**
	▪ Fluid level	

SYMPTOM	POSSIBLE CAUSE	ACTION
The red brake warning indicator is always on	▪ Brake master cylinder fluid level sensor ▪ Parking brake control ▪ Electrical circuit	Fill the system to specification. Check for leaks. Install a new brake master cylinder fluid reservoir as required. Refer to the relevant section in the workshop manual for parking brake control and circuit tests.
Slow or incomplete brake pedal return	▪ Brake pedal binding ▪ Brake booster/master cylinder	GO to Pinpoint Test **K.**

PINPOINT TESTS

PINPOINT TEST A : BRAKES NOISY	
TEST CONDITIONS	DETAILS/RESULTS/ACTIONS
	A1: INSPECT BRAKE PADS
	1 Inspect the condition of the front and rear brake pads. Check for damage to any anti-squeal shims.
	Are the brake pads OK? **Yes** GO to A2. **No** Clean/install new front and rear brake pads as required. Re-test vehicle for brake noise.
	A2: INSPECT BRAKE DISCS
	1 Inspect the brake discs for excessive corrosion, wear or disc thickness variation.
	Does excessive corrosion, wear or disc thickness variation exist? **Yes** Install new front and rear brake discs and brake pads as required. Re-test vehicle for brake noise. **No** No action required, vehicle is OK.

PINPOINT TEST B : VIBRATION WHEN BRAKES ARE APPLIED	
TEST CONDITIONS	DETAILS/RESULTS/ACTIONS
	B1: ROAD TEST VEHICLE
	1 Road test the vehicle between 40-80 km/h (25-50 mph) without applying brakes.
	Is the vibration present? **Yes** Refer to the relevant section in the workshop manual for noise vibration and harshness tests. **No** GO to B2.
	B2: CHECK FOR BRAKE VIBRATION
	1 Road test the vehicle between 40-80 km/h (25-50 mph) with light and medium application on the brake pedal.
	Is a vibration present? **Yes** Check the brake caliper mounting bolts and wheel hub nuts and tighten to specification as required. Check the balance of all road wheels and tires and repair as required. Check the brake discs for excessive wear, runout, thickness variation or cracks. Install new brake discs and brake pads as required. GO to B3. **No** No action required, vehicle is OK.
	B3: IS VIBRATION STILL PRESENT UNDER BRAKE APPLICATION?
	1 Road test the vehicle between 40-80 km/h (25-50 mph) with light and medium application on the brake pedal.
	Is a vibration present? **Yes** Check for wear or failure of steering gear bushings. Check for wear or failure of steering gear ball joints. Check for wear or failure of front wheel bearings, suspension bushings and ball joints. Check for wear or failure of rear wheel bearings, suspension bushings and ball joints. Refer to relevant section in workshop manual and install new components as required. **No** No action required, vehicle is OK.

PINPOINT TEST C : THE BRAKES PULL OR DRIFT	
	DETAILS/RESULTS/ACTIONS

PINPOINT TEST C : THE BRAKES PULL OR DRIFT	
TEST CONDITIONS	
C1: ROAD TEST VEHICLE	
	1 Road test the vehicle and apply the brake pedal.
	Does the vehicle pull or drift? **Yes** GO to C2. **No** No action required, vehicle is OK.
C2: INSPECT TIRE CONDITION/PRESSURE	
	1 Check for excessive tire wear or incorrect pressures.
	Are the tires at the correct pressure and in good condition? **Yes** GO to C3. **No** Adjust the tire pressures or install new tires if excessively worn. Re-test the system for normal operation.
C3: CHECK CALIPERS	
	1 Check the disc brake caliper pistons and pins for binding, leaking or sticking.
	Do the disc brake caliper pistons and pins bind, leak or stick? **Yes** Rectify sticking pins and install new brake calipers as required. Re-test the system for normal operation. **No** GO to C4.
C4: INSPECT BRAKE DISCS	
	1 Check the brake discs for excessive damage, thickness variation or runout.
	Does excessive damage or runout exist? **Yes** Install new brake discs and brake pads as required. Re-test the system for normal operation. **No** GO to C5.
C5: INSPECT THE FRONT HUB AND WHEEL BEARING ASSEMBLY	
	1 Check the front hub and wheel bearing assembly.
	Are the wheel bearings OK?

PINPOINT TEST C : THE BRAKES PULL OR DRIFT	
	Yes GO to C6. **No** Install new wheel bearings as required. Re-test the system for normal operation.
C6: CHECK SUSPENSION BUSHINGS AND BALL JOINTS.	
	1 Check all suspension bushings and ball joints.
	Are the suspension bushings and ball joints OK? **Yes** GO to C7. **No** Install new front suspension bushings and ball joints as required. Install new rear suspension bushings and ball joints as required. Refer to the relevant section in the workshop manual.
C7: CHECK VEHICLE ALIGNMENT	
	1 Check the vehicle alignment.
	Is the alignment within specification? **Yes** No action is required, vehicle is OK. **No** Adjust the alignment as required.

PINPOINT TEST D : THE PEDAL FEELS SPONGY	
TEST CONDITIONS	DETAILS/RESULTS/ACTIONS
D1: CHECK FOR SPONGY PEDAL (ENGINE OFF)	
	1 Check for a firm brake pedal.
	Is the brake pedal effort and brake pedal travel normal? **Yes** No action is required, vehicle is OK. **No** GO to D2.
D2: CHECK BRAKE PEDAL RESERVE (ENGINE OFF)	
	1 Pump the brake pedal 10 times and hold on the final application.
	Does the brake pedal feel firm on final application? **Yes**

PINPOINT TEST D : THE PEDAL FEELS SPONGY	
	GO to D3. **No** Bleed the brake system.
D3: CHECK BRAKE PEDAL RESERVE (ENGINE ON)	
	1 With engine running at idle speed.
	2 Apply the brake pedal lightly three or four times.
	3 Wait 15 seconds for the vacuum to recover.
	4 Push down on the brake pedal until it stops moving downward or an increased resistance to the brake pedal travel occurs.
	5 Hold the brake pedal in the applied position while increasing the engine speed to 2000 revs/min.
	6 Release the accelerator pedal.
	Does the brake pedal move downward as the engine speed returns to idle? **Yes** GO to D4. **No** Check the vacuum to brake booster.
D4: CHECK BRAKE FLUID LEVEL	
	1 Check the brake master cylinder reservoir fluid level.
	Is the fluid level OK? **Yes** Bleed the brake system. Re-test the system for normal operation. **No** Check for leaking brake system and rectify as required. Add fluid and bleed the brake system. Re-test the system for normal operation.

PINPOINT TEST E : THE PEDAL GOES DOWN FAST	
TEST CONDITIONS	**DETAILS/RESULTS/ACTIONS**
E1: ROAD TEST VEHICLE	
	1 Road test the vehicle and apply the brake pedal.
	Is the brake pedal effort and brake pedal travel normal?

PINPOINT TEST E : THE PEDAL GOES DOWN FAST	
	Yes No action required, vehicle is OK. **No** GO to E2.
E2: CHECK BRAKE PEDAL TRAVEL-PRESSURIZE SYSTEM	
	1 Pump the brake pedal rapidly (five times).
	Does the brake pedal travel build up and then hold? **Yes** Bleed the brake system. Re-test the system for normal operation. **No** GO to E3.
E3: CHECK FOR BRAKE SYSTEM LEAKS	
	1 Check for external brake system leaks. For additional information, refer to brake master cylinder component test in this section.
	Is there a leak present? **Yes** Repair as necessary, add fluid and bleed brake system. Re-test the system for normal operation. **No** No action required, system is OK.

PINPOINT TEST F : THE PEDAL GOES DOWN SLOWLY	
TEST CONDITIONS	**DETAILS/RESULTS/ACTIONS**
F1: ROAD TEST VEHICLE - CHECK BRAKE PEDAL OPERATION	
	1 Check if the condition occurs during actual stopping application by applying the brake pedal while the vehicle is moving.
	Does the condition occur when the vehicle is moving? **Yes** GO to F2. **No** GO to F3.
F2: CHECK FOR BRAKE SYSTEM LEAKS	
	1 Check for external brake system leaks. For additional information, refer to brake master cylinder component test in this section.

PINPOINT TEST F : THE PEDAL GOES DOWN SLOWLY	
	Are there any external brake system leaks? **Yes** Rectify as necessary. Add fluid and bleed the brake system. Re-test the system for normal operation. **No** GO to F3.
F3: CARRY OUT A BRAKE MASTER CYLINDER BYPASS TEST	
	1 Test for brake master cylinder bypass condition. Refer to Brake master cylinder component test in this section.
	Has a concern been identified? **Yes** Install a new brake master cylinder, add fluid and bleed the brake system. Re-test the system for normal operation. **No** No action required, system is OK.

PINPOINT TEST G : EXCESSIVE BRAKE PEDAL EFFORT	
TEST CONDITIONS	**DETAILS/RESULTS/ACTIONS**
G1: CHECK BRAKE PADS	
	1 Check the brake pads for wear, contamination, correct installation, damage and type.
	Has a concern been identified? **Yes** Correctly install or install new brake pads as required. Re-test the system for normal operation. **No** GO to G2.
G2: CHECK VACUUM	
	1 Disconnect the vacuum hose from the brake booster.
	2 Connect a vacuum/pressure tester to the vacuum hose.
	3 Run the engine at normal operating temperature.
	4 Record the vacuum reading.
	Is the reading 40.5 kPa (12 in-Hg) or greater? **Yes** GO to G3. **No**

PINPOINT TEST G : EXCESSIVE BRAKE PEDAL EFFORT	
	Locate and rectify the source of low vacuum. Re-test the system for normal operation.
G3: INSPECT SYSTEM	
	1 Switch the engine off.
	2 Reconnect the vacuum hose.
	3 Inspect the brake booster, rubber grommet, and all vacuum plumbing for cracks, holes, damaged connections, or missing clamps.
	4 Pump the brake pedal several times to exhaust the vacuum. Push down on the brake pedal and hold.
	Does the brake pedal move down when the engine is started? **Yes** Vacuum system is OK. **No** GO to G4.
G4: CHECK POWER BRAKE BOOSTER VALVE	
	1 Check the brake booster valve. For additional information, refer to Brake Booster component test in this section.
	Is the power brake booster valve OK? **Yes** Check the brake booster. For additional information, refer to Brake Booster component test in this section. Install a new brake booster as required. Re-test the system for normal operation. **No** Install a new brake booster valve. Re-test the system for normal operation.

PINPOINT TEST H : BRAKE LOCKUP DURING LIGHT BRAKE PEDAL FORCE	
TEST CONDITIONS	DETAILS/RESULTS/ACTIONS
H1: TEST BRAKE LOCKUP	
	1 Road test the vehicle and apply the brake pedal lightly.
	Do the brakes lockup? **Yes** GO to H2.

PINPOINT TEST H : BRAKE LOCKUP DURING LIGHT BRAKE PEDAL FORCE	
	No No action required, vehicle is OK.
H2: INSPECT BRAKE PADS	
	1 Inspect brake pads for contamination, correct installation, damage and type.
	Has a concern been identified? **Yes** Correctly install or install new brake pads as required. Re-test the system for normal operation. **No** GO to H3.
H3: INSPECT BRAKE CALIPERS	
	1 Inspect brake calipers for binding, leaking or sticking.
	Has a concern been identified? **Yes** Correctly install or install new brake calipers as required. Re-test the system for normal operation. **No** No action required, vehicle is OK.

PINPOINT TEST I : BRAKES DRAG	
TEST CONDITIONS	DETAILS/RESULTS/ACTIONS
I1: ROAD TEST VEHICLE	
	1 Road test the vehicle and apply the brakes.
	Are the brakes functioning correctly? **Yes** No action required, vehicle is OK. **No** GO to I2.
I2: CHECK BRAKE CALIPERS	
	1 Check the front and rear calipers pistons and pins for binding, leaking or sticking.
	Do the disc brake caliper pistons and pins bind, leak or stick? **Yes**

PINPOINT TEST I : BRAKES DRAG	
	Inspect the brake calipers and parking brake cables. Install new components as required. Re-test the system for normal operation. **No** GO to I3.
I3: CHECK BRAKE BOOSTER	
	1 Check the brake booster connecting rod alignment and travel.
	Is the connecting rod OK? **Yes** Vehicle is OK. **No** Install a new brake booster as required. Re-test the system for normal operation.

PINPOINT TEST J : EXCESSIVE/ERRATIC BRAKE PEDAL TRAVEL	
TEST CONDITIONS	DETAILS/RESULTS/ACTIONS
J1: TEST ON ROUGH ROAD	
	1 Road test the vehicle on rough road conditions.
	2 Apply the brakes slowly.
	Is the brake pedal effort and brake pedal travel normal? **Yes** No action required, vehicle is OK. **No** GO to J2.
J2: CHECK BRAKE FLUID LEVEL	
	1 Check the brake master cylinder reservoir fluid level.
	Is the fluid level OK? **Yes** GO to J3. **No** Check brake master cylinder reservoir sealing points. For additional information, refer to Brake master cylinder component test in this section. Add brake fluid and bleed the brake system. Re-test the system for normal operation.
J3: CHECK BRAKE PEDAL RESERVE	
	1 Run engine at idle speed.

PINPOINT TEST J : EXCESSIVE/ERRATIC BRAKE PEDAL TRAVEL	
	2 Apply the brake pedal lightly three or four times.
	3 Wait 15 seconds for the vacuum to replenish.
	4 Push down on the brake pedal until it stops moving downward or an increased resistance to the brake pedal travel occurs.
	5 Hold the brake pedal in the applied position while increasing the engine speed to 2000 revs/min.
	6 Release the accelerator pedal.
	Does the brake pedal move downward as the engine speed returns to idle? **Yes** GO to J4. **No** Check the vacuum to the brake booster.
J4: CHECK THE FRONT WHEEL BEARING ASSEMBLY	
	1 Check the front wheel bearing assembly.
	Are the front wheel bearings loose/damaged? **Yes** Tighten to specification or install a new front wheel bearing as required. Re-test the system for normal operation. **No** Check the front brake discs for thickness variances.

PINPOINT TEST K : SLOW OR INCOMPLETE BRAKE PEDAL RETURN	
TEST CONDITIONS	**DETAILS/RESULTS/ACTIONS**
K1: CHECK FOR BRAKE PEDAL RETURN	
	1 Run the engine at idle while making several brake applications.
	2 Pull the brake pedal rearward with approximately 44.5 N (10lb) force.
	3 Release the brake pedal and measure the distance to the toe board.
	4 Make a hard brake application.
	5

PINPOINT TEST K : SLOW OR INCOMPLETE BRAKE PEDAL RETURN	
	Release the brake pedal and measure the brake pedal to toe board distance. The brake pedal should return to its original position.
	Does the brake pedal return to its original position? **Yes** No action required, vehicle is OK. **No** GO to K2.
K2: CHECK FOR BRAKE PEDAL BINDING	
	1 Disconnect the brake booster from the brake pedal. Check the brake pedal to ensure free operation.
	Is the brake pedal operating freely? **Yes** Install a new brake booster as required. Re-test the system for normal operation. **No** Repair or install new brake pedal. Re-test the system for normal operation.

COMPONENT TESTS

BRAKE BOOSTER

1. Check all hoses and connections. All unused vacuum connectors should be capped. Hoses and their connections should be correctly secured and in good condition with no holes and no collapsed areas. Inspect the valve on the brake booster for damage.

2. Check the hydraulic brake system for leaks or low fluid.

3. With the automatic transmission in PARK, stop the engine and apply the parking brake. Pump the brake pedal several times to exhaust all vacuum in the system. With the engine switched off and all vacuum in the system exhausted, apply the brake pedal and hold it down. Start the engine. If the vacuum system is operating, the brake pedal will tend to move downward under

constant foot pressure. If no motion is felt, the vacuum booster system is not functioning.

4. Remove the vacuum hose from the brake booster. Manifold vacuum should be available at the brake booster end of the hose with the engine at idle speed and the automatic transmission in PARK. Make sure that all unused vacuum outlets are correctly capped, hose connectors are correctly secured and vacuum hoses are in good condition. When it is established that manifold vacuum is available to the brake booster, connect the vacuum hose to the brake booster and repeat Step 3. If no downward movement of the brake pedal is felt, install a new brake booster.

5. Operate the engine for a minimum of 10 seconds at a fast idle. Stop the engine and allow the vehicle to stand for 10 minutes. Then, apply the brake pedal with approximately 89 N (20lb) of force. The pedal feel (brake application) should be the same as that noted with the engine running. If the brake pedal feels hard (no power assist), install a new valve and then repeat the test. If the brake pedal still feels hard, install a new brake booster. If the brake pedal movement feels spongy, bleed the brake system.

BRAKE MASTER CYLINDER

Usually, the first and strongest indicator of anything wrong in the brake system is a feeling through the brake pedal. In diagnosing the condition of the brake master cylinder, check pedal feel as evidence of a brake concern. Check for brake warning lamp illumination and the brake fluid level in the brake master cylinder reservoir.

Normal Conditions

The following conditions are considered normal and are not indications that the brake master cylinder is in need of repair.

- Modern brake systems are designed to produce a pedal effort that is not as hard as in the past. Complaints of light pedal efforts should be compared to the pedal efforts of another vehicle of the same model and year.
- The fluid level will fall with brake pad wear.

Abnormal Conditions

Changes in the brake pedal feel or brake pedal travel are indicators that something could be wrong in the brake system. The diagnostic procedure and techniques use brake pedal feel, warning indicator illumination and low brake fluid level as indicators to diagnosing brake system concerns. The following conditions are considered abnormal and indicate that the brake master cylinder is in need of repair:

NOTE:

Prior to carrying out any diagnosis, make sure the brake system warning indicator is functional.

- Brake pedal goes down fast. This could be caused by an external or internal leak.
- Brake pedal goes down slowly. This could be caused by an internal or external leak.
- Brake pedal is low or feels spongy. This condition may be caused by no fluid in the brake master cylinder, reservoir cap vent holes clogged or air in the hydraulic system.
- Brake pedal effort is excessive. This may be caused by a bind or obstruction in the pedal/linkage, a faulty non-return valve, booster or insufficient booster vacuum.

- Rear brakes lock up during light pedal force. This may be caused by damaged brake pads, a partially applied parking brake, a damaged ABS sensor or bearing failure.
- Brake pedal effort erratic. This condition could be caused by the brake booster or incorrectly installed brake pads.
- Brake warning indicator is on. This may be caused by low fluid level or float assembly damaged.

NON PRESSURE LEAKS

Any reduced fluid volume in the brake master cylinder reservoir may be caused by two types of none pressure external leaks.

Type 1: An external leak may occur at the brake master cylinder reservoir cap because of incorrect positioning of the gasket and cap. Reposition cap and gasket.

Type 2: An external leak may occur at the brake master cylinder reservoir mounting seals. Repair such a leak by installing new seals and make sure that the brake master cylinder reservoir retaining bolt is correctly installed.

BRAKE SYSTEM – GENERAL INFORMATION

COMPONENT BLEEDING – VEHICLES WITH: HIGH PERFORMANCE BRAKES

(G1225242)

GENERAL PROCEDURES

WARNING:

If any components upstream of the Hydraulic Control Unit (HCU), including the HCU itself are replaced, the brake system must be bled using Land Rover approved diagnostic equipment. This will ensure that all air is expelled from the new component(s).

CAUTION:

LH illustration shown, RH is similar.

NOTES:

- Bleeding of the complete brake system must be carried out using Land Rover approved diagnostic equipment. The following manual procedure covers bleeding the brake system for components down stream of the HCU, where only the primary or secondary brake circuits have been disturbed in isolation. Partial bleeding of the hydraulic system is only permissible if a brake tube or hose has been disconnected with only minimal loss of fluid.
- Some variation in the illustrations may occur, but the essential information is always correct.

1. **WARNING:**

   Make sure to support the vehicle with axle stands.

   Raise and support the vehicle.

2. Check that the brake fluid lines are secure and that there are no signs of a brake fluid leak. If a brake fluid leak is detected, investigate and rectify the cause of the leak before bleeding the brakes.

3. Conduct the bleed procedure with the engine running.

4.

WARNING:

Do not allow dirt or foreign liquids to enter the reservoir. Use only new brake fluid of the correct specification from airtight containers. Do not mix brands of brake fluid as they may not be compatible.

CAUTIONS:

- Brake fluid will damage paint finished surfaces. If spilled, immediately remove the fluid and clean the area with water.
- The brake fluid reservoir must remain full with new, clean brake fluid at all times during bleeding.

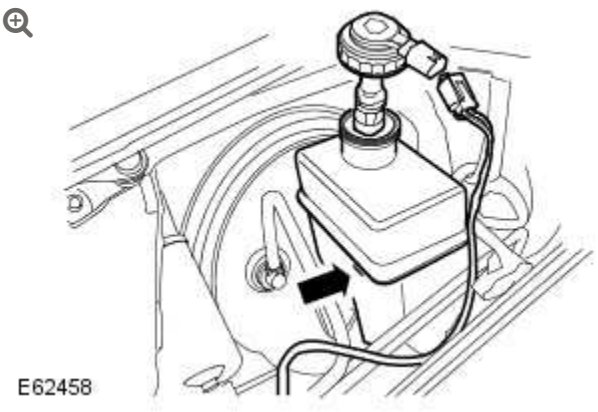

- Disconnect the brake fluid reservoir electrical connector.
- Remove the brake fluid reservoir cap.
- Fill the brake fluid reservoir to the MAX mark.

5.

Install the bleed tube to the brake caliper bleed screw and immerse the free end of the bleed tube in a bleed jar containing a small quantity of approved brake fluid.

- Hold the bleed container at least 300 mm above the Caliper that is being bled.

6. **WARNING:**

> High performance front brake calipers have two bleed points. The inner bleed point must be bled before the outer bleed point. Braking efficiency may be seriously impaired if an incorrect bleed sequence is used.

- If access is restricted to the front caliper outer bleed screws, rotate the road wheels to gain access.
- Loosen the bleed screw by one-half to three-quarters of a turn.

7. **CAUTION:**

> The brake fluid reservoir must remain full with new, clean brake fluid at all times during bleeding.

With assistance, depress the brake pedal steadily through to 2/3 of its full stroke.

8. With the brake pedal held down, close bleed screw and then return the brake pedal to 1/3 of its full stroke and hold.

9. Repeat steps 7 and 8, 28 times for the rear brake and 10 times for the front brake.

10. At the end of the bleed process, depress and hold the brake pedal down.

11. **CAUTION:**

> Make sure the bleed screw cap is installed after bleeding. This will prevent corrosion to the bleed screw.

With the brake pedal fully depressed, tighten the bleed screw.

- Tighten the front caliper bleed screws to 19 Nm (14 lb.ft).
- Tighten the rear caliper bleed screws to 10 Nm (7 lb.ft).

12. Fill the brake fluid reservoir to the MAX mark.

13. Apply the brakes and check for leaks.

14. Install the brake fluid reservoir cap.
    - Connect the brake fluid reservoir electrical connector.

15. On completion, road test the vehicle and check the brake pedal operation. The pedal travel should be short with a firm feel.

COMPONENT BLEEDING – VEHICLES WITH: STANDARD BRAKES (G1225243)

GENERAL PROCEDURES

WARNING:

If any components upstream of the Hydraulic Control Unit (HCU), including the HCU itself are replaced, the brake system must be bled using Land Rover approved diagnostic equipment. This will ensure that all air is expelled from the new component(s).

CAUTION:

LH illustration shown, RH is similar.

NOTES:

- Bleeding of the complete brake system must be carried out using Land Rover approved diagnostic equipment. The following manual procedure covers bleeding the brake system for components down stream of the HCU, where only the primary or secondary brake circuits have been disturbed in isolation. Partial bleeding of the hydraulic system is only permissible if a brake tube or hose has been disconnected with only minimal loss of fluid.
- Some variation in the illustrations may occur, but the essential information is always correct.

1. **WARNING:**

   Make sure to support the vehicle with axle stands.

   Raise and support the vehicle.

2. Check that the brake fluid lines are secure and that there are no signs of a brake fluid leak. If a brake fluid leak is detected, investigate and rectify the cause of the leak before bleeding the brakes.

3. Pump the brake pedal until the brake vacuum assistance is exhausted.

4.

WARNING:

Do not allow dirt or foreign liquids to enter the reservoir. Use only new brake fluid of the correct specification from airtight containers. Do not mix brands of brake fluid as they may not be compatible.

CAUTIONS:

- Brake fluid will damage paint finished surfaces. If spilled, immediately remove the fluid and clean the area with water.
- The brake fluid reservoir must remain full with new, clean brake fluid at all times during bleeding.

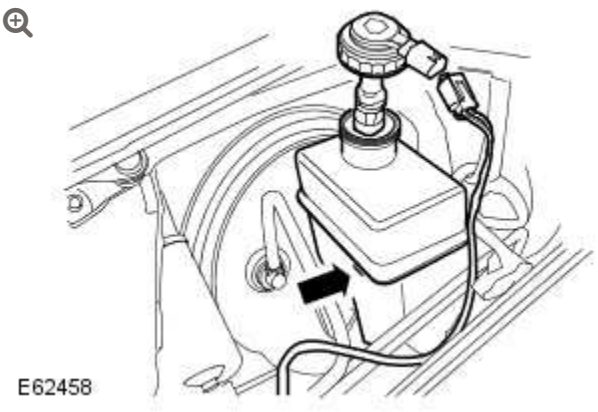

Remove the brake fluid reservoir cap.

- Disconnect the brake fluid reservoir electrical connector.
- Fill the brake fluid reservoir to the MAX mark.

5. Install the bleed tube to the brake caliper bleed screw and immerse the free end of the bleed tube in a bleed jar containing a small quantity of approved brake fluid.

- Hold the bleed container at least 300 mm above the Caliper that is being bled.

6. Loosen the bleed screw by one-half turn to three-quarters of a turn.

7. **CAUTION:**

   The brake fluid reservoir must remain full with new, clean brake fluid at all times during bleeding.

   With assistance, depress the brake pedal steadily through to 2/3 of its full stroke.

8. With the brake pedal held down, close bleed screw and then return the brake pedal to 1/3 of its full stroke and hold.

9. Repeat steps 7 and 8, 28 times for the rear brake and 10 times for the front brake.

10. At the end of the bleed process, depress and hold the brake pedal down.

11. **CAUTION:**

    Make sure the bleed screw cap is installed after bleeding. This will prevent corrosion to the bleed screw.

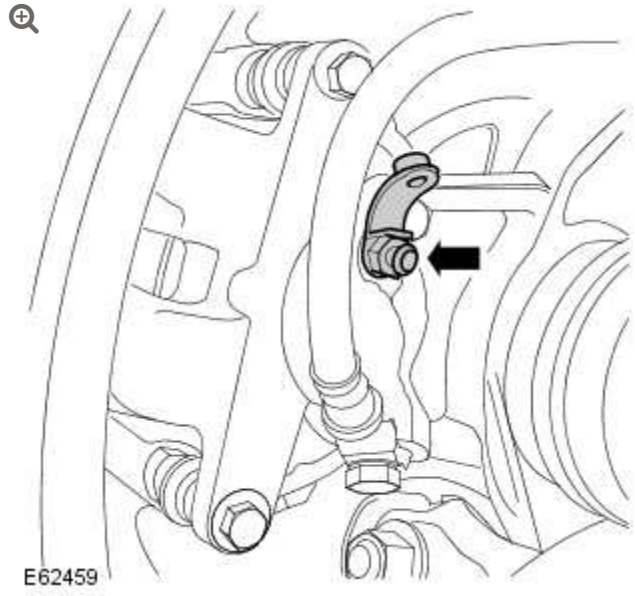

With the brake pedal fully depressed, tighten the bleed screw.

- On vehicles with high performance brakes, tighten the front caliper bleed screw to 19 Nm (14 lb.ft).
- On vehicles with standard brakes, tighten the front caliper bleed screw to 10 Nm (7 lb.ft).
- Tighten the rear caliper bleed screws to 10 Nm (7 lb.ft).

12. Fill the brake fluid reservoir to the MAX mark.

13. Apply the brakes and check for leaks.

14. Install the brake fluid reservoir cap.
    - Connect the brake fluid reservoir electrical connector.

15. On completion, road test the vehicle and check the brake pedal operation. The pedal travel should be short with a firm feel.

BRAKE SYSTEM – GENERAL INFORMATION

FRONT BRAKE DISC RUNOUT CHECK – VEHICLES WITH: HIGH PERFORMANCE BRAKES

(G1225401)

GENERAL PROCEDURES

70.12.15.01	DISC – FRONT – LEFT/EACH – CHECK RUN OUT AND THICKNESS – WITH WHEEL REMOVED	ALL DERIVATIVES	0.4	USED WITHINS

NOTES:

- Some variation in the illustrations may occur, but the essential information is always correct.
- LH illustration shown, RH is similar.

1.

WARNING:

Make sure to support the vehicle with axle stands.

Raise the front of the vehicle.

2. Remove the road wheel.

3. **CAUTION:**

Do not allow the brake caliper to hang on the brake hose.

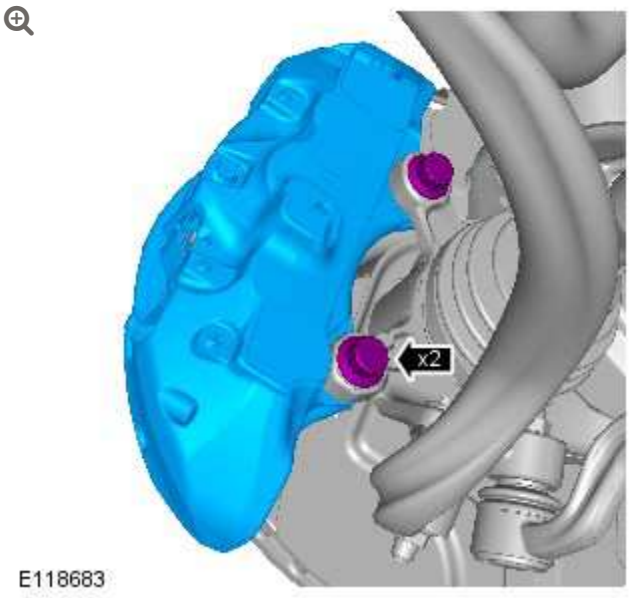

Release the brake caliper and tie aside.

4.

CAUTION:

Brake discs must be renewed in pairs, unless one disc requires changing before 1000 miles (1600 kilometers) from new.

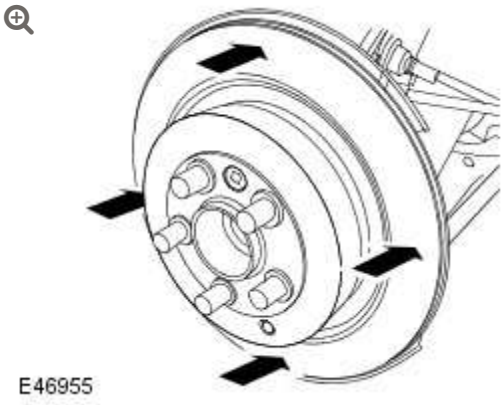

At 4 points around disc, measure disc thickness using a micrometer; renew disc if less than service limit or if variation is exceeded: Disc thickness, NEW 34 mm, Service limit 31 mm. Thickness variation maximum = 0.01 mm

5.

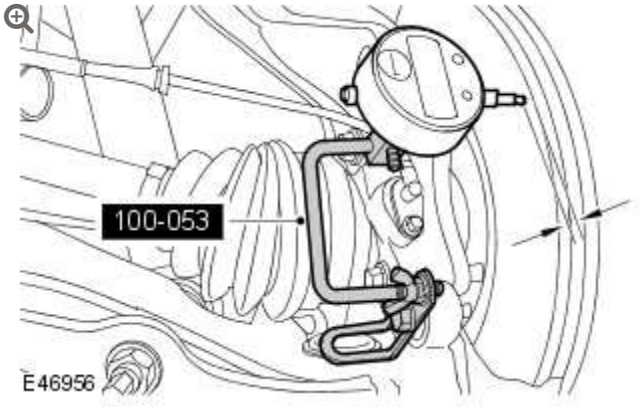

Mount a Dial Test Indicator (DTI) to and secure to inboard side of hub using caliper assembly upper bolt hole

6. Position DTI probe 5 mm in from outer edge of disc.

7. 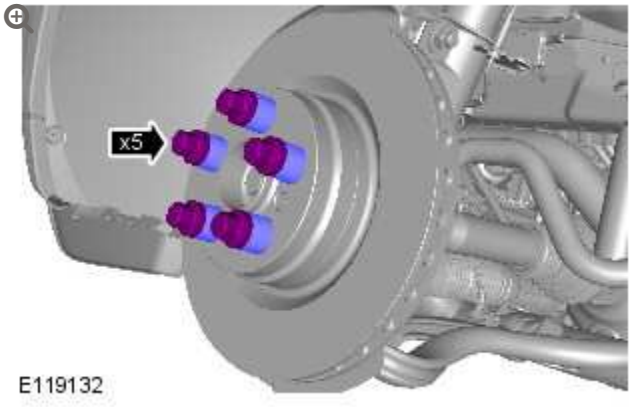

   Install spacer washers under the wheel nuts.

   - Tighten the road wheel nuts to 140 Nm (103 lb.ft).

8. Zero DTI and rotate road wheel one complete revolution to measure disc runout. Disc runout must not exceed 0.05 mm (0.002 in).

9. If disc runout is outside limits:

10. Remove the wheel hub nuts.

    - Remove the spacers.

11. Remove Allen screw securing brake disc to drive flange.

12. Remove the brake disc.

13. Ensure mating surfaces of disc and drive flange are clean.

14. Fit disc to flange, fit Allen screw and tighten to 16 Nm (12 lbf.ft.).

15. Install spacer washers under the wheel nuts.

    - Tighten the road wheel nuts to 140 Nm (103 lb.ft).

16. Check disc runout as detailed above.

17. If runout is still outside limits, renew disc and/or hub.

18. Remove the wheel hub nuts.
    - Remove the spacers.

19. Remove the DTI.

20. Install the brake caliper and tighten the bolts to 275 Nm (203 lb.ft)

21. Install the road wheel(s) and tighten nuts to 140Nm (103 lb-ft).

22. Depress brake pedal several times to set brake pads.

23. Lower the vehicle.

BRAKE SYSTEM – GENERAL INFORMATION

FRONT BRAKE DISC RUNOUT CHECK – VEHICLES WITHOUT: HIGH PERFORMANCE BRAKES

(G1224854)

GENERAL PROCEDURES

70.12.15.01	DISC – FRONT – LEFT/EACH – CHECK RUN OUT AND THICKNESS – WITH WHEEL REMOVED	ALL DERIVATIVES	0.4	USED WITHINS

NOTES:

- Some variation in the illustrations may occur, but the essential information is always correct.
- LH illustration shown, RH is similar.

1.

WARNING:

Make sure to support the vehicle with axle stands.

Raise the front of the vehicle.

2. Remove the road wheel.

3. **CAUTION:**

Do not allow the brake caliper to hang on the brake hose.

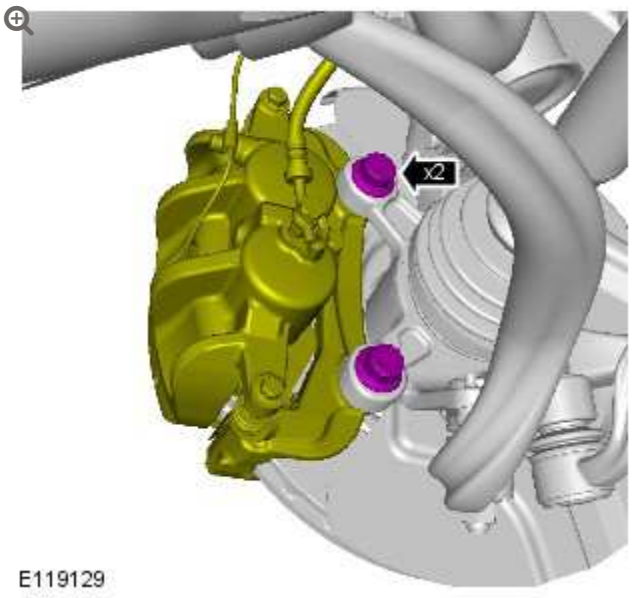

Release the brake caliper and tie aside.

4.

CAUTION:

Brake discs must be renewed in pairs, unless one disc requires changing before 1000 miles (1600 kilometers) from new.

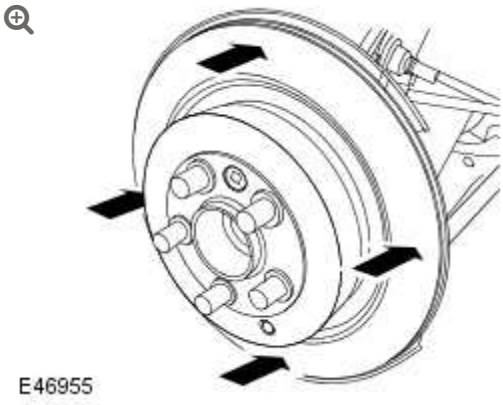

At 4 points around disc, measure disc thisckness using a micrometer; renew disc if less than service limit or if variation is exceeded: Disc thickness, NEW 30 mm, Service limit = 27 mm. Thickness variation maximum = 0.01.

5.

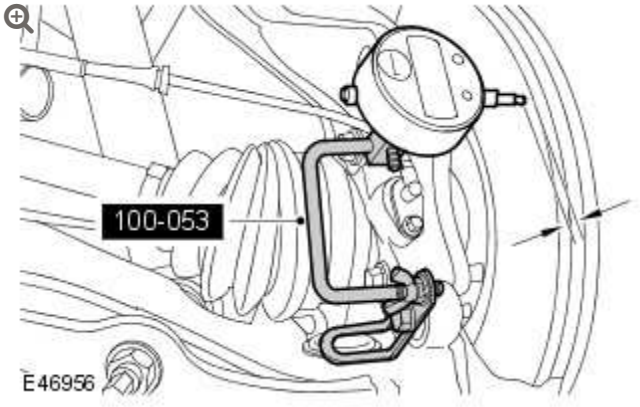

Mount a Dial Test Indicator (DTI) to and secure to inboard side of hub using caliper assembly upper bolt hole

6. Position DTI probe 5 mm in from outer edge of disc.

7. 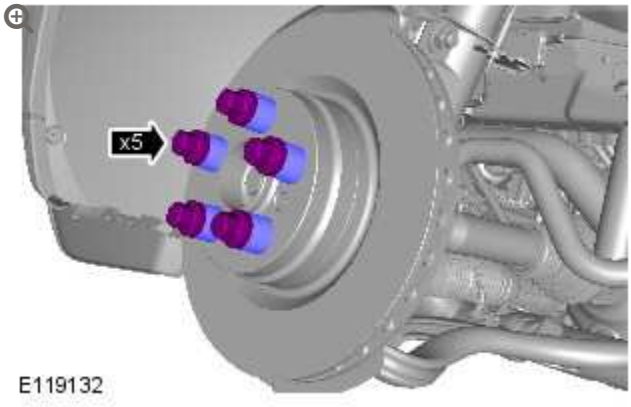

   Install spacer washers under the wheel nuts.

   - Tighten the road wheel nuts to 140 Nm (103 lb.ft).

8. Zero DTI and rotate road wheel one complete revolution to measure disc runout. Disc runout must not exceed 0.05 mm (0.002 in).

9. If disc runout is outside limits:

10. Remove the wheel hub nuts.

    - Remove the spacers.

11. Remove Allen screw securing brake disc to drive flange.

12. Remove the brake disc.

13. Ensure mating surfaces of disc and drive flange are clean.

14. Fit disc to flange, fit Allen screw and tighten to 16 Nm (12 lbf.ft.).

15. Install spacer washers under the wheel nuts.

    - Tighten the road wheel nuts to 140 Nm (103 lb.ft).

16. Check disc runout as detailed above.

17. If runout is still outside limits, renew disc and/or hub.

18. Remove the wheel hub nuts.
    - Remove the spacers.

19. Remove the DTI.

20. Install the brake caliper and tighten the bolts. TORQUE: 275 Nm

21. Install the road wheel(s) and tighten nuts to 140Nm (103 lb-ft).

22. Depress brake pedal several times to set brake pads.

23. Lower the vehicle.

BRAKE SYSTEM - GENERAL INFORMATION

REAR BRAKE DISC RUNOUT CHECK (G1224855)

GENERAL PROCEDURES

NOTES:

- Some variation in the illustrations may occur, but the essential information is always correct.
- RH illustration shown, LH is similar.
- It is not necessary to carry out the parking brake shoe 'bedding-in procedure' if the rear brake discs or parking brake shoes have been removed for access to other components.

1.

CAUTION:

Do not turn the ignition on when the parking brake service mode has been set, this will result in the parking brake being released from the service mode.

Enter the parking brake into the service mode.

- Turn the ignition on.

- Apply, and hold, the footbrake.
- Apply, and hold, the parking brake switch to the RELEASE position.
- Turn the ignition off.
- Release the footbrake.
- Release the parking brake switch.

2. **WARNING:**

> Make sure to support the vehicle with axle stands.

Raise rear of vehicle.

3. Remove road wheel.

4. **CAUTION:**

> The brake pad wear indicator sensor is easily damaged. Do not use a lever to remove the sensor. Use fingers only.

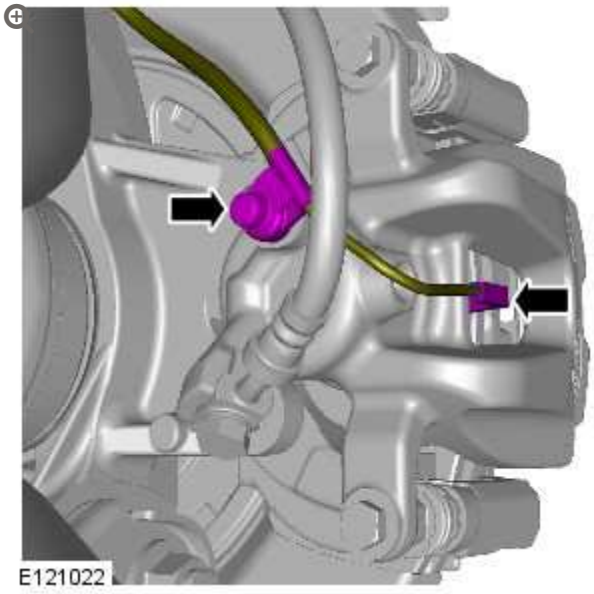

RH side rear only: Disconnect the brake pad wear indicator sensor lead.

5.

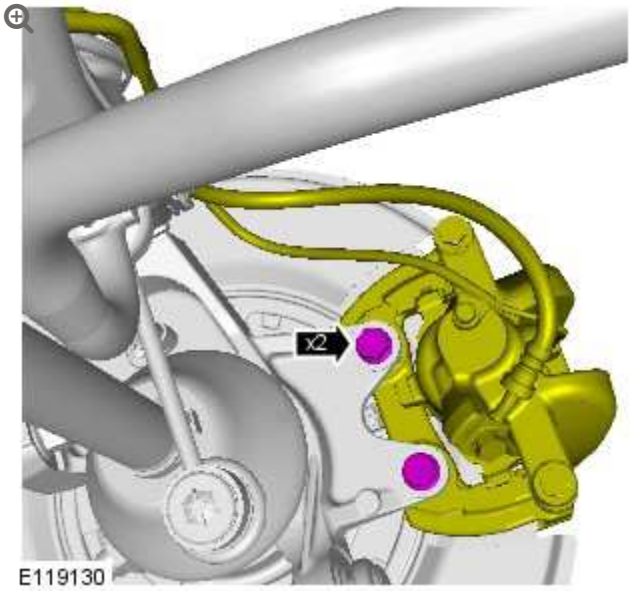

Remove 2 bolts securing brake caliper to hub. Release caliper from hub and tie aside.

6.

NOTE:

Some variation in the illustrations may occur, but the essential information is always correct.

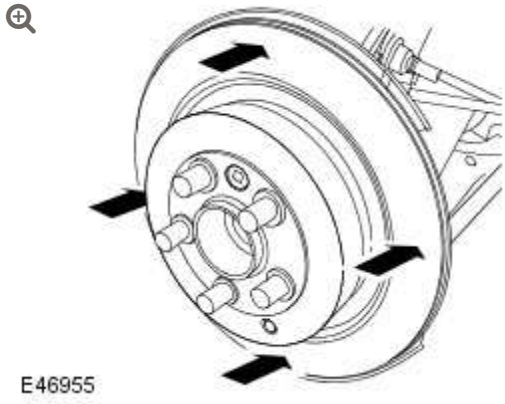

At 4 points around the disc, measure disc thickness using a micrometer; renew disc if less than service limit or if variation is exceeded: Disc thickness, NEW = 20 mm Service limit = 18 mm. Thickness variation maximum = 0.01 mm.

7.

NOTE:

Some variation in the illustrations may occur, but the essential information is always correct.

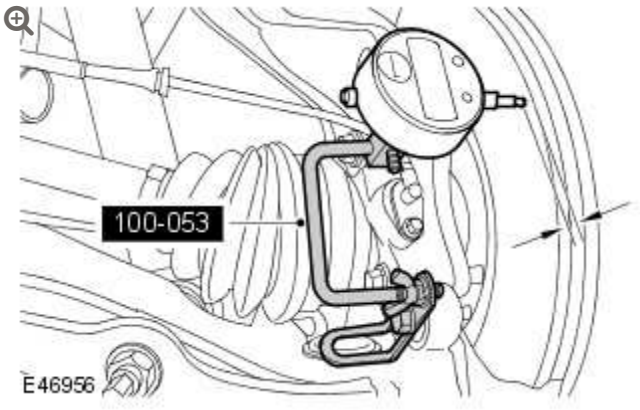

Mount a Dial Test Indicator (DTI) to and secure to inboard side of hub using caliper assembly upper bolt hole.

8. Position DTI probe 5 mm in from outer edge of disc.

9. **NOTE:**

> Some variation in the illustrations may occur, but the essential information is always correct.

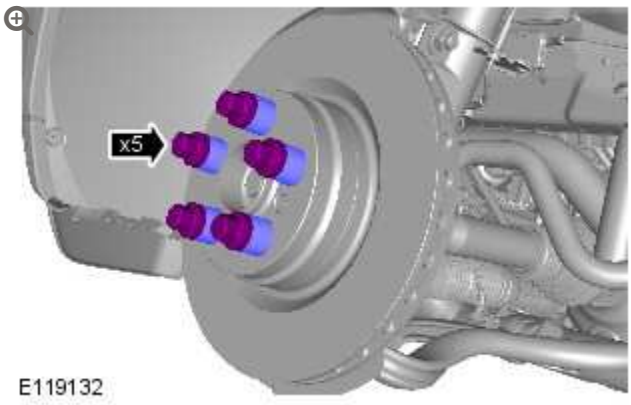

Tighten the wheel nuts to 140 Nm (103 lb.ft).

- Install spacer washers under the wheel nuts.

10.

Zero DTI and rotate wheel one complete revolution to measure disc runout. Disc runout must not exceed 0.09 mm (0.003 in).

11. If disc runout is outside limits:

12. Remove the wheel hub nuts.
    - Remove the spacer washers.

13. Remove Allen screw securing brake disc to drive flange.

14. Remove brake disc.

15. Ensure mating surfaces of disc and drive flange are clean.

16. Fit disc to flange, fit Allen screw and tighten to 16 Nm (12 lbf.ft).

17. Tighten the wheel nuts to 140 Nm (103 lb.ft).
    - Install spacer washers under the wheel nuts.

18. Check disc runout as detailed above.

19. If runout is still outside limits, renew disc and/or hub.

20. Remove the wheel hub nuts.
    - Remove the spacer washers.

21. Remove the DTI.

22.

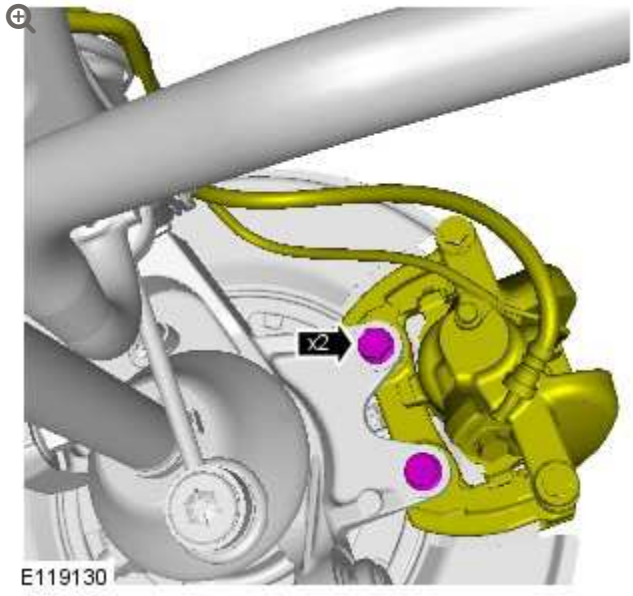

Install the brake caliper anchor bolts

- Tighten the bolts to 115 Nm (85 lb.ft).

23. Tighten the wheel nuts to 140 Nm (103 lb.ft).

24. Depress brake pedal several times to set brake pads.

25. Remove stands and lower vehicle.

FRONT DISC BRAKE

SPECIFICATIONS

Item	Specification
Disc type	Ventilated
Disc diameter:	
Vehicles without High performance brakes	360 mm (14.2 in)
Vehicles with High performance brakes	380 mm (15.0 in)
Disc thickness:	
Vehicles without High performance brakes:	
New	30.0 mm (1.18 in)
Service limit	27.0 mm (1.063 in)
Maximum disc run-out - disc installed	0.05 mm (0.002 in)
Vehicles with High performance brakes:	
New	34.0 mm (1.34 in)
Service limit	31.0 mm (1.22 in)
Maximum disc run-out - disc installed	0.05 mm (0.002 in)
Vehicles without High performance brakes:	
Caliper type	Sliding pin, twin piston
Piston diameter	48.0 mm (1.9 in)
Pad minimum thickness	3.0 mm (0.12 in)

Vehicles with High performance brakes:	
Caliper type	Fixed, six piston
Piston diameter	40/38/36 mm (1.57/1.50/1.42 in)
Pad minimum thickness	3.0 mm (0.12 in)
Brake pad wear warning lead:	
Location	Front left hand brake pad
Activates at	75% of pad life utilised

Torque Specifications Vehicles without High performance Brakes

DESCRIPTION	NM	LB-FT
Brake caliper bleed screw	10	7
Brake disc retaining bolt	16	12
Brake caliper anchor plate to hub bolts:	275	202
Brake caliper housing to anchor plate bolts	35	26
Brake hose union	32	24

Torque Specifications Vehicles with High performance Brakes

DESCRIPTION	NM	LB-FT
Brake caliper bleed screw	19	14
Brake disc retaining bolt	16	12
Brake caliper retaining bolts:	275	202
Brake hose union	32	24
Brake pad centre bolt	30	22

2012.0 RANGE ROVER (LM), 206-03

FRONT DISC BRAKE

DESCRIPTION AND OPERATION

COMPONENT LOCATIONS - Standard Brakes

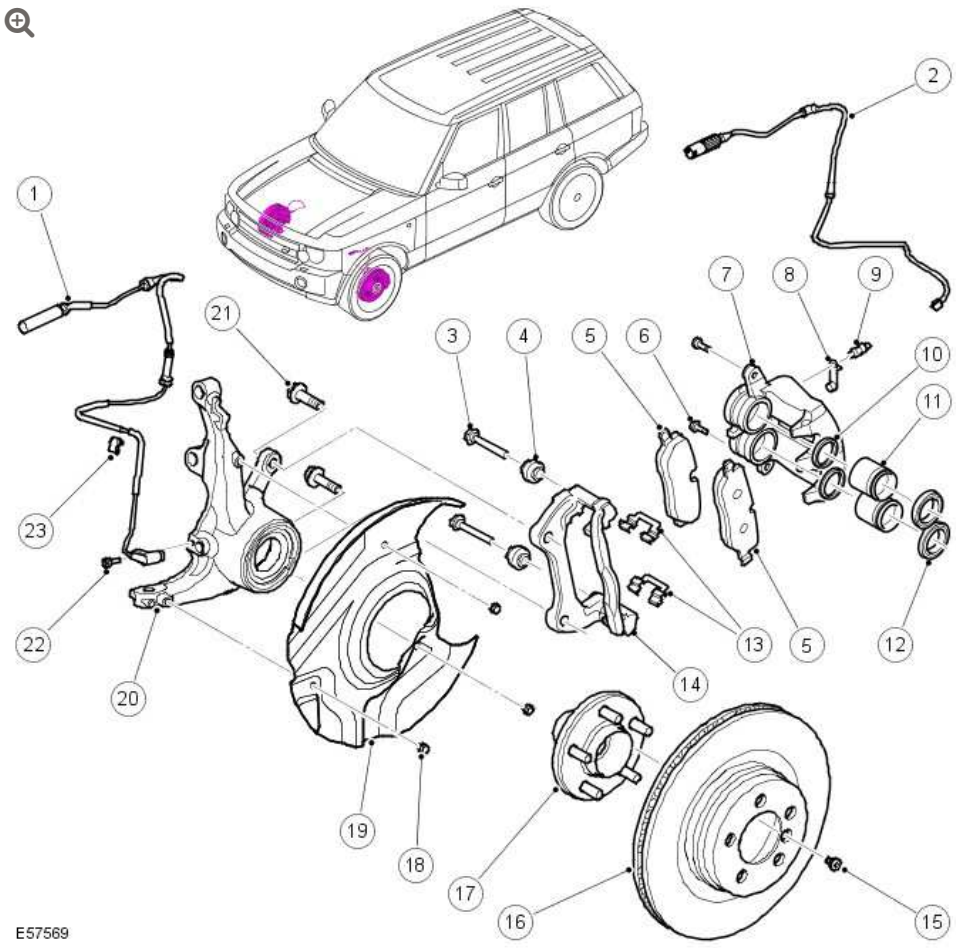

ITEM	DESCRIPTION
1	Wheel speed sensor
2	Brake pad wear sensor lead
3	Guide pin (2 off)

ITEM	DESCRIPTION
4	Guide pin dust cover (2 off)
5	Brake pad
6	Guide pin bolt (2 off)
7	Caliper body
8	Bleed screw dust cap
9	Bleed screw
10	Piston seal (2 off)
11	Piston (2 off)
12	Piston dust cover (2 off)
13	Brake pad retainers
14	Caliper carrier
15	Brake disc holding screw
16	Brake disc
17	Drive flange assembly
18	Dust shield screw (3 off)
19	Dust shield
20	Front wheel knuckle
21	Caliper bolt (2 off)
22	Wheel speed sensor cap screw
23	Cable clip

COMPONENT LOCATION - High Performance Brakes

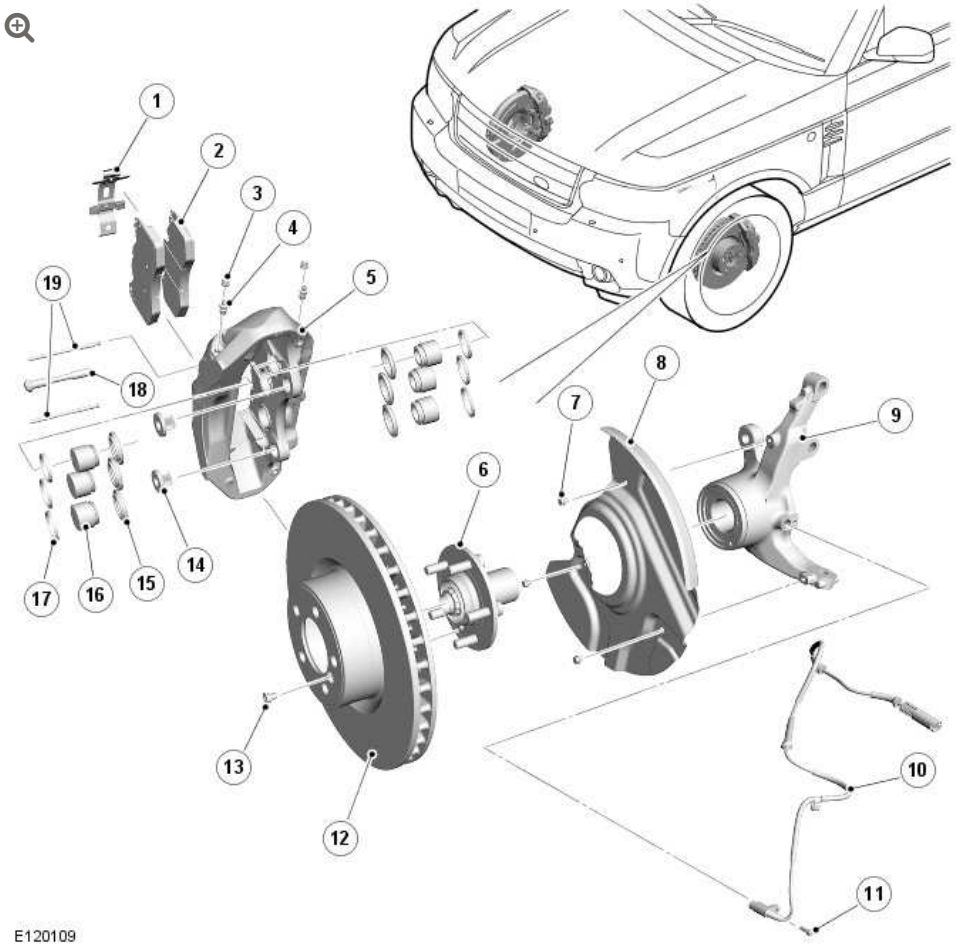

-

ITEM	DESCRIPTION
1	Brake pad anti-rattle spring
2	Brake pad
3	Bleed screw dust caps (x 2)
4	Bleed screw (x 2)
5	Caliper body
6	Drive flange assembly
7	Dust shield screw (x 3)
8	Dust shield
9	Front wheel knuckle
10	Wheel speed sensor
11	Wheel speed sensor screw

ITEM	DESCRIPTION
12	Brake disc
13	Brake disc retaining bolt
14	Caliper thread insert (x 2)
15	Piston dust cover (x 6)
16	Piston (x 6)
17	Piston seal (x 4)
18	Caliper bridge bolt
19	Brake pad retaining pins (x 2)

GENERAL

The front brakes on all models feature ventilated brake discs with different diameter brake discs dependant on the vehicle variant. For additional information, refer to: Specifications (206-03, Specifications).

The standard-brakes feature twin-piston sliding calipers and the high-performance brakes feature 6 piston fixed calipers.

On all models the brake caliper is attached to the rear of the front knuckle. The brake pads are made from an asbestos free material. The inboard brake pad of the left front brake incorporates a wear sensor.

With the standard brake sliding calipers, when hydraulic pressure is supplied to the caliper, the pistons extend and force the inner pad against the brake disc. The caliper body reacts and slides on the guide pins to bring the outer pad into contact with the brake disc.

With the high performance fixed calipers, when hydraulic pressure is supplied to the caliper, the three pairs of opposed pistons extend in

the caliper. The three pistons in each side of the caliper force their related brake pads against the brake disc.

The front brake pad wear sensor is connected in series with the rear brake pad wear sensor, between the instrument cluster and ground. When a brake pad incorporating a brake pad wear sensor is approximately 75% worn, the brake pad wear sensor goes open circuit. When the instrument cluster detects the open circuit, it illuminates the brake warning indicator, displays an appropriate warning in the message center and sounds a warning chime.
For additional information, refer to: Instrument Cluster (413-01, Description and Operation).

At the beginning of each ignition cycle, the instrument cluster performs a bulb check on the brake warning indicator.

2012.0 RANGE ROVER (LM), 206-03

FRONT DISC BRAKE

DIAGNOSIS AND TESTING

For additional information.

REFER to: Brake System (206-00, Diagnosis and Testing).

FRONT DISC BRAKE

BRAKE CALIPER – VEHICLES WITH: HIGH PERFORMANCE BRAKES

(G1224072)

REMOVAL AND INSTALLATION

70.55.02	BRAKE CALIPER - FRONT - EACH - RENEW	ALL DERIVATIVES	0.5	USED WITHINS	+
70.55.24	HOUSING ASSEMBLY - BRAKE CALIPER - FRONT - EACH - RENEW	ALL DERIVATIVES	0.5	USED WITHINS	+
70.55.25	HOUSING ASSEMBLY - BRAKE CALIPER - REAR - EACH - RENEW	ALL DERIVATIVES	0.5	USED WITHINS	+

REMOVAL

CAUTION:

LH illustration shown, RH is similar.

NOTES:

- Removal steps in this procedure may contain installation details.
- Some variation in the illustrations may occur, but the essential information is always correct.

1. **WARNING:**

   Make sure to support the vehicle with axle stands.

   Raise and support the vehicle.

2. Remove the wheel and tire.

3. **CAUTION:**

   The brake pad wear indicator sensor, which is installed on the left hand side only, is easily damaged. Do not use a lever to remove the sensor.

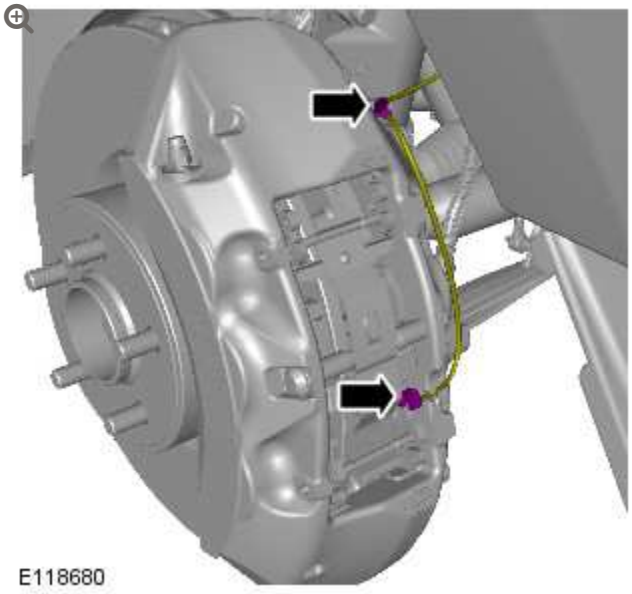

4.

WARNING:

Be prepared to collect escaping fluid.

CAUTIONS:

- Before disconnecting or removing components, ensure the area around the joint faces and connections are clean. Plug open connections to prevent contamination.
- Make sure that new sealing washers are installed.

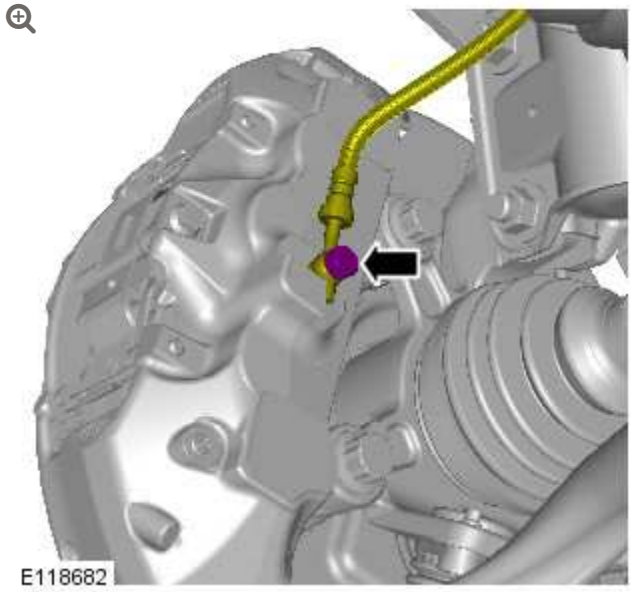

TORQUE: 32 Nm

5. For additional information, refer to: Brake Pads - Vehicles With: High Performance Brakes (206-03, Removal and Installation).

6. 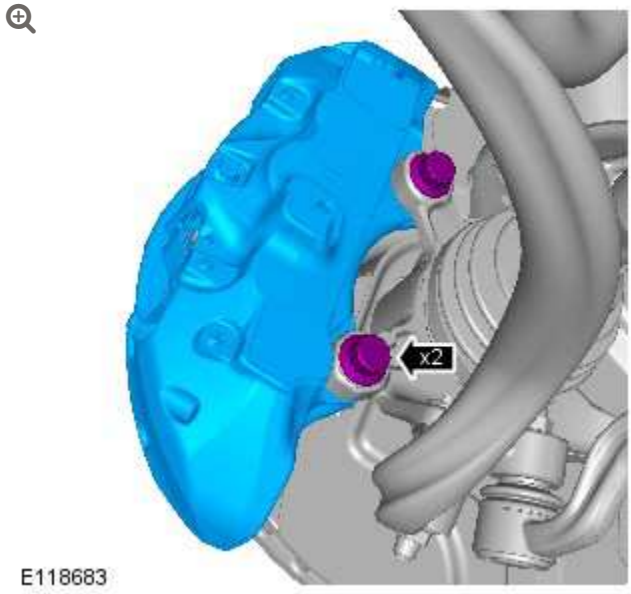

TORQUE: 275 Nm

INSTALLATION

1. To install, reverse the removal procedure.

2. Bleed the brake system.
   For additional information, refer to: Component Bleeding - Vehicles With: High Performance Brakes (206-00, General Procedures).

FRONT DISC BRAKE

BRAKE CALIPER – VEHICLES WITH: STANDARD BRAKES (G1224078)

REMOVAL AND INSTALLATION

70.55.02	BRAKE CALIPER - FRONT - EACH - RENEW	ALL DERIVATIVES	0.5	USED WITHINS	+
70.55.24	HOUSING ASSEMBLY - BRAKE CALIPER - FRONT - EACH - RENEW	ALL DERIVATIVES	0.5	USED WITHINS	+
70.55.25	HOUSING ASSEMBLY - BRAKE CALIPER - REAR - EACH - RENEW	ALL DERIVATIVES	0.5	USED WITHINS	+

REMOVAL

CAUTION:

LH illustration shown, RH is similar.

NOTE:

Removal steps in this procedure may contain installation details.

1. **WARNING:**

   Make sure to support the vehicle with axle stands.

   Raise and support the vehicle.

2. Remove the wheel and tire.

3. **CAUTION:**

   The brake pad wear indicator sensor is easily damaged. Do not use a lever to remove the sensor. Use fingers only.

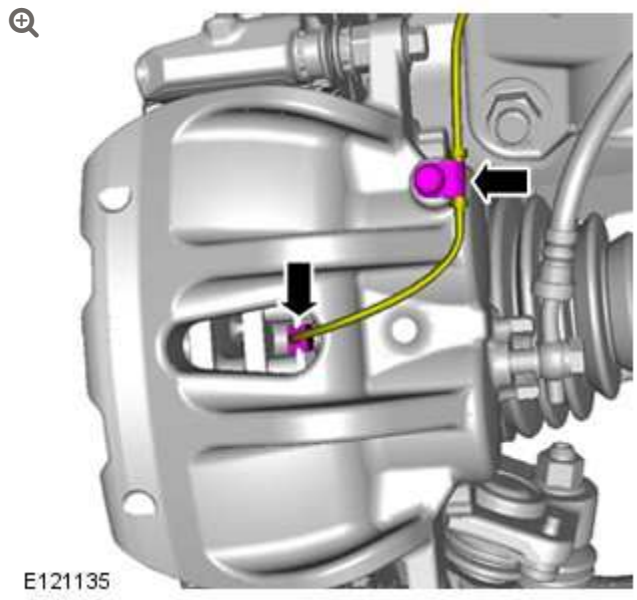

LH side only: Disconnect the brake pad wear indicator sensor.

4.

NOTE:

Use an additional wrench to prevent the component from rotating.

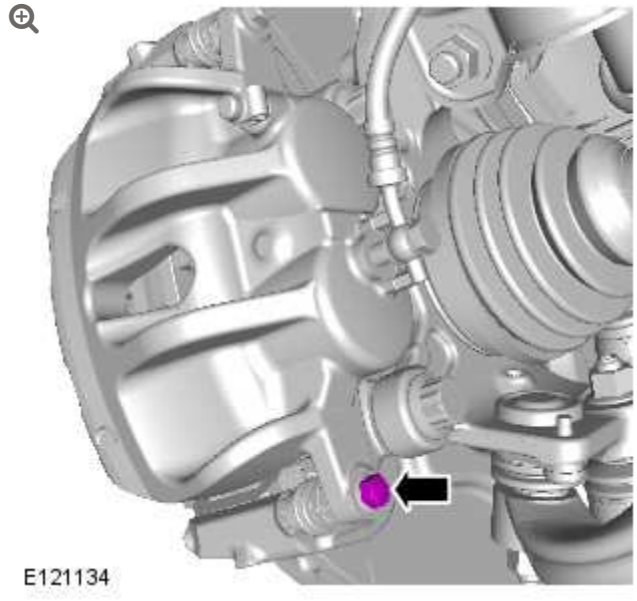

Remove the brake caliper lower bolt.

5.

WARNING:

Be prepared to collect escaping fluid.

CAUTION:

Before disconnecting or removing components, ensure the area around the joint faces and connections are clean. Plug open connections to prevent contamination.

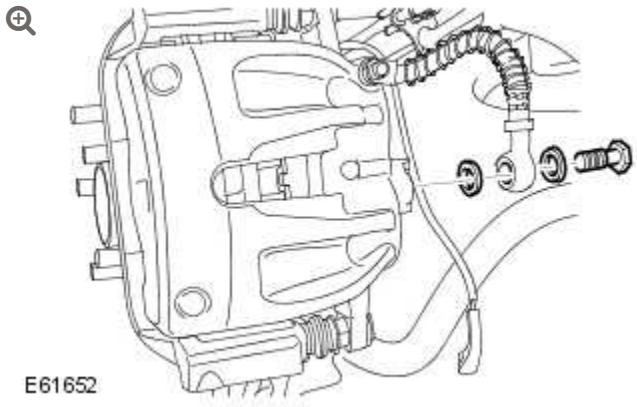

Disconnect the brake hose from the brake caliper.

- Remove the union.
- Remove and discard the two sealing washers.
- Install blanking caps to the exposed ports.

6.

NOTE:

Note the orientation of the brake pads.

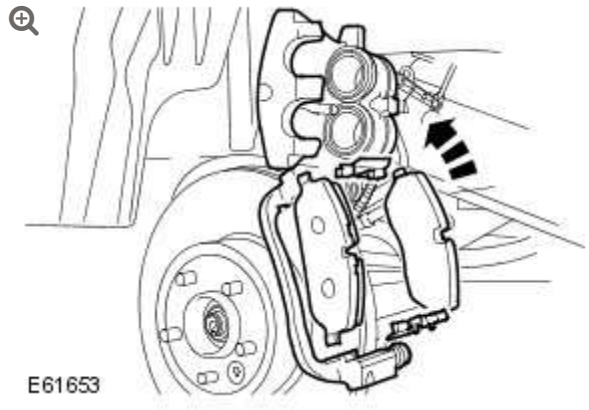

Remove the brake pads.

- Rotate the brake caliper upwards.
- Remove the two clips.

7.

NOTE:

Use an additional wrench to prevent the component from rotating.

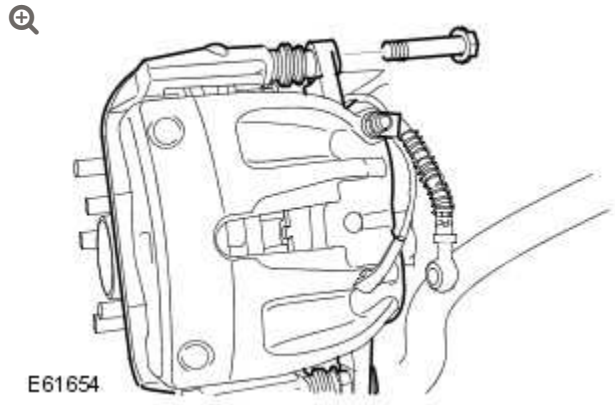

Remove the brake caliper housing.

- Remove the brake caliper upper bolt.
- Remove the brake caliper housing.

INSTALLATION

1. **WARNING:**

   Do not use compressed air to clean brake components. Dust from friction materials can be harmful if inhaled.

   Clean the brake caliper housing and anchor plate using brake cleaning fluid.

2. **CAUTIONS:**

   - The brake caliper should move freely on both slide pins.
   - If necessary, renew the components.

   Check for correct operation.

   - Check the caliper slide pins.
   - Check the condition of the caliper slide pin seals.

3. **NOTE:**

   Use an additional wrench to prevent the component from rotating.

   Install the brake caliper.

   - Tighten the brake caliper upper bolt to 35 Nm (26 lb.ft).

4. **NOTE:**

   Make sure the brake pads are installed in the correct orientation.

   Install the brake pads.

   - Install the two clips.
   - Apply a suitable amount of the supplied grease to the mating faces of the brake pads and brake calipers.

5. **NOTE:**

   Use an additional wrench to prevent the component from rotating.

   Rotate the brake caliper downwards.

   - Tighten the brake caliper lower bolt to 35 Nm (26 lb.ft).

6. Connect the brake hose to the brake caliper.
   - Clean the component mating faces.
   - Remove the blanking caps from the ports.
   - Install new sealing washers.
   - Tighten the brake hose union to 32 Nm (24 lb.ft).

7. LH side only: Connect the brake pad wear indicator sensor.
   - Secure in the clip.

8.

Bleed the brake caliper.

For additional information, refer to: Component Bleeding - Vehicles With: Standard Brakes (206-00, General Procedures).

9. Install the wheel and tire.
   - Tighten the wheel nuts to 140 Nm (103 lb.ft).

FRONT DISC BRAKE

BRAKE DISC – VEHICLES WITH: HIGH PERFORMANCE BRAKES

(G1224070)

REMOVAL AND INSTALLATION

70.12.10	DISC - FRONT - EACH - RENEW	ALL DERIVATIVES	0.5	USED WITHINS	+
70.12.33	DISC - REAR - EACH - RENEW	ALL DERIVATIVES	0.9	USED WITHINS	+

REMOVAL

WARNING:

If installing a new brake disc, install new brake pads.

CAUTION:

Brake discs must be renewed in pairs.

NOTES:

- LH illustration shown, RH is similar.
- The brake pad wear warning indicator sensor must be replaced each time the brake pads are serviced.

1. **WARNING:**

   Make sure to support the vehicle with axle stands.

   Raise and support the vehicle.

2. Remove the wheel and tire.

3. **CAUTIONS:**

   - Do not allow the brake caliper to hang on the brake hose.
   - LH side: Do not allow the brake caliper to hang on the brake pad wear warning sensor lead.

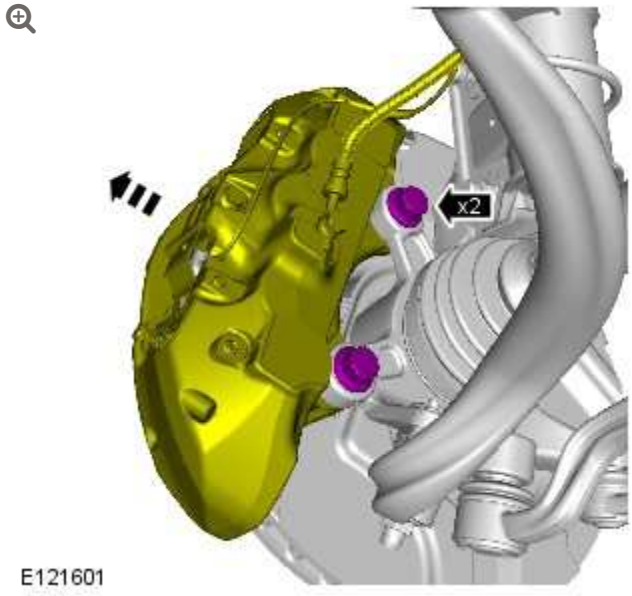

Remove the brake caliper anchor bolts.

- Release the brake caliper.
- Tie the brake caliper aside.

4.

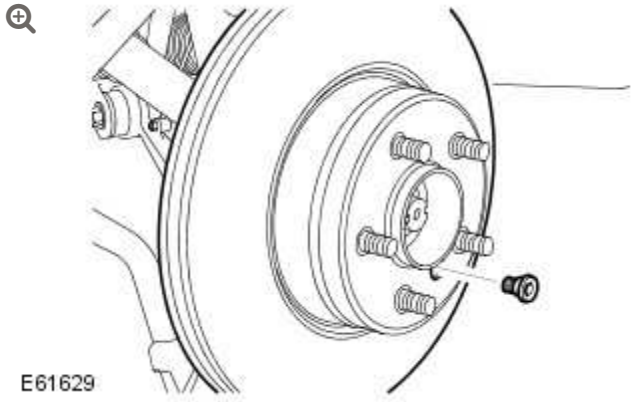

Remove the brake disc.

- Remove the Allen screw.

INSTALLATION

1. Make sure the brake disc and hub mating surfaces are clean.

2. Install the brake disc.
    - Tighten the Allen screw to 16 Nm (12 lb.ft).

3. Install the brake caliper and tighten the bolts to 275 Nm (203 lb.ft)
    - Clean the component mating faces.

4. Install the wheel and tire.
    - Tighten the wheel nuts to 140 Nm (103 lb.ft).

5. Depress the brake pedal several times, check the fluid level in the brake fluid reservoir and top-up with brake fluid if necessary.

FRONT DISC BRAKE

BRAKE DISC – VEHICLES WITH: STANDARD BRAKES

(G1224076)

REMOVAL AND INSTALLATION

70.12.10	DISC - FRONT - EACH - RENEW	ALL DERIVATIVES	0.5	USED WITHINS	+
70.12.33	DISC - REAR - EACH - RENEW	ALL DERIVATIVES	0.9	USED WITHINS	+

REMOVAL

WARNING:

If installing a new brake disc, install new brake pads.

CAUTION:

Brake discs must be renewed in pairs.

NOTES:

- LH illustration shown, RH is similar.
- Some variation in the illustrations may occur, but the essential information is always correct.
- The brake pad wear warning indicator sensor must be replaced each time the brake pads are serviced.

1. **WARNING:**

   Make sure to support the vehicle with axle stands.

   Raise and support the vehicle.

2. Remove the front wheel and tire.

3. **CAUTION:**

   The brake pad wear indicator sensor is easily damaged. Do not use a lever to remove the sensor. Use fingers only.

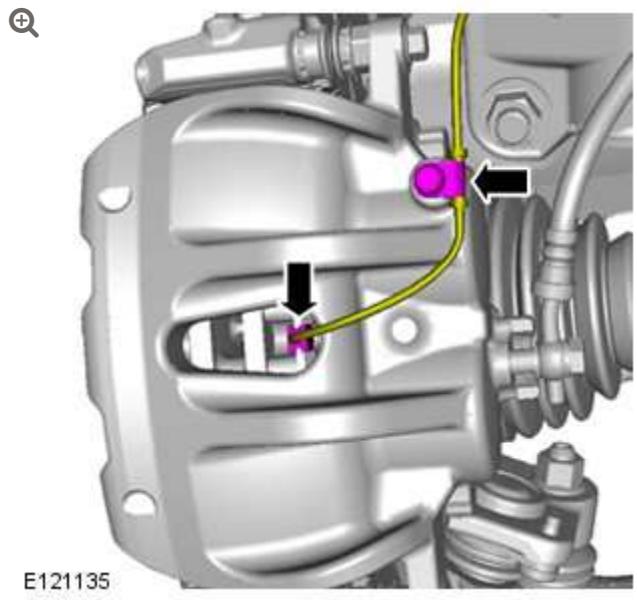

LH side front: Disconnect the brake pad wear indicator sensor wiring harness.

4.

NOTE:

Use an additional wrench to prevent the component from rotating.

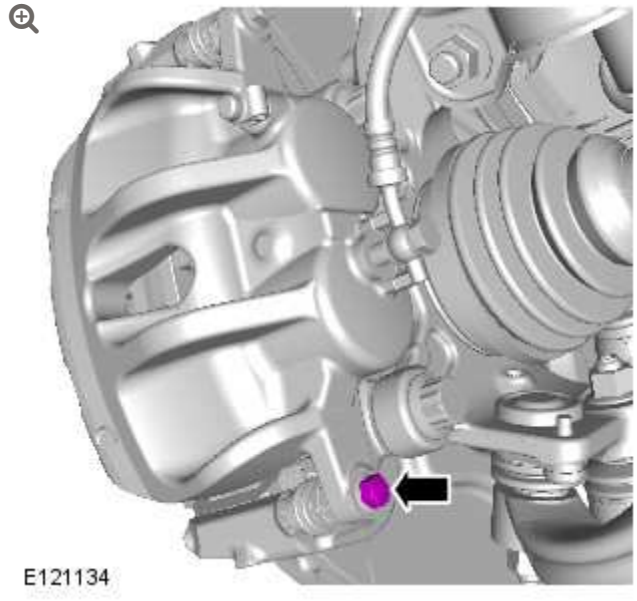

Remove the brake caliper lower bolt.

5. **NOTE:**

Note the orientation of the brake pads.

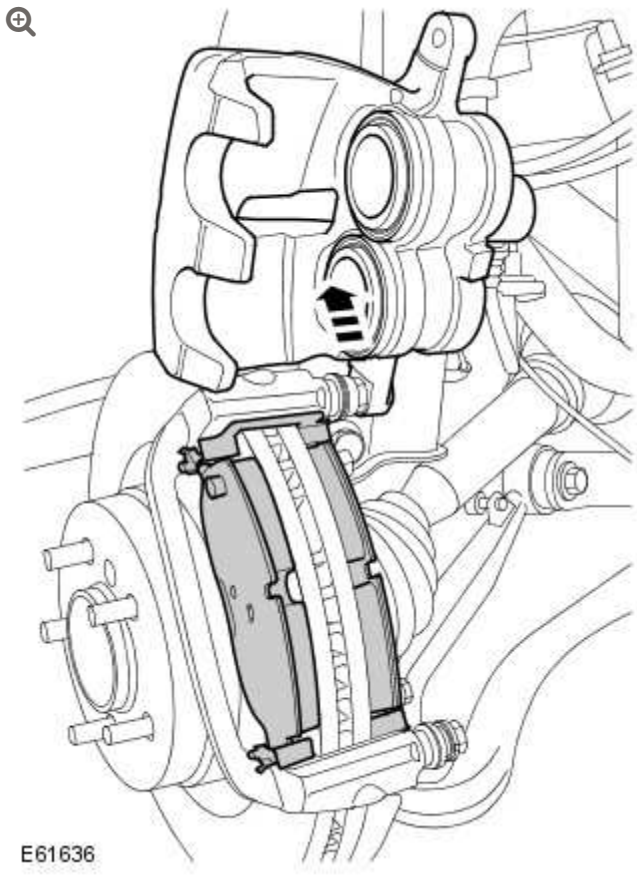

Remove the brake pads.

- Rotate the brake caliper upwards.
- Remove the 2 clips.

6. **CAUTION:**

Do not allow the brake caliper to hang on the brake hose.

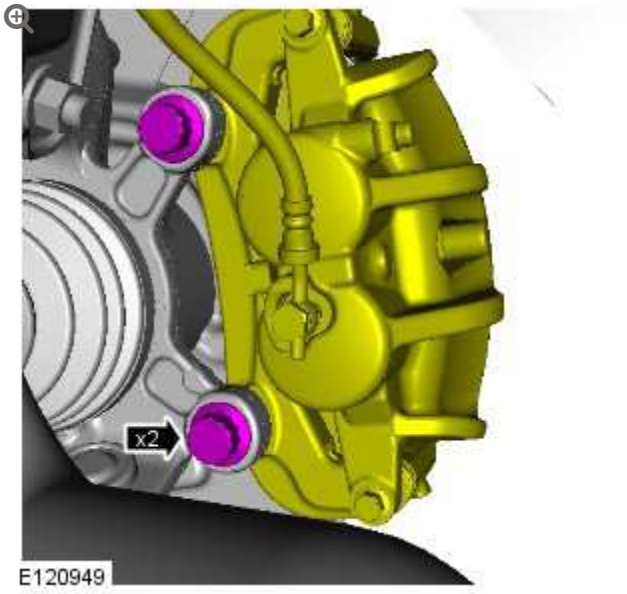

Remove the brake caliper.

- Remove the brake caliper anchor bolts.
- Tie the brake caliper aside.

7.

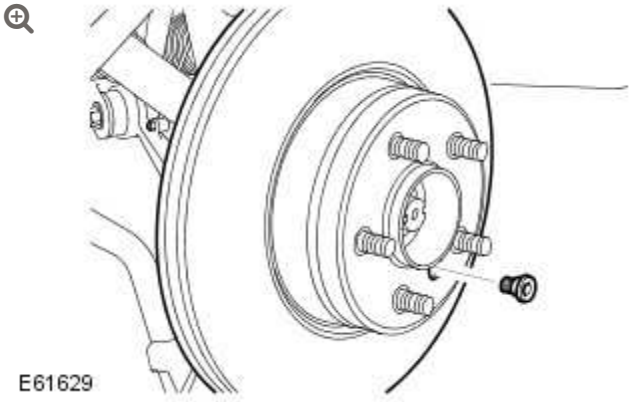

Remove the front brake disc.

- Remove the Allen screw.

INSTALLATION

1. Make sure the brake disc and hub mating surfaces are clean.

2. Install the brake disc.
    - Tighten the Allen screw to 16 Nm (12 lb.ft).

3. Install the brake caliper.
    - Clean the component mating faces.
    - Tighten the bolts to 275 Nm (203 lb.ft).

4. **WARNING:**

    Do not use compressed air to clean brake components. Dust from friction materials can be harmful if inhaled.

    Clean the brake caliper housing and anchor plate using brake cleaning fluid.

5. Inspect the caliper piston and slide pin seals for damage.

6. **CAUTIONS:**

    - The brake caliper should move freely on both slide pins.
    - If necessary, renew the components.

    Check the slide pins for correct operation.

7.

CAUTION:

Check the brake fluid reservoir level before pushing the piston back, failure to follow this instruction may result in damage to the vehicle.

NOTE:

As the piston is pushed back into the caliper housing, the brake fluid level in the reservoir will rise. Do not allow the reservoir to overflow.

Press the pistons into the caliper housing.

8. **NOTE:**

   Make sure the brake pads are installed in the correct orientation.

   Install the brake pads.

   - Install the 2 clips.
   - Apply a suitable amount of the supplied grease to the mating faces of the brake pads and brake calipers.

9. Rotate the brake caliper downwards.
   - Tighten the bolt to 32 Nm (24 lb.ft).

10. LH side front: Connect the brake pad wear indicator wiring harness.

11. **NOTE:**

Tighten the wheel nuts in the sequence shown:

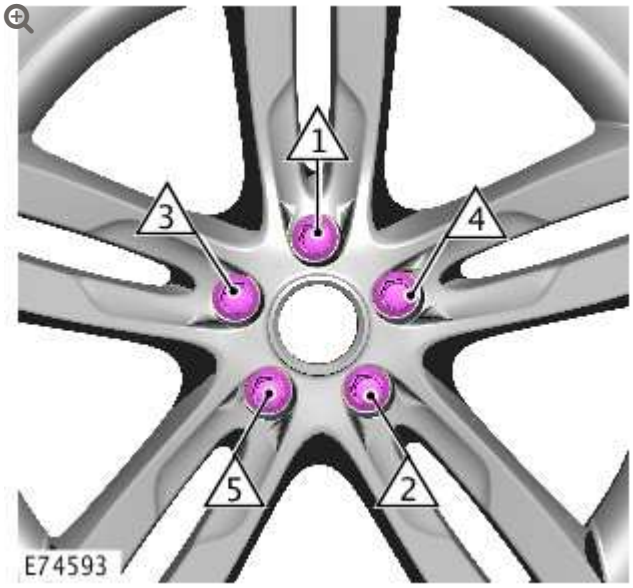

Install the wheels and tires.

- Stage 1 : 4Nm
- Stage 2 : 70Nm
- Stage 3 : 140Nm

12. Depress the brake pedal several times, check the fluid level in the brake fluid reservoir and top-up with brake fluid if necessary.

FRONT DISC BRAKE

BRAKE PADS – VEHICLES WITH: HIGH PERFORMANCE BRAKES

(G1224071)

REMOVAL AND INSTALLATION

70.40.02	SHOES/PADS - FRONT - SET - RENEW	ALL DERIVATIVES	0.7	USED WITHINS	+
70.40.02.36	SHOES/PADS - FRONT - SET - RENEW - BREMBO/SPORTS BRAKES FITTED	ALL DERIVATIVES	0.8	USED WITHINS	+
70.40.03	SHOES/PADS - REAR - SET - RENEW	ALL DERIVATIVES	0.7	USED WITHINS	+

REMOVAL

WARNING:

Brake pads must be renewed in axle sets only. Failure to follow this instruction may result in braking efficiency being impaired.

NOTE:

The brake pad wear warning indicator sensor must be replaced each time the brake pads are serviced.

1. **WARNING:**

   Make sure to support the vehicle with axle stands.

   Raise and support the vehicle.

2. Remove the wheels and tires.

3.

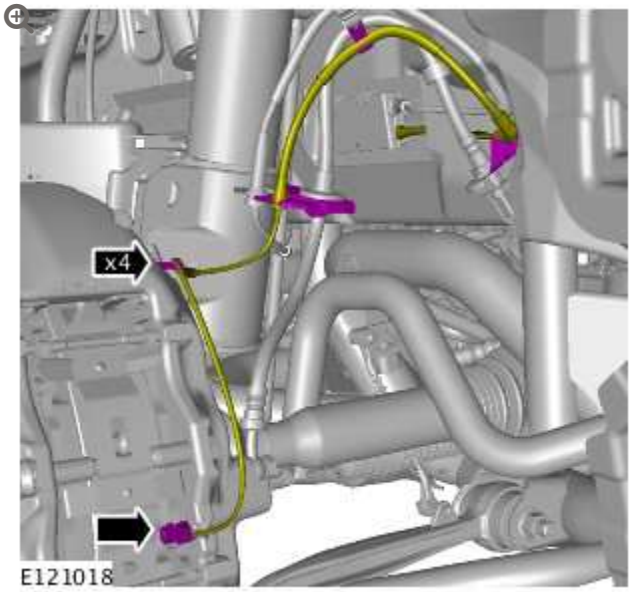

LH side front: Disconnect the brake pad wear indicator sensor wiring harness.

4.

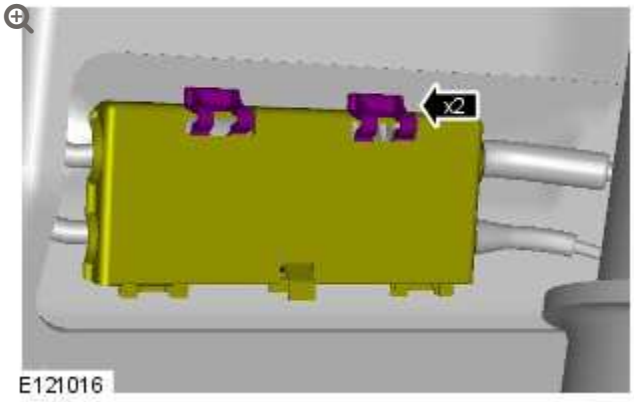

Release the antilock brake system (ABS) junction box cover.

5.

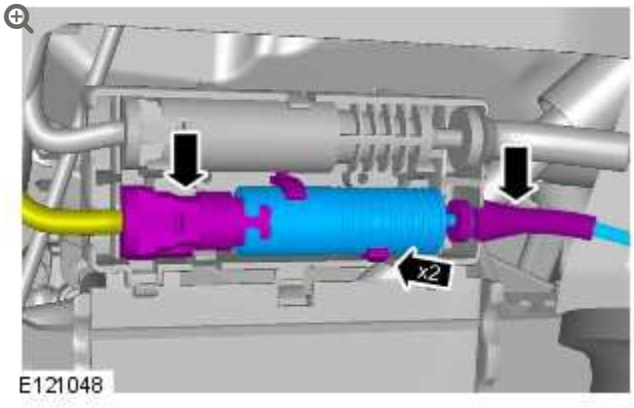

LH side front: Release and disconnect the brake pad wear indicator wiring harness.

6.

NOTES:

- Note the orientation of the brake pads.
- Note the orientation of the anti-rattle spring prior to removal.

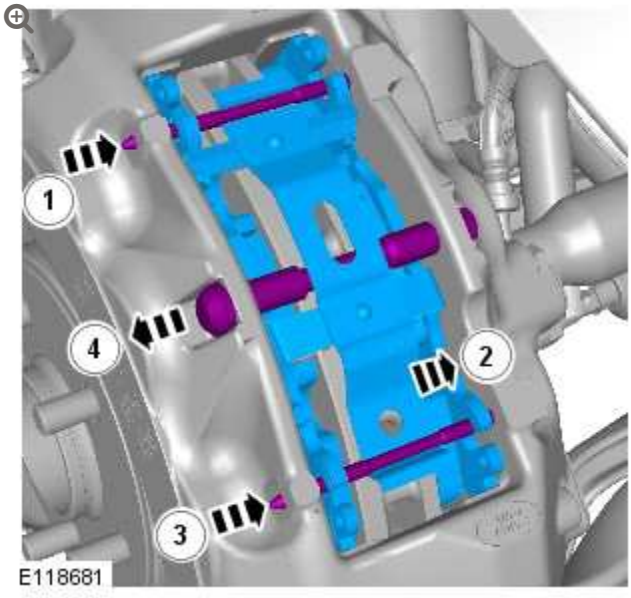

Remove the front brake pads.

- Remove the 2 retaining pins.

- Remove the anti-rattle spring.
- Remove the bridge bolt from the centre of the caliper.

7. Repeat the above step for the other side.

INSTALLATION

1. **WARNING:**

   Do not use compressed air to clean brake components. Dust from friction materials can be harmful if inhaled.

   Clean the components.

2. Inspect the caliper piston seals for damage.

3. Position a bleed jar containing a small quantity of approved brake fluid. Connect the bleed tube to the bleed screw and loosen the screw.

4. Press the pistons into the caliper housing.
   - Tighten the bleed screw to 19 Nm (14 lb.ft).

5. Repeat the above process for the other 3 pistons.

6. Disconnect the bleed tube and remove the jar.

7.

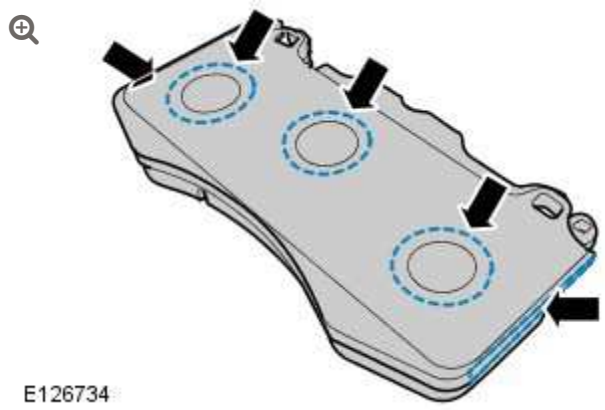

Apply grease LR020972 (Molykote CU7439 plus) to the areas indicated on the brake pads.

8. **NOTES:**

   - Make sure the brake pads are installed in the correct orientation.
   - Make sure the anti-rattle spring is installed in the correct orientation.

   Install the brake pads.

   - Tighten the bridge bolt to 30 Nm (22 lb.ft.).
   - Position the anti-rattle spring.
   - Install the pins, making sure the pin collets are fully engaged in the caliper.

9. Repeat the above procedure for the other side.

10. LH side front: Connect the brake pad wear indicator wiring harness electrical connection.

11. Secure the ABS junction box cover.

12. LH side front: Connect the brake pad wear indicator wiring harness.

13. Install the wheels and tires.
    - Tighten the wheel nuts to 140 Nm (103 lb.ft).

14. Depress the brake pedal several times, check the fluid level in the brake fluid reservoir and top-up with brake fluid if necessary.

FRONT DISC BRAKE

BRAKE PADS – VEHICLES WITH: STANDARD BRAKES

(G1224077)

REMOVAL AND INSTALLATION

70.40.02	SHOES/PADS – FRONT – SET – RENEW	ALL DERIVATIVES	0.7	USED WITHINS	+
70.40.02.36	SHOES/PADS – FRONT – SET – RENEW – BREMBO/SPORTS BRAKES FITTED	ALL DERIVATIVES	0.8	USED WITHINS	+
70.40.03	SHOES/PADS – REAR – SET – RENEW	ALL DERIVATIVES	0.7	USED WITHINS	+

REMOVAL

WARNING:

Brake pads must be renewed in axle sets only, otherwise braking efficiency may be impaired.

NOTES:

- Some variation in the illustrations may occur, but the essential information is always correct.
- The brake pad wear warning indicator sensor must be replaced each time the brake pads are serviced.

1. **WARNING:**

   Make sure to support the vehicle with axle stands.

   Raise and support the vehicle.

2. Remove the wheels and tires.

3. 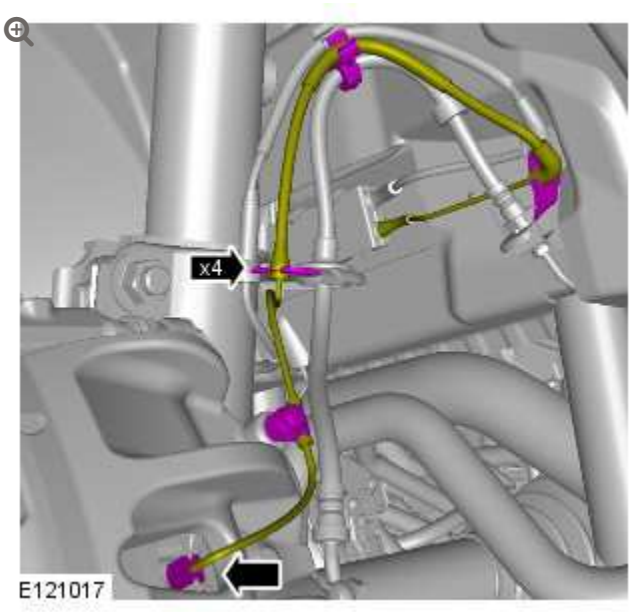

   LH side front: Disconnect the brake pad wear indicator sensor wiring harness.

4.

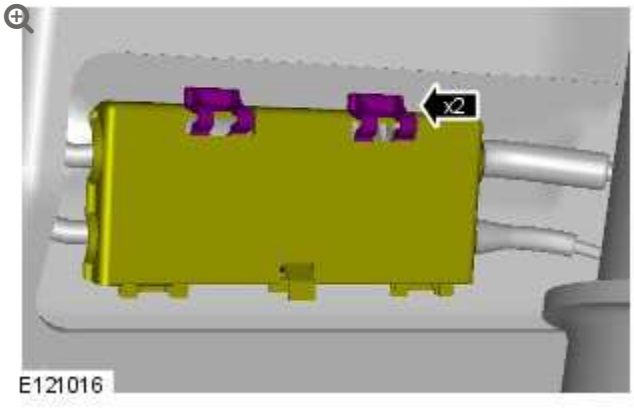

Release the antilock brake system (ABS) junction box cover.

5.

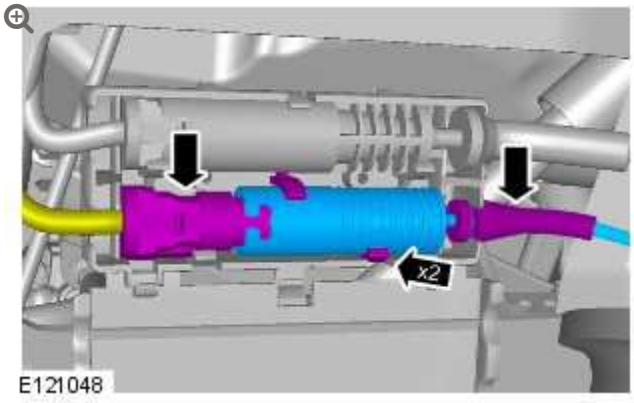

LH side front: Release and disconnect the brake pad wear indicator wiring harness.

6.

NOTE:

Use an additional wrench to prevent the component from rotating.

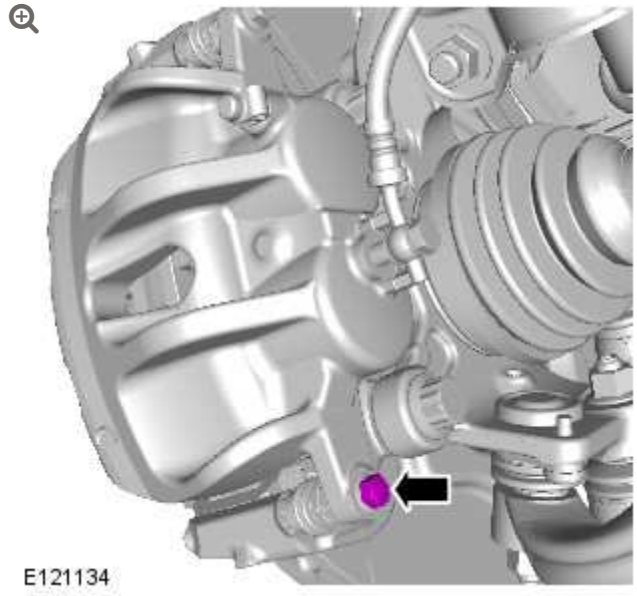

Remove the brake caliper lower bolt.

7.

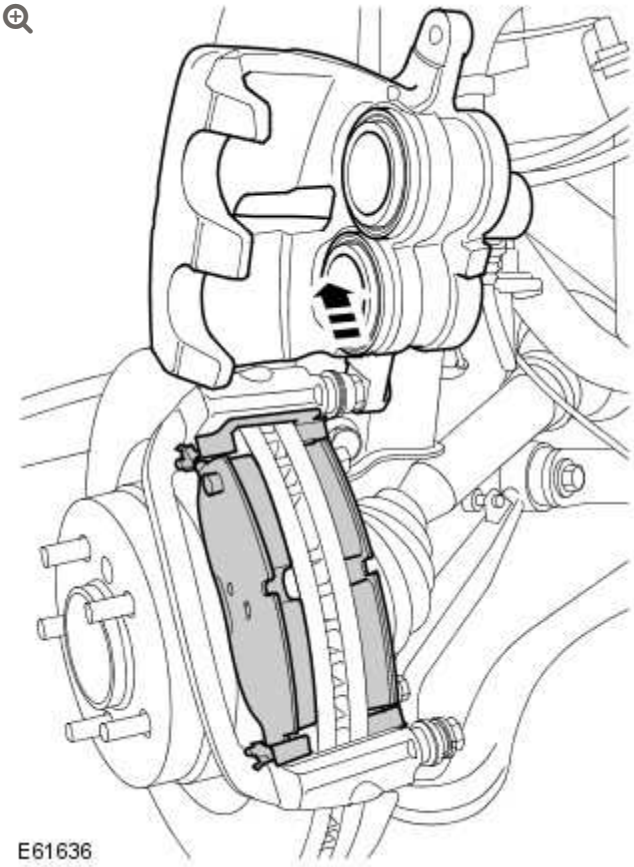

Remove the brake pads.

- Rotate the brake caliper upwards.

- Remove the 2 clips.

8. Repeat the above 2 steps for the other side.

INSTALLATION

1. **WARNING:**

> Do not use compressed air to clean brake components. Dust from friction materials can be harmful if inhaled.

Clean the brake caliper housing and anchor plate using brake cleaning fluid.

2. Inspect the caliper piston and slide pin seals for damage.

3. **CAUTIONS:**

> - The brake caliper should move freely on both slide pins.
> - If necessary, renew the components.

Check the slide pins for correct operation.

4. **CAUTION:**

> Check the brake fluid reservoir level before pushing the piston back, failure to follow this instruction may result in damage to the vehicle.

NOTE:

As the piston is pushed back into the caliper housing, the brake fluid level in the reservoir will rise. Do not allow the reservoir to overflow.

Press the pistons into the caliper housing.

5. Install the brake pads.
   - Install the 2 clips.
   - Apply a suitable amount of the supplied grease to the mating faces of the brake pads and brake calipers.

6. Rotate the brake caliper downwards.
   - Tighten the bolt to 32 Nm (24 lb.ft).

7. Repeat the above procedure for the other side.

8. LH side front: Connect and attach the brake pad wear indicator wiring harness electrical connection.

9. Secure the ABS junction box cover.

10. LH side front: Connect the brake pad wear indicator wiring harness.

11. **NOTE:**

    Tighten the wheel nuts in the sequence shown:

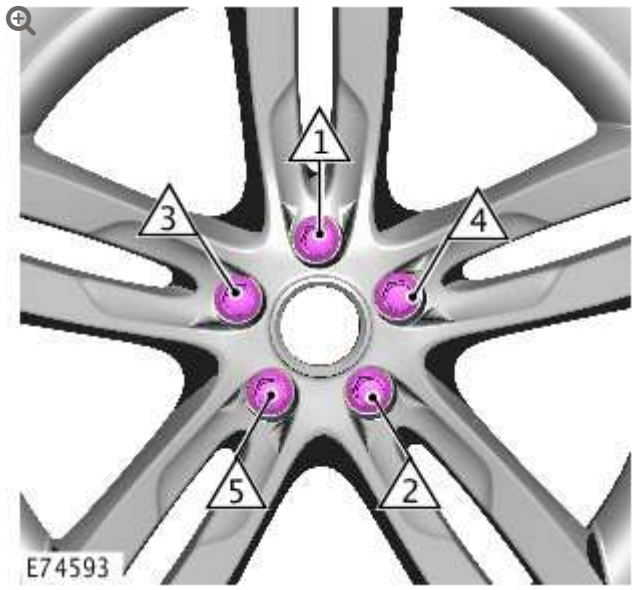

Install the wheels and tires.

- Stage 1 : 4Nm
- Stage 2 : 70Nm
- Stage 3 : 140Nm

12. Depress the brake pedal several times, check the fluid level in the brake fluid reservoir and top-up with brake fluid if necessary.

REAR DISC BRAKE

SPECIFICATIONS

Item	Specification
Disc type	Ventilated
Disc diameter - Vehicles with standard brakes	354 mm (13.9 in)
Disc diameter - Vehicles with high performance brakes	365 mm (14.4 in)
Disc thickness:	
New	20.0 mm (0.78 in)
Service limit	18.0 mm (0.71 in)
Maximum disc run-out - disc installed	0.09 mm (0.003 in)
Caliper type	Sliding pin, single piston
Piston diameter	45.0 mm (1.7 in)
Pad minimum thickness	3.0 mm (0.12 in)
Brake pad wear warning lead:	
Location	Rear right hand brake pad
Activates at	75% of pad life utilised

Torque Specifications

DESCRIPTION	NM	LB-FT
Brake caliper bleed screw	10	7

DESCRIPTION	NM	LB-FT
Brake hose union	32	24
Brake disc retaining bolt	16	12
* Brake caliper anchor plate to hub bolts:		
Stage 1	65	48
Stage 2	Further 90°	Further 90°
Brake caliper housing to anchor plate bolts	35	26

*** New bolts must be installed**

REAR DISC BRAKE

BRAKE CALIPER (G1224637)

REMOVAL AND INSTALLATION

70.55.25	HOUSING ASSEMBLY - BRAKE CALIPER - REAR - EACH - RENEW	ALL DERIVATIVES	0.5	USED WITHINS	+

REMOVAL

NOTES:

- Some variation in the illustrations may occur, but the essential information is always correct.
- RH illustration shown, LH is similar.

1.

WARNING:

Make sure to support the vehicle with axle stands.

Raise and support the vehicle.

2. Remove the wheel and tire.

3. **CAUTION:**

> The brake pad wear indicator sensor is easily damaged. Do not use a lever to remove the sensor. Use fingers only.

RH side only: Disconnect the brake pad wear indicator sensor.

- Release from the clip.

4. **NOTE:**

> Use an additional wrench to prevent the component from rotating.

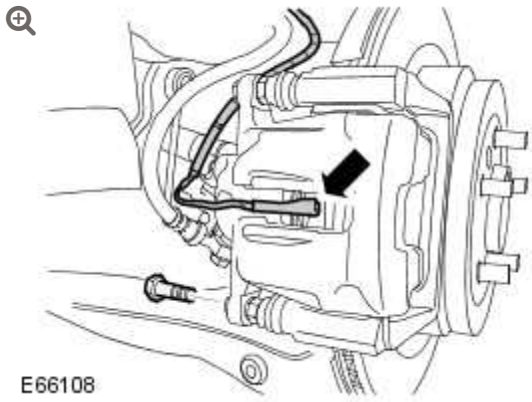

Remove the brake caliper lower bolt.

5.

CAUTION:

Before disconnecting or removing components, ensure the area around the joint faces and connections are clean. Plug open connections to prevent contamination.

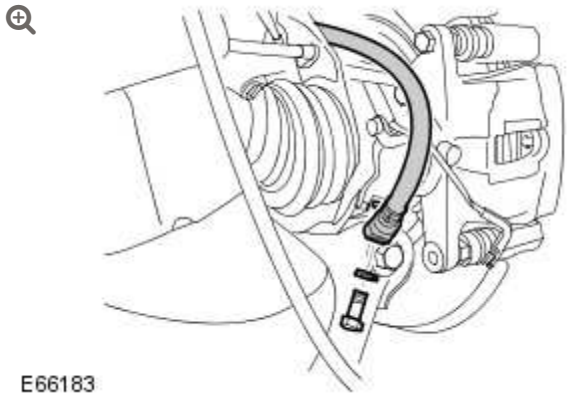

Disconnect the brake hose from the brake caliper.

- Remove the union.
- Remove and discard the two sealing washers.
- Install blanking caps to the exposed ports.

6.

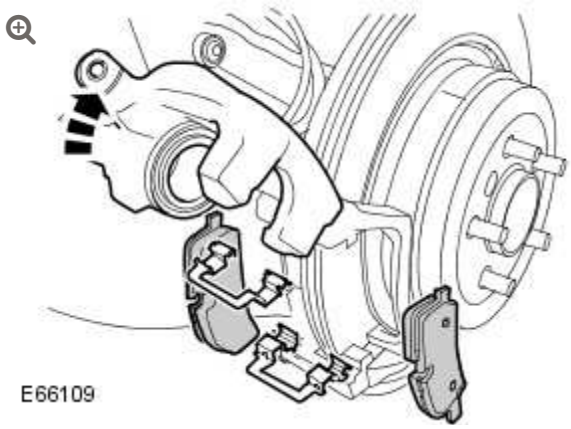

Remove the brake pads.

- Rotate the brake caliper upwards.

- Remove the two clips.

7. **NOTE:**

Use an additional wrench to prevent the component from rotating.

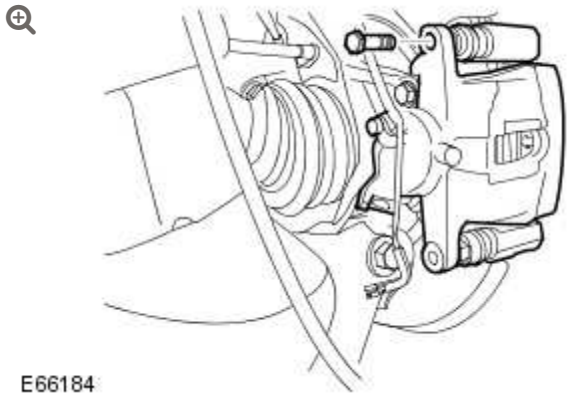

Remove the brake caliper housing.

- Remove the brake caliper upper bolt.

INSTALLATION

1. **WARNING:**

Do not use compressed air to clean brake components. Dust from friction materials can be harmful if inhaled.

Clean the brake caliper housing and anchor plate using brake cleaning fluid.

2.

CAUTIONS:

- The brake caliper should move freely on both slide pins.
- If necessary, renew the components.

Check the caliper slide pins.

- Check for correct operation.
- Check the condition of the caliper slide pin seals.

3. **NOTE:**

Use an additional wrench to prevent the component from rotating.

Install the brake caliper.

- Tighten the brake caliper upper bolt to 35 Nm (26 lb.ft).

4. Install the brake pads.
   - Install the two clips.

5. **NOTE:**

Use an additional wrench to prevent the component from rotating.

Secure the brake caliper.

- Rotate the brake caliper downwards.
-

Tighten the brake caliper lower bolt to 35 Nm (26 lb.ft).

6. Connect the brake hose to the brake caliper.
   - Clean the component mating faces.
   - Remove the blanking caps from the ports.
   - Install new sealing washers.
   - Tighten the brake hose union to 32 Nm (24 lb.ft).

7. Connect the brake pad wear indicator sensor.

8. Bleed the brake system.
   For additional information, refer to: Component Bleeding - Vehicles With: Standard Brakes (206-00, General Procedures).

9. Install the wheel and tire.
   - Tighten the wheel nuts to 140 Nm (103 lb.ft).

REAR DISC BRAKE

BRAKE DISC (G1224635)

REMOVAL AND INSTALLATION

70.12.33	DISC - REAR - EACH - RENEW	ALL DERIVATIVES	0.9	USED WITHINS	+

REMOVAL

WARNING:

If installing a new brake disc, install new brake pads.

CAUTION:

Brake discs must be renewed in pairs.

NOTES:

- If the parking brake shoes or the brake discs have been removed for access to other components then DO NOT carry out the bedding in procedure.
- The brake pad wear warning indicator sensor must be replaced each time the brake pads are serviced.
- RH illustration shown, LH is similar.

1. Using the Land Rover approved diagnostic system, drive the parking brake to the 'mounting position'.

2. Disconnect the battery ground cable.
   For additional information, refer to: Specifications (414-00, Specifications).

3. **WARNING:**

   Make sure to support the vehicle with axle stands.

   Raise and support the vehicle.

4. Remove the rear wheels and tires.

5. **CAUTION:**

   The brake pad wear indicator sensor is easily damaged. Do not use a lever to remove the sensor. Use fingers only.

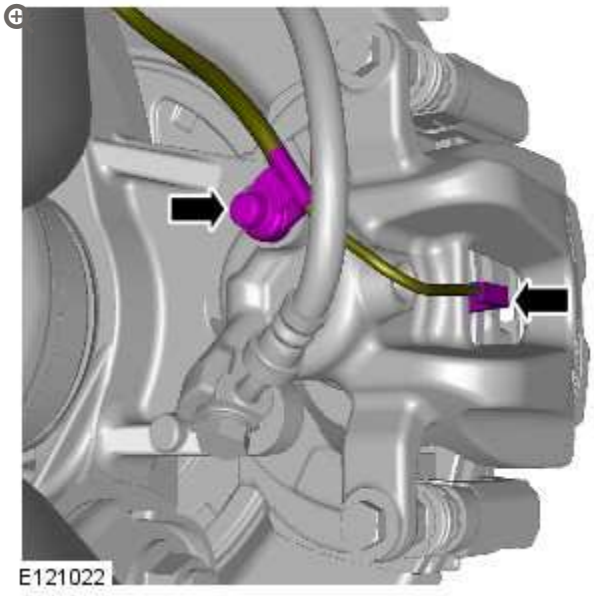

RH side rear: Disconnect the brake pad wear indicator sensor wiring harness.

6.

NOTE:

Use an additional wrench to prevent the component from rotating.

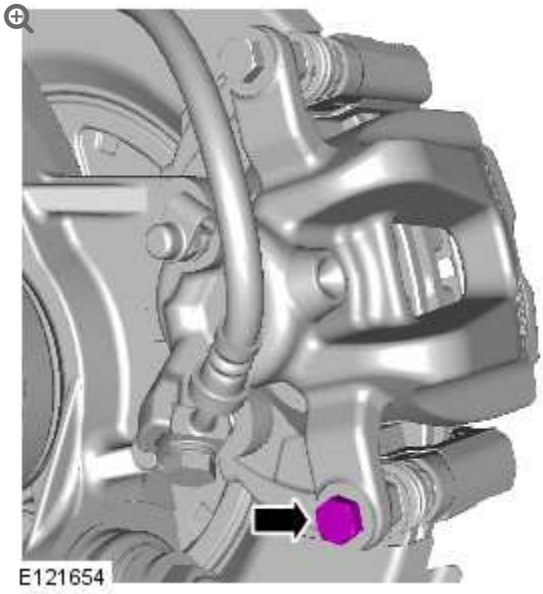

Remove the brake caliper lower bolt.

7. **NOTE:**

Note the orientation of the brake pads.

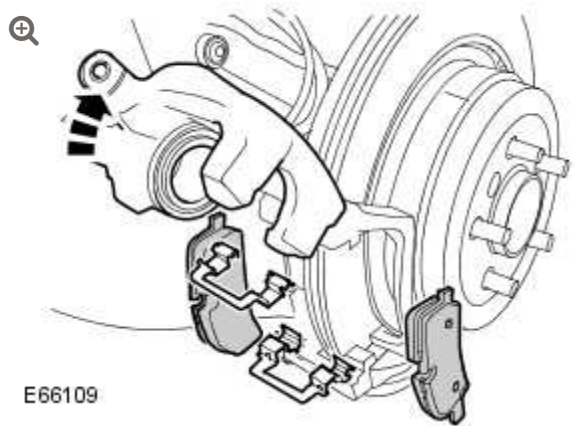

Remove the brake pads.

- Rotate the brake caliper upwards.
- Remove the 2 clips.

8. **CAUTION:**

Do not allow the brake caliper to hang on the brake hose.

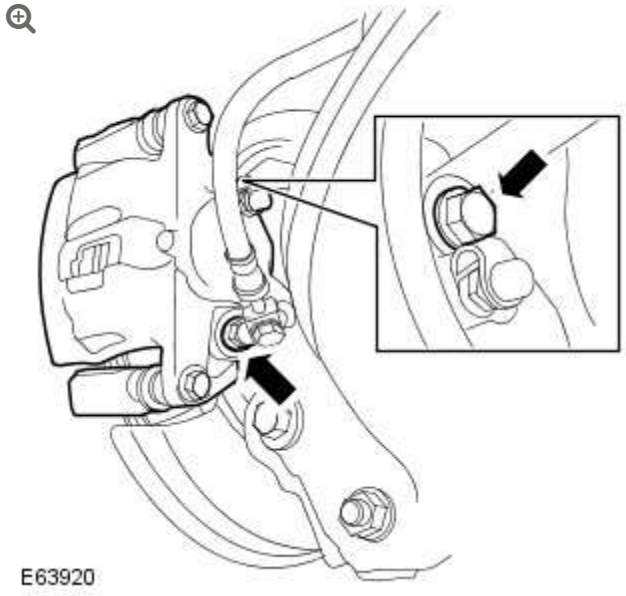

Remove the brake caliper anchor bolts.

- Release the brake caliper.
- Tie the brake caliper aside.

9. **NOTE:**

Rotate the rear brake disc to locate the parking brake shoe adjuster.

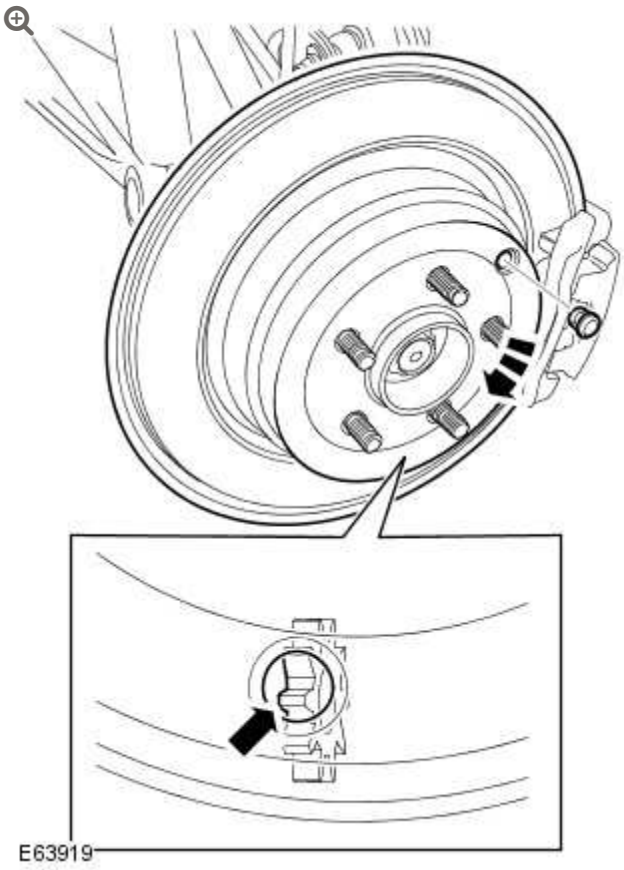

Release the parking brake shoe adjustment.

- Remove the parking brake shoe adjuster access plugs.
- Rotate the parking brake shoe adjuster.

10.

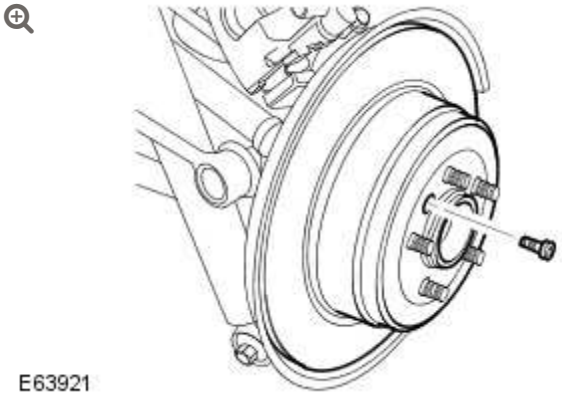

Remove the rear brake disc.

- Remove the Allen screw.

INSTALLATION

1. Make sure that the rear brake disc and hub mating surfaces are clean.

2. Install the rear brake disc.
   - Tighten the Allen screw to 16 Nm (12 lb.ft).

3. Install the brake caliper anchor bolts
   - Clean the component mating faces.
   - Tighten the bolts to 65 Nm (48 lb.ft). plus a further 90 degrees.

4. **WARNING:**

   Do not use compressed air to clean brake components. Dust from friction materials can be harmful if inhaled.

   Clean the brake caliper housing and anchor plate using brake cleaning fluid.

5. Inspect the caliper piston and slide pin seals for damage.

6. **CAUTIONS:**

   - The brake caliper should move freely on both slide pins.
   - If necessary, renew the components.

Check the slide pins for correct operation.

7.

CAUTION:

Check the brake fluid reservoir level before pushing the piston back, failure to follow this instruction may result in damage to the vehicle.

NOTE:

As the piston is pushed back into the caliper housing, the brake fluid level in the reservoir will rise. Do not allow the reservoir to overflow.

Press the piston into the caliper housing.

8.

CAUTION:

If installed, the adhesive strips covering the outer brake pads must be removed before installation. Failure to follow this instruction may result in damage to the vehicle.

If installed, remove the adhesive strips from the 2 outer brake pads.

9.

NOTE:

Make sure the brake pads are installed in the correct orientation.

Install the brake pads.

- Install the 2 clips.

10. Rotate the brake caliper downwards.
    - Tighten the bolt to 32 Nm (24 lb.ft).

11. RH side rear: Connect the brake pad wear indicator sensor wiring harness.

12. Adjust the parking brake.
    For additional information, refer to: Parking Brake Shoe and Lining Adjustment (206-05 Parking Brake and Actuation, General Procedures).

13. **NOTE:**

    Tighten the wheel nuts in the sequence shown:

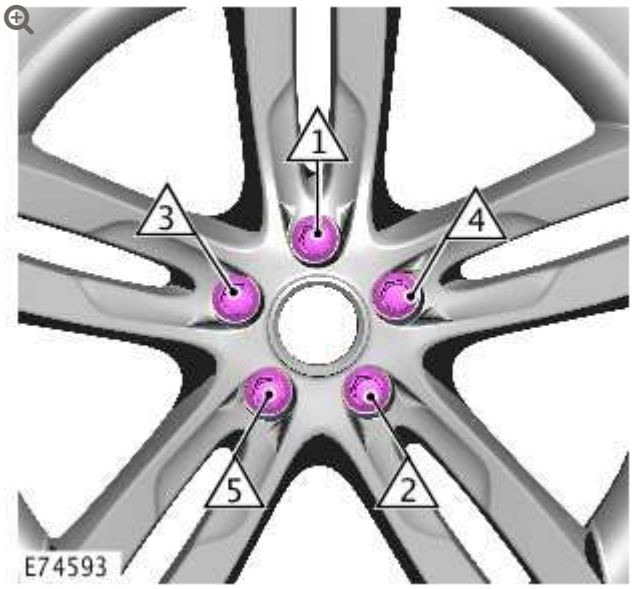

Install the wheels and tires.

- Stage 1 : 4Nm

- Stage 2 : 70Nm
- Stage 3 : 140Nm

14. Connect the battery ground cable.
    For additional information, refer to: Specifications (414-00, Specifications).

REAR DISC BRAKE

BRAKE PADS (G1224636)

REMOVAL AND INSTALLATION

70.40.02	SHOES/PADS - FRONT - SET - RENEW	ALL DERIVATIVES	0.7	USED WITHINS	+
70.40.02.36	SHOES/PADS - FRONT - SET - RENEW - BREMBO/SPORTS BRAKES FITTED	ALL DERIVATIVES	0.8	USED WITHINS	+
70.40.03	SHOES/PADS - REAR - SET - RENEW	ALL DERIVATIVES	0.7	USED WITHINS	+

REMOVAL

WARNING:

Brake pads must be renewed in axle sets only, otherwise braking efficiency may be impaired.

NOTES:

- RH illustration shown, LH is similar.
- The brake pad wear warning indicator sensor must be replaced each time the brake pads are serviced.

1. **WARNING:**

   Make sure to support the vehicle with axle stands.

   Raise and support the vehicle.

2. Remove the wheels and tires.

3. 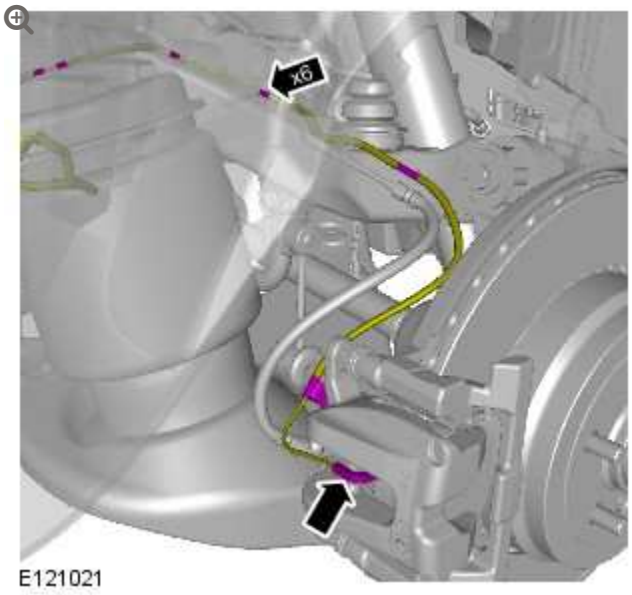

   RH side rear: Disconnect the brake pad wear indicator sensor wiring harness.

4.

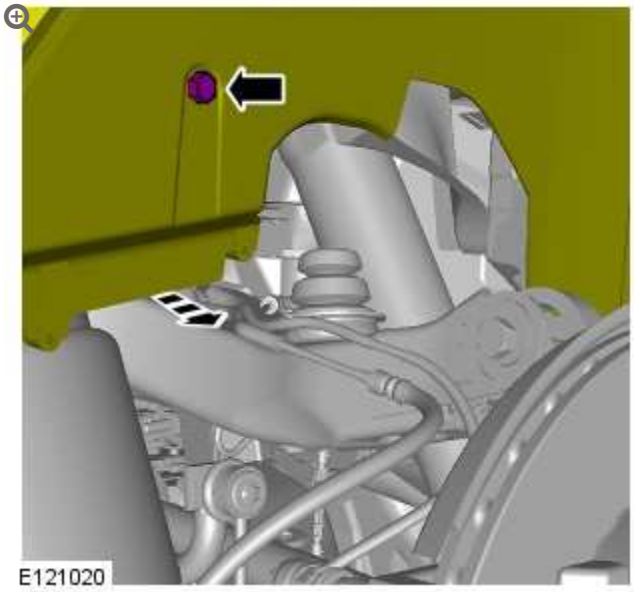

RH side rear: Move the fender splash shield aside for access.

5.

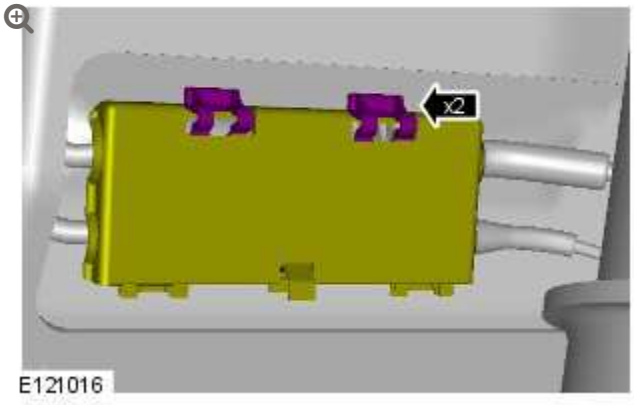

Release the antilock brake system (ABS) junction box cover.

6.

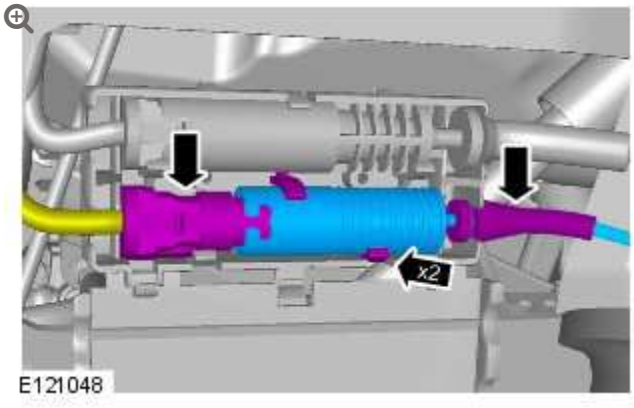

RH side rear: Release and disconnect the brake pad wear indicator wiring harness.

7.

NOTE:

Use an additional wrench to prevent the component from rotating.

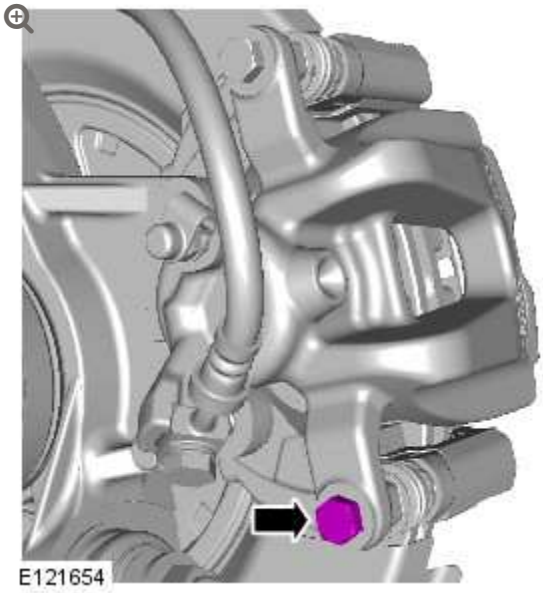

Remove the brake caliper lower bolt.

8.

NOTE:

Note the fitted position.

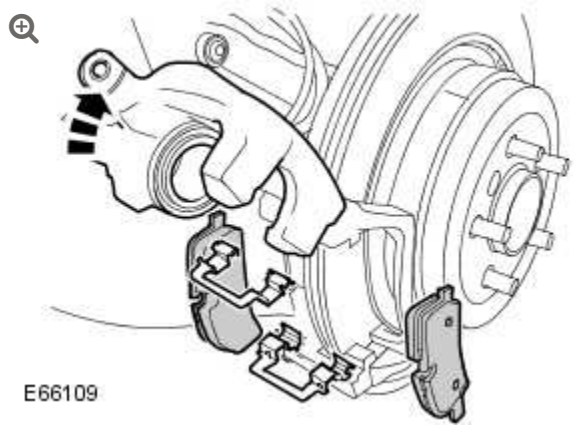

Remove the brake pads.

- Rotate the brake caliper upwards.
- Remove the 2 clips.

9. Repeat the above 2 steps for the other side.

INSTALLATION

1. **WARNING:**

Do not use compressed air to clean brake components. Dust from friction materials can be harmful if inhaled.

Clean the brake caliper housing and anchor plate using brake cleaning fluid.

2. Inspect the caliper piston and slide pin seals for damage.

3. **CAUTIONS:**

- The brake caliper should move freely on both slide pins.
- If necessary, renew the components.

Check the slide pins for correct operation.

4. **CAUTION:**

Check the brake fluid reservoir level before pushing the piston back, failure to follow this instruction may result in damage to the vehicle.

NOTE:

As the piston is pushed back into the caliper housing, the brake fluid level in the reservoir will rise. Do not allow the reservoir to overflow.

Press the piston into the caliper housing.

5. **CAUTION:**

If installed, the adhesive strips covering the outer brake pads must be removed before installation. Failure to follow this instruction may result in damage to the vehicle.

If installed, remove the adhesive strips from the 2 outer brake pads.

6. Install the brake pads.
   - Install the 2 clips.

7. Rotate the brake caliper downwards.
   - Tighten the bolt to 32 Nm (24 lb.ft).

8. Repeat the above procedure for the other side.

9. RH side rear: Connect and attach the brake pad wear indicator wiring harness electrical connection.

10. Secure the ABS junction box cover.

11. Secure the fender splash shield.

12. RH side rear: Connect the brake pad wear indicator sensor wiring harness.

13. **NOTE:**

    Tighten the wheel nuts in the sequence shown:

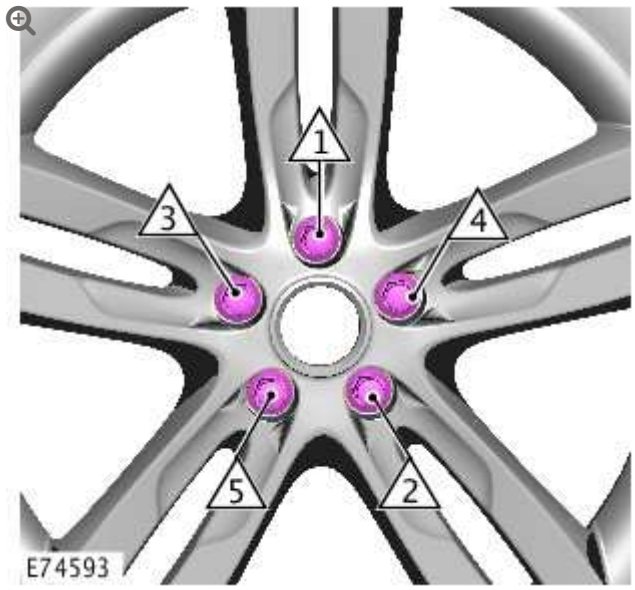

Install the wheels and tires.

- Stage 1 : 4Nm
- Stage 2 : 70Nm
- Stage 3 : 140Nm

14. Depress the brake pedal several times, check the fluid level in the brake fluid reservoir and top-up with brake fluid if necessary.

2012.0 RANGE ROVER (LM), 206-04

REAR DISC BRAKE

DIAGNOSIS AND TESTING

For additional information.

REFER to: Brake System (206-00, Diagnosis and Testing).

2012.0 RANGE ROVER (LM), 206-04

REAR DISC BRAKE

DESCRIPTION AND OPERATION

COMPONENT LOCATION

COMPONENT LOCATIONS

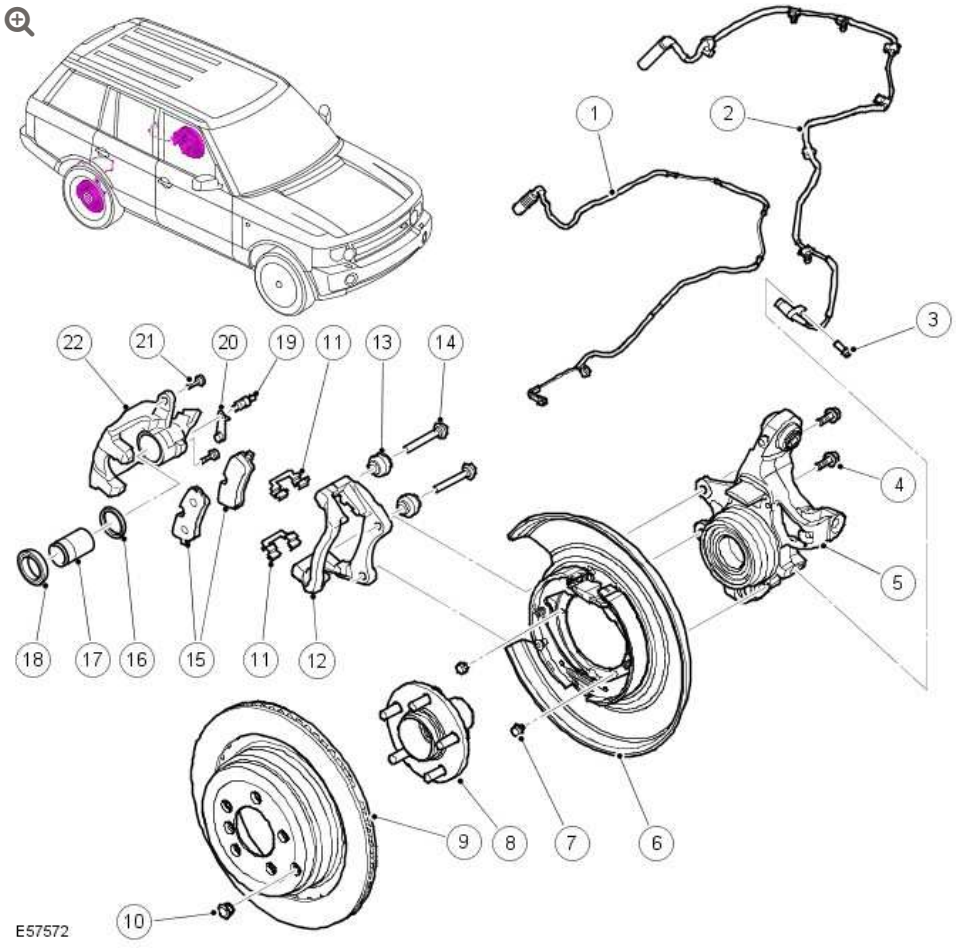

ITEM	DESCRIPTION
1	Brake pad wear sensor lead

ITEM	DESCRIPTION
2	Wheel speed sensor
3	Wheel speed sensor bolt
4	Caliper bolt (x 2)
5	Rear knuckle
6	Backplate assembly and dust shield
7	Dust shield screw (x 2)
8	Drive flange assembly
9	Brake disc
10	Brake disc retaining bolt
11	Brake pad retainers
12	Caliper carrier
13	Guide pin dust cover (x 2)
14	Guide pin (x 2)
15	Brake pad
16	Piston seal
17	Piston
18	Piston dust cover
19	Bleed screw
20	Bleed screw dust cap
21	Guide pin bolts (x 2)
22	Caliper body

GENERAL

The rear brakes on all models feature ventilated brake discs with different diameter brake discs dependant on the vehicle variant. For additional information, refer to: Specifications (206-04, Specifications).

The brakes feature single piston sliding calipers with the brake caliper attached to the rear of the rear knuckle. The brake pads are made from an asbestos free material. The inboard brake pad of the right rear brake incorporates a wear sensor.

When hydraulic pressure is supplied to the caliper, the piston extends and forces the inner pad against the disc. The caliper body reacts and slides on the guide pins to bring the outer pad into contact with the disc.

The rear brake pad wear sensor is connected in series with the front brake pad wear sensor, between the instrument cluster and ground. When a brake pad incorporating a brake pad wear sensor is approximately 75% worn, the brake pad wear sensor goes open circuit. When the instrument cluster detects the open circuit, it illuminates the brake warning indicator, displays an appropriate warning in the message center and sounds a warning chime.
For additional information, refer to: Instrument Cluster (413-01, Description and Operation).

At the beginning of each ignition cycle, the instrument cluster performs a bulb check on the brake warning indicator: the indicator is illuminated amber for 1.5 seconds, then red for 1.5 seconds.

The parking brake is common on all models.
For additional information, refer to: Parking Brake (206-05, Description and Operation).

PARKING BRAKE AND ACTUATION

SPECIFICATIONS

General Specification

Item	Specification
Operation	Twin shoe (leading/trailing) operating on rear wheels, controlled from a floor console EPB switch via an actuator and twin cables.
Minimum brake lining material thickness	2.0 mm (0.078 in)

Torque Specifications

DESCRIPTION	NM	LB-FT
* Rear brake disc retaining bolt	16	12
* Brake caliper anchor plate to wheel knuckle bolts:		
Stage 1	15	11
Stage 2	Further 60°	Further 60°
* Brake caliper to anchor plate bolts	35	26
Parking brake cable to wheel knuckle bolt	8	6
Parking brake cable to upper arm support clip bolt	5	4
Parking brake actuator bolts	9	7
Parking brake cable to actuator nut	6	4

DESCRIPTION	NM	LB-FT

*** New nuts/bolts must be installed**

2012.0 RANGE ROVER (LM), 206-05

PARKING BRAKE AND ACTUATION

DIAGNOSIS AND TESTING

PRINCIPLES OF OPERATION

For additional information on the Parking Brake system, refer to the relevant section of the workshop manual.

INSPECTION AND VERIFICATION

CAUTION:

Diagnosis by substitution from a donor vehicle is NOT acceptable. Substitution of control modules does not guarantee confirmation of a fault, and may also cause additional faults in the vehicle being tested and/or the donor vehicle.

1. Verify the customer concern.
2. Visually inspect for obvious signs of mechanical or electrical damage.

Visual Inspection

MECHANICAL	ELECTRICAL

MECHANICAL	ELECTRICAL
▪ Parking brake cable(s) condition and installation ▪ Parking brake shoes condition and installation ▪ Parking brake drums (integrated into rear brake discs) ▪ Parking brake actuator module condition and installation	▪ Parking brake indicators ▪ Fuses ▪ Wiring harness/electrical connectors ▪ Check for bent/corroded pins ▪ Controller Area Network (CAN) circuits ▪ Parking brake switch ▪ Parking brake actuator module

3. If an obvious cause for an observed or reported concern is found, correct the cause (if possible) before proceeding to the next step.

4. If the cause is not visually evident, verify the symptom and refer to the Symptom Chart below, alternatively check for Diagnostic Trouble Codes (DTCs) and refer to the DTC Index.

SYMPTOM CHART

SYMPTOM	POSSIBLE CAUSES	ACTION
Parking brake will not engage or release	▪ Parking brake cables fouled, trapped or damaged ▪ Parking brake cables incorrectly routed or fixed ▪ Parking brake shoes, linings worn/contaminated ▪ Parking brake drums (integrated into rear brake discs)	Check the parking brake cables for fouling, trapping or damage. Check the cables for correct routing. Check that the cable end fitting connector(s) are correctly installed to the operating lever(s). Inspect the parking brake shoes and drums for condition/wear/contamination. Check the parking brake shoes for correct adjustment. Refer to workshop manual section 206-05. Check the operation of the parking brake actuator module, check for damage and/or
Low parking brake efficiency/parking brake sticking/binding		

SYMPTOM	POSSIBLE CAUSES	ACTION
	▪ Parking brake shoes incorrectly adjusted following replacement ▪ Parking brake actuator module malfunction	excessive noise during operation. Check for parking brake actuator module DTCs.

DTC INDEX

For a list of Diagnostic Trouble Codes (DTCs) that could be logged on this vehicle, please refer to Section 100-00. REFER to: Diagnostic Trouble Code (DTC) Index - DTC: Module Name: Parking Brake Module (100-00, Description and Operation).

BRAKE BEDDING MODE

Bedding mode is a special mode available in the parking brake module (PBM) that disables the stability assist system (ABS) and allows the parking brake to provide the braking force rather than the conventional braking system whilst the vehicle is moving at a velocity of >3kph. This mode is entered via a series of brake pedal presses and switch applications, full details on this procedure is available in the relevant section of the workshop manual. If brake bedding mode is entered accidentally by the driver the RED warning lamp will flash in the Instrument Pack, the module will return to normal operational mode when the ignition has been cycled. This DTC (C110468) is intended to highlight the fact that although the RED lamp was illuminated there was no fault present in the control module.
REFER to: Parking Brake Shoes Bedding-In (206-05 Parking Brake and Actuation, General Procedures).

DRIVE CYCLES

Drive Cycle 1 Description

- Ignition On
- Make sure that no parking brake activation (diagnostic command or switch input) is attempted for a minimum of 3 seconds
- Retest for functionality

Drive Cycle 2 Description

- Ignition On
- Drive vehicle at a constant speed of 20KPH (13MPH) or slightly above in 2nd gear
- At a constant speed of 20KPH (13MPH) or slightly above apply the parking brake via the parking brake switch
- Press the brake pedal

Drive Cycle 3 Description

- Ignition On
- Make sure that the vehicle is stationary and that the parking brake is released
- Pull the parking brake switch to the apply position and hold in this position until the parking brake motor has stopped (this may take up to 5 seconds)
- Release the parking brake switch to the idle position, leave in the idle position for 2 seconds
- Push the parking brake switch to the release position (while pressing the brake pedal) and keep in this position until the parking brake motor has stopped (this may take up to 5 seconds)
- Release the parking brake switch to the idle position

PARKING BRAKE AND ACTUATION

PARKING BRAKE ACTUATOR (G850440)

REMOVAL AND INSTALLATION

70.35.48	ACTUATOR – ELECTRIC PARKING BRAKE – RENEW	AJ V8, SUPERCHARGED	2.6	USED WITHINS	+

REMOVAL

CAUTION:

It is essential that absolute cleanliness is observed when working on the parking brake actuator. Always cover any open orifices using lint free non-flocking material to prevent the ingress of foreign matter. Failure to follow this instruction may result damage to the components.

NOTE:

It is not necessary to carry out the parking brake shoe 'bedding-in procedure' if the rear brake discs or parking brake shoes have been removed for access to other components.

1. Release the electronic parking brake.

2. Using the Land Rover approved diagnostic system, drive the parking brake to the mounting position.

3. Using the Land Rover approved diagnostic system, depressurize the air suspension.
   For additional information, refer to: Air Suspension System Depressurize and Pressurize (204-05 Vehicle Dynamic Suspension, General Procedures).

4. Disconnect the battery ground cable.
   For additional information, refer to: Specifications (414-00 Charging System - General Information, Specifications).

5. **WARNING:**

   Do not work on or under a vehicle supported only by a jack. Always support the vehicle on safety stands.

   Raise and support the vehicle.

6. Remove the rear wheels and tires.
   For additional information, refer to: Wheel and Tire (204-04 Wheels and Tires, Removal and Installation).

7.

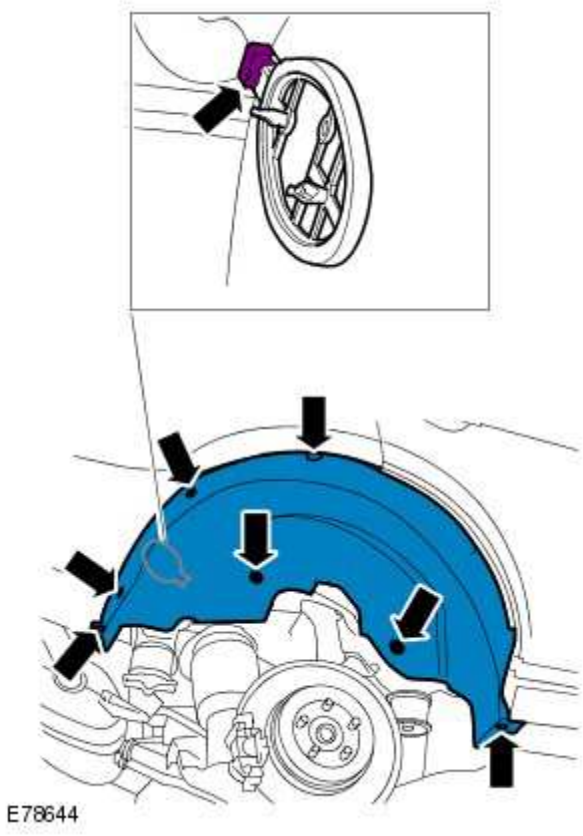

Remove the RH rear fender splash shield.

- Remove the 4 screws.
- Remove the nut.
- Remove the scrivet.
- Remove the clip.
- Disconnect the tire pressure antenna electrical connector.

8.

NOTE:

Note the routing of the parking brake emergency release cable.

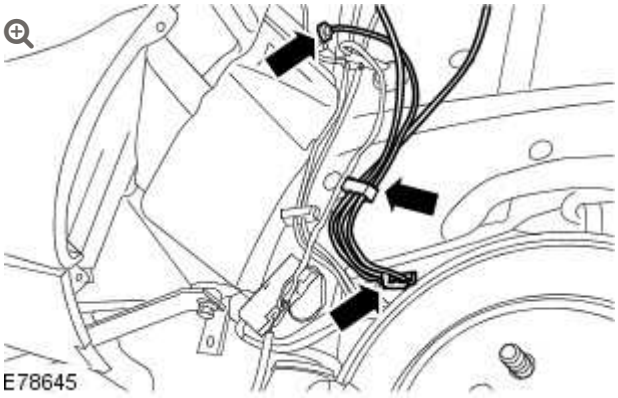

Release the parking brake emergency release cable and rear suspension spring air lines.

- Release the parking brake emergency release cable.
- Release from the 2 clips.

9. Remove the rear brake discs.
   For additional information, refer to: Brake Disc (206-04 Rear Disc Brake, Removal and Installation).

10. **NOTE:**

    Right-hand shown, left-hand similar.

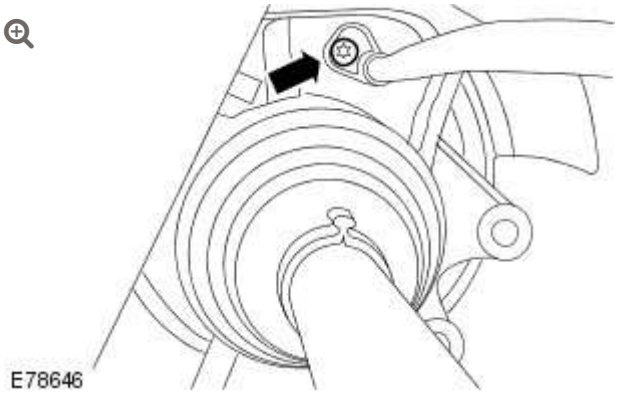

Remove the parking brake cable bolt from the rear wheel knuckle.

11. **NOTE:**

Left-hand shown, right-hand similar.

Release the parking brake cables.

1. Pull the parking brake cable sleeve away from the parking brake shoe expander.
2. Pull the parking brake cable towards the parking brake shoe expander.
3. Release the parking brake cable from the parking brake shoe expander.

12. Remove the exhaust system. For additional information, refer to:
Exhaust System (309-00 Exhaust System - 4.2L, Removal and Installation),
Exhaust System (309-00 Exhaust System - 4.4L, Removal and Installation),
Exhaust System - Vehicles Without: Diesel Particulate Filter (DPF) (309-00 Exhaust System - 3.6L (TdV8) Diesel, Removal and Installation),
Exhaust System - Vehicles With: Diesel Particulate Filter (DPF) (309-00 Exhaust System - 3.6L (TdV8) Diesel, Removal and Installation).

13.

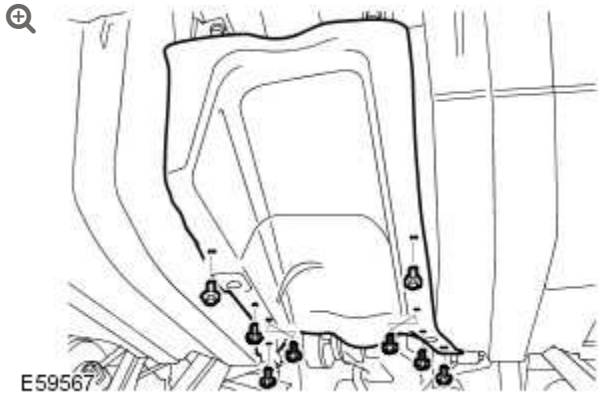

Remove the fuel tank heat shield.

- Remove the 8 screws.

14.

NOTE:

Left-hand shown, right-hand similar.

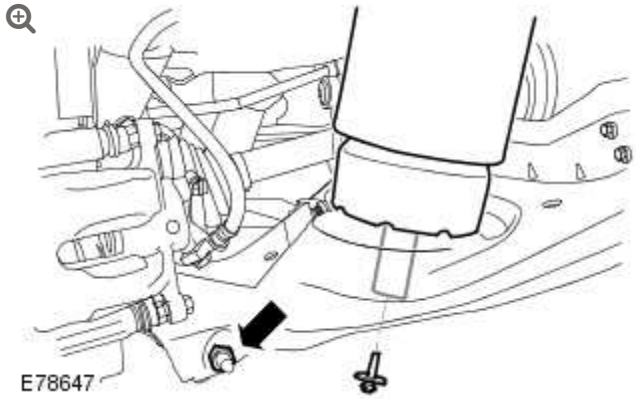

Release the rear air spring from the lower suspension arm.

- Remove the screw.

15.

NOTE:

Left-hand shown, right-hand similar.

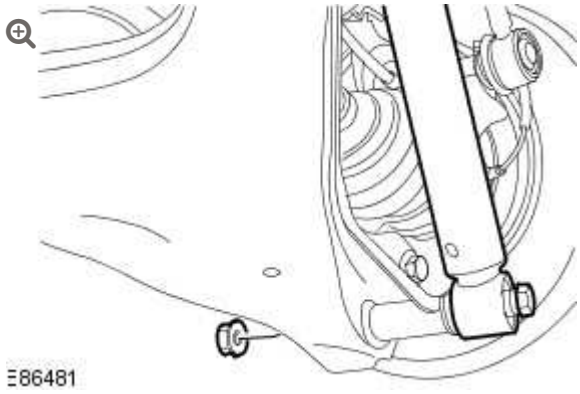

Release the rear shock absorber from the lower suspension arm.

- Remove the bolt and discard the nut.

16.

NOTE:

Right-hand shown, left-hand similar.

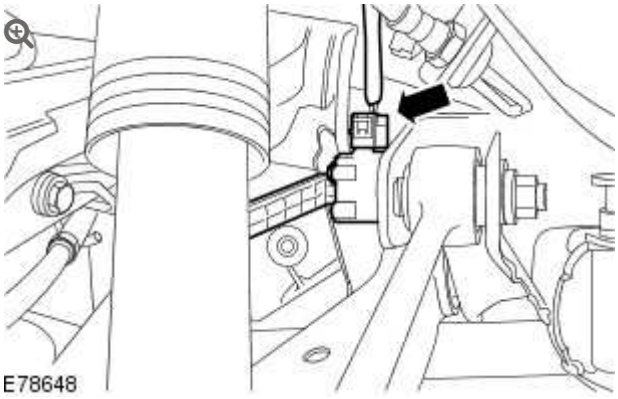

Disconnect both rear suspension height sensor electrical connectors.

17. Using a suitable hydraulic jack, support the rear subframe.

18.

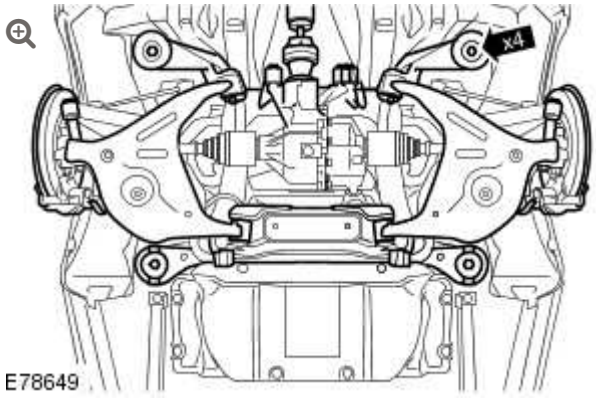

Remove the 4 rear subframe mounting bolts.

19.

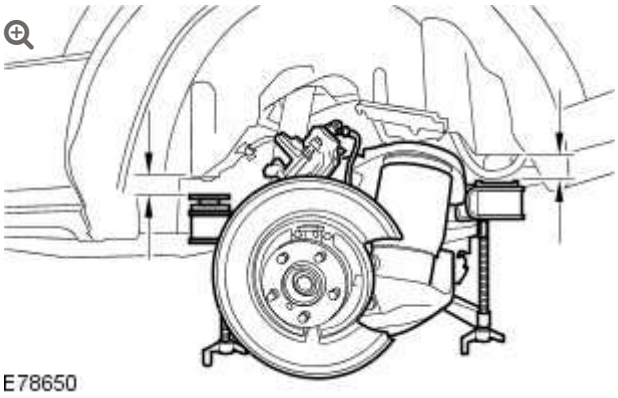

Lower the rear subframe to a maximum of 20 mm (0.78 inches).

20.

NOTE:

Note the routing of the parking brake emergency release cable.

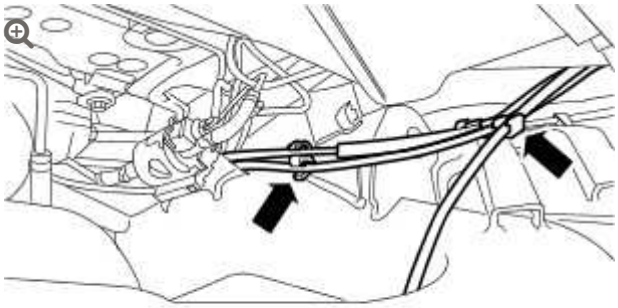

E78651

Release the parking brake emergency release cable and rear suspension spring air lines.

- Release from the 2 clips.

21.

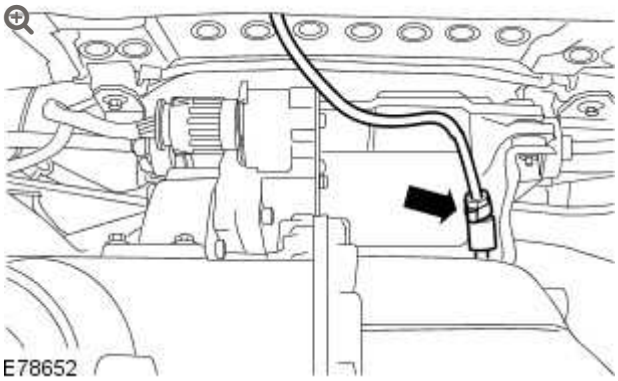

E78652

Disconnect the differential case breather line.

22.

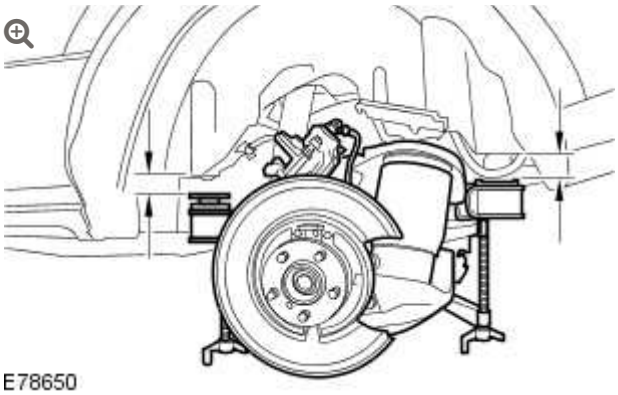

E78650

Lower the rear subframe to a maximum of 40 mm (1.57 inches).

- Collect the spacers from the mountings.

23.

NOTE:

Right-hand shown, left-hand similar.

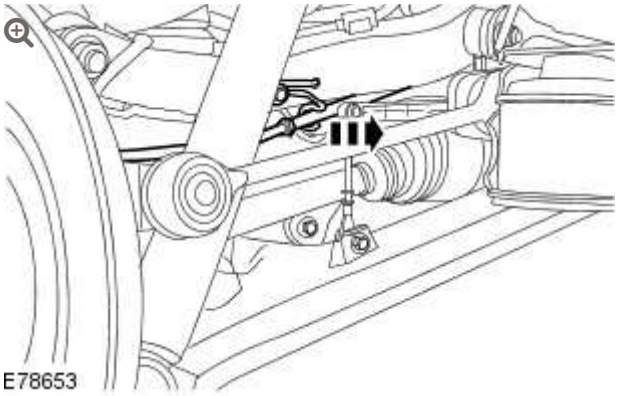

Release the parking brake cable clip from the upper suspension arm.

- Remove the bolt.

24.

NOTE:

Right-hand shown, left-hand similar.

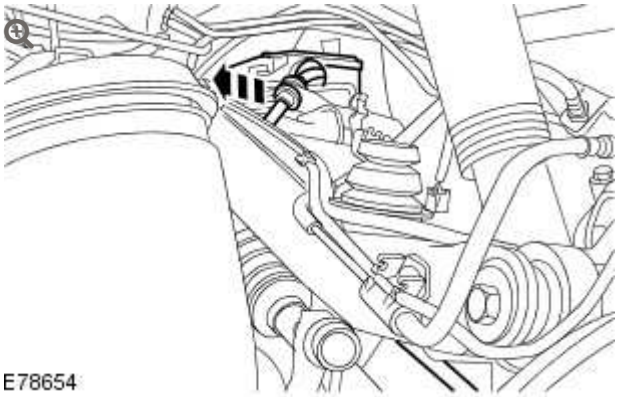

Release the parking brake cable from the rear subframe clip.

25.

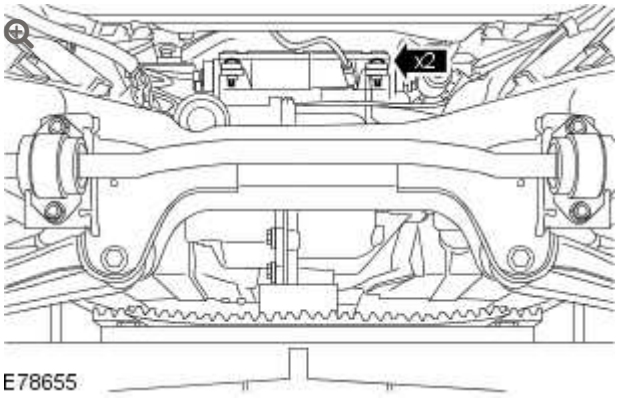

Remove the 2 parking brake actuator bolts.

26.

CAUTIONS:

- Make sure that the area around the component is clean and free of foreign material.
- It is imperative that no damage is caused to the electrical connector or the module.
- Do not touch the electrical connections.

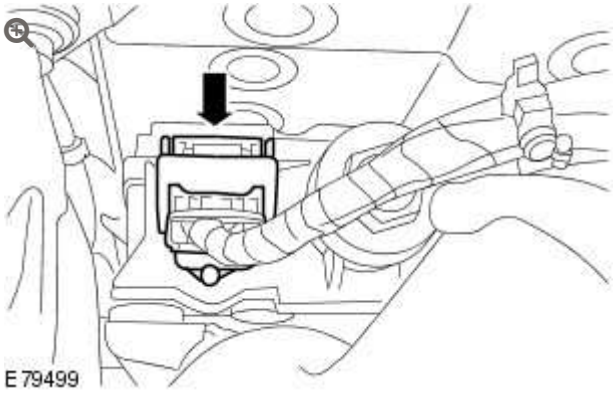

Disconnect the parking brake actuator electrical connector.

27.

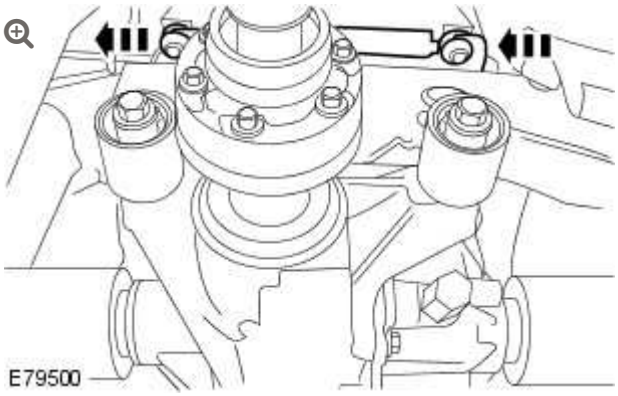

Remove the parking brake actuator and cable assembly.

- Release the 2 front rubber mounts.

INSTALLATION

1. Install the parking brake actuator and cable assembly.
   - Attach the 2 front rubber mounts.
2. **CAUTION:**

   Do not touch the electrical connections.

   Connect the parking brake actuator electrical connector.
3. Install the parking brake actuator bolts and tighten to 9 Nm (7 lb.ft)
4. **NOTE:**

   Right-hand shown, left-hand similar.

   Install the parking brake cable to the rear subframe clip.

5. **NOTE:**

   Right-hand shown, left-hand similar.

   Install the parking brake cable clip to the upper suspension arm.

   - Install the bolt.

6. Connect the differential case breather line.

7. Attach the parking brake emergency release cable and rear suspension spring air lines.

   - Secure in the 2 clips.

8. Raise the rear subframe and locate on the dowels.

   - Install the spacers to the rear subframe mountings.

9. **CAUTION:**

   Make sure that the spacers are correctly located to the bushes prior to tightening.

   Install the 4 rear subframe mounting bolts and tighten to 165 Nm (122 lb.ft)

10. Connect both rear suspension height sensor electrical connectors.

11. **NOTE:**

    Left-hand shown, right-hand similar.

Attach the rear shock absorber to the lower suspension arm.

- Install the screw, but do not fully tighten at this stage.

12. **NOTE:**

Left-hand shown, right-hand similar.

Attach the rear air spring to the suspension lower arm.

- Tighten the screw to 7 Nm. (5 lb.ft).

13. Install the fuel tank heat shield.

- Install the 8 screws.

14. Install the exhaust system. For additional information, refer to:
Exhaust System (309-00 Exhaust System - 4.2L, Removal and Installation),
Exhaust System (309-00 Exhaust System - 4.4L, Removal and Installation),
Exhaust System - Vehicles Without: Diesel Particulate Filter (DPF) (309-00 Exhaust System - 3.6L (TdV8) Diesel, Removal and Installation),
Exhaust System - Vehicles With: Diesel Particulate Filter (DPF) (309-00 Exhaust System - 3.6L (TdV8) Diesel, Removal and Installation).

15. **CAUTION:**

Make sure that the parking brake cable latches correctly into the parking brake shoe expander.

NOTE:

Make sure that the brake cable circlip is positioned as shown.

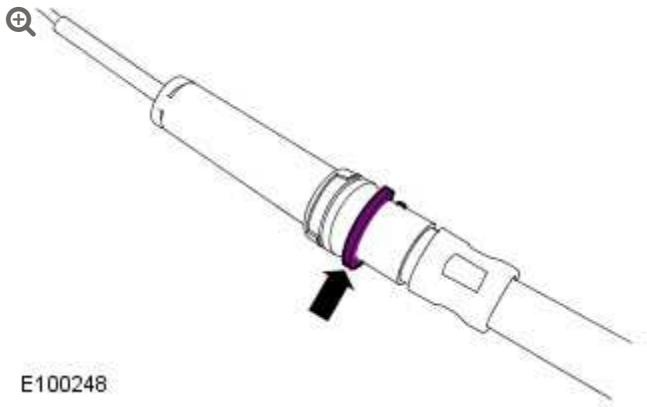

Attach the parking brake cables.

- Push the parking brake cable through the wheel knuckle into the parking brake shoe expander.

16. **NOTE:**

Right-hand shown, left-hand similar.

Install the parking brake cable bolt to the rear wheel knuckle and tighten to 8 Nm (6 lb.ft).

17. Install the rear brake discs.
For additional information, refer to: Brake Disc (206-04 Rear Disc Brake, Removal and Installation).

18. Attach the parking brake emergency release cable and rear suspension spring air lines.

- Secure the 2 clips.

- Install the parking brake emergency release cable.

19. Install the RH rear fender splash shield.
    - Install the clip.
    - Install the scrivet.
    - Install the nut.
    - Install the 4 screws.

20. Install the rear wheels and tires.
    For additional information, refer to: Wheel and Tire (204-04 Wheels and Tires, Removal and Installation).

21. **CAUTION:**

    Nuts and bolts must be tightened with the weight of the vehicle on the suspension.

    Tighten the rear shock absorber lower nuts and bolts to 110 Nm (81 lb.ft).

22. Connect the battery ground cable.
    For additional information, refer to: Specifications (414-00 Charging System - General Information, Specifications).

23. Using the Land Rover approved diagnostic system, read, evaluate and clear any fault codes from the parking brake actuator memory.

24. Using the Land Rover approved diagnostic system, calibrate the parking brake actuator on an even surface.

25. Test the parking brake for correct operation.

2012.0 RANGE ROVER (LM), 206-05

PARKING BRAKE AND ACTUATION

DESCRIPTION AND OPERATION

COMPONENT LOCATION

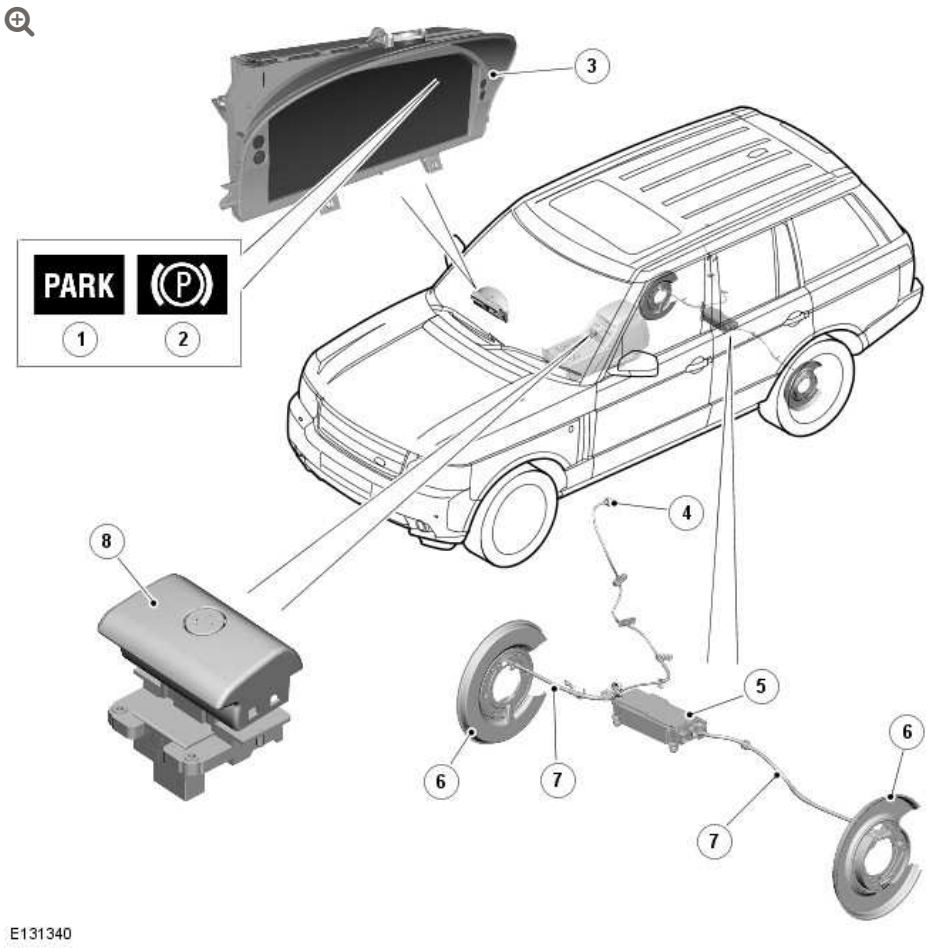

ITEM	DESCRIPTION
1	Parking brake indicator - USA market

ITEM	DESCRIPTION
2	Parking brake indicator - ROW markets
3	Instrument cluster
4	Emergency release cable
5	Parking brake module
6	Dust shield and parking brake shoes
7	Parking brake cable
8	Parking brake switch

OVERVIEW

The parking brake is an electrically actuated system that operates drum brakes integrated into the rear brake discs. The parking brake system consists of:

- A parking brake switch.
- Left and right drum brakes.
- Left and right brake cables.
- An emergency release cable.
- Two parking brake indicators.
- A parking brake module.

The parking brake is operated by the parking brake module, which adjusts the tension of the brake cables to apply and release the drum brakes. Operation of the parking brake module is initiated by the parking brake switch.

PARKING BRAKE SWITCH

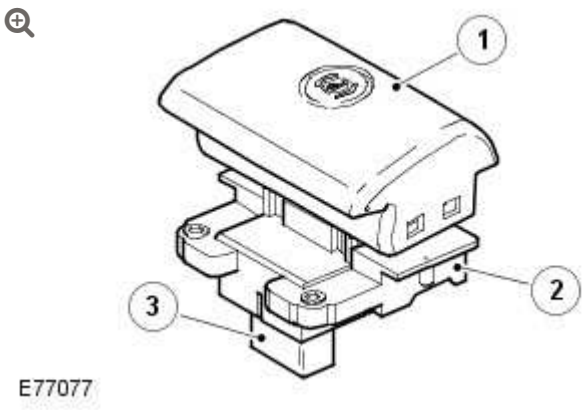

ITEM	DESCRIPTION
1	Operating handle
2	Switch body
3	Electrical connector

The parking brake switch is used by the driver to apply and release the parking brake, and is installed in the center console adjacent to the gear shift lever. An electrical connector on the back of the switch provides the interface with the vehicle wiring. A brake symbol on the switch illuminates when the exterior lamps are selected on.

There are 3 states for the parking brake switch:

- Apply request, when the handle of the parking brake switch is pulled up.
- Release request, when the handle of the parking brake switch is pushed down.
- Idle, when the handle of the parking brake switch is in the central or rest position.

Microswitches, incorporated into the parking brake switch, are activated by the handle of the parking brake switch. To determine

the operating state of the parking brake switch, the parking brake module monitors the activity of the microswitches.

DRUM BRAKES

NOTE:

right-hand (RH) brake shown, left-hand (LH) brake similar

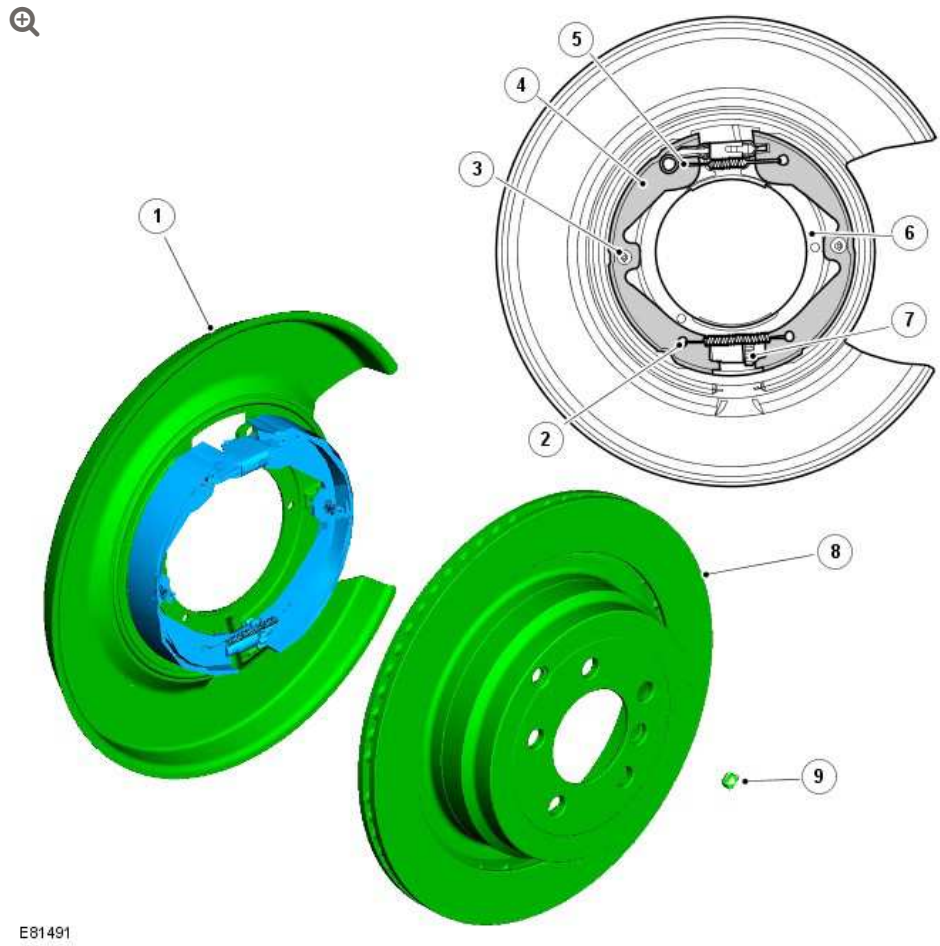

ITEM	DESCRIPTION
1	Dust shield
2	Adjuster spring
3	Shoe locating pin and clip
4	Brake shoe

ITEM	DESCRIPTION
5	Return spring
6	Backplate
7	Toothed wheel adjuster
8	Rear brake disc
9	Adjuster access plug

WARNING:

The parking brake may not switch off until 20 minutes after the ignition is switched off. Automatic re-apply of the parking brake is possible and is not eliminated until this period has expired.

CAUTION:

The parking brake module must be isolated from electrical power before attempting to remove a brake disc from the vehicle. Operation of the parking brake switch while a brake disc is removed may cause the actuating mechanism in the parking brake module to seize.

Each drum brake consists of a pair of brake shoes installed on a backplate attached to the rear hub carrier.

When the parking brake module tensions the brake cables, the movement is transmitted to an expander, which acts on both brake shoes. Brake shoe to drum clearance is set with a manual adjuster, which is accessed through a hole in the brake disc. The adjuster is a conventional toothed wheel adjuster.

After replacement of the brake shoes or brake discs, a bedding in procedure must be performed to ensure the drum brakes operate satisfactorily.
For additional information, refer to: Parking Brake Shoes Bedding-In (206-05, General Procedures).

BRAKE CABLES

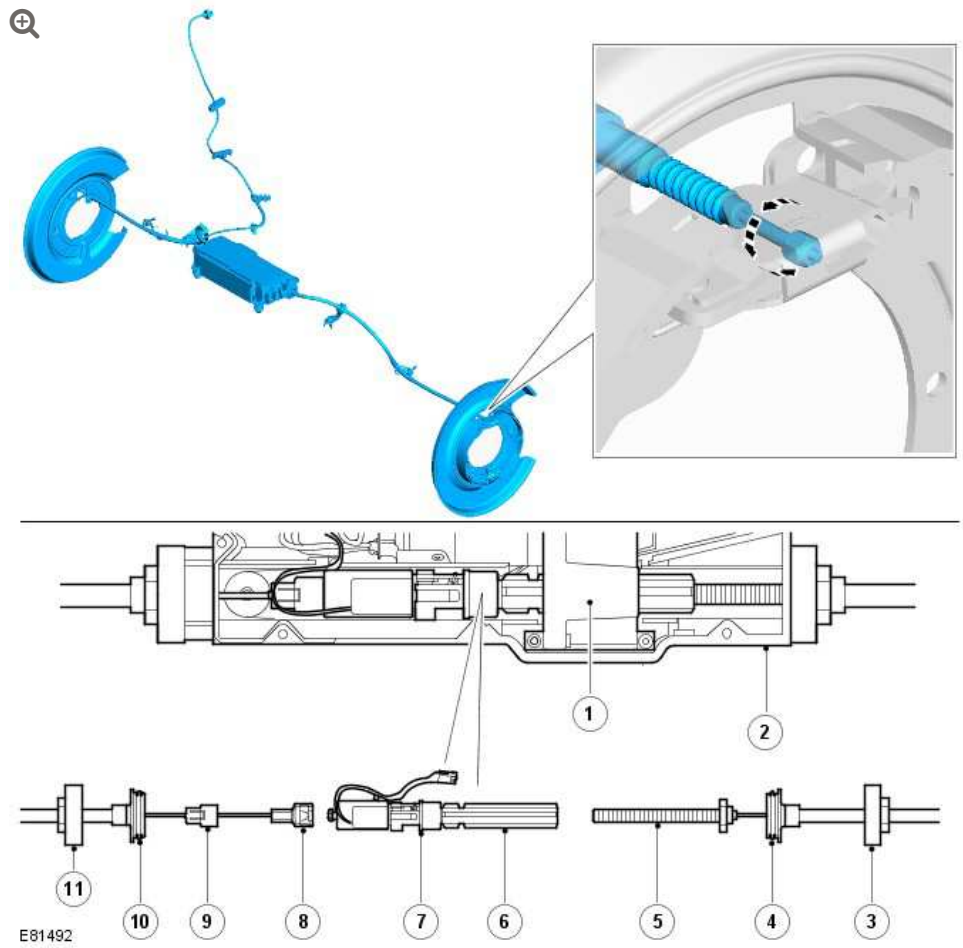

ITEM	DESCRIPTION
1	Gearbox
2	Parking brake module housing
3	Cable nut
4	Sealing collar
5	Threaded connector

ITEM	DESCRIPTION
6	Spline shaft
7	Force sensor
8	Shoe
9	Locking cover
10	Sealing collar
11	Cable nut

WARNING:

The parking brake may not switch off until 20 minutes after the ignition is switched off. Automatic re-apply of the parking brake is possible and is not eliminated until this period has expired.

CAUTION:

The parking brake module must be isolated from electrical power before attempting to remove a brake disc from the vehicle. Operation of the parking brake switch while a brake disc is removed may cause the actuating mechanism in the parking brake module to seize.

The brake cables consist of Bowden cables installed between the parking brake module and the drum brakes. The outer cable is attached to the respective wheel knuckle with a screw. The inner cable attaches to the expander and is secured in position with a nipple. In the parking brake module, the two inner cables are joined together via the force sensor and the spline shaft.

The inner cable of the RH brake cable is connected to a nipple on the force sensor by a 'shoe' on the end of the cable; a locking cover keeps the shoe engaged with the nipple.

The inner cable of the LH brake cable is connected to the spline shaft by a threaded connector (LH thread); a squared flange at the end of the threaded connector locates in the housing of the parking brake module, to prevent the threaded connector from turning with the spline shaft.

When the spline shaft turns, the threaded connector of the LH brake cable is screwed into or out of the spline shaft, which changes the effective length of the inner cables and operates the drum brakes. The ability of the spline shaft to move axially in the gearbox equalizes the load applied by the inner cables to the two drum brakes.

EMERGENCY RELEASE CABLE

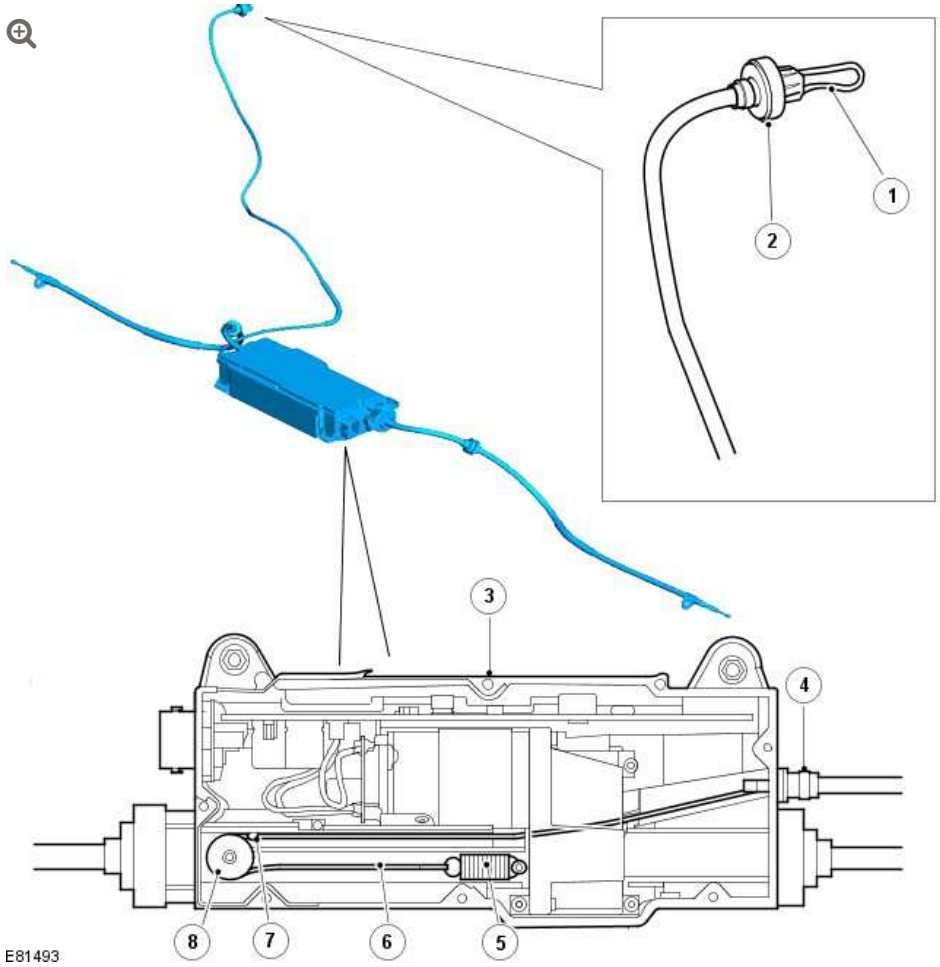

ITEM	DESCRIPTION
1	Pull ring
2	Quick release fitting
3	Parking brake module
4	Sealing collar
5	Spring
6	Inner cable
7	Nipple
8	Pulley wheel

The emergency release cable allows the parking brake to be mechanically released in the event that:

- The parking brake is not able to be electrically released due to a system fault.
- The battery is disconnected or battery voltage decreases below 7.5 volts while the parking brake is applied, preventing electrical release of the parking brake.

The parking brake is mechanically released by disconnecting the force sensor from the spline shaft in the parking brake module. During normal operation, the force sensor and the spline shaft are locked together by a lever operated pawl on the end of the spline shaft, which engages with a spigot on the force sensor.

The emergency release cable is a Bowden cable installed between the parking brake module and the luggage compartment. In the luggage compartment, a pull ring is installed on the end of the inner cable. The pull ring is designed to fit the hook on the end of the jack handle , and when used in combination with a screwdriver shaft, can be used to pull on the cable.

The pull required to release the latch is approximately 200 N (45 lbf). When the pull ring of the emergency release cable is released, the spring in the parking brake module retracts the inner cable and the nipple moves away from the pawl operating lever.

After the emergency release cable has been used to release the parking brake, the next time an apply selection is made with the parking brake switch, the parking brake module automatically runs through a latching procedure to reconnect the spline shaft with the force sensor. The parking brake module turns the spline shaft so that it moves towards the force sensor. The pawl of the spline shaft then re-engages with the spigot of the force sensor. A second apply

selection with the parking brake switch is required to apply the parking brake.

PARKING BRAKE INDICATORS



E131341

ITEM	DESCRIPTION
1	Parking brake indicator - USA market
2	Parking brake indicator - ROW markets

The parking brake indicator illuminates red when the brake has been correctly applied.

If a fault is detected the warning lamp will flash red or illuminate yellow continuously and a 'PARKBRAKE' message will be displayed in the message center.For additional information, refer to:

Instrument Cluster (413-01, Description and Operation), Information and Message Center (413-08, Description and Operation).

NOTE:

The red brake warning indicator will continue to be illuminated for at least ten seconds after the ignition has been turned off.

PARKING BRAKE MODULE

The parking brake module monitors external and internal inputs and adjusts the tension of the brake cables to operate the drum brakes.

The parking brake module is installed directly on the rear subframe. Two rubber mounts, installed on lugs on the underside of the parking brake module, locate in holes in the subframe. The remaining corners of the parking brake module are secured to the subframe with shoulder bolts.

The main components of the parking brake module are:

- A PCB (printed circuit board) incorporating the ASIC (application specific integrated circuit) for control of the parking brake.
- An electric motor.
- A gearbox.
- A splined shaft.
- A force sensor.

The splined shaft and the force sensor are connected together by a latch on the end of the splined shaft. The splined shaft rotates on the latch and moves axially in the gearbox. The latch and the force sensor slide in a channel in the body of the parking brake module.

To apply or release the drum brakes, the parking brake module controls the operation of the electric motor to drive the gearbox. The gearbox rotates the splined shaft to increase or decrease the tension in the brake cables. The parking brake module monitors the load exerted by the brake cables using the input from the force sensor.

Interior of Parking Brake Module

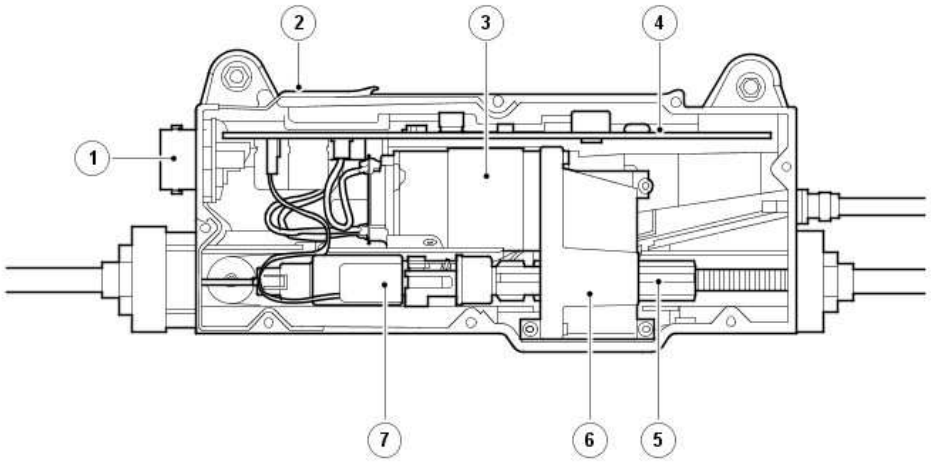

E81494

ITEM	DESCRIPTION
1	Electrical connector
2	Housing
3	Electric motor
4	PCB
5	Splined shaft
6	Gearbox
7	Force sensor

INPUTS AND OUTPUTS

A 32 pin electrical connector on the RH side of the parking brake module provides the interface between the PCB and the vehicle wiring.

The parking brake module is powered by two permanent battery power feeds from the auxiliary junction box (AJB). A third connection with the central junction box (CJB) provides a battery voltage signal when the ignition switch is in position II (ignition). Other hardwired inputs include those from the parking brake switch.

In addition to the hardwired connections, the parking brake module is connected to the high speed controller area network (CAN) bus to enable communication with other vehicle systems.

CONTROL DIAGRAM

NOTE:

A = Hardwired connection; **D** = High speed CAN bus; **N** = Medium speed CAN (controller area network) bus.

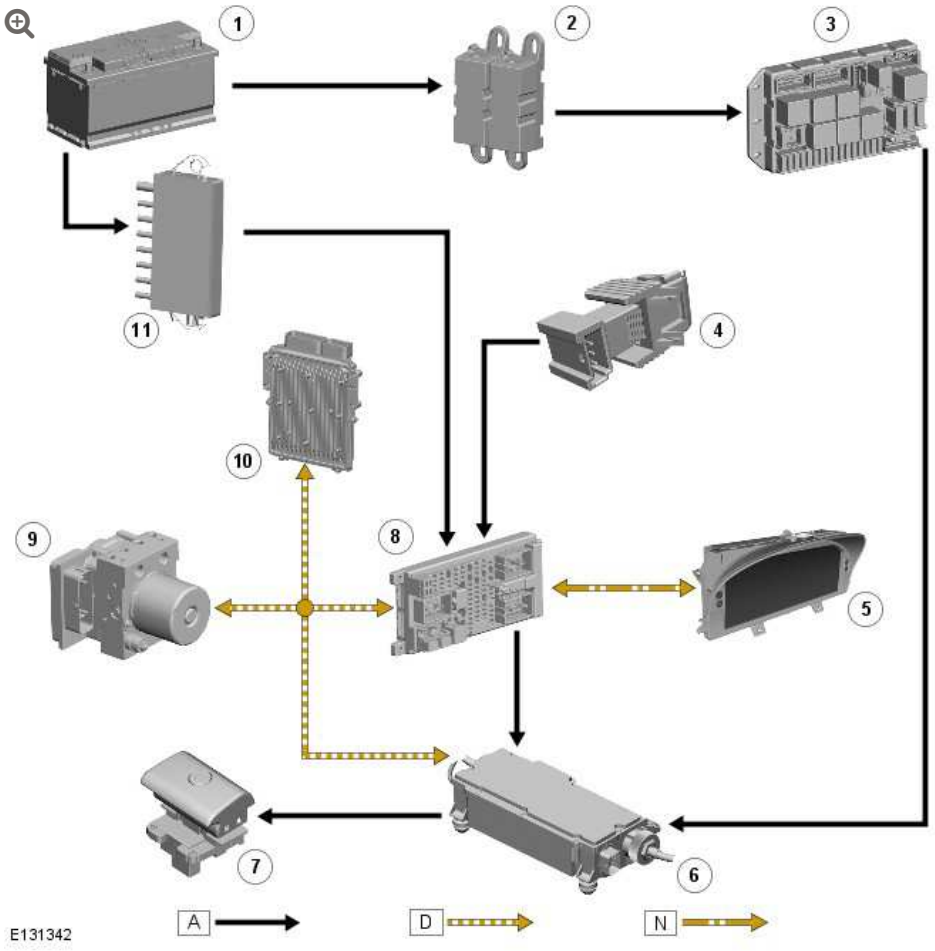

ITEM	DESCRIPTION
1	Battery
2	BJB (battery junction box) - 2

ITEM	DESCRIPTION
3	RJB (rear junction box)
4	Brake pedal switch
5	Instrument cluster
6	Parking brake module
7	Parking brake switch
8	CJB (central junction box)
9	anti-lock brake system (ABS) module
10	ECM (engine control module)
11	BJB

PRINCIPLES OF OPERATION

The parking brake can be applied at any time provided sufficient battery power is available. For the parking brake to be released, various pre-conditions are required. The parking brake has manual and automatic actuating modes, to cater for different operating circumstances, as detailed in the following table:

Actuating Modes

MODE	PRE-CONDITIONS	DRIVER ACTION
Static apply	Vehicle speed less than 2.5 km/h (1.6 mph).	Pull up parking brake switch.
Static release	1. Vehicle speed less than 2.5 km/h (1.6 mph). 2. Engine running. **OR** Ignition switch in position II and brake pedal or accelerator pedal pressed.	Press down parking brake switch.
Dynamic apply	Vehicle speed more than 2.5 km/h (1.6 mph).	Pull up parking brake switch as required.

MODE	PRE-CONDITIONS	DRIVER ACTION
Dynamic release	Vehicle speed more than 2.5 km/h (1.6 mph).	Release (to neutral position) or press down parking brake switch.
DAR (drive away release)	1. Ignition switch in position II. 2. Transmission in gear 1, 2 or R (with high range selected) or 1, 2, 3 or R (with low range selected). 3. Accelerator pedal pressed more than 5%.	None. Parking brake released automatically on drive away.

OPERATING VOLTAGES

Actuation of the parking brake (apply or release) is only started if the power supply to the parking brake module is within 9 to 18 volts. At any voltage in this range, the parking brake module is able to tighten the brake cables to the maximum, to fully apply the parking brake, although at voltages between 9 and 10.5 volts the actuation time may exceed 1.0 second.

During a parking brake actuation:

- If the power supply to the parking brake module decreases to less than 8.3 volts, the parking brake module continues the actuation, but stores a related diagnostic trouble code (DTC). If the ignition is on, the parking brake module also signals the instrument cluster to illuminate the amber parking brake warning indicator and flash the red parking brake warning indicator. On the instrument cluster, a message advising there is a parking brake fault is shown in the message center. The warning indications are discontinued if the power supply voltage increases to 8.3 volts or more.
- If the power supply voltage decreases to less than 7.5 volts, the parking brake module discontinues the actuation. Actuation is automatically resumed if the power supply voltage subsequently increases to 7.5 volts or more and the parking brake switch request is still valid.

- If the power supply voltage decreases below 6.5 volts, the parking brake function is disabled for the remainder of the ignition cycle.
- If the power supply voltage increases to more than 18.0 volts, the parking brake module immediately disables the parking brake function and stores a related DTC. If the ignition is on, the parking brake module also signals the instrument cluster to illuminate the amber parking brake warning indicator and flash the red parking brake warning indicator. On the instrument cluster, a message advising that the parking brake has a fault and is not functioning is shown in the message center. The parking brake function remains disabled until the power supply voltage is within 9 to 18 volts again. When the power supply voltage is within 9 to 18 volts again, the warning indications are cancelled and actuation is automatically resumed if the parking brake module is in a dynamic mode of operation with a valid parking brake switch request.

NOTE:

The instrument cluster shuts down below 8 volts, so warning indications and messages are not displayed below 8 volts. CAN transmission stops if battery voltage drops below 7.0 volts and re-starts when voltage goes above 7.5 volts.

SLEEP MODE

To reduce quiescent drain on the vehicle battery, the parking brake module incorporates a sleep mode. The parking brake module enters the sleep mode, provided the ignition is off and there are no signals from the wheel speed sensors, when one of the following occurs:

- 20 minutes elapse after the last actuation of the parking brake.
- If no actuation occurred, 20 minutes elapse after the ignition is switched off.

The parking brake module wakes up from the sleep mode when one of the following occurs:

- An apply or release request is made with the parking brake switch.
- The ignition is turned on.

The parking brake module wakes up within 500 ms. The high speed CAN bus is activated within 200 ms maximum.

When the parking brake module is woken with a release request from the parking brake switch, the parking brake module ignores the request but illuminates the red brake warning indicator. The parking brake module extinguishes the red brake warning indicator and goes back to sleep immediately the switch is released to the neutral position.

When the parking brake module is woken with an apply request from the parking brake switch, if the parking brake is already applied the parking brake module ignores the request but illuminates the red brake warning indicator. The parking brake module extinguishes the red brake warning indicator and goes back to sleep immediately the switch is released to the neutral position. If the parking brake is in the released condition when the apply request is made, the parking brake module illuminates the red brake warning indicator and applies the parking brake. The parking brake module extinguishes the red brake warning indicator and goes back to sleep 3 minutes after the apply activation, or immediately after the switch is released to the neutral position, whichever occurs first.

DYNAMIC APPLY

In the dynamic apply mode, if the vehicle speed is more than 10 km/h (6.25 mph) when the parking brake switch is selected to apply, the parking brake module requests the ABS module to activate the disc brakes on all four wheels. When the vehicle comes to a standstill, the parking brake module statically applies the parking

brake. Once the static load is achieved, the hydraulic pressure is removed. If the parking brake switch is released to the neutral position, or pressed down to the release position, during dynamic apply, braking is cancelled.

The ABS module monitors the deceleration rate using the wheel speed sensor signals, and adjusts the hydraulic pressure to the disc brakes as required to achieve the required rate. All of the anti-lock control - traction control system brake functions remain enabled in the dynamic apply mode.

The parking brake module incorporates two fallback functions for the dynamic apply mode:

- Fallback 1 is invoked if vehicle speed is between 2.5 km/h (1.25 mph) and V_{max} when the parking brake switch is selected to apply and the ABS module is unable to fulfil a hydraulic request. When fallback 1 is invoked, the parking brake module decelerates the vehicle using only the parking brake. The parking brake module monitors the deceleration rate using the wheel speed information from the ABS module, and adjusts the tension of the brake cables to achieve the required rate. During deceleration the parking brake module also uses the wheel speed inputs from the ABS module to operate an anti-lock function for the rear wheels. When vehicle speed decreases to 2.5 km/h (1.25 mph) the parking brake module changes to the static apply mode.
- Fallback 2 is invoked if the ABS module fails. In this instance the parking brake module monitors the output shaft speed sensor on the transmission to determine if a static or dynamic condition exists.
- Fallback 3 is invoked if there is a loss of communication between the parking brake module and the CAN bus has failed. When fallback 3 is invoked, the parking brake module decelerates the vehicle using only the parking brake. The parking brake module

tightens the brake cables under the control of the driver, no anti-lock function is available.

While dynamic apply is active, including fallback 1, 2 and fallback 3, the parking brake module also outputs high speed CAN bus signals to:

- The ABS module, to apply the stop lamps.
- The instrument cluster, to sound an intermittent warning buzzer, at 0.5 second on, 1.0 second off.
- The instrument cluster, to illuminate the red parking brake warning indicator. The indicator is permanently illuminated except in fallback 3, when it flashes.

DAR PRE-ARMING

The DAR pre-arming function operates when the transfer box is in high range to reduce the parking brake release time during DAR and to provide a smooth take-off. DAR pre-arming is invoked when:

- The ignition switch is in position II.
- The transmission is in gear 1, 2 or R.
- The vehicle is stationary.
- No failsafe tighten actuation has occurred.

AUTOMATIC LOAD ADJUSTMENT

While the ignition is on, the parking brake module constantly monitors the input from the force sensor. If the tension of the brake cables goes outside the limits for a given operating mode, the parking brake module automatically restores the tension within limits.

Failsafe Tighten. If, during DAR pre-arming, the vehicle moves, then the maximum cable force is reinstated for the remainder of that ignition cycle.

Automatic Apply. While the parking brake is applied, if the tension of the brake cables decreases by a prescribed amount from the initial setting, the parking brake module automatically restores the tension to the initial setting.

Automatic Release. While the parking brake is released, if the tension of the brake cables increase to a prescribed amount, the parking brake module automatically reduces the tension to zero.

PARKING BRAKE SWITCH MONITORING

The parking brake module monitors for the following types of fault in the parking brake switch system:

- Short circuits between a pull-down transistor in the parking brake module and battery voltage.
- Broken wires and microswitches.
- Plausibility.

If a fault is detected, the parking brake module stores a related fault code.

The parking brake switch has a degree of in-built redundancy. If a single microswitch fault is detected the parking brake module can still determine the operating state of the parking brake switch. Short circuits or multiple failures cause the parking brake module to disable the parking brake switch for the remainder of the ignition cycle. The parking brake module also disables the parking brake switch if a plausibility fault occurs. However, since plausibility faults are usually caused by incomplete operation of the parking brake switch, the parking brake switch is re-enabled if the parking brake module subsequently establishes a plausible operating state.

If a single microswitch fault is detected, the parking brake module signals the instrument cluster to illuminate the amber parking brake warning indicator. The parking brake module also signals the

instrument cluster to display a message advising there is a parking brake fault. During an apply actuation, the parking brake module also signals the instrument cluster to flash the red parking brake warning indicator.

For all other fault types, the parking brake module signals the instrument cluster to illuminate the amber parking brake warning indicator and to display a message advising the parking brake has a fault and is not functioning. If it makes an apply actuation, the parking brake module signals the instrument cluster to flash the red parking brake warning indicator for the remainder of the ignition cycle.

On the next ignition cycle, the warning indicators and the messages are only activated if the fault is still present, although the DTC is retained by the parking brake module until cleared by the Land Rover approved diagnostic system.

PARKING BRAKE CABLE LH (G850438)

REMOVAL AND INSTALLATION

REMOVAL

CAUTIONS:

- It is essential that absolute cleanliness is observed when working on the parking brake actuator. Always cover any open orifices using lint free non-flocking material to prevent the ingress of foreign matter. Failure to follow this instruction may result damage to the components.
- The parking brake actuator fault memory must not be erased.

NOTES:

- If the parking brake system has completed less than 50,000 cycles it is permissible to replace the parking brake cables. If over 50,000 cycles have been completed, then the parking brake cables can only replaced as part of the parking brake actuator and cable assembly. The parking brake cycle count can be checked using the Land Rover approved diagnostic system, (ON/OFF = 1 cycle). If a parking brake cable becomes detached whilst the vehicle is being driven, a 'parking brake actuator unblocking procedure' may be required using the Land Rover approved diagnostic system. If a parking brake cable breaks then the complete parking brake actuator and cable assembly should be replaced.
- It is not necessary to carry out the parking brake shoe 'bedding-in procedure' if the rear brake discs or parking brake shoes have been removed for access to other components.

1. Using the Land Rover approved diagnostic system, drive the parking brake to the mounting position.

2. **WARNING:**

   Do not work on or under a vehicle supported only by a jack. Always support the vehicle on safety stands.

   Raise and support the vehicle.

3. Disconnect the battery ground cable.
   For additional information, refer to: Specifications (414-00, Specifications).

4. Remove the rear wheels and tires.

5. **NOTE:**

   The thread is left handed.

   Remove the RH parking brake cable.
   For additional information, refer to: Parking Brake Cable RH (206-05, Removal and Installation).

6. **CAUTIONS:**

   - Make sure that the area around the component is clean and free of foreign material.
   - Make sure that no dirt or moisture enters the parking brake actuator during parking brake cable replacement.
   - It is imperative that no damage is caused to the electrical connector or the module.
   - Do not touch the electrical connections.

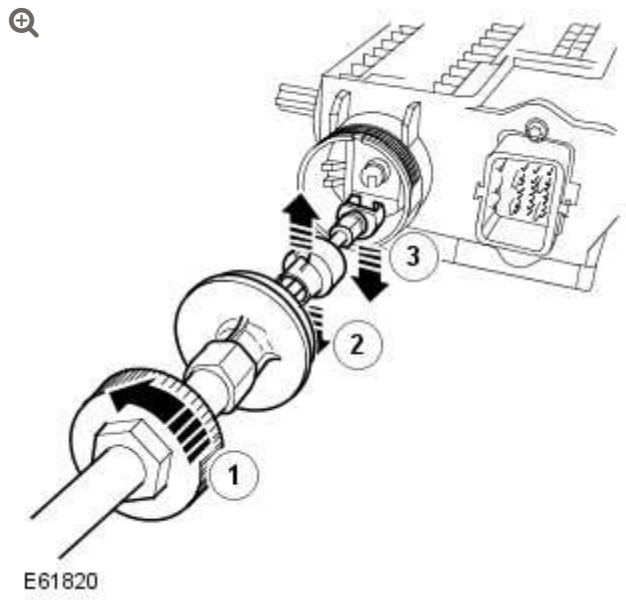

Remove the LH parking brake cable.

- Release the nut.
- Release the parking brake cable clip.
- Release and remove the parking brake cable.

INSTALLATION

1. Install the LH parking brake cable.
   - Attach the parking brake cable.
   - Install the parking brake cable clip.
   - Tighten the nut to 6 Nm (4 lb.ft).
2. Install the RH parking brake cable.
   For additional information, refer to: Parking Brake Cable RH (206-05, Removal and Installation).
3. Install the rear wheels and tires.
   - Tighten nuts to 140 Nm (103 lb.ft).

4. Connect the battery ground cable.
   For additional information, refer to: Specifications (414-00, Specifications).

5. **CAUTION:**

   The parking brake actuator fault memory must not be erased.

   Test the parking brake for correct operation.

PARKING BRAKE AND ACTUATION

PARKING BRAKE CABLE RH (G850439)

REMOVAL AND INSTALLATION

REMOVAL

CAUTIONS:

- It is essential that absolute cleanliness is observed when working on the parking brake actuator. Always cover any open orifices using lint free non-flocking material to prevent the ingress of foreign matter. Failure to follow this instruction may result damage to the components.
- The parking brake actuator fault memory must not be erased.

NOTES:

- If the parking brake system has completed less than 50,000 cycles it is permissible to replace the parking brake cables. If over 50,000 cycles have been completed, then the parking brake cables can only replaced as part of the parking brake actuator and cable assembly. The parking brake cycle count can be checked using the Land Rover approved diagnostic system, (ON/OFF = 1 cycle). If a parking brake cable becomes detached whilst the vehicle is being driven, a 'parking brake actuator unblocking procedure' may be required using the Land Rover approved diagnostic system. If a parking brake cable breaks then the complete parking brake actuator and cable assembly should be replaced.
- It is not necessary to carry out the parking brake shoe 'bedding-in procedure' if the rear brake discs or parking brake shoes have been removed for access to other components.

1. Using the Land Rover approved diagnostic system, drive the parking brake to the mounting position.

2. **WARNING:**

   Do not work on or under a vehicle supported only by a jack. Always support the vehicle on safety stands.

   Raise and support the vehicle.

3. Disconnect the battery ground cable.
   For additional information, refer to: Specifications (414-00, Specifications).

4. Remove the rear wheels and tires.

5. Remove the parking brake actuator and cable assembly.
   For additional information, refer to: Parking Brake Actuator - 3.6L (TdV8) Diesel (206-05, Removal and Installation).

6. **CAUTIONS:**

   - Make sure that the area around the component is clean and free of foreign material.
   - Make sure that no dirt or moisture enters the parking brake actuator during parking brake cable replacement.
   - It is imperative that no damage is caused to the electrical connector or the module.
   - Do not touch the electrical connections.

   NOTE:

   The thread is left handed.

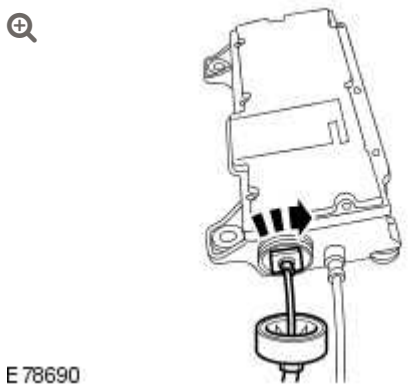

Remove the RH parking brake cable.

- Release the nut.

- Release and remove the parking brake cable.

INSTALLATION

1. **NOTE:**

   Apply a suitable amount of the supplied grease to the RH parking brake cable threads.

   Install the RH parking brake cable.

   - Screw the parking brake cable in 5 complete turns.
   - Tighten the nut to 6 Nm (4 lb.ft).

2. Install the parking brake actuator and cable assembly.
   For additional information, refer to: Parking Brake Actuator - 3.6L (TdV8) Diesel (206-05, Removal and Installation).

3. Install the rear wheels and tires.

   - Tighten nuts to 140 Nm (103 lb.ft).

4. Connect the battery ground cable.
   For additional information, refer to: Specifications (414-00, Specifications).

5. **CAUTION:**

   The parking brake actuator fault memory must not be erased.

   Test the parking brake for correct operation.

PARKING BRAKE AND ACTUATION

PARKING BRAKE SHOE AND LINING ADJUSTMENT

(G899412)

GENERAL PROCEDURES

70.40.11	SHOES - PARKING BRAKE - ADJUST	ALL DERIVATIVES	0.4	USED WITHINS

1. Check operation of the electronic parking brake.

2. Release the electronic parking brake.
   - Press the brake pedal and press the parking brake switch down to release the parking brake. Check that the warning light goes out.
   - Turn the ignition key to position '0' and remove the key.

3. **WARNING:**

   Do not work on or under a vehicle supported only by a jack. Always support the vehicle on safety stands.

Raise and support the vehicle.

4. Remove the rear wheels and tires.

5. Remove the parking brake shoe adjuster access plugs.

6. **NOTE:**

   Rotate the rear brake disc to locate the parking brake shoe adjuster.

   Rotate the parking brake shoe adjuster until resistance is felt and the rear brake disc will not rotate.

   - Apply and release the parking brake several times to centralize the parking brake shoes, re-adjust if required.

7. **NOTE:**

   Rotating the parking brake shoe adjuster backwards will move the parking brake shoes away from the parking brake drum.

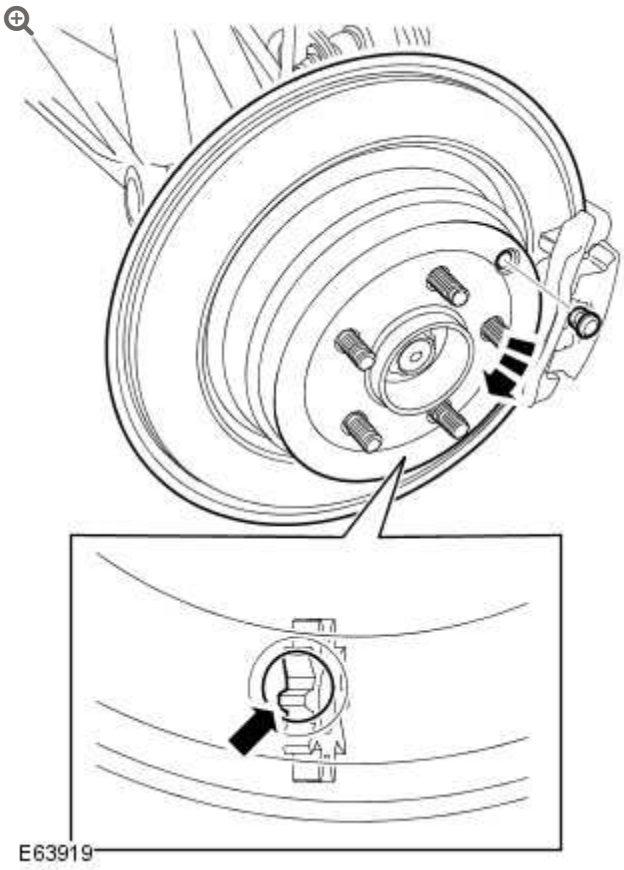

Rotate the parking brake shoe adjuster back 8 clicks.

8. Repeat the above procedure for the other side.

9. Install the parking brake shoe adjuster access plugs.

10. Install the rear wheels and tires.
    - Tighten the wheel nuts to 140 Nm (103 lb.ft).

11. **CAUTION:**

    The parking brake shoe bedding-in procedure must be carried out if new parking brake shoes or new rear brake discs are installed.

NOTE:

It is not necessary to carry out the parking brake shoe bedding-in procedure if the parking brake shoes have been removed for access to other components.

If necessary, carry out the parking brake shoe bedding-in procedure.
For additional information, refer to: Parking Brake Shoes Bedding-In (206-05, General Procedures).

PARKING BRAKE AND ACTUATION

PARKING BRAKE SHOES

(G1226173)

REMOVAL AND INSTALLATION

70.40.09	SHOES - REAR SET - RENEW	ALL DERIVATIVES	1.6	USED WITHINS	+

REMOVAL

CAUTION:

LH illustration shown, RH is similar.

NOTE:

If the parking brake shoes or the brake discs have been removed for access to other components then DO NOT carry out the bedding in procedure.

1. Using the Land Rover approved diagnostic system, drive the parking brake to the 'mounting position'.

2. Disconnect the battery ground cable.
   For additional information, refer to: Specifications (414-00, Specifications).

3. **WARNING:**

   Make sure to support the vehicle with axle stands.

   Raise and support the vehicle.

4. Remove the rear wheels and tires

5. **CAUTION:**

   Do not allow the brake caliper to hang on the brake hose.

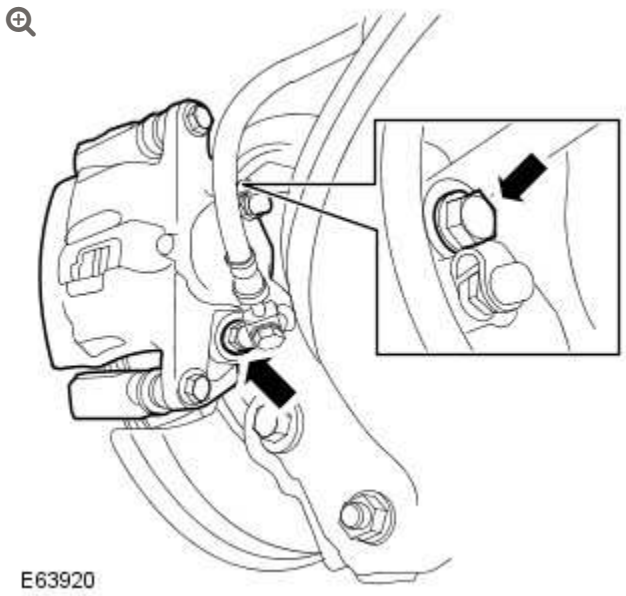

Remove and discard the 2 bolts.

- Tie the brake caliper aside.

6.

NOTE:

Rotate the rear brake disc to locate the parking brake shoe adjuster.

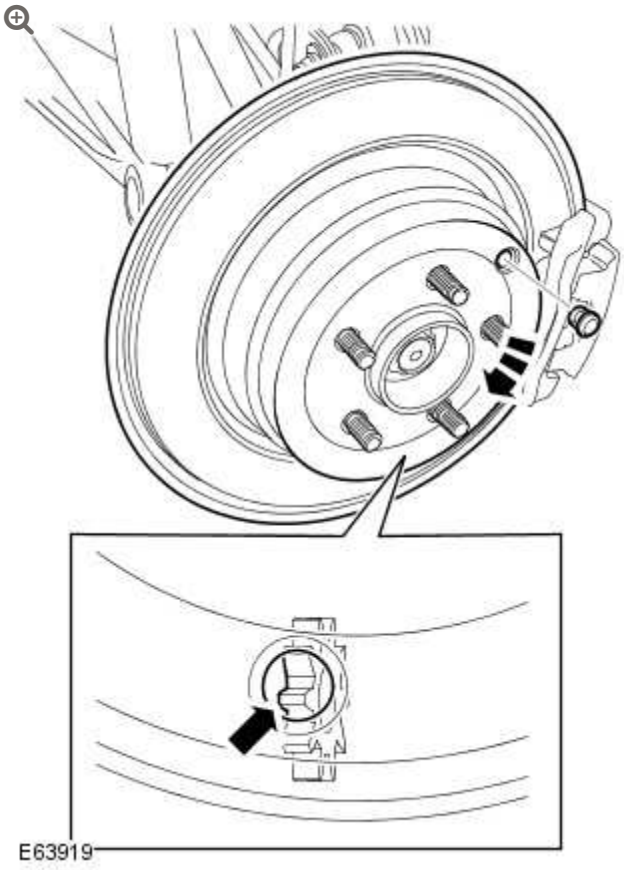

Release the parking brake shoe adjustment.

- Remove the parking brake shoe adjuster access plug.
- Release the the parking brake shoe adjuster to the minimum adjustment.

7.

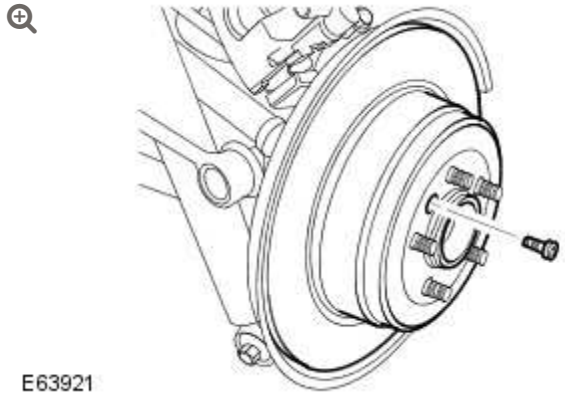

Remove the rear brake disc.

- Remove the Allen screw.

8.

NOTE:

Rotate the parking brake shoe retainers through 90 degrees to release them from the back plate.

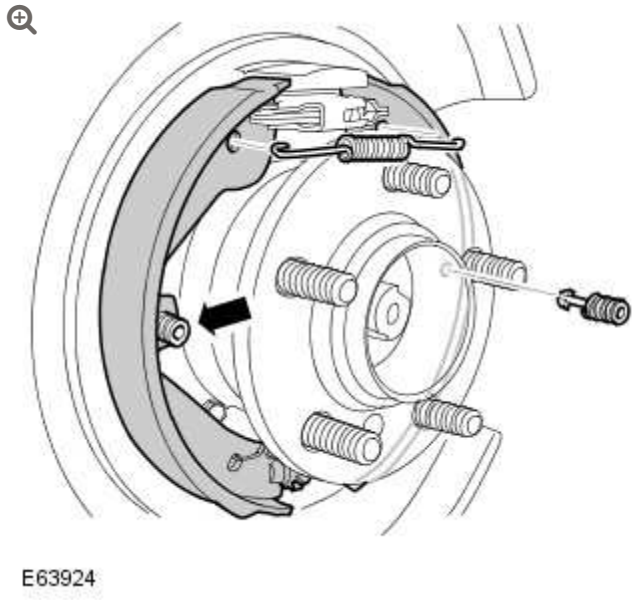

Remove the parking brake shoes as an assembly with the parking brake shoe lower spring and the parking brake shoe adjuster.

- Remove both parking brake shoe retainers.

- Remove the parking brake shoe upper return spring.

9. 

Remove the parking brake shoe adjuster.

- Remove the parking brake shoe lower return spring.
- Remove the parking brake shoes.

10. 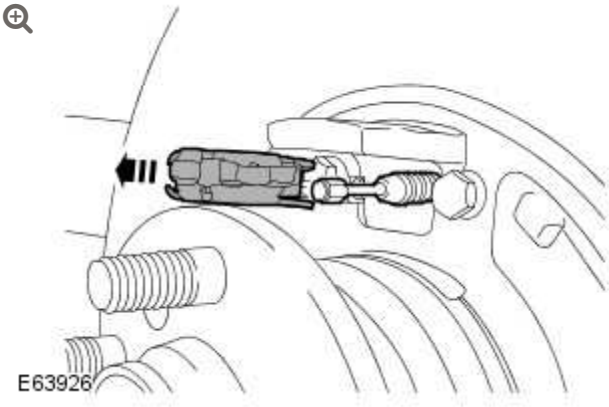

Remove the parking brake shoe expander.

11. Repeat the above procedure for the other side.

INSTALLATION

1.

WARNING:

Do not use compressed air to clean brake components. Dust from friction materials can be harmful if inhaled.

Install the parking brake shoe expander.

- Clean the component mating faces.

2.

NOTE:

Apply grease of the correct specification sparingly to the adjuster threads.

Install the parking brake shoe adjuster.

- Clean the adjuster and set it to its minimum extension.
- Install the parking brake shoe lower return spring.
- Assemble the parking brake shoes.

3. Install the parking brake shoes.
   - Clean the component mating faces.
   - Install both parking brake shoe retainers.
   - Install the parking brake shoe upper return spring.

4.

CAUTION:

Brake discs must be renewed in pairs.

Install the rear brake disc.

- Make sure that the rear brake disc and hub mating surfaces are clean.
- Tighten the Allen screw to 16 Nm (12 lb.ft).

5. Install the brake caliper.
   - Clean the component mating faces.
   - Tighten the new bolts to 65 Nm (48 lb.ft), then a further 90 degrees.

6. Repeat the above procedure for the other side.

7. Adjust the parking brake shoes.
   For additional information, refer to: Parking Brake Shoe and Lining Adjustment (206-05, General Procedures).

8. Install the rear wheels and tires.
   - Tighten the wheel nuts to 140 Nm (103 lb.ft).

9. Connect the battery ground cable.
   For additional information, refer to: Specifications (414-00, Specifications).

PARKING BRAKE AND ACTUATION

PARKING BRAKE SHOES BEDDING-IN (G899410)

GENERAL PROCEDURES

70.40.12	SHOES - PARKING BRAKE - BEDDING IN	ALL DERIVATIVES	0.3	USED WITHINS

NOTE:

This procedure must be carried out if, new parking brake shoes are fitted, new rear brake discs are fitted or if the vehicle has been mud wading (not water) for more than 50 miles.

1. Carry out the parking brake shoe bedding-in procedure.

2.

NOTE:

> The parking brake shoes 'bedding-in procedure' mode will remain active for the remainder of the ignition cycle, or until the vehicle speed exceeds 31 mph (50 kph). If the procedure needs to be re-entered, the entry actions must be repeated.

To enter the parking brake shoes 'bedding-in procedure' mode.

- Start and run the engine.
- Apply the brake pedal 3 times within 10 seconds and hold applied after the 3rd application.
- Apply the electronic parking brake switch 4 times, followed by 3 release applications within 10 seconds.

---

3. Once the parking brake shoes 'bedding-in procedure' mode has been entered, the parking brake warning lamp will flash and the parking brake shoes can be bedded-in. Conduct 10 repeated stops from 30 - 35 kph (19 - 22 mph), followed by a 500 metre (547 yard) interval between each stop to allow the parking brake actuator and rear brakes to cool.
   - The electronic parking brake brake force will be increased up to the dynamic maximum so long as the switch is held in the applied position.
   - If the switch is released to either the NEUTRAL or OFF positions, the electronic parking brake will be released.
   - The parking brake actuator and rear brakes MUST be allowed to cool between applications, either by driving at 19 mph (30 kph) for 500 metres (547 yards)

or remaining stationary for 1 minute between each application.

PARKING BRAKE AND ACTUATION

PARKING BRAKE SWITCH

(G898391)

REMOVAL AND INSTALLATION

70.35.46	SWITCH - ELECTRIC PARKING BRAKE - RENEW	ALL DERIVATIVES	0.5	USED WITHINS	+

REMOVAL

1. Disconnect the battery ground cable.
   For additional information, refer to: Specifications (414-00, Specifications).

2. Remove the floor console upper panel.
   For additional information, refer to: Floor Console Upper Panel (501-12, Removal and Installation).

3.

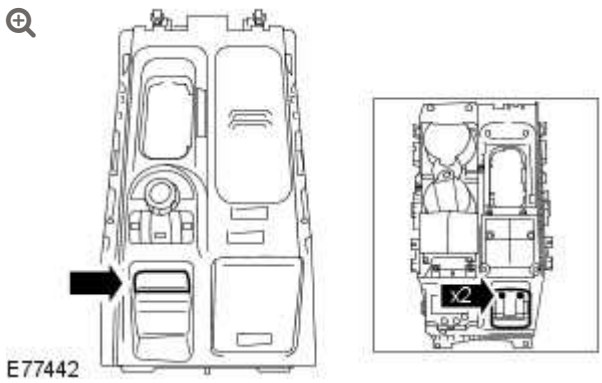

Remove the parking brake switch.

- Remove the parking brake switch trim panel.
- Remove the 2 screws.

INSTALLATION

1. Install the parking brake switch.
   - Install the 2 screws.
   - Install the parking brake switch trim panel.
2. Install the floor console upper panel.
   For additional information, refer to: Floor Console Upper Panel (501-12, Removal and Installation).
3. Connect the battery ground cable.
   For additional information, refer to: Specifications (414-00, Specifications).

HYDRAULIC BRAKE ACTUATION

BRAKE FLUID RESERVOIR

(G1225597)

REMOVAL AND INSTALLATION

70.25.31	RESERVOIR - BRAKE FLUID - RENEW	ALL DERIVATIVES	0.7	USED WITHINS	+

REMOVAL

CAUTION:

If brake fluid is spilt on the paintwork, the affected area must be immediately washed down with cold water.

NOTE:

Removal steps in this procedure may contain installation details.

1.

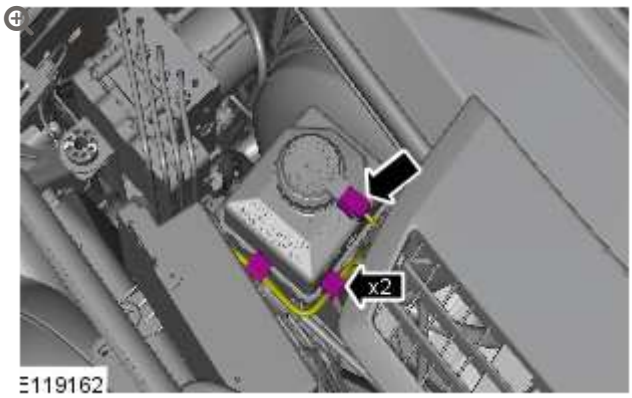

2.

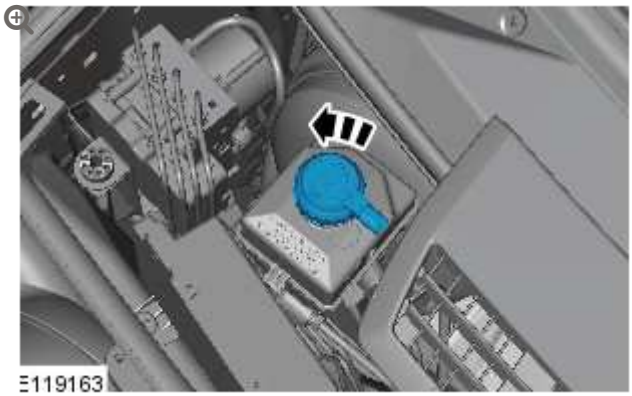

3. Using a suitable suction device drain the brake fluid resrvoir.

4.

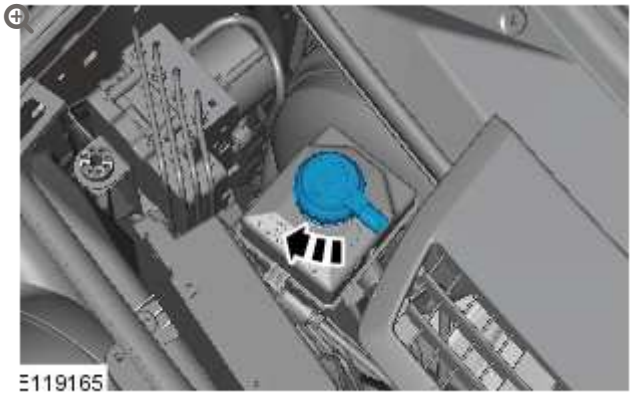

5.

CAUTIONS:

- Make sure that all openings are sealed. Use new blanking plugs.
- Be prepared to catch escaping fluid.

NOTE:

Discard the seals.

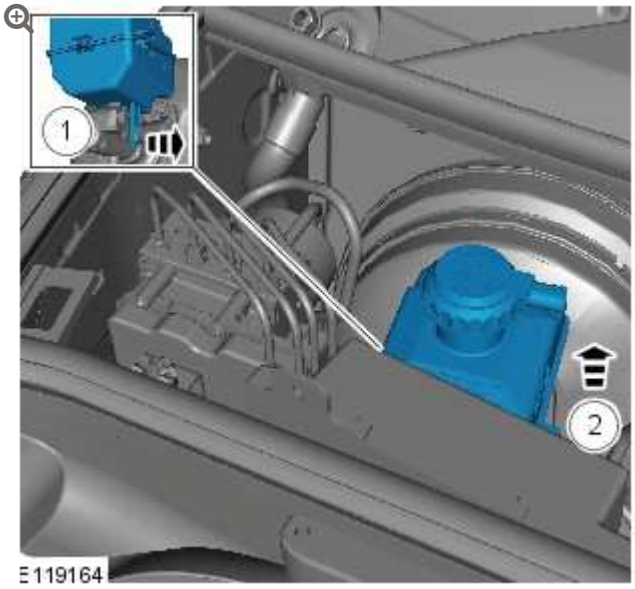

1. Release the both locking tangs.
2. Remove the brake fluid reservoir.

INSTALLATION

ℹ	All vehicles

1.

NOTES:

- Remove and discard the blanking plugs.
- Install new seals.

To install, reverse the removal procedure.

Vehicles with standard brakes

2. Bleed the braking system.
   Refer to: Brake System Bleeding - Vehicles With: Standard Brakes (206-00, General Procedures).

Vehicles with high performance brakes

3. Bleed the braking system.
   Refer to: Brake System Bleeding - Vehicles With: High Performance Brakes (206-00, General Procedures).

HYDRAULIC BRAKE ACTUATION

BRAKE MASTER CYLINDER (G1225587)

REMOVAL AND INSTALLATION

70.30.08	CYLINDER – MASTER – TANDEM – RENEW	ALL DERIVATIVES	0.8	USED WITHINS	+

REMOVAL

NOTES:

- Removal steps in this procedure may contain installation details.
- RH illustration shown, LH is similar.

1. Disconnect the battery ground cable.
   Refer to: Specifications (414-00 Charging System - General Information, Specifications).

2. Refer to: Brake Fluid Reservoir (206-06 Hydraulic Brake Actuation, Removal and Installation).

3.

CAUTION:

Make sure that all openings are sealed. Use new blanking caps.

NOTES:

- Discard the retaining nuts.
- Remove and discard the O-ring seal.

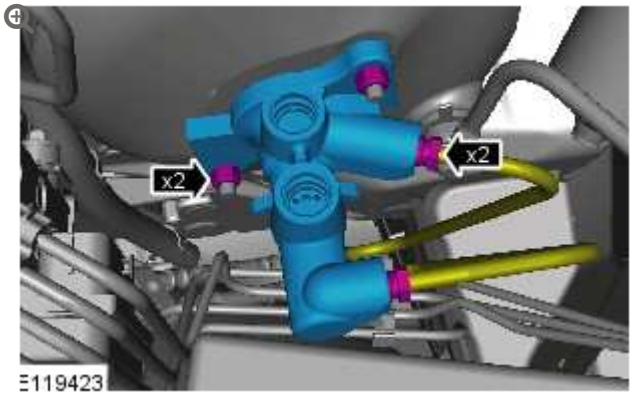

Torque:

Retaining nuts **23 Nm**

Brake pipe unions **16 Nm**

INSTALLATION

All vehicles

1.

WARNING:

Make sure that new retaining nuts are installed.

NOTES:

- Install a new O-ring seal.
- Remove and discard the blanking caps.

To install, reverse the removal procedure.

	Vehicles with standard brakes

2. Bleed the braking system.
   Refer to: Brake System Bleeding - Vehicles With: Standard Brakes (206-00 Brake System - General Information, General Procedures).

	Vehicles with high performance brakes

3. Bleed the braking system.
   Refer to: Brake System Bleeding - Vehicles With: High Performance Brakes (206-00 Brake System - General Information, General Procedures).

HYDRAULIC BRAKE ACTUATION

BRAKE PEDAL (G419761)

REMOVAL AND INSTALLATION

70.35.01	PEDAL - BRAKE - RENEW	ALL DERIVATIVES	2.5	USED WITHINS	+

REMOVAL

1. Remove the headlamp switch.
   For additional information, refer to: Headlamp Switch (417-01 Exterior Lighting, Removal and Installation).

2. Remove the stoplamp switch.
   For additional information, refer to: Stoplamp Switch (417-01 Exterior Lighting, Removal and Installation).

3.

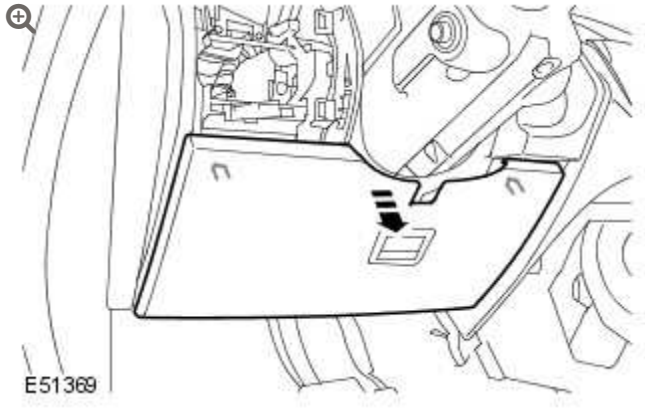

Remove the instrument panel access panel.

- Release the 2 clips.

4.

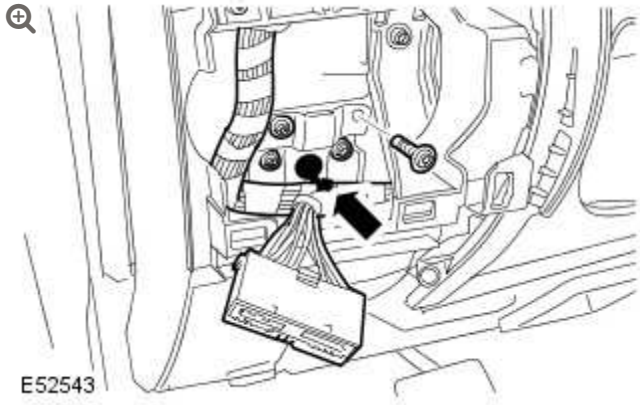

Remove the brake pedal bracket.

- Release the wiring harness clip.
- Remove the 4 Torx bolts.

5.

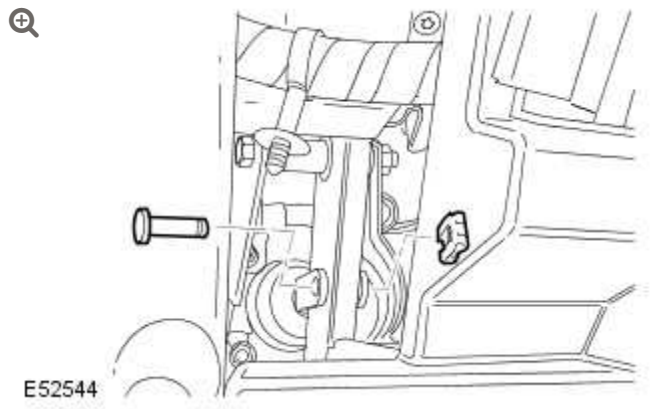

Remove the brake pedal clevis pin.

- Remove the clip.

6.

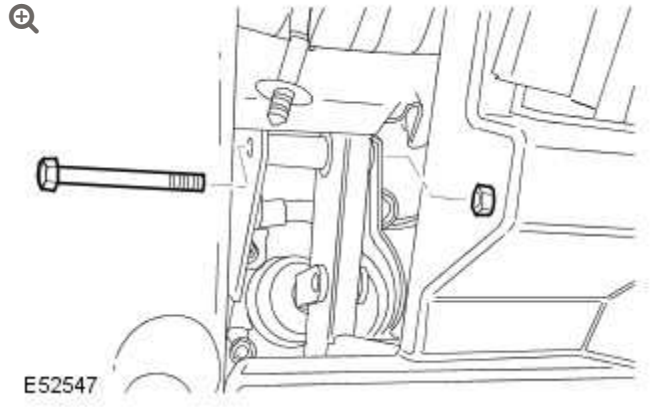

Remove the brake pedal.

- Remove the nut and bolt.

7.

NOTE:

Do not disassemble further if the component is removed for access only.

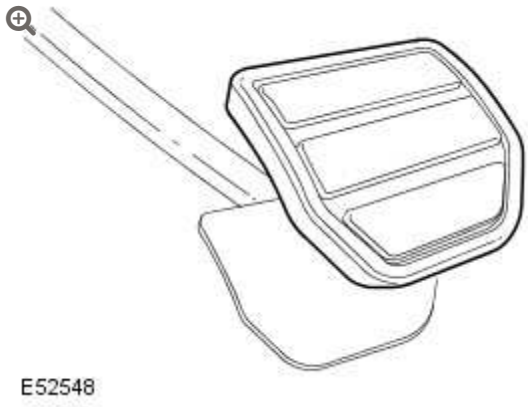

Remove the brake pedal pad.

INSTALLATION

1. Install the brake pedal pad.

2. Install the brake pedal.
   - Clean the component mating faces.
   - Tighten the nut and bolt to 45 Nm (33 lb.ft).

3. Install the brake pedal clevis pin.
   - Install the clip.

4. Install the brake pedal bracket.
   - Tighten the Torx bolts to 10 Nm (7 lb.ft).
   - Secure the wiring harness.

5. Install the instrument panel access panel.
   - Secure with the clips.

6. Install the stoplamp switch.
   For additional information, refer to: Stoplamp Switch (417-01 Exterior Lighting, Removal and Installation).

7. Install the headlamp switch.
   For additional information, refer to: Headlamp Switch (417-01 Exterior Lighting, Removal and Installation).

HYDRAULIC BRAKE ACTUATION

BRAKE PEDAL AND BRACKET (G928023)

REMOVAL AND INSTALLATION

70.35.01	PEDAL - BRAKE - RENEW	ALL DERIVATIVES	2.5	USED WITHINS	+
70.35.03	PEDAL BOX - RENEW	ALL DERIVATIVES	0.4	USED WITHINS	+

REMOVAL

1. Disconnect the battery ground cable.
   For additional information, refer to: Specifications (414-00, Specifications).

2. **NOTE:**

   LH illustration shown, RH is similar.

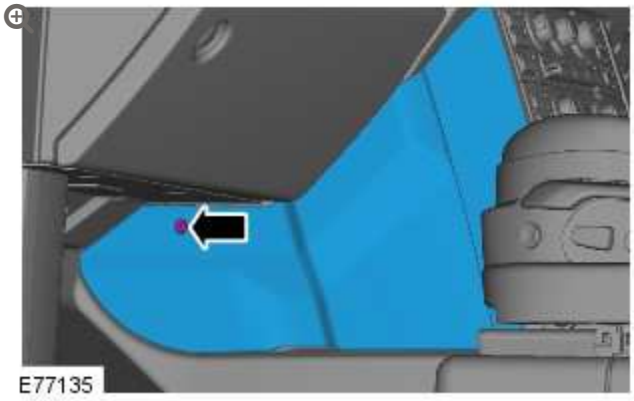

Remove the floor console extension.

- Remove the screw.
- Release the 2 clips.

3.

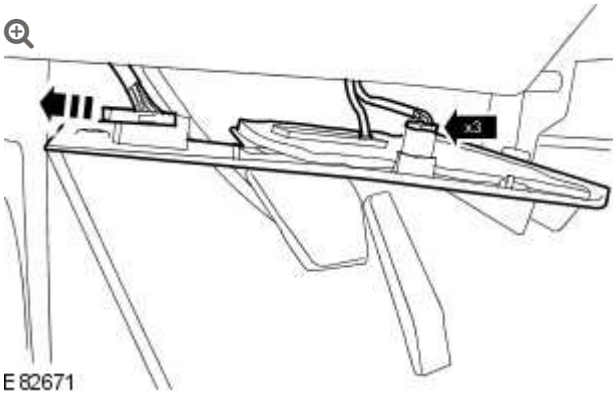

Remove the driver side closing trim panel.

- Remove the 3 screws.
- Disconnect the footwell lamp electrical connector.
- Release the vehicle diagnostic socket.

4.

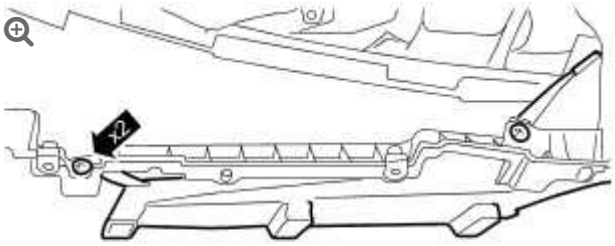

E84466

Remove the driver side footwell duct.

- Remove the 2 screws.

5.

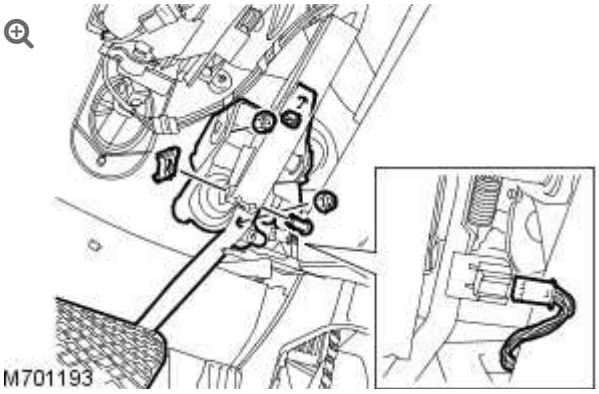

M701193

Release the brake booster push rod from the brake pedal.

- Remove the clip.
- Remove the pin.

6. Remove the brake pedal and bracket.
   - Disconnect the stoplamp switch electrical connector.
   - Remove and discard the 3 nuts.
   - Reposition the brake booster and brake master cylinder.

7.

NOTE:

Do not disassemble further if the component is removed for access only.

Remove the stoplamp switch.

- Release the clip.

8. Remove the stoplamp switch bracket.
   - Remove the 2 nuts and 2 bolts.
   - Remove the brake pedal return spring.

INSTALLATION

1. Install the stoplamp switch bracket.
   - Install the brake pedal return spring.
   - Tighten the nuts and bolts to 10 Nm (7 lb.ft).
2. Install the stoplamp switch.
   - With the brake pedal released, make sure the stoplamp switch is in contact with the brake pedal.
3. **WARNING:**

   Make sure that new nuts are installed.

   CAUTION:

   The nuts must be re-torqued after 20 minutes.

Install the brake pedal and bracket.

- Reposition the brake booster and brake master cylinder.
- Tighten the nuts to 26 Nm (19 lb.ft).

4. Secure the brake booster push rod to the brake pedal.
   - Install the pin.
   - Install the clip.
5. Install the driver side footwell duct.
   - Tighten the screws.
6. Install the driver side closing trim panel.
   - Connect the footwell lamp electrical connector.
   - Secure the vehicle diagnostic socket.
   - Tighten the screws.
7. Install the floor console extension.
   - Secure the clips.
   - Tighten the screw.
8. Connect the battery ground cable.
   For additional information, refer to: Specifications (414-00, Specifications).

2012.0 RANGE ROVER (LM), 206-06

HYDRAULIC BRAKE ACTUATION

DESCRIPTION AND OPERATION

COMPONENT LOCATION

NOTES:

- 4.4L V8 vehicle shown, other vehicles similar
- right-hand drive (RHD) installation shown, left-hand drive (LHD) installation similar

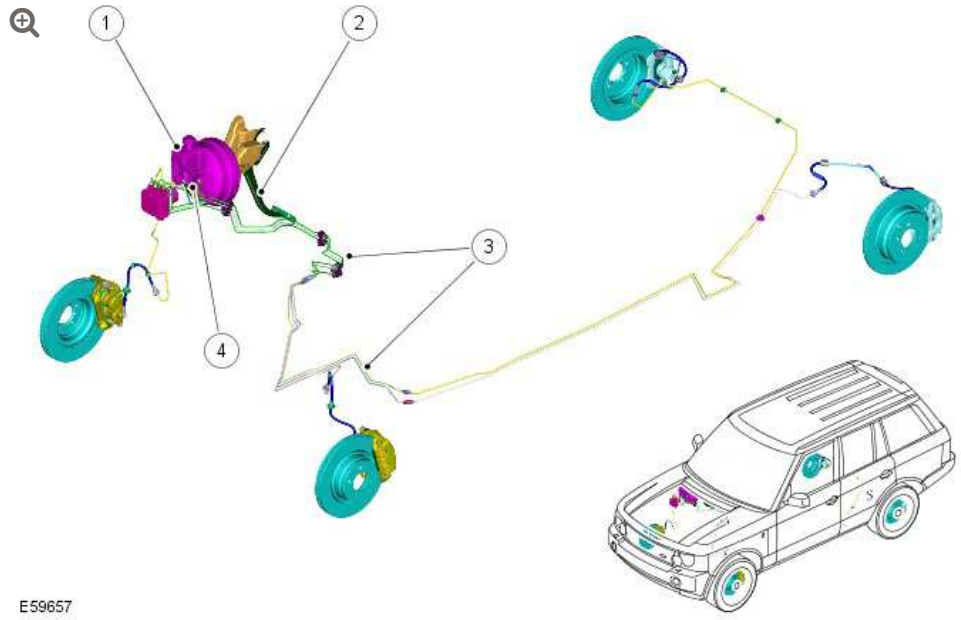

ITEM	DESCRIPTION

ITEM	DESCRIPTION
1	Brake fluid reservoir
2	Brake pedal
3	Brake pipes and hoses
4	Brake master cylinder

OVERVIEW

Hydraulic brake actuation consists of:

- The brake pedal.
- The brake master cylinder and reservoir.
- The hydraulic pipes and hoses.

BRAKE PEDAL

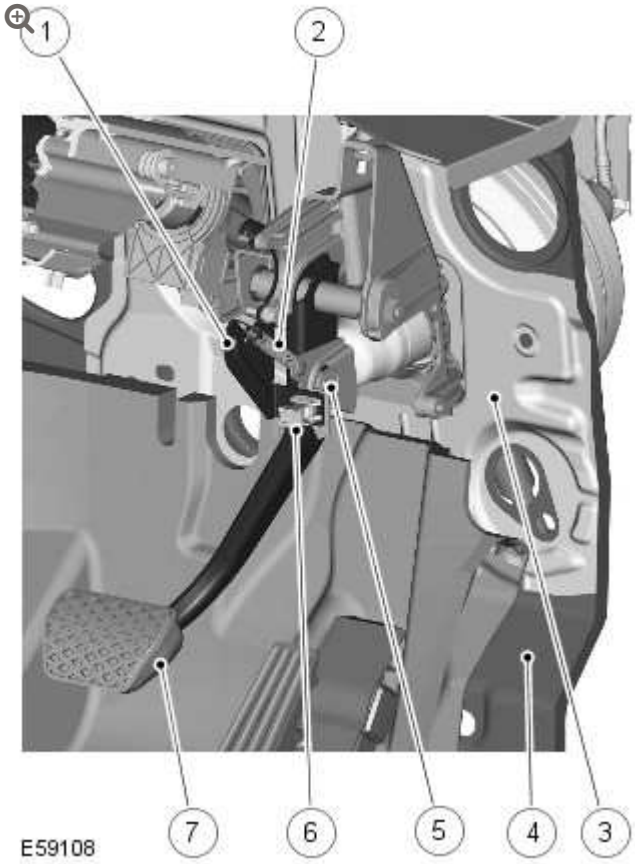

ITEM	DESCRIPTION
1	Brake pedal bracket
2	Pedal return spring
3	Brake pedal bracket reinforcement
4	Engine bulkhead
5	Clevis pin and clip
6	Stop lamp switch
7	Brake pedal

The brake pedal is mounted in a bracket attached to the rear side of the engine bulkhead. A clevis pin and clip connect the brake pedal to the push rod of the brake booster.

The stop lamp switch is mounted in the brake pedal bracket and operated by the brake pedal.
For additional information, refer to: Anti-Lock Control - Traction Control (206-09A Anti-Lock Control - Traction Control, Description and Operation).

BRAKE MASTER CYLINDER AND RESERVOIR

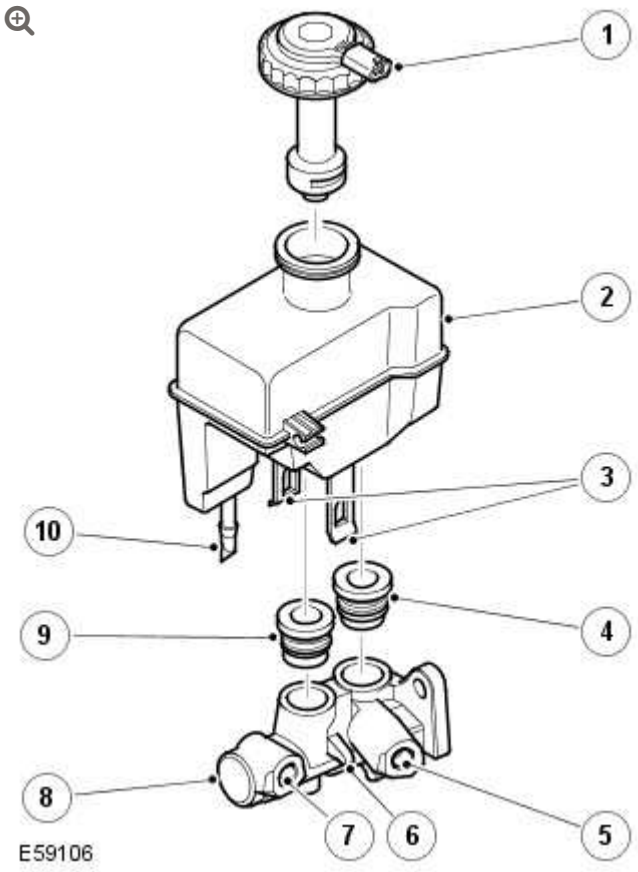

ITEM	DESCRIPTION
1	Brake fluid reservoir cap and level switch
2	Brake fluid reservoir
3	Reservoir securing straps
4	Primary inlet seal
5	Primary outlet port
6	Reservoir securing lug

ITEM	DESCRIPTION
7	Secondary outlet port
8	Cylinder housing
9	Secondary inlet seal
10	Outlet for pre-charge pump (reference - not used)

The master cylinder assembly produces hydraulic pressure to operate the brakes when the brake pedal is pressed. The assembly is attached to the front of the brake servo assembly, and comprises a cylinder containing two pistons in tandem. The rear piston produces pressure for the primary circuit and the front piston produces pressure for the secondary circuit.

When the brake pedal is pressed, the front push rod in the brake servo assembly pushes the primary piston along the cylinder bore. This produces pressure in the primary pressure chamber which, in conjunction with the primary spring, overcomes the secondary spring and simultaneously moves the secondary piston along the cylinder bore. The initial movement of the pistons, away from the piston stops, closes the primary and secondary center valves.

Further movement of the pistons then pressurizes the fluid in the primary and secondary pressure chambers, and thus the brake circuits. The fluid in the chambers, behind the pistons, is unaffected by movement of the pistons and can flow unrestricted through the feed holes between the chambers and the reservoir. When the brake pedal is released, the primary and secondary springs push the pistons back down the bore of the cylinder. As the pistons contact the piston stops, the primary and secondary center valves open, which allows fluid to circulate between the reservoir, through the center valves, the chambers behind the pistons and the feed holes.

The brake fluid reservoir is located on top of the master cylinder assembly. The reservoir is internally divided to provide an

independent supply of fluid to each brake circuit, and so prevent a single fluid leak from disabling both primary and secondary brake circuits. Should a failure occur in one circuit, the remaining circuit will still operate effectively, although brake pedal travel and vehicle braking distances will increase.

A fluid level switch is incorporated into the reservoir cap:

- With sufficient fluid in the reservoir the contacts of the fluid level switch are closed.
- When the fluid level drops below allowable limits, the switch contacts open.

Since the normal position is closed, this circuit is monitored for shorts to + and ground.

The anti-lock brake system (ABS) module monitors the input from the fluid level switch and issues a low fluid level signal to the lighting control module (LCM) on the controller area network (CAN) if the switch opens.

If the low fluid level signal is momentary, the LCM signals the instrument cluster of the condition. The instrument cluster then informs the ABS module over the CAN bus. If the signal is received prior to the activation of the pre-charge pump, the pre-charge pump activation is delayed.

If the signal is present for more then 25 seconds, the LCM issues two I bus messages for the instrument cluster:

- Display CHECK BRAKE FLUID in the message center.
- Notify the ABS module, via CAN, that the fluid level has been low for more than 25 seconds.

The ABS module immediately switches DSC functions off and sends a CAN signal to the instrument cluster to continuously illuminate the DSC warning indicator.

BRAKE PIPES AND HOSES

The brake pipes and hoses connect the master cylinder to the wheel brakes via the hydraulic control unit. The pipes are arranged to provide a front and rear split braking system. The brakes on the front axle are operated by the primary system; the brakes on the rear axle are operated by the secondary system.

2012.0 RANGE ROVER (LM), 206-06

HYDRAULIC BRAKE ACTUATION

DIAGNOSIS AND TESTING

For additional information.

REFER to: Brake System (206-00, Diagnosis and Testing).

POWER BRAKE ACTUATION

SPECIFICATIONS

General Specifications

ITEM	SPECIFICATION
Boost ratio	8:1

Torque Specifications

DESCRIPTION	NM	LB-FT
Brake vacuum pump bolts - 5.0L engine	12	9
Brake vacuum pump stud - 4.4D (TdV8) engine	13	10
Brake vacuum pump nut - 4.4D (TdV8) engine	23	17
Brake vacuum pump bolts - 4.4D (TdV8) engine	23	17
Brake booster nuts	23	17

POWER BRAKE ACTUATION

BRAKE BOOSTER – LHD AWD (G1225839)

REMOVAL AND INSTALLATION

70.50.01	BRAKE BOOSTER ASSEMBLY – RENEW	LEFT HAND DRIVE	1.5	USED WITHINS	+

REMOVAL

NOTE:

Removal steps in this procedure may contain installation details.

1. Disconnect the battery ground cable.
   Refer to: Specifications (414-00, Specifications).
2. Refer to: Anti-Lock Brake System (ABS) Module - 5.0L, LHD (206-09A, Removal and Installation).
3. Refer to: Brake Master Cylinder (206-06, Removal and Installation).

4.

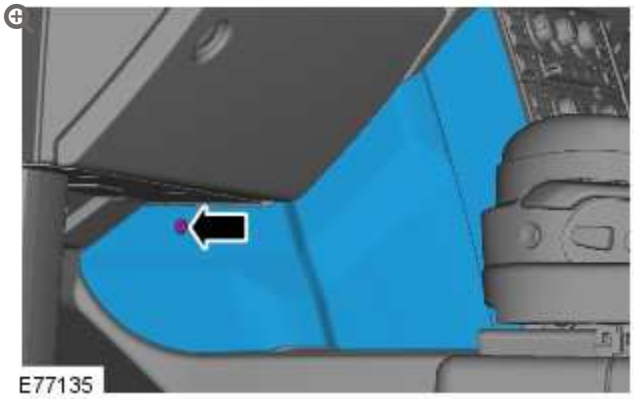

5.

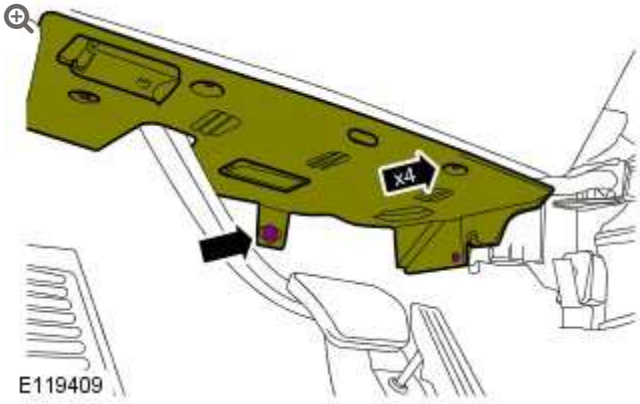

6.

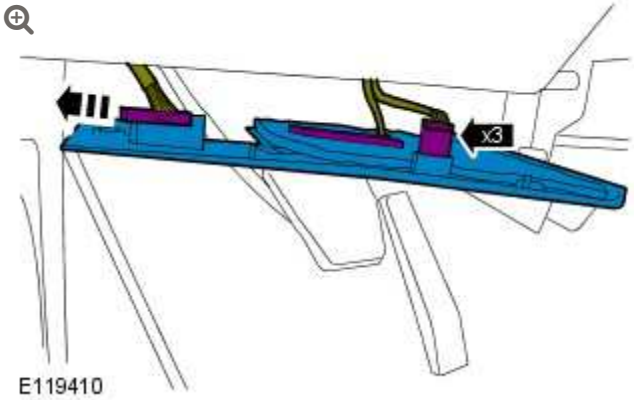

7.

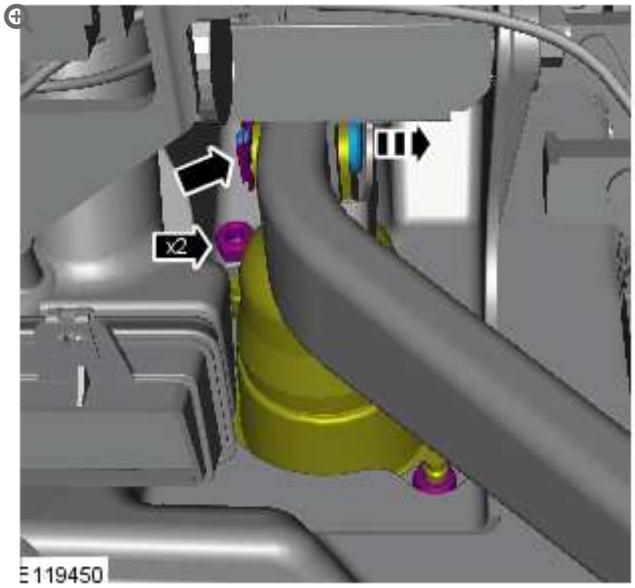

Torque: **25 Nm**

8.

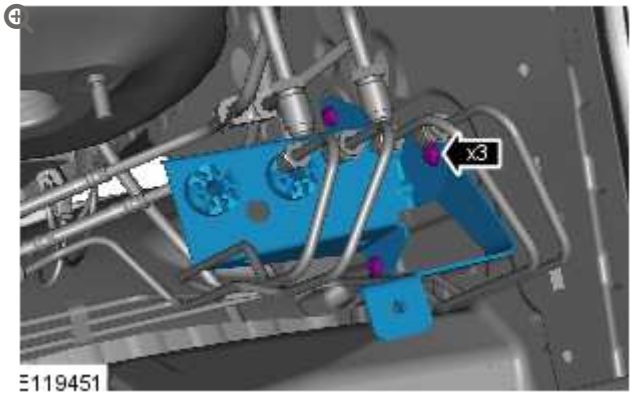

Torque: **5 Nm**

9.

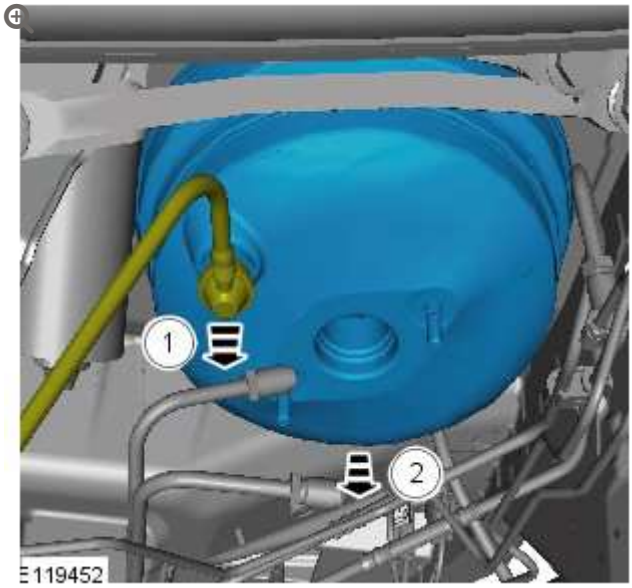

Remove the following items:

1. Brake vacuum pipe.

1. Brake booster.

INSTALLATION

	All vehicles

1. To install, reverse the removal procedure.

	Vehicles with standard brakes

2. Bleed the braking system.
   Refer to: Brake System Bleeding - Vehicles With: Standard Brakes (206-00, General Procedures).

	Vehicles with high performance brakes

3. Bleed the braking system.

Refer to: Brake System Bleeding - Vehicles With: High Performance Brakes (206-00, General Procedures).

2012.0 RANGE ROVER (LM), 206-07

POWER BRAKE ACTUATION

DESCRIPTION AND OPERATION

COMPONENT LOCATION – 5.0L SUPERCHARGED

NOTE:

left-hand drive (LHD) installation shown, right-hand drive (RHD) installation similar

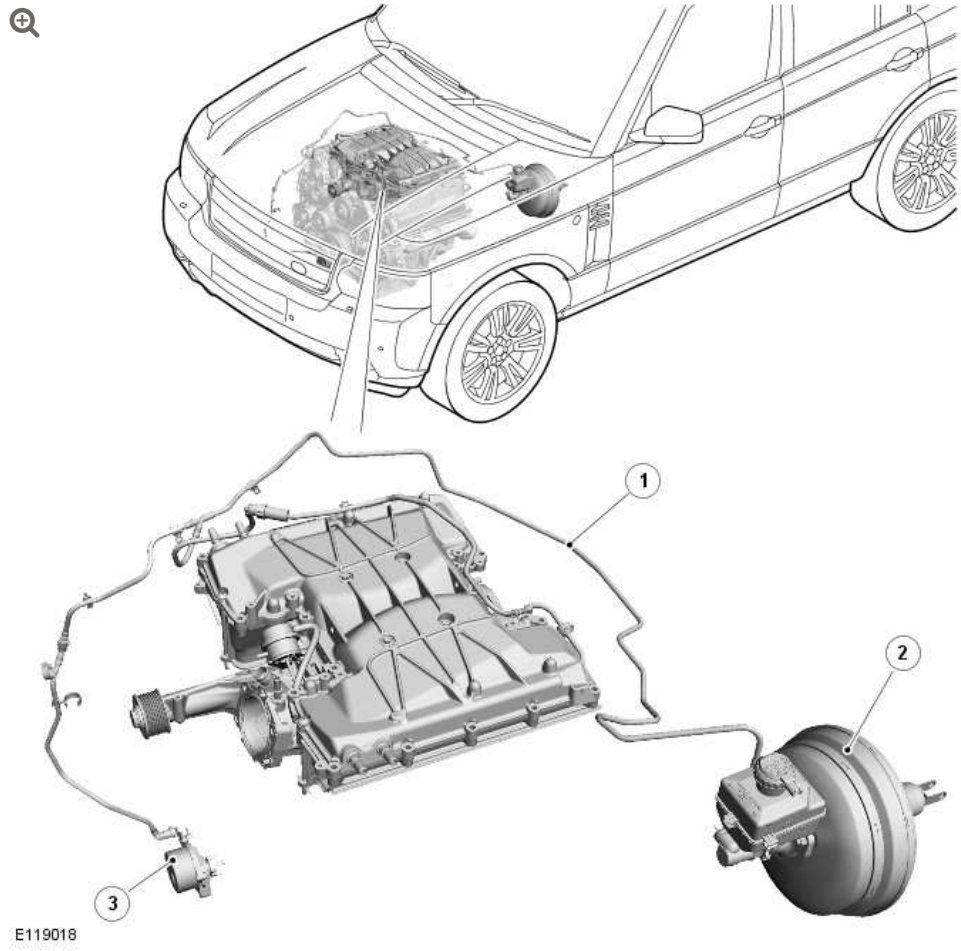

ITEM	DESCRIPTION
1	Vacuum pipes
2	Brake booster
3	Vacuum pump

COMPONENT LOCATION – 5.0L NATURALLY ASPIRATED

NOTE:

RHD installation shown, LHD installation similar

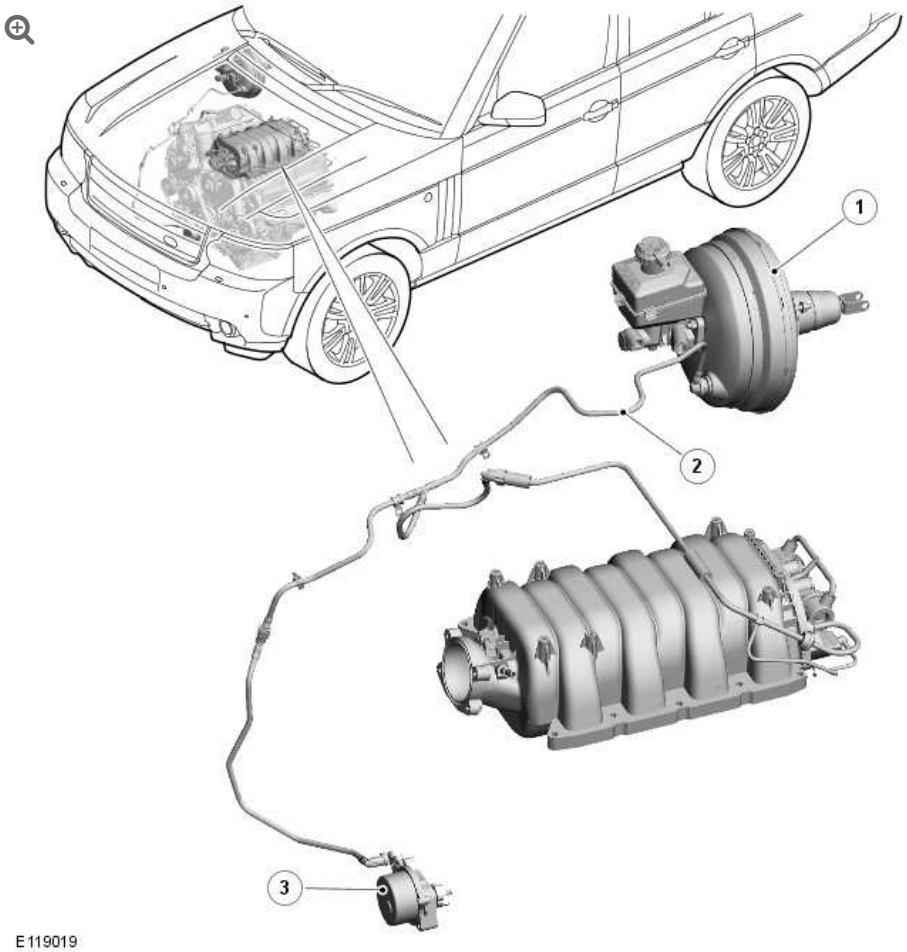

ITEM	DESCRIPTION
1	Brake booster
2	Vacuum pipes
3	Vacuum pump

COMPONENT LOCATION – TDV8

NOTE:

LHD installation shown, RHD installation similar

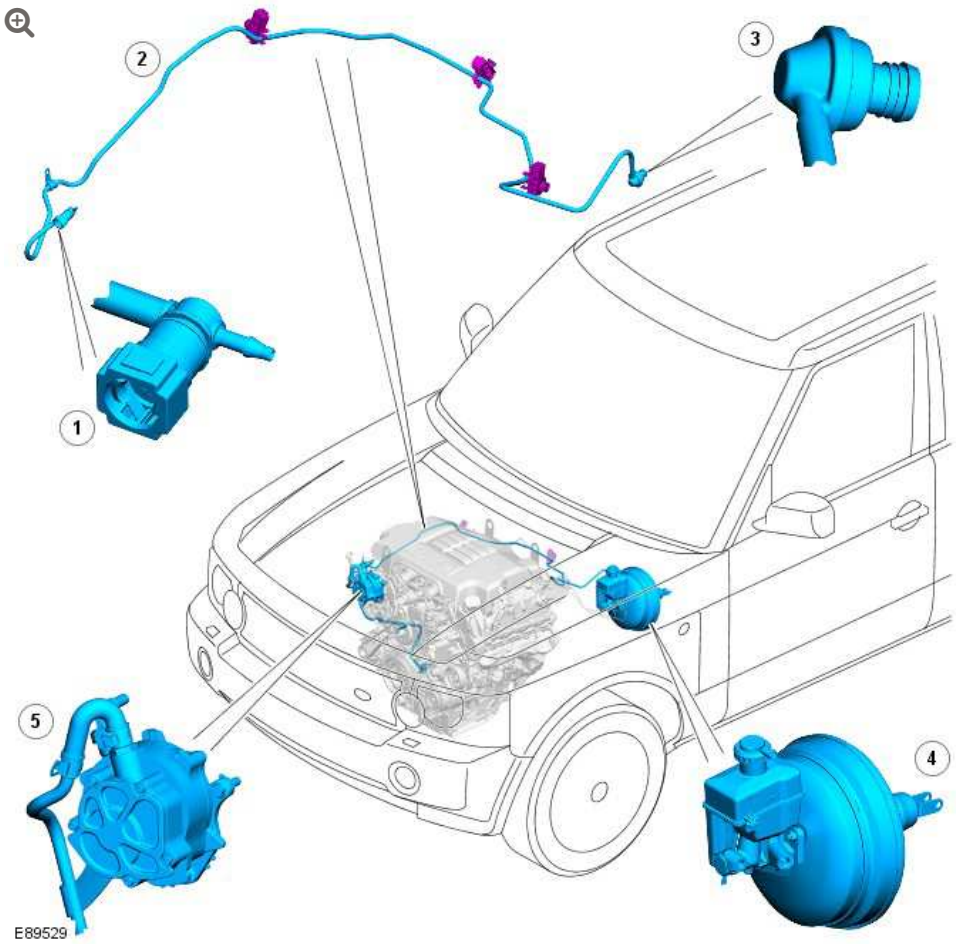

ITEM	DESCRIPTION
1	Vacuum pipe connection to vacuum pump
2	Vacuum pipe and check valve
3	Check valve
4	Brake booster
5	Vacuum pump

OVERVIEW

Power assistance for the brakes is provided by a vacuum operated brake booster. Vacuum is produced by an engine driven vacuum pump.

VACUUM PIPES

Plastic vacuum pipes connect the brake booster to the vacuum source. Check valves are incorporated into the vacuum pipes.

On gasoline vehicles the connection with the brake booster contains a check valve to maintain the vacuum in the brake booster. An in-line check valve near the connection with the intake manifold prevents air being drawn from the intake manifold and fuel vapor from entering the pipes.

On TdV8 vehicles there is a single check valve integrated into the vacuum pipe connection with the brake booster. The check valve maintains a vacuum in the brake booster when the engine is running at low speeds, and the vacuum pump is operating at less than the optimum.

BRAKE BOOSTER

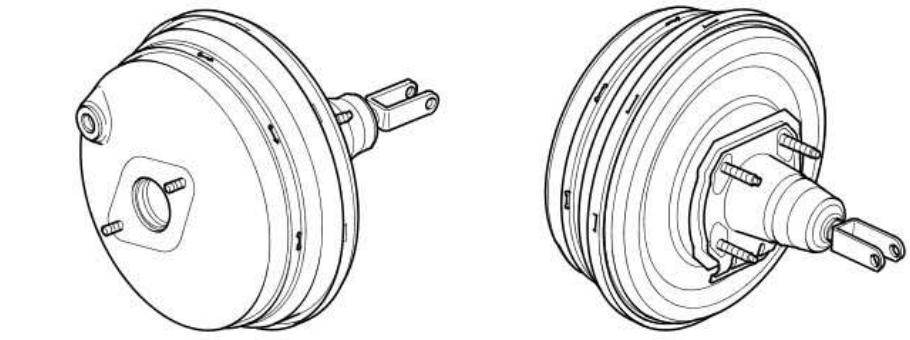

E49905

The brake booster provides power assistance to increase the braking effort applied by the driver. The assembly is attached to the front of the pedal box and comprises a circular housing containing a diaphragm, push rods, valve and filter. A push rod at the rear of the housing protrudes through an aperture in the bulkhead and is connected to the brake pedal.

The vacuum pipe is connected to a port in the front face of the brake booster housing.

With the brake pedal released and the engine running, a vacuum is present on both sides of the diaphragm. When the brake pedal is pressed, the rear push rod moves forward and opens the valve to allow atmospheric pressure through the filter into the pedal side of the diaphragm. The pressure differential acting on both sides of the diaphragm increases the pressure being applied by the brake pedal.

In the event that the brake booster fails, the hydraulic system will still function but will require greater pedal effort due to the lack of vacuum assistance.

VACUUM PUMP - V8 5.0L

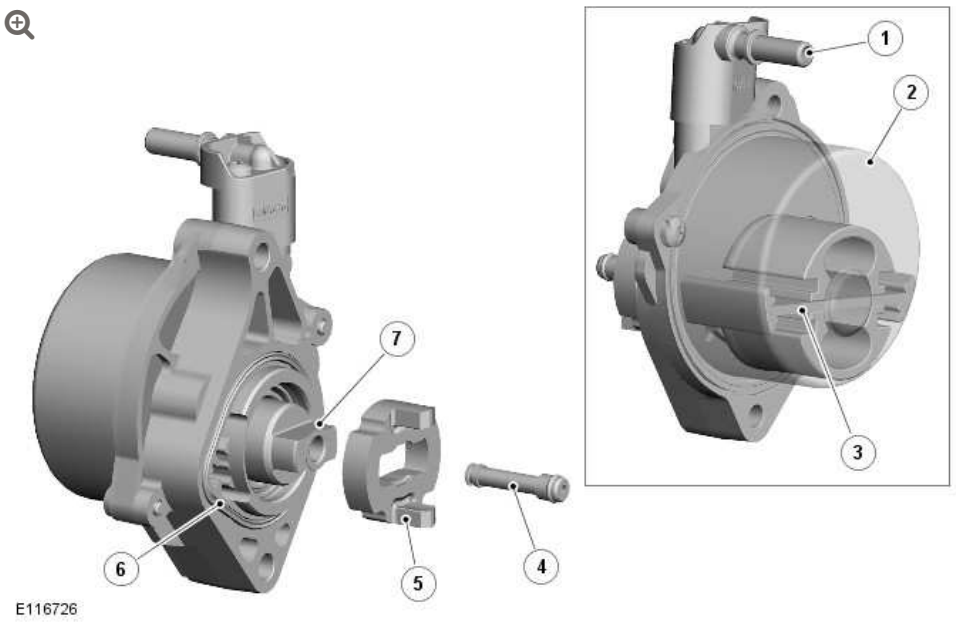

ITEM	DESCRIPTION
1	Vacuum pipe connection
2	Cover
3	Vane
4	Oil tube

ITEM	DESCRIPTION
5	Drive gear
6	Seal
7	Rotor

The vacuum pump is a mechanically driven vane pump installed on the front of the engine sump body and driven by the auxiliary camshaft. Two bolts attach the vacuum pump to the sump body. A seal is installed in a groove on the mating face of the vacuum pump.

The vacuum pump drive gear locates on the end of the rotor and engages with slots in the front of the auxiliary camshaft. An oil tube in the center of the rotor supplies engine oil from the auxiliary camshaft to lubricate the vacuum pump. Exhaust air from the vacuum pump is expelled into the engine sump through the sump body.

VACUUM PUMP – TDV8

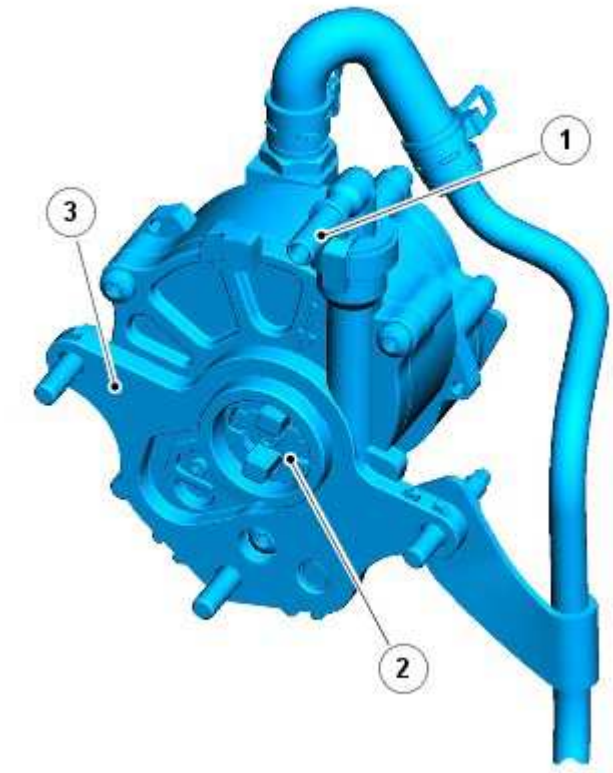

E89530

ITEM	DESCRIPTION
1	Vacuum pump connection to brake booster
2	Camshaft drive lobe
3	Mounting flange

The Vacuum required for brake booster operation on TdV8 vehicles is provided by an engine driven vacuum pump. The vacuum pump is a radial vane type pump mounted to the front of the right-hand (RH) cylinder head which is driven by the intake camshaft. The vacuum pipe from the brake booster connects to an elbow on the rim of the vacuum pump.

The vacuum pump is lubricated and cooled by engine oil supplied to a port in the front face of the vacuum pump from a gallery in the

cylinder head. The oil return is through a vent in the front face of the pump into a drain cavity in the cylinder head. Air extracted from the brake booster is vented into the drain cavity with the returning engine oil.

The vacuum pump is also used to supply vacuum for operation of the following components:

- The exhaust gas recirculation (EGR) system.
  For additional information, refer to: Electronic Engine Controls (303-14C, Description and Operation).
- The adaptive engine mounts.
  For additional information, refer to: Electronic Engine Controls (303-14C, Description and Operation).

2012.0 RANGE ROVER (LM), 206-07

POWER BRAKE ACTUATION

DIAGNOSIS AND TESTING

For additional information.

REFER to: Brake System (206-00, Diagnosis and Testing).

POWER BRAKE ACTUATION

BRAKE VACUUM PUMP – V8 5.0L PETROL/V8 S/C 5.0L PETROL (G1225279)

REMOVAL AND INSTALLATION

70.50.19	VACUUM PUMP – BRAKE BOOSTER – RENEW	5000 CC, AJ V8	1.3	USED WITHINS	+
70.55.02	BRAKE CALIPER – FRONT – EACH – RENEW	ALL DERIVATIVES	0.5	USED WITHINS	+

REMOVAL

NOTE:

Removal steps in this procedure may contain installation details.

1.

WARNING:

Make sure to support the vehicle with axle stands.

Raise and support the vehicle.

2. Refer to: Radiator Splash Shield (501-02, Removal and Installation).

3. Refer to: Engine Oil Draining and Filling (303-01B, General Procedures).

4. **NOTE:**

Discard the O-ring seal.

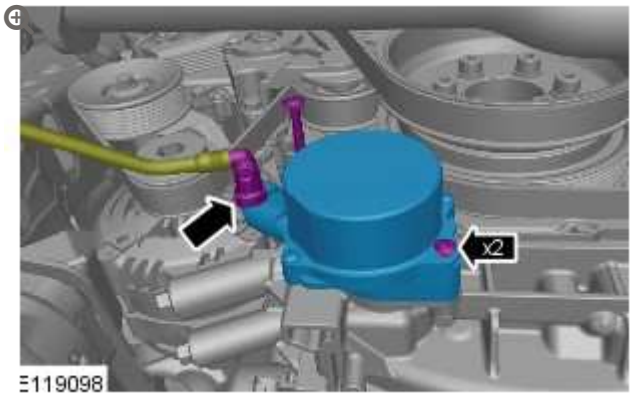

Torque: **12 Nm**

INSTALLATION

1. **NOTE:**

Install a new O-ring seal.

To install, reverse the removal procedure.

ANTI-LOCK CONTROL - TRACTION CONTROL

SPECIFICATIONS

General Specifications

ITEM	SPECIFICATION
System type	Bosch 8.0 Anti-lock braking system with Electronic Brake Distribution (EBD), Corner Brake Control (CBC), Electronic Traction Control (ETC), Hill Descent Control (HDC), Anti-roll Mitigation (ARM), Emergency Brake Assist (EBA), and Dynamic Stability Control (DSC)
Wheel speed sensor type	Bosch DF11im
Wheel speed sensor location	Front and rear knuckles with the active directional sensor acting on the driveshaft pole wheel
Yaw rate sensor type	Bosch DRS MM3.10

Torque Specifications

DESCRIPTION	NM	LB-FT	LB-IN
Front wheel speed sensor bolt	9	-	80
Front brake caliper anchor plate bolts	275	202	-
Front brake caliper housing bolts	32	24	-

DESCRIPTION	NM	LB-FT	LB-IN
Front brake hose retaining bracket to wheel knuckle bolt	25	18	-
Rear wheel speed sensor to wheel knuckle bolt	9	-	80
Anti-lock braking system (ABS) module mounting bracket nuts	8	-	71
ABS module to mounting bracket nuts	23	17	-
Brake tube union nuts	18	13	-
Yaw rate sensor bolts	6	-	53
Wheel retaining nuts	140	103	-

ANTI-LOCK BRAKE SYSTEM (ABS) MODULE - TDV8 3.6L DIESEL/TDV8 4.4L DIESEL/V8 5.0L PETROL/V8 S/C 5.0L PETROL (G1225901)

REMOVAL AND INSTALLATION

70.65.49	HYDRAULIC CONTROL UNIT - RENEW	LEFT HAND DRIVE	0.9	USED WITHINS	+

REMOVAL

NOTES:

- The hydraulic control unit (HCU) mounted to the ABS module cannot be serviced separately. If the HCU requires replacement, then the ABS module must be replaced as a complete assembly.
- Removal steps in this procedure may contain installation details.

1. Disconnect the battery ground cable.
   Refer to: Specifications (414-00, Specifications).

2. **CAUTIONS:**

   - Make sure that the area around the component is clean and free of foreign material.
   - Make sure that all openings are sealed. Use new blanking caps.
   - If brake fluid is spilt on the paintwork, the affected area must be immediately washed down with cold water.

   NOTES:

   - Note the position of the components prior to removal.
   - Some fluid spillage is inevitable during this operation.

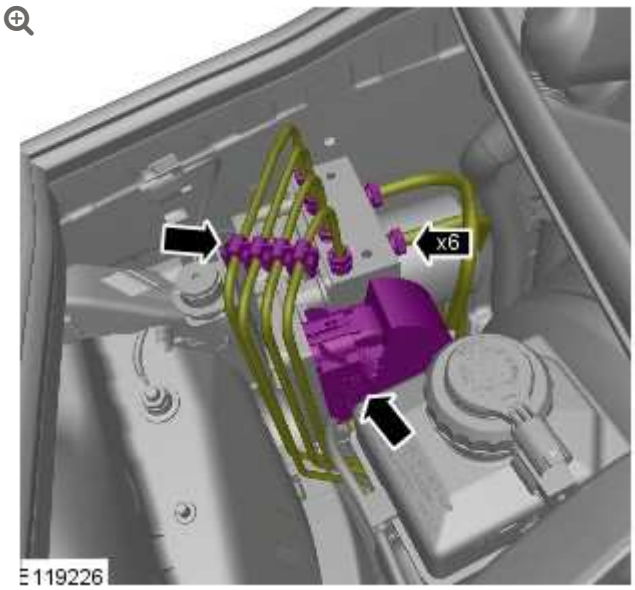

Torque: **18 Nm**

3.

NOTE:

Note the orientation of the locating pins.

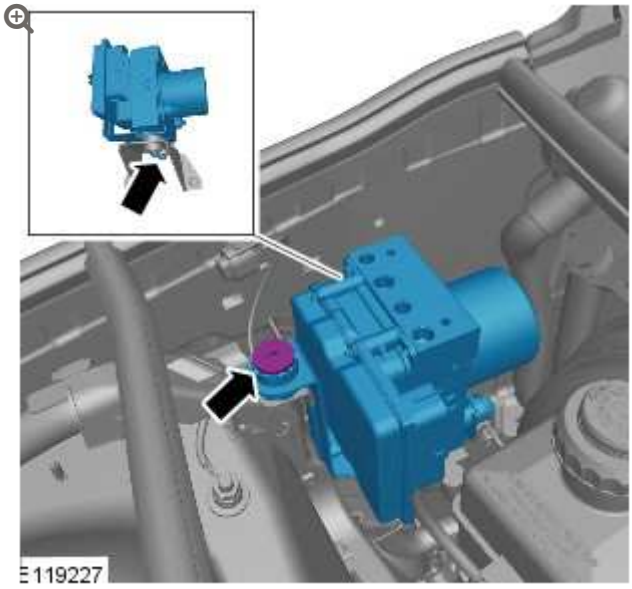

Torque: **9 Nm**

4.

NOTES:

- Do not disassemble further if the component is removed for access only.
- Note the orientation of the locating pin.
- Loosen but do not remove the 2 retaining nuts.

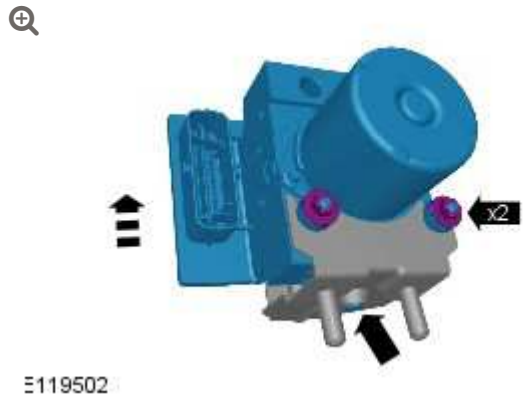

Torque: **9 Nm**

INSTALLATION

ℹ	All vehicles

1.

CAUTIONS:

- If accidentally dropped or knocked install a new ABS module.
- Make sure that these components are installed to the noted removal position.

NOTES:

- Make sure the ABS module locating grommets are correctly seated in the retaining bracket before installing the ABS module.
- Make sure the ABS module locating pin is correctly located in the grommet, and the 2 isolators are fully seated in the bracket slots.

To install, reverse the removal procedure.

Vehicles with standard brakes

2. Bleed the braking system.
   Refer to: Brake System Bleeding - Vehicles With: Standard Brakes (206-00, General Procedures).

Vehicles with high performance brakes

3. Bleed the braking system.
   Refer to: Brake System Bleeding - Vehicles With: High Performance Brakes (206-00, General Procedures).

ANTI-LOCK BRAKE SYSTEM (ABS) MODULE - TDV8 3.6L DIESEL/TDV8 4.4L DIESEL/V8 5.0L PETROL/V8 S/C 5.0L PETROL (G1225900)

REMOVAL AND INSTALLATION

70.65.49	HYDRAULIC CONTROL UNIT - RENEW	LEFT HAND DRIVE	0.9	USED WITHINS	+

REMOVAL

NOTES:

- The hydraulic control unit (HCU) mounted to the ABS module cannot be serviced separately. If the HCU requires replacement, then the ABS module must be replaced as a complete assembly.
- Removal steps in this procedure may contain installation details.

1. Disconnect the battery ground cable.
   Refer to: Specifications (414-00, Specifications).

2. **CAUTIONS:**

   - Make sure that the area around the component is clean and free of foreign material.
   - Make sure that all openings are sealed. Use new blanking caps.
   - If brake fluid is spilt on the paintwork, the affected area must be immediately washed down with cold water.

   NOTES:

   - Note the position of the components prior to removal.
   - Some fluid spillage is inevitable during this operation.

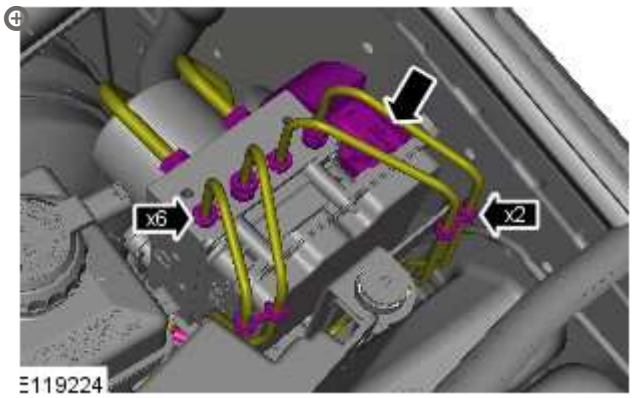

Torque: **18 Nm**

3.

NOTE:

Note the orientation of the locating pins.

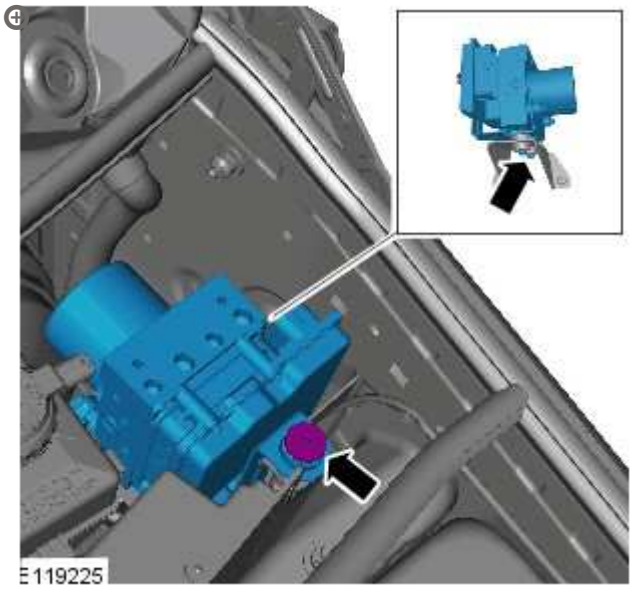

Torque: **9 Nm**

4.

NOTES:

- Do not disassemble further if the component is removed for access only.
- Note the orientation of the locating pin.
- Loosen but do not remove the 2 retaining nuts.

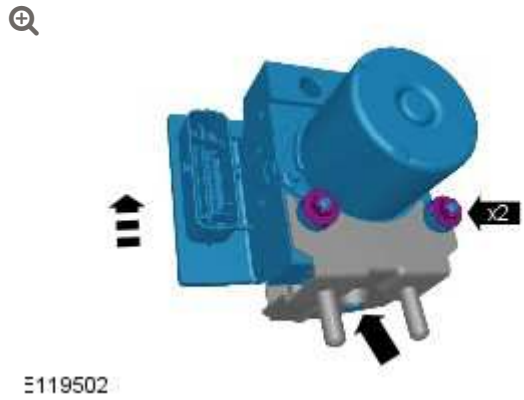

Torque: **9 Nm**

INSTALLATION

ℹ	All vehicles

1.

CAUTIONS:

- If accidentally dropped or knocked install a new ABS module.
- Make sure that these components are installed to the noted removal position.

NOTES:

- Make sure the ABS module locating grommets are correctly seated in the retaining bracket before installing the ABS module.
- Make sure the ABS module locating pin is correctly located in the grommet, and the 2 isolators are fully seated in the bracket slots.

To install, reverse the removal procedure.

Vehicles with standard brakes

2. Bleed the braking system.
   Refer to: Brake System Bleeding - Vehicles With: Standard Brakes (206-00, General Procedures).

Vehicles with high performance brakes

3. Bleed the braking system.
   Refer to: Brake System Bleeding - Vehicles With: High Performance Brakes (206-00, General Procedures).

2012.0 RANGE ROVER (LM), 206-09

ANTI-LOCK CONTROL - TRACTION CONTROL

DESCRIPTION AND OPERATION

COMPONENT LOCATION - SHEET 1 OF 2

NOTE:

RHD (right-hand drive) vehicle shown, LHD (left-hand drive) similar.

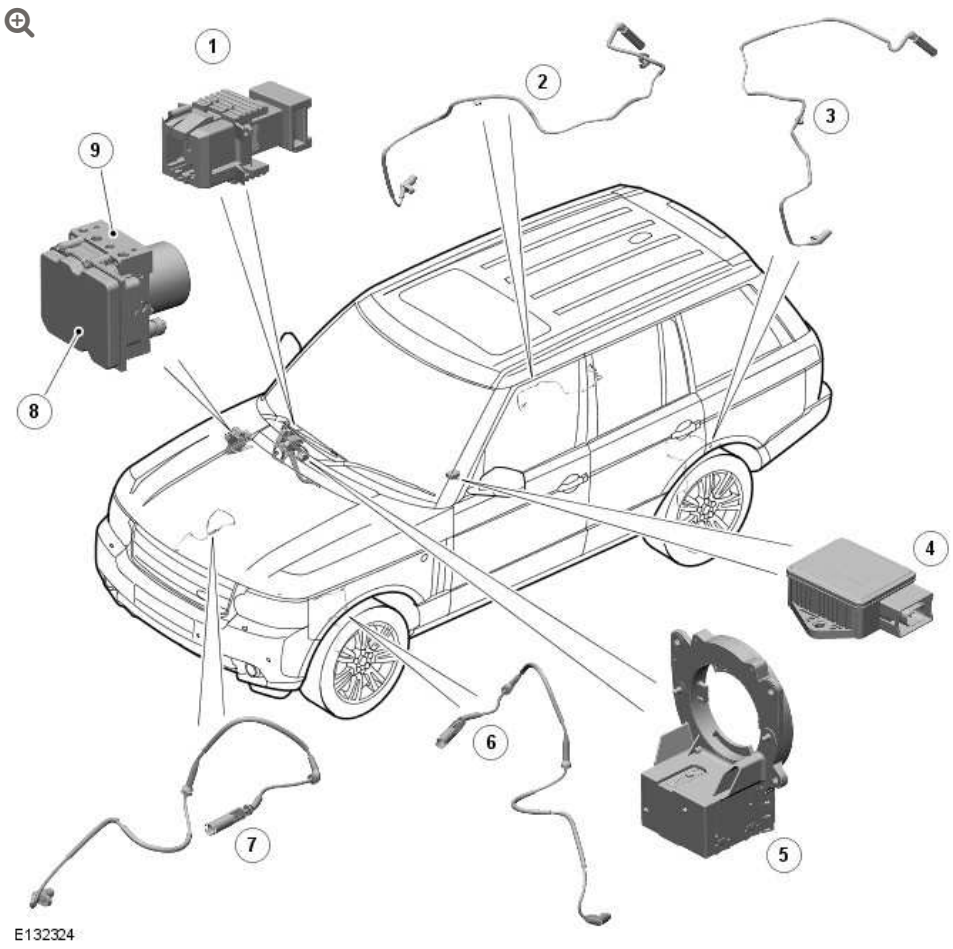

ITEM	DESCRIPTION
1	Stoplamp switch
2	RH (right-hand) rear wheel speed sensor
3	LH (left-hand) rear wheel speed sensor
4	Yaw rate and lateral acceleration sensor
5	Steering angle sensor
6	LH front wheel speed sensor
7	RH front wheel speed sensor
8	ABS (anti-lock brake system) module
9	HCU (hydraulic control unit)

COMPONENT LOCATION – SHEET 2 OF 2

NOTE:

LHD vehicle shown, RHD similar.

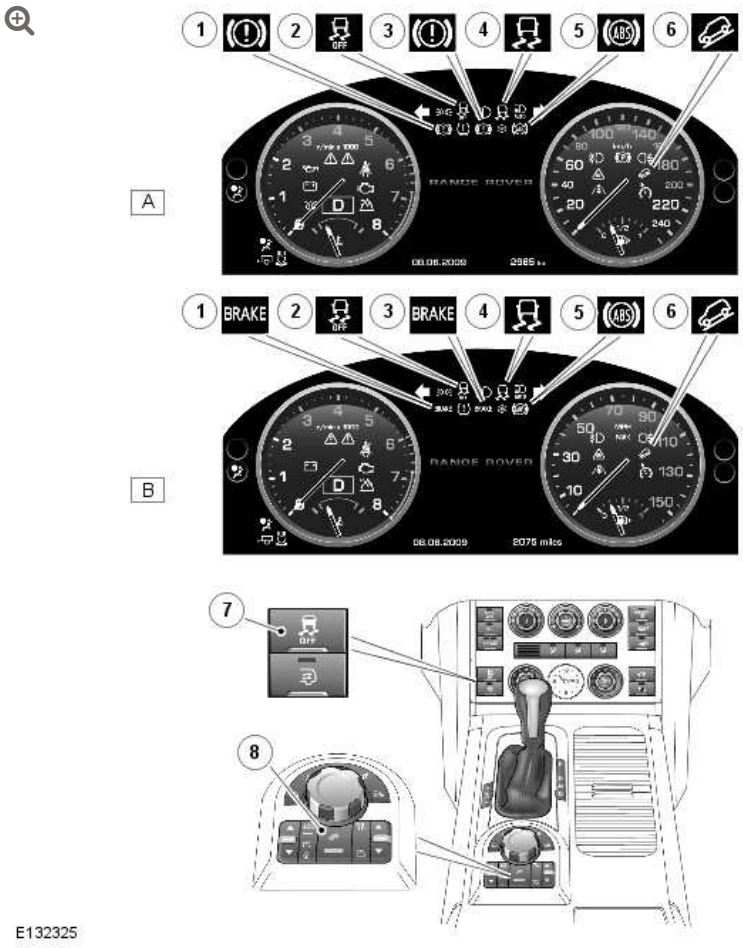

ITEM	DESCRIPTION
A	Instrument cluster - ROW markets
B	Instrument cluster - USA markets
1	Brake system warning indicator (amber)
2	DSC (dynamic stability control) OFF warning indicator (amber)
3	Brake system warning indicator (red)
4	DSC warning indicator (amber)

ITEM	DESCRIPTION
5	ABS warning indicator (amber)
6	HDC (hill descent control) warning indicator (green)
7	DSC switch
8	HDC switch

OVERVIEW

The anti-lock control - traction control system features a Bosch ESP®plus8.1 modulator, which is an integrated four-channel HCU and ABS module.

The ABS module is connected to the high speed CAN (controller area network) bus, and actively interacts with other vehicle system control modules and associated sensors to receive and transmit current vehicle operating information.

When required, the ABS module will actively intervene and operate the HCU during braking or vehicle maneuvers to correct the vehicle attitude, stability, traction or speed. During incidents of vehicle correction, the ABS module may also request the ECM (engine control module) to control engine power in order to further stabilize and correct the vehicle.

To provide full system functionality, the anti-lock control - traction control system comprises the following components:

- DSC switch.
- HDC switch.
- Four wheel speed sensors.
- Steering angle sensor.
- Yaw rate and lateral acceleration sensor.

- Stoplamp switch.
- Instrument cluster warning indicators.
- Integrated HCU and ABS module.

The anti-lock control - traction control system provides the following brake functions that are designed to assist the vehicle or aid the driver:

- ABS.
- ARM (active roll mitigation).
- CBC (corner brake control).
- DSC.
- EBD (electronic brake force distribution).
- Electronic brake prefill.
- ETC (electronic traction control).
- EBA (emergency brake assist).
- EDC (engine drag-torque control).
- EUC (enhanced understeer control).
- Gradient acceleration control.
- Gradient release control.
- HDC.
- Hill start assist.
- Trailer stability assist.

The HDC function is enabled either manually using the HDC switch, or automatically by the terrain response system, in the ignition on and engine running power modes. All of the other brake functions are automatically enabled in the ignition on and engine running

power modes. The DSC function can be selected off using the DSC switch.

DYNAMIC STABILITY CONTROL SWITCH

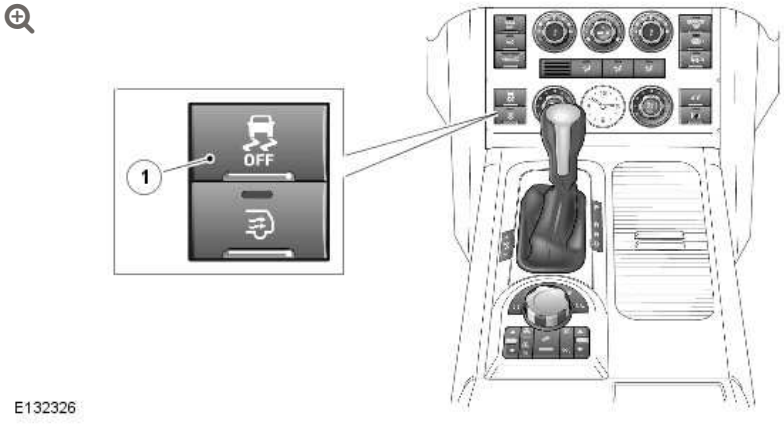

ITEM	DESCRIPTION
1	DSC switch

The DSC switch allows the DSC function to be selected off. Although Land Rover recommend that DSC is selected on for all normal driving conditions, it may be beneficial to de-select DSC to maximize traction under the following conditions:

- If the vehicle needs to be rocked out of a hollow or a soft surface.
- Driving on loose surfaces or with snow chains.
- Driving in deep sand, snow or mud.
- On tracks with deep longitudinal ruts.

The DSC switch is a non-latching switch installed in the center console switch pack. Pressing the DSC switch connects an ignition power feed to the ABS module. With the first press of the DSC switch, the ABS module disables the DSC functions. When the DSC switch is pressed again, the ABS module re-enables the DSC

functions. The DSC switch must be pressed for a minimum of 0.3 s for the ABS module to react. The DSC function is re-enabled at the beginning of each ignition cycle.

The status of the DSC switch selection is shown by the DSC OFF warning indicator. The DSC OFF warning indicator is extinguished while DSC is selected on, and continuously illuminated while DSC is selected off.

A DSC switch request to disable DSC is ignored by the ABS module if the air suspension system has failed, or is in off-road height at speeds above 60 km/h (37.5 mph).

To guard against incorrect operation or a broken switch, if the input from the DSC switch is held high for more than one minute, a DTC (diagnostic trouble code) is stored in the ABS module.

Even if DSC is deselected, driving maneuvers with extreme yaw or lateral acceleration may trigger DSC activity to assist vehicle stability.

HILL DESCENT CONTROL SWITCH

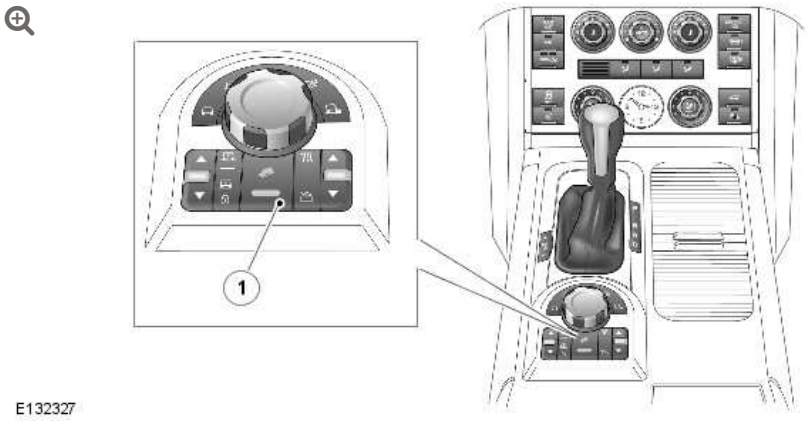

ITEM	DESCRIPTION
1	HDC switch

The HDC switch controls the selection of the HDC function.

The HDC switch is a non-latching switch installed on the floor console, to the rear of the gear selector lever. Pressing and releasing the HDC switch momentarily connects an ignition power feed to the ABS module. With the first press and release of the HDC switch, the ABS module enables operation of the HDC function. When the HDC switch is pressed and released again, the ABS module disables operation of the HDC function.

To guard against incorrect operation or a broken switch, if the switch is pressed for more than 10 seconds no change of state occurs. If the input from the HDC switch is held high for more than one minute, a DTC is stored in the ABS module.

WHEEL SPEED SENSORS

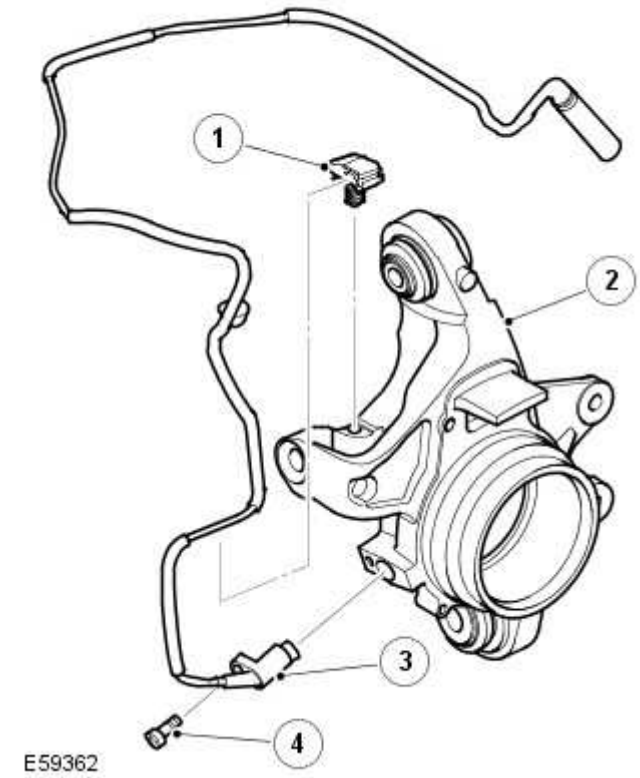

ITEM	DESCRIPTION
1	Cable clip

ITEM	DESCRIPTION
2	Hub assembly
3	Wheel speed sensor
4	Screw

An active wheel speed sensor is installed in each wheel hub to provide the ABS module with a rotational speed signal from each road wheel. The head of each wheel speed sensor is positioned close to a 48 tooth sensor ring on the outer diameter of the constant velocity joint of the drive halfshaft. A flying lead connects each sensor to the vehicle wiring.

The wheel speed sensors each have a power supply connection and a signal connection with the ABS module. When the ignition switch is on, the ABS module supplies power to the wheel speed sensors and monitors the return signals. Any rotation of the drive halfshafts induces current fluctuations in the return signals which are converted into individual wheel speeds and the overall vehicle speed by the ABS module.

The ABS module outputs the individual wheel speeds and the vehicle speed on the high speed CAN bus for use by other systems. The quality of the vehicle speed signal is also broadcast on the high speed CAN bus. If all wheel speed signals are available to calculate vehicle speed from, the quality of the vehicle speed signal is set to 'data calculated within specified accuracy'. If one or more wheel speed sensors is faulty, the quality of the vehicle speed signal is set to 'accuracy outside specification'.

The ABS module monitors the wheel speed sensor circuits for faults. If a fault is detected the ABS module stores a DTC and illuminates the appropriate warning indicators, depending on the system functions affected (DSC/ETC, ABS, EBA/EBD, HDC). A warning chime sounds and a related message is shown in the message center. For additional information, refer to: Information and Message Center

(413-08 Information and Message Center, Description and Operation).

Since the wheel speed sensors are active devices, a return signal is available when the road wheels are not turning, which enables the ABS module to check the sensors while the vehicle is stationary. In addition, the direction of travel of each wheel can be sensed. This information is broadcast on the high speed CAN bus for use by other systems.

STEERING ANGLE SENSOR

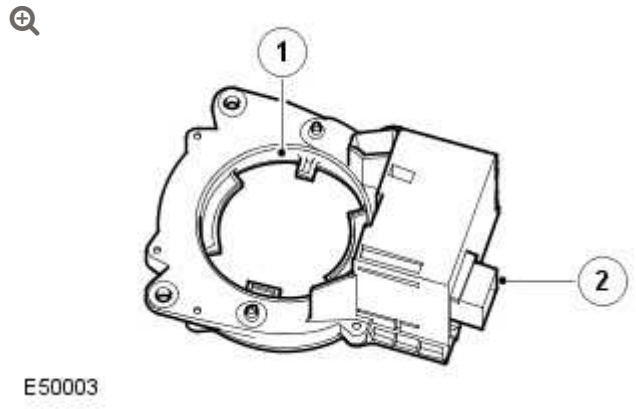

ITEM	DESCRIPTION
1	Gear wheel
2	Electrical connector

The steering angle sensor measures the steering wheel angle, and the rate of steering wheel angle speed. The measurements are output on the high speed CAN bus together with a quality factor signal, and are used by the ABS module and the rear differential control module for ARM, CBC and DSC operation.

The steering angle sensor is fixed to the pivot bracket of the steering column by three screws. A gear wheel in the steering angle sensor engages with a plastic drive collar fixed onto the lower shaft of the

column. Inside the steering angle sensor, the gear wheel meshes with a gear train containing magnets. A multipin electrical connector provides the interface between the vehicle wiring and integrated circuits in the steering angle sensor.

The steering angle sensor operates with the MR (magneto resistive) effect to evaluate the direction of magnetic fields, and measure the angular position of the lower shaft to provide the steering wheel angle. When the steering wheel turns, the steering column lower shaft rotates the gear wheel within the steering angle sensor. The gear wheel drives the gear train and rotates the magnets located on the gears. The direction of the magnetic field is constantly monitored by the steering angle sensor and is converted into a steering wheel angle, and steering wheel angle speed.

The steering angle sensor performs a plausibility check of the steering wheel angle each time the following conditions co-exist:

- The vehicle is traveling in a straight line.
- The vehicle speed is between 20 and 25 km/h (12.5 and 15.6 mph).
- The transfer box is in high range.
- The brake pedal is not pressed.
- There is no ABS, DSC or ETC activity.

The steering angle sensor uses inputs of wheel speed, yaw rate and lateral acceleration to determine when the vehicle is traveling in a straight line. When all of the conditions co-exist, the steering angle sensor checks the steering angle is between 0 ± 15°. If the steering angle is outside the limits on two successive checks, the steering angle sensor changes the quality factor signal to 'outside specification' for the remainder of the ignition cycle and stores a DTC. At the beginning of each ignition cycle the quality factor signal is reset to 'within specified accuracy'.

The status of the steering angle sensor is able to be determined using Land Rover approved diagnostic equipment.

If the steering angle sensor is renewed, the new sensor must be calibrated using Land Rover approved diagnostic equipment. The steering angle sensor must also be re-calibrated any time it is disturbed from the steering column, or if the upper and lower steering columns are separated.

YAW RATE AND LATERAL ACCELERATION SENSOR



E132328

The yaw rate and lateral acceleration sensor is located beneath the floor console and provides information of vehicle yaw rate and lateral acceleration to the ABS module. The sensor is internally damped to isolate it from body vibrations and is secured to the transmission tunnel with two bolts.

When the ignition is on, the yaw rate and lateral acceleration sensor receives a power feed from the CJB (central junction box). Yaw rate and lateral acceleration values are transmitted to the ABS module on a private high speed CAN bus. In addition to using the inputs for brake control functions, the ABS module also broadcasts the yaw rate and lateral acceleration values on the vehicle high speed CAN bus for use by other systems.

The ABS module monitors the yaw rate and lateral acceleration sensor for faults and can be interrogated using Land Rover approved diagnostic equipment. If a fault is detected, the ABS module stores a related DTC and transmits a high speed CAN bus signal to the instrument cluster to illuminate the DSC, HDC and brake warning indicators. The instrument cluster will also sound a warning chime and display a DSC fault message in the message center.
For additional information, refer to: Information and Message Center (413-08 Information and Message Center, Description and Operation).

STOPLAMP SWITCH

The stoplamp switch is mounted in the brake pedal bracket and operated by the brake pedal. The stoplamp switch is a Hall effect switch with dual status outputs. Both of the outputs are supplied to the ECM. One of the outputs is also supplied to the CJB, for operation of the stoplamps. The ECM broadcasts the status of the stoplamp switch on the high speed CAN for use by other systems.

Power for the stoplamp switch is provided by an ignition feed from the CJB. The power circuit is completed by a ground connection from the stoplamp switch to a ground header on the body.

When the brake pedal is not pressed, the outputs from the stoplamp switch are low, between 0 and 2 V. When the brake pedal is pressed the outputs are pulled high to between 8 V and battery voltage.

WARNING INDICATORS

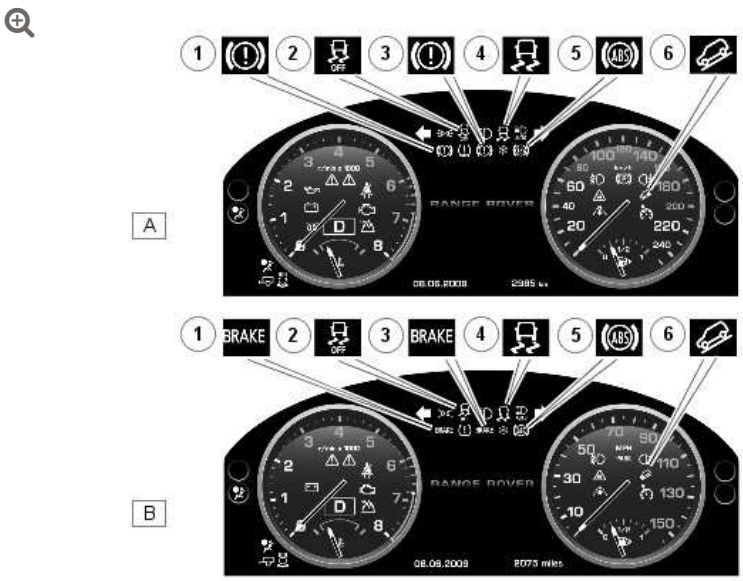

ITEM	DESCRIPTION
1	Brake system warning indicator (amber)
2	DSC OFF warning indicator (amber)
3	Brake system warning indicator (red)
4	DSC warning indicator (amber)
5	ABS warning indicator (amber)
6	HDC warning indicator (green)

The instrument cluster contains two types of warning indicator to display the operating status of the selected anti-lock control/traction control functions. The warning indicators provide a visual notification of either a system warning or system information to the driver.

HYDRAULIC CONTROL UNIT

The HCU is a four-channel unit that modulates the supply of hydraulic pressure to the brakes under control of the ABS module.

The HCU is installed in the engine compartment, on three mounting bushes attached to the driver side inner fender. Hydraulic pipes connect the HCU to the master cylinder and the brake calipers. For additional information, refer to: Hydraulic Brake Actuation (206-06 Hydraulic Brake Actuation, Description and Operation).

The primary and secondary outlets of the master cylinder are connected to the primary and secondary circuits within the HCU. The primary circuit in the HCU has separate outlet ports to the front brakes. The secondary circuit in the HCU has separate outlet ports to the rear brakes. Each of the circuits in the HCU contains the following components to control the supply of hydraulic pressure to the brakes:

- A normally open, solenoid operated, pilot valve, to enable active braking.
- A normally closed, solenoid operated, priming valve, to connect the brake fluid reservoir to the return pump during active braking.
- A return pump to generate hydraulic pressure for active braking, and return brake fluid to the reservoir.
- Normally open, solenoid operated, inlet valves and normally closed, solenoid operated, outlet valves, to modulate the hydraulic pressure in the individual brakes.
- An accumulator and a relief valve to allow the fast release of pressure from the brakes.
- Filters to protect the components from contamination.

The primary circuit also incorporates a pressure sensor to provide the ABS module with a hydraulic pressure signal.

Contact pins on the HCU mate with contacts on the ABS module to provide the electrical connections from the ABS module to the return pump motor and the pressure sensor. The solenoids that operate the valves are installed in the ABS module.

A replacement HCU is supplied pre-filled. After installation on the vehicle, the Land Rover approved diagnostic system must be used to operate the solenoid valves and the return pump to ensure correct bleeding of the HCU and brake circuits.

Schematic of Hydraulic Control Unit

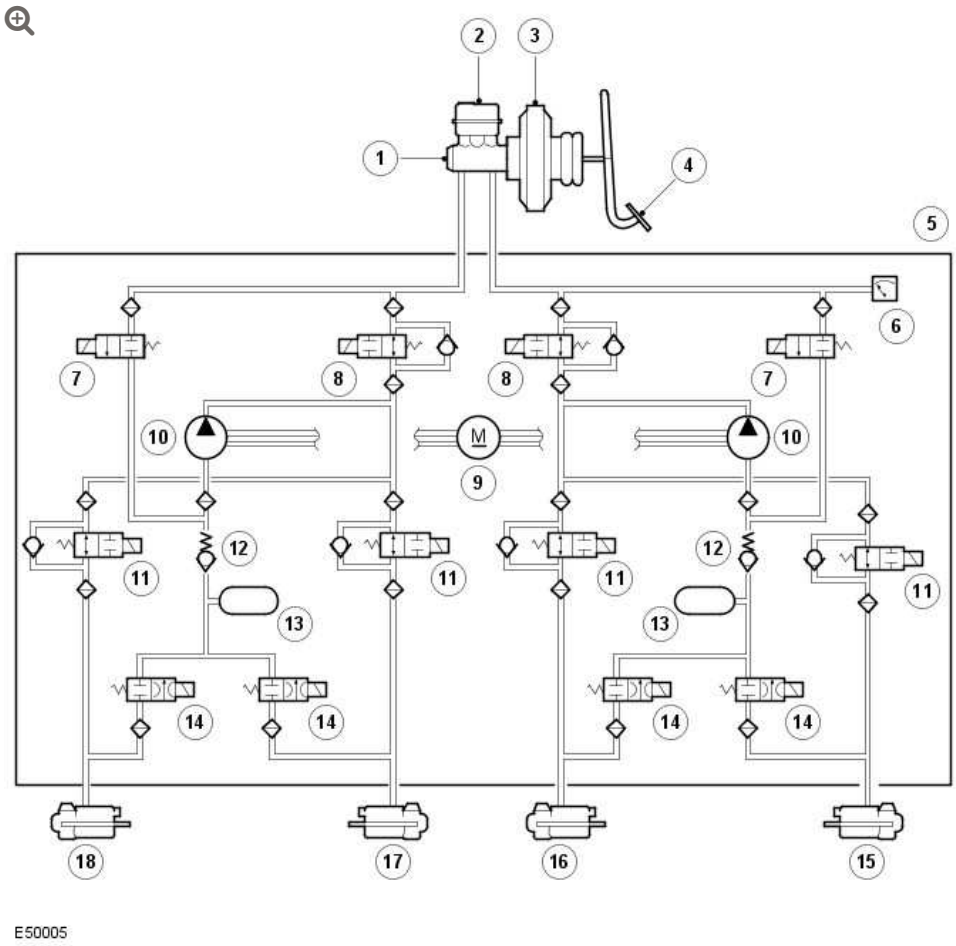

ITEM	DESCRIPTION
1	Master cylinder
2	Reservoir
3	Brake booster
4	Brake pedal
5	HCU
6	Pressure sensor
7	Priming valve

ITEM	DESCRIPTION
8	Pilot valve
9	Return pump motor
10	Return pump
11	Inlet valve
12	Relief valve
13	Accumulator
14	Outlet valve
15	Left front brake
16	Right front brake
17	Right rear brake
18	Left rear brake

The HCU has three operating modes: Normal/EBD, ABS braking and active braking.

NORMAL BRAKING/ELECTRONIC BRAKE FORCE DISTRIBUTION MODE

Initially, all of the solenoid operated valves are de-energized. Operating the brake pedal produces a corresponding increase or decrease of pressure in the brakes, through the open pilot valves and inlet valves. If the ABS module determines that EBD is necessary, it energizes the inlet valves for the brakes of the trailing axle, to isolate the brakes from any further increase in hydraulic pressure.

ABS BRAKING MODE

If the ABS module determines that ABS braking is necessary, it energizes the inlet and outlet valves of the related brake and starts the return pump. The inlet valve closes to isolate the brake from pressurized fluid; the outlet valve opens to release pressure from the brake into the accumulator and the return pump circuit. The reduced pressure allows the wheel to accelerate. The ABS module then

operates the inlet and outlet valves to modulate the pressure in the brake to apply the maximum braking effort without locking the wheel. Control of the valves for each wheel takes place individually.

ACTIVE BRAKING MODE

The active braking mode is used to generate and control hydraulic pressure to the brakes for functions other than ABS braking, for example: DSC, EBA, ETC, HDC and dynamic application of the parking brake.

For active braking, the ABS module energizes the pilot valves and priming valves, starts the return pump and energizes all of the inlet valves. Brake fluid, drawn from the reservoir through the master cylinder and priming valve, is pressurized by the return pump and supplied to the inlet valves. The ABS module then operates the inlet valves and outlet valves, as required, to modulate the pressure in the individual brakes. Some noise may be generated during active braking.

ANTI-LOCK BRAKE SYSTEM MODULE

The ABS module controls the brake functions using the HCU to modulate hydraulic pressure to the individual wheel brakes.

The ABS module is attached to the HCU, on the driver side inner fender in the engine compartment. A multipin connector provides the electrical interface between the ABS module and the vehicle wiring.

CONTROL DIAGRAM

NOTE:

A = Hardwired; D = High speed CAN bus; J = Diagnostic ISO 9141 K line; V = Private CAN bus.

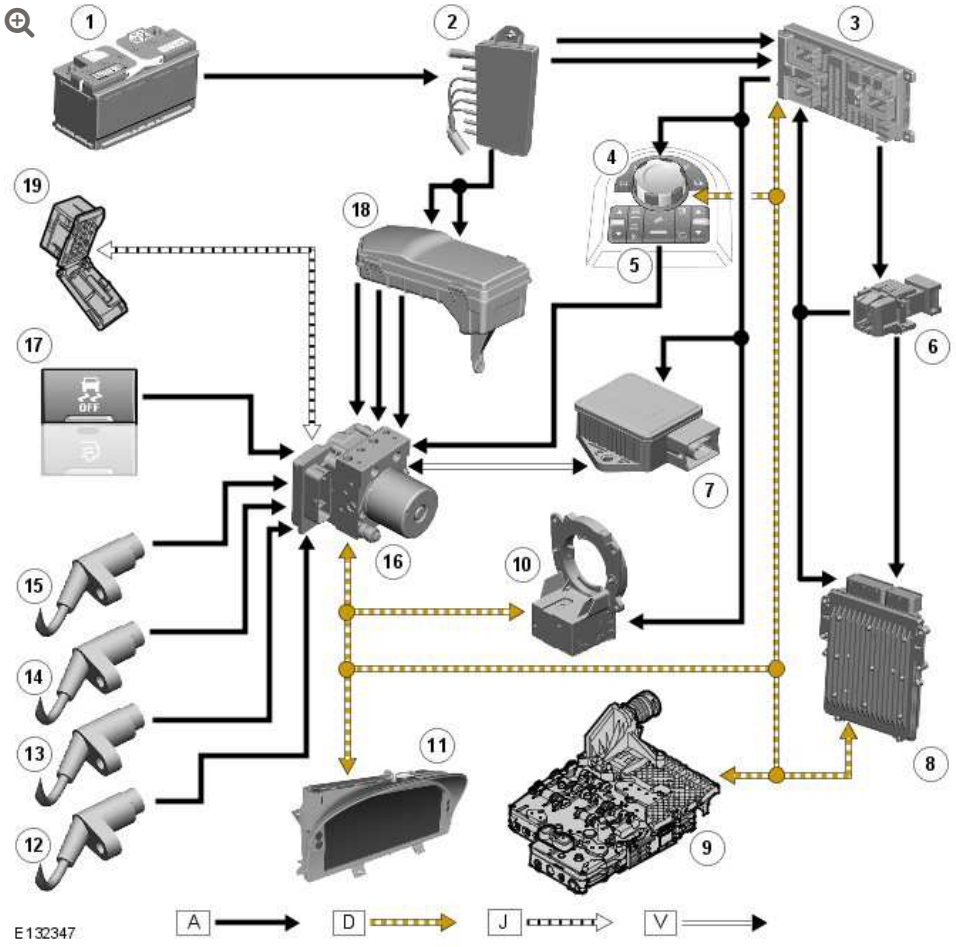

ITEM	DESCRIPTION
1	Battery
2	BJB (battery junction box)
3	CJB
4	Terrain response rotary control and control module
5	HDC switch
6	Stoplamp switch
7	Yaw-rate and lateral acceleration sensor

ITEM	DESCRIPTION
8	ECM
9	TCM (transmission control module)
10	Steering angle sensor
11	Instrument cluster
12	Wheel speed sensor
13	Wheel speed sensor
14	Wheel speed sensor
15	Wheel speed sensor
16	ABS module
17	DSC switch
18	EJB (engine junction box)
19	Diagnostic socket

OPERATION

ANTI-LOCK BRAKE SYSTEM

ABS controls the speed of all road wheels to ensure optimum wheel slip when braking at the adhesion limit. This prevents the wheels from locking in order to retain effective steering control of the vehicle.

On the front axle, the brake pressure is modulated separately for each wheel. On the rear axle, brake pressure is modulated by select low. Select low applies the same pressure to both rear brakes, with the pressure level being determined by the wheel on the lower friction surface. This maintains rear stability on split friction surfaces.

ACTIVE ROLL MITIGATION

The ARM function uses the brake system and engine torque control to attempt to restore vehicle stability if the vehicle is forced into such a harsh manoeuver that it risks tipping over.

The ABS module monitors driver inputs and vehicle behavior using various powertrain signals and inputs from the wheel speed sensors, steering angle sensor and the yaw-rate and lateral acceleration sensor. These are compared with modeled behavior and, if vehicle behavior reaches a given risk level, the ABS module initiates a reduction in engine power, or brakes one or more wheels sufficiently to correct the vehicle stability and assist the driver remain in control.

While the ignition is on, ARM is permanently enabled, even when DSC is selected off.

CORNER BRAKE CONTROL

CBC influences the brake pressures, below the DSC and ABS thresholds, to counteract the yawing moment produced when braking in a corner. CBC produces a correction torque by limiting the brake pressure on one side of the vehicle.

DYNAMIC STABILITY CONTROL

DSC uses the brakes and engine torque control to help maintain the lateral stability of the vehicle. While the ignition is on the DSC function is permanently enabled unless selected off by the DSC switch. Even if DSC is deselected, driving maneuvers with extreme yaw or lateral acceleration may trigger DSC activity to assist vehicle stability.

DSC enhances driving safety in abrupt maneuvers and in understeer or oversteer situations that may occur in a bend. The ABS module monitors the yaw-rate and lateral acceleration of the vehicle, and the steering input, then selectively applies individual brakes and signals for engine torque adjustments to reduce understeer or oversteer.

In general: in an understeering situation, the inner wheels are braked to counteract the yaw movement towards the outer edge of the bend. In an oversteering situation, the outer wheels are braked to prevent the rear end of the vehicle from pushing towards the outer edge of the bend.

The ABS module monitors the tracking stability of the vehicle using inputs from the wheel speed sensors, the steering angle sensor and the yaw-rate and lateral acceleration sensor. The tracking stability is compared with stored target data and, whenever the tracking stability deviates from the target data, the ABS module intervenes by applying the appropriate brakes. When the DSC function is active, the ABS module also signals the TCM to prevent gear shifts, and the instrument cluster to flash the DSC warning indicator.

If necessary, the ABS module also signals:

- The ECM, to reduce engine torque.
- The transfer box control module, to adjust the locking torque of the center differential.
- The active on-demand coupling module, to adjust the locking torque of the rear differential.

The DSC function overrides the differential locking torque requests from the terrain response system.

If DSC is selected off, a DSC system off message is displayed in the message center.
For additional information, refer to: Information and Message Center (413-08 Information and Message Center, Description and Operation).

ELECTRONIC BRAKE FORCE DISTRIBUTION

EBD limits the brake pressure applied to the rear wheels. When the brakes are applied, the weight transfer of the vehicle reduces the

adhesion of the rear wheels on the road surface. This may cause the rear wheels to slip and make the vehicle unstable.

EBD uses the ABS hardware to automatically optimize the pressure of the rear brakes, below the point where ABS intervention is normally invoked. Only the rear wheels are under EBD control.

ELECTRONIC BRAKE PREFILL

Electronic brake prefill senses any rapid throttle lift off, activating a small brake hydraulic pressure build-up of approximately 3 to 5 bar (43.5 to 72.5 lbf/in^2) in anticipation of the brakes being applied. This gives a quicker brake pedal response and consequently slightly shorter stopping distances.

When the ABS module detects rapid throttle lift off (from the signals received from the ECM over the high speed CAN bus), it controls the HCU to apply a low brake pressure to assist in a quicker brake application.

ELECTRONIC TRACTION CONTROL

ETC attempts to optimize forward traction by reducing engine torque or braking a spinning wheel until traction is restored.

ETC is activated if an individual wheel speed is above that of the vehicle reference speed (positive slip) and the brake pedal is not pressed. The spinning wheel is braked, allowing the excess torque to be transmitted to the non spinning wheels through the drive line. If necessary, the ABS module also transmits a high speed CAN bus message to the ECM requesting a reduction in engine torque.

Torque reduction requests are for either a slow or fast response. A slow response requests a reduction of throttle angle; a fast response requests an ignition cut-off.

When the DSC function is selected off with the DSC switch, the engine torque reduction feature is disabled.

When the ETC function is active the ABS module also signals the TCM to prevent gear shifts.

EMERGENCY BRAKE ASSIST

EBA assists the driver during emergency braking situations by automatically maximizing the braking effort. There are two situations when the ABS module will invoke EBA:

- When the brake pedal is pressed very suddenly.
- When the brake pedal is pressed hard enough to bring the front brakes into ABS operation.

When the brake pedal is pressed very suddenly, the ABS module increases the hydraulic pressure to all of the brakes until the threshold for ABS operation is reached. This applies the maximum braking effort for the available traction. The ABS module monitors for the sudden application of the brakes using the stoplamp switch status broadcast on the high speed CAN by the ECM, and from the pressure sensor within the HCU. With the brake pedal pressed, if the rate of increase of hydraulic pressure exceeds the predetermined limit, the ABS module invokes emergency braking.

When the brake pedal is pressed hard enough to bring the front brakes into ABS operation, the ABS module increases the hydraulic pressure to the rear brakes up to the ABS threshold.

EBA operation continues until the driver releases the brake pedal enough for the hydraulic pressure in the HCU to fall below a pre-determined threshold value stored in the ABS module.

ENGINE DRAG-TORQUE CONTROL

EDC prevents wheel slip caused by any of the following:

- A sudden decrease in engine torque when the accelerator is suddenly released.
- A downshift using the CommandShift™.

When the ABS module detects the onset of wheel slip without the brakes being applied, it transmits a message to the ECM via the high speed CAN bus to request a momentary increase in engine torque.

ENHANCED UNDERSTEER CONTROL

Understeer logic control monitors the vehicle for understeer by comparing signals from the yaw rate and lateral acceleration sensor with signals from the steering angle sensor and wheel speed sensors.

When the ABS module detects the onset of understeer, it signals the ECM via the high speed CAN bus to request a decrease in engine torque. If required the ABS module will control the HCU to apply brake pressure to the inside rear wheel to correct the understeer. If the vehicle continues to understeer, enhanced understeer control is activated and uses multiple brakes (maximum of three brakes) to rapidly reduce the vehicle speed.

GRADIENT ACCELERATION CONTROL

Gradient acceleration control is an automatic feature and is always available when HDC is not selected.

When HDC is not selected, gradient acceleration control will intervene to limit downhill acceleration on a steep descent.

The feature uses generated brake pressure to control acceleration in situations where the driver could lose control of the vehicle on a steep incline.

Gradient acceleration control keeps the vehicle to a speed and throttle pedal dependant acceleration limit when the vehicle is moving in the intended direction of travel, for example:

- Descending an incline forwards, with D (drive) selected.
- Descending an incline backwards, with R (reverse) selected.

When the vehicle is moving against the intended direction of travel, for example: descending a slope, but facing uphill with D selected, gradient acceleration control will prevent the vehicle accelerating above 5 km/h (3 mph) for up to 20-30 seconds to aid the driver in re-establishing control of the vehicle.

GRADIENT RELEASE CONTROL

Gradient release control is an automatic feature which is always available when HDC is selected.

If the vehicle is brought to a standstill on a slope using the foot brake, gradient release control will become active (except in the terrain response, sand program). Subsequently, when the foot brake is released gradient release control will automatically delay and graduate the brake release. This allows time for the foot to be moved from the brake pedal to the accelerator pedal so that the vehicle can move smoothly away.

When descending a hill, a similar brake hold and gradual release is employed to provide a smooth transition into HDC. Gradient release control operates in forward and reverse gears and requires no driver intervention.

HILL DESCENT CONTROL

HDC uses brake intervention to control vehicle speed and acceleration during low speed descents in off-road and low grip on-road conditions. Generally, equal pressure is applied to all four brakes, but pressure to individual brakes can be modified by the ABS and DSC functions to retain stability. Selection of the HDC function is controlled by the HDC switch and the terrain response rotary control located on the floor console. HDC operates in both high and low ranges, at vehicle speeds up to 50 km/h (31.3 mph).

WARNING:

Incorrect use of the HDC function may compromise the stability of the vehicle, resulting in a dangerous and uncontrolled hill descent. Driving with the transmission in neutral while HDC is active will prevent engine braking from assisting the vehicle. The brakes will overheat and induce the HDC fade out strategy. In this condition there will be no control over the vehicle during a descent.

NOTE:

With the HDC function selected, HDC is operative even when the transmission is in the neutral. It is not recommended to drive the vehicle further than is absolutely necessary with HDC selected and the transmission in neutral.

HDC may be used in D, R and CommandShift 1 in high range, and in D, R and all CommandShift gears in low range. When in D, the TCM will automatically select the most appropriate gear.

HDC can be selected at speeds up to 80 km/h (50 mph), but will only be enabled at speeds below 50 km/h (31.3 mph). When HDC is selected:

- At speeds up to 50 km/h (31.3 mph), the HDC information warning indicator is permanently illuminated if a valid gear is selected.
- At speeds from between 50 to 80 km/h (31 to 50 mph) the HDC information warning indicator flashes and a message advising that the speed is too high is displayed in the message center. If the HDC switch is pressed while vehicle speed is more than 80 km/h (50 mph), the HDC information warning indicator will not illuminate and HDC will not be selected.

- If the speed increases to 80 km/h (50 mph), the HDC function is switched off, the information warning indicator is extinguished, a warning chime sounds and a message advising that HDC has been switched off is displayed in the message center.

When HDC is enabled, the ABS module calculates a target deceleration value by comparing the set speed to the actual vehicle speed. The ABS module then operates the HCU in the active braking mode as required to achieve and maintain the target speed.

During active braking for HDC, the ABS module sends a high speed CAN message to the CJB to operate the stoplamps.
For additional information, refer to: Exterior Lighting (417-01 Exterior Lighting, Description and Operation).

Applying the foot brake during active braking may result in a pulse through the brake pedal.

The target speed varies between minimum and maximum values for each gear and transmission range, depending on driver input with the accelerator pedal. If the accelerator pedal is not operated, the ABS module adopts a default target speed.

Low Range Target Speeds

TARGET SPEED	SPEED, KM/H (MPH)	
	GEARS 1, R	GEARS D, 2 TO 6
Default	3.5 (2.19)	6 (3.75)
Minimum	3.5 (2.19)	3.5 (2.19)
Maximum	20 (12.5)	20 (12.5)

High Range Target Speeds

TARGET SPEED	SPEED, KM/H (MPH)	
	GEARS 1, R	GEARS D, 2 TO 6

TARGET SPEED	SPEED, KM/H (MPH)	
	GEARS 1, R	GEARS D, 2 TO 6
Default	6 (3.75)	10 (6.25)
Minimum	6 (3.75)	6 (3.75)
Maximum	20 (12.5)	20 (12.5)

As well as varying the target speed with the accelerator pedal, the target speed may also be varied by pressing the speed control '+' and '-' buttons (where fitted). For additional information, refer to:

Speed Control (310-03A, Description and Operation),
Speed Control (310-03 Speed Control - V8 5.0L Petrol/V8 S/C 5.0L Petrol, 5.0L, Description and Operation).

During changes of target speed, the ABS module limits deceleration and acceleration to -0.5 m/s2 (-1.65 ft/s²) and +0.5 m/s2 (+1.65 ft/s²) respectively.

To provide a safe transition from active braking to brakes off, the ABS module invokes a fade out strategy that gradually releases the braking effort during active braking. The fade out strategy occurs if any of the following conditions are detected during active braking:

- HDC selected off with the HDC switch.
- Failure of a component used by HDC, but not critical to the fade out function.
- Accelerator pedal pressed when transmission is in neutral.
- Brake overheat.

If fade out is invoked because of deselection or component failure, the HDC function is cancelled by the ABS module. If fade out is invoked because the accelerator pedal is pressed with the transmission in neutral, or because of brake overheat, the HDC

function remains in standby and resumes operation when the accelerator pedal is released or the brakes have cooled.

The fade out strategy increases the target speed, at a constant acceleration rate of 0.5 m/s² (1.65 ft/s²), until the maximum target speed is reached or until no active braking is required for 0.5 s. If the accelerator pedal is positioned within the range that influences target speed, the acceleration rate is increased to 1.0 m/s² (3.3 ft/s²).

When fade out is invoked because of component failure, a warning chime is sounded, the HDC information warning indicator is extinguished and a message advising there is a fault is displayed in the message center.

When fade out is invoked because of brake overheat, a message advising that HDC is temporarily unavailable is displayed. At the end of fade out, the HDC information warning indicator flashes. The message is displayed, while HDC remains selected, until the brakes have cooled.

To monitor for brake overheat, the ABS module monitors the amount of braking activity and, from this, estimates the temperature of each brake. If the estimated temperature of any brake exceeds a preset limit, the ABS module invokes the fade out strategy. After the fade out cycle, the HDC function is re-enabled when the ABS module estimates that all of the brake temperatures are at less than 64% of the temperature limit.

When HDC is selected off, the instrument cluster message center displays a system off message.

HILL START ASSIST

Hill start assist is an automatic feature that operates in a similar manner to gradient release control, but does not require HDC to be active. The feature is not driver selectable and there is no indication to the driver when in operation.

On steep slopes, hill start assist will hold a portion of the driver generated brake pressure for a short time to allow the driver to move their foot from the brake pedal to the throttle pedal without the vehicle rolling back.

The system will release the brake pressure in a controlled manner, either after the timer has expired or if the driver has generated sufficient drive-torque to move the vehicle forward up the hill.

The timer function is controlled by the ECM and transmitted to the ABS module on the high speed CAN bus.

TRAILER STABILITY ASSIST

When the trailer electrical socket is connected, trailer stability assist operates automatically to enhance the existing DSC and terrain response functions of the vehicle when towing. The system detects sway movements caused by trailer oscillations at speeds in excess of 60 km/h (37 mph) and acts to eliminate them. It does this through braking and engine management. Braking management counterbalances the sway movement through symmetric and asymmetric braking, thereby slowing the vehicle and eliminating the oscillations. Engine management adapts engine torque output to support the braking management in stabilizing the vehicle and trailer.

Typical conditions when sway can occur include:

- Changing highway lanes.
- Traversing a lengthy bend.
- Acceleration.
- Braking.

The capability of trailer stability assist to respond early to the beginning of trailer-sway makes the system almost unnoticeable under normal driving conditions and keeps the vehicle and trailer

under safe control. Trailer stability assist requires no input from the driver and operates up to the maximum vehicle speed.

Trailer stability assist will not operate while DSC is switched off.

ANTI-LOCK CONTROL - TRACTION CONTROL

DIAGNOSIS AND TESTING

PRINCIPLE OF OPERATION

For additional information on the Anti-Lock Control - Traction Control system, refer to the relevant Description and Operation section in the workshop manual.

INSPECTION AND VERIFICATION

CAUTION:

Diagnosis by substitution from a donor vehicle is **NOT** acceptable. Substitution of control modules does not guarantee confirmation of a fault, and may also cause additional faults in the vehicle being tested and/or the donor vehicle.

1. Verify the customer concern.
2. Visually inspect for obvious mechanical or electrical faults.

Visual Inspection

MECHANICAL	ELECTRICAL
▪ Tire size, condition and installation ▪ Wheel speed sensor condition and installation ▪ Steering Angle Sensor (SAS) condition and installation ▪ Yaw rate sensor and accelerometer condition and installation ▪ Hydraulic control unit (with attached ABS module) condition and installation	▪ Fuses ▪ Harnesses and connectors ▪ Warning lamp operation ▪ Wheel speed sensors ▪ Central Junction Box ▪ HDC switch ▪ DSC switch ▪ Stop lamp switch ▪ Yaw rate sensor and accelerometer ▪ Steering Angle Sensor (SAS) ▪ ABS module ▪ Controller Area Network (CAN) circuits

3. If an obvious cause for an observed or reported concern is found, correct the cause (if possible) before proceeding to the next step.

4. If the cause is not visually evident, check for Diagnostic Trouble Codes (DTCs) and refer to the DTC Index.

DTC INDEX

For a list of Diagnostic Trouble Codes (DTCs) that could be logged on this vehicle, please refer to Section 100-00. REFER to: Diagnostic Trouble Code (DTC) Index - DTC: Module Name: Anti-Lock Braking System (100-00, Description and Operation).

ANTI-LOCK CONTROL - TRACTION CONTROL

FRONT WHEEL SPEED SENSOR (G1226031)

REMOVAL AND INSTALLATION

70.65.30	SENSOR AND HARNESS - FRONT WHEEL - EACH - RENEW	ALL DERIVATIVES	0.5	USED WITHINS	+

REMOVAL

NOTE:

Removal steps in this procedure may contain installation details.

1. Disconnect the battery ground cable.
   For additional information, refer to: Specifications (414-00, Specifications).

2.

WARNING:

Make sure to support the vehicle with axle stands.

Raise and support the vehicle.

3. Remove the front wheel and tire.
   - TORQUE: 140 Nm

4. **CAUTION:**

   Before disconnecting or removing the components, ensure the area around the joint faces and connections are clean and dry. Plug open connections to prevent contamination.

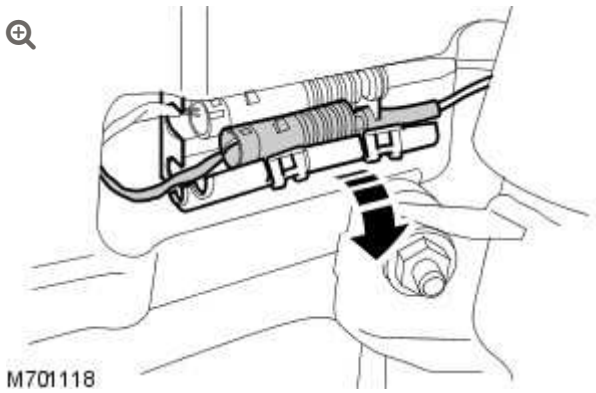

Disconnect the wheel speed sensor electrical connector.

5.

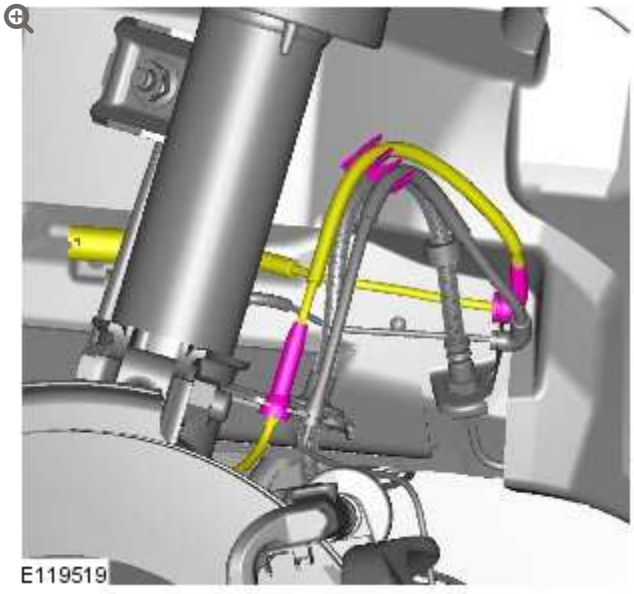

6.

CAUTIONS:

- Make sure that the component is clean, free of foreign material and lubricant.
- Make sure that the mating faces are clean and free of foreign material.
- Make sure that the sensor tip is clean and free of foreign material.

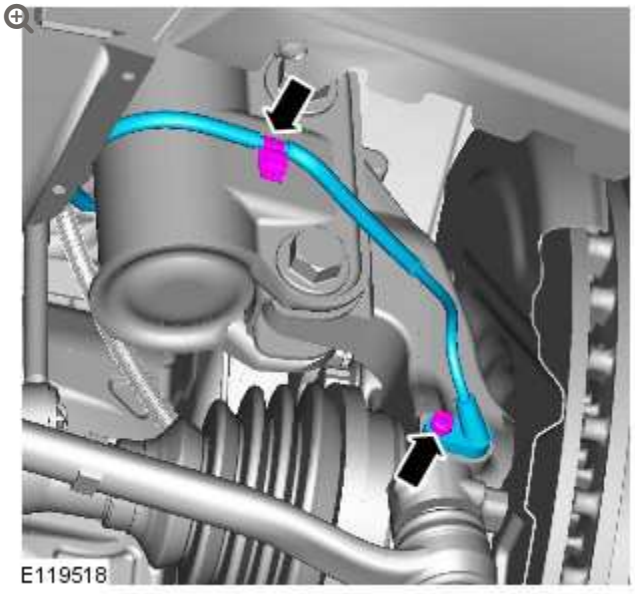

Remove the front wheel speed sensor.

- TORQUE: 8 Nm

INSTALLATION

1. To install, reverse the removal procedure.
   - Using the approved Land Rover diagnostic system, clear the fault codes from the ABS ECU.

ANTI-LOCK CONTROL - TRACTION CONTROL

REAR WHEEL SPEED SENSOR (G1226032)

REMOVAL AND INSTALLATION

70.65.31	SENSOR AND HARNESS - REAR WHEEL - EACH - RENEW	ALL DERIVATIVES	0.6	USED WITHINS	+

REMOVAL

NOTE:

Removal steps in this procedure may contain installation details.

1. Disconnect the battery ground cable.
   For additional information, refer to: Specifications (414-00 Charging System - General Information, Specifications).

2.

WARNING:

Make sure to support the vehicle with axle stands.

Raise and support the vehicle.

3. For additional information, refer to: Rear Fender Splash Shield (501-08 Exterior Trim and Ornamentation, Removal and Installation).

4.

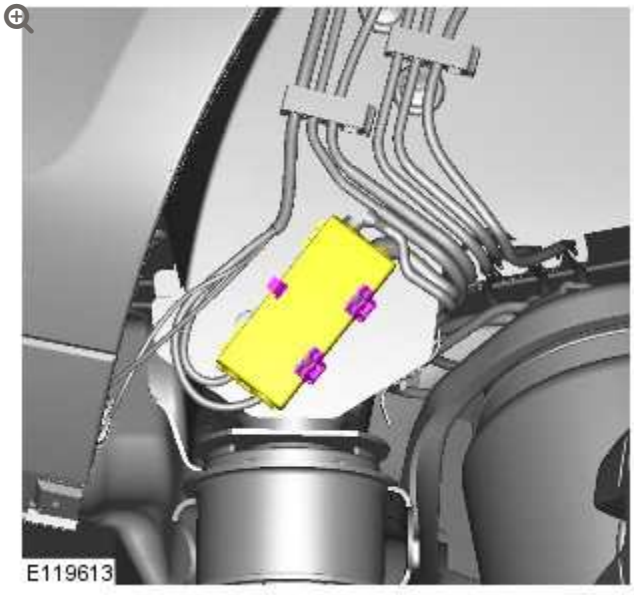

5. **CAUTION:**

Before disconnecting or removing the components, ensure the area around the joint faces and connections are clean and dry. Plug open connections to prevent contamination.

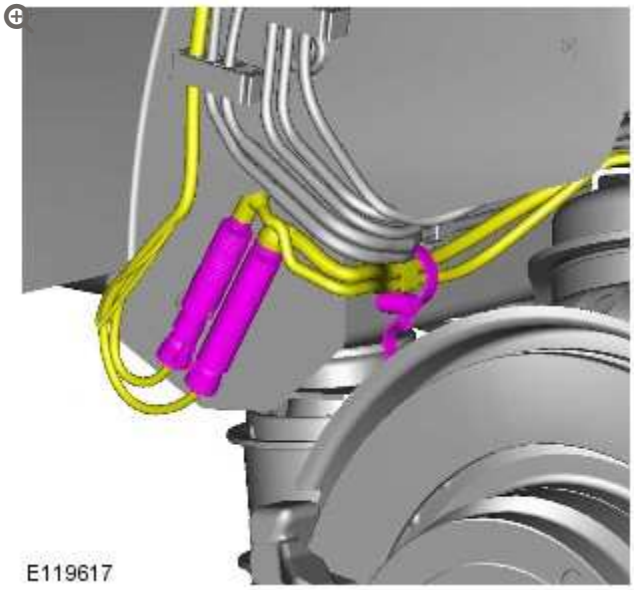

6.

NOTE:

Left hand shown, right hand similar.

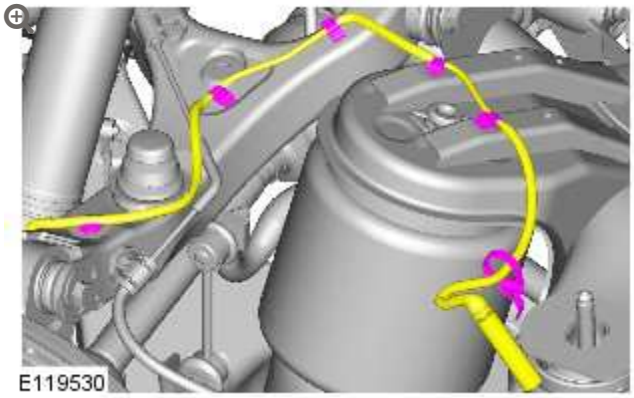

7.

CAUTIONS:

- Make sure that the component is clean, free of foreign material and lubricant.
- Make sure that the mating faces are clean and free of foreign material.
- Make sure that the sensor tip is clean and free of foreign material.

NOTE:

Left hand shown, right hand similar.

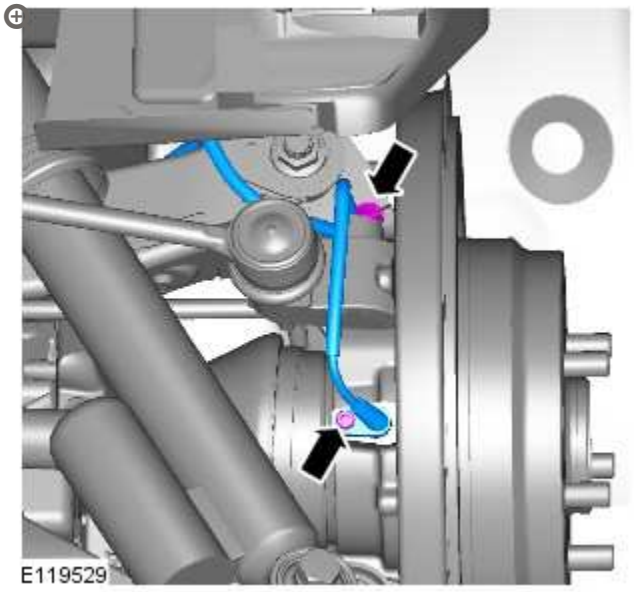

- TORQUE: 8 Nm

INSTALLATION

1. To install, reverse the removal procedure.

2. Configure the anti-lock brake system (ABS) module using the diagnostic tool.

ANTI-LOCK CONTROL - STABILITY ASSIST

SPECIFICATIONS

General Specification

ITEM	SPECIFICATION
Yaw rate sensor	Bosch DRS MM3.10

Torque Specifications

DESCRIPTION	NM	LB-FT
Yaw rate sensor retaining bolts	6	4

ANTI-LOCK CONTROL - STABILITY ASSIST

YAW RATE SENSOR (G1341819)

REMOVAL AND INSTALLATION

70.70.35	SENSOR - DYNAMIC STABILITY CONTROL (DSC) - RENEW	ALL DERIVATIVES	1.1	USED WITHINS	+

REMOVAL

NOTE:

Removal steps in this procedure may contain installation details.

1. Disconnect the battery ground cable.
   For additional information, refer to: Specifications (414-00, Specifications).

2. For additional information, refer to: Floor Console (501-12, Removal and Installation).

3.

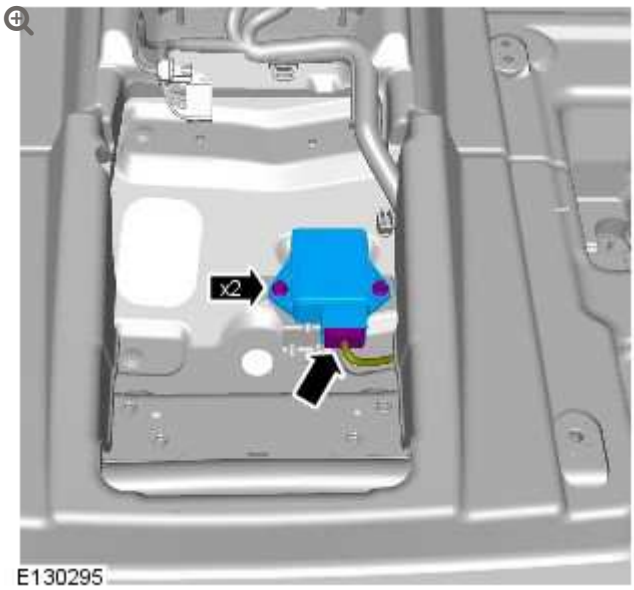

TORQUE: 6 Nm

INSTALLATION

1. To install, reverse the removal procedure.

2. Using the Land Rover approved diagnostic system, calibrate a new yaw rate sensor.

POWER STEERING SYSTEM FILLING AND BLEEDING (G458830)

GENERAL PROCEDURES

1. Check the power steering fluid level.

2. **CAUTION:**

   Fluid must always be present in the reservoir during bleeding.

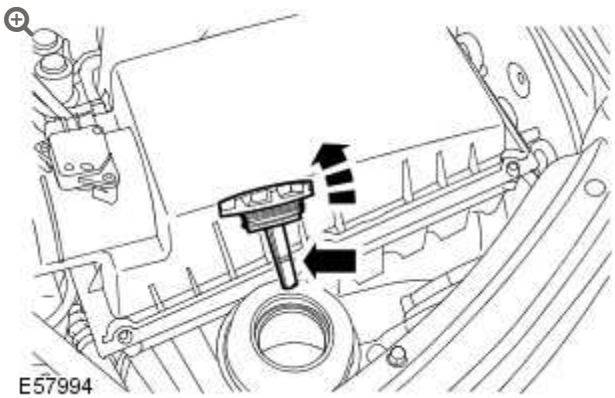

Remove the filler cap and fill to the UPPER level mark.

- Install the reservoir filler cap.

3. Start the engine and allow to run for 10 seconds, stop the engine.
   - Check the power steering fluid, if aerated, wait until fluid is free from bubbles then top-up reservoir to UPPER level mark with recommended fluid.

4. **CAUTION:**

   Do not hold steering on full lock for longer than 10 seconds.

   Start the engine and turn steering fully lock to lock, stop the engine.
   - Check and top-up power steering fluid level.

5. Start and run the engine for 2 minutes, turn the steering fully lock to lock.
   - Check and top-up power steering fluid level.

STEERING SYSTEM - GENERAL INFORMATION

POWER STEERING SYSTEM FLUSHING (G1075788)

GENERAL PROCEDURES

NOTES:

- If heavy steering or contamination within the power steering system is found, it is necessary to carry out the system flush procedure as detailed below. If any components have been replaced in the power steering system the procedure below must be carried out in full.
- Some variation in the illustrations may occur, but the essential information is always correct.

1. Remove the power steering fluid reservoir cap.

2. Using a suitable syringe, remove the power steering fluid from the power steering fluid reservoir.

3. **CAUTION:**

   Be prepared to collect escaping fluids.

NOTE:

Note the orientation of the clip.

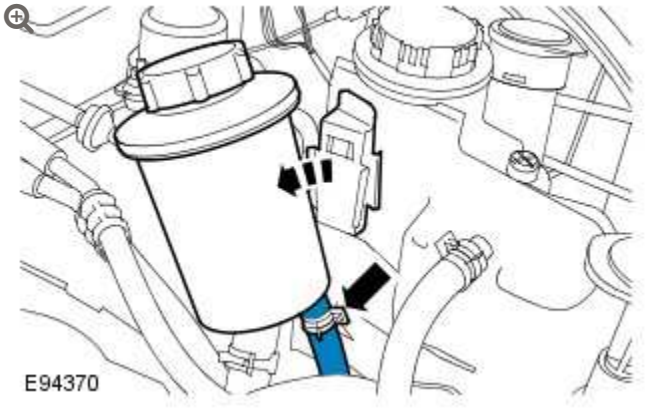

Detach the power steering fluid reservoir.

- Detach but do not remove the power steering fluid reservoir.
- Release the power steering fluid return hose from the power steering fluid reservoir.
- If a quick release coupling is fitted to the power steering return hose, release the power steering fluid return hose from the coupling by removing the clip.

4.

CAUTION:

Be prepared to collect escaping fluids.

NOTE:

Make sure that all openings are sealed. Use new blanking caps.

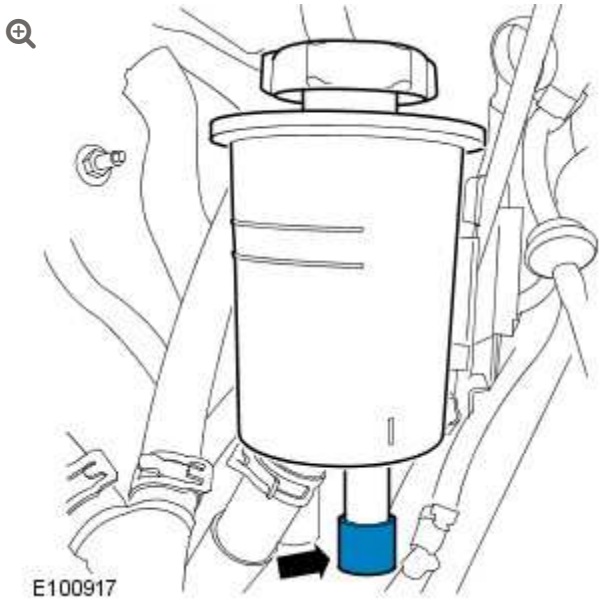

Using a suitable blanking cap, cap the power steering reservoir return pipe.

5.

CAUTION:

Be prepared to collect escaping fluids.

NOTE:

Make sure the extended pipe is not kinked or twisted and is correctly secured with hose clips.

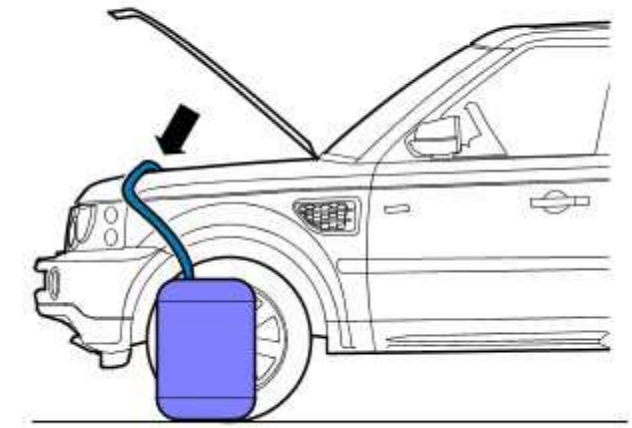

E100918

Attach a suitable pipe to the power steering return hose to allow the fluid to drain.

6.

NOTES:

- The suitable funnel should have the a capacity of 4 litres and O-ring seal
- The suitable funnel must be tightly sealed to the power steering fluid reservoir to avoid fluid leakage.

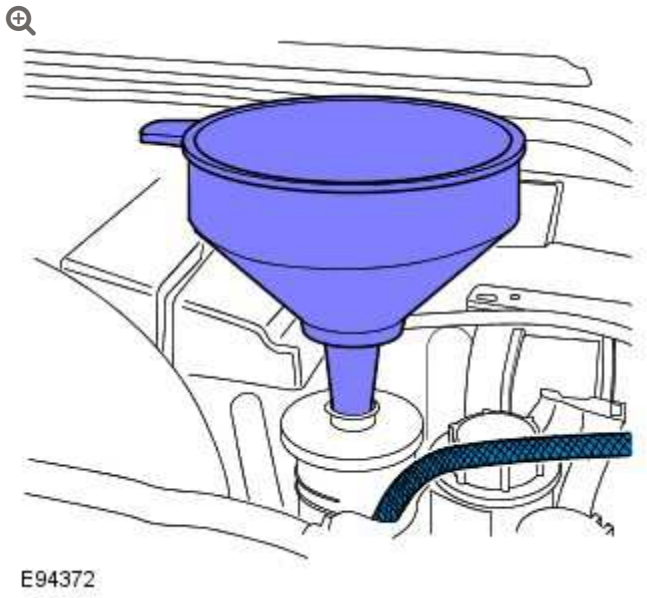

Install a suitable funnel onto the power steering fluid reservoir.

7.

WARNING:

Do not work on or under a vehicle supported only by a jack. Always support the vehicle on safety stands.

Raise and support the vehicle with the wheels just clear of the ground.

8.

CAUTIONS:

- Steps 8 and 9 must be carried out within 2 - 3 seconds of each other. Failure to follow this instruction may result in damage to the power steering system.
- Be prepared to collect escaping fluids.

Using the suitable funnel, top up the power steering system with the specified fluid. Make sure the fluid level is maintained at two thirds full in the funnel.

9.

CAUTIONS:

- Be prepared to collect escaping fluids.
- Do not allow the power steering fluid level in the power steering fluid reservoir to fall below the minimum power steering fluid level. Failure to follow this instruction may result in damage to the power steering system.
- Make sure the engine is switched off as soon as the full 4 litres of power steering fluid has entered the power steering fluid reservoir.

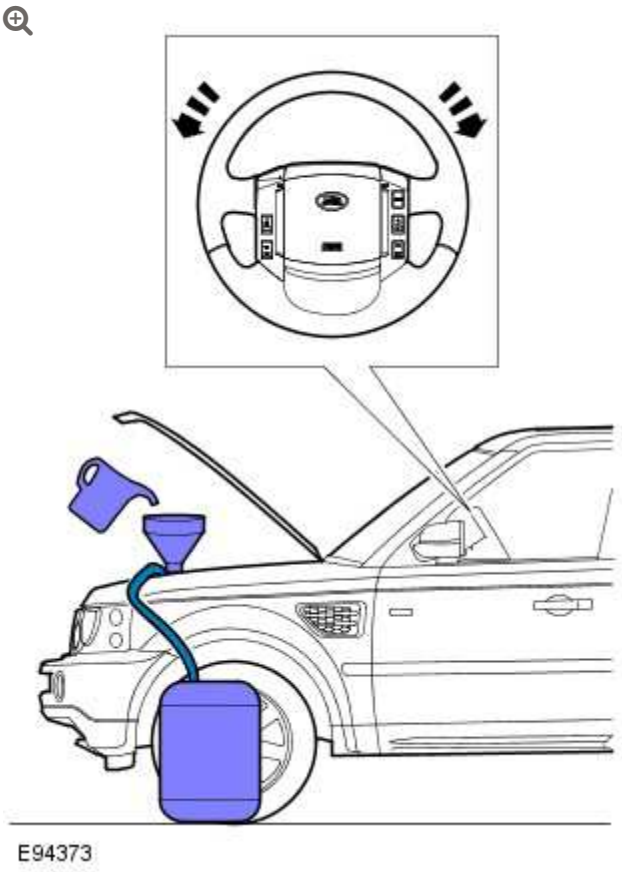

Flush the power steering system.

- Start the engine
- With assistance turn the steering slowly lock to lock 3 times at approximately 1 revolution every 5 seconds.
- Continue to flush the power steering system until 4 litres of power steering fluid has been added to the power steering reservoir. This should take approximately 30 seconds.

10.

CAUTION:

Be prepared to collect escaping fluids.

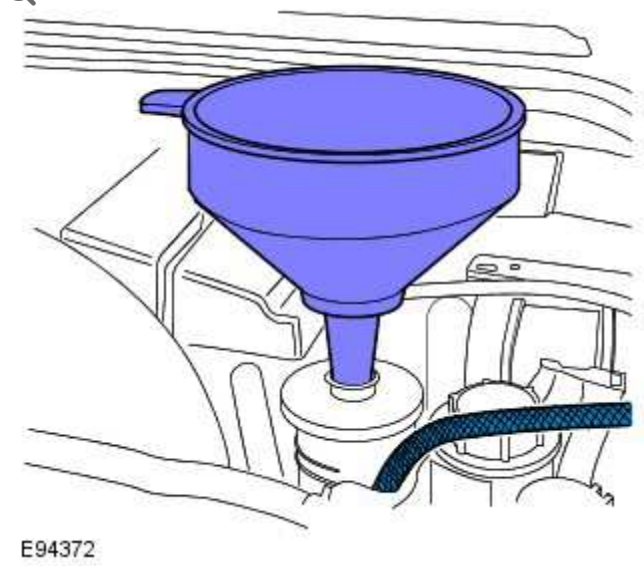

Remove the suitable funnel.

11.

CAUTION:

Be prepared to collect escaping fluids.

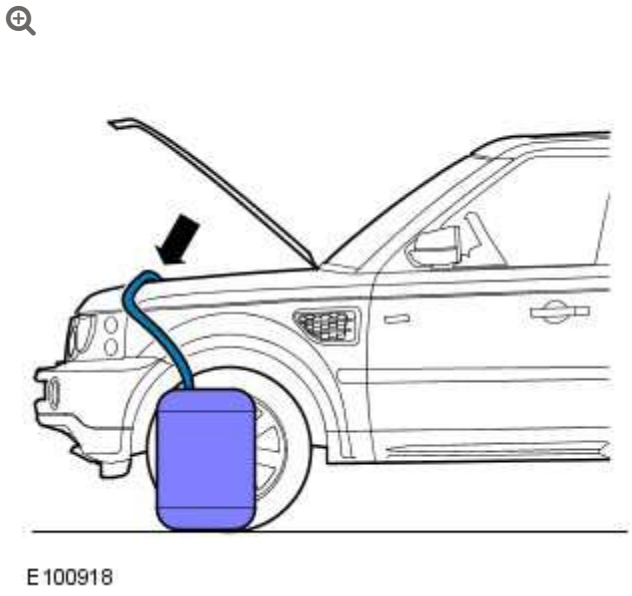

Remove the suitable pipe to the power steering return hose.

12.

CAUTION:

Be prepared to collect escaping fluids.

NOTE:

Note the orientation of the clip.

If a quick release coupling is fitted to the power steering return hose, connect the power steering fluid return hose to the coupling by installing the clip.

13. Install a new power steering fluid reservoir.
    For additional information, refer to: Power Steering Fluid Reservoir (211-02, Removal and Installation).

STEERING SYSTEM – GENERAL INFORMATION

DIAGNOSIS AND TESTING

PRINCIPLE OF OPERATION

For a detailed description of the steering system operation, refer to the relevant description and operation sections of the workshop manual.

INSPECTION AND VERIFICATION

CAUTIONS:

- Diagnosis by substitution from a donor vehicle is **NOT** acceptable. Substitution of control modules does not guarantee confirmation of a fault, and may also cause additional faults in the vehicle being tested and/or the donor vehicle
- If a steering gear assembly is returned under warranty with leaking rack bar seals or high friction, but there is also damage to the steering gear boot/boots, tie-rods or rack bar teeth, then the steering gear warranty will be invalid. This is due to the steering gear rack bar seals being damaged due to foreign materials entering the steering gear boot and damaging the steering gear rack bar seals thereafter or because of bending from abusive/accident events

1. Verify the customer concern

2. Visually inspect for obvious signs of damage and system integrity

Visual Inspection

Mechanical	Electrical
▪ Tire condition/pressure ▪ Fluid level	▪ Fuses

3. Check for any steering related DTCs and refer to the relevant DTC index

4. Refer to the relevant symptom chart for further guidance

DTC INDEX

For a list of Diagnostic Trouble Codes (DTCs) that could be logged on this vehicle, please refer to Section 100-00.

For Column Lock DTCs on L319, L320, L322, L359 -

REFER to: Diagnostic Trouble Code (DTC) Index - DTC: Electric Steering Column Lock Control Module (ESCL) (100-00 General Information, Description and Operation

For Additional Column Lock DTCs on L319, L320, L322, L359;

For Column Adjustment Motors or Solenoid DTCs on L319, L320, L322;

For Power Steering Solenoid (Actuator) DTCs on L320, L322;

For Power Steering Calibration DTCs on L319, L320, L322 -

REFER to: Diagnostic Trouble Code (DTC) Index - DTC: Central Junction Box (CJB) (100-00 General Information, Description and Operation).

For Additional Column Lock DTCs on L319, L320, L322, L359;

For Power Steering Calibration DTCs on L320, L322 -

REFER to: Diagnostic Trouble Code (DTC) Index - DTC: Instrument Cluster (IC) (100-00 General Information, Description and Operation)

SYMPTOM CHARTS

WARNING:

It is not possible to CHECK the torque of a patch lock bolt, if the torque is suspected to be low, the bolt must be REMOVED/DISCARDED and a new bolt MUST be INSTALLED and torque to the correct value.

NOTE:

If the module or a component is suspect and the vehicle remains under manufacturer warranty, refer to the Warranty Policy and Procedures manual, or determine if any prior approval programme is in operation, prior to the installation of a new module/component.

Given the wide and varied nature of potential issues with the vehicle steering system, a series of symptom charts, pinpoint tests and additional diagnostic/remedial procedures are included throughout Section 211 (Steering System). For help in diagnosis of reported steering issue(s), refer to the following sections of the workshop manual:

NOTE:

It is possible that symptoms of a reported issue may appear in one or more of the diagnosis procedures listed below

For power steering system,
REFER to: Power Steering (211-02 Power Steering, Diagnosis and Testing).

For steering linkage,
REFER to: Steering Linkage (211-03 Steering Linkage, Diagnosis and Testing).

For steering column,
REFER to: Steering Column (211-04 Steering Column, Diagnosis and Testing).

For all other steering issues, see below:

GENERAL STEERING ISSUES

SYMPTOM	POSSIBLE CAUSES	ACTION
▪ Veer under braking	▪ Excess play in steering system	▪ REFER to: Pinpoint Tests within Section 211-03 Steering Linkage/Diagnosis and Testing/Steering Linkage
	▪ Contamination of brake pads and discs	▪ Check and rectify the source of the contamination and install new brake pads and discs as required, refer to the new module/component installation note at the top of the symptom charts
	▪ Seized front brake caliper slide pins or piston ▪ Damaged brake discs	▪ Check and rectify sticking slide pins and install new calipers as required, refer to the new module/component installation note at the top of the symptom charts ▪ Check and install new brake discs as required, refer to the new module/component installation note at the top of the symptom charts

SYMPTOM	POSSIBLE CAUSES	ACTION
	▪ Incorrect geometry settings	**NOTE:** Dealerships must keep a copy of the BEFORE and AFTER geometry figures with job card for future reference ▪ Check and adjust geometry as required (REFER to: Section 204-00 Suspension System - General Information/General Procedures)
▪ Vehicle pulls to one side when driving on a level surface	▪ Uneven tire wear ▪ Incorrect tire pressure	▪ For information on diagnosis of uneven tire wear (REFER to: Section 204-00 Suspension System - General Information/Diagnosis and Testing/Suspension System) ▪ Check and adjust tire pressures as required (REFER to: Section 204-04 Wheels and Tires/Specification)
	▪ Incorrect geometry settings	**NOTE:** Dealerships must keep a copy of the BEFORE and AFTER geometry figures with job card for future reference ▪ Check and adjust geometry as required (REFER to: Section 204-00 Suspension System - General Information/General Procedures)

SYMPTOM	POSSIBLE CAUSES	ACTION
	▪ Vehicle is unevenly loaded or overloaded	▪ Notify the customer of incorrect vehicle loading
	▪ Excess play in steering system	▪ REFER to: Pinpoint Tests within Section 211-03 Steering Linkage/Diagnosis and Testing/Steering Linkage
	▪ Loose, damaged or worn front suspension components	▪ Check/tighten and install new front suspension components as required (REFER to: Section 204-00 Suspension System - General Information/Specification)
	▪ Loose, damaged or worn rear suspension components	▪ Check/tighten and install new rear suspension components as required (REFER to: Section 204-00 Suspension System - General Information/Specification)
	▪ Incorrect brake operation	▪ For information on diagnosis of the brake system (REFER to: Section 206-00 Brake System - General Information/Diagnosis and Testing/Brake System)
	▪ Incorrect underbody alignment	▪ Set underbody alignment (REFER to: Section 502-00 Uni-Body, Subframe and Mounting System/Removal & Installation)
▪ Wheel fight (kick back) - condition where	▪ Loose or worn steering components/bushings	

SYMPTOM	POSSIBLE CAUSES	ACTION
roughness is felt in the steering wheel by the driver when the vehicle is driven over rough surfaces		**CAUTION:** DO NOT attempt to adjust the steering gear yoke. Failure to follow this instruction will invalidate the steering gear warranty. ▪ REFER to: Pinpoint Tests within Section 211-03 Steering Linkage/Diagnosis and Testing/Steering Linkage
	▪ Loose or worn suspension components/bushings	▪ Tighten and install new suspension components/bushings as required
▪ Nibble (shimmy) - condition where oscillation of the steering wheel occurs (not vertical which is shake). This is driven by road wheel imbalance ▪ Shake - condition where vertical vibration of the steering wheel/column occurs (not oscillation which is nibble)	▪ Road wheel incorrect balance/radial force variation/forcing	▪ REFER to: Section 204-04 Wheels and Tires/Diagnosis and Testing/Wheels and Tires/Symptom - Vehicle Vibration

DESCRIPTION OF TERMS

GENERAL STEERING SYSTEM NOISES

BOOM

Rhythmic sound like a drum roll or distant thunder. May cause pressure on the ear drum

BUZZ

Low-pitched sound, like a bee. Usually associated with vibrations

CHATTER

Rapidly repeating metallic sound

CHUCKLE

Rapid noise that sounds like a stick against the spokes of a spinning bicycle wheel

CHIRP

High pitched rapidly repeating sound, like chirping birds

CLICK

Light sound, like a ball point pen being clicked

CLICK/THUMP

Heavy metal-to-metal sound, like a hammer striking steel

GRIND

Abrasive sound, like a grinding wheel or sandpaper rubbing against wood

GROAN/MOAN

Continuous, low-pitched humming sound

GROAN/HOWL

Low, guttural sound, like an angry dog

HISS

Continuous sound like air escaping from a tire valve

HUM

Continuous sound of varying frequencies, like a wire humming in the wind

KNOCK

Heavy, loud repeating sound like a knock on a door

PING

Similar to knock, except at higher frequency

RATTLE

A sound suggesting looseness, such as marbles rolling around in a can

ROAR

Deep, long, prolonged sound like an animal, or winds and ocean waves

RUMBLE

Low, heavy continuous sound like that made by wagons or thunder

SCRAPE

Grating noise like one hard plastic part rubbing against another

SQUEAK

High-pitched sound like rubbing a clean window

SQUEAL

Continuous, high-pitched sound like running finger nails across a chalkboard

TAP

Light, hammering sound like tapping pencil on edge of table. May be rhythmic or intermittent

WHIRR/WHINE

High-pitched buzzing sound, like an electric motor or drill

WHISTLE

Sharp, shrill sound, like wind passing a small opening

POWER STEERING

SPECIFICATIONS

Power Steering Fluid

ITEM	SPECIFICATION
Recommended power steering fluid	Texaco Cold Climate Fluid 33270

General Specification

ITEM	SPECIFICATION
Type	Power assisted rack and pinion, speed proportional with belt driven pump and remote hydraulic fluid reservoir
Steering wheel diameter	400 mm (15.7 in)
Number of turns - lock to lock	3.44
Turning circle	11.6 m (38 ft)
System ratio	20:1
Pump relief valve operating pressure - Vehicles with diesel engines	122 ± 4 bar (12200 ± 400 kPa) (1769.5 ± 58 lbf/in²)
Pump relief valve operating pressure - All except vehicles with diesel engines	127 ± 5 bar (12700 ± 500 kPa) (1842 ± 72 lbf/in²)
Maximum fluid flow rate - constant	10 ± 0.6 litre/min (17.6 ± 1.06 pints/min) (10.57 ± 0.63 US quarts/min)
Steering rack travel	170 mm (6.69 in)

ITEM	SPECIFICATION
Rack bar diameter	32 mm (1.26 in)
Steering angle sensor make/part number	Panasonic SRO 500110

Torque Specifications

DESCRIPTION	NM	LB-FT
Power steering pump front bolts	48	35
Power steering pump rear bolt	25	18
High pressure line to power steering pump	24	18
++ Low pressure line to steering gear	28	21
++ High pressure line to steering gear	28	21
+ Steering gear to front subframe nuts/bolts	100	74
Steering gear tie rod end ball joint nuts	80	59
** Universal joint to steering gear bolt	24	18
* Steering gear tie rod end locknut	70	52
Stabilizer bar link nut	100	74
Suspension height sensor link arm nut	8	6
Front lower arm nut/bolt:		
Stage 1	165	121
Stage 2	Further 90°	Further 90°
Rear lower arm nut/bolt:		
Stage 1	165	121
Stage 2	Further 90°	Further 90°
Air suspension spring top mount nuts	56	41
Suspension height sensor	3.5	2.5
Engine mount to engine block bolts:		
Stage 1	45	33

DESCRIPTION	NM	LB-FT
Stage 2	Further 60°	Further 60°
Engine mount to front subframe bolts	56	41
Engine mount bracket to engine mount nut/bolt	115	85
Halfshaft support bearing housing bolts	25	18

*** New nut(s) must be installed**

+ New cage nuts must be installed

**** New 'Patchlok' bolt must be installed**

++ New sealing washers must be installed

POWER STEERING CONTROL VALVE ACTUATOR (G834201)

REMOVAL AND INSTALLATION

57.10.05	SERVOTRONIC - VALVE - RENEW	ALL DERIVATIVES	0.6	USED WITHINS	+

REMOVAL

1. Disconnect the battery ground cable.
   For additional information, refer to: Specifications (414-00, Specifications).

2. **WARNING:**

   Make sure to support the vehicle with axle stands.

   Raise the vehicle on the lift.

3. Remove the front wheel and tire.

4.

CAUTION:

Before disconnecting or removing the components, make sure the area around the joint faces and connections are clean. Plug open connections to prevent contamination.

NOTES:

- Note the fitted position.
- Some variation in the illustrations may occur, but the essential information is always correct.

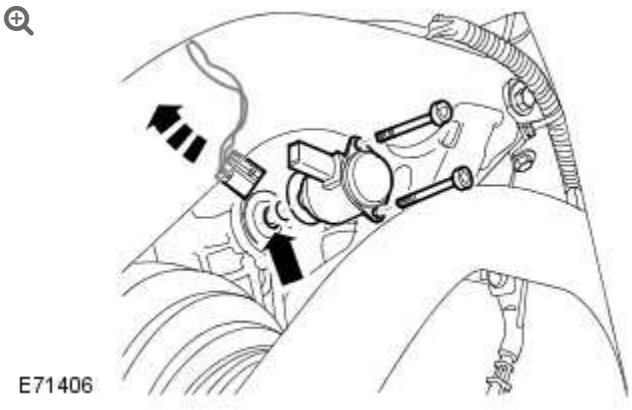

Remove the power steering control valve actuator.

- Disconnect the electrical connector.
- Position a container to collect the fluid spillage.
- Remove and discard the 2 Torx screws.
- Remove and discard the 2 O-ring seals.
- Remove and discard the filter.

INSTALLATION

1. **CAUTION:**

   Make sure the working surfaces are thoroughly clean to avoid contamination of the sensitive hydraulic components.

   Clean the component mating faces.

2. Install a new filter to the steering gear.

3. Install new seals to the actuator.

4. **NOTE:**

   Align to the position noted on removal.

   Install the actuator.

   - Tighten the new Torx screws, evenly and progressively, to 3 Nm (2.2 lb.ft).
   - Connect the electrical connector.

5. Install the wheel and tire.

   - Tighten the wheel nuts to 140 Nm (103 lb.ft).

6. Connect the battery ground cable.
   For additional information, refer to: Specifications (414-00, Specifications).

7. Refill and bleed the power steering.
   For additional information, refer to: Power Steering System Filling and Bleeding (211-00 Steering System - General Information, General Procedures).

POWER STEERING

POWER STEERING FLUID COOLER – V8 5.0L PETROL/V8 S/C 5.0L PETROL (G1235831)

REMOVAL AND INSTALLATION

57.15.11	FLUID COOLER – POWER STEERING – RENEW	5000 CC, AJ V8	1.7	USED WITHINS	+

REMOVAL

1. Disconnect the battery ground cable.
   Refer to: Specifications (414-00, Specifications).

2. Refer to: Power Steering Fluid Reservoir - 5.0L (211-02, Removal and Installation).

3. **WARNING:**

   Do not work on or under a vehicle supported only by a jack. Always support the vehicle on safety stands.

Raise and support the vehicle.

4. Refer to: Front Bumper Cover (501-19, Removal and Installation).

5.

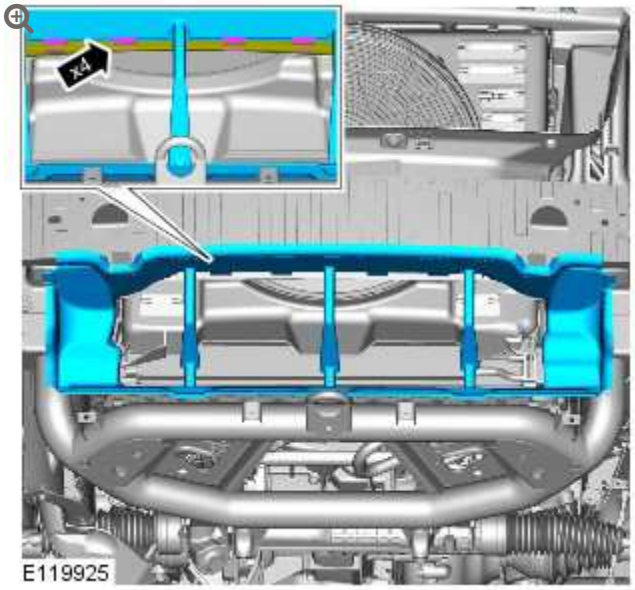

6.

CAUTIONS:

- Be prepared to collect escaping fluids.
- Make sure that all openings are sealed. Use new blanking caps.

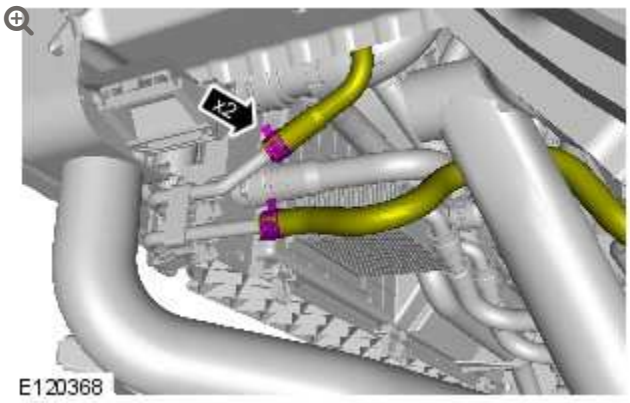

7.

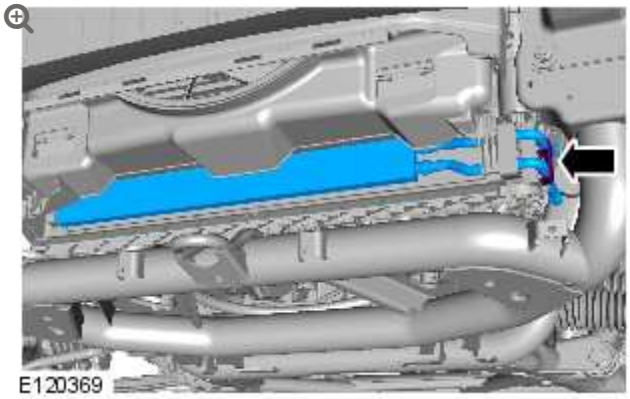

INSTALLATION

1. To install, reverse the removal procedure.

POWER STEERING

POWER STEERING FLUID RESERVOIR – V8 5.0L PETROL/V8 S/C 5.0L PETROL (G1226680)

REMOVAL AND INSTALLATION

57.15.08	RESERVOIR – POWER STEERING FLUID – RENEW	ALL DERIVATIVES	0.6	USED WITHINS	+

REMOVAL

WARNING:

If the fluid is spilled on the paintwork, the affected area must be immediately washed down with cold water.

1. Disconnect the battery ground cable.
   Refer to: Specifications (414-00, Specifications).

2. Refer to: Power Steering System Flushing (211-00, General Procedures).

3.

NOTE:

Some variation in the illustrations may occur, but the essential information is always correct.

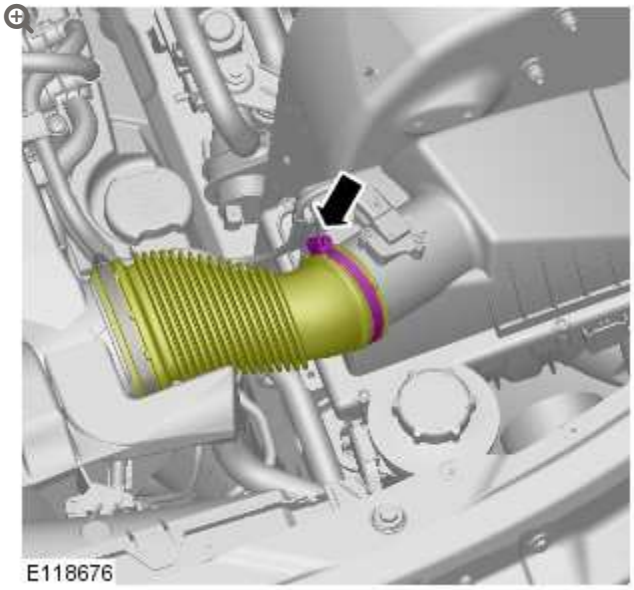

Torque: **3.5 Nm**

4.

NOTE:

Some variation in the illustrations may occur, but the essential information is always correct.

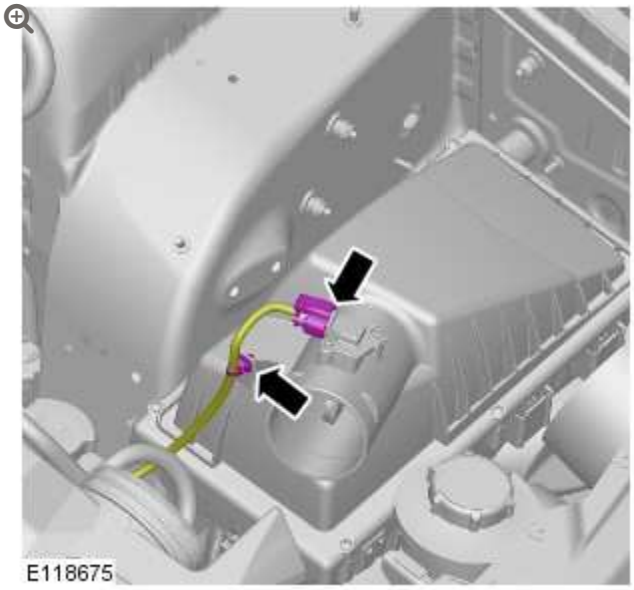

5.

NOTE:

Some variation in the illustrations may occur, but the essential information is always correct.



6.

WARNING:

Be prepared to collect escaping fluid.

CAUTION:

Make sure that all open ports are covered to prevent any foreign material ingress.

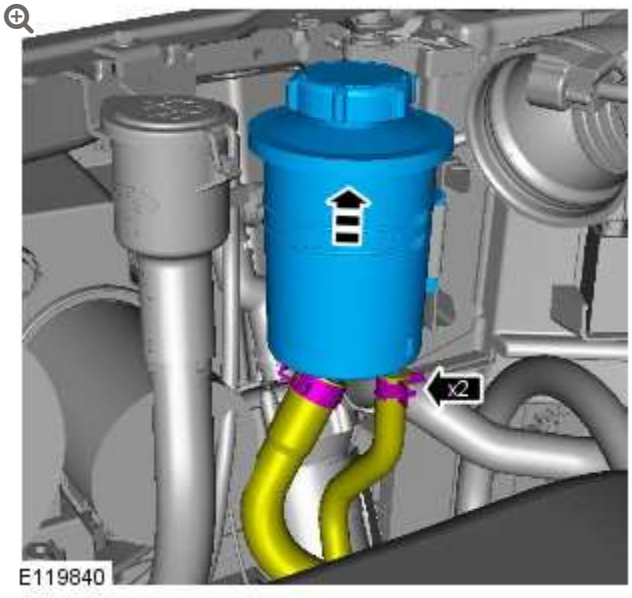

INSTALLATION

1.

NOTE:

Remove and discard the blanking caps.

To install, reverse the removal procedure.

POWER STEERING

POWER STEERING PRESSURE TEST – V8 5.0L PETROL/V8 S/C 5.0L PETROL (G1508897)

GENERAL PROCEDURES

SPECIAL TOOL(S)

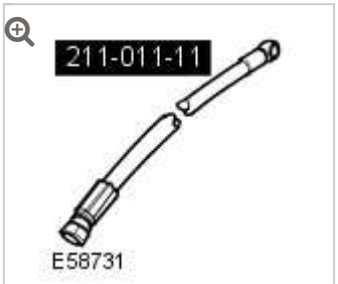

211–011–11

Hose - power steering pressure test

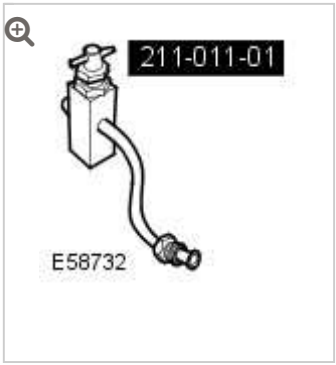

211-011-01(LRT-57-001)

Valve block power steering test



211-287 (LRT-57-005)

Hose and gauge - power steering pressure test



211-011-13

Adaptor, Power steering pressure test

NOTE:

Some variation in the illustrations may occur, but the essential information is always correct.

1. Disconnect the battery ground cable.
   For additional information, refer to: Specifications (414-00 Battery and Charging System - General Information, Specifications).

2. Remove the air cleaner assembly.
   For additional information, refer to: Air Cleaner RH (303-12A Intake Air Distribution and Filtering - V8 5.0L Petrol, Removal and Installation).

3. Remove the fluid from the power steering reservoir.
   - Remove the power steering fluid reservoir cap.

4. **CAUTION:**

   Before disconnecting or removing the components, make sure the area around the joint faces and connections are clean. Plug open connections to prevent contamination.

   NOTES:

   - Some fluid spillage is inevitable during this operation.
   - Care must be taken to avoid contamination of the accessory drive belt.

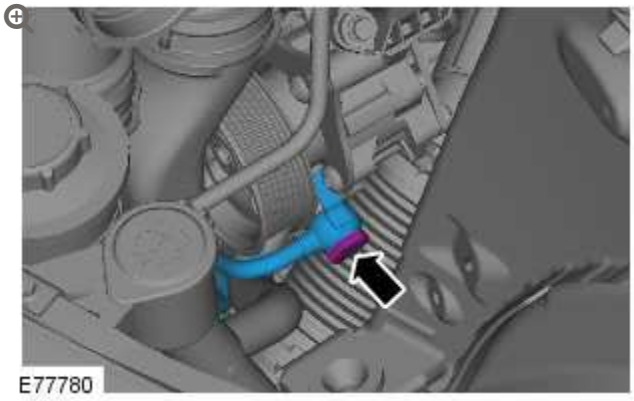

Disconnect the power steering high-pressure pipe union.

- Remove the bolt.
- Remove and discard the 2 sealing washers.
- Position a container to collect the fluid.

5.

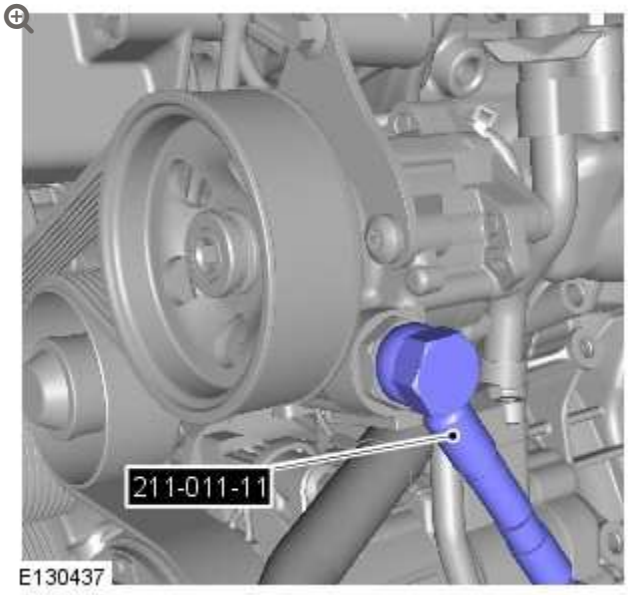

Install the special tools to the power steering high-pressure port.

- Install the sealing washers.
- Tighten the bolt to 28 Nm (18 lb.ft).

6.

WARNING:

Make sure to support the vehicle with axle stands.

Raise and support the vehicle.

7. Remove the engine undershield.
   For additional information, refer to: Engine Undershield (501-02 Front End Body Panels, Removal and Installation).

8. Remove the front undershield.
   For additional information, refer to: Radiator Splash Shield (501-02 Front End Body Panels, Removal and Installation).

9. 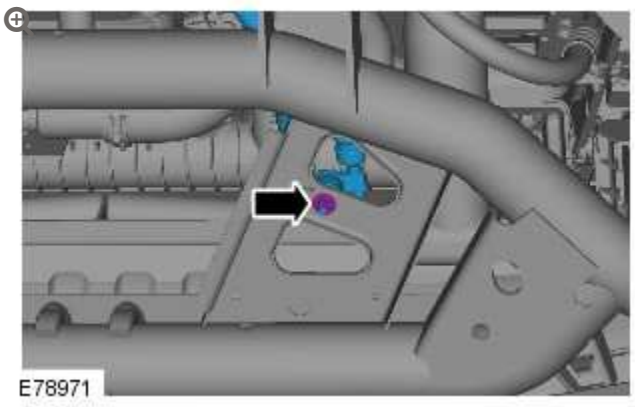

   Release and reposition the power steering high-pressure pipe.

   - Remove the nut.

10.

CAUTION:

Before disconnecting or removing the components, make sure the area around the joint faces and connections are clean. Plug open connections to prevent contamination.

NOTES:

- Some fluid spillage is inevitable during this operation.
- RHD shown, LHD is similar.

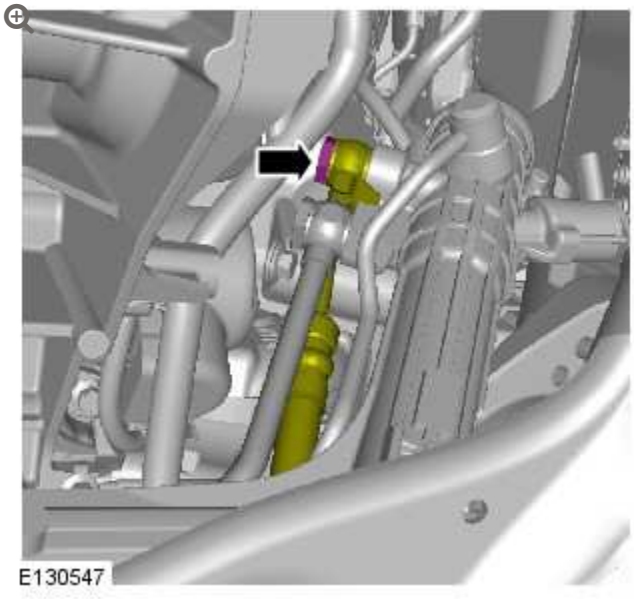

Disconnect the power steering fluid line from the steering gear.

- Remove the bolt.
- Remove and discard the 2 sealing washers.
- Position a container to collect the fluid.

11.

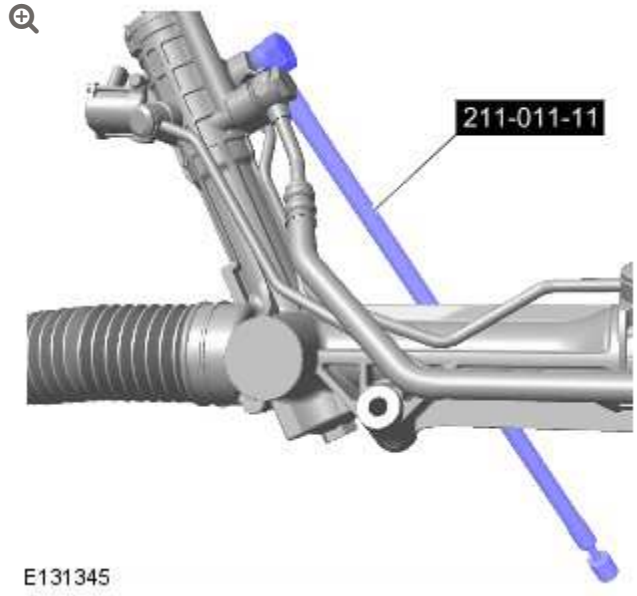

Install the special tool to the steering gear.

- Install the sealing washers.
- Tighten the bolt to 28 Nm (18 lb.ft).

12.

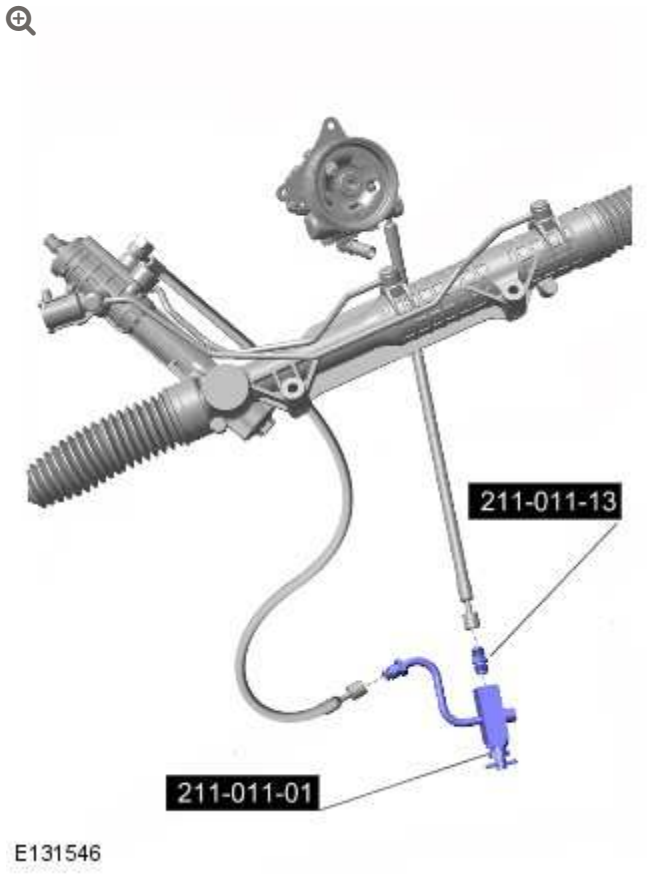

Install the special tool valve block assembly, to the steering gear and pump special tools.

- Connect the special tool lines, to the special tool valve block assembly.
- Tighten the union nuts to 25 Nm (18 lb.ft).

13. **NOTE:**

Some variation in the illustrations may occur, but the essential information is always correct.

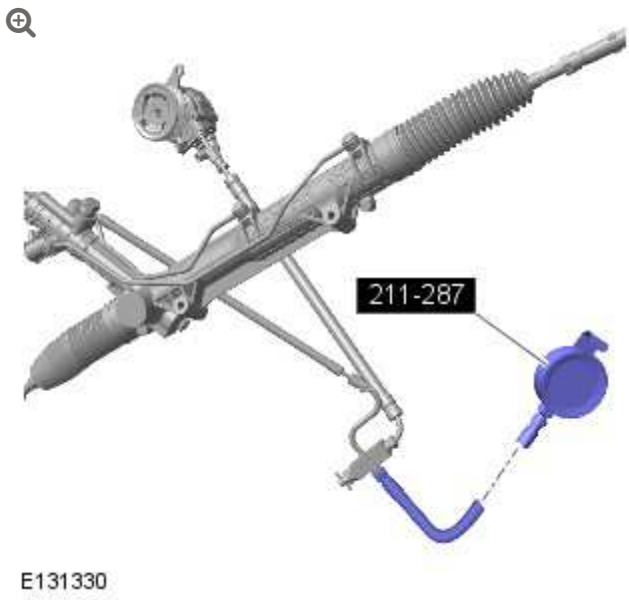

Connect the pressure gauge to the special tool valve block.

- Tighten the union to 25 Nm (18 lb.ft).
- Tie aside under the vehicle.

14. Lower the vehicle on the lift.

15. Fill the power steering reservoir.

16. Install the air cleaner assembly.
For additional information, refer to: Air Cleaner RH (303-12A Intake Air Distribution and Filtering - V8 5.0L Petrol, Removal and Installation).

17. Connect the battery ground cable.
For additional information, refer to: Specifications (414-00 Battery and Charging System - General Information, Specifications).

18.

NOTES:

- Maintain the maximum fluid level during the test.
- Make sure the steering is in the straight ahead position.
- Make sure the steering components and test equipment are free from leaks.

With the test valve open start the engine.

- Start the engine and turn steering fully lock to lock, stop the engine.
- Top-up the power steering fluid reservoir.
- Install the reservoir filler cap.

19. For correct power steering pressures, refer to the steering specification section.
For additional information, refer to: Specifications (211-02 Power Steering, Specifications).

20. **CAUTION:**

Do not hold steering at full lock for longer than 10 seconds.

With the engine at idle, slowly turn the steering wheel and hold on full lock.

- With assistance record the pressure reading.

21. Repeat the above procedure for the other side.

- Record the pressure reading.

22. **NOTE:**

> Make sure the steering is in the straight ahead position.

With the engine at idle, release the steering wheel. The pressure should be, at or below, the pressure specified.

23. Pressure outside this tolerance, indicates a fault.

24. **CAUTION:**

> Pump damage will occur if test valve is closed for longer periods.

To determine if the fault is in the steering pump or the steering rack, close the test valve for a maximum of 5 seconds.

25. If the pressures recorded fall outside the given values, replace the power steering pump.

26. If the maximum pump pressure is correct, then replace the power steering gear.

27. On completion of the test stop the engine.

28. Disconnect the battery ground cable.
For additional information, refer to: Specifications (414-00 Battery and Charging System - General Information, Specifications).

29. Remove the air cleaner assembly.
For additional information, refer to: Air Cleaner RH (303-12A Intake Air Distribution and Filtering - V8 5.0L Petrol, Removal and Installation).

30. Remove the fluid from the power steering reservoir.

31. **NOTES:**

- Some fluid spillage is inevitable during this operation.
- Care must be taken to avoid contamination of the accessory drive belt.

Remove the special tools.

32. Connect the high-pressure line to the power steering pump.
- Clean the component mating faces.
- Install 2 new sealing washers.
- Tighten the bolt to 28 Nm (18 lb.ft).

33. Install the air cleaner assembly.
For additional information, refer to: Air Cleaner RH (303-12A Intake Air Distribution and Filtering - V8 5.0L Petrol, Removal and Installation).

34. Connect the battery ground cable.
For additional information, refer to: Specifications (414-00 Battery and Charging System - General Information, Specifications).

35.

WARNING:

Make sure to support the vehicle with axle stands.

Raise and support the vehicle.

36. Connect the high-pressure line to the power steering gear.
    - Clean the component mating faces.
    - Install 2 new sealing washers.
    - Tighten the bolt to 28 Nm (18 lb.ft).

37. Install the front undershield.
    For additional information, refer to: Radiator Splash Shield (501-02 Front End Body Panels, Removal and Installation).

38. Install the engine undershield.
    For additional information, refer to: Engine Undershield (501-02 Front End Body Panels, Removal and Installation).

39. Fill and beed the power steering system.
    For additional information, refer to: Power Steering System Filling and Bleeding (211-00 Steering System - General Information, General Procedures).

POWER STEERING

POWER STEERING PUMP – V8 5.0L PETROL/V8 S/C 5.0L PETROL (G1230280)

REMOVAL AND INSTALLATION

57.20.14	PUMP - STEERING - RENEW	5000 CC, AJ V8	2	USED WITHINS	+

REMOVAL

NOTES:

- Removal steps in this procedure may contain installation details.
- Some variation in the illustrations may occur, but the essential information is always correct.

1. Refer to: Specifications (414-00 Charging System - General Information, Specifications).
2. Refer to: Power Steering Fluid Reservoir - 5.0L NA V8 - AJ133/5.0L SC V8 - AJ133 (211-02 Power Steering, Removal and Installation).

3. Refer to: Air Cleaner Outlet Pipe LH (303-12 Intake Air Distribution and Filtering - 5.0L, Vehicles Without: Supercharger, Removal and Installation).

4. Refer to: Air Cleaner LH (303-12 Intake Air Distribution and Filtering - 5.0L, Vehicles Without: Supercharger, Removal and Installation).

5. Refer to: Air Conditioning (A/C) System Recovery, Evacuation and Charging (412-00 Climate Control System - General Information, General Procedures).

6. **WARNING:**

> Make sure to support the vehicle with axle stands.

Raise and support the vehicle.

7. **CAUTIONS:**

> - Make sure that all openings are sealed. Use new blanking caps.
> - A new O-ring seal is to be installed.

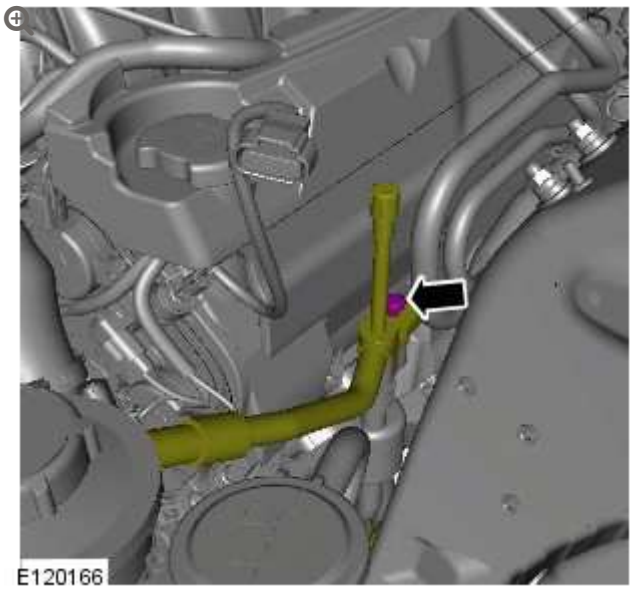

Torque: **18 Nm**

8.

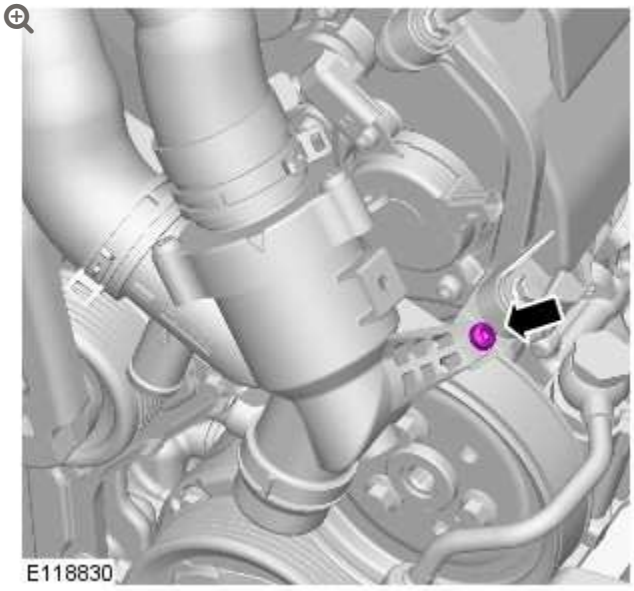

Torque: **10 Nm**

9.

NOTE:

Do not loosen the bolts more than 2 turns.

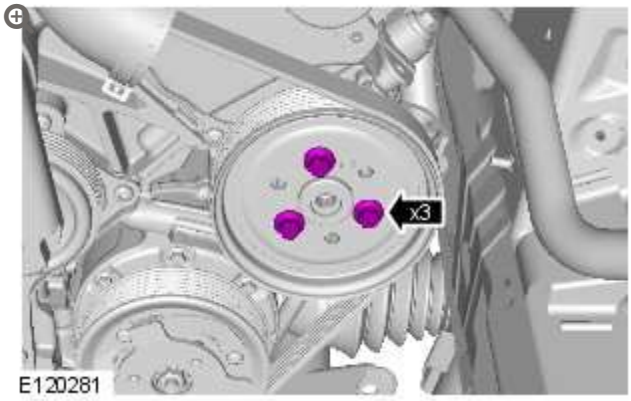

Torque: **25 Nm**

10.

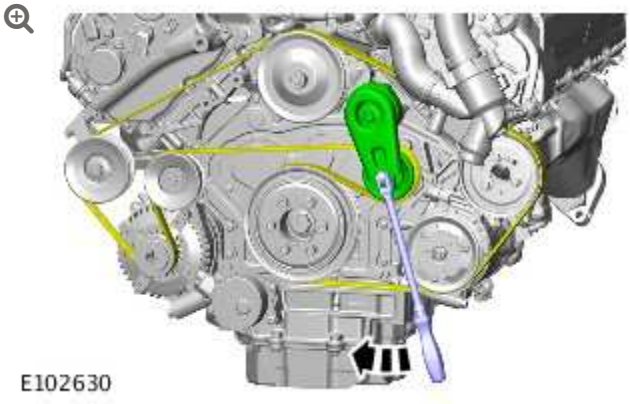

11.

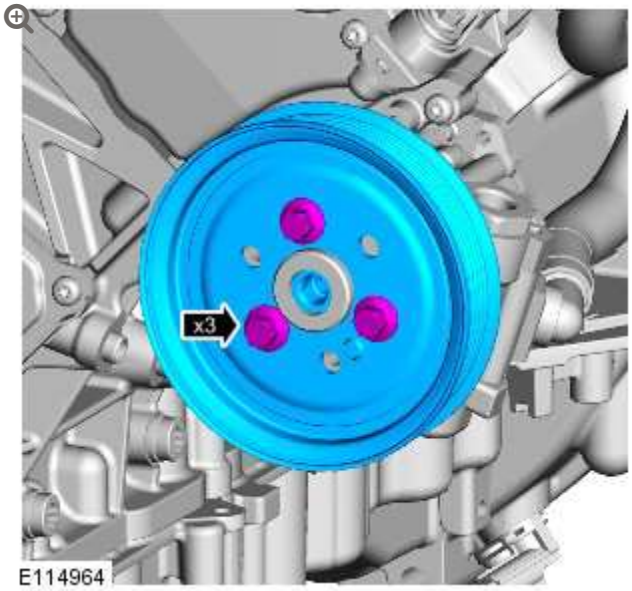

12.

CAUTION:

Make sure that all openings are sealed. Use new blanking caps.

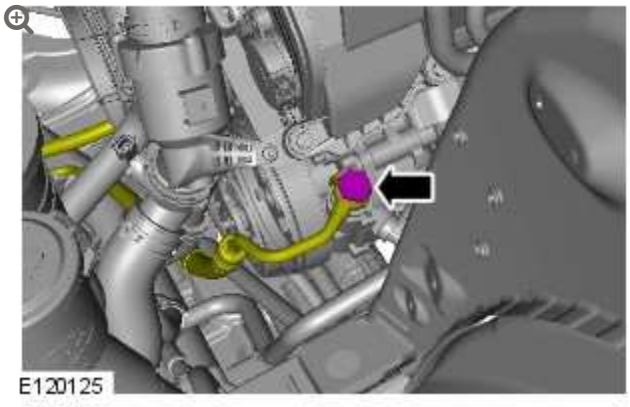

Torque: **25 Nm**

13.

CAUTIONS:

- Make sure that all openings are sealed. Use new blanking caps.
- A new O-ring seal is to be installed.

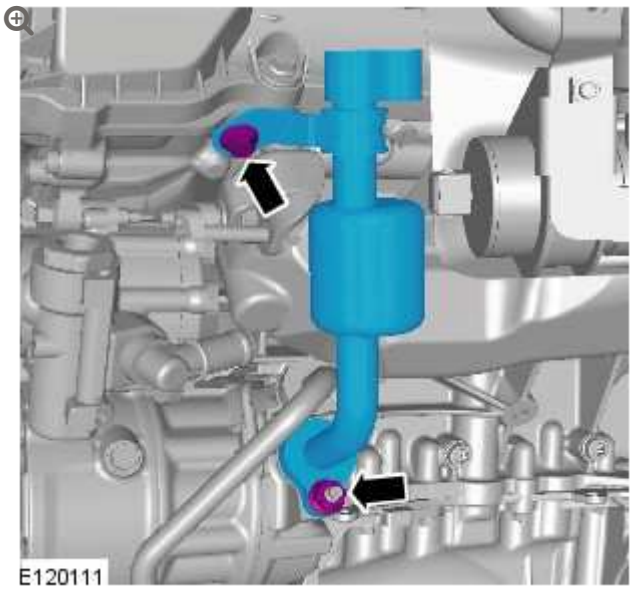

Torque:

M8 nut **9 Nm**

M8 **25 Nm**

14.

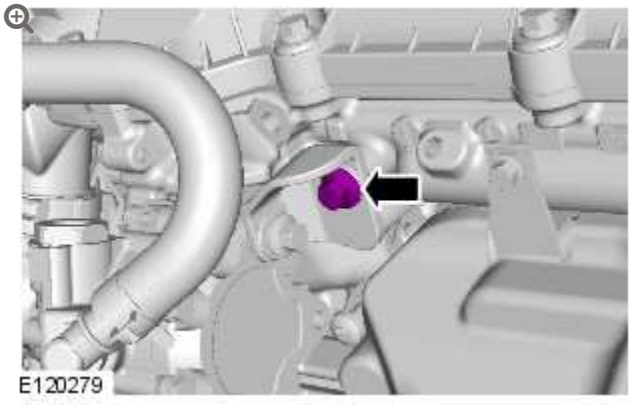

Torque: **25 Nm**

15.

CAUTION:

Note the fitted position of the component prior to removal.

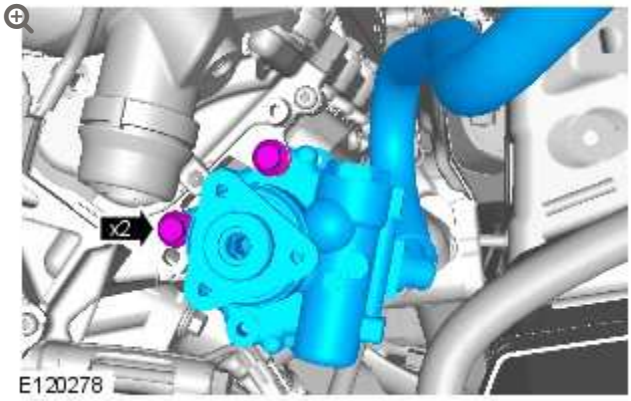

Torque: **25 Nm**

16.

NOTE:

Do not disassemble further if the component is removed for access only.

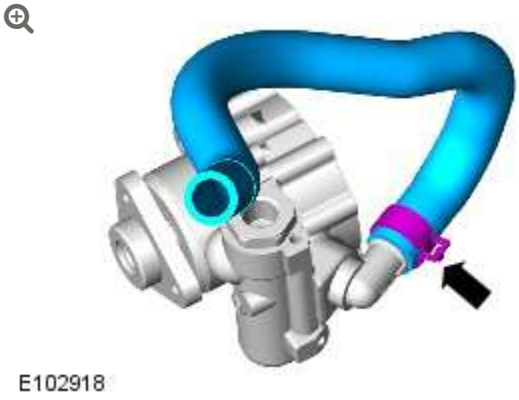

17.

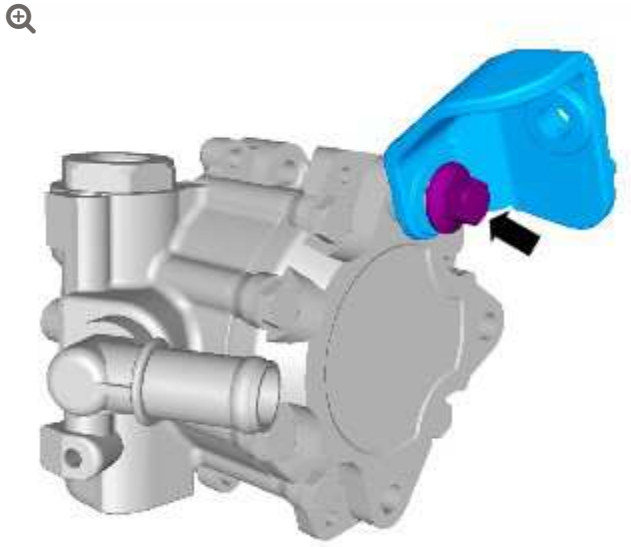

E120280

INSTALLATION

1. To install, reverse the removal procedure.

POWER STEERING

DESCRIPTION AND OPERATION

POWER STEERING COMPONENT LOCATION

NOTE:

Generic overview shown; components may differ on some models.

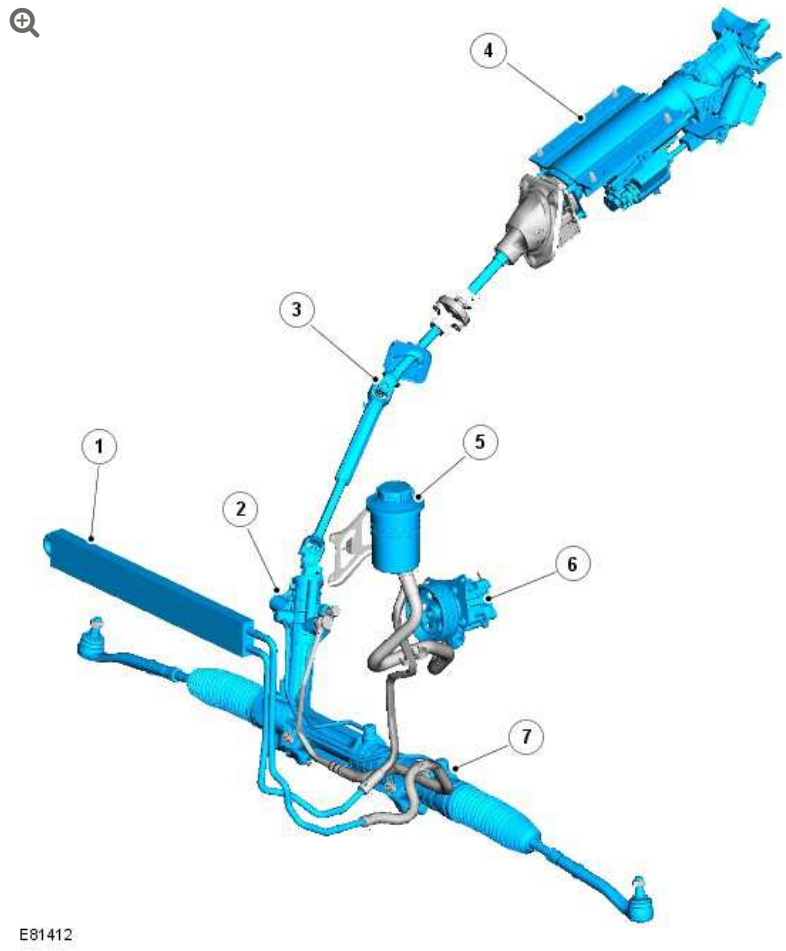

ITEM	DESCRIPTION
1	Fluid cooler (if fitted)
2	Servotronic valve
3	Lower column
4	Upper column
5	Power steering fluid reservoir
6	Power steering pump
7	Steering gear

INTRODUCTION

A ZF power steering gear is fitted on the front subframe. The unit is a conventional-end take-off rack and pinion power assisted unit with the addition of ZF Servotronic assistance.

Servotronic adds electronic control and speed sensitive steering to the steering gear. The Servotronic feature provides easy and comfortable steering operation when parking, improved 'road feel' at increased road speeds and adds an integrated, positive centre feel feature which optimizes steering wheel torque during high speed driving.

The Servotronic system is controlled by software which is incorporated into the CJB (central junction box). The software responds to road speed signals and modifies the assistance via a transducer valve located on the steering gear valve.

STEERING GEAR

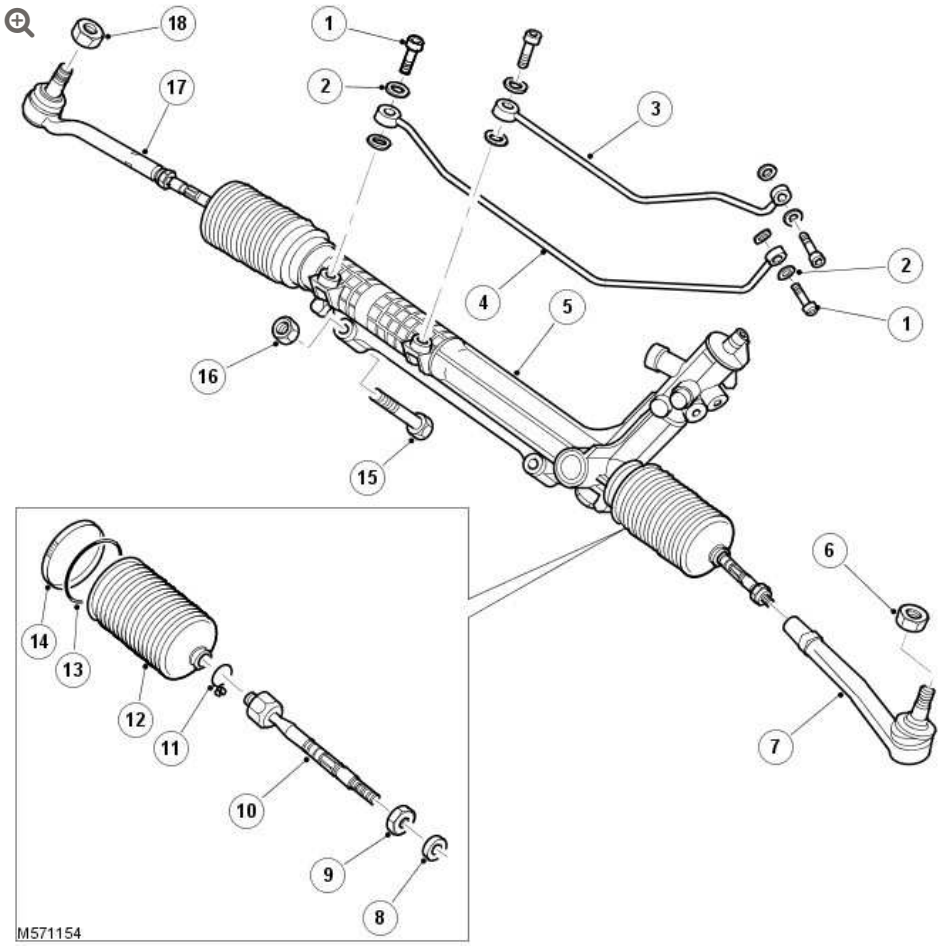

ITEM	DESCRIPTION
1	Banjo bolt (4 off)

ITEM	DESCRIPTION
2	Seal (8 off)
3	Pipe
4	Pipe
5	Steering gear
6	Nut M14
7	left-hand (LH) tie rod
8	Spacer
9	Locknut M16
10	Inner tie rod joint
11	Clamp (2 off)
12	Gaiter (2 off)
13	Seal (2 off)
14	Clamp (2 off)
15	Torx bolt M12 (2 off) - rack to subframe mounting
16	Nut M12 (2 off) - rack to subframe mounting
17	right-hand (RH) tie rod
18	Nut M14

The steering system comprises the mechanical steering gear, the valve and an integrated hydraulic power cylinder.

The steering gear uses a rack with an integrated piston which is guided on plain bearings within the gear housing. The pinion, which is attached to the valve runs in bearings and meshes with the rack teeth. The rack is pressed against the pinion by a spring loaded yoke which ensures that the teeth mesh without any play. The pinion is connected to the valve rotor via a torsion bar.

The rotary motion of the steering wheel is converted into axial movement of the rack by the pinion and is initiated by the valve. This motion is transferred into movement of the wheels by adjustable tie rod arms.

The rotary valve is used to control the pressurized fluid required for power assistance. The valve comprises a valve body, a control bush and a torsion bar. The valve body has eight control grooves in its bore. The control bush also has eight radial grooves which are matched to the valve. The control bush is positively attached to the pinion. The torsion bar is the connecting element between the valve body, the pinion and the control bush.

Torque input from the steering wheel is passed to the valve body and causes a rotary motion of the torsion bar. The valve body changes its relative position to the control bush and subsequently the relative positions of the control grooves is also changed. This allows pressurized fluid to pass via the mismatched grooves to the rack piston and provide the required assistance in the selected direction.

The piston is located at one end of the rack housing. Each side of the piston is connected to fluid pressure or fluid return via a metal external pipe which is connected to the valve housing.

Each end of the rack has a threaded hole which provides for the fitment of an inner tie rod joint. The external ends of the rack are sealed with gaiters which prevent the ingress of dirt and moisture. The inner tie rod joints have a long outer threaded shank which screws into the outer tie rod. The steering toe can be adjusted using the threaded end of the inner tie rod. When the correct toe is achieved, a locknut on the inner tie rod is tightened to prevent further inadvertent movement.

SERVOTRONIC TRANSDUCER VALVE

The Servotronic transducer valve is located in a port on the side of the steering gear valve housing. The valve is sealed in the housing with an O-ring seal and is secured with two long screws into threaded holes in the housing.

The Servotronic valve is a transducer controlled valve which responds to control signals supplied from the CJB. The CJB contains a microprocessor which receives road speed signals from the anti-lock brake system (ABS) module and calculates the correct controlling signal for the Servotronic valve. The Servotronic software within the CJB has a diagnostic capability which allows an approved Land Rover diagnostic system to check the tune of the steering.

The Servotronic valve determines the hydraulic reaction at the steering rack rotary valve and modifies the input torque required to turn the steering wheel. The Servotronic system allows the steering to be turned with minimum effort when the vehicle is stationary or manoeuvred at slow speed. The hydraulic reaction changes proportional to the vehicle speed, with the required steering effort increasing as the vehicle moves faster. At high speeds, the Servotronic system provides the driver with a good feedback through the steering providing precise steering and improved stability.

A major advantage of the Servotronic system is that fluid pressure and flow through the rotary valve remains constant and allows full steering pressure to be available in an emergency where a sudden and unexpected steering correction may be required.

POWER STEERING PUMP

POWER STEERING PUMP – V8 GASOLINE VEHICLES

The pump is a positive displacement, vane type pump which supplies hydraulic pressure to the steering gear valve unit. The pump is driven by a Poly Vee belt from the crankshaft pulley and output from the

pump increases proportionally with engine speed. A self-adjusting tensioner is fitted to maintain the correct tension on the belt.

The pump has an internal pressure relief valve which also incorporates a flow control valve. The pressure relief valve limits the maximum pressure supplied to the steering gear to 127 +/- 5 bar.

The flow control valve controls the flow to 10.0 liters/min regardless of engine speed.

The pump has a displacement of 14cc/rev.

For additional information, refer to: Specifications (211-02, Specifications).

A shaft runs longitudinally through the pump. One end of the shaft is fitted with a pressed-on drive pulley, the opposite end of the shaft is closed by a cover. The shaft runs in bearings located in the body and oil seals at each end of the shaft prevent leakage of hydraulic fluid.

The pump contains ten vanes which rotate within a cam ring and are driven by the shaft. As the vanes rotate, the cam ring causes the space between the vanes to increase. This causes a depression between the vanes and fluid is drawn from the reservoir via the suction hose into the space between the vanes.

As the shaft rotates, the inlet port is closed to the vanes which have drawn in fluid, trapping the fluid between the vanes. The cam ring causes the space between the vanes to reduce and consequentially compresses and pressurizes the hydraulic fluid trapped between them.

Further rotation of the shaft moves the vanes to the outlet port. As the vanes pass the port plate the pressurized fluid passes from the pump outlet port into the pressure hose to the steering gear.

The pressurized fluid is subject to control by the flow control and pressure relief valve. The flow control valve maintains a constant flow of fluid supplied to the steering gear irrespective of engine speed variations. The pressure relief valve modifies the pressure on the output side of the pump. A metering orifice is included in the discharge port of the pump. If the pressure in the orifice reaches a predetermined level, a spring loaded ball in the center of the flow control valve is lifted from its seat and allows pressurized fluid to recirculate within the pump.

The pressure relief valve will operate if the discharge from the pump is restricted; for example, steering held on full lock. If the output from the pump is blocked, all output is recirculated through the pump. In this condition, as no fresh fluid is drawn into the pump from the reservoir, the fluid temperature inside the pump will increase rapidly. Consequentially, periods of operation of the steering gear on full lock should be kept to a minimum to prevent overheating of the pump and the fluid within it.

POWER STEERING PUMP – V8 DIESEL VEHICLES

The pump is a variable displacement, vane type pump which supplies the required hydraulic pressure to the steering gear valve unit. The pump is located at the front of the engine and is driven by a Poly Vee belt which is directly driven from the crankshaft. A self-adjusting tensioner is fitted to maintain the correct tension on the belt.

The pump has an internal pressure relief valve which also incorporates a flow control valve. The pressure relief valve limits the maximum pressure supplied to the steering gear to: 122 +/- 4 bar.

The flow control valve controls the flow to 10.0 liters/min regardless of engine speed.

The pump has a displacement of 9.6cc/rev.

For additional information, refer to: Specifications (211-02, Specifications).

The output from the pump increases proportionally with the load applied to the steering valve unit. Inside the pump, a cartridge set consisting of 11 vanes and a rotor is mounted on the input shaft and is surrounded by the variable displacement cam.

The variable displacement pump maintains a constant fluid output by varying the internal displacement of the pump, unlike a conventional fixed displacement pump which has to use a flow control valve to recirculate the excess flow within the pump. At low engine speeds, the internal displacement of the variable displacement pump is at its maximum to generate the controlled fluid output.

As the pump speed increases with engine speed, the increased flow inside the pump generates a back pressure within the pump. This back pressure causes the cam ring to move and reduce the internal displacement of the pump to maintain the constant fluid flow from the pump. As the internal displacement of the pump decreases, the power and torque required to drive the pump reduces, which leads to improved fuel economy.

FLUID RESERVOIR

The fluid reservoir comprises a body, cap and filter. The purpose of the reservoir is to contain a surplus of the hydraulic fluid in the system to allow for expansion and contraction of the fluid due to temperature variations. The fluid level ensures that the supply connection on the bottom of the reservoir is covered with fluid at all operating vehicle attitudes. Any air which is present in the system is exhausted from the system in the reservoir.

The body is a plastic moulding with two ports at the bottom which provide for the connection of the suction supply and return hoses.

Moulded markings on the side of the reservoir denote the upper and lower fluid levels. A non-serviceable, 100 micron nylon mesh filter is fitted in the body. The filter removes particulate matter from the fluid before it is drawn into the pump supply connection.

The cap is rotated counterclockwise for one quarter turn to release from the body. The cap is fitted with an O-ring to prevent fluid leakage. The cap incorporates a breather hole to allow for changes in fluid level during operation and prevent vacuum or pressurization of the reservoir.

FLUID COOLER

The fluid cooler is located in the return line from the steering gear to the reservoir. The cooler comprises a flexible hose and a solid pipe which connect between the reservoir and the return pipe from the steering gear.

The cooler is a fabricated aluminium tube, through which the power steering fluid passes. The outer diameter of the cooler tube has aluminium loops attached to it which dissipate heat. Cool air entering the front of the vehicle passes over the cooler and flows through the loops. The loops act as heat exchangers, conducting heat from the fluid as it passes through the tube.

HIGH PRESSURE HOSE

The high pressure hose connecting the pump to the steering gear valve unit contains two attenuators. Each attenuator comprises a bullet shaped restrictor which is secured inside the hose. The restrictors damp pressure pulses from the pump, consequently reducing noise and strain on downstream components. The attenuators are an integral part of the hose and cannot be serviced separately.

HYDRAULIC CIRCUIT OPERATION

The following hydraulic circuits show power steering operation and fluid flow for the steering in a straight ahead, neutral position and when turning right. The circuit diagram for turning left is similar to that shown for turning right.

STEERING IN NEUTRAL POSITION

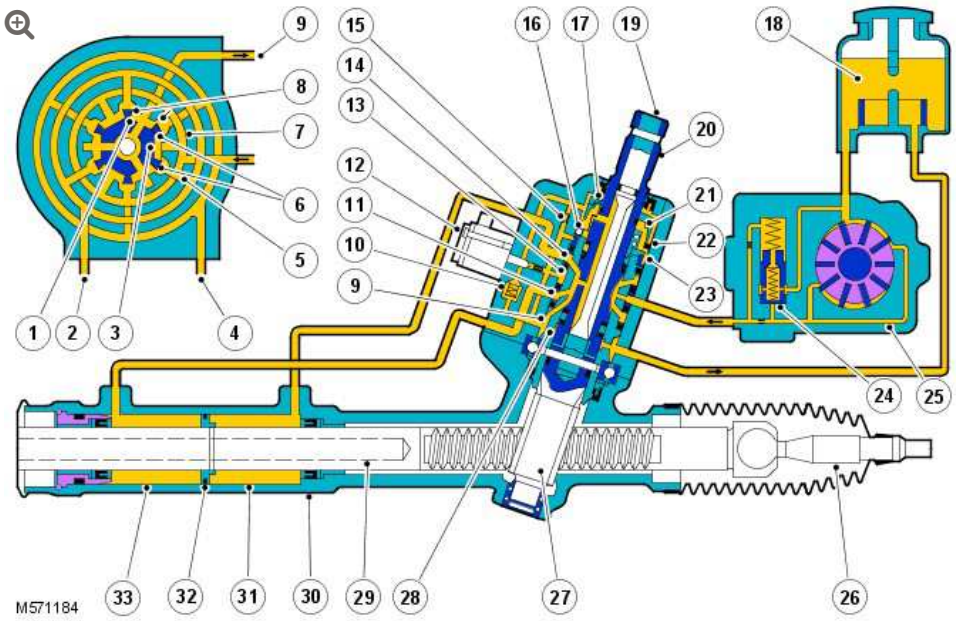

ITEM	DESCRIPTION
1	Return fluid control groove
2	Radial groove
3	Feed fluid control groove
4	Radial groove
5	Axial groove
6	Feed fluid control edge
7	Feed fluid radial groove
8	Return fluid control edge
9	Return fluid chamber
10	Cut-off valve

ITEM	DESCRIPTION
11	Radial groove
12	Servotronic transducer
13	Feed fluid radial groove
14	Radial groove
15	Orifice
16	Balls
17	Compression spring
18	PAS fluid reservoir
19	Torsion bar
20	Valve rotor
21	Reaction piston
22	Reaction chamber
23	Centering piece
24	Pressure relief/flow limiting valve
25	Power steering pump
26	Inner tie rod
27	Pinion
28	Valve sleeve
29	Steering gear
30	Gear housing
31	Power assist cylinder - right
32	Piston
33	Power assist cylinder - left

When the engine is started, the power steering pump draws fluid from the reservoir down the low pressure suction line. The fluid

passes through the pump and is delivered, via a hose, to the steering rack valve unit.

The pressurized fluid flows through a connecting bore in the valve and, via the feed fluid radial groove and the transverse bores in the valve sleeve, passes to the feed fluid control groove of the valve rotor.

In the neutral (straight ahead) position, the fluid passes over the open feed fluid control edges to all valve sleeve axial grooves. The fluid then passes through the open return fluid control edges and the return fluid control grooves of the valve rotor. The fluid then passes via connecting bores to the return fluid chamber and to the reservoir via an external hose.

Simultaneously, the radial grooves of the valve body and their associated pipes provide a connection between the left and right power assist cylinders.

STEERING IN RIGHT TURN POSITION

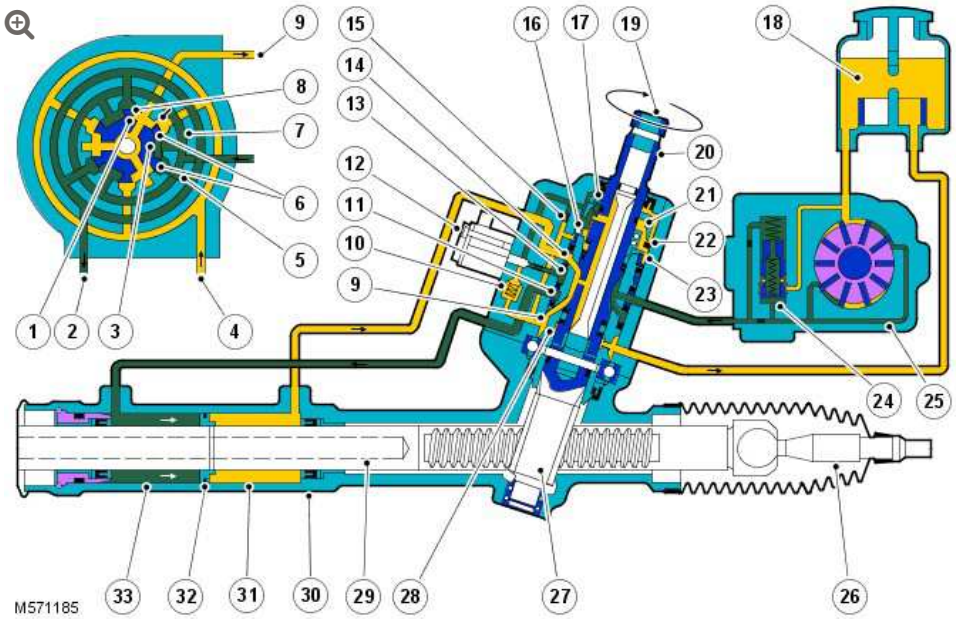

ITEM	DESCRIPTION
1	Return fluid control groove
2	Radial groove

ITEM	DESCRIPTION
3	Feed fluid control groove
4	Radial groove
5	Axial groove
6	Feed fluid control edge
7	Feed fluid radial groove
8	Return fluid control edge
9	Return fluid chamber
10	Cut-off valve
11	Radial groove
12	Servotronic transducer
13	Feed fluid radial groove
14	Radial groove
15	Orifice
16	Balls
17	Compression spring
18	Power steering fluid reservoir
19	Torsion bar
20	Valve rotor
21	Reaction piston
22	Reaction chamber
23	Centering piece
24	Pressure relief/flow limiting valve
25	Power steering pump
26	Inner tie rod
27	Pinion
28	Valve sleeve

ITEM	DESCRIPTION
29	Steering gear
30	Gear housing
31	Power assist cylinder - right
32	Piston
33	Power assist cylinder - left

When the steering wheel is turned to the right, the steering rack and piston moves to the left in the piston bore. The valve rotor is rotated to the right (clockwise) and pressurized fluid is directed over the further opened feed fluid control edges and to the associated axial grooves, the radial groove and via an external pipe to the left power assist cylinder chamber. The pressure applied to the piston from the left power assist cylinder chamber provides the hydraulic assistance.

An adaptable pressure build-up is achieved by the partially or fully closed feed fluid control edges restricting or preventing a connection between the fluid pressure inlet and the other axial grooves connected to the radial groove.

Simultaneously, the fluid pressure outlet to the pressurized axial grooves are restricted or partially restricted by the closing return fluid control edges. The fluid displaced by the piston from the right power assist cylinder chamber, flows through an external pipe to the radial grooves. From there the fluid passes to the associated axial grooves and on to the return fluid control grooves, via the further opened return fluid control edges. The return flow of fluid to the reservoir passes via interconnecting bores which lead to the return fluid chamber.

When the steering wheel is turned to the left the operating sequence is as above but the pressure is applied to the opposite side of the piston.

SERVOTRONIC OPERATION

When the vehicle is manoeuvred into and out of a parking space (or other similar manoeuvre), the Servotronic function of the CJB uses road speed data from the ABS module to determine the vehicle speed, which in this case will be slow or stationary. The CJB microprocessor analyses the signals and outputs an appropriate control current to the Servotronic transducer valve. The Servotronic valve closes and prevents fluid flowing from the feed fluid radial groove to the reaction chamber. An orifice also ensures that there is return pressure in the reaction chamber. This condition eliminates any 'reaction' ensuring that the steering is very light to operate, reducing the effort required to turn the steering wheel.

As the vehicle is driven and the road speed increases, the CJB microprocessor analyses the road speed signals from the ABS module and reduces the amount of control current supplied to the Servotronic valve. The Servotronic valve reacts to the control current and opens the valve by an amount appropriate to the road speed. This allows a controlled fluid supply from the feed fluid radial groove to the reaction chamber. The orifice prevents the loss of large amounts of fluid to the return fluid chamber. The higher fluid pressure acting on the reaction piston causes compression of the balls which are located between the reaction piston and the centering piece which in turn is securely connected to the valve sleeve. When driving in a straight line, this has a positive effect on the exact centralizing of the steering valve. When the steering valve is actuated, the balls, with a higher load on them, provide additional torsional resistance to rotation of the valve rotor. This mode of Servotronic assistance requires an established higher steering wheel torque until the hydraulic assistance required in the left or right power assist cylinder is determined.

At high driving speeds; for example on a highway, the Servotronic valve is fully open due to a very low or nonexistent control current supplied from the CJB. This enables maximum pressure supply from

the feed fluid radial groove to the reaction piston. When the steering wheel is turned, the reaction pressure increases appropriate to the existing operating pressure and pressurizes the piston in the reaction chamber. As soon as the reaction pressure reaches its upper limit, the fluid is discharged to the return fluid chamber via the cut-off valve and prevents further increases in reaction pressure. This maintains the input torque applied through the steering wheel and provides the driver with an improved 'road feel' allowing precise steering and directional stability.

2012.0 RANGE ROVER (LM), 211-02

POWER STEERING

DIAGNOSIS AND TESTING

PRINCIPLE OF OPERATION

For a detailed description of the power steering system operation, refer to the relevant description and operation sections of the workshop manual.

INSPECTION AND VERIFICATION

CAUTION:

Diagnosis by substitution from a donor vehicle is **NOT** acceptable. Substitution of control modules does not guarantee confirmation of a fault, and may also cause additional faults in the vehicle being tested and/or the donor vehicle

1. Verify the customer concern
2. Visually inspect for obvious signs of damage and system integrity

Visual Inspection

Mechanical	Electrical

▪ Check the power steering fluid level	▪ Fuses

CAUTION:

If a steering gear assembly is returned under warranty with leaking rack bar seals or high friction, but there is also damage to the steering gear boot/boots, tie-rods or rack bar teeth, then the steering gear warranty will be invalid. This is due to the steering gear rack bar seals being damaged due to foreign materials entering the steering gear boot and damaging the steering gear rack bar seals thereafter or because of bending from abusive/accident events

3. If an obvious cause for an observed or reported concern is found, correct the cause (if possible) before proceeding to the next step

4. If the concern is not visually evident, verify the symptom and refer to the symptom chart

DTC INDEX

For a list of Diagnostic Trouble Codes (DTCs) that could be logged on this vehicle, please refer to Section 100-00.

For Power Steering Solenoid (Actuator) DTCs on L320, L322;

For Power Steering Calibration DTCs on L319, L320, L322 -

REFER to: Diagnostic Trouble Code (DTC) Index - DTC: Central Junction Box (CJB) (100-00 General Information, Description and Operation).

For Power Steering Calibration DTCs on L320, L322 -

REFER to: Diagnostic Trouble Code (DTC) Index - DTC: Instrument Cluster (IC) (100-00 General Information, Description and Operation)

SYMPTOM CHARTS

WARNING:

It is not possible to CHECK the torque of a patch lock bolt, if the torque is suspected to be low, the bolt must be REMOVED/DISCARDED and a new bolt MUST be INSTALLED and torqued to the correct value (refer to the Specifications table in this section)

NOTE:

If the control module or a component is suspect and the vehicle remains under manufacturer warranty, refer to the Warranty Policy and Procedures manual, or determine if any prior approval programme is in operation, prior to the installation of a new module/component

POWER STEERING FLUID LEAKAGE

SYMPTOM	POSSIBLE CAUSES	ACTION
▪ Power steering fluid leakage	▪ Overfilled system	▪ Refer to the Power Steering Fluid Leaks pinpoint tests below GO to Pinpoint Test **A.**
	▪ Leak from steering gear	
	▪ Damaged fluid cap/reservoir	
	▪ Loose or damaged hoses and fittings	

SYMPTOM	POSSIBLE CAUSES	ACTION
	▪ Faulty or missing O-Ring or Dowty seals	
	▪ Leak from power steering fluid cooler	
	▪ Leak from power steering pump	

POWER STEERING PUMP OR STEERING RACK ISSUES CAUSING HEAVY OR UNEVEN STEERING

SYMPTOM	POSSIBLE CAUSES	ACTION
▪ Excessive steering efforts required both when the vehicle is in motion and during stationary manoeuvring	▪ Low power steering fluid or power steering fluid leak	▪ Refer to the Heavy Steering/Steering Has Uneven Effort pinpoint tests below GO to Pinpoint Test **L.**
	▪ Power steering pump output fluid delivery pressure or flow too low	
	▪ Power steering hose, fluid cooler or reservoir restriction	
	▪ Power steering fluid aeration	
	▪ Damaged front end accessory drive belt tensioner	▪ REFER to: Section 303-00 Engine System/General Information/Diagnosis and Testing
	▪ Steering transducer or cable fault	▪ Refer to the Heavy Steering/Steering Has Uneven Effort pinpoint tests below GO to Pinpoint Test **P.**

SYMPTOM	POSSIBLE CAUSES	ACTION
	▪ Speedometer signal error	
▪ Steering operation is very light when VEHICLE IS IN MOTION AT HIGHER SPEEDS, but when stationary manoeuvring is NORMAL	▪ Steering transducer or cable fault	▪ Refer to the Heavy Steering/Steering Has Uneven Effort pinpoint tests below GO to Pinpoint Test **P.**
	▪ Speedometer signal error	
▪ Steering operation is heavy when stationary manoeuvring, but improves when the engine speed is increased	▪ Power steering pump output fluid delivery pressure or flow too low	▪ Refer to the Heavy Steering/Steering Requires Uneven Effort pinpoint tests below GO to Pinpoint Test **N.**
▪ Steering operation is heavy in one direction	▪ Lower steering column interference	▪ Check the steering column is free from interference from the engine harness, sound proofing or the floor covering
	▪ Incorrect steering geometry/suspension damage	**NOTE:** Dealerships must keep a copy of the BEFORE and AFTER geometry figures with job card for future reference ▪ Check and adjust the front wheel alignment (REFER to: Section 204-00 Suspension System - General

SYMPTOM	POSSIBLE CAUSES	ACTION
		Information/General Procedures)
	▪ Faulty steering gear	▪ Refer to the Heavy Steering/Steering Has Uneven Effort pinpoint tests below GO to Pinpoint Test **L.**
	▪ Tire fouling on the wheel arch liner or suspension components	▪ Check for correct installation or damage to wheel arch liner and suspension components. Correctly install and install new components as required ▪ Check tire for correct size, type and pressure
	▪ Damaged steering gear transfer pipe	▪ Refer to the Power Steering Fluid Leaks From The Power Steering Rack pinpoint tests below GO to Pinpoint Test **D.**
	▪ Steering column universal joints binding or stiff	▪ REFER to: Pinpoint Tests within Section 211-04 Steering Column/Diagnosis and Testing/Steering Column
▪ Steering operation varies from heavy to light when driving at constant speed	▪ Lower steering column interference	▪ Check the steering column is free from interference from the engine harness, sound proofing or the floor covering
	▪ Steering transducer or cable fault	▪ Refer to the Heavy Steering/Steering Has Uneven Effort pinpoint tests below GO to Pinpoint Test **P.**

SYMPTOM	POSSIBLE CAUSES	ACTION
	▪ Incorrect speedometer signal	
	▪ Steering column universal joint binding or stiff	▪ REFER to: Pinpoint Tests within Section 211-03 Steering Linkage/Diagnosis and Testing/Steering Linkage
▪ Steering wanders when VEHICLE IS IN MOTION AT HIGHER SPEEDS	▪ Incorrect steering geometry/suspension damage	**NOTE:** Dealerships must keep a copy of the BEFORE and AFTER geometry figures with job card for future reference ▪ Check and adjust the front wheel alignment (REFER to: Section 204-00 Suspension System - General Information/General Procedures)
	▪ Tie-rod free play	▪ REFER to: Pinpoint Tests within Section 211-03 Steering Linkage/Diagnosis and Testing/Steering Linkage

POWER STEERING PUMP/STEERING RACK NOISE

SYMPTOM	POSSIBLE CAUSES	ACTION
▪ Continuous noise	▪ Low power steering fluid or power steering fluid leak	▪ Refer to the Power Steering Pump/Steering Rack Noise - System Fluid Leak Checks pinpoint tests below, GO to Pinpoint Test **F.**

SYMPTOM	POSSIBLE CAUSES	ACTION
	NOTE: Look for small air bubbles visible in the fluid, air may also get trapped in the hydraulic system	▪ Bleed air from system (REFER to: Section 211-00 Steering System - General Information/General Procedures/Power Steering System Bleeding)
	▪ Air in hydraulic system	
	▪ Power steering pipe/hose in contact with the vehicle body ▪ Power steering pipe/hose restricted or twisted	▪ Refer to the Power Steering Pump/Steering Rack Noise – Power Steering System Hose Checks pinpoint tests below, GO to Pinpoint Test **G.**
	▪ Power steering pump mounting bolts loose	▪ Check and adjust torque of bolts as required (REFER to: Section 211-02 Power Steering/Specification)
	▪ Power steering pump worn or otherwise defective	▪ Refer to the Power Steering Pump/Steering Rack Noise – Power Steering System Hose Checks pinpoint tests below, GO to Pinpoint Test **G.** ▪ Install a new power steering pump as required (REFER to: Section 211-02 Power Steering/Removal and Installation)
▪ Noise gets worse when system is loaded		▪ Refer to the Power Steering Pump/Steering Rack Noise - System Fluid Leak Checks pinpoint tests

SYMPTOM	POSSIBLE CAUSES	ACTION
	NOTE: Refer to the power steering pressure check in this section ▪ Low power steering fluid level ▪ Aerated fluid ▪ Low power steering pump pressure	below GO to Pinpoint Test **F.**
▪ Front end accessory drive belt squeal (see definitions of steering system noises below)	▪ Front end accessory drive belt incorrectly tensioned or glazed	▪ Refer to the Power Steering Pump/Steering Rack Noise - Noise Specific Diagnostics (Belt Squeal) pinpoint tests below GO to Pinpoint Test **H.**
▪ Chirp noise (see definitions of steering system noises below) from the steering pump when a load is applied	▪ Loose or worn front end accessory drive belt	▪ Refer to the Power Steering Pump Drive Belt Checks - Belt Damage Checks (Chirp Noise) pinpoint tests below GO to Pinpoint Test **H.**
▪ Knock, creak, rattle or clonk noise (see definitions of steering system noises below)	▪ Steering gear mounting bolts loose or damaged	▪ Check and adjust torque of bolts as required (REFER to: Section 211-02 Power Steering/Specification)
	▪ Tie-rod end joint to steering knuckle loose or damaged	▪ REFER to: Pinpoint Tests within Section 211-03 Steering Linkage/Diagnosis and Testing/Steering Linkage
	▪ Wear in steering gear tie-rod end ball joints	

SYMPTOM	POSSIBLE CAUSES	ACTION
	▪ Wear in steering gear inner ball joints	
	▪ Excess play in the steering gear	

DIAGNOSTIC PROCEDURES FOR POWER STEERING FLUID LEAKS

CAUTION:

Be aware that leaks in the power steering system may allow power steering fluid may escape from the system under high pressure

CAUTION:

Misting/Dampness around pinions, bellows and on the rack bar can be mis-diagnosed as leaks. This is normal and suspected leaks should always be verified by cleaning and chalking. Refer to Component Checks in this section for guidance on identification of leaks

PINPOINT TEST A : POWER STEERING FLUID LEAKS - ESTABLISHING THE SOURCE OF FLUID LEAKS	
TEST CONDITIONS	DETAILS/RESULTS/ACTIONS
A1: ESTABLISHING THE SOURCE OF THE LEAK	
	1 Remove any shielding or undertrays as necessary to gain visual access to locate leak. Refer to the relevant sections in the workshop manual for guidance on removal procedures

PINPOINT TEST A : POWER STEERING FLUID LEAKS - ESTABLISHING THE SOURCE OF FLUID LEAKS	
	2 Using a suitable cleaning solution, thoroughly clean around the affected areas to remove dirt, oil and any other debris
	3 Apply chalk dust to the affected area
	4 Check the level of the power steering system fluid in the reservoir. If level is above the MAX level remove fluid with a suitable device until level is at MAX. If fluid is below the MAX level top up to the MAX level as required
	5 To instigate the leak, start the engine and turn the steering wheel from lock to lock 3 times, re-check fluid level and repeat (Caution: do not hold the steering on full lock)
	Is the power steering fluid leak visually evident? **Yes** For leaks from the power steering fluid reservoir or reservoir hose connection GO to Pinpoint Test **B.** For leaks from the power steering pump body or pump hose connection GO to Pinpoint Test **C.** For leaks from the steering rack or steering rack hose connection GO to Pinpoint Test **D.**

PINPOINT TEST B : POWER STEERING FLUID LEAKS FROM THE POWER STEERING FLUID RESERVOIR	
TEST CONDITIONS	DETAILS/RESULTS/ACTIONS
B1: LOCATION OF THE RESERVOIR LEAK - LEAKS FROM RESERVOIR BODY	
	1
	Is the leak from the reservoir body? **Yes** Replace the power steering fluid reservoir assembly When all remedial actions have been completed, perform final check for leaks GO to Pinpoint Test **E.** **No** **GO to B2**.
B2: LOCATION OF THE RESERVOIR LEAK - LEAKS FROM RESERVOIR FILLER CAP	
	1
	Is the leak from the filler reservoir cap?

PINPOINT TEST B : POWER STEERING FLUID LEAKS FROM THE POWER STEERING FLUID RESERVOIR	
	Yes Replace the power steering fluid reservoir filler cap assembly When all remedial actions have been completed, perform final check for leaks GO to Pinpoint Test **E.** **No** GO to B3.
B3: LOCATION OF THE RESERVOIR LEAK - LEAKS FROM RESERVOIR HOSES/HOSE CONNECTIONS	
	1
	Is the leak from the hoses or hose connections at (or around) the reservoir? **Yes** Check the hose is located fully onto the spigot and that the securing clip is installed correctly. If a quick connector is used, ensure that it is correctly installed by pushing connector fully onto the spigot, (a small click maybe heard), and then pulling it back to check for a secure connection If a quick connector is used, check inside the connector body for damaged O-Ring(s) and replace hose as required Check the bore of the hose for axial scores, cuts or abrasions and replace defective hose as required When all remedial actions have been completed, perform final check for leaks GO to Pinpoint Test **E.**

PINPOINT TEST C : POWER STEERING FLUID LEAKS FROM THE POWER STEERING FLUID PUMP	
TEST CONDITIONS	**DETAILS/RESULTS/ACTIONS**
C1: LOCATION OF THE PUMP LEAK - LEAKS FROM PUMP BODY	
	1
	Is the leak from the pump body? **Yes** Check the pump front seal for leaks and replace power steering pump as required When all remedial actions have been completed, perform final check for leaks GO to Pinpoint Test **E.** **No** GO to C2.
C2: LOCATION OF THE PUMP LEAK - LEAKS FROM PUMP HOSES/HOSE CONNECTIONS	
	1

PINPOINT TEST C : POWER STEERING FLUID LEAKS FROM THE POWER STEERING FLUID PUMP	
	Is the leak from the hoses or hose connections at (or around) the pump? **Yes** Check the hose is located fully onto the spigot and that the securing clip is installed correctly Check the bore of the hose for axial scores, cuts or abrasions and replace defective hose as required Check the torque of the power steering hose screws/banjo bolts and adjust as required (for torque settings refer to the Specifications table in this section). If a patch lock screw/bolt is used it should be replaced Check the outlet port of the pump for damage (i.e. scoring or cross threading) and replace pump as required Check the thread on the power steering hose connector for damage and replace hose as required Check hose crimp for leaks and replace hose as required Check inside the quick connector body for damaged O-Ring (s) and replace hose as required Check O-Rings/Dowty Washers on hose for damage and replace as required When all remedial actions have been completed, perform final check for leaks GO to Pinpoint Test **E.** **No** GO to Pinpoint Test **D.**

NOTE:

THIS DIAGNOSTIC STEP **ONLY** APPLIES TO L320 & L322, FOR ALL OTHER VEHICLES CONTINUE TO THE NEXT PINPOINT TEST

CAUTIONS:

- If a steering gear assembly is returned under warranty with leaking rack bar seals, but there is also damage to the steering gear boot/boots (refer to Component Tests in this section for guidance on how to check for steering gear boot damage), then the steering gear warranty will be invalid. This is due to the steering gear rack bar seals being damaged due to foreign materials entering the steering gear boot and damaging the steering gear rack bar seals thereafter
- If a steering gear assembly is returned under warranty with leaking rack bar seals, induced by abusive steering loads, the steering gear warranty will be invalid. Guidance on identification of abusive loads via tie-rod inspection can be found in the Tie-Rod Checks in Section 211-03 – Steering Linkage/Diagnosis and Testing/Steering Linkage/Component Tests

PINPOINT TEST D : POWER STEERING FLUID LEAKS FROM THE POWER STEERING RACK	
TEST CONDITIONS	DETAILS/RESULTS/ACTIONS
D1: LOCATION OF THE STEERING RACK LEAK - LEAKS FROM THE INPUT SHAFT SEAL	
	1 Check for leaks from the steering rack input shaft seal (refer to Component Checks in this section for guidance in identifying leaks)
	Is the leak from the input shaft seal? **Yes** For all vehicles **EXCEPT L319** - Replace the steering rack **For L319 ONLY** - Replace the input shaft seal using the appropriate service kit (REFER to: Technical Bulletin LTB00154v3 for further guidance) When all remedial actions have been completed, perform final check for leaks GO to Pinpoint Test **E.** **No** GO to D2.

PINPOINT TEST D : POWER STEERING FLUID LEAKS FROM THE POWER STEERING RACK	
D2: LOCATION OF THE STEERING RACK LEAK - LEAKS FROM THE STEERING GEAR TRANSFER PIPES	
	1
	Is the leak from the steering gear transfer pipes? **Yes** Replace the transfer pipes (REFER to: Section 211-02 Power Steering/Removal and Installation) When all remedial actions have been completed, perform final check for leaks GO to Pinpoint Test **E.** **No** GO to D3.
D3: LOCATION OF THE STEERING RACK LEAK - LEAKS FROM THE STEERING GEAR BOOTS	
	1
	Is the leak from the steering gear boots? **Yes** Remove steering gear boots Check for fluid (either water or hydraulic fluid) inside the steering gear boots. If fluid is present, replace the steering gear When all remedial actions have been completed, perform final check for leaks GO to Pinpoint Test **E.** **No** GO to D4.
D4: LOCATION OF THE STEERING RACK LEAK - LEAKS FROM STEERING RACK HOSES/HOSE CONNECTIONS	
	1
	Is the leak from the hoses or hose connections at (or around) the steering rack? **Yes** Check the torque of the identified power steering hose screws/banjo bolts and adjust as required (for torque settings refer to the Specifications table in this section). If a patch lock screw/bolt is used it should be replaced Check hose crimp for leaks and replace hose as required Check the thread on the power steering hose connector for damage (where applicable) and replace hose as required Check O-Rings/Dowty Washers on hose for damage and replace as required When all remedial actions have been completed, perform final check for leaks GO to Pinpoint Test **E.** **No**

PINPOINT TEST D : POWER STEERING FLUID LEAKS FROM THE POWER STEERING RACK	
	When all remedial actions have been completed, perform final check for leaks GO to Pinpoint Test **E.**

PINPOINT TEST E : POWER STEERING FLUID LEAKS - FINAL CHECKS	
TEST CONDITIONS	DETAILS/RESULTS/ACTIONS
E1: AFTER COMPLETING THE ACTIONS ABOVE, CHECK AGAIN FOR LEAKS USING THE FOLLOWING PROCEDURES	
	1 Top up power steering fluid to MAX level and bleed the system (REFER to: Section 211-00 Steering System - General Information/General Procedures)
	2 Start the engine and turn the steering wheel fully (lock to lock) 3 times. Switch off engine
	3 Check the level of the power steering fluid in the reservoir and top up as required
	4 Start the engine and turn the steering wheel fully (lock to lock) 3 times. Switch off engine
	5 Visually check for fluid leaks from the power steering system
	Are there any fluid leaks present? **Yes** Repeat diagnostics steps above. GO to Pinpoint Test **A.** **No** No further action required

DIAGNOSTIC PROCEDURES FOR POWER STEERING PUMP/STEERING RACK NOISE

Specific Steering System Noise Types

See below for a glossary of terms describing the most common noises that may indicate a fault with the power steering system:

BELT SQUEAL

Belt squeal is a high frequency air-borne noise generated by slippage of the ribbed Vee belt on the power steering pump pulley. Squeal increases with system loading and at full lock

CHIRP

High pitched rapidly repeating sound, like chirping birds

GRUNT (SQUAWK/WHOOP)

Grunt is a 'honking' sound elicited when coming off one of the steering stops. Grunt is generally excited during parking manoeuvres with a low to medium speed steering input. This noise can occur when the power steering system is hot

KNOCK

Knock is a heavy, loud repeating sound like a knock on a door

MOAN (GROAN)

Moan is the general structure-borne noise of the steering system. Moan is primarily transmitted to the driver via the body structure through the pump mount, engine mounts, power steering lines and power steering brackets. On some vehicles, moan is a loud humming noise, often present when the wheel is turned and the system is loaded. It may change frequency with engine RPM and if the system is loaded or unloaded

RATTLE

A sound suggesting looseness, like marbles rolling around in a can

WHINE

A high-pitched buzzing sound, like an electric motor or drill

ZIP

Zip noise is the air-borne noise generated by power steering pump cavitation when power steering fluid does not flow freely through the suction hose from the reservoir to the pump. Zip primarily occurs during cold weather at start-up

DIAGNOSTIC STEPS FOR POWER STEERING PUMP/STEERING RACK NOISE

PINPOINT TEST F : POWER STEERING PUMP/STEERING RACK NOISE - SYSTEM FLUID LEAK CHECKS	
TEST CONDITIONS	DETAILS/RESULTS/ACTIONS
F1: CHECK FOR POWER STEERING FLUID LEAKS	
	1 Check that the power steering fluid in the reservoir is not below the MIN mark
	Is the fluid level low? **Yes** Top up the fluid reservoir, then check if the power steering pump/steering rack noise is still evident If the noise symptoms are **no longer** evident, GO to Pinpoint Test **A.** to find and fix fluid leaks If the noise symptoms are **still** evident, first work through the power steering system fluid leak pinpoint test GO to Pinpoint Test **A.** , then GO to Pinpoint Test **G.** **No** GO to Pinpoint Test **G.**

PINPOINT TEST G : POWER STEERING PUMP/STEERING RACK NOISE - NOISE SPECIFIC DIAGNOSTICS (GRUNT/MOAN/WHINE/WHOOP)	
TEST CONDITIONS	DETAILS/RESULTS/ACTIONS
G1: IDENTIFY THE SPECIFIC TYPE OF POWER STEERING SYSTEM NOISE PRESENT - GRUNT/MOAN/WHINE/WHOOP DIAGNOSTICS	
	1 Ascertain the specific type of noise present in the power steering system (see glossary of noise terms above)
	Is the noise either a grunt, moan, whine or whoop? **Yes** GO to G2. **No** GO to Pinpoint Test **H.**
G2: GRUNT/MOAN/WHINE/WHOOP DIAGNOSTICS - CHECK THE POWER STEERING SYSTEM FLUID RESERVOIR	
	1 Flush the power steering system

PINPOINT TEST G : POWER STEERING PUMP/STEERING RACK NOISE - NOISE SPECIFIC DIAGNOSTICS (GRUNT/MOAN/WHINE/WHOOP)	
	Is power steering system noise still evident? **Yes** GO to G3. **No** When all remedial actions have been completed, perform final checks for steering system noise GO to Pinpoint Test K.
G3: GRUNT/MOAN/WHINE/WHOOP DIAGNOSTICS - POWER STEERING HYDRAULIC SYSTEM BLOCKAGE CHECKS	
	1 Ensure the power steering fluid is cold
	2 Insert a temperature probe into the power steering fluid reservoir and connect to a suitable digital thermometer
	3 Start the engine and allow to idle for 5 minutes. Then check the power steering fluid temperature
	Is the power steering fluid temperature greater than 80 degrees Celsius? **Yes** Check for hydraulic system blocks at the power steering fluid reservoir. Remove a small amount of fluid and use a mirror to visually check the state of the filter in the reservoir (for guidance on filter blockage refer to Component Tests in this section). If the filter mesh is more than 30% blocked, then replace the reservoir assembly. When all remedial actions have been completed GO to G4. If the filter mesh is less than 30% blocked, check power steering hydraulic hoses for kinks and replace as required. Allow the power steering fluid to cool to 20 degrees Celsius. Start the engine and allow to idle for 5 minutes. Then check the power steering fluid temperature. If the power steering fluid temperature is greater than 80 degrees Celsius, proceed to power steering system pressure checks GO to G5. . If the power steering fluid temperature is less than 80 degrees Celsius, GO to G4. **No** GO to G4.
G4: GRUNT/MOAN/WHINE/WHOOP DIAGNOSTICS - POWER STEERING SYSTEM HOSE CHECKS	
	1 Check that the power steering system hoses are correctly installed and correctly routed and rectify as required
	2 Check the power steering system hoses for damage and rectify as required
	3

PINPOINT TEST G : POWER STEERING PUMP/STEERING RACK NOISE - NOISE SPECIFIC DIAGNOSTICS (GRUNT/MOAN/WHINE/WHOOP)	
	Check the integrity of the power steering system hose clips and brackets. Replace any defective clips/brackets as required
	4 Check that the power steering system hoses are securely clipped into position. Rectify as required
	5 Check the torque of the screws/nuts securing the power steering system clips/brackets, the power steering pump and the power steering pump mounting bracket. Adjust or replace fixings as required
	Is the power steering system noise still present? **Yes** If noise is still evident, proceed to power steering system pressure checks, **GO to G5**. **No** When all remedial actions have been completed, perform final checks for steering system noise GO to Pinpoint Test **K.**
G5: GRUNT/MOAN/WHINE/WHOOP DIAGNOSTICS - POWER STEERING SYSTEM PRESSURE CHECKS	
	1 Refer to the relevant section of the workshop manual and conduct a power steering system pressure test
	Is the power steering system pressure within specified tolerances? **Yes** GO to Pinpoint Test **H.** **No** Replace the power steering pump Check again for power steering system noise. If noise is rectified, perform final checks for steering system noise GO to Pinpoint Test **K.** If noise is still evident, GO to Pinpoint Test **H.**

PINPOINT TEST H : POWER STEERING PUMP/STEERING RACK NOISE - NOISE SPECIFIC DIAGNOSTICS (BELT SQUEAL)	
TEST CONDITIONS	**DETAILS/RESULTS/ACTIONS**
H1: IDENTIFY THE SPECIFIC TYPE OF POWER STEERING SYSTEM NOISE PRESENT	
	1 Ascertain the specific type of noise present in the power steering system (see glossary of noise terms above)

PINPOINT TEST H : POWER STEERING PUMP/STEERING RACK NOISE - NOISE SPECIFIC DIAGNOSTICS (BELT SQUEAL)	
	Is the noise belt squeal? **Yes** GO to H2. **No** GO to Pinpoint Test J.
H2: POWER STEERING PUMP DRIVE BELT CHECKS - FLUID LEAKS	
	1 Check for signs of fluid leakage on to the power steering pump drive belt
	Is there signs of fluid on the power steering pump drive belt? **Yes** GO to H3. **No** GO to H4.
H3: POWER STEERING PUMP DRIVE BELT CHECKS - IDENTIFY SOURCE OF FLUID LEAKS	
	1 Identify the type of fluid that has leaked on to the power steering pump drive belt
	Is it power steering fluid? **Yes** First, work through the power steering system fluid leak pinpoint tests GO to Pinpoint Test F. , then replace the power steering pump drive belt, check and adjust the drive belt alignment as required Check again for power steering system noise. If noise is rectified, perform final checks for steering system noise GO to Pinpoint Test K. If noise is still evident, GO to H4. **No** Clean/remove the leaked fluid from the power steering pump drive belt Identify any other sources of fluid leaks and rectify leaks as required Check again for power steering system noise. If noise is rectified, perform final checks for steering system noise GO to Pinpoint Test K. If noise is still evident, GO to H4.
H4: POWER STEERING PUMP DRIVE BELT CHECKS - BELT DAMAGE CHECKS (CHIRP NOISE)	
	1 Check the integrity of the power steering pump drive belt
	Is the power steering pump drive belt damaged, frayed or glazed? **Yes**

PINPOINT TEST H : POWER STEERING PUMP/STEERING RACK NOISE - NOISE SPECIFIC DIAGNOSTICS (BELT SQUEAL)	
	Replace the power steering pump drive belt, check and adjust the drive belt alignment as required Check again for power steering system noise. If noise is rectified, perform final checks for steering system noise GO to Pinpoint Test **K.** If noise is still evident, GO to Pinpoint Test **I.** **No** The noise issue is not belt squeal, for further diagnostics GO to Pinpoint Test **I.**

NOTE:

THIS DIAGNOSTIC STEP **ONLY** APPLIES TO L320, FOR ALL OTHER VEHICLES CONTINUE TO THE NEXT PINPOINT TEST

PINPOINT TEST I : POWER STEERING PUMP/STEERING RACK NOISE - NOISE SPECIFIC DIAGNOSTICS (SQUEAK)	
THIS DIAGNOSTIC STEP **ONLY** APPLIES TO L320, FOR ALL OTHER VEHICLES CONTINUE TO THE NEXT PINPOINT TEST	
TEST CONDITIONS	**DETAILS/RESULTS/ACTIONS**
I1: IDENTIFY THE SPECIFIC TYPE OF POWER STEERING SYSTEM NOISE PRESENT	
	1 Ascertain the specific type of noise present in the power steering system (see glossary of noise terms above)
	Is the noise squeak? **Yes** Replace the power steering system damper valves (REFER to: Technical Bulletin LTB00021 for further guidance) **No** GO to Pinpoint Test **J.**

PINPOINT TEST J : POWER STEERING PUMP/STEERING RACK NOISE - NOISE SPECIFIC DIAGNOSTICS (CLONK, KNOCK, RATTLE, CREAK)	
TEST CONDITIONS	**DETAILS/RESULTS/ACTIONS**

PINPOINT TEST J : POWER STEERING PUMP/STEERING RACK NOISE - NOISE SPECIFIC DIAGNOSTICS (CLONK, KNOCK, RATTLE, CREAK)	
J1: IDENTIFY THE SPECIFIC TYPE OF POWER STEERING SYSTEM NOISE PRESENT	
	1 Ascertain the specific type of noise present in the power steering system (see glossary of noise terms above)
	Is the noise a clonk, knock, rattle or creak? **Yes** GO to J2.
J2: STEERING RACK BOLT CHECKS	
	1 Refer to the relevant section of the workshop manual and check that the steering rack bolts are secured to the correct torque specifications (for torque settings refer to the Specifications table in this section)
	Are the steering rack bolts are secured to the correct torque specifications? (for torque settings refer to the Specifications table in this section) **Yes** REFER to: Section 211-04 Steering Column/Diagnosis and Testing/Steering Column/Pinpoint Tests/Steering Column Noise - Noise Specific Diagnostics (Clonk/Column Knock) / Check For Clonk/Column Knock Noise From Lower Steering Column Shaft **No** Remove and replace the steering rack fixings as required. Ensure new fixings are tightened to the correct torque specifications (for torque settings refer to the Specifications table in this section) Check again for power steering system noise. If noise is rectified, perform final checks for steering system noise GO to Pinpoint Test **K.** If noise is still evident, REFER to: Section 211-04 Steering Column/Diagnosis and Testing/Steering Column/Pinpoint Tests/Steering Column Noise - Noise Specific Diagnostics (Clonk/Column Knock) / Check For Clonk/Column Knock Noise From Lower Steering Column Shaft

PINPOINT TEST K : POWER STEERING PUMP/STEERING RACK NOISE - FINAL CHECKS	
TEST CONDITIONS	DETAILS/RESULTS/ACTIONS
K1: AFTER COMPLETING THE ACTIONS ABOVE, CHECK AGAIN FOR POWER STEERING SYSTEM NOISE USING THE FOLLOWING PROCEDURES	

PINPOINT TEST K : POWER STEERING PUMP/STEERING RACK NOISE - FINAL CHECKS	
	1 Start the engine and turn the steering wheel fully (lock to lock) 3 times. Check for power steering noise during this procedure
	2 Test drive the vehicle and check for power steering noise
	3 Check the temperature of the power steering fluid. Once the power steering temperature exceeds 80 degrees Celsius, repeat steps 1 and 2 above
	Is there still noise emanating from the steering system? **Yes** Repeat the diagnostic steps above, or check other vehicle systems for the source of the noise **No** No further action

DIAGNOSTIC STEPS FOR HEAVY STEERING/STEERING REQUIRES UNEVEN EFFORT

PINPOINT TEST L : HEAVY STEERING/STEERING HAS UNEVEN EFFORT - SYSTEM FLUID LEAK CHECKS	
TEST CONDITIONS	DETAILS/RESULTS/ACTIONS
L1: CHECK FOR POWER STEERING FLUID LEAKS	
	1 Check that the power steering fluid in the reservoir is not below the MIN mark
	Is the fluid level low? **Yes** Top up the fluid reservoir, then check if the heavy steering/steering has uneven effort symptoms are still evident If the symptoms are **no longer** evident, GO to Pinpoint Test **A.** to find and fix fluid leaks If the symptoms are **still** evident, first work through the power steering system fluid leak pinpoint tests GO to Pinpoint Test **A.** , then GO to Pinpoint Test **M.** **No** GO to Pinpoint Test **M.**

PINPOINT TEST M : HEAVY STEERING/STEERING REQUIRES UNEVEN EFFORT - CHECK FOR FLUID RESERVOIR BLOCKAGES	
TEST CONDITIONS	DETAILS/RESULTS/ACTIONS
M1: POWER STEERING SYSTEM FLUID RESERVOIR CHECKS	
	1 Check for hydraulic system blocks at the power steering fluid reservoir. Remove a small amount of fluid and use a mirror to visually check the state of the filter in the reservoir (for guidance on filter blockage refer to Component Tests in this section). The filter mesh should not be more than 30% blocked
	Is the reservoir filter blocked? **Yes** GO to Pinpoint Test **N.** **No** GO to Pinpoint Test **O.**

PINPOINT TEST N : HEAVY STEERING/STEERING REQUIRES UNEVEN EFFORT - REPLACE FLUID RESERVOIR	
TEST CONDITIONS	DETAILS/RESULTS/ACTIONS
N1: REPLACE THE POWER STEERING SYSTEM FLUID RESERVOIR	
	1 Flush the power steering system
	2 Replace the power steering system fluid reservoir
	3 Refill the power steering system to the MAX level using the manufacturer approved power steering fluid
	4 Bleed the power steering system (REFER to: Section 211-00 Steering System - General Information/General Procedures)
	Is the steering still heavy or requiring uneven effort? **Yes** GO to Pinpoint Test **O.** **No** When all remedial actions have been completed, perform final checks for heavy or uneven steering effort GO to Pinpoint Test **Q.**

PINPOINT TEST O : HEAVY STEERING/STEERING REQUIRES UNEVEN EFFORT - POWER STEERING SYSTEM HOSE ROUTING/INTEGRITY CHECKS	
TEST CONDITIONS	DETAILS/RESULTS/ACTIONS
O1: HOSE ROUTING/INTEGRITY CHECKS	
	1 Check the power steering system hoses for correct routing
	2 Check the power steering system hoses for and damage or kinks
	3 Check the power steering system hoses are securely and correctly clipped into position
	Are there any issues with the routing, security or integrity of the power steering system hoses? **Yes** Rectify as required, ensuring that the clips are in good condition (replace any defective clips) and that clips are securely tightened Check again for heavy steering or steering requiring uneven effort. If fault is rectified, perform final checks for heavy or uneven steering effort GO to Pinpoint Test **Q.** If fault is still evident, proceed to power steering system pressure checks, **GO to O2**. **No** **GO to O2**.
O2: POWER STEERING SYSTEM PRESSURE CHECKS	
	1 Refer to the relevant section of the workshop manual and conduct a power steering system pressure test
	Is the power steering system pressure within specified tolerances? **Yes** GO to Pinpoint Test **P.** **No** Replace the power steering pump Check again for heavy steering or steering requiring uneven effort. If fault is rectified, perform final checks for heavy or uneven steering effort GO to Pinpoint Test **Q.** If fault is still evident, proceed to power steering solenoid checks, GO to Pinpoint Test **P.**

NOTE:

THIS DIAGNOSTIC STEP **ONLY** APPLIES TO L320 & L322, FOR ALL OTHER VEHICLES CONTINUE TO THE NEXT PINPOINT TEST

PINPOINT TEST P : HEAVY STEERING/STEERING REQUIRES UNEVEN EFFORT - POWER STEERING SOLENOID CHECKS	
THIS DIAGNOSTIC STEP **ONLY** APPLIES TO L320 & L322, FOR ALL OTHER VEHICLES CONTINUE TO THE NEXT PINPOINT TEST	
TEST CONDITIONS	**DETAILS/RESULTS/ACTIONS**
P1: CHECK THE OPERATION OF THE POWER STEERING SOLENOID	
	1 Using the manufacturer approved diagnostic system, check for related DTCs and refer to the relevant DTC index
	2 Check the operation of the power steering solenoid
	Is the power steering solenoid functioning correctly? **Yes** REFER to: Section 211-03 Steering Linkage/Diagnosis and Testing/Steering Linkage/Pinpoint Tests/ Heavy Steering/Steering Requires Uneven Effort – Steering System Free Play Checks / Outer Ball Joint Checks / Inner Ball Joint Checks **No** Using the manufacturer approved diagnostic system, check for related DTCs and refer to the relevant DTC index Check again for heavy steering or steering requiring uneven effort. If fault is rectified, perform final checks for heavy or uneven steering effort GO to Pinpoint Test **Q.** If fault is still evident, **GO to P2**.
P2: REPLACE THE STEERING RACK SOLENOID	
	1 Replace the steering rack solenoid
	Is the steering still heavy or requiring uneven effort? **Yes** REFER to: Section 211-03 Steering Linkage/Diagnosis and Testing/Steering Linkage/Pinpoint Tests/ Heavy Steering/Steering Requires Uneven Effort – Steering System

PINPOINT TEST P : HEAVY STEERING/STEERING REQUIRES UNEVEN EFFORT - POWER STEERING SOLENOID CHECKS	
	Free Play Checks / Outer Ball Joint Checks / Inner Ball Joint Checks **No** When all remedial actions have been completed, perform final checks for heavy or uneven steering effort GO to Pinpoint Test **Q.**

PINPOINT TEST Q : HEAVY STEERING/STEERING REQUIRES UNEVEN EFFORT - FINAL CHECKS	
TEST CONDITIONS	**DETAILS/RESULTS/ACTIONS**
Q1: AFTER COMPLETING THE ACTIONS ABOVE, CHECK AGAIN FOR HEAVY STEERING OR STEERING REQUIRING UNEVEN EFFORT USING THE FOLLOWING PROCEDURES	
	1 Start the engine and turn the steering wheel fully (lock to lock) 3 times. Check for heavy or uneven steering effort during this procedure
	2 Test drive the vehicle and check for heavy or uneven steering effort
	3 Check the temperature of the power steering fluid. Once the power steering temperature exceeds 80 degrees Celsius, repeat steps 1 and 2 above
	Is there still evidence of heavy or uneven steering effort? **Yes** Repeat the diagnostic steps above, or check other vehicle systems for the source of the problem **No** No further action

COMPONENT TESTS

RESERVOIR BLOCKAGE

Remove reservoir cap and (using a mirror) visually inspect the power steering fluid reservoir filter for signs of blockage. It is normal that a small amount of debris could be on the filter.

The filter mesh should not be more than 30% blocked (as in left-hand picture below), if the mesh is more than 30% blocked (as in the right-hand picture below), the power steering system fluid reservoir should be replaced.



STEERING BOOT DAMAGE

Remove both clips from each boot, stretch and fully rotate each boot and visually check for any holes, cuts or wear in the boots. Damaged boots should be replaced.

STEERING RACK INPUT SHAFT LEAK CHECK

Visually inspect the area around the steering rack input shaft for signs of leaks.

NOTE:

Misting/Dampness around the input shaft seal can be mis-diagnosed as leaks (see top four pictures below). This is normal and suspected leaks should always be verified by cleaning and chalking.



If there is clear evidence of a fluid leak at the steering rack input shaft seal after following the cleaning and chalking techniques described in the pinpoint tests, the steering rack should be replaced.

POWER STEERING FLUID CONDITION CHECK

1. Run the engine for 2 minutes
2. Check the power steering fluid system level
3. Observe the color and the odor. The color under normal circumstances should be red, green or yellow, not brown, black or emulsified with water. The fluid should not have a burnt odor.
4. Using a suitable clean syringe extract a suitable amount of fluid from the reservoir

5. Allow the fluid to drip onto a facial tissue and examine the stain
6. If evidence of solid material is found, the power steering fluid system should be drained for further inspection
7. If fluid contamination or steering component failure is confirmed by the sediment in the power steering fluid system, refer to steering fault diagnosis by symptom charts in this section

POWER STEERING PRESSURE TEST

For details of the correct equipment and procedures for power steering system pressure tests, REFER to: Section 211-02 Power Steering/General Procedures

POWER STEERING

STEERING ANGLE SENSOR

(G1081369)

REMOVAL AND INSTALLATION

57.40.02	SENSOR - STEERING ANGLE/COLUMN - RENEW	ALL DERIVATIVES	2.5	USED WITHINS	+

REMOVAL

WARNINGS:

- Persons working on the supplemental restraint system (SRS) must be fully trained and have been issued with the safety guidelines.
- Allow a period of 10 minutes to elapse after disconnecting the battery before undertaking any work on the SRS.
- The SRS electrical connectors are unique. DO NOT force, or attempt to connect electrical connectors to the wrong sockets.
- The correct procedures must always be used when working on SRS components.
- It is imperative that before any work is undertaken on the SRS system, the appropriate information is read thoroughly.
- Always disconnect both battery cables before beginning work on the SRS system. Disconnect the ground cable first. Never reverse connect the battery.
- Take extra care when handling SRS components.

1. Make the SRS system safe.
   For additional information, refer to: Standard Workshop Practices (100-00, Description and Operation).

2. Disconnect the battery ground cable.
   For additional information, refer to: Specifications (414-00, Specifications).

3. Remove the steering column.
   For additional information, refer to: Steering Column (211-04, Removal and Installation).

4.

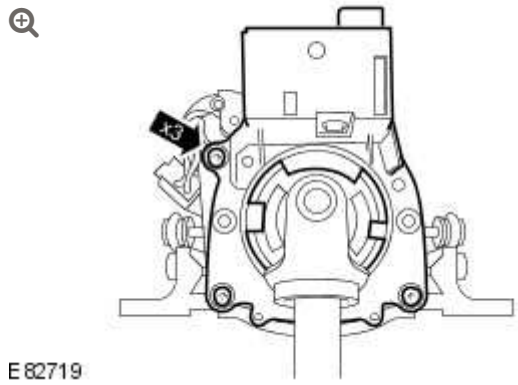

Remove the steering angle sensor.

- Remove the 3 screws.

INSTALLATION

1. Install the steering angle sensor.
   - Tighten the screws to 3 Nm (2 lb.ft).
2. Install the steering column.
   For additional information, refer to: Steering Column (211-04, Removal and Installation).
3. Connect the battery ground cable.
   For additional information, refer to: Specifications (414-00, Specifications).
4. Using the Land Rover approved diagnostic system, calibrate the steering angle sensor.

POWER STEERING

STEERING GEAR – V8 S/C 5.0L PETROL, LHD AWD

(G1234582)

REMOVAL AND INSTALLATION

57.10.01	STEERING GEAR - RENEW	LEFT HAND DRIVE, 5000 CC, AJ V8, SUPERCHARGED	3	USED WITHINS	+

SPECIAL TOOL(S)



205-735 (LRT-54-026)

Remover halfshaft inboard joint



308-626/1

Installer halfshaft oil seal



308-626/2

Installer/Guide halfshaft oil seal



100-012 (LRT-99-004)

Impulse extractor



205-754 (LRT-54-027)

Ball joint separator

REMOVAL

1. **CAUTION:**

   Do not turn the steering wheel with the steering column lower shaft disconnected as damage to the clockspring and steering wheel switches may occur.

   Align the steering wheel to straight ahead.

2. Disconnect the battery ground cable.
   For additional information, refer to: Specifications (414-00, Specifications).

3. Remove the cooling fan.
   For additional information, refer to: Cooling Fan - Vehicles With: Supercharger (303-03, Removal and Installation).

4. **WARNING:**

   Do not work on or under a vehicle supported only by a jack. Always support the vehicle on safety stands.

   Raise and support the vehicle.

5. Drain the differential fluid.
   For additional information, refer to: Differential Draining and Filling (205-03, General Procedures).

6. Remove the front wheels and tires.

7. Remove the engine undershield.
   For additional information, refer to: Engine Undershield (501-02, Removal and Installation).

8. **NOTE:**

   RH side only.

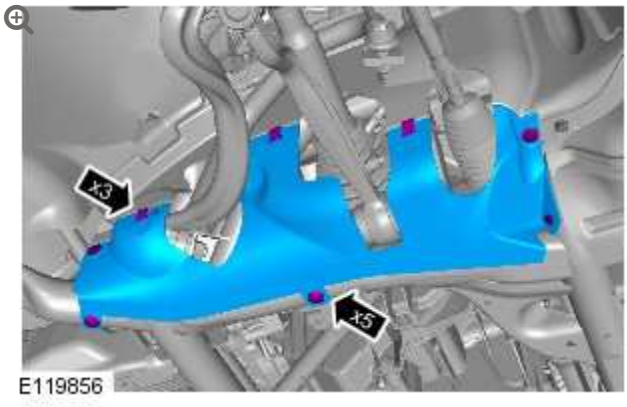

   Remove the fender splash shield lower extension panel.

9. **NOTE:**

   RH side only.

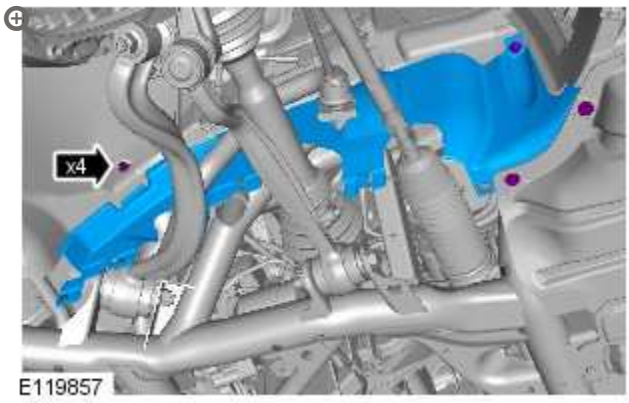

Remove the fender splash shield upper extension panel.

10.

CAUTION:

Make sure the ball joint seal is not damaged. A damaged seal will lead to the premature failure of the joint.

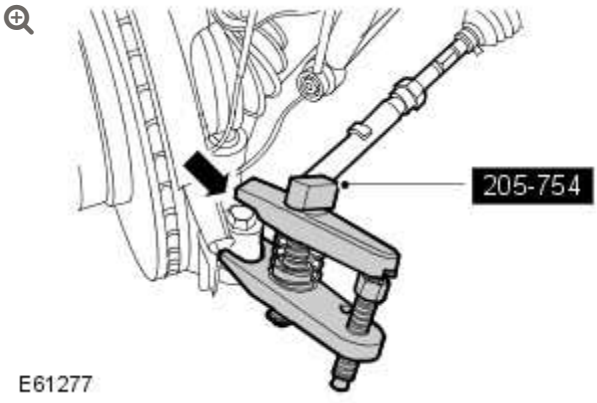

RH front: Disconnect the steering gear tie rod end ball joint.

- Use the special tool.
- Loosen the tie-rod end ball joint retaining nut.
- Discard the nut.

11.

CAUTION:

Note the fitted position of the special washer.

NOTE:

Use an additional wrench to prevent the ball joint rotating.

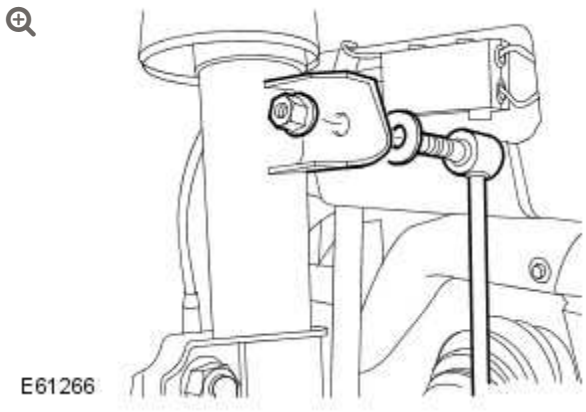

RH front: Disconnect the stabilizer bar link.

- Remove the nut.
- Remove the flat washer.

12.

WARNING:

Do not remove the nuts.

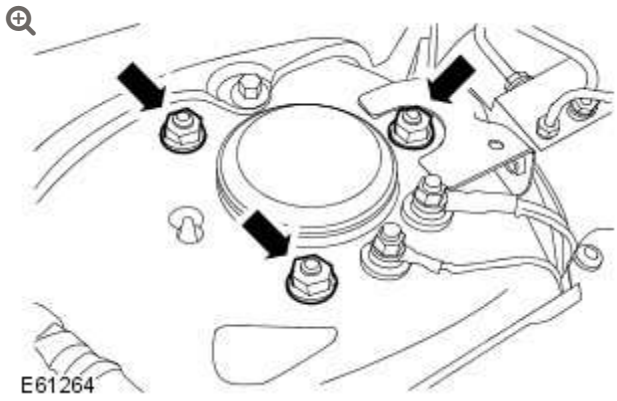

LH front: Release the air suspension spring.

- Loosen the 3 nuts.

13.

NOTE:

Use an additional wrench to prevent the ball joint rotating.

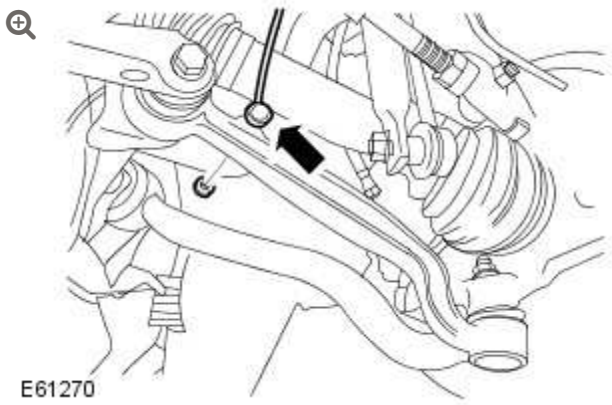

LH front: Disconnect the suspension height sensor link arm.

- Remove the nut.

14.

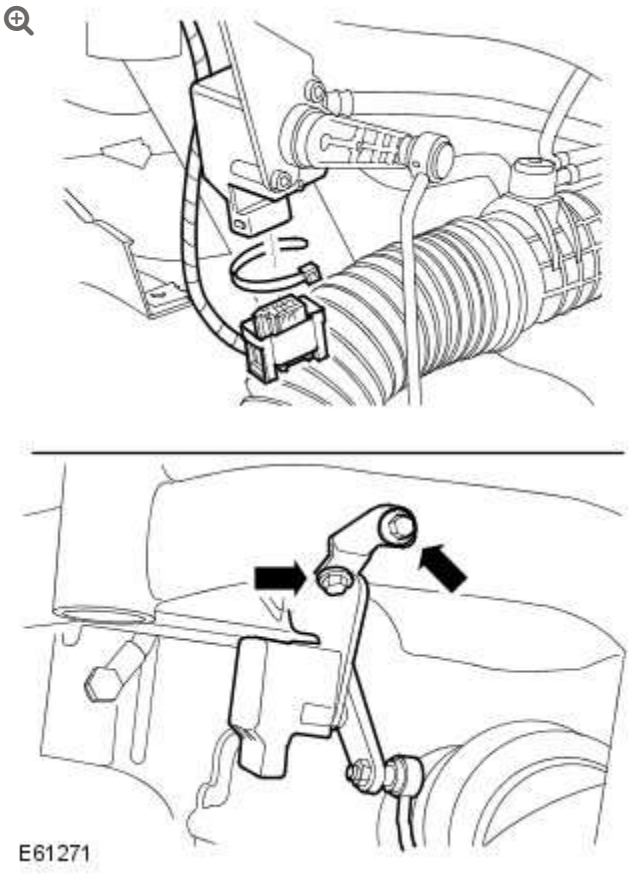

LH front: Remove the suspension height sensor.

- Remove the clip.
- Disconnect the electrical connector.
- Remove the 2 bolts.

15.

CAUTION:

Make sure the ball joint seal is not damaged. A damaged seal will lead to the premature failure of the joint.

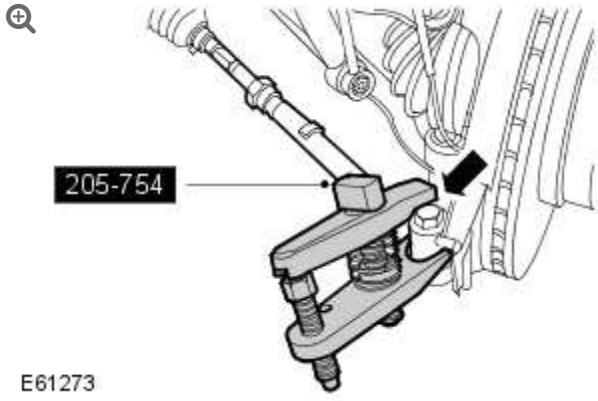

LH front: Disconnect the steering gear tie rod end ball joint.

- Use the special tool.
- Loosen the tie-rod end ball joint retaining nut.
- Discard the nut.

16.

CAUTION:

Note the fitted position of the special washer.

NOTE:

Use an additional wrench to prevent the ball joint rotating.

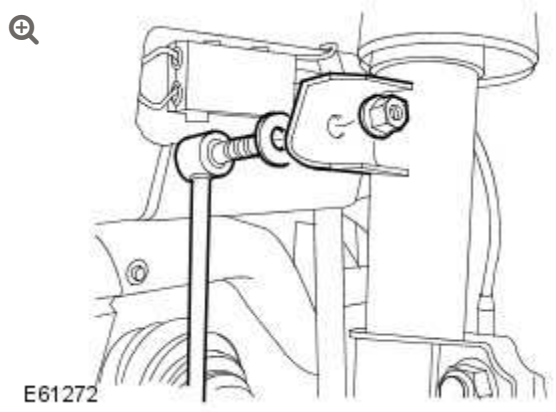

LH front: Disconnect the stabilizer bar link.

- Remove the nut.
- Remove the flat washer.

17.

CAUTION:

Support the lower arm.

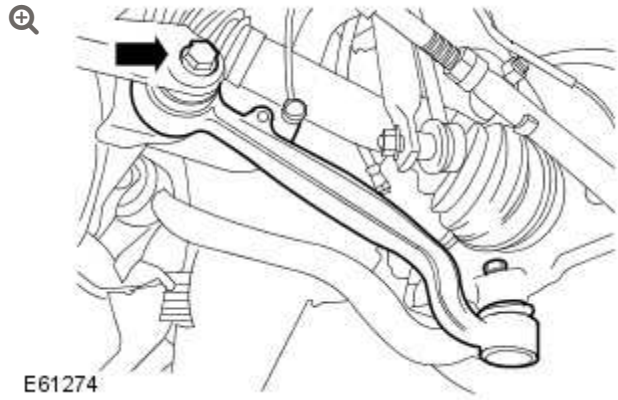

LH front: Disconnect the lower arm.

- Remove the bolt and discard the nut.

18.

CAUTION:

Support the tie rod.

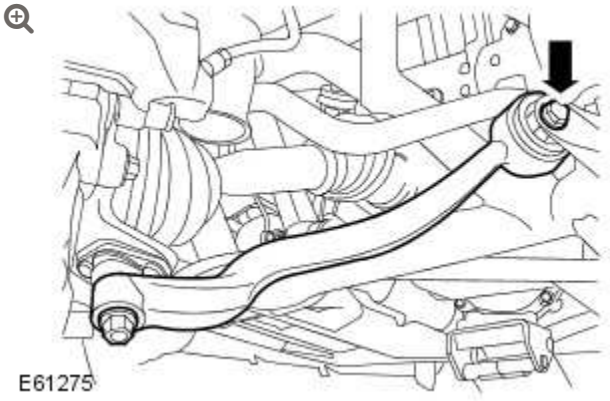

LH front: Disconnect the tie rod.

- Remove the bolt and discard the nut.

19.

CAUTION:

Support the halfshaft.

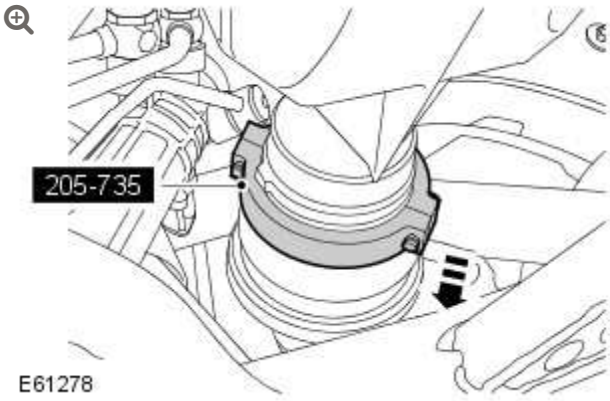

LH front: Using the special tool, disconnect the halfshaft from the differential.

- Remove and discard the retaining clip.

20. LH front: Remove and discard the halfshaft oil seal.

21. **CAUTION:**

> Do not turn the steering wheel with the steering column lower shaft disconnected as damage to the clockspring and steering wheel switches may occur.

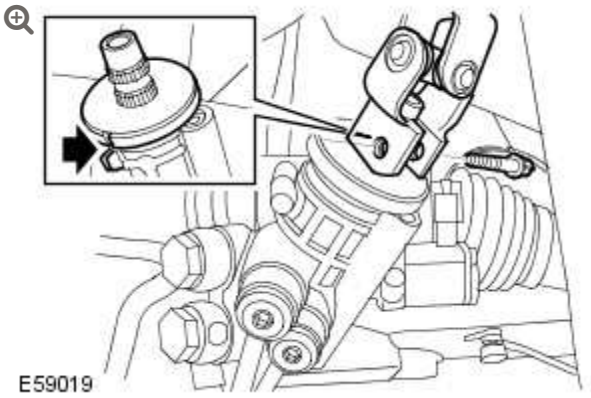

Disconnect the lower steering column from the steering gear.

- Note the fitted position.
- Align the steering wheel to straight ahead.
- Remove and discard the Torx bolt.

22.



Disconnect the steering gear electrical connector.

23.

WARNING:

Fluid loss is unavoidable, use absorbent cloth or a container to collect the fluid.

CAUTION:

Before disconnecting or removing the components, make sure the area around the joint faces and connections are clean. Plug open connections to prevent contamination.

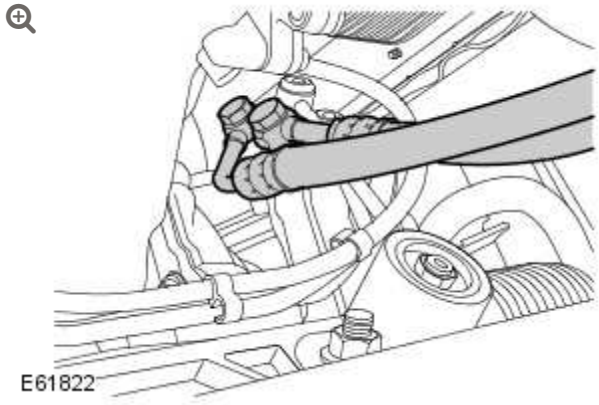

Disconnect the power steering feed and return fluid lines from the steering gear.

- Note the fitted position.
- Remove the 2 unions.
- Remove and discard the 4 sealing washers.

24.

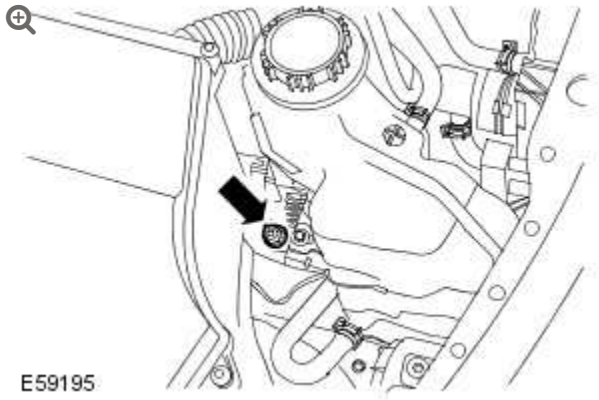

Release the RH engine mount.

- Support the engine.
- Remove the nut.

25.

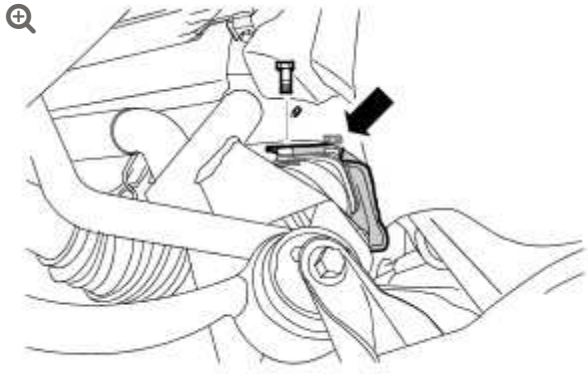

Remove the LH engine mount heat shield.

- Remove the 2 screws.

26.



Release the LH engine mount.

- Remove the bolt.

27.



Release the steering gear.

- Remove and discard the 2 nuts and Torx bolts.

28.

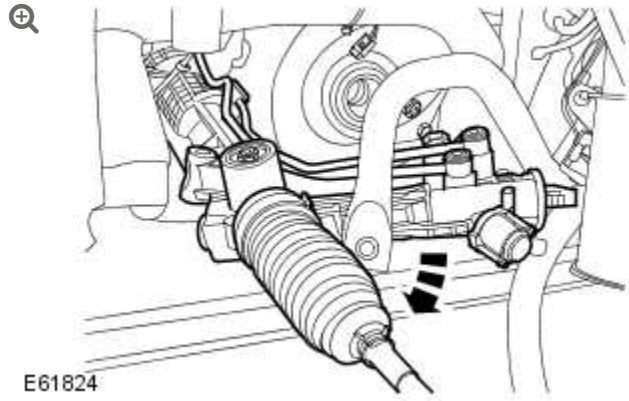

Remove the steering gear.

- Raise the engine.
- With assistance, carefully rotate and release the steering gear.

29.

NOTE:

Do not disassemble further if the component is removed for access only.

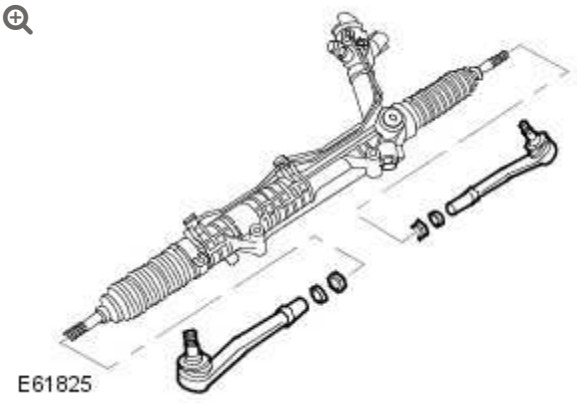

Remove the tie-rod end.

- Note the fitted position.

- Loosen the locknut.
- Remove and discard the locking ring.
- Remove and discard the locknut.
- Repeat the above procedure for the other side.

INSTALLATION

1. **CAUTION:**

   Make sure the locking ring taper faces the tie rod end.

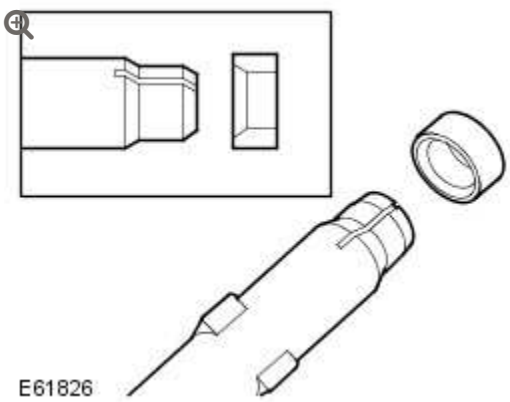

Install the tie-rod end.

- Clean the components.
- Install a new locknut.
- Install a new locking ring.
- Tighten the new nut to 80 Nm (59 lb.ft).

2. Install the steering gear.
   - With assistance, carefully rotate and align the steering gear.

- Tighten the new nuts and Torx bolts to 100 Nm (74 lb.ft).

3. Lower the engine onto its mounts.
   - Tighten the nut and bolt to 115 Nm (85 lb.ft).

4. Install the LH engine mount heat shield.
   - Tighten the screws.

5. Connect the power steering feed and return fluid lines.
   - Clean the components.
   - Install new sealing washers.
   - Tighten the M16 union to 28 Nm (21 lb.ft).
   - Tighten the M14 union to 28 Nm (21 lb.ft).

6. Connect the steering gear electrical connector.

7. 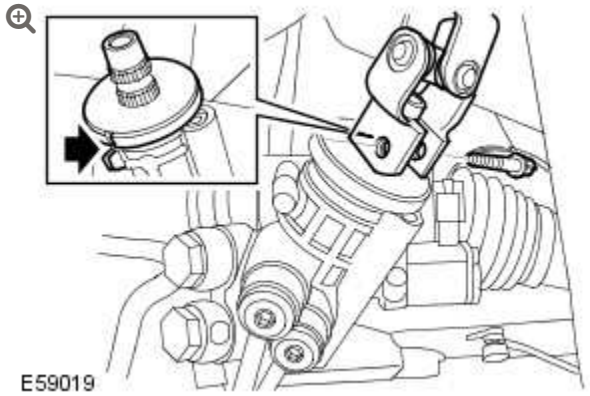

   Attach the lower steering column.
   - Make sure that the steering gear tag is aligned correctly, as shown.
   - Install a new Torx bolt and tighten to 24 Nm (18 lb.ft).

8.

CAUTION:

The seal protector must be left in place until the halfshaft has been installed.

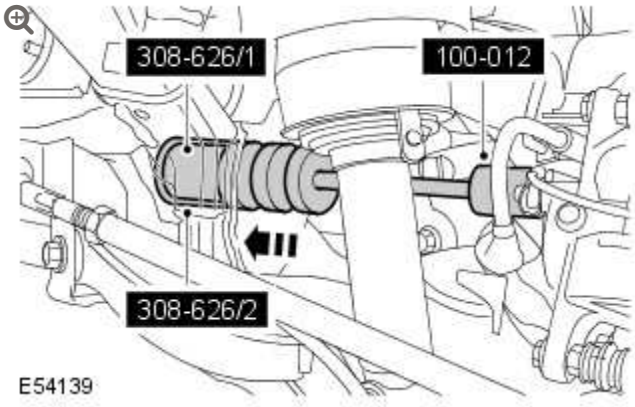

LH front: Using the special tools, install a new halfshaft oil seal.

- Clean the component mating faces.

9.

CAUTIONS:

- Keep the halfshaft horizontal to avoid damaging the oil seal.
- Pull on the halfshaft inboard joint to make sure the clip has fully engaged and retains the halfshaft inboard joint within the differential case.

NOTE:

Do not fully engage the halfshaft until the oil seal protector has been removed.

LH front: Fully install the halfshaft.

- Clean the component.
- Install a new retaining clip.
- Open the halfshaft oil seal protector.
- Lubricate the seal with clean differential fluid.
- Remove and discard the halfshaft oil seal protector.

10. **NOTE:**

Do not fully tighten the locking nut at this stage.

LH front: Connect the tie rod.

- Install the bolt with a new nut.

11. **NOTE:**

Do not fully tighten the locking nut at this stage.

LH front: Connect the lower arm.

- Install the bolt with a new nut.

12. **CAUTION:**

Make sure the ball joint seal is not damaged. A damaged seal will lead to the premature failure of the joint.

LH front: Connect the steering gear tie rod end ball joint.

- Clean the component mating faces.

- Tighten the new nut to 80 Nm (59 lb.ft).

13. **CAUTION:**

> Make sure the hardened steel washer is fitted against the stabalizer bar link.

NOTE:

> Use an additional wrench to prevent the ball joint rotating.

LH front: Connect the stabilizer bar link.

- Install the washer.
- Tighten the nut to 100 Nm (74 lb.ft).

14. LH front: Install the suspension height sensor.
    - Tighten the bolts to 3.5 Nm (2.5 lb.ft).
    - Connect the electrical connector.
    - Install the clip.

15. **NOTE:**

> Use an additional wrench to prevent the ball joint rotating.

LH front: Connect the suspension height sensor link arm.

- Tighten the nut to 8 Nm (6 lb.ft).

16.

CAUTION:

Make sure the hardened steel washer is fitted against the stabalizer bar link.

NOTE:

Use an additional wrench to prevent the ball joint rotating.

RH front: Connect the stabilizer bar link.

- Install the washer.
- Tighten the nut to 100 Nm (74 lb.ft).

17.

CAUTION:

Make sure the ball joint seal is not damaged. A damaged seal will lead to the premature failure of the joint.

RH front: Connect the steering gear tie rod end ball joint.

- Clean the component mating faces.
- Tighten the new nut to 80 Nm (59 lb.ft).

18. Install the front wheels and tires.

- Tighten the wheel nuts to 140 Nm (103 lb.ft).

19.

CAUTION:

Nuts and bolts must be tightened with the weight of the vehicle on the suspension.

Tighten the lower arm nuts and bolts to 165 Nm (122 lb.ft) plus a further 90 degrees.

20. **CAUTION:**

Nuts and bolts must be tightened with the weight of the vehicle on the suspension.

Tighten the tie rod nuts and bolts to 165 Nm (122 lb.ft) plus a further 90 degrees.

21. Secure the air suspension spring.
    - Tighten the nuts securing the air springs to 56 Nm (41 lb.ft).

22. Fill the front differential case with the correct amount of fluid.
    For additional information, refer to: Differential Draining and Filling (205-03, General Procedures).

23. **NOTE:**

RH side only.

Install the fender splash shield upper extension panel.

- Tighten the bolts to 8 Nm (6 lb.ft).

24. **NOTE:**

RH side only.

Install the fender splash shield lower extension panel.

25. Install the engine undershield.
For additional information, refer to: Engine Undershield (501-02, Removal and Installation).

26. Install the cooling fan.
For additional information, refer to: Cooling Fan - Vehicles With: Supercharger (303-03, Removal and Installation).

27. Connect the battery ground cable.
For additional information, refer to: Specifications (414-00, Specifications).

28. Fill and bleed the power steering system.
For additional information, refer to: Power Steering System Filling and Bleeding (211-00, General Procedures).

29. Carry out a complete vehicle geometry check and adjustment.

2012.0 RANGE ROVER (LM), 211-03

STEERING LINKAGE

SPECIFICATIONS

Torque Specifications

DESCRIPTION	NM	LB-FT
Tie-rod	110	81
* Tie-rod end ball joint nut	70	52
* Tie-rod end locking nut	55	40
Road wheel nuts	140	103

*** New nut must be installed**

STEERING LINKAGE

STEERING GEAR BOOT

(G297930)

REMOVAL AND INSTALLATION

57.10.29	BOOT - EACH - RENEW	ALL DERIVATIVES	0.4	USED WITHINS	+

REMOVAL

1. Remove the tie-rod end.
   For additional information, refer to: Tie-Rod End (211-03, Removal and Installation).

2. **NOTE:**

   Note the fitted position.

   Remove the locknut.

3.

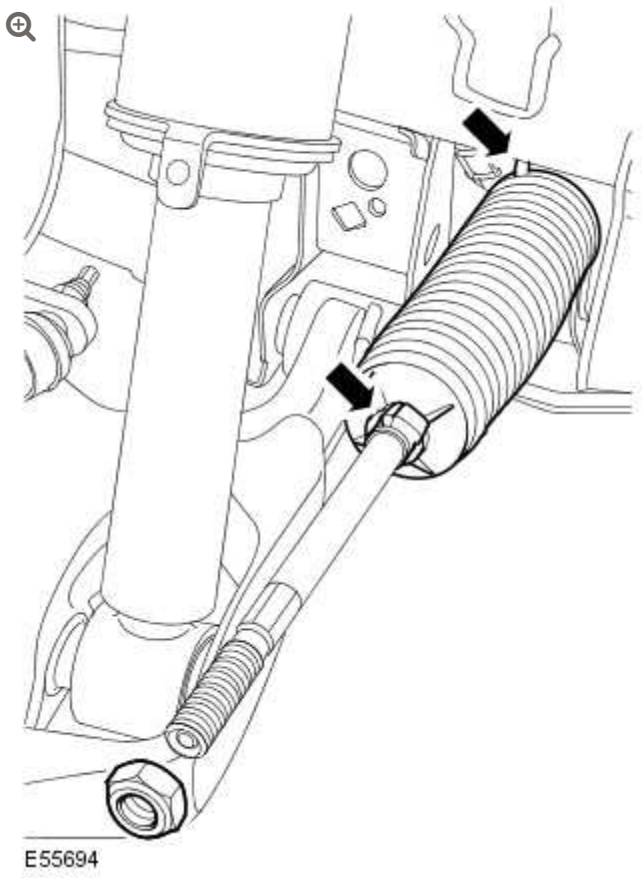

Remove the steering gear boot.

- Release the 2 clips.

INSTALLATION

1. Install the steering gear boot.
   - Clean the component mating faces.
   - Secure with the clips.
2. Install the locknut.
3. Install the tie-rod end.
   For additional information, refer to: Tie-Rod End (211-03, Removal and Installation).

STEERING LINKAGE

DIAGNOSIS AND TESTING

PRINCIPLE OF OPERATION

For a detailed description of the steering linkage, refer to the relevant description and operation sections of the workshop manual.

INSPECTION AND VERIFICATION

CAUTION:

Diagnosis by substitution from a donor vehicle is **NOT** acceptable. Substitution of control modules does not guarantee confirmation of a fault, and may also cause additional faults in the vehicle being tested and/or the donor vehicle

NOTE:

Check DDW for open campaigns. Refer to the corresponding bulletins and SSMs which may be valid for the specific customer complaint and carry out the recommendations as needed

1. Verify the customer concern

2. Visually inspect for obvious signs of damage and system integrity

Visual Inspection

Mechanical	Electrical
▪ Tire condition/pressure ▪ Fluid level	▪ Fuses

3. If an obvious cause for an observed or reported concern is found, correct the cause (if possible) before proceeding to the next step

4. If the concern is not visually evident, verify the symptom and refer to the symptom chart

SYMPTOM CHARTS

NOTE:

If the module or a component is suspect and the vehicle remains under manufacturer warranty, refer to the Warranty Policy and Procedures manual, or determine if any prior approval programme is in operation, prior to the installation of a new module/component

STEERING LINKAGE ISSUES

SYMPTOM	POSSIBLE CAUSES	ACTION
▪ Excessive free play at steering wheel (refer	▪ Steering wheel fixings insecure	▪ Check and tighten the steering wheel retaining bolt as required (REFER to: Section 211-00 Steering

SYMPTOM	POSSIBLE CAUSES	ACTION
to the steering linkage inspection and backlash (free play) check in this section)		System - General Information/Specification)
	▪ Excess play in the steering linkage	▪ Refer to the Heavy Steering/Steering Requires Uneven Effort – Steering System Free Play Checks pinpoint tests below, GO to Pinpoint Test **A.**
	▪ Steering gear not correctly adjusted (causing excessive backlash)	**CAUTION:** DO NOT attempt to adjust the steering gear yoke. Failure to follow this instruction will invalidate the steering gear warranty ▪ Refer to the Heavy Steering/Steering Requires Uneven Effort – Steering System Free Play Checks pinpoint tests below, GO to Pinpoint Test **A.**
	▪ Lower steering column universal joint pinch bolts loose	▪ Check and tighten the lower steering column pinch bolts as required (REFER to: Section 211-00 Steering System - General Information/Specification)
	▪ Excessive wear in steering column universal joints	▪ REFER to: Pinpoint Tests within Section 211-04 Steering Column/Diagnosis and Testing/Steering Column
	▪ Steering gear mounting bolts loose or damaged	▪ Check/tighten and install new steering gear mounting bolts as required (REFER to: Section 211-00

SYMPTOM	POSSIBLE CAUSES	ACTION
		Steering System - General Information/Specification)
	▪ Wear in steering gear tie-rod end ball joints	▪ Refer to the Heavy Steering/Steering Requires Uneven Effort – Steering System Free Play Checks pinpoint tests below, GO to Pinpoint Test **A.**
	NOTE: Inner ball joint wear is rare. The steering gear installed to all vehicles has a spring loaded pinion to ensure the correct level of engagement between the rack and pinion. This play is optimized with the steering gear in the central position and should not be confused with inner ball joint wear. Check for vertical motion in the inner ball joint with the steering gear in the central position. ▪ Wear in steering gear inner ball joints	
	▪ Wear in suspension ball joints/bushings	▪ Check and install new components as required
▪ Vehicle wanders from side to side when driven straight ahead and the steering	▪ Incorrect tire pressure or tire size	▪ Check and adjust the tire pressures as required (REFER to: Section 204-04 Wheels and Tires/Specification) ▪ Check and install a new tire as required

SYMPTOM	POSSIBLE CAUSES	ACTION
wheel is held in a firm position	▪ Vehicle is unevenly or excessively loaded	▪ Notify the customer of incorrect vehicle loading
	▪ Incorrect toe adjustment	▪ Check and adjust as required (REFER to: Section 204-00 Suspension System - General Information/General Procedures)
	▪ Loose or worn steering gear tie-rod end(s)	▪ Refer to the Heavy Steering/Steering Requires Uneven Effort – Steering System Free Play Checks pinpoint tests below, GO to Pinpoint Test **A.**
	▪ Loose or worn suspension ball joint(s)	▪ Check/tighten and install a new suspension ball joint assembly as required (REFER to: Section 204-01 Front Suspension/Specification)
	▪ Steering column universal joint pinch bolt loose	▪ Check/tighten the steering column universal joint pinch bolt to the correct torque (REFER to: Section 211-02 Power Steering/Specification)
	▪ Loose or worn rear suspension components	▪ Check/tighten and install new rear suspension components as required (REFER to: Section 204-02 Rear Suspension/Specification)
▪ Poor self center action of the steering	▪ Incorrect tire pressure, size or type	▪ Check/adjust the tire pressure and install correct tire as required (REFER to: Section 204-04 Wheels and Tires/Specification)

SYMPTOM	POSSIBLE CAUSES	ACTION
	▪ Incorrect geometry adjustment	**NOTE:** Dealerships must keep a copy of the BEFORE and AFTER geometry figures with job card for future reference ▪ Check and adjust as required (REFER to: Section 204-00 Suspension System - General Information/General Procedures)
	▪ Steering column/steering column lower shaft interference	▪ Check the steering column and steering column lower shaft are free from interference from the engine harness, sound proofing and floor covering
	▪ Steering column shroud fouling on the steering wheel	▪ Correctly install/align as necessary
	▪ Steering column universal joints binding or stiff	▪ REFER to: Pinpoint Tests within Section 211-04 Steering Column/Diagnosis and Testing/Steering Column
	▪ Steering column lower shaft floor seal incorrectly installed, binding or damaged	▪ Correctly install or install new lower shaft as required.
	▪ Binding or damaged steering gear tie-rod(s)	▪ Refer to the Heavy Steering/Steering Requires Uneven Effort – Steering System Free Play Checks

SYMPTOM	POSSIBLE CAUSES	ACTION
		pinpoint tests below, GO to Pinpoint Test **A.**
	▪ Loose, damaged or worn front suspension components	▪ Check/tighten and install new front suspension components as required (REFER to: Section 204-01 Front Suspension/Specification)

DIAGNOSTIC PROCEDURES FOR STEERING LINKAGE

PINPOINT TEST A : HEAVY STEERING/STEERING REQUIRES UNEVEN EFFORT – STEERING SYSTEM FREE PLAY CHECKS	
TEST CONDITIONS	DETAILS/RESULTS/ACTIONS
	A1: OUTER BALL JOINT CHECKS
	1 Refer to the tie-rod wear checks guidance in this section and check for excess free play in the outer ball joints - Steering Linkage Inspection and Backlash (Free Play) Check
	Is there excess free play in the outer ball joints? **Yes** Replace the outer ball joints as required Check again for heavy steering or steering requiring uneven effort. If fault is rectified, perform final checks for heavy or uneven steering effort, GO to Pinpoint Test **B.** If fault is still evident, **GO to A2**. **No** **GO to A2**.
	A2: INNER BALL JOINT CHECKS
	1 Refer to the tie-rod wear checks guidance in this section and check for excess free play in the inner ball joints - Steering Linkage Inspection and Backlash (Free Play) Check
	Is there excess free play in the inner ball joints? **Yes**

PINPOINT TEST A : HEAVY STEERING/STEERING REQUIRES UNEVEN EFFORT – STEERING SYSTEM FREE PLAY CHECKS	
	Replace the inner ball joints as required Check again for heavy steering or steering requiring uneven effort. If fault is rectified, perform final checks for heavy or uneven steering effort, GO to Pinpoint Test **B.** If fault is still evident, replace the steering rack assembly. When all remedial actions have been completed, perform final checks for heavy or uneven steering effort, GO to Pinpoint Test **B.** **No** Replace the steering rack assembly. When all remedial actions have been completed, perform final checks for heavy or uneven steering effort, GO to Pinpoint Test **B.**

PINPOINT TEST B : HEAVY STEERING/STEERING REQUIRES UNEVEN EFFORT - FINAL CHECKS	
TEST CONDITIONS	DETAILS/RESULTS/ACTIONS
B1: AFTER COMPLETING THE ACTIONS ABOVE, CHECK AGAIN FOR HEAVY STEERING OR STEERING REQUIRING UNEVEN EFFORT USING THE FOLLOWING PROCEDURES	
	1 Start the engine and turn the steering wheel fully (lock to lock) 3 times. Check for heavy or uneven steering effort during this procedure
	2 Test drive the vehicle and check for heavy or uneven steering effort
	3 Check the temperature of the power steering fluid. Once the power steering temperature exceeds 80 degrees Celsius, repeat steps 1 and 2 above
	Is there still evidence of heavy or uneven steering effort? **Yes** Repeat the diagnostic steps above, or check other vehicle systems for the source of the problem **No** No further action

COMPONENT TESTS

TIE ROD CHECKS 1: CHECK FOR BENDING OR DEFLECTION OF TIE-ROD SHAFTS

Visually inspect the ends of the tie-rod shafts

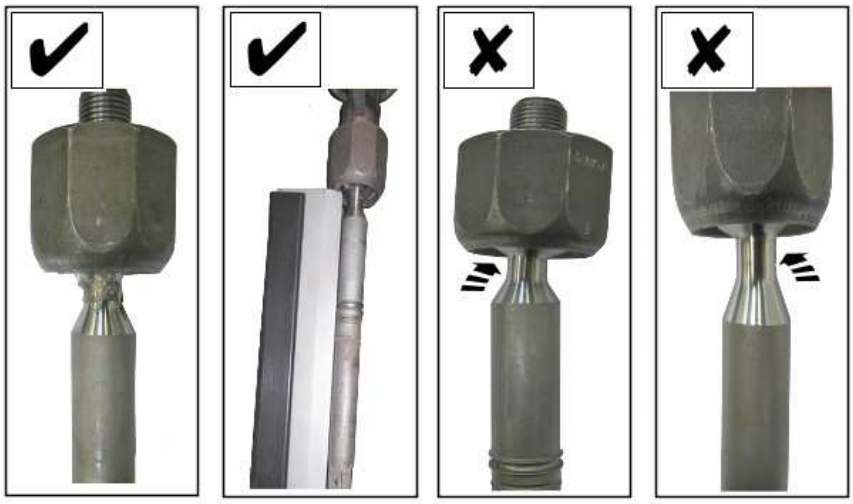

E169044

The tie-rod shafts should show no signs of bending or deflection anywhere along the length of the entire shaft (as in the two left-hand pictures above).

If there is evidence of bending or deflection anywhere along the length of the entire shaft the tie-rod should be replaced (the two right-hand pictures above show examples of shafts bent in the ball-joint area). If evidence of bending or deflection is noted, then the steering gear should be checked thoroughly for other symptoms that may have been induced by the impact (e.g.: Noisy or heavy steering). If further damage is noted, it may be necessary to replace the steering gear as part of the accident damage/abuse repair

TIE ROD CHECKS 2: CHECK TIE-ROD BALL-JOINT SURFACES AND SEATING MATERIAL

Visually inspect the tie-rod ball-joint surfaces and seating material



The tie-rod seating material surrounding the ball-joints should show no signs of damage. The spaces between the seating sections should be regular and even (as in the top-left picture above) and the seating material should not be extruded beyond the metal cup surface of the joint. If there is evidence of irregular spacing between the seating sections or seating material extrusion (as in the two centre row pictures above) or if there is other evidence of seating material deformation (as in the bottom-left picture above), the tie-rod should be replaced

The visible surfaces of the ball-joints should be inspected for scarring, scratches or other obvious damage. The visible ball-joint surfaces should be free from any scarring, scratches or other obvious damage (as in the top-right picture above). If there is evidence of seat damage, then the steering gear should be checked thoroughly for other symptoms that may have been induced by the impact (e.g.:

Noisy or heavy steering). If further damage is noted, it may be necessary to replace the steering gear as part of the accident damage/abuse repair

STEERING LINKAGE INSPECTION AND BACKLASH (FREE PLAY) CHECK

CAUTION:

Steering gear boots must be handled carefully to avoid damage. Use new clamps when installing steering gear boots. Inspect the boots for cuts, deterioration, twisting or distortion. Check the steering gear boots to make sure they are tight. Install new boots or clamps as required

NOTE:

The following steps must be carried out with power steering assistance (with the engine running):

1. With the wheels in the straight ahead position, gently turn the steering wheel to the left and the right to check for free play
2. Free play should be between 0 and 6 mm (0 and 0.24 in) at the steering wheel rim. If the free play exceeds this limit, either the ball joints are worn, or the lower steering column joints are worn (REFER to: Section 211-04 Steering Column/Diagnosis and Testing/Steering Column/Pinpoint Tests/ Noise Specific Diagnostics (Clonk/Column Knock) / Check For Clonk/Column Knock Noise From Lower Steering Column Shaft), or the backlash of the steering gear is excessive

CAUTION:

DO NOT attempt to adjust the steering gear yoke. Failure to follow this instruction will invalidate the steering gear warranty

3. The backlash of the steering gear cannot be adjusted, install new steering gear if excessive backlash is diagnosed after checking for worn ball joints and lower steering column joints

4. Grasp the steering wheel firmly and attempt to move it laterally, both up and down and to the left and the right (without turning the wheel), to check for column bearing wear

STEERING LINKAGE

TIE ROD END (G926950)

REMOVAL AND INSTALLATION

57.55.07	BALL JOINT - TIE-ROD - EACH - RENEW	ALL DERIVATIVES	0.3	USED WITHINS	+

REMOVAL

1. **WARNING:**

   Do not work on or under a vehicle supported only by a jack. Always support the vehicle on safety stands.

   Raise and support the vehicle.

2. Remove the front wheel and tire.

3. Loosen the tie rod end locking nut.

4.

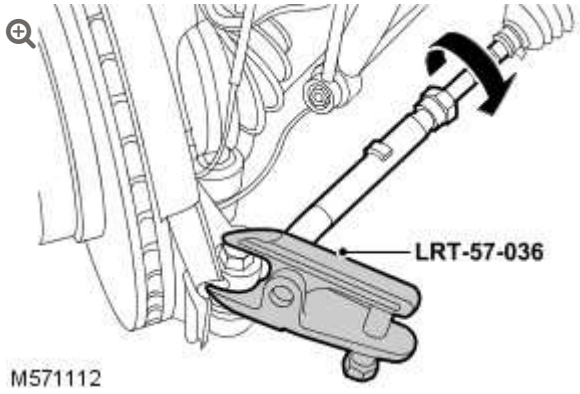

Using the special tool release the tie rod end.

- Remove and discard the nut.

5. **CAUTION:**

> Note the number of turns when removing the tie rod end to aid installation.

Remove the tie rod end.

- Remove and discard the locking ring.

INSTALLATION

1. Install the tie rod end.
   - Install a new locking nut.
2. Secure the tie rod end ball joint.
   - Install new nut.
   - Tighten new nut to 70 Nm (59 lb.ft).
3. Secure the tie rod end locking nut.
   - Tighten nut to 55 Nm (41 lb.ft).

4. Install the front wheel and tire.
   - Tighten the wheel nuts to 140 Nm (103 lb.ft).

5. Check, and if necessary, adjust the wheel alignment.
   For additional information, refer to: Four-Wheel Alignment (204-00 Suspension System - General Information, General Procedures).

STEERING COLUMN

SPECIFICATIONS

Torque Specifications

DESCRIPTION	NM	LB-FT
Steering wheel rotation sensor bolt	3	2
Steering column bolts	25	18
* Steering column upper shaft to steering column lower shaft clamp bolt	24	18
*Steering column lower shaft to steering gear clamp bolt	24	18
Steering column telescopic motor bolts	5	4
Steering column tilt motor bolts	6	4
Steering wheel bolt	63	46

*** New bolts/nut must be installed**

2012.0 RANGE ROVER (LM), 211-04

STEERING COLUMN

DESCRIPTION AND OPERATION

COMPONENT LOCATION

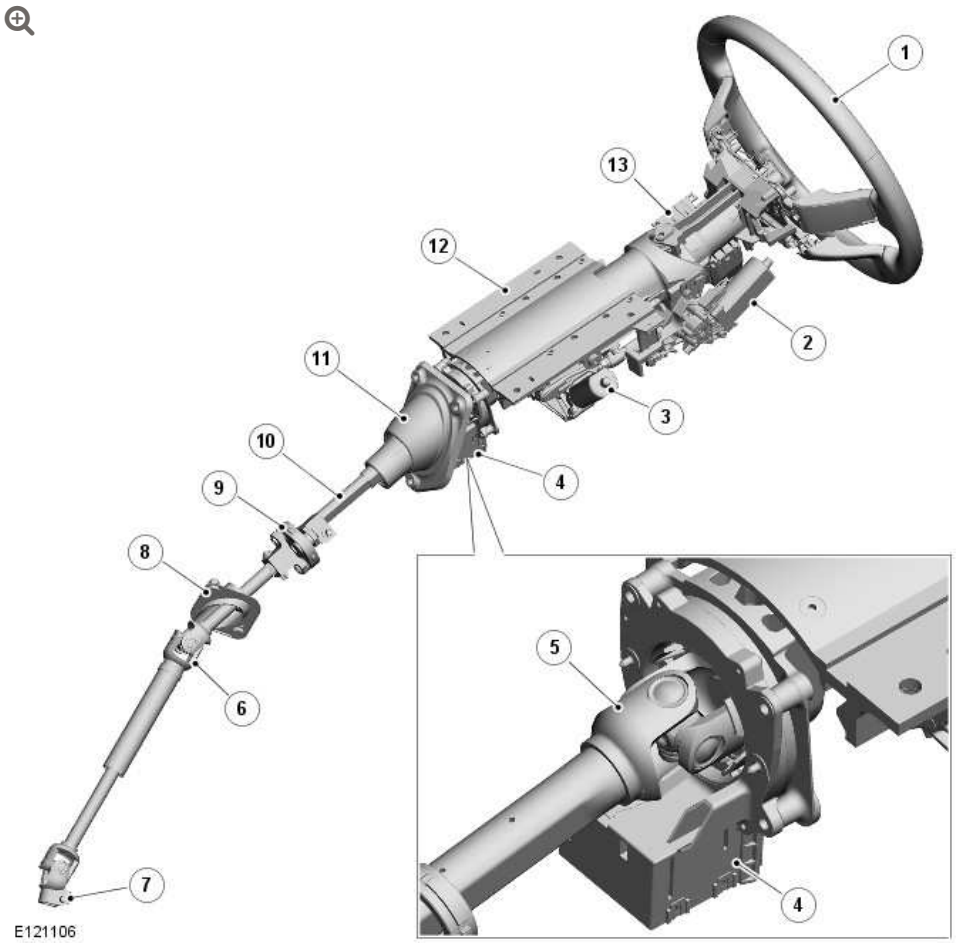

ITEM	DESCRIPTION
1	Steering wheel
2	Column adjustment motor – tilt

ITEM	DESCRIPTION
3	Column adjustment motor – reach
4	Steering angle sensor
5	Upper column - upper shaft
6	Lower column - upper shaft
7	Lower column - lower shaft
8	Bulkhead mounting
9	Flexible coupling
10	Upper column - lower shaft
11	Gaitor
12	Adjustable upper column
13	Lock housing/Tilt head

OVERVIEW

The steering column features fully electrical adjustment for tilt and reach. Steering wheel position is controlled by the CJB (central junction box).

The steering column comprises the upper column assembly, the lower column assembly and the steering wheel. The 3 components are positively connected together to pass driver rotary-input from the steering wheel to a linear output of the steering rack.

The upper column assembly contains electrical adjustment for steering-wheel tilt and reach, the electric steering lock mechanism and the steering angle sensor. Steering adjustment memory positions are stored in the driver's seat module. The column also features a 'tilt away' function which moves the steering column away from the driver allowing easier exit and entry to the vehicle.

Column adjustment is provided by two electric motors; one for tilt and one for reach. Operation of the column adjustment is controlled by a four-way joystick switch located in the column lower shroud. Column adjustment is an integral part of the driver position memory system.

COMPONENT DESCRIPTION

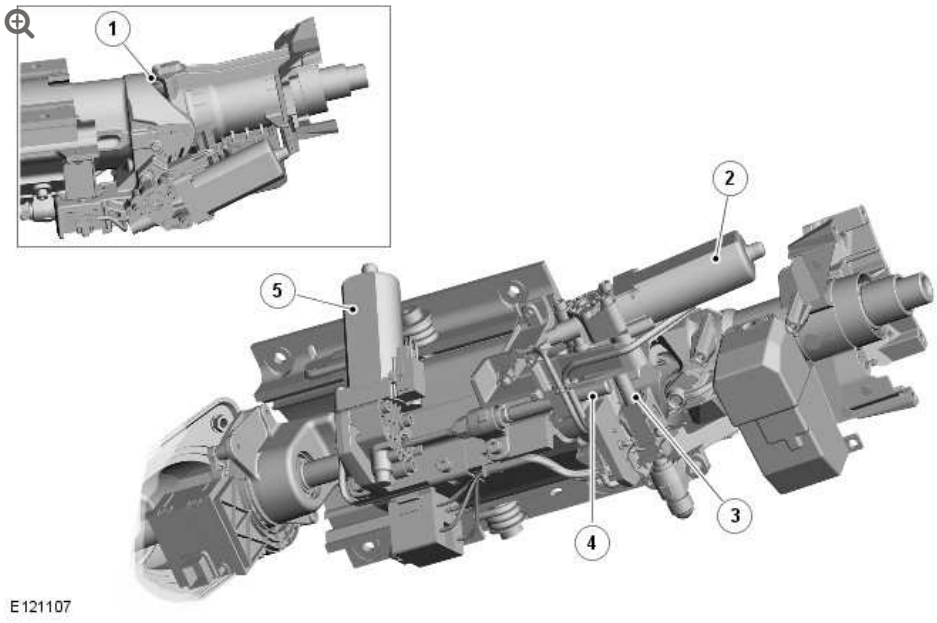

ITEM	DESCRIPTION
1	Vertical adjustment cam
2	Adjustment motor – tilt
3	Drive screw - tilt adjustment motor
4	Drive screw - reach adjustment motor
5	Adjustment motor – reach

WARNING:

Do not attempt to dismantle the steering column. The crash safety of the unit will be compromised.

The lower column comprises upper and lower shafts which are connected together as a sliding fit. The sliding fit allows the shafts to collapse in the event of a frontal collision, preventing column intrusion into the vehicle interior. The upper shaft is connected to a flexible coupling and provides the attachment to the upper column. The lower shaft has internal splines which connect with splines on the steering rack valve input shaft. The upper shaft is fitted with a white coloured sealing ring and a gaitor.

The upper column comprises two shafts which are also connected together as a sliding fit. The shafts are a double 'D' section to prevent rotation. The sliding fit allows the shafts to collapse in the event of a frontal collision further preventing intrusion into the vehicle interior. The lower shaft is connected to the flexible coupling which transfers torque to the lower column and the steering rack. The upper shaft has a splined internal bore which connects with the adjustable upper column assembly.

The upper column assembly comprises two extruded aluminum sections which connect together and can slide on each other in the event of a frontal impact. The column is attached to the cross-car tube with four bolts. Two straps are bolted to the upper of the two aluminium sections. The straps are coiled around a bush on the upper section and have a hook which locates on the lower section. In the event of a frontal impact, the straps can unwind, allowing the upper column to collapse in a controlled manner absorbing energy.

The upper column also provides the location for the steering angle sensor which is used by the ABS (anti-lock brake system).

The upper column provides the locations for the column adjustment motors and the steering lock. The steering lock operates via a locking bolt which engages with a locking sleeve located around the column shaft. The locking sleeve has a tolerance ring which is located between the sleeve and the column. The tolerance ring allows the locking sleeve to slip on the upper column shaft if a high torque is

applied to the steering wheel when the lock is engaged. This prevents the locking bolt from being sheared by someone forcibly turning the steering wheel while the steering lock is engaged, yet still effectively locking the steering.

STEERING COLUMN ADJUSTMENT

Both motors are attached to the lock housing/tilt head assembly and move the column via drive screws.

The reach adjustment motor drives a screw shaft which moves the column in and out for reach adjustment. The adjustment is achieved by two extruded aluminium sections which slide on one another. The tilt adjustment motor also drives a screw shaft. This shaft is connected to a cam, which causes the tilt head to pivot, adjusting the column angle.

Inputs from the column adjustment switch are received by the CJB, which interprets the signals from the switch and operates the requested adjustment motor in the required direction.

The motors used on the steering column have Hall effect sensors. These allow the CJB to calculate and adjust the position of the column when the seat memory store function is used and applies this setting to the applicable ignition key.

ELECTRONIC STEERING COLUMN LOCK

With the passive start system, a conventional steering lock mechanism cannot be used. An electronic system was developed which comprises a steering column assembly locking unit with an integrated control module.

The steering lock is operated with the door locks when the vehicle is locked or unlocked. A control module, located inside the steering

column, controls a motor, releasing the steering lock when appropriate.

The upper steering column assembly houses the column lock mechanism and control module. The components are assembled with non-removable pins for security reasons and are therefore non-serviceable. Failure of any steering lock components will require replacement of the upper steering column assembly.

The steering column lock comprises a locking motor and locking bolt. The locking motor drives a cam, which moves the locking bolt into and out of engagement with the locking sleeve on the steering column. The locking motor is fitted with a Hall effect sensor, which informs the control module of the position (locked/unlocked) of the steering lock mechanism.

CONTROL DIAGRAM

Steering Column Adjustment and Lock

NOTE:

A = Hardwired; D = High-speed CAN (controller area network) bus; O = LIN (local interconnect network) bus

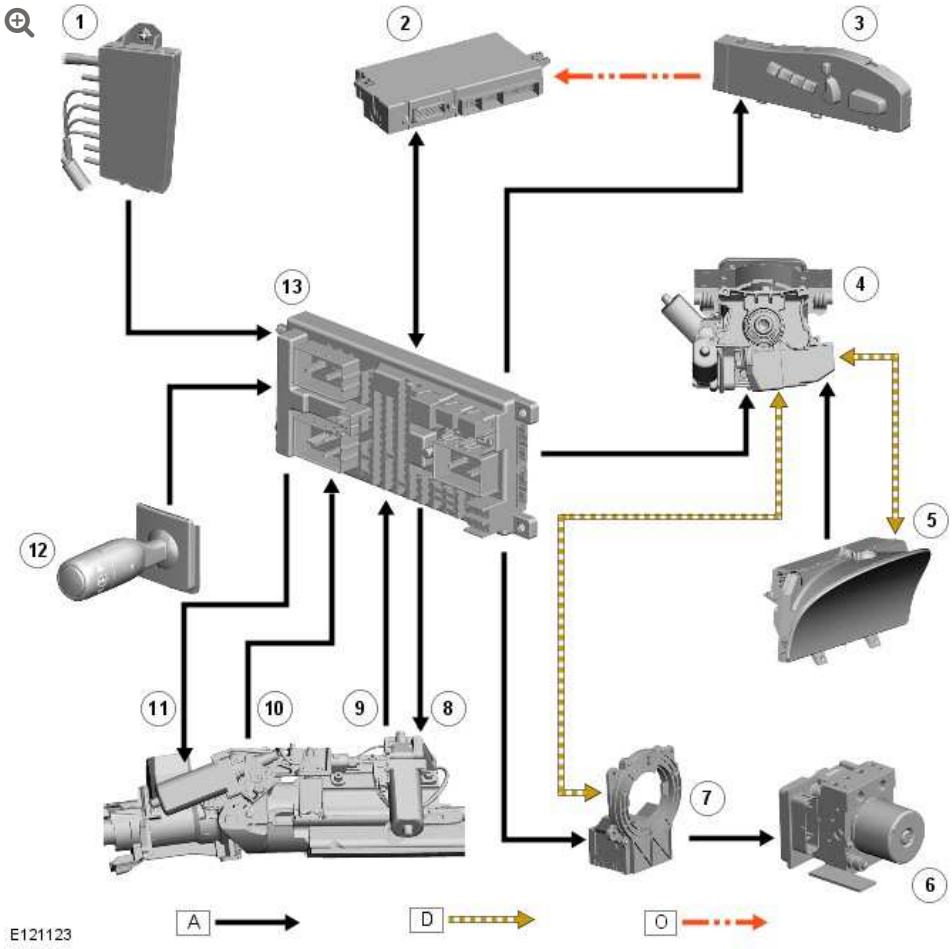

ITEM	DESCRIPTION
1	BJB (battery junction box)
2	Driver seat module (position memory)
3	Driver seat switch pack
4	Electronic steering column lock
5	Instrument cluster
6	ABS module
7	Steering angle sensor
8	Reach adjustment motor
9	Reach adjustment hall sensor
10	Tilt adjustment motor
11	Tilt adjustment hall sensor
12	Steering column switch

ITEM	DESCRIPTION
13	CJB

2012.0 RANGE ROVER (LM), 211-04

STEERING COLUMN

DIAGNOSIS AND TESTING

PRINCIPLE OF OPERATION

For a detailed description of the steering column, refer to the relevant description and operation sections of the workshop manual.

INSPECTION AND VERIFICATION

CAUTION:

Diagnosis by substitution from a donor vehicle is **NOT** acceptable. Substitution of control modules does not guarantee confirmation of a fault, and may also cause additional faults in the vehicle being tested and/or the donor vehicle

1. Verify the customer concern
2. Visually inspect for obvious signs of damage and system integrity

Visual Inspection

Mechanical	Electrical
▪ Tire condition/pressure	▪ Fuses

▪ Fluid level	

3. If an obvious cause for an observed or reported concern is found, correct the cause (if possible) before proceeding to the next step
4. If the concern is not visually evident, verify the symptom and refer to the symptom chart

DTC INDEX

For a list of Diagnostic Trouble Codes (DTCs) that could be logged on this vehicle, please refer to Section 100-00.

For Column Lock DTCs on L319, L320, L322, L359 -

REFER to: Diagnostic Trouble Code (DTC) Index - DTC: Electric Steering Column Lock Control Module (ESCL) (100-00 General Information, Description and Operation

For Additional Column Lock DTCs on L319, L320, L322, L359;

For Column Adjustment Motors or Solenoid DTCs on L319, L320, L322;

REFER to: Diagnostic Trouble Code (DTC) Index - DTC: Central Junction Box (CJB) (100-00 General Information, Description and Operation).

For Additional Column Lock DTCs on L319, L320, L322, L359;

REFER to: Diagnostic Trouble Code (DTC) Index - DTC: Instrument Cluster (IC) (100-00 General Information, Description and Operation)

SYMPTOM CHARTS

NOTE:

If the module or a component is suspect and the vehicle remains under manufacturer warranty, refer to the Warranty Policy and Procedures manual, or determine if any prior approval programme is in operation, prior to the installation of a new module/component

STEERING COLUMN ISSUES

SYMPTOM	POSSIBLE CAUSES	ACTION
▪ Excessive free play at steering wheel (refer to the steering linkage inspection and backlash (free play) check in this section)	▪ Steering wheel fixings insecure	▪ Check and tighten the steering wheel retaining bolt as required (REFER to: Section 211-00 Steering System - General Information/Specification)
	▪ Excess play in the steering linkage	▪ REFER to: Pinpoint Tests within Section 211-03 Steering Linkage/Diagnosis and Testing/Steering Linkage
	▪ Lower steering column universal joint pinch bolts loose	▪ Check and tighten the lower steering column pinch bolts as required (REFER to: Section 211-00 Steering System - General Information/Specification)
	▪ Excessive wear in steering column universal joints	▪ Refer to the Steering Column Noise – Noise Specific Diagnostics (Clonk/Column Knock) pinpoint tests below, GO to Pinpoint Test **A.**
	▪ Steering gear mounting bolts loose or damaged	▪ Check/tighten and install new steering gear mounting bolts as required

SYMPTOM	POSSIBLE CAUSES	ACTION
		(REFER to: Section 211-00 Steering System - General Information/Specification)
	▪ Wear in steering gear tie-rod end ball joints	▪ REFER to: Pinpoint Tests within Section 211-03 Steering Linkage/Diagnosis and Testing/Steering Linkage
	▪ Wear in steering gear inner ball joints	
	▪ Wear in suspension ball joints/bushings	▪ Check and install new components as required
▪ Vehicle wanders from side to side when driven straight ahead and the steering wheel is held in a firm position	▪ Incorrect tire pressure or tire size	▪ Check and adjust the tire pressures as required (REFER to: Section 204-04 Wheels and Tires/Specification) ▪ Check and install a new tire as required
	▪ Vehicle is unevenly or excessively loaded	▪ Notify the customer of incorrect vehicle loading
	▪ Incorrect toe adjustment	▪ Check and adjust as required (REFER to: Section 204-00 Suspension System - General Information/General Procedures)
	▪ Loose or worn steering gear tie-rod end(s)	▪ REFER to: Pinpoint Tests within Section 211-03 Steering Linkage/Diagnosis and Testing/Steering Linkage

SYMPTOM	POSSIBLE CAUSES	ACTION
	▪ Loose or worn suspension ball joint(s)	▪ Check/tighten and install a new suspension ball joint assembly as required (REFER to: Section 204-01 Front Suspension/Specification)
	▪ Steering column universal joint pinch bolt loose	▪ Check/tighten the steering column universal joint pinch bolt to the correct torque (REFER to: Section 211-02 Power Steering/Specification)
	▪ Loose or worn rear suspension components	▪ Check/tighten and install new rear suspension components as required (REFER to: Section 204-02 Rear Suspension/Specification)
▪ Poor self center action of the steering	▪ Incorrect tire pressure, size or type	▪ Check/adjust the tire pressure and install correct tire as required (REFER to: Section 204-04 Wheels and Tires/Specification)
	▪ Incorrect geometry adjustment	**NOTE:** Dealerships must keep a copy of the BEFORE and AFTER geometry figures with job card for future reference ▪ Check and adjust as required (REFER to: Section 204-00 Suspension System - General Information/General Procedures)

SYMPTOM	POSSIBLE CAUSES	ACTION
	▪ Steering column/steering column lower shaft interference	▪ Check the steering column and steering column lower shaft are free from interference from the engine harness, sound proofing and floor covering
	▪ Steering column shroud fouling on the steering wheel	▪ Correctly install/align as necessary
	▪ Steering column universal joints binding or stiff	▪ Refer to the Steering Column Noise – Noise Specific Diagnostics (Clonk/Column Knock) pinpoint tests below, GO to Pinpoint Test **A.**
	▪ Steering column lower shaft floor seal incorrectly installed, binding or damaged	▪ Correctly install or install new lower shaft as required.
	▪ Binding or damaged steering gear tie-rod(s)	▪ REFER to: Pinpoint Tests within Section 211-03 Steering Linkage/Diagnosis and Testing/Steering Linkage
	▪ Loose, damaged or worn front suspension components	▪ Check/tighten and install new front suspension components as required (REFER to: Section 204-01 Front Suspension/Specification)
▪ Column will not adjust ▪ Column will not move to memory position	▪ Electrical/electronic failure	▪ Using the manufacturer approved diagnostic system, check for related DTCs and refer to the relevant DTC index

SYMPTOM	POSSIBLE CAUSES	ACTION
		▪ Check fuses/relays ▪ Check instrument cluster for column movement/memory related DTCs and refer to the relevant DTC index ▪ Check condition of wiring and connectors ▪ Carry out column calibration application using the manufacturer approved diagnostic system. The BAR code information is located in the right hand luggage compartment floor area below the carpet ▪ Check seat control memory module
	▪ Motor locked/jammed	▪ Check to see if mechanism has reached hard end stops ▪ Free mechanism ▪ **CAUTION:** This step only applies to L322 09MY or earlier vehicles Replace motor with appropriate service kit
▪ **CAUTION:** This only applies to L322 09MY or earlier vehicles	▪ Electrical/electronic failure	▪ Turn column adjust switch to AUTO position, check that 'Column Adjust AUTO' text is displayed in the instrument cluster message center ▪ Check steering column movement datalogger

SYMPTOM	POSSIBLE CAUSES	ACTION
Column easy entry/exit does not function		signal using the manufacturer approved diagnostic system ▪ Check fuses/relays ▪ Check instrument cluster for column movement/memory related DTCs and refer to the relevant DTC index ▪ Check condition of wiring and connectors ▪ Carry out column calibration application using the manufacturer approved diagnostic system. The BAR code information is located in the right hand luggage compartment floor area below the carpet ▪ Check seat control memory module for DTCs and refer to DTC index
▪ Electromechanical steering column lock will not operate	▪ Internal lock failure	▪ Refer to the electrical circuit diagrams and test steering column lock circuit ▪ Install a new steering column lock as required
▪ Scrape/grind noise from behind steering wheel while steering	▪ Steering column shroud foul condition or clockspring	▪ Correctly install the steering column shroud to eliminate the foul condition ▪ Install a new clockspring as required
	▪ Foreign objects	▪ Remove foreign objects from between steering column shroud and steering wheel/steering

SYMPTOM	POSSIBLE CAUSES	ACTION
		column rotating components
▪ Click	▪ Clockspring or steering column multifunction switch LH	▪ Correctly install and install new components as required
	▪ Loose universal joint pinch bolt	▪ Install a new universal joint pinch bolt and tighten to correct specification (REFER to: Section 211-00 Steering System - General Information/Specification)
▪ Squeak	▪ Steering column shroud joints	▪ Apply Krytox spray to steering column shroud joints
	▪ Clockspring	▪ Install new clockspring as required
▪ Knock	▪ Loose fixings (universal joint pinch bolt and steering column fixings)	▪ Tighten fixings to correct specification (REFER to: Section 211-00 Steering System - General Information/Specification)
▪ Rattle	▪ Foreign objects	▪ Remove foreign objects from between steering column shroud and steering wheel/steering column rotating components
	▪ Loose fixings	▪ Tighten steering column fixings to correct specification (REFER to: Section 211-00 Steering System - General Information/Specification)

SYMPTOM	POSSIBLE CAUSES	ACTION
▪ Noise while adjusting column	▪ Electric motor/solenoid	**NOTE:** Before carrying out repairs/replacement, assess column adjustment noise levels against other vehicles of the same model ▪ Install new components as required
	▪ Motor spindle/lead screw	▪ Lubricate lead screw

COMPONENT TESTS

STEERING LINKAGE INSPECTION AND BACKLASH (FREE PLAY) CHECK

CAUTION:

Steering gear boots must be handled carefully to avoid damage. Use new clamps when installing steering gear boots. Inspect the boots for cuts, deterioration, twisting or distortion. Check the steering gear boots to make sure they are tight. Install new boots or clamps as required

NOTE:

The following steps must be carried out with assistance:

1. With the wheels in the straight ahead position, gently turn the steering wheel to the left and the right to check for free play

2. Free play should be between 0 and 6 mm (0 and 0.24 in) at the steering wheel rim. If the free play exceeds this limit, either the ball joints are worn (Refer to videos shown on SSM41218 for guidance for the procedure to check for worn Outer Ball Joints or Inner Ball Joints), or the lower steering column joints are worn (REFER to: Section 211-04 Steering Column/Diagnosis and Testing/Steering Column/Pinpoint Tests/ Steering Column Noise - Noise Specific Diagnostics (Clonk/Column Knock) / Check For Clonk/Column Knock Noise From Lower Steering Column Shaft), or the backlash of the steering gear is excessive

CAUTION:

DO NOT attempt to adjust the steering gear yoke. Failure to follow this instruction will invalidate the steering gear warranty

3. The backlash of the steering gear cannot be adjusted, install new steering gear if excessive backlash is diagnosed after checking for worn ball joints and lower steering column joints

4. Grasp the steering wheel firmly and attempt to move it laterally, both up and down and to the left and the right (without turning the wheel), to check for column bearing wear

Specific Steering Column Noise Types

See below for a glossary of terms describing the most common noises that may indicate a fault with the steering column:

Clonk/Column Knock

Clonk/column knock is a structure-borne noise heard as a loose-sounding rattle or vibration coming from the steering column. Clonk/column knock can be identified by driving and turning over cobblestones, rough roads, or high frequency bumps such as 25-50 mm tall tar strips. Clonk requires a tie-rod load impact

PINPOINT TEST A : STEERING COLUMN NOISE - NOISE SPECIFIC DIAGNOSTICS (CLONK/COLUMN KNOCK)	
TEST CONDITIONS	**DETAILS/RESULTS/ACTIONS**
A1: CHECK FOR CLONK/COLUMN KNOCK NOISE FROM LOWER STEERING COLUMN SHAFT	
	1 Disconnect the lower steering column universal joint from the steering rack input shaft
	2 Discard the screw fixings
	3 Rotate the lower steering column shaft between 90 and 180 degrees
	4 Ascertain the specific type of noise present in the power steering system (see glossary of noise terms above)
	5 Rotate lower steering column shaft to its original position. Failure to do this could lead to damage to the clock spring and misalignment of the steering wheel
	Is there a clonk/column knock noise as the lower steering column shaft is rotated? **Yes** Replace the lower steering column universal joint, lower steering column or upper column as appropriate. For removal and installation of Steering Column & Steering Column Flexible Coupling (REFER to: Section 211-04 Steering Column/Removal and Installation/Steering Column; 211-04 Steering Column/Removal and Installation/Steering Column Flexible Coupling)When all remedial actions have been completed, perform final checks for steering system noise, GO to Pinpoint Test **B.** **No** Reconnect steering column using a new screw and REFER to: Section 211-03 Steering Linkage/Diagnosis and Testing/Steering Linkage/Pinpoint Tests/ Heavy Steering/Steering Requires Uneven Effort – Steering System Free Play Checks / Outer Ball Joint Checks / Inner Ball Joint Checks

PINPOINT TEST B : STEERING SYSTEM NOISE - FINAL CHECKS	
TEST CONDITIONS	DETAILS/RESULTS/ACTIONS
B1: AFTER COMPLETING THE ACTIONS ABOVE, CHECK AGAIN FOR POWER STEERING SYSTEM NOISE USING THE FOLLOWING PROCEDURES	
	1 Start the engine and turn the steering wheel fully (lock to lock) 3 times. Check for power steering noise during this procedure
	2 Test drive the vehicle and check for power steering noise
	3 Check the temperature of the power steering fluid. Once the power steering temperature exceeds 80 degrees Celsius, repeat steps 1 and 2 above
	Is there still noise emanating from the steering system? **Yes** Repeat the diagnostic steps above, or check other vehicle systems for the source of the noise **No** No further action

STEERING COLUMN (G1235397)

REMOVAL AND INSTALLATION

57.40.01	COLUMN ASSEMBLY - INNER AND OUTER - RENEW	ALL DERIVATIVES	2.5	USED WITHINS	+

REMOVAL

WARNINGS:

- Persons working on the supplemental restraint system (SRS) must be fully trained and have been issued with the safety guidelines.
- Allow a period of 10 minutes to elapse after disconnecting the battery before undertaking any work on the SRS.
- The SRS electrical connectors are unique. DO NOT force, or attempt to connect electrical connectors to the wrong sockets.
- The correct procedures must always be used when working on SRS components.
- It is imperative that before any work is undertaken on the SRS system, the appropriate information is read thoroughly.
- Always disconnect both battery cables before beginning work on the SRS system. Disconnect the ground cable first. Never reverse connect the battery.
- Take extra care when handling SRS components.

1. Make the air bag supplemental restraint system (SRS) safe.
   Refer to: Standard Workshop Practices (100-00, Description and Operation).

2. Disconnect the battery ground cable.
   Refer to: Specifications (414-00, Specifications).

3. **CAUTION:**

   Make sure the steering is in the straight ahead position.

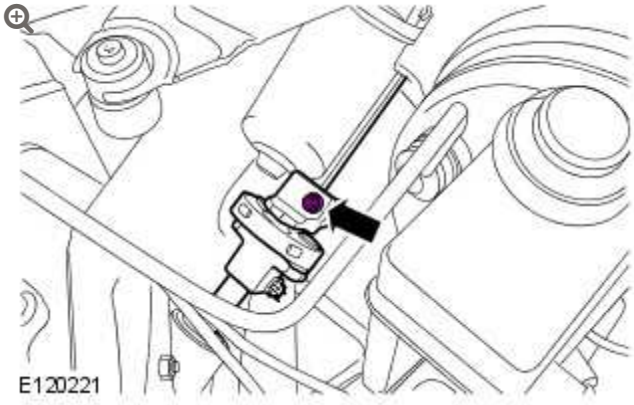

Remove and discard, the steering column flexible coupling clamp bolt.

4. Remove the clockspring housing assembly.
   Refer to: Clockspring (501-20, Removal and Installation).

5. Remove the instrument panel lower section.
   Refer to: Instrument Panel Lower Section (501-12, Removal and Installation).

6. 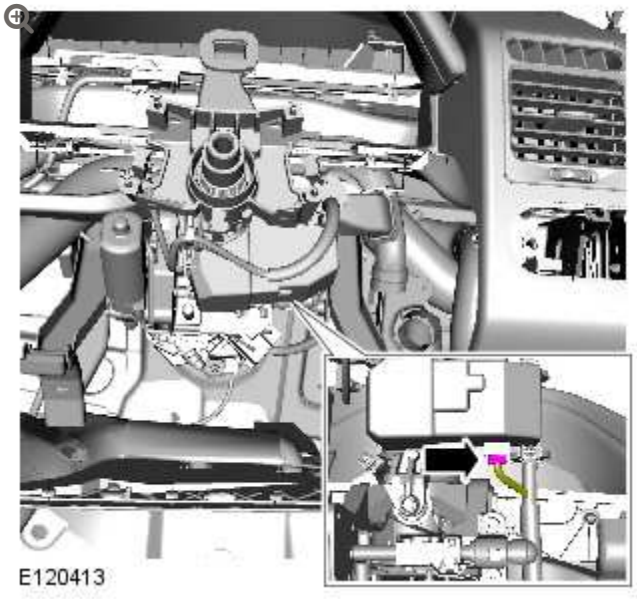

   Disconnect the steering column lock electrical connector.

7.

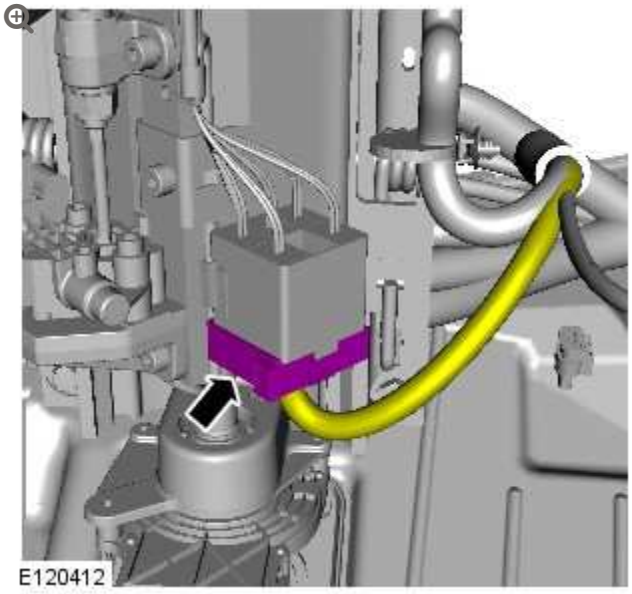

Disconnect the steering column electrical connector.

8.

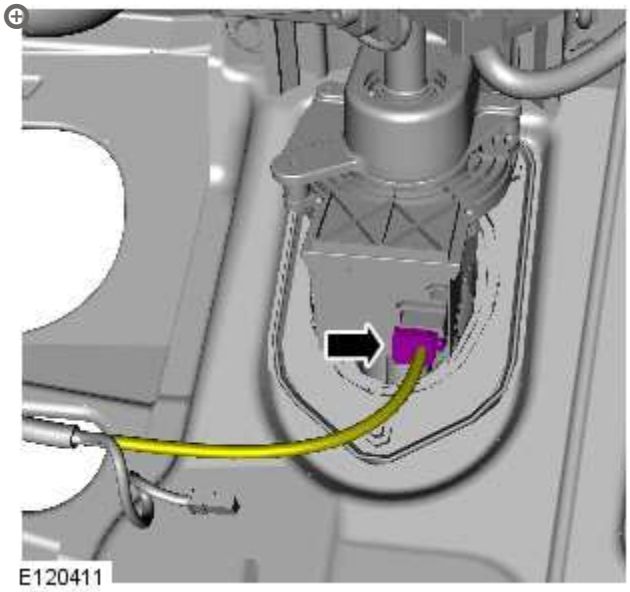

Disconnect the steering wheel rotation sensor electrical connector.

9.

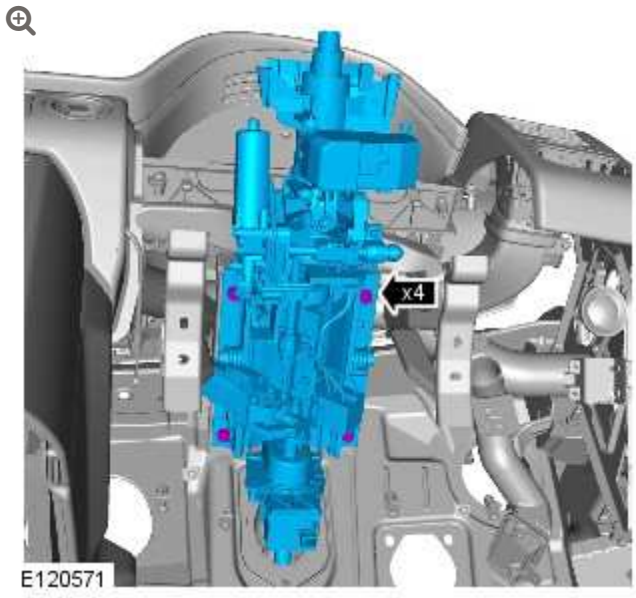

With assistance, remove the steering column.

10. **NOTE:**

Do not disassemble further if the component is removed for access only.

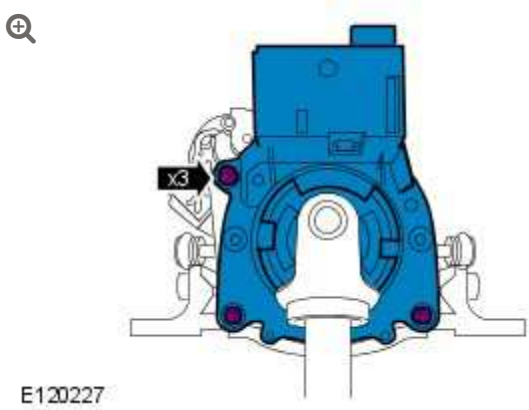

Remove the steering wheel rotation sensor.

INSTALLATION

1. Install the steering wheel rotation sensor.

2. **CAUTION:**

> Make sure the steering is in the straight ahead position.

With assistance, install the steering column.

3. Connect the steering wheel rotation sensor electrical connector.

4. Connect the steering column electrical connector.

5. Connect the steering column lock electrical connector.

6. Install the instrument panel lower section.
Refer to: Instrument Panel Lower Section (501-12, Removal and Installation).

7. Install the clockspring.
Refer to: Clockspring (501-20, Removal and Installation).

8. Install a new steering column flexible coupling clamp bolt.

9. Connect the battery ground cable.
Refer to: Specifications (414-00, Specifications).

10. Initiate the steering angle sensor using the Land Rover approved diagnostic system.

STEERING COLUMN SHAFT (G1235395)

REMOVAL AND INSTALLATION

57.40.22	SHAFT – COLUMN – INTERMEDIATE – RENEW	5000 CC, AJ V8	0.1	USED WITHINS	+

REMOVAL

1.

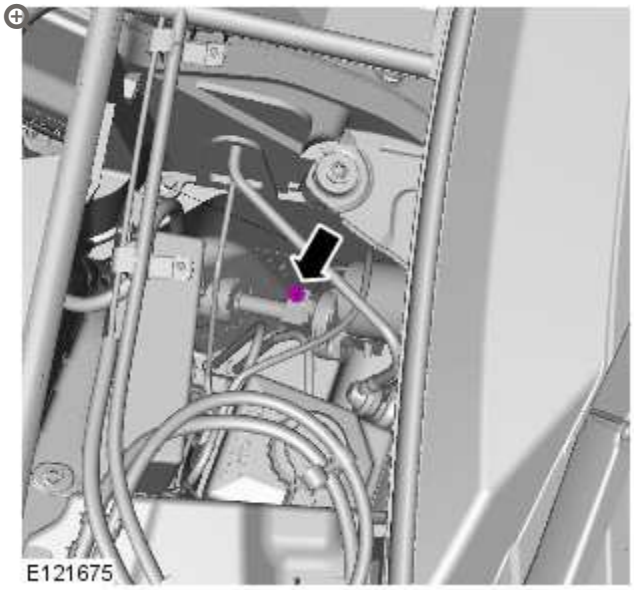

Torque: **24 Nm**

2.

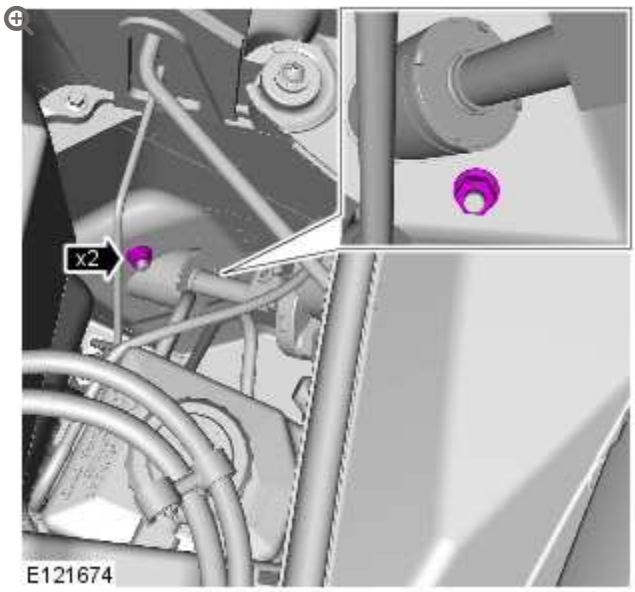

Torque: **21 Nm**

3.

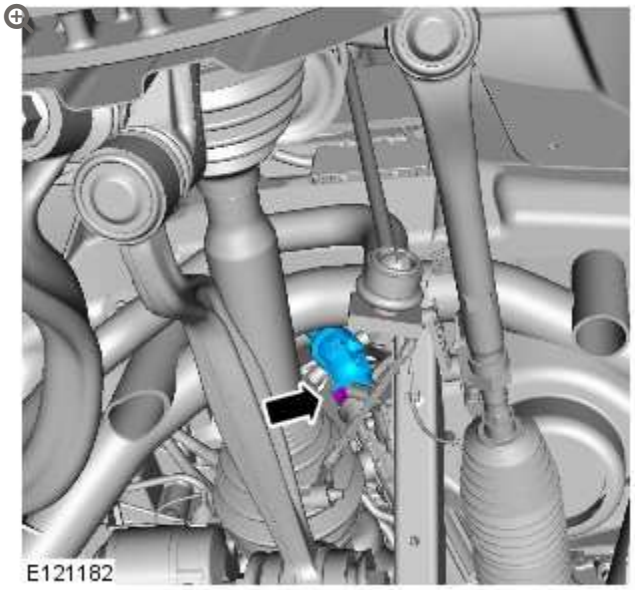

Torque: **24 Nm**

INSTALLATION

1. To install, reverse the removal procedure.

STEERING COLUMN

STEERING WHEEL (G1235399)

REMOVAL AND INSTALLATION

57.61.01	STEERING WHEEL - RENEW	ALL DERIVATIVES	0.4	USED WITHINS	+

REMOVAL

WARNINGS:

- Persons working on the supplemental restraint system (SRS) must be fully trained and have been issued with the safety guidelines.
- Allow a period of 10 minutes to elapse after disconnecting the battery before undertaking any work on the SRS.
- The SRS electrical connectors are unique. DO NOT force, or attempt to connect electrical connectors to the wrong sockets.
- The correct procedures must always be used when working on SRS components.
- It is imperative that before any work is undertaken on the SRS system, the appropriate information is read thoroughly.
- Always disconnect both battery cables before beginning work on the SRS system. Disconnect the ground cable first. Never reverse connect the battery.
- Take extra care when handling SRS components.

NOTE:

Some variation in the illustrations may occur, but the essential information is always correct.

ℹ	All vehicles

1. Make the air bag supplemental restraint system (SRS) safe. Refer to: Standard Workshop Practices (100-00, Description and Operation).

2. Disconnect the battery ground cable.
   Refer to: Specifications (414-00, Specifications).

3. Remove the driver air bag module.
   Refer to: Driver Air Bag Module (501-20, Removal and Installation).

4. **CAUTION:**

   Make sure that the wheels and tires are in the straight-ahead position. Failure to follow this instruction may result in damage to the components.

   NOTE:

   Note the steering wheel to steering column alignment marks.

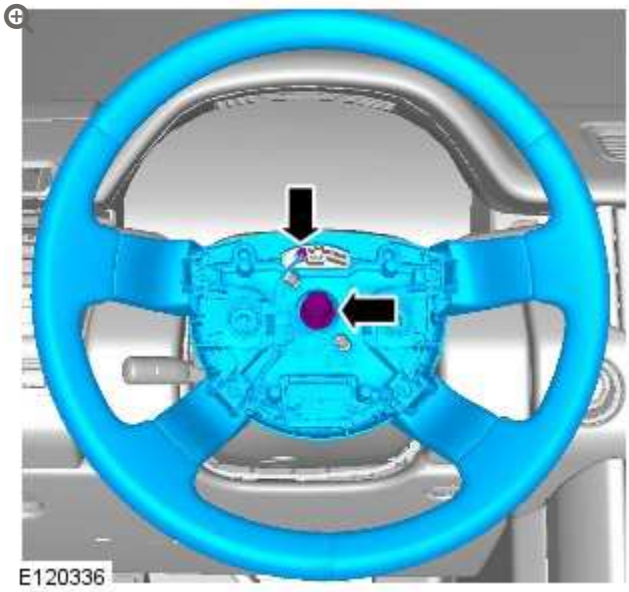

	Vehicles with 4.4L diesel engine

5.

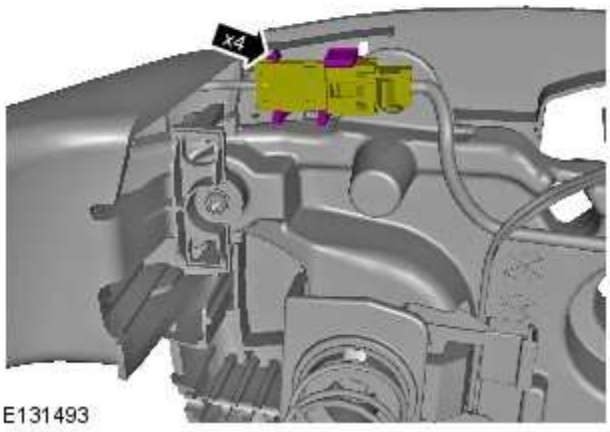

6.

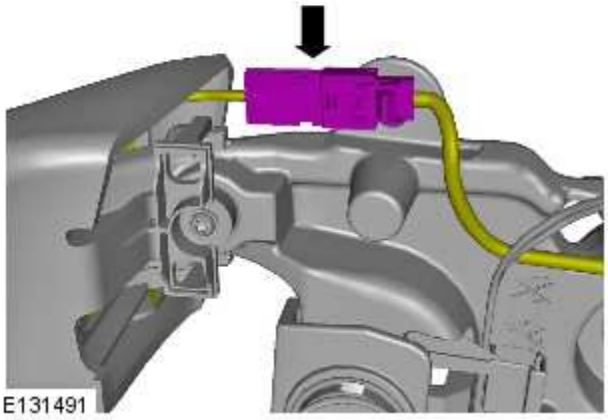

All vehicles

7.

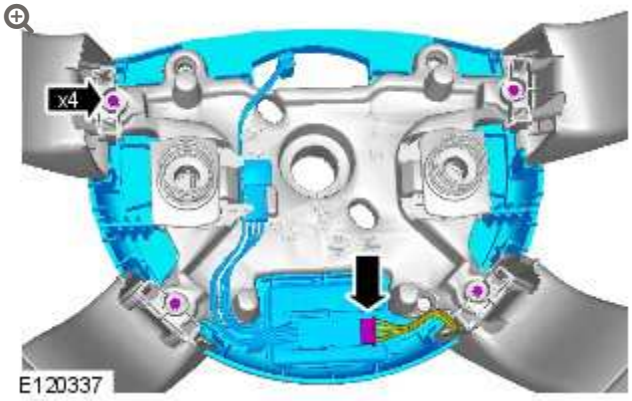

8.

CAUTION:

Make sure the wiring harness and electrical connectors are not damaged during this operation.

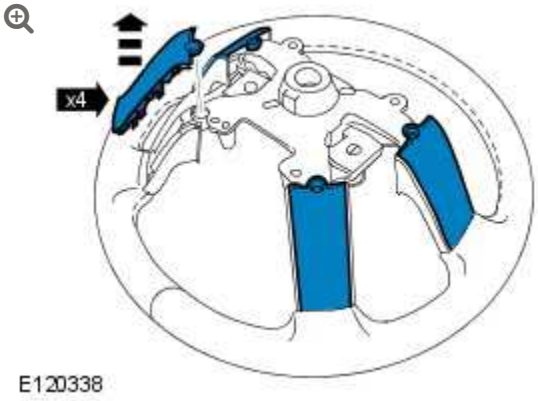

9.

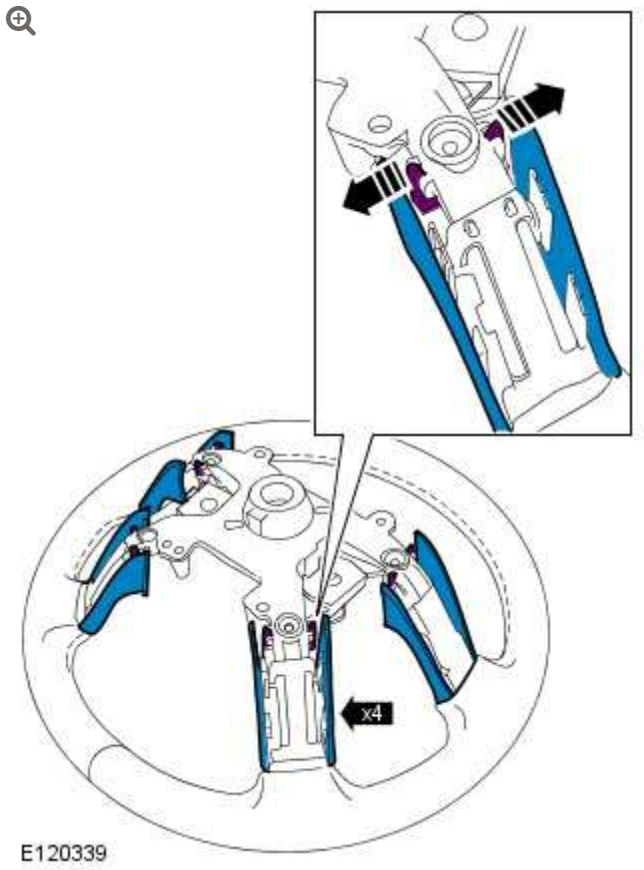

10.

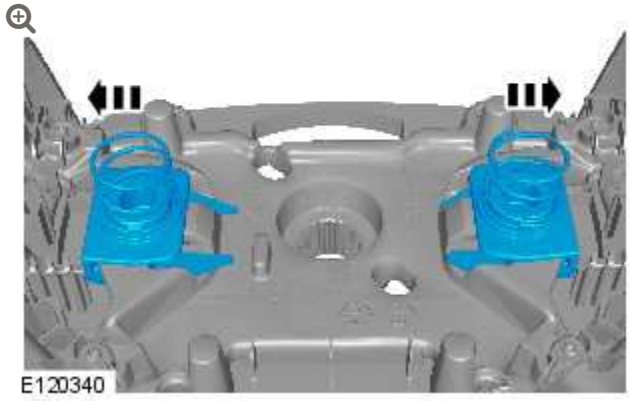

INSTALLATION

All vehicles

1.

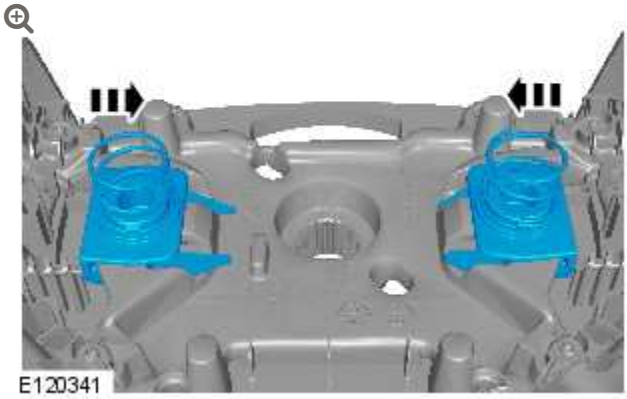

2.

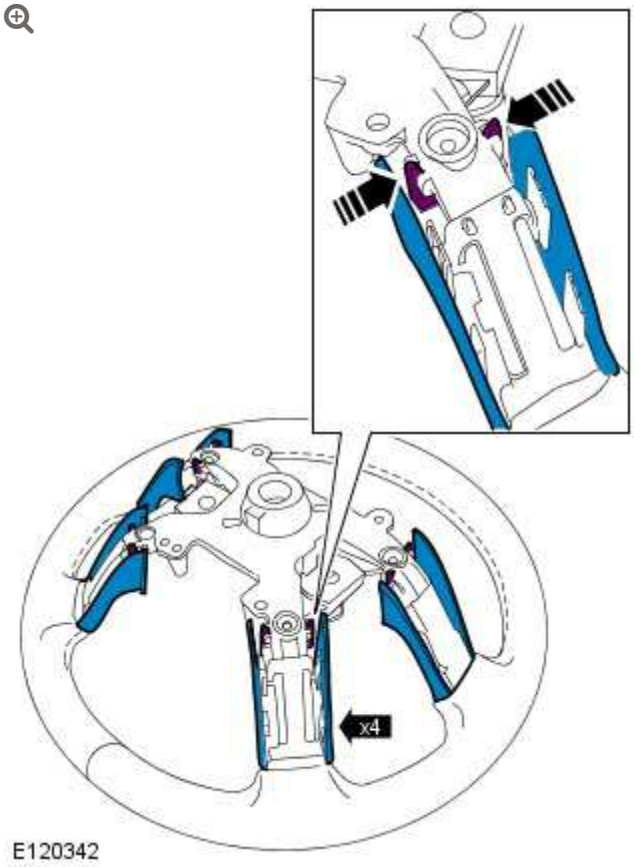

3.

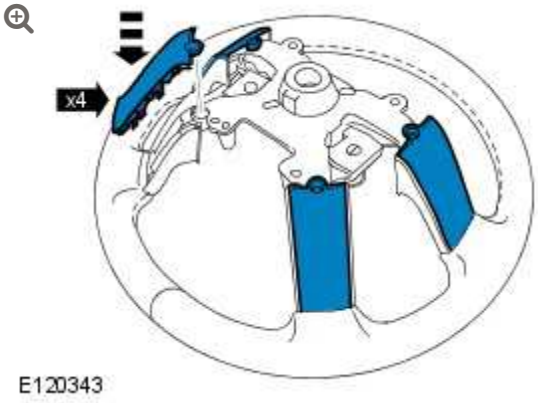

4.

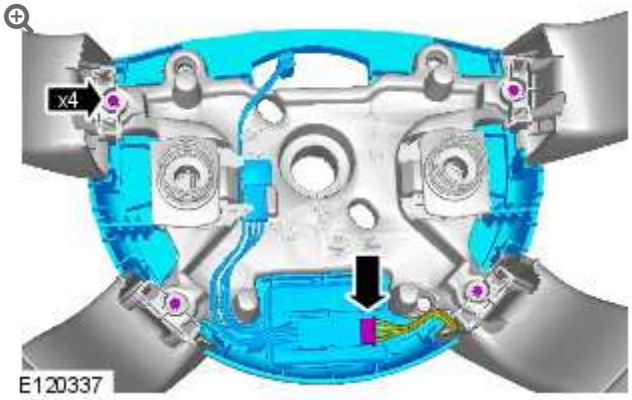

Vehicles with 4.4L diesel engine

5.

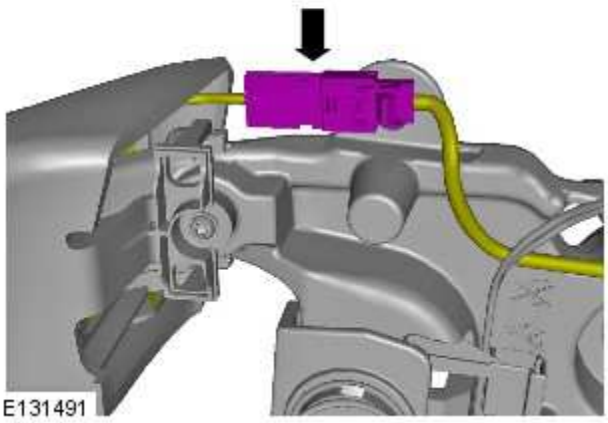

6.

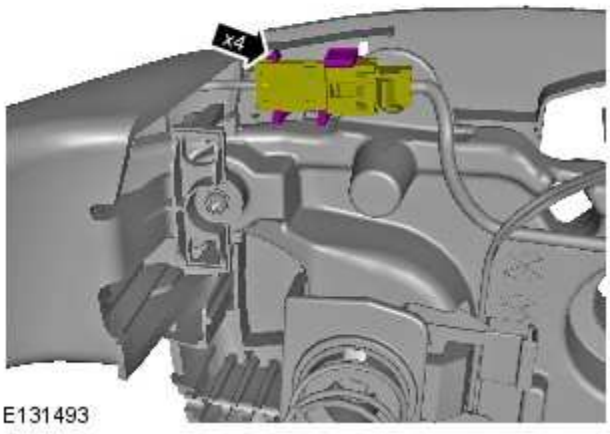

Right-hand drive vehicles

7.

CAUTIONS:

- Make sure that the wheels and tires are in the straight-ahead position. Failure to follow this instruction may result in damage to the components.
- RHD vehicles: With the wheels and tires in the straight-ahead position, the bottom timing mark on the steering column must be aligned with the steering wheel mark, see illustration below.



	Left-hand drive vehicles

8.

CAUTIONS:

- Make sure that the wheels and tires are in the straight-ahead position. Failure to follow this instruction may result in damage to the components.
- LHD vehicles: With the wheels and tires in the straight-ahead position, the bottom timing mark on the steering column must be aligned with the steering wheel mark, see illustration below.



All vehicles

9.

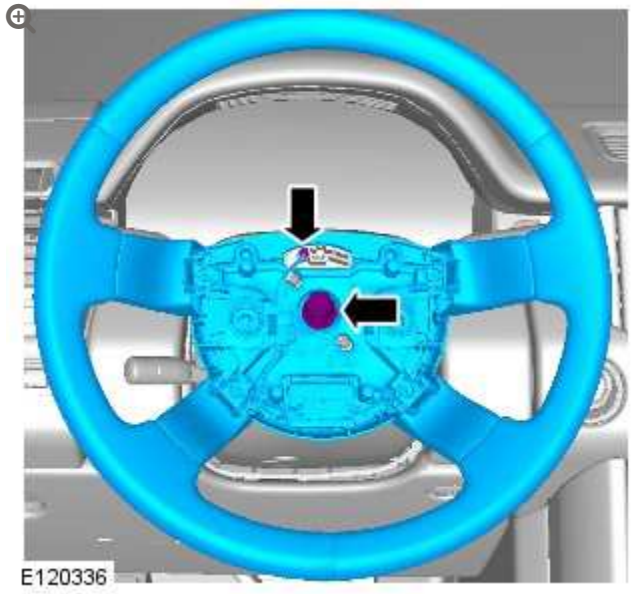

Torque: **63 Nm**

10. Install the driver air bag module.
    Refer to: Driver Air Bag Module (501-20, Removal and Installation).

11. Connect the battery ground cable.
    Refer to: Specifications (414-00, Specifications).

2012.0 RANGE ROVER (LM), 211-05

STEERING COLUMN SWITCHES

SPECIFICATIONS

Torque Specifications

DESCRIPTION	NM	LB-FT
Steering column switch Torx screws	3	2

STEERING COLUMN SWITCHES

STEERING COLUMN CONTROL SWITCH (G899535)

REMOVAL AND INSTALLATION

57.41.05	SWITCH - COLUMN ADJUSTMENT - CONTROL - RENEW	ALL DERIVATIVES	0.1	USED WITHINS	+

REMOVAL

1. Release the steering column extension gaiter.
   - Release the 6 clips.

2. **NOTE:**

   The steering wheel is shown removed for clarity.

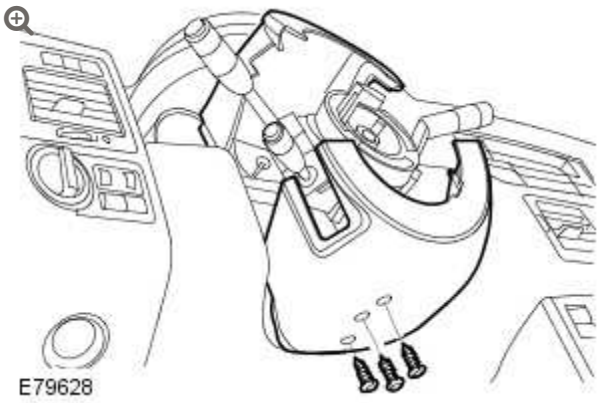

Remove the steering column lower shroud.

- Remove the 3 screws.

3. Remove the steering column upper shroud.

4. 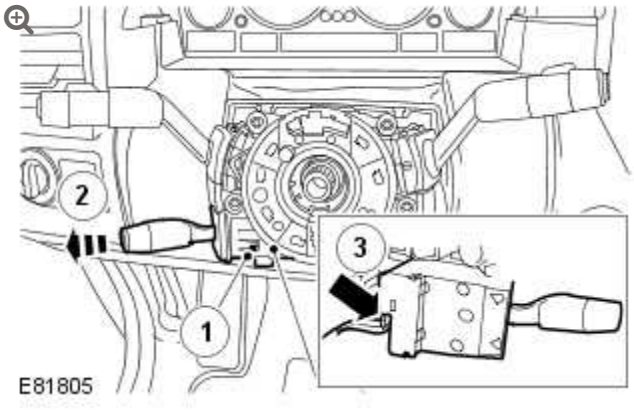

Remove the steering column control switch.

1. Carefully release the clip.
2. Release the steering column control switch.
3. Disconnect the electrical connector.

INSTALLATION

1. Install the steering column control switch.

- Connect the electrical connector.

2. Install the steering column upper shroud.

3. Install the steering column lower shroud.
   - Install the 3 screws.

4. Attach the steering column extension gaiter.

STEERING COLUMN SWITCHES

STEERING COLUMN MULTIFUNCTION SWITCH LH (G1239687)

REMOVAL AND INSTALLATION

86.65.55	SWITCH - COMBINED TURN SIGNAL INDICATOR/HEADLAMP/HORN - RENEW	ALL DERIVATIVES	0.4	USED WITHINS +

REMOVAL

WARNINGS:

- Persons working on the supplemental restraint system (SRS) must be fully trained and have been issued with the safety guidelines.
- Allow a period of 10 minutes to elapse after disconnecting the battery before undertaking any work on the SRS.
- The SRS electrical connectors are unique. DO NOT force, or attempt to connect electrical connectors to the wrong sockets.
- The correct procedures must always be used when working on SRS components.
- It is imperative that before any work is undertaken on the SRS system, the appropriate information is read thoroughly.
- Always disconnect both battery cables before beginning work on the SRS system. Disconnect the ground cable first. Never reverse connect the battery.
- Take extra care when handling SRS components.

1. Make the air bag supplemental restraint system (SRS) safe.
   For additional information, refer to: Standard Workshop Practices (100-00, Description and Operation).

2. Disconnect the battery ground cable.
   For additional information, refer to: Specifications (414-00, Specifications).

3. Remove the clockspring.
   For additional information, refer to: Clockspring (501-20, Removal and Installation).

4.



E79631

Remove the steering column control switch.

- Carefully release the clip.

5.

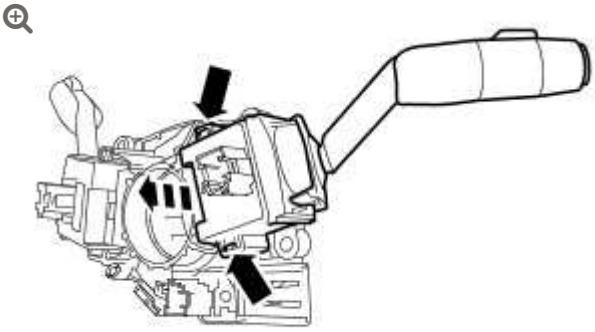

E79632

Remove the LH steering column multifunction switch.

- Release the 2 clips.

INSTALLATION

1. Install LH steering column multifunction switch.

2. Install the steering column control switch.

3. Install the clockspring.
   For additional information, refer to: Clockspring (501-20, Removal and Installation).

4. Connect the battery ground cable.
   For additional information, refer to: Specifications (414-00, Specifications).

STEERING COLUMN SWITCHES

DIAGNOSIS AND TESTING

For additional information. REFER to:

Steering System (211-00, Diagnosis and Testing),
Turn Signal, Cornering and Hazard Lamps (417-01, Diagnosis and Testing),
Wipers and Washers (501-16, Diagnosis and Testing).

ENGINE SYSTEM – GENERAL INFORMATION

BEARING INSPECTION (G61255)

GENERAL PROCEDURES

1.

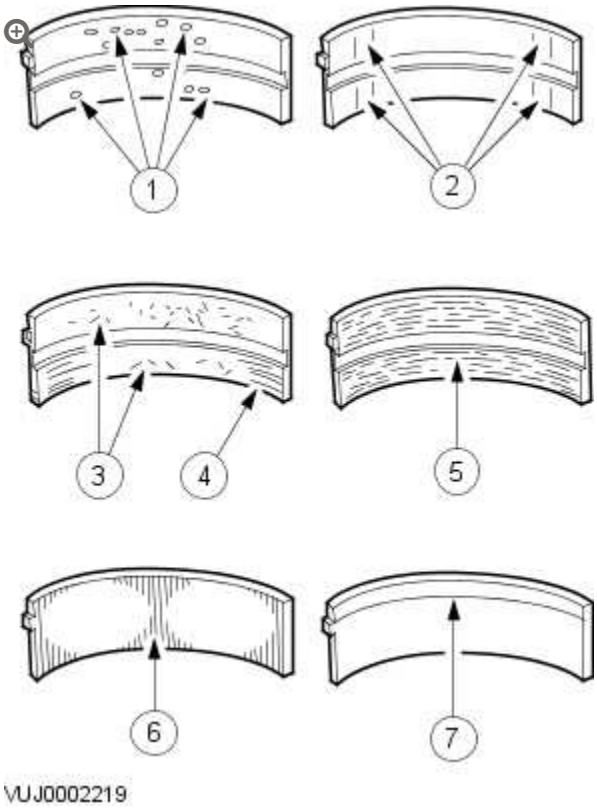

Inspect bearings for the following defects.

1. Cratering - fatigue failure
2. Spot polishing - incorrect seating.
3. Imbedded dirt engine oil.
4. Scratching - dirty engine oil.

5. Base exposed - poor lubrication.
6. Both edges worn - journal damaged.
7. One edge worn - journal tapered or bearing not seated.

ENGINE SYSTEM – GENERAL INFORMATION

CAMSHAFT BEARING JOURNAL DIAMETER (G61234)

GENERAL PROCEDURES

1.

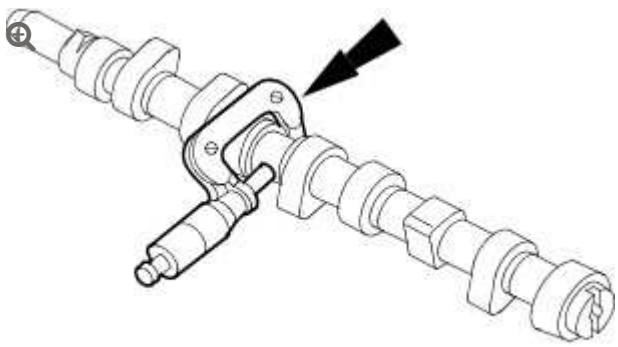

VUJ0001695

Determine the diameter of the camshaft journals.

- Using a micrometer measure the diameter at 90 degrees intervals to determine if the journals are out-of-round.
- Measure at two different points on the journal to determine if there is any tapering.
- If the measurements are out of the specified range, install a new camshaft.

ENGINE SYSTEM – GENERAL INFORMATION

CAMSHAFT END PLAY (G61236)

GENERAL PROCEDURES

1. **NOTE:**

   Make sure that the camshaft is to specification.

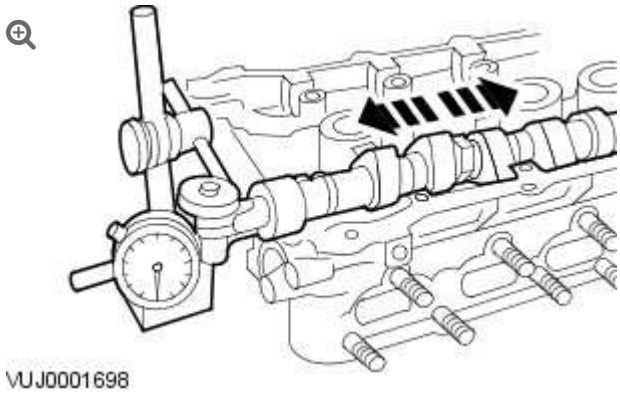

Using the special tool, measure the end play.

- Slide the camshaft in both directions. Read and note the maximum and minimum values on the dial indicator gauge.
  - End play = maximum value minus minimum value.
- If the measurement is out of specification, install new components.

ENGINE SYSTEM – GENERAL INFORMATION

CAMSHAFT LOBE LIFT (G61238)

GENERAL PROCEDURES

1.

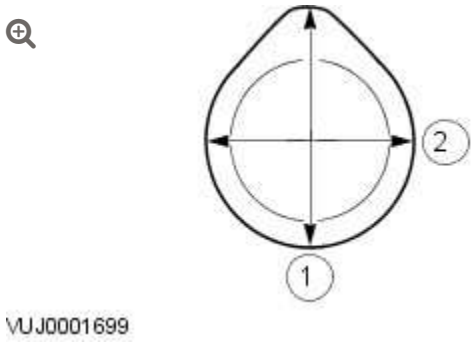

Measure the diameter (1) and diameter (2) with a vernier caliper. The difference in measurements is the lobe lift.

ENGINE SYSTEM – GENERAL INFORMATION

CAMSHAFT SURFACE INSPECTION (G61237)

GENERAL PROCEDURES

1.

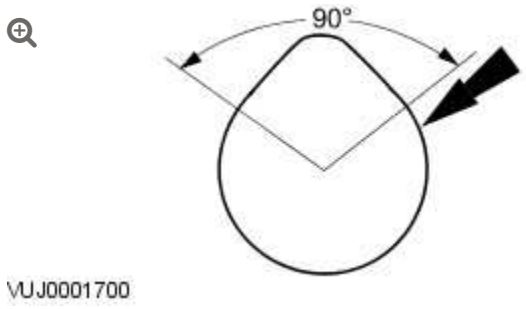

Inspect camshaft lobes for pitting or damage in the active area. Minor pitting is acceptable outside the active area.

ENGINE SYSTEM – GENERAL INFORMATION

CONNECTING ROD CLEANING (G61251)

GENERAL PROCEDURES

1. **CAUTION:**

   Do not use a caustic cleaning solution or damage to connecting rods may occur.

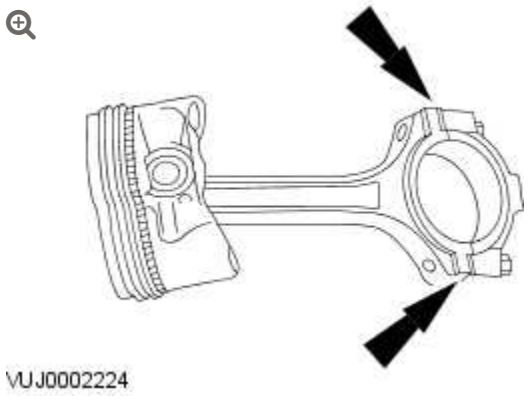

Mark and separate the parts and clean with solvent. Clean the oil passages.

ENGINE SYSTEM – GENERAL INFORMATION

CONNECTING ROD LARGE END BORE (G61252)

GENERAL PROCEDURES

1.

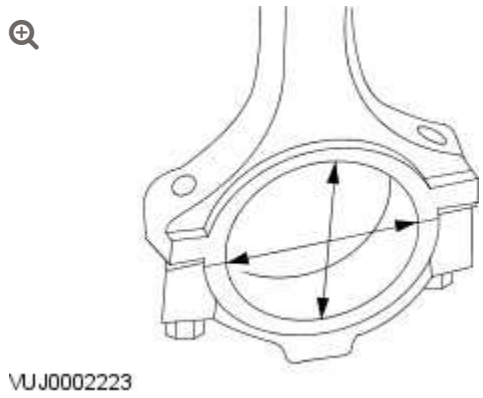

Measure the bearing bore in two directions. The difference is the connecting rod bore out-of-round. Verify the out-of-round is within specification.

2.

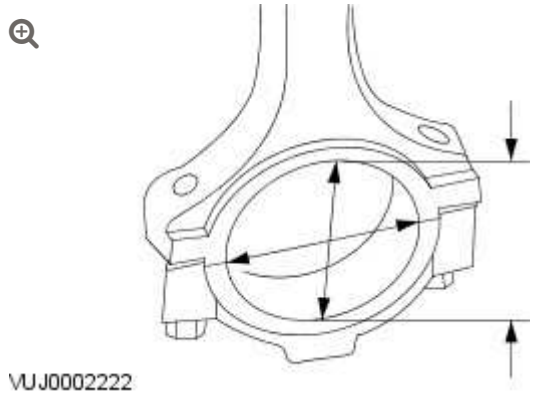

Measure the bearing bore diameter in two directions. Verify the bearing bore is within specification.

ENGINE SYSTEM – GENERAL INFORMATION

CRANKSHAFT END PLAY

(G61242)

GENERAL PROCEDURES

1.

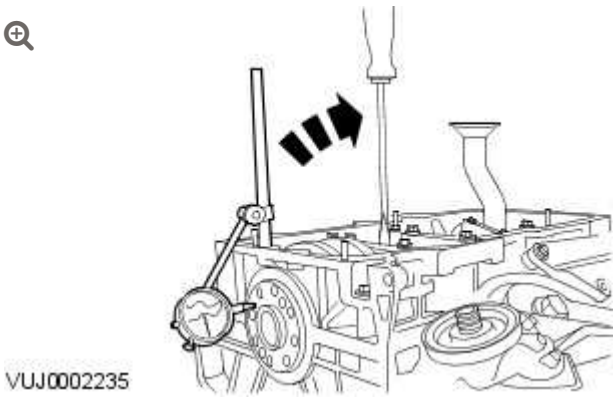

Using the Dial Indicator Gauge with Brackets, measure the end play.

- Measure the end play by lifting the crankshaft using a lever.
- If the value is out of the specification, install new thrust half rings to take up the end float and repeat the measurement.

ENGINE SYSTEM – GENERAL INFORMATION

CYLINDER BORE OUT-OF-ROUND (G61243)

GENERAL PROCEDURES

1. **NOTE:**

   The main bearing caps or lower crankcase must be in place and tightened to the specified torque; however, the bearing shells should not be installed.

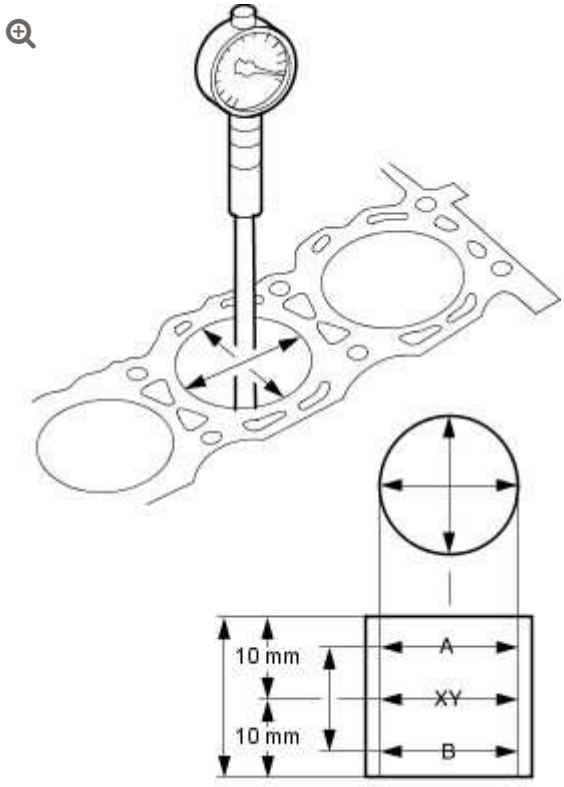

VUJ0002234

Measure the cylinder bore with an internal micrometer.

- Carry out the measurements in different directions and at different heights to determine if there is any out-of-roundness or tapering.
- If the measurement is out of the specified range, hone out the cylinder block or install a new block.

ENGINE SYSTEM – GENERAL INFORMATION

CYLINDER COMPRESSION TEST – V8 S/C 5.0L PETROL (G1770716)

GENERAL PROCEDURES

12.25.01	CYLINDERS PRESSURES - CHECK	5000 CC, AJ V8, SUPERCHARGED	1.2	USED WITHINS

CHECK

CAUTION:

Before disconnecting or removing components, make sure the area around the joint faces and connections are clean. Plug open connections to prevent contamination.

NOTES:

- Removal steps in this procedure may contain installation details.
- Some variation in the illustrations may occur, but the essential information is always correct.
- The vehicle battery must be in good condition and fully charged before carrying out this procedure.

1. Refer to: Ignition Coil-On-Plug (303-07 Engine Ignition - V8 5.0L Petrol/V8 S/C 5.0L Petrol, Removal and Installation).

2. **CAUTION:**

   Make sure the fuel injection system is disabled before carrying out a cylinder compression test. Failure to follow this step may result in damage to the vehicle.

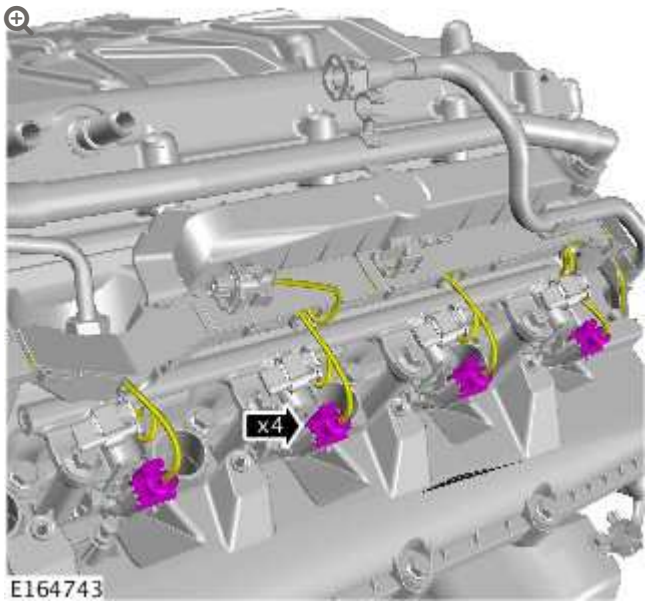

Repeat procedure for the other side.

3. Crank engine for approximately five seconds to remove any remaining fuel in the cylinders.

4. **NOTE:**

Dry cylinder compression test.

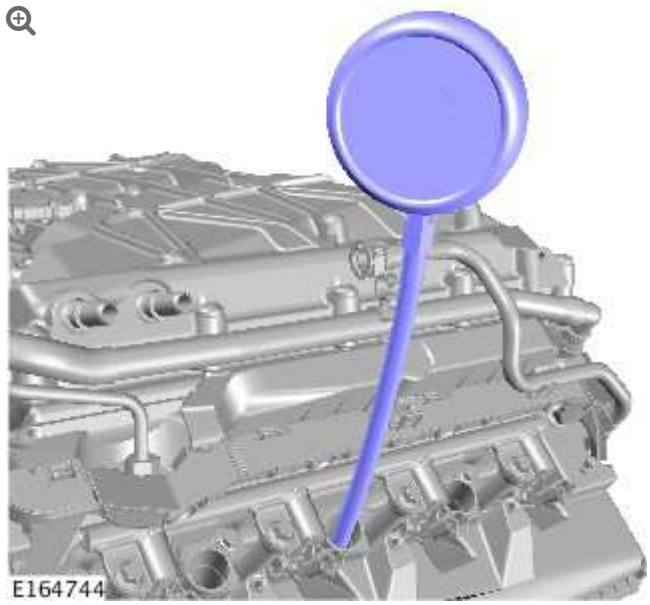

Install the compression test gauge.

5. **NOTES:**

- This step requires the aid of another technician.
- Print graphic number E164747 in step 11. Use this graphic to record each cylinder compression figure.
- The vehicle battery must be in good condition and fully charged before carrying out this procedure.

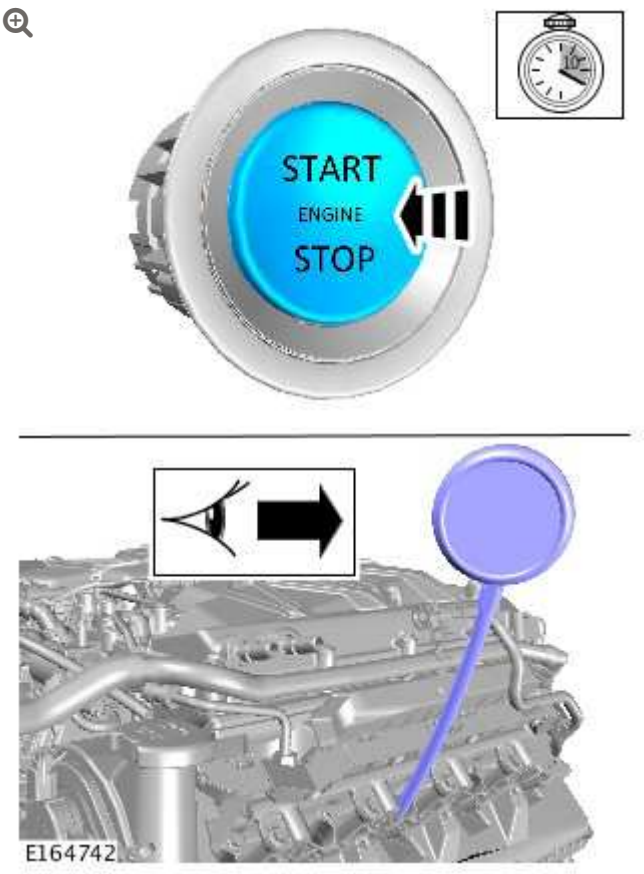

Crank the engine for 10 seconds and record the figure displayed on the compression test gauge. Make sure the pressure is released from the compression test gauge after each cylinder recording. Repeat the process for all cylinders.

6.

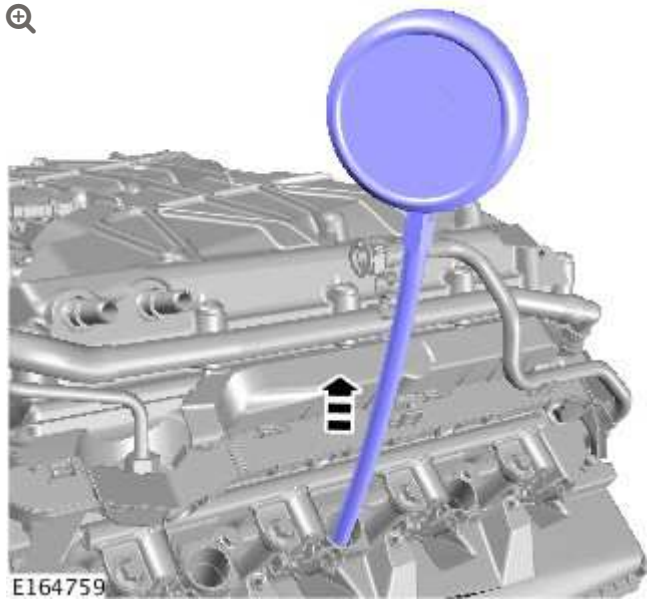

Remove the compression test gauge.

7.

NOTE:

Wet cylinder compression test.

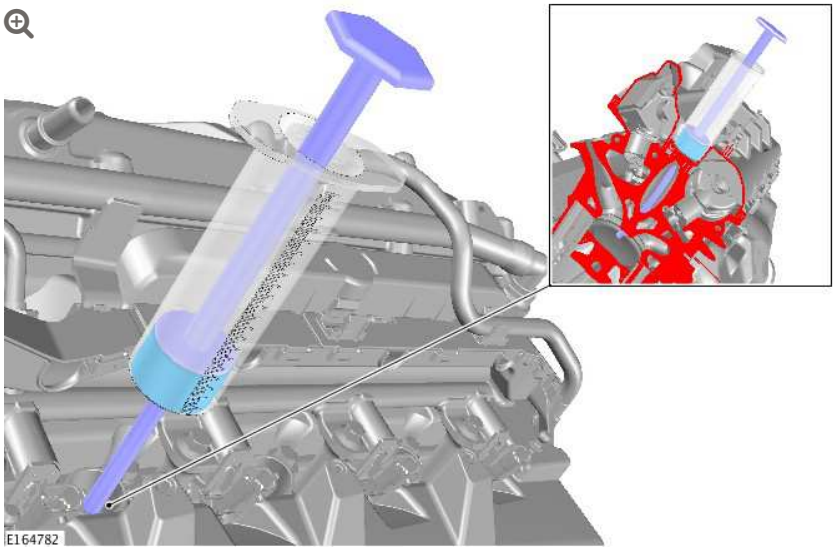

Using a suitable syringe add 10 ml of clean engine oil into the cylinder.

8.

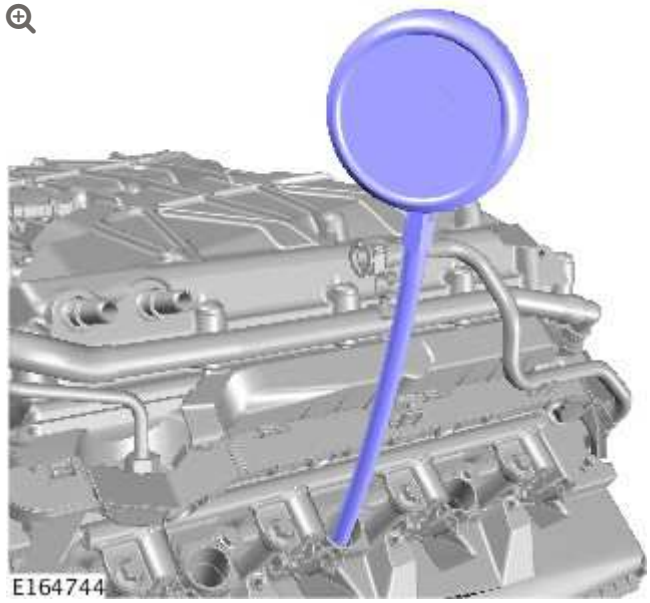

Install the compression test gauge.

9. **NOTES:**

- This step requires the aid of another technician.
- Print graphic number E164747 in Step 11. Use this graphic to record each cylinder compression figure.
- The vehicle battery must be in good condition and fully charged before carrying out this procedure.

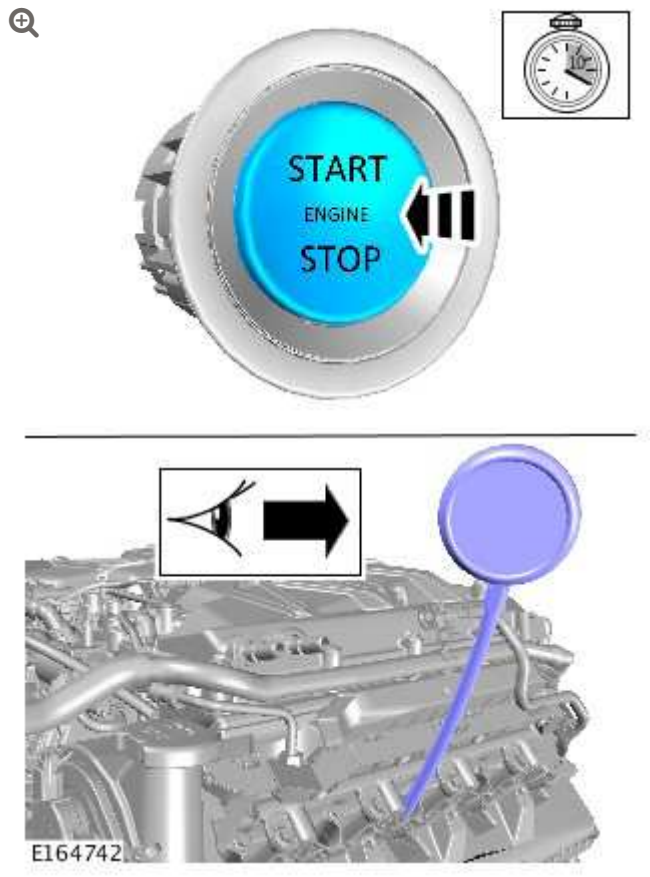

Crank the engine for 10 seconds and record the figure displayed on the compression test gauge. Make sure the pressure is released from the compression test gauge after each cylinder recording. Repeat the process for all cylinders.

10. After each wet cylinder compression test remove the compression test gauge and crank engine for approximately 10 seconds to remove engine oil from the cylinder.

11. **NOTES:**

- A= dry cylinder compression test.
- B= wet cylinder compression test.

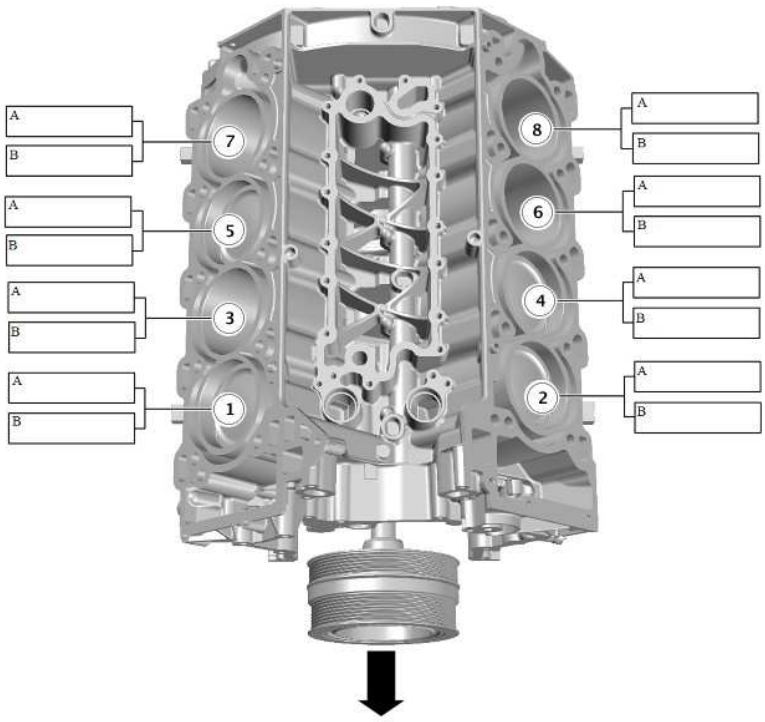

E164747

12. **NOTE:**

Remove and discard all blanking caps.

To install, reverse the removal procedure.

13. The minimum cylinder compression reading recorded must be within 10% of the maximum cylinder compression reading recorded. If the difference across the cylinders is higher than 10% please contact dealer technical support (DTS) for further assistance.

14. Using Land Rover approved diagnostic equipment, read and clear any diagnostic trouble codes (DTCs).

2012.0 RANGE ROVER (LM), 303-00

ENGINE SYSTEM – GENERAL INFORMATION

CYLINDER HEAD DISTORTION (G1676086)

GENERAL PROCEDURES

CHECK

1.

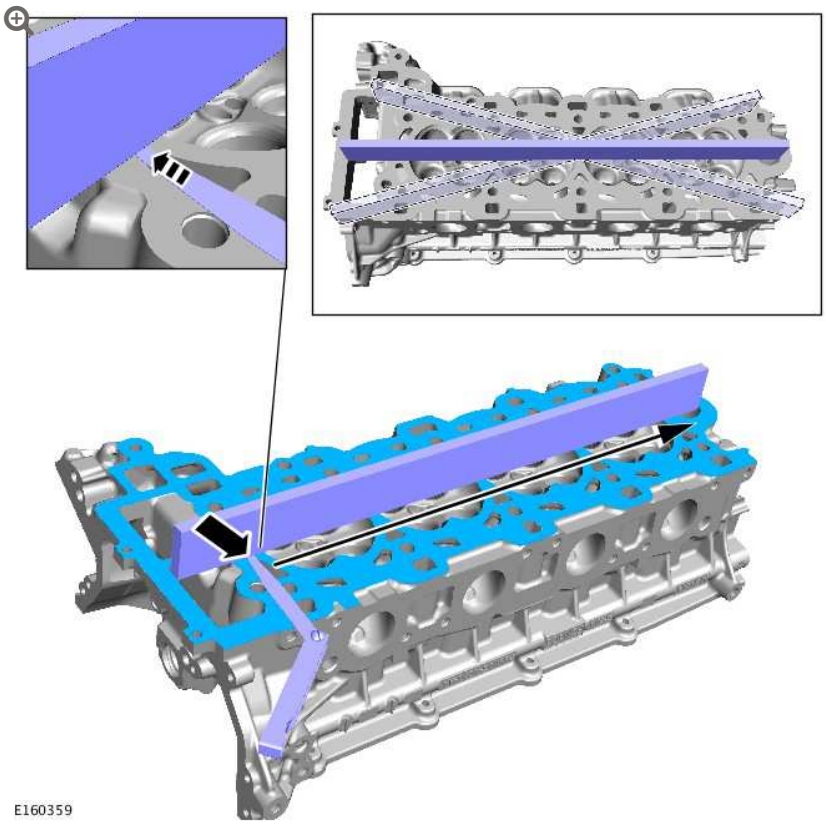

Using a suitable metallic straight edge and feeler gauge,

measure the cylinder head face in the areas illustrated. **Note the maximum value**.

2.

CAUTION:

> Machine the **minimum** thickness of material from the cylinder head to meet specification. If a selection of cylinder head gaskets are available, increase the thickness of the cylinder head gasket by one size.

NOTES:

> - Prior to having the cylinder head machined, prior approval is required by Jaguar or Land Rover engineering.
> - If the cylinder head requires machining, this must be carried out by a local engineering company.

If the cylinder head exceeds the maximum value (0.2mm), the cylinder head must be machined.

ENGINE SYSTEM – GENERAL INFORMATION

DIAGNOSIS AND TESTING

12.90.09.01	ENGINE OIL PRESSURE CHECK	AJ V8, SUPERCHARGED	0.9	USED WITHINS

SPECIAL TOOL(S)



303–1451

Oil pressure testing adaptor



303-871

Oil pressure testing gauge

PRINCIPLE OF OPERATION

For a detailed description of the 5.0L engine, refer to the relevant Description and Operation sections in the workshop manual. REFER to:

Engine (303-01A Engine - V8 5.0L Petrol, Description and Operation), Engine (303-01B Engine - V8 S/C 5.0L Petrol, Description and Operation).

INSPECTION AND VERIFICATION

1. Verify the customer concern.
2. Visually inspect for obvious signs of damage and system integrity.

Visual Inspection

MECHANICAL	ELECTRICAL
▪ Coolant leaks ▪ Oil leaks ▪ Leaks in the fuel system	▪ Fuses ▪ Loose or corroded electrical connectors ▪ Harnesses

MECHANICAL	ELECTRICAL
▪ Visibly damaged or worn parts ▪ Loose or missing fixings	▪ Sensors

3. If an obvious cause for an observed or reported concern is found, correct the cause (if possible) before proceeding to the next step.

4. If the concern is not visually evident, verify the symptom and refer to the Symptom Chart, alternatively check for Diagnostic Trouble Codes (DTCs) and refer to the relevant DTC Index.

SYMPTOM CHART

NOTES:

- If an engine is suspect, and the vehicle remains under the Manufacturers warranty refer to the Warranty Policy and Procedure manual (section B1.2), or determine if any prior approval programme is in operation, prior to the installation of a new engine.
- Due to the possibility of loose carbon, that has become trapped between the valve face and seat, effecting the pressure readings, when carrying out a compression test and some cylinders are found to have low pressures, install the spark plugs, road test the vehicle and re-test the suspect cylinders. If the correct pressures are restored, no further action is required.

SYMPTOM	ACTION
All engine related issues	▪ Check ECM for Diagnostic Trouble Codes (DTCs) and refer to DTC Index.

SYMPTOM	ACTION

Difficult to start hot and cold	▪ Carry out general engine checks:
	  ▪ Compression test. Refer to component tests in this section.
	  ▪ Valve clearances
	  ▪ Spark plug condition and color

Poor idle	▪ Ensure the air intake system is free from leaks
	▪ Carry out general engine checks:
	  ▪ Compression test. Refer to component tests in this section.
	  ▪ Valve clearances
	  ▪ Spark plug condition and color
	▪ Check for collapsed catalytic converter/blocked exhaust system
	▪ Check long and short term fuel trim datalogger signals
	  ▪ Readings up to 10%: may be considered as acceptable if the readings are equal bank to bank
	  ▪ Positive readings of between 10-20%: check for air leaks in air intake system
	  ▪ Negative readings of between 10-20%: check for over fuelling e.g. leaking injectors, high fuel pressure
	  ▪ Readings above 20%: check for DTCs and refer to DTC Index.
	▪ Carry out a vacuum gauge check. Refer to component tests in this section

Insufficient power/Insufficient compression	▪ Ensure the air intake system is free from leaks
	▪ Carry out general engine checks:
	  ▪ Compression test. Refer to component tests in this section.
	  ▪ Valve clearances
	  ▪ Spark plug condition and color
	▪ Check for collapsed catalytic converter/blocked exhaust system

SYMPTOM	ACTION

	▪ Check long and short term fuel trim datalogger signals
	  ▪ Readings up to 10%: may be considered as acceptable if the readings are equal bank to bank
	  ▪ Positive readings of between 10-20%: check for air leaks in air intake system
	  ▪ Negative readings of between 10-20%: check for over fuelling e.g. leaking injectors, high fuel pressure
	  ▪ Readings above 20%: check for DTCs and refer to DTC Index.
	▪ Carry out a vacuum gauge check. Refer to component tests in this section

Oil consumption	▪ Carry out oil leak check followed by an oil consumption test. Refer to the component tests in this section
	▪ If oil consumption is excessive:
	▪ Check the integrity of the engine breather system
	▪ Carry out general engine checks:
	  ▪ Compression test. Refer to component tests in this section.
	  ▪ Valve clearances
	  ▪ Spark plug condition and color

DTC INDEX

For a list of Diagnostic Trouble Codes (DTCs) that could be logged on this vehicle, please refer to Section 100-00. REFER to: Diagnostic Trouble Code (DTC) Index - V8 5.0L Petrol/V8 S/C 5.0L Petrol (100-00 General Information, Description and Operation).

COMPONENT TESTS

ENGINE OIL LEAKS

NOTE:

> Before installing new gaskets or oil seals, make sure that the fault is clearly established.

If the oil leak cannot be identified clearly by a visual inspection, carry out an Ultraviolet test:

FLUORESCENT OIL ADDITIVE METHOD

1. Clean the engine with a suitable cleaning fluid (brake cleaner).
2. Drain the engine oil and refill with recommended oil, premixed with Diesel Engine Oil Dye or equivalent. Use a minimum 14.8 ml (0.5 ounce) to a maximum 29.6 ml (1 ounce) of fluorescent additive to all engines. If oil is not premixed, fluorescent additive must first be added to the crankcase.
3. Run engine for 15 minutes. Stop the engine and inspect all seal and gasket areas for leaks using a 12 Volt Master UV Diagnostic Inspection Kit or equivalent. A clear bright yellow or orange area will identify leak. For extremely small leaks, several hours may be required for the leak to appear.
4. As necessary, pressurize the main oil gallery system to locate leaks due to incorrectly sealed, loose or cocked plugs. If the flywheel bolts leak oil, look for sealer on the threads.
5. Repair all leaks as necessary.

COMPRESSION TEST

GENERAL REMARKS

NOTES:

- Removing fuses and disconnecting electrical components may cause the Engine Control Module (ECM) to log Diagnostic Trouble Codes (DTCs). After the measurements have been carried out, DTCs should be cleared from memory by connecting to the Manufacturer Approved Diagnostic System.
- Only check the compression pressure with the valves set to the prescribed clearance (if this can be adjusted).

The compression pressure should be checked with the engine at normal operating temperature.

CHECK THE COMPRESSION PRESSURE

WARNING:

Move gear selector lever to 'P' position. Failure to follow this instruction may result in personal injury.

1. Remove the fuel pump relay.
2. Start the engine - the engine will start, run for a few seconds then stall.
3. Remove the spark plugs.
4. Install the compression tester.
5. Install an auxiliary starter switch in the starting circuit. With the ignition switch OFF, using the auxiliary starter switch, crank the engine a minimum of five compression strokes and record the

highest reading. Note the approximate number of compression strokes required to obtain the highest reading.

6. Repeat the test on each cylinder, cranking the engine approximately the same number of compression strokes.

7. Install the removed components in reverse order, observing the specified tightening torques.

8. Clear all DTCs from the ECM.

INTERPRETATION OF THE RESULTS

NOTE:

> Due to the possibility of loose carbon that has become trapped between the valve face and seat effecting the pressure readings, when carrying out a compression test and cylinders are found to have low pressures, install the spark plugs, road test the vehicle and re-test the suspect cylinders. If the correct pressures are restored, no further action is required.

The minimum cylinder compression reading recorded must be within 10% of the maximum cylinder compression reading recorded.

If the cylinder pressures are found to be low, carry out a leakdown test to determine the location of the fault (if any leakback can be heard through the engine breather system suspect the piston rings, if any leakback can be heard through the inlet system suspect the inlet valve or seat, if any leakback can be heard through the exhaust manifold suspect the exhaust valve or seat. If the measurements for two cylinders next to each other are both too low then it is very likely that the cylinder head gasket between them is burnt through. This can also be recognized by traces of engine oil in the coolant and/or coolant in the engine oil).

OIL CONSUMPTION TEST

The amount of oil an engine uses will vary with the way the vehicle is driven in addition to normal engine-to-engine variation. This is especially true during the first 16,100 km (10,000 miles) when a new engine is being broken in or until certain internal components become conditioned. Vehicles used in heavy-duty operation may use more oil. The following are examples of heavy-duty operation:

- Trailer towing applications
- Severe loading applications
- Sustained high speed operation

Engines need oil to lubricate the following internal components:

- Cylinder block cylinder walls
- Pistons and piston rings
- Intake and exhaust valve stems
- Intake and exhaust valve guides
- All internal engine components

When the pistons move downward, a thin film of oil is left on the cylinder walls. As the vehicle is operated, some oil is also drawn into the combustion chambers past the intake and exhaust valve stem seals and burned.

The following are examples of conditions that can affect oil consumption rates:

- Engine size
- Operator driving habits

- Ambient temperatures
- Quality and viscosity of oil
- Engine is being run in an overfilled condition (check the oil level at least five minutes after a hot shutdown with the vehicle parked on a level surface. The oil level should not be above the top of the cross-hatched area and the letter "F" in FULL).

Operation under varying conditions can frequently be misleading. A vehicle that has been run for several thousand miles on short trips or in below-freezing ambient temperatures may have consumed a "normal" amount of oil. However, when checking the engine oil level, it may measure up to the full mark on the oil level indicator due to dilution (condensation and fuel) in the engine crankcase. The vehicle then might be driven at high speeds on the highway where the condensation and fuel boil off. The next time the engine oil is checked it may appear that a liter of oil was used in about 160 km (100 miles). Oil consumption rate is about one liter per 2,400 km (1,500 miles).

Make sure the selected engine oil meets Jaguar specification and the recommended API performance category "SG" and SAE viscosity grade as shown in the vehicle Owner's Guide. It is also important that the engine oil is changed at the intervals specified for the typical operating conditions.

The following diagnostic procedure is used to determine the source of excessive oil consumption.

NOTE:

Oil use is normally greater during the first 16,100 km (10,000 miles) of service. As mileage increases, oil use decreases. High speed driving, towing, high ambient temperature and other factors may result in greater oil use.

1. Define excessive consumption, such as the number of miles driven per liter of oil used. Also determine customers driving habits, such as sustained high speed operation, towing, extended idle and other considerations.

2. Verify that the engine has no external oil leaks as described under Engine Oil Leaks in this section.

3. Carry out an oil consumption test:
    - Run the engine to normal operating temperature. Switch engine OFF and allow oil to drain back for at least five minutes .
    - With vehicle parked on level surface, check the engine oil level.
    - If required, add engine oil to set level exactly to the FULL mark.
    - Record the vehicle mileage.
    - Instruct the customer to return for a level check after driving the vehicle as usual for 1,610 km (1000 miles).
    - Check the oil level under the same conditions and at the same location as the initial check.

NOTE:

If the oil consumption rate is unacceptable go to Step 4.

4. Check the Positive Crankcase Ventilation (PCV) system. Make sure the system is not plugged.

5. Check for plugged oil drain-back holes in the cylinder head and cylinder block.

6.

If the condition still exists after carrying out the above tests go to step 9.

7. Carry out a cylinder compression test. Refer to the Compression Test procedure in this section. This can help determine the source of oil consumption such as valves, piston rings or other areas.

8. Check valve guides for excessive guide clearance. Install new valve stem seals after verifying valve guide clearance.

9. Worn or damaged internal engine components can cause excessive oil consumption. Small deposits of oil on the tips of the spark plugs can be a clue to internal oil consumption.

INTAKE MANIFOLD VACUUM TEST

Bring the engine to normal operating temperature. Connect a vacuum gauge or equivalent to the intake manifold. Run the engine at the specified idle speed.

The vacuum gauge should read between 51-74 kPa (15-22 in-Hg) depending upon the engine condition and the altitude at which the test is performed. Subtract 4.0193 kPa (1 in-Hg) from the specified reading for every 304.8 m (1,000 feet) of elevation above sea level.

The reading should be steady. As necessary, adjust the gauge damper control (where used) if the needle is fluttering rapidly. Adjust damper until needle moves easily without excessive flutter.

INTERPRETING VACUUM GAUGE READINGS

A careful study of the vacuum gauge reading while the engine is idling will help pinpoint trouble areas. Always conduct other appropriate tests before arriving at a final diagnostic decision.

Vacuum gauge readings, although helpful, must be interpreted carefully.

Most vacuum gauges have a normal band indicated on the gauge face.

The following are potential gauge readings. Some are normal; others should be investigated further.

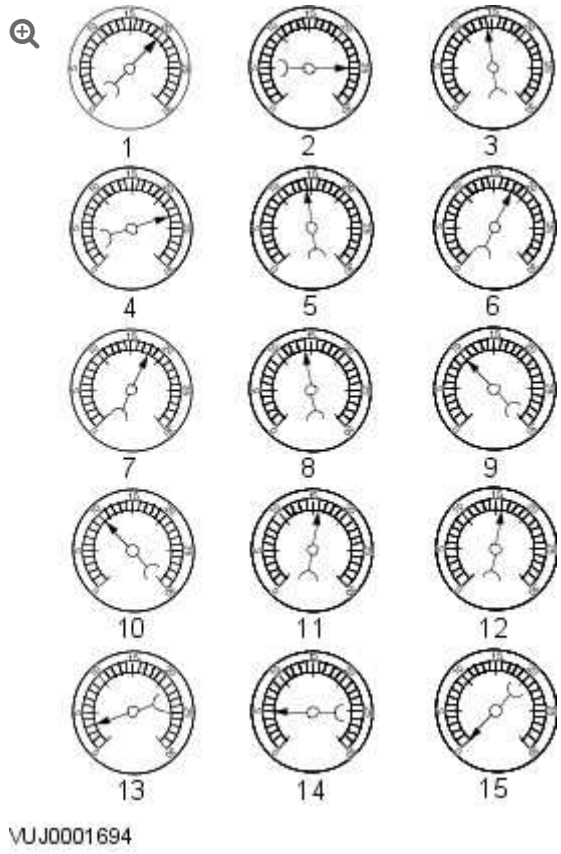

1. NORMAL READING: Needle between 51-74 kPa (15-22 in-Hg) and holding steady.

2. NORMAL READING DURING RAPID ACCELERATION: When the engine is rapidly accelerated, the needle will drop to a low (not to zero) reading. When the throttle is suddenly released, the needle will snap back up to a higher than normal figure.

3.

NORMAL FOR HIGH-LIFT CAMSHAFT WITH LARGE OVERLAP: The needle will register as low as 51 kPa (15 in-Hg) but will be relatively steady. Some oscillation is normal.

4. WORN RINGS OR DILUTED OIL: When the engine is accelerated, the needle drops to 0 kPa (0 in-Hg). Upon deceleration, the needle runs slightly above 74 kPa (22 in-Hg).

5. STICKING VALVES: When the needle remains steady at a normal vacuum but occasionally flicks (sharp, fast movement) down and back about 13 kPa (4 in-Hg), one or more valves may be sticking.

6. BURNED OR BENT VALVES: A regular, evenly-spaced, downscale flicking of the needle indicates one or more burned or damaged valves. Insufficient hydraulic valve tappet or hydraulic lash adjuster clearance will also cause this reaction.

7. POOR VALVE SEATING: A small but regular downscale flicking can mean one or more valves are not seating correctly.

8. WORN VALVE GUIDES: When the needle oscillates over about a 13 kPa (4 in-Hg) range at idle speed, the valve guides could be worn. As engine speed increases, the needle will become steady if guides are responsible.

9. WEAK VALVE SPRINGS: When the needle oscillation becomes more violent as engine RPM is increased, weak valve springs are indicated. The reading at idle could be relatively steady.

10. LATE VALVE TIMING: A steady but low reading could be caused by late valve timing.

11. IGNITION TIMING RETARDED: Retarded ignition timing will produce a steady but somewhat low reading.

12.

INSUFFICIENT SPARK PLUG GAP: When spark plugs are gapped too close, a regular, small pulsation of the needle can occur.

13. INTAKE LEAK: A low, steady reading can be caused by an intake manifold or throttle body gasket leak.

14. BLOWN HEAD GASKET: A regular drop of fair magnitude can be caused by a blown head gasket or warped cylinder head to cylinder block surface.

15. RESTRICTED EXHAUST SYSTEM: When the engine is first started and is idled, the reading may be normal, but as the engine RPM is increased, the back pressure caused by a clogged muffler, kinked tail pipe or other concerns will cause the needle to slowly drop to 0 kPa (0 in-Hg). The needle then may slowly rise. Excessive exhaust clogging will cause the needle to drop to a low point even if the engine is only idling.

When vacuum leaks are indicated, search out and correct the cause. Excess air leaking into the system will upset the fuel mixture and cause concerns such as rough idle, missing on acceleration or burned valves. If the leak exists in an accessory such as the power brake booster, the unit will not function correctly. Always repair vacuum leaks.

ENGINE OIL PRESSURE CHECK

NOTE:

Prior to checking the engine oil pressure, a road test of 6 miles (10 kilometres), must be carried out. Do not attempt to attain engine normal operating temperature by allowing the engine to idle.

1. Disconnect the battery ground cable. Refer to section 414-00 - Charging System - General Information of the workshop manual

WARNINGS:

- The spilling of hot engine oil is unavoidable during this procedure, care must be taken to prevent scalding.
- Wear protective gloves.

2. Remove the engine oil filter element
   REFER to: Oil Filter Element (303-01A Engine - V8 5.0L Petrol, Removal and Installation).

NOTE:

Ensure the oil filter element is not contaminated during this procedure

3. Install the oil filter element into special tool (Oil filter adapter number 303-1451)
4. Install the special tool (Oil filter adapter number 303-1451) to the engine. Torque: 25 Nm
5. Install the special tool (Oil pressure testing gauge, 303-871) and tighten the union
6. Connect the battery ground cable
7. Refer to owner hand book, check and top-up the engine oil if required
8. Start and run the engine

9. Note the oil pressure readings with the engine running at idle and 3500 RPM

10. Turn off the engine

11. Disconnect the battery ground cable

12. Remove the special tools
    1. Clean the components

13. Install the engine oil filter element
    REFER to: Oil Filter Element (303-01A Engine - V8 5.0L Petrol, Removal and Installation).

NOTE:

> Ensure the oil filter element is not contaminated during this procedure

14. Connect the battery ground cable

15. Refer to owner hand book, check and top-up the engine oil if required

ENGINE SYSTEM – GENERAL INFORMATION

EXHAUST MANIFOLD CLEANING AND INSPECTION (G61240)

GENERAL PROCEDURES

1. Inspect the cylinder head joining flanges of the exhaust manifold for evidence of exhaust gas leaks.

2. Inspect the exhaust manifold for cracks, damaged gasket surfaces, or other damage that would make it unfit for further use.

ENGINE SYSTEM – GENERAL INFORMATION

LEAKAGE TEST USING SMOKE TEST EQUIPMENT

(G1445299)

GENERAL PROCEDURES

CAUTION:

The compressed air line supply pressure must be between 3.5 and 12 bar (50 and 175 psi) for the smoke test equipment to function correctly. Do not exceed this pressure. Failure to follow this instruction may result in damage to the smoke test equipment.

NOTES:

- The vehicle battery must be in good condition and fully charged before carrying out this procedure.
- On vehicles with 3.0L TDV6, it will be necessary to insert smoke at both air cleaner outlet pipes independently if the right hand turbocharger and associated hoses are to be tested.
- In some cases it may be necessary to remove undertrays, trim or engine covers to obtain access to all potential leak locations.
- Some variation in the illustrations may occur, but the essential information is always correct.
- For further information regarding operation of the test equipment refer to the manufacturers operators manual supplied with the kit.

1.

WARNING:

Use an additional support to prevent the hood from falling if the smoke test equipment is secured to the hood. Failure to follow this instruction may result in personal injury.

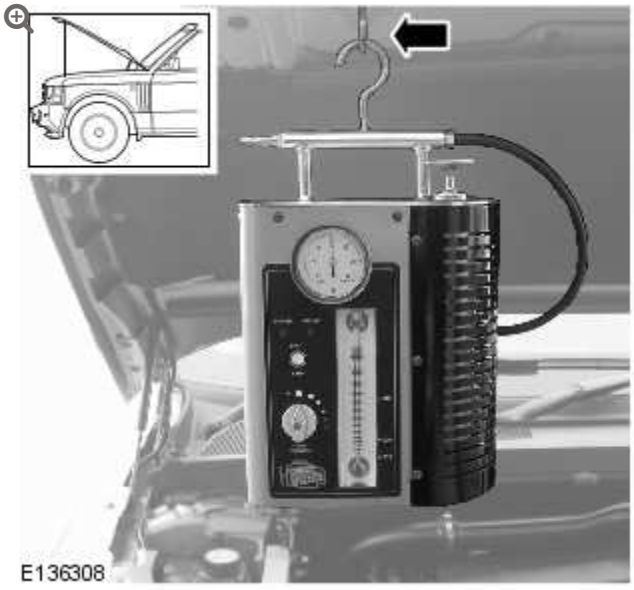

Install the smoke test equipment to a suitable location under the hood.

2. Connect a suitable compressed air line to the smoke test equipment.

3. Connect the smoke test equipment positive power cable to the battery positive terminal.

4. **WARNING:**

   Do not connect the smoke test equipment negative cable to the battery negative terminal.

   Connect the smoke test equipment negative cable to a suitable body ground point.

5.

NOTE:

A flashing green light indicates low battery voltage. In this case, place the battery on charge and make sure that the battery is fully charged before using the smoke test equipment.

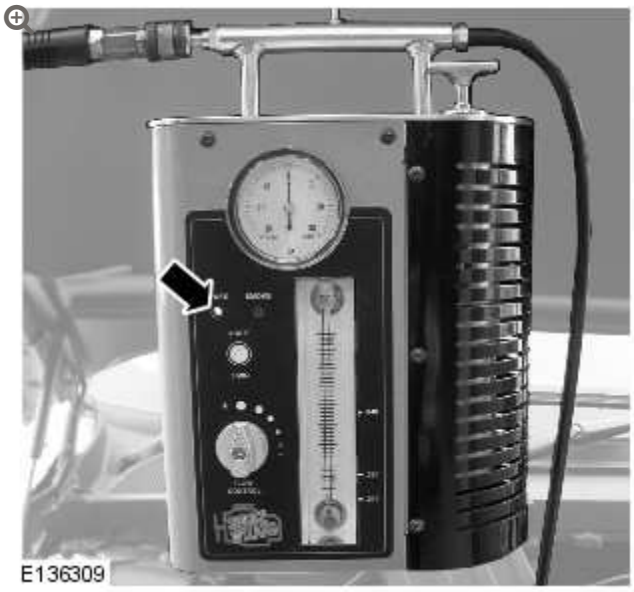

Observe the power indicator lamp on the smoke test equipment. Make sure that a continuous green light is displayed.

6.

NOTES:

- In some cases it may be necessary to remove the air cleaner(s) to allow access to the air cleaner outlet pipes.
- In some cases it will be necessary to cap one of the air cleaner outlet pipes. Use the blanking caps supplied in the kit to cap the open orifice.

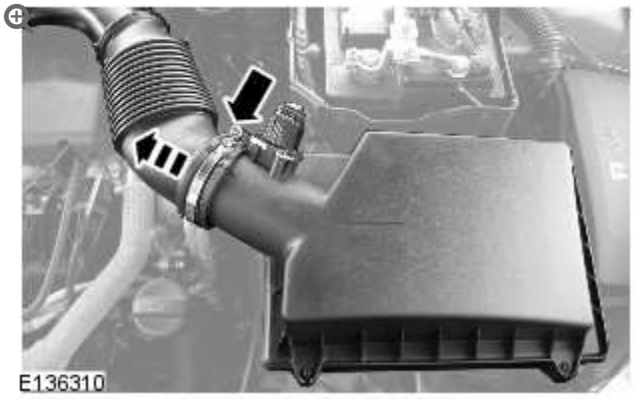

Disconnect the air cleaner outlet pipe(s).

7.

NOTE:

Make sure the smoke test equipment adapter is a good fit to the air cleaner outlet pipe. This must be an air tight seal.

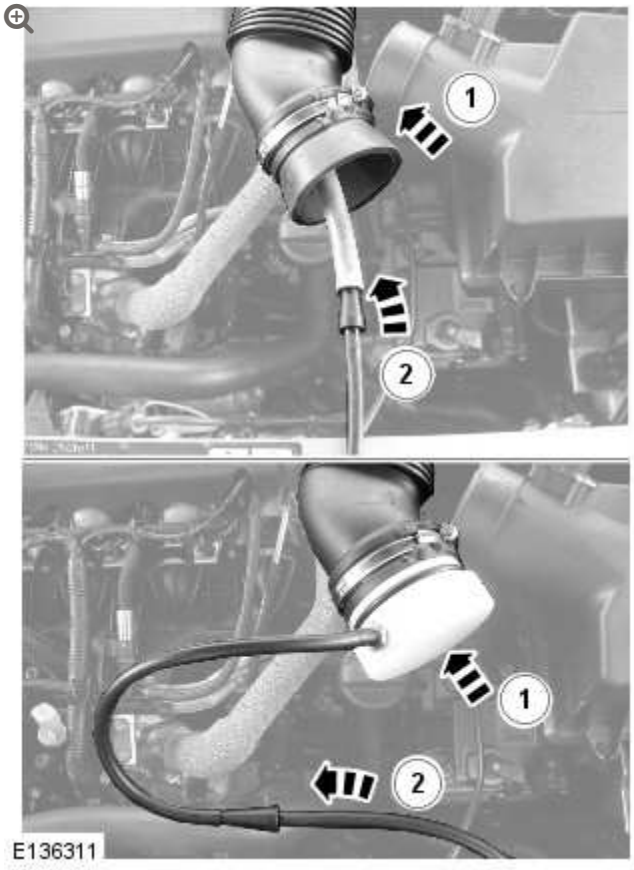

Connect the smoke test equipment supply hose to the air cleaner outlet pipe.

1. Install the appropriate adapter to the air cleaner outlet pipe.
2. Connect the smoke test equipment supply hose to the adapter link hose.

8.

NOTES:

- The flow control valve must be in the fully open position.
- Smoke is produced for 5 minutes. The smoke test equipment will automatically switch off after this period of time.



Switch the smoke test equipment on.

9. Remove the oil filler cap, and observe until a constant flow of smoke is visible leaving the oil filler orifice. Install the oil filler cap.

10. **NOTE:**

> The longer smoke is allowed to exit from a leak, the more fluorescent dye will be deposited at a leak location.

Using the torch supplied in the kit set to white light, look for escaping smoke. Alternatively, use the ultraviolet light to look for fluorescent dye deposits at the source of a leak.

ENGINE SYSTEM – GENERAL INFORMATION

PISTON INSPECTION (G61244)

GENERAL PROCEDURES

1. **CAUTION:**

   Do not use any aggressive cleaning fluid or a wire brush to clean the piston.

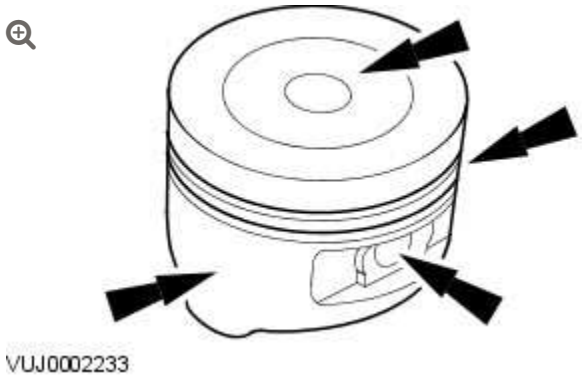

Carry out a visual inspection.

- Clean the piston skirt, pin bush, ring grooves and crown and check for wear or cracks.
- If there are signs of wear on the piston skirt, check whether the connecting rod is twisted or bent.

ENGINE SYSTEM – GENERAL INFORMATION

PISTON PIN DIAMETER (G61250)

GENERAL PROCEDURES

1. **NOTE:**

   The piston and piston pin are a matched pair. Do not mix up the components.

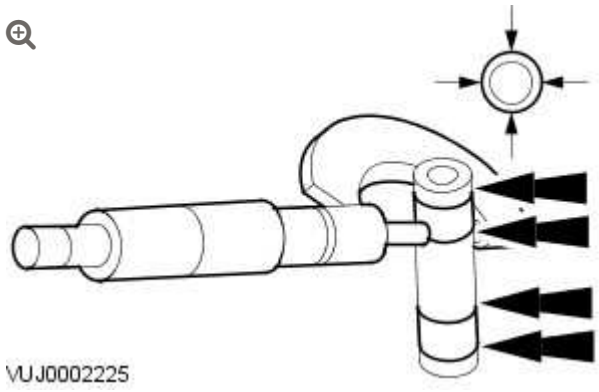

Measure the piston pin diameter.

- Measure the diameter in two directions.
- If the values are not to specification, install a new piston and a new piston pin.

ENGINE SYSTEM – GENERAL INFORMATION

PISTON PIN TO BORE DIAMETER (G61245)

GENERAL PROCEDURES

1.

NOTE:

The piston and piston pin form a matched pair. Do not mix up the components.

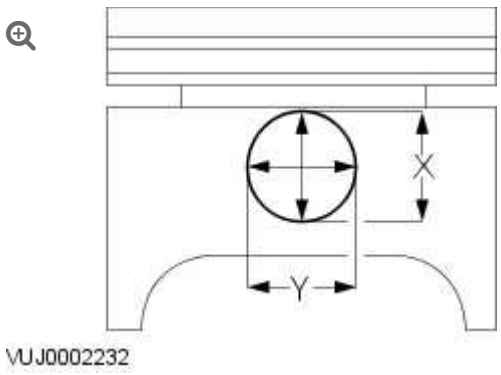

Measure the diameter of the piston pin bore.

- Measure the diameter in two directions.
- If the values are not to specification, install both a new piston and a new piston pin.

ENGINE SYSTEM – GENERAL INFORMATION

PISTON RING END GAP (G61248)

GENERAL PROCEDURES

1. **CAUTION:**

   Do not mix up the piston rings. Install the piston rings in the same position and location.

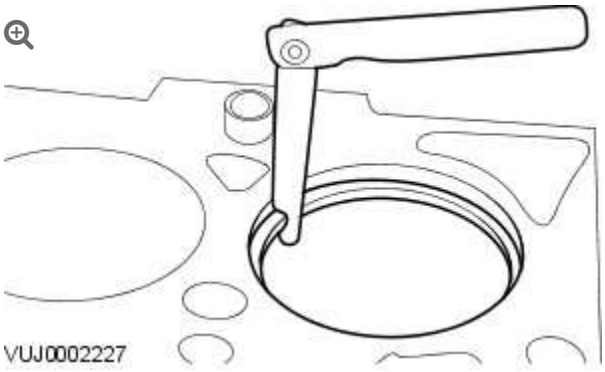

Using the Feeler Gauge, measure the piston ring gap.

- The values given in the specification refer to a gauge ring used during production.

ENGINE SYSTEM – GENERAL INFORMATION

PISTON RING–TO–GROOVE CLEARANCE (G61249)

GENERAL PROCEDURES

1. **NOTE:**

   The piston ring must protrude from the piston groove. To determine the piston ring clearance, insert the Feeler Gauge right to the back of the groove, behind the wear ridge.

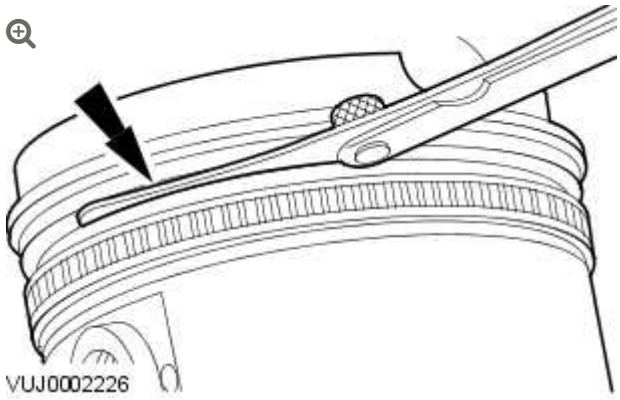

Using the Feeler Gauge, measure the piston ring clearance.

ENGINE SYSTEM – GENERAL INFORMATION

VALVE SPRING FREE LENGTH (G61254)

GENERAL PROCEDURES

1.

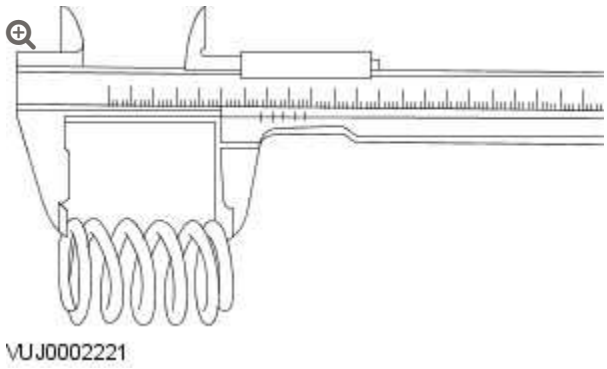

Using a vernier gauge, measure the free length of each valve spring. Verify the length is within specification.

ENGINE SYSTEM – GENERAL INFORMATION

VALVE STEM DIAMETER

(G61253)

GENERAL PROCEDURES

1.

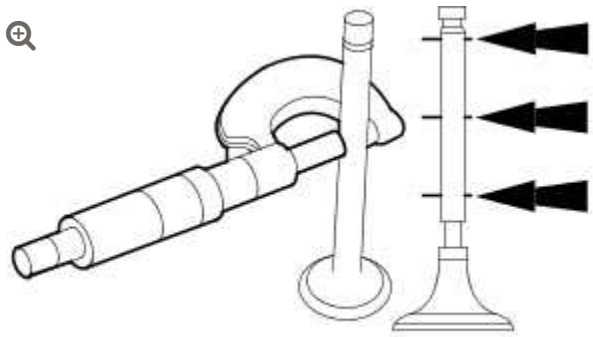

VUJ0002220

Using a micrometer measure the diameter of the valve stems.

- If the measurements are not to specification, install a new valve.

ENGINE – V8 S/C 5.0L PETROL

SPECIFICATIONS

Engine Data

ENGINE DESCRIPTION	ENGINE CAPACITY	MAXIMUM ENGINE TORQUE (EEC)	MAXIMUM ENGINE POWER (EEC)	COMPRESSION RATIO	BORE	STROK
• 90° "Vee" • 8 Cylinder • 32 Valves	4.999 ccm	625 Nm at 2.500 - 5.500 RPM	375 kW at 6.000 - 6.500 RPM	9.5 ± 0.50	92.5 mm	93 mm

Engine Firing Order

FIRING ORDER
1:2:7:3:4:5:6:8

Engine Valve Clearance (cold)

INTAKE VALVE	EXHAUST VALVE
0.20 ±0.02	0.25 ±0.02

Spark Plugs

SPECIFICATION	SPARK PLUG GAP
ILKR6C-10	1 mm

Lubricants, Fluids, Sealers and Adhesives

DESCRIPTION	SPECIFICATION
Engine Oil	WSS-M2C925-A
Sealant	WSE-M4G323-A6
Core plug and stub pipe retainer	WSK-M2G349-A7

Capacities

DESCRIPTION	LITERS
Engine oil, initial fill	9.65
Engine oil, service fill with oil filter change	8.0

Cylinder Head and Valve Train

ITEM	SPECIFICATION
Cylinder head maximum permitted warp (mm) (flatness specification)	0.2
Valve guide inner diameter (mm)	5.51 ± 0.01
Intake valve effective length (mm) (tip to gauge line)	117.21 ± 0.1
Exhaust valve effective length (mm) (tip to gauge line)	94.39 ± 0.1
Valve stem to guide clearance intake diametrical (mm)	0.022 - 0.057
Valve stem to guide clearance exhaust diametrical (mm)	0.03 - 0.065
Valve head diameter intake (mm)	36 ± 0.1
Valve head diameter exhaust (mm)	30 ± 0.1
Intake valve face angle (degrees)	44.875 ± 0.125
Exhaust valve face angle (degrees)	44.875 ± 0.125
Valve stem diameter intake (mm)	5.4705 ± 0.0075
Valve stem diameter exhaust (mm)	5.4625 ± 0.0075
Valve spring free length (mm) - inlet	46.1

ITEM	SPECIFICATION
Valve spring free length (mm) - exhaust	46.1
Valve spring installed height (mm) - inlet	35.74
Valve spring installed height (mm) - exhaust	35.1
Camshaft lobe lift intake (mm)	10
Camshaft lobe lift exhaust (mm)	9.36
Camshaft journal to cylinder head bearing surface clearance diametrical (mm)	0.025 - 0.065
Camshaft journal diameter - all positions	26.965 ± 0.01
Bearing diameter - all positions	27.01 ± 0.01
Camshaft journal maximum run out limit (mm)	
Camshaft journals to end journals	0.03
Camshaft journals to adjacent journals	0.015
Camshaft journal maximum out of round (mm) - all journals	0.005

Torque Specifications

NOTE:

A = Refer to procedure for correct torque sequence.

DESCRIPTION	NM	LB-FT	LB-IN
Engine cover mounting bolts	10	7	88
Accessory drive belt tensioner retaining bolt	40	30	354
Supercharger belt idler/tensioner bracket retaining bolts	25	18	221
Secondary drive belt idler retaining bolts	40	30	354
Power steering pump pulley retaining bolts	25	18	221
Power steering pump retaining bolts	25	18	221

DESCRIPTION	NM	LB-FT	LB-IN
Power steering pump bracket to engine retaining bolts	25	18	221
Generator retaining bolts	48	35	425
Starter motor retaining bolts	40	30	354
Air conditioning compressor retaining bolts	25	18	221
Engine mounting to engine mounting bracket retaining nuts	100	74	885
Engine mounting to subframe retaining bolts	56	41	496
Engine mounting bracket to engine retaining bolts	45 + 60°	33 + 60°	398 + 60°
Crankshaft damper pulley retaining LH threaded bolt	200 + 270°	148 + 180°	1770 + 270°
Flexplate retaining bolts	45 + 90°	33 + 90°	398 + 90°
Exhaust manifold heat shield retaining bolts	A	-	-
Exhaust manifold retaining bolts	A	-	-
Engine wiring harness bracket retaining bolts	10	7	88
Coolant outlet pipe	10	7	88
Intercooler retaining bolts	25	18	221
Oil Cooler retaining bolts	13	10	115
Knock sensor (KS) retaining bolt	20	14	177
Ignition coil retaining bolts	8	-	71
Spark plugs	20	15	177
Fuel rail retaining bolts	A	-	-
High pressure fuel pipe retaining bolts	A	-	-
High pressure fuel pump retaining bolts	12	9	106
Oil filter housing assembly retaining bolts	12	9	106
Oil filter cap	25	18	221
Lifting eye bolts			

DESCRIPTION	NM	LB-FT	LB-IN
	25 + 90°	18 + 90°	221 + 90°
Manifold absolute pressure and temperature (MAPT) sensor sensor retaining bolts	5	-	44
Coolant pump retaining bolts	12	9	106
Variable valve timing (VVT) oil control solenoid retaining bolts	10	7	88
Camshaft position (CMP) sensor retaining bolts	10	7	88
Camshaft cover retaining bolts	13	10	115
Front upper timing cover retaining bolts	12	9	106
Front lower timing cover retaining bolts	**A**	-	-
Engine rear cover retaining bolts	**A**	-	-
VVT to camshaft retaining bolts	32	24	283
Camshaft bearing caps retaining bolts	11	8	97
Primary timing chain fixed guide retaining bolts	12	9	106
Primary timing chain tensioner retaining bolts	12	9	106
Primary timing chain tensioner guide blade retaining bolts	25	18	221
Auxiliary chain tensioner guide retaining bolts	21	15	186
Auxiliary chain fixed guide retaining bolt	12	9	106
Oil pump sprocket retaining bolt	21	15	186
Cylinder head retaining bolts	**A**	-	-
Engine oil level (EOL) sensor retaining bolt	12	9	106
Crankshaft position (CKP) sensor retaining bolt	10	7	88
Oil sump body to engine retaining bolts	25	18	221
Oil pan drain plug	24	18	212
Oil transfer tube to Oil pan body retaining bolts	11	8	97

DESCRIPTION	NM	LB-FT	LB-IN
Oil pump to engine block retaining bolts	25	18	221
Pick-up pipe to oil pump retaining bolts	12	9	106
Windage tray retaining bolts	25	18	221
Piston cooling jet retaining bolts	12	9	106
Engine block coolant draining plug	50	37	442
Cooling fan pulley	25	18	221
Connecting Rod bolts			
Stage 1	10	7	88
Stage 2	50	37	442
Main bearing cap			
M10 bolt Stage 1	25	18	221
M10 bolt Stage 2	57 + 70°	42 + 70°	504 + 70°
M8 bolt Stage 1	15	11	133
M8 bolt Stage 2	33 + 75°	24 + 75°	292 + 75°

ENGINE – V8 S/C 5.0L PETROL

CAMSHAFT LH (G1224590)

REMOVAL AND INSTALLATION

12.13.21	CAMSHAFTS – LH BANK – RENEW	5000 CC, AJ V8, SUPERCHARGED	17.1	USED WITHINS	+

REMOVAL

CAUTION:

Make sure that the orientation and code on the top of the camshaft bearing caps is noted (along with the bank - A or B), so that on installation the components are installed to their original position. Failure to follow this instruction may cause damage to the vehicle.

NOTE:

Removal steps in this procedure may contain installation details.

1. Disconnect the battery ground cable.
   Refer to: Specifications (414-00, Specifications).

2. **WARNING:**

> Make sure to support the vehicle with axle stands.

Raise and support the vehicle.

3. Refer to: Timing Drive Components (303-01, Removal and Installation).

4. **CAUTIONS:**

> - Rotate the camshafts until all the valves are at their minimum open point.
> - Evenly and progressively, release the camshaft bearing caps.

NOTE:

> Remove the camshaft bearing caps. Note: their position, orientation and markings. Each is marked with its position (number) and an orientation (arrow).

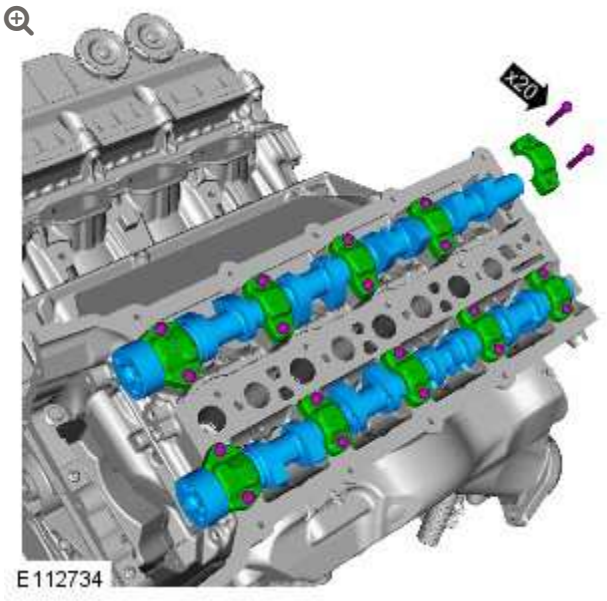

INSTALLATION

1.

CAUTIONS:

- Prior to installing the camshafts, position the crankshaft 45 degrees ATDC cylinder 1A to prevent valve/piston collision.
- Make sure that the camshafts and camshaft bearing caps are installed in their original locations.
- Evenly and progressively install and tighten the camshaft bearing caps.

NOTE:

Lubricate the camshafts and the camshaft bearing caps with EP90 oil (or 75/90 viscosity oil will suffice) prior to installation.

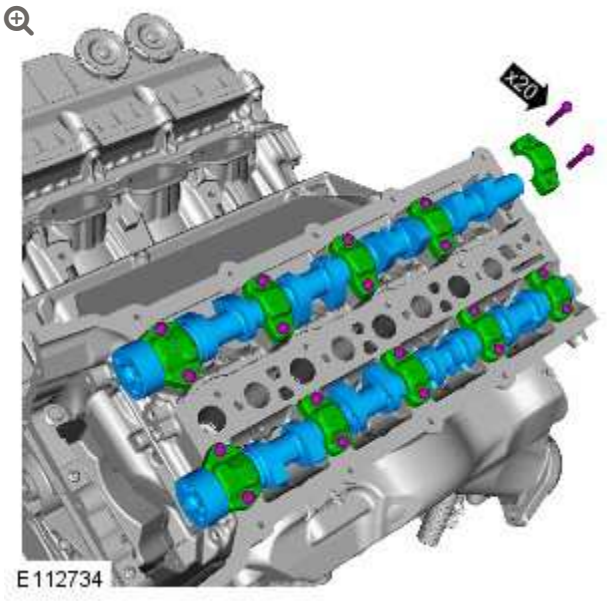

Torque: **3 Nm**

2.

NOTE:

Tighten the bolts in the indicated sequence.

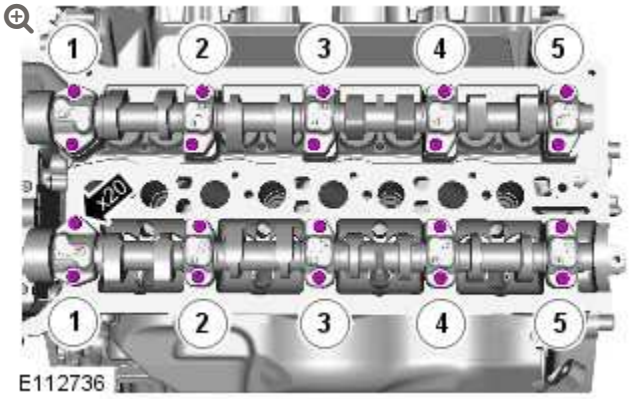

Torque: **12 Nm**

3.

CAUTION:

Only rotate the crankshaft clockwise.

Rotate the crankshaft untill the camshaft lobe on the valve being checked is 180 degrees from the maximum opening position.

4. **NOTE:**

> If the valve clearance is incorrect, continue to the next step. If the valve clearance is correct, continue to step 8.

Using feeler gauge check the gap between the tappet and the camshaft lobe and check against specifications table.

5. **CAUTIONS:**

> - Do not use a magnet to remove the tappet.
> - Use the following formula to calculate the required bucket thickness. Original thickness + measured clearance - desired clearance = required bucket thickness.

Remove the tappet and measure the thickness.

6. **NOTE:**

> If a new tappet is installed then go back to step 1 of the install procedure.

Install a new tappet if required.

7. Using feeler gauge check the gap between the tappet and the camshaft lobe and check against specifications table.

8. Refer to: Timing Drive Components (303-01, Removal and Installation).

9. Connect the battery ground cable.
   Refer to: Specifications (414-00, Specifications).

ENGINE – V8 S/C 5.0L PETROL

CAMSHAFT RH (G1224591)

REMOVAL AND INSTALLATION

12.13.20	CAMSHAFTS – RH BANK – RENEW	5000 CC, AJ V8, SUPERCHARGED	17.1	USED WITHINS	+

REMOVAL

CAUTION:

Make sure that the orientation and code on the top of the camshaft bearing caps is noted (along with the bank - A or B), so that on installation the components are installed to their original position. Failure to follow this instruction may cause damage to the vehicle.

NOTES:

- Removal steps in this procedure may contain installation details.
- Some variation in the illustrations may occur, but the essential information is always correct.

1. Refer to: Specifications (414-00, Specifications).

2. **WARNING:**

   Make sure to support the vehicle with axle stands.

   Raise and support the vehicle.

3. Refer to: Timing Drive Components (303-01, Removal and Installation).

4. **CAUTIONS:**

   - Rotate the camshafts until all the valves are at their minimum open point.
   - Evenly and progressively, release the camshaft bearing caps.

   NOTE:

   Remove the camshaft bearing caps. Note: their position, orientation and markings. Each is marked with its position (number) and an orientation (arrow).

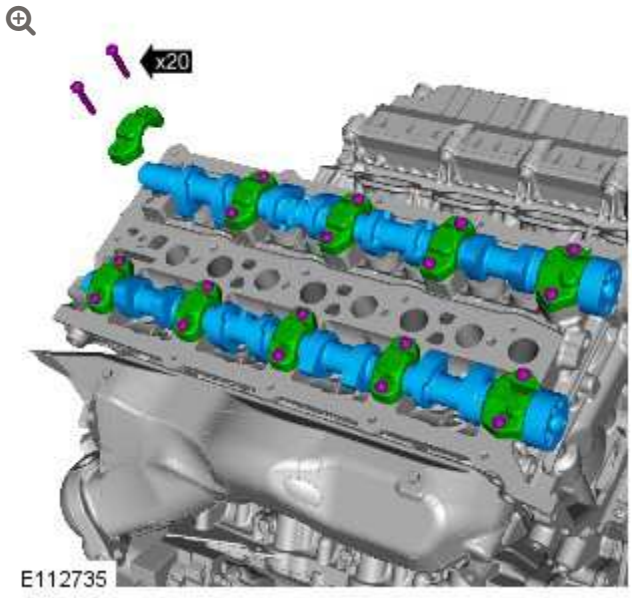

INSTALLATION

1.

CAUTIONS:

- Prior to installing the camshafts, position the crankshaft 45 degrees ATDC cylinder 1A to prevent valve/piston collision.
- Evenly and progressively install and tighten the camshaft bearing caps.
- Make sure that the camshafts and camshaft bearing caps are installed in their original locations.

NOTE:

Lubricate the camshafts and the camshaft bearing caps with EP90 oil (or 75/90 viscosity oil will suffice) prior to installation.

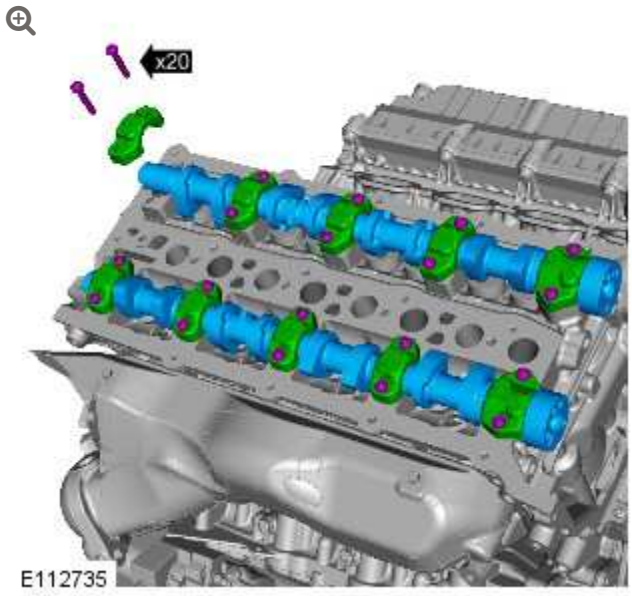

Torque: **3 Nm**

2. **NOTE:**

Tighten the bolts in the indicated sequence.

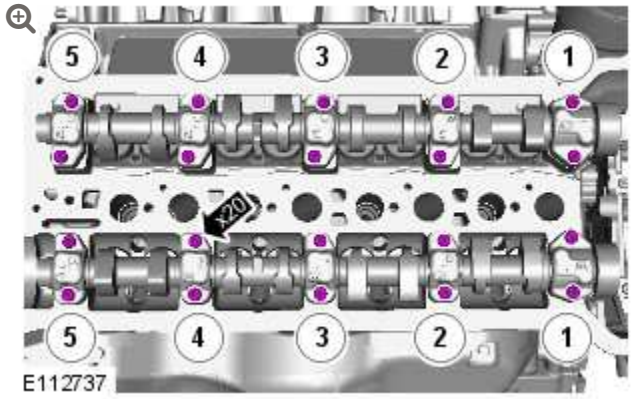

Torque: **12 Nm**

3. **CAUTION:**

Only rotate the crankshaft clockwise.

Rotate the crankshaft untill the camshaft lobe on the valve being checked is 180 degrees from the maximum opening position.

4. **NOTE:**

> If the valve clearance is incorrect, continue to the next step. If the valve clearance is correct, continue to step 8.

Using feeler gauge check the gap between the tappet and the camshaft lobe and check against specifications table.

5. **CAUTIONS:**

> - Use the following formula to calculate the required bucket thickness. Original thickness + measured clearance - desired clearance = required bucket thickness.
> - Do not use a magnet to remove the tappet.

Remove the tappet and measure the thickness.

6. **NOTE:**

> If a new tappet is installed then go back to step 1 of the install procedure.

Install a new tappet if required.

7. Using feeler gauge check the gap between the tappet and the camshaft lobe and check against specifications table.

8. Refer to: Timing Drive Components (303-01, Removal and Installation).

9. Refer to: Specifications (414-00, Specifications).

ENGINE – V8 S/C 5.0L PETROL

CRANKSHAFT FRONT SEAL (G1224592)

REMOVAL AND INSTALLATION

12.21.14	OIL SEAL – CRANKSHAFT – FRONT – RENEW	5000 CC, AJ V8, SUPERCHARGED	4.9	USED WITHINS	+

SPECIAL TOOL(S)



303-1434

Remover/Installer, Front Crankshaft Seal

REMOVAL

NOTE:

Removal steps in this procedure may contain installation details.

Some variation in the illustrations may occur, but the essential information is always correct.

1. Disconnect the battery ground cable.
   Refer to: Specifications (414-00 Battery and Charging System - General Information, Specifications).

2. Refer to: Crankshaft Pulley (303-01B Engine - V8 S/C 5.0L Petrol, Removal and Installation).

3. 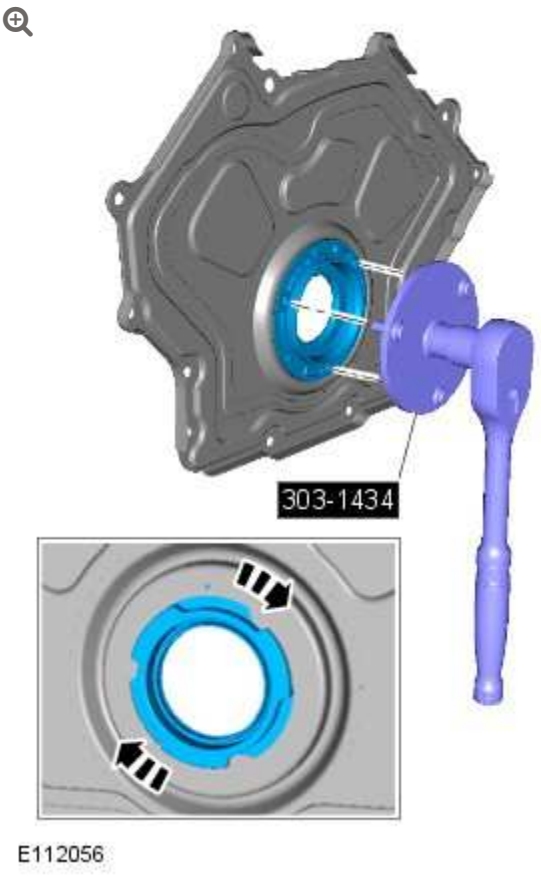

E112056

Special Tool(s): 303-1434

Torque: **26 Nm**

INSTALLATION

1. **CAUTIONS:**

   - Do not over tighten the crankshaft front seal. Failure to follow this instruction may result in damage to the vehicle.
   - Take extra care not to damage the seal.

   To install, reverse the removal procedure.

ENGINE – V8 S/C 5.0L PETROL

CRANKSHAFT PULLEY

(G1271888)

REMOVAL AND INSTALLATION

12.21.01	PULLEY - CRANKSHAFT - RENEW	5000 CC, AJ V8, SUPERCHARGED	4.9	USED WITHINS	+

SPECIAL TOOL(S)



303-1437

Crankshaft Damper Remover/Installer



E115257

303-1438

Crankshaft Damper Bolt Remover/Installer



E115258

303-1439

Crankshaft Damper Removal Plate



E115259

303-1440

Crankshaft Damper Removal/Installation Stud



E115260

303-1441

Crankshaft Damper Remover/Installer Body



303-1448

Locking Tool



JLR-303-1304

Locking Tool

REMOVAL

NOTES:

- Removal steps in this procedure may contain installation details.
- Some illustrations may show the engine removed for clarity.
- Some variation in the illustrations may occur, but the essential information is always correct.

1. Refer to: Specifications (414-01 Battery, Mounting and Cables, Specifications).

2. **WARNING:**

> Make sure to support the vehicle with axle stands.

Raise and support the vehicle.

3. Remove the Radiator.
Refer to: Radiator - V8 S/C 5.0L Petrol (303-03A Engine Cooling - V8 5.0L Petrol/V8 S/C 5.0L Petrol, Removal and Installation).

4. Remove the Starter Motor.
Refer to: Starter Motor (303-06 Starting System - V8 5.0L Petrol/V8 S/C 5.0L Petrol, Removal and Installation).

5. 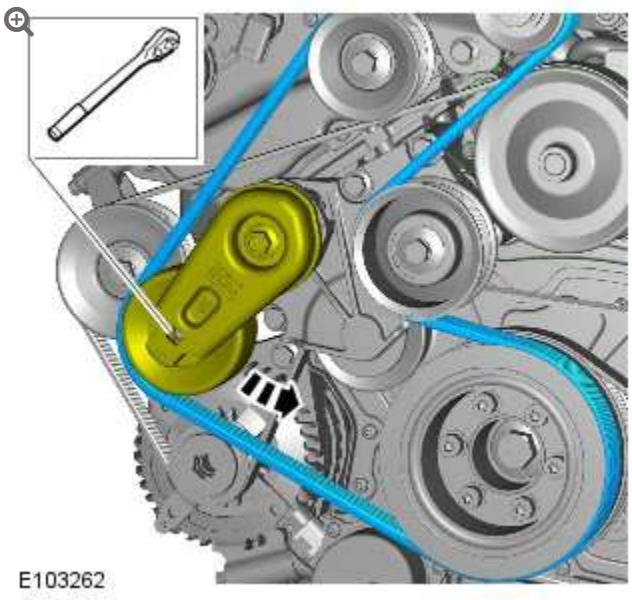

6.

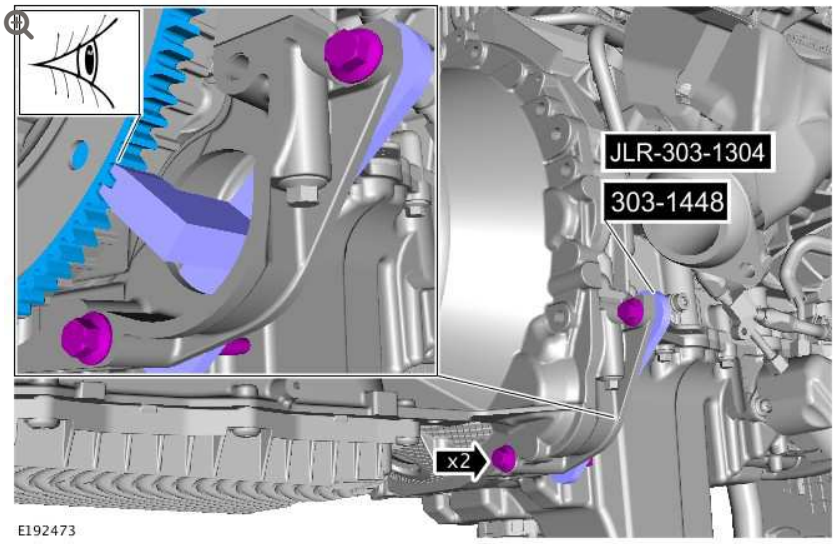

- Install the special tool.
- Vehicles without Auto stop/start system.
  Special Tool(s): 303-1448
- Vehicles with Auto stop/start system.
  Special Tool(s): JLR-303-1304

7.

CAUTION:

Before removing the crankshaft pulley bolt, note the numbers on the bolt head. If the bolt head shows 10.9, the bolt must be removed counter clockwise. If the bolt head shows 12.9, the bolt must be removed clockwise. Failure to follow this instruction may result in damage to the crankshaft.

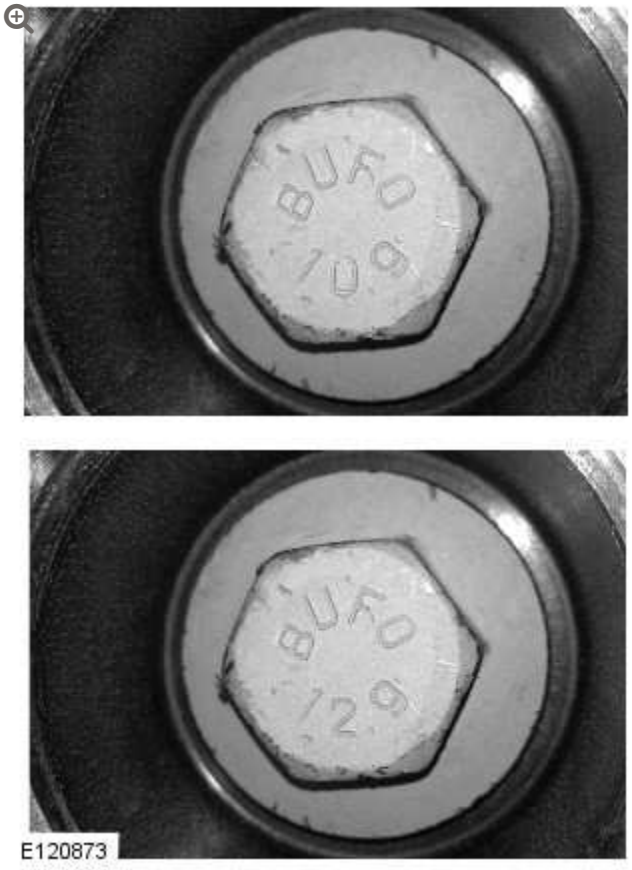

Note the markings on the crankshaft pulley bolt.

8.

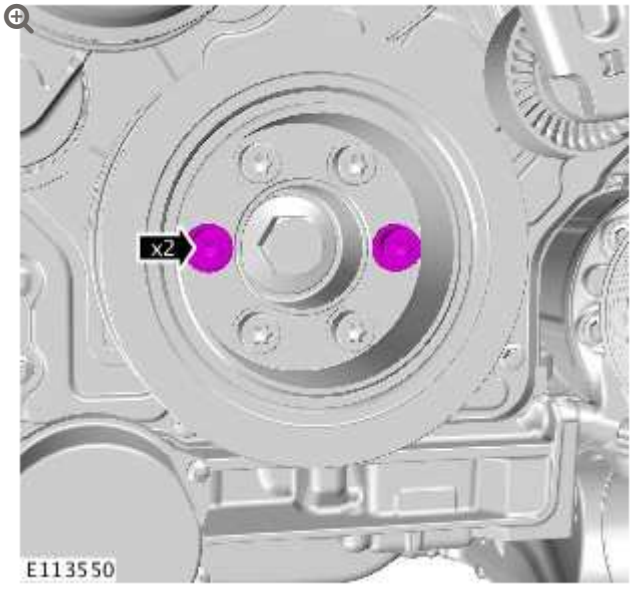

9.

NOTE:

The illustration shows the tool positioning for LH threaded crankshaft damper bolts, RH threaded crankshaft bolts will require the tool position to be the opposite direction.

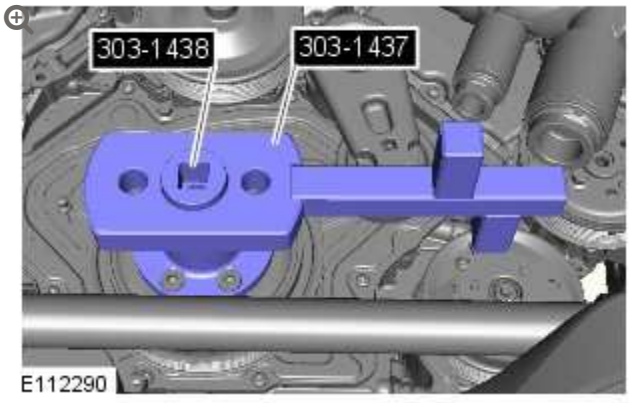

- Install the special tools.
- *Special Tool(s):* 303-1438
- *Special Tool(s):* 303-1437

10.

NOTE:

The illustration shows the tool positioning for LH threaded crankshaft damper bolts, RH threaded crankshaft bolts will require the tool position to be the opposite direction.

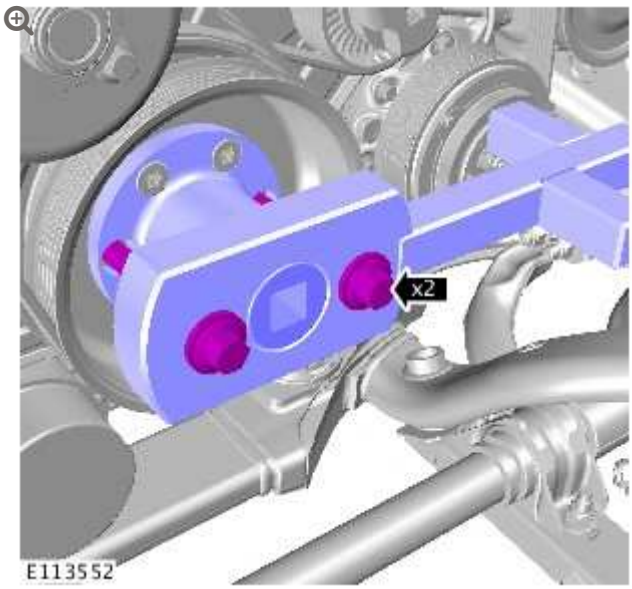

Torque: **25 Nm**

11.

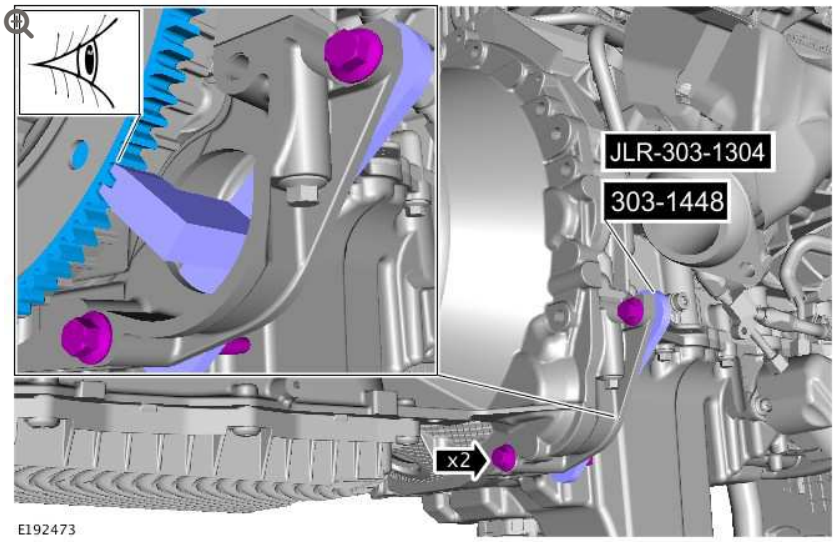

- Remove the special tool.
- Vehicles without Auto stop/start system.
  Special Tool(s): 303-1448
- Vehicles with Auto stop/start system.
  Special Tool(s): JLR-303-1304

12.

NOTE:

The illustration shows the tool positioning for LH threaded crankshaft damper bolts, RH threaded crankshaft bolts will require the tool position to be the opposite direction.

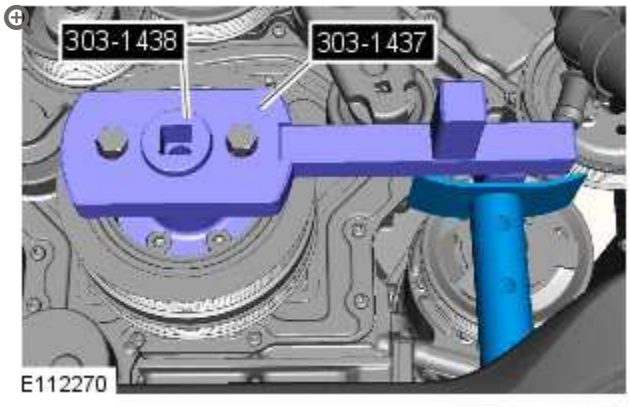

Using a suitable stand, support the special tool.

13.

CAUTION:

Discard the bolt.

NOTES:

- The illustration shows the tool positioning for LH threaded crankshaft damper bolts, RH threaded crankshaft bolts will require the tool position to be the opposite direction.
- The crankshaft pulley bolt will be very tight.

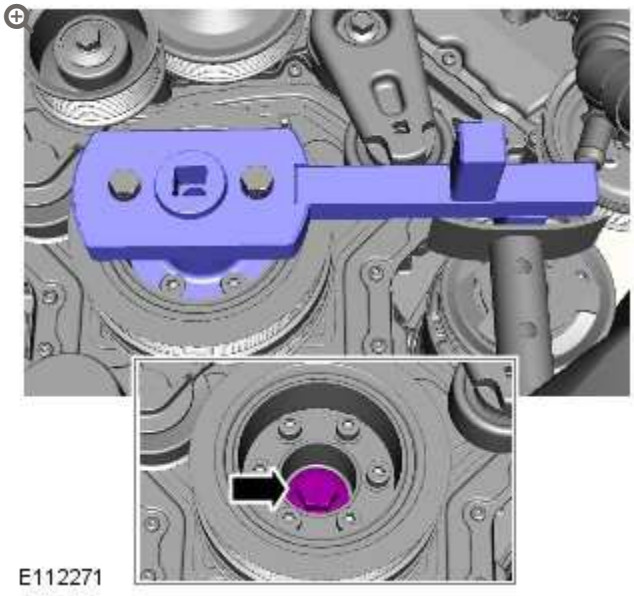

Remove the crankshaft damper bolt, make sure the bolt thread direction has been noted as described in step 7.

14.

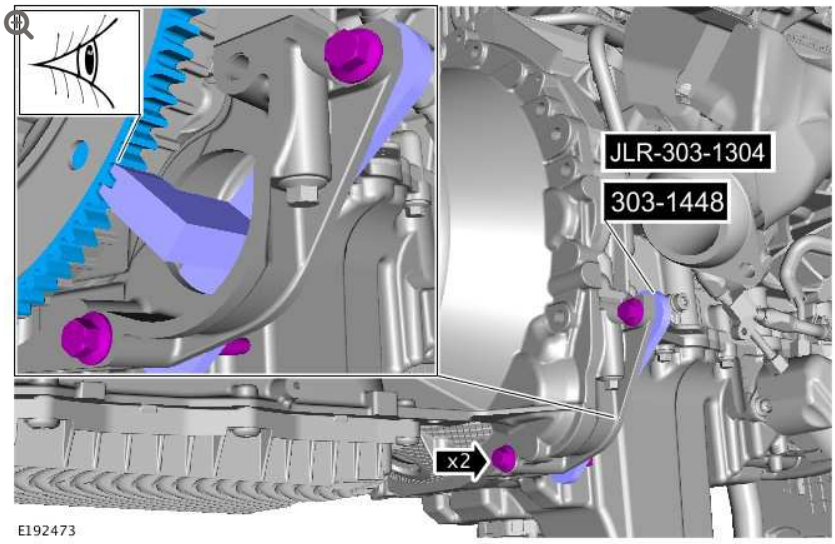

- Install the special tool.
- Vehicles without Auto stop/start system.
  Special Tool(s): 303-1448
- Vehicles with Auto stop/start system.
  Special Tool(s): JLR-303-1304

15.

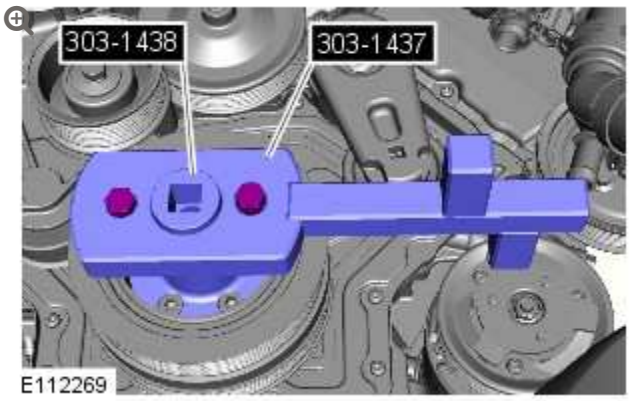

Remove the special tool.

16.

NOTE:

Discard the bolt after removal.

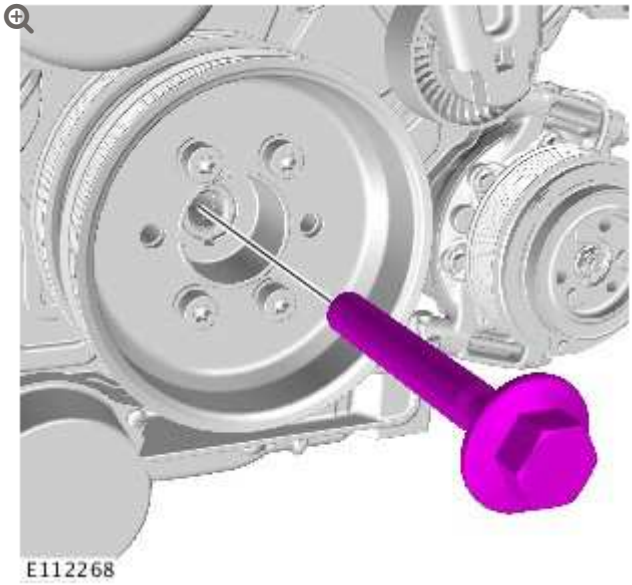

Remove the crankshaft damper bolt.

17.

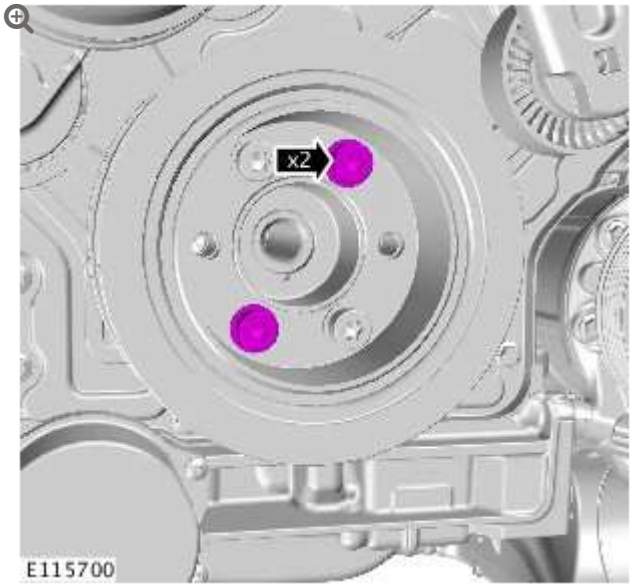

18.

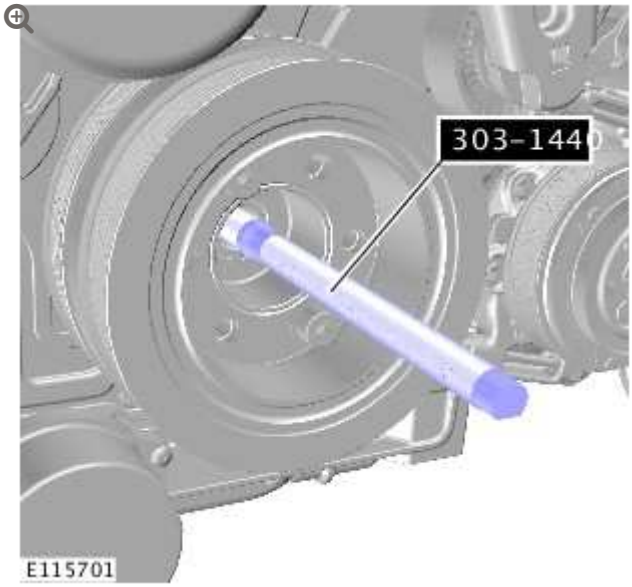

- Install the special tool.
- *Special Tool(s):* 303-1440

19.

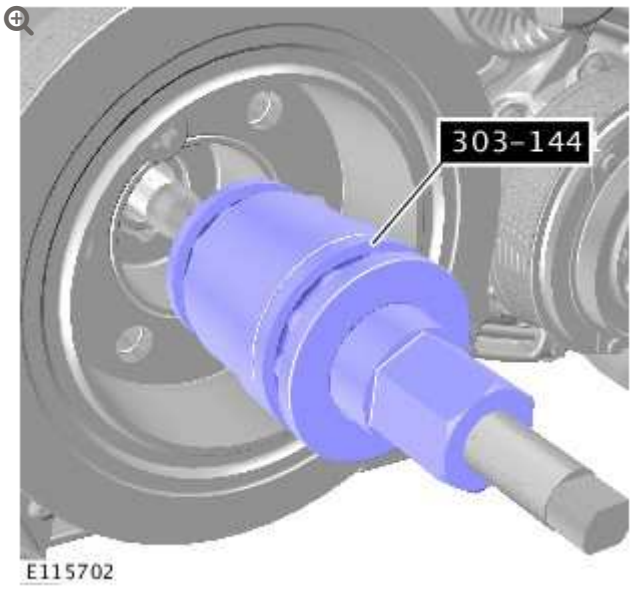

- Install the special tool.
- *Special Tool(s):* 303-1441

20.

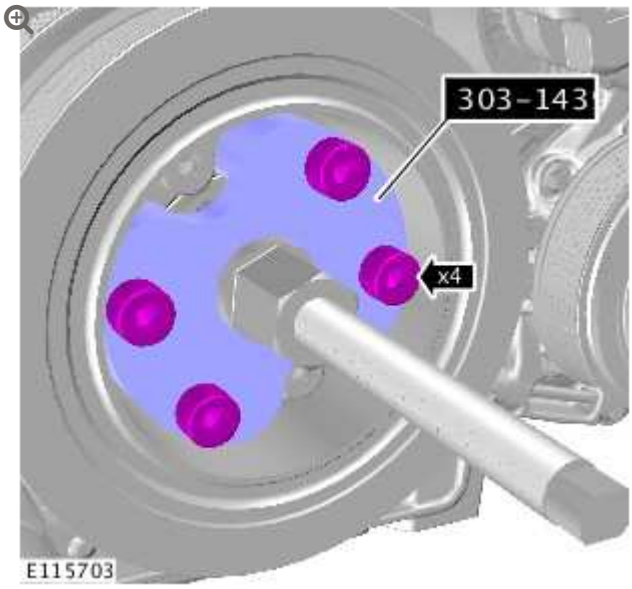

- Install the special tool.
- *Special Tool(s):* 303-1439

21.

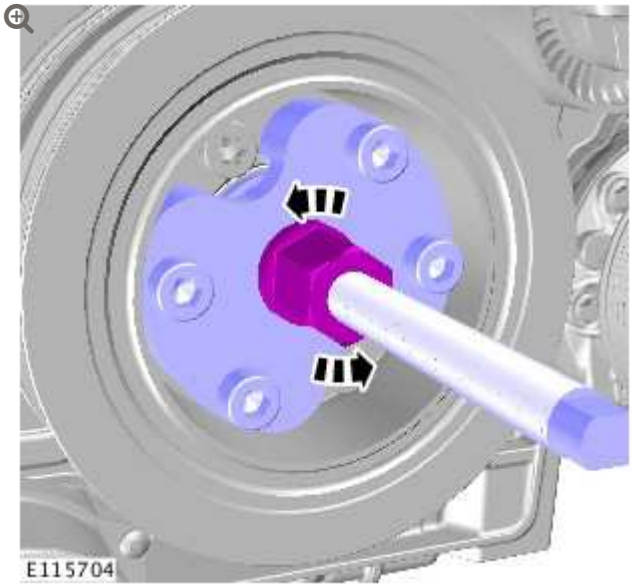

22.

CAUTION:

Discard the friction washer after removing the crankshaft pulley.

NOTE:

Make sure to clean the threads in the end of the crankshaft and that the crank nose is free of any foreign materials.

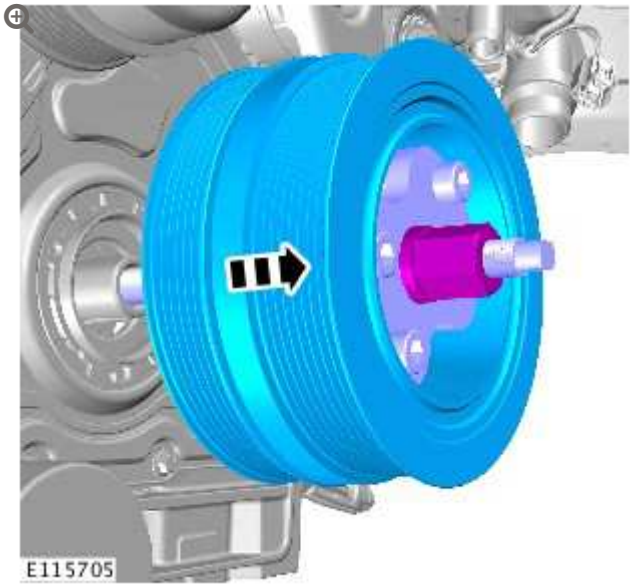

23.

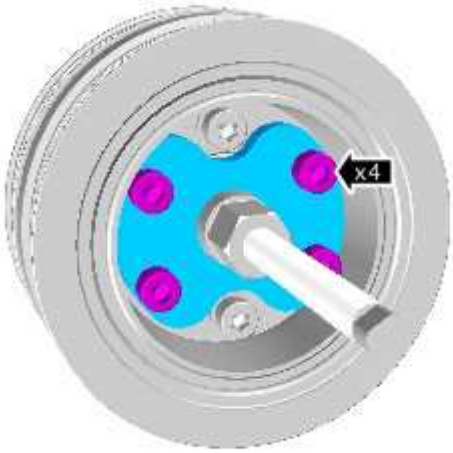

E115706

24.

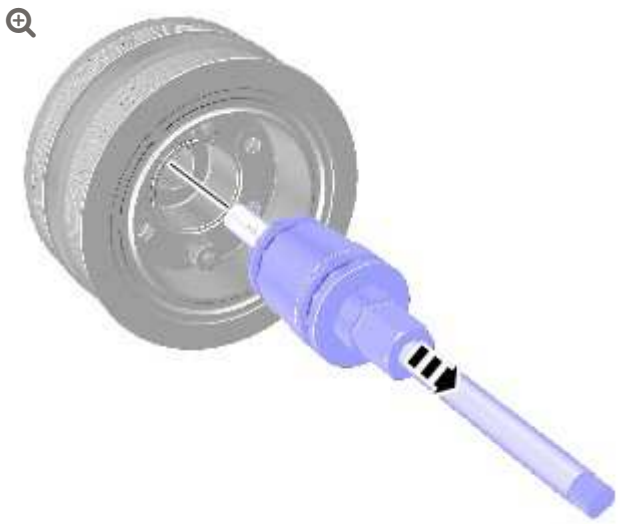

E115707

INSTALLATION

1.

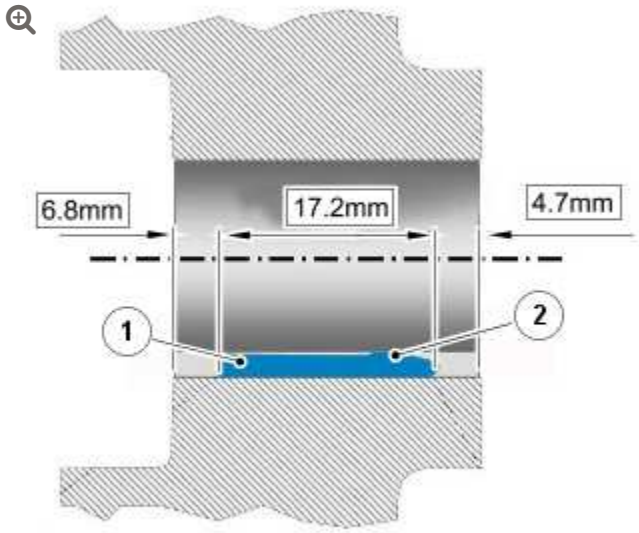

E115889

1. Apply RTV sealant to the crankshaft pulley keyway.
2. Make sure that the RTV sealant is applied in a 2mm diameter bead.
3. Make sure that when the RTV sealant is applied that the RTV sealant is level with the top of the keyway.

2.

CAUTION:

Install a new friction washer before installing the crankshaft pulley.

NOTES:

- Make sure to clean the threads in the end of the crankshaft and that the crank nose is free of any foreign materials.
- Skip to step 11 for engines fitted with early RH thread crankshaft bolt.

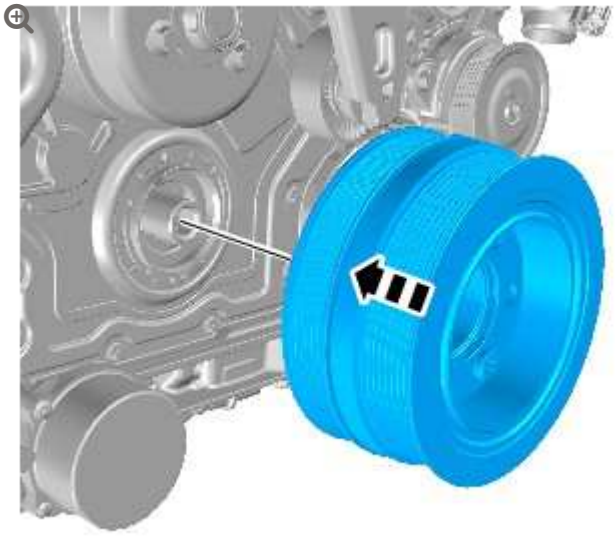

E112288

3.

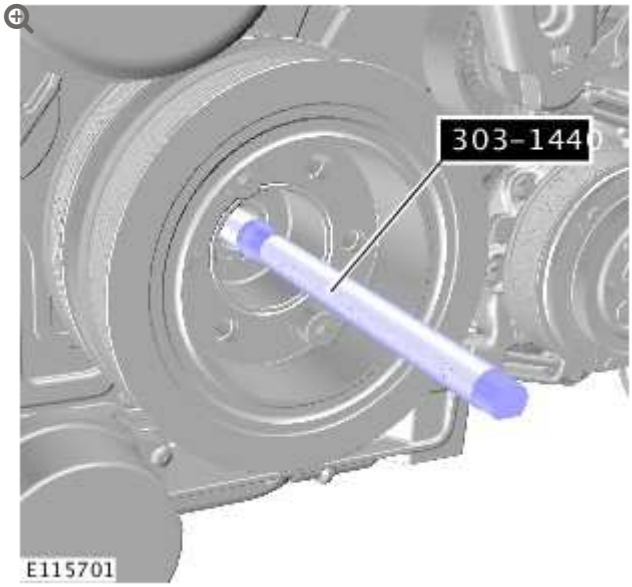

Install the special tool.

4.

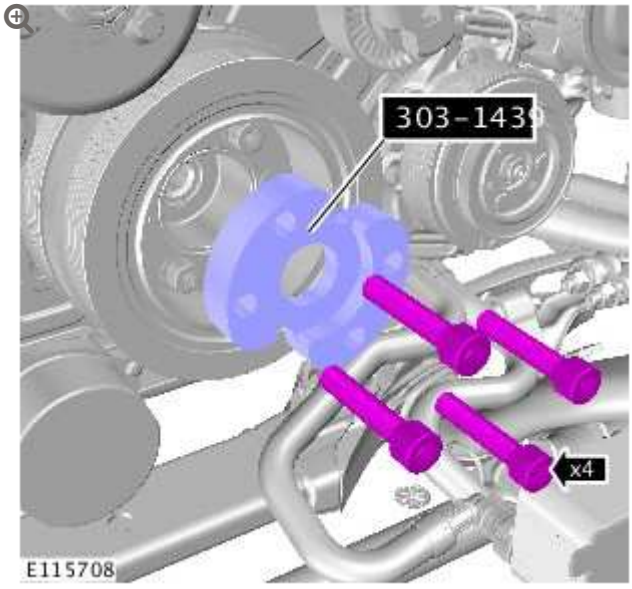

Install the special tool.

5.

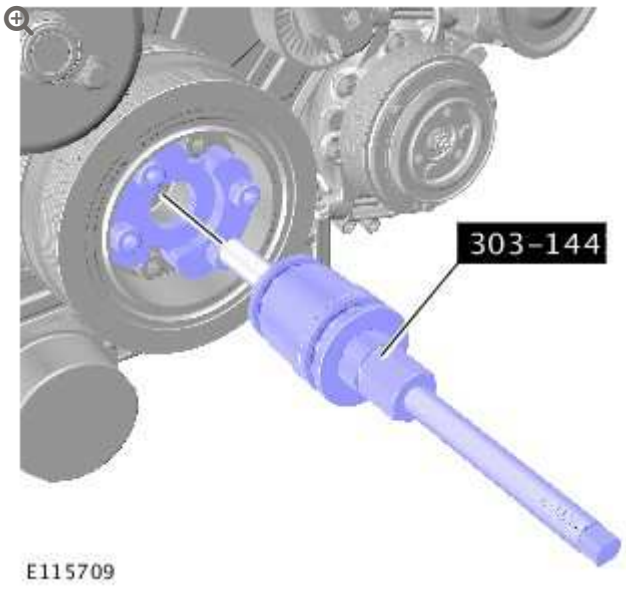

Install the special tool.

6.

CAUTION:

Rotate the crankshaft pulley installation tool until the pulley is fully located, do not over tighten. Failure to do this may result in damage to the components.

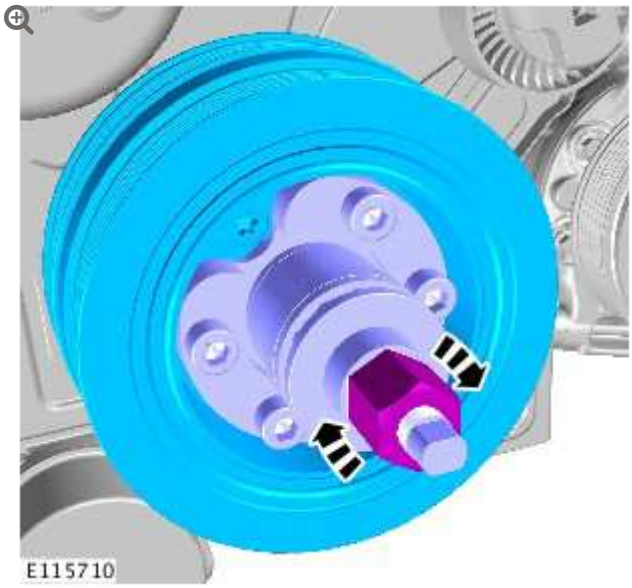

7.

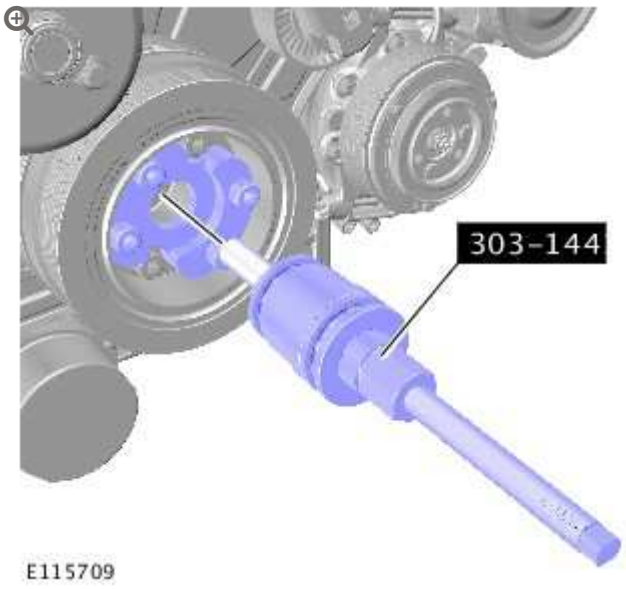

Remove the special tool.

8.

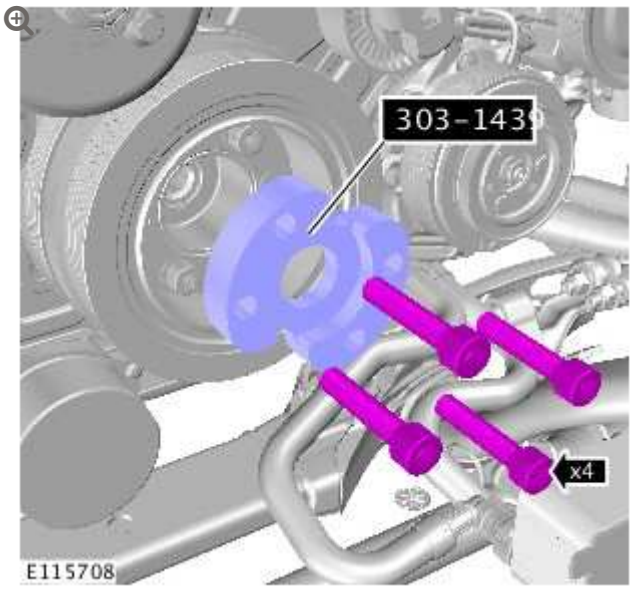

- Remove the special tool.

9.

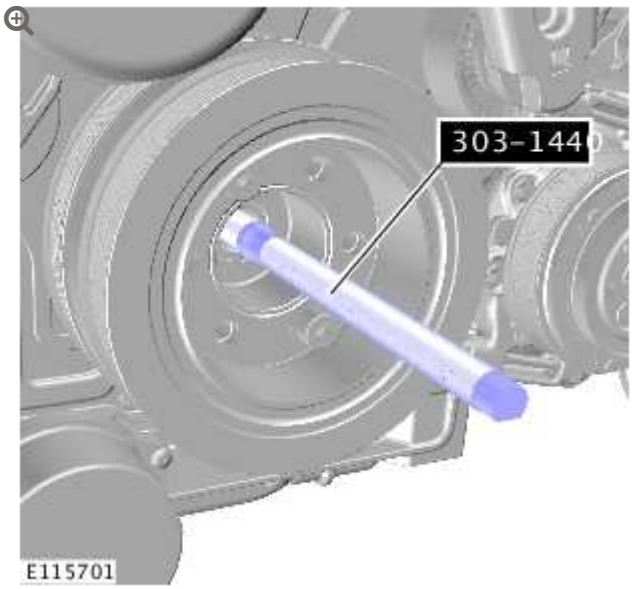

Remove the special tool.

10.

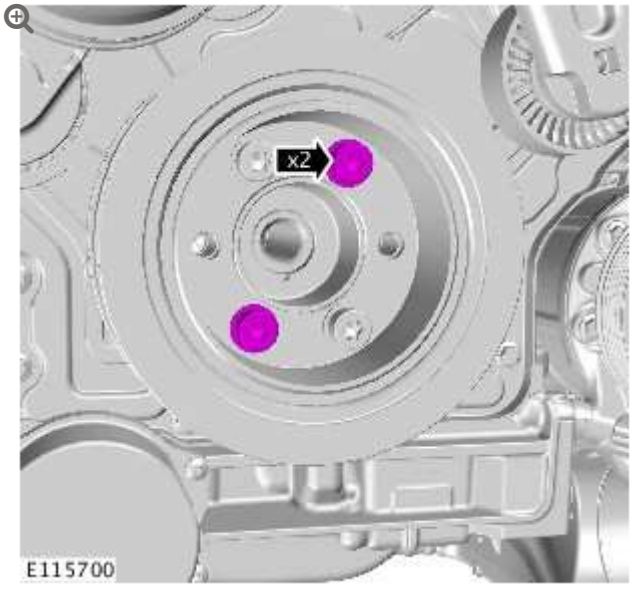

- **NOTE:**

  The original M10 bolts can be reused.

  Clean the original crankshaft pulley bolts and apply Loctite 270 to the threads before installation.

- *Torque:* **65 Nm**

11.

WARNING:

Make sure that a new bolt is installed.

CAUTION:

Tighten the component finger tight first.

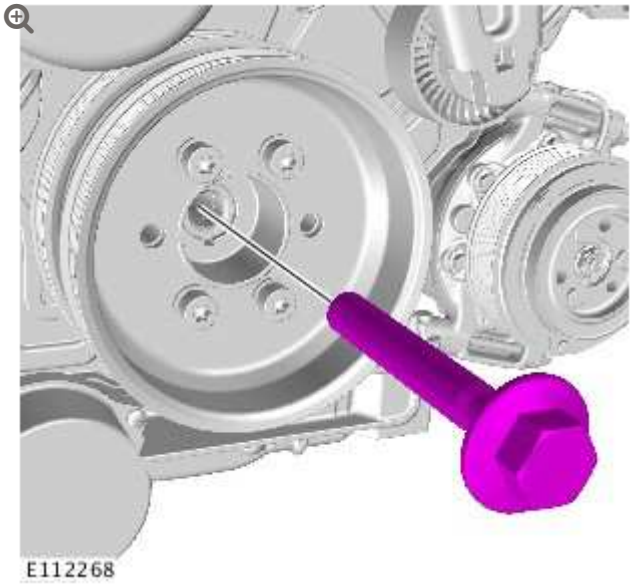

Install a new crankshaft damper bolt.

12.

NOTE:

The illustration shows the tool positioning for LH threaded crankshaft damper bolts, RH threaded crankshaft bolts will require the tool position to be the opposite direction.

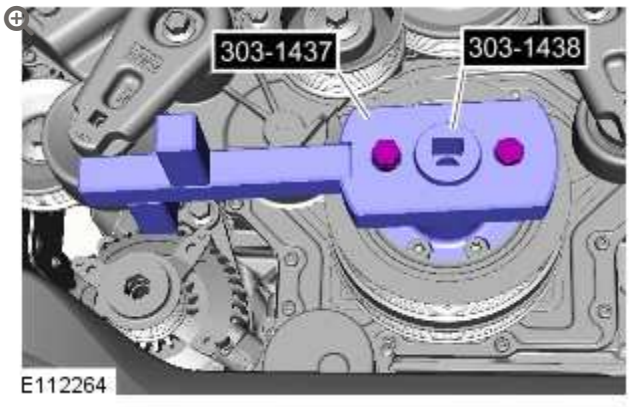

Torque: **25 Nm**

13.

NOTE:

The illustration shows the tool positioning for LH threaded crankshaft damper bolts, RH threaded crankshaft bolts will require the tool position to be the opposite direction.

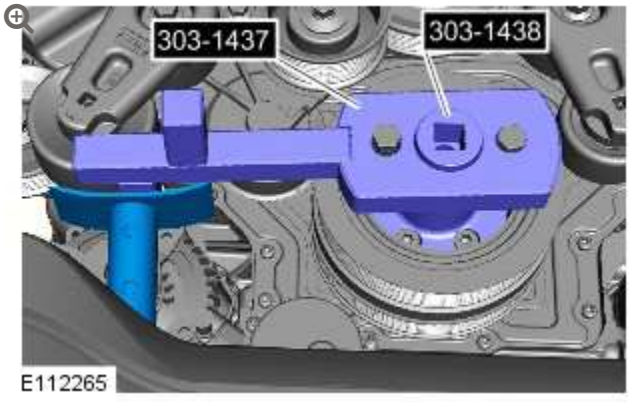

Using a suitable stand, support the special tool.

14.

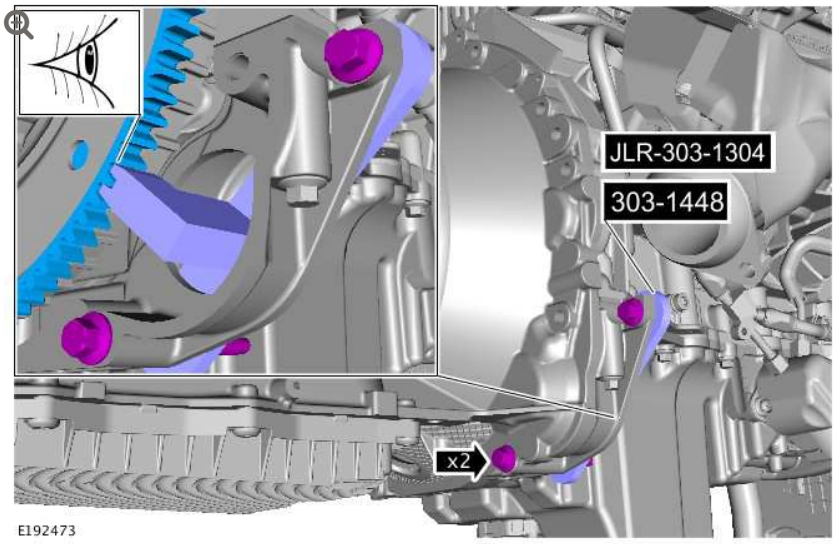

- Remove the special tool.
- Vehicles without Auto stop/start system.
  Special Tool(s): 303-1448
- Vehicles with Auto stop/start system.
  Special Tool(s): JLR-303-1304

15.

NOTES:

- The use of a torque multiplier capable of 600Nm will be required.
- The illustration shows the tool positioning for LH threaded crankshaft damper bolts, RH threaded crankshaft bolts will require the tool position to be the opposite direction.

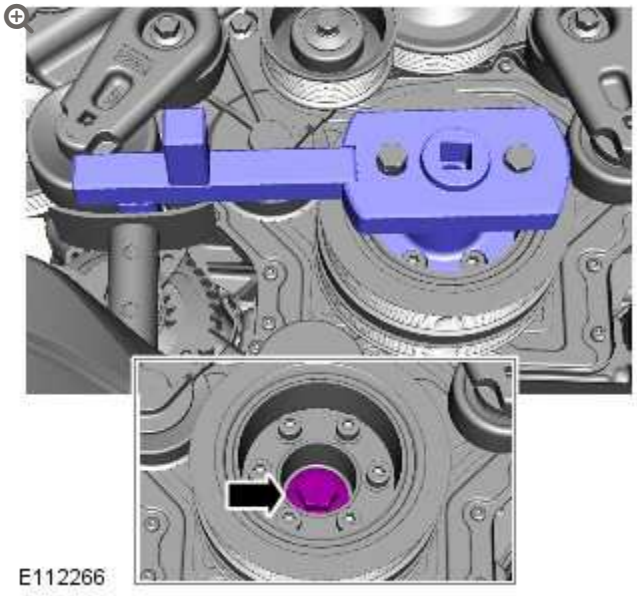

Tighten the crankshaft pulley bolt. Make sure that the socket is turned through 270 degrees not the torque wrench.

Torque:

Stage 1: **200 Nm**

Stage 2: **270°**

16.

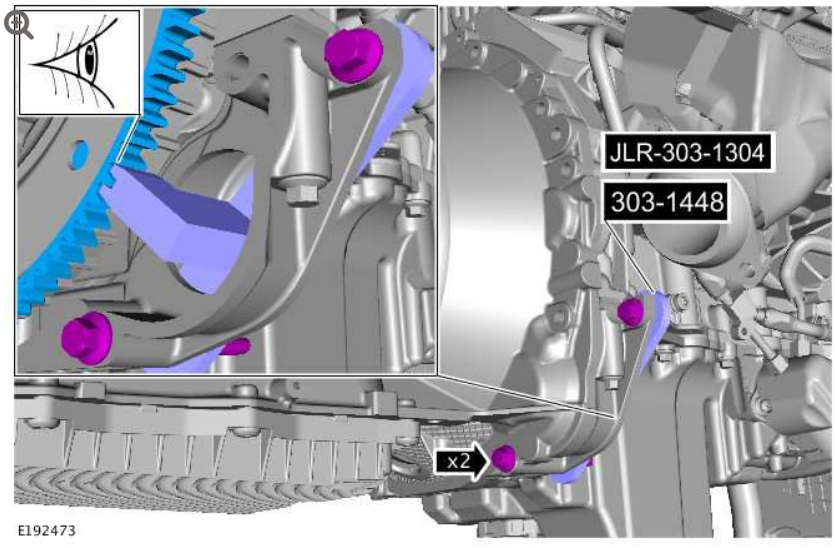

- Install the special tool.
- Vehicles without Auto stop/start system.
  Special Tool(s): 303-1448
- Vehicles with Auto stop/start system.

Special Tool(s): JLR-303-1304

17.

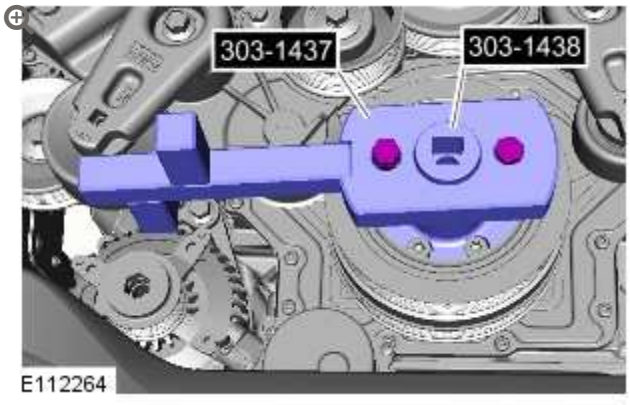

Remove the special tool and stand.

18.

NOTE:

The original M10 bolts can be reused.

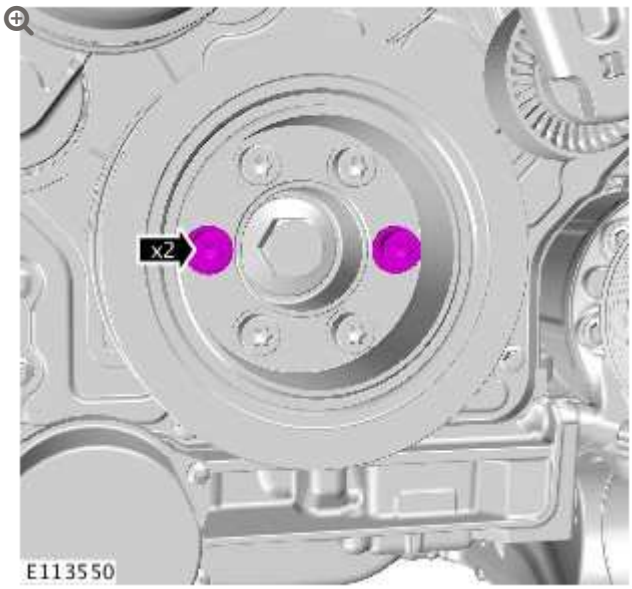

- Clean the original crankshaft pulley bolts and apply Loctite 270 to the threads before installation.
- *Torque:* **65 Nm**

19.

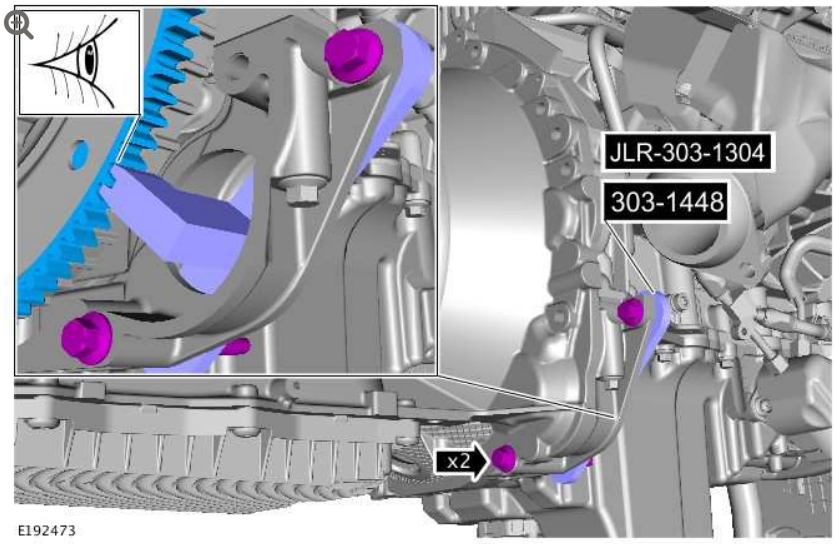

- Remove the special tool.
- Vehicles without Auto stop/start system.
  Special Tool(s): 303-1448
- Vehicles with Auto stop/start system.
  Special Tool(s): JLR-303-1304

20.

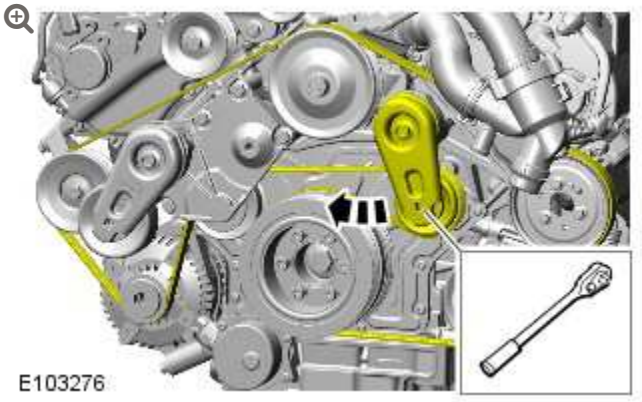

21.

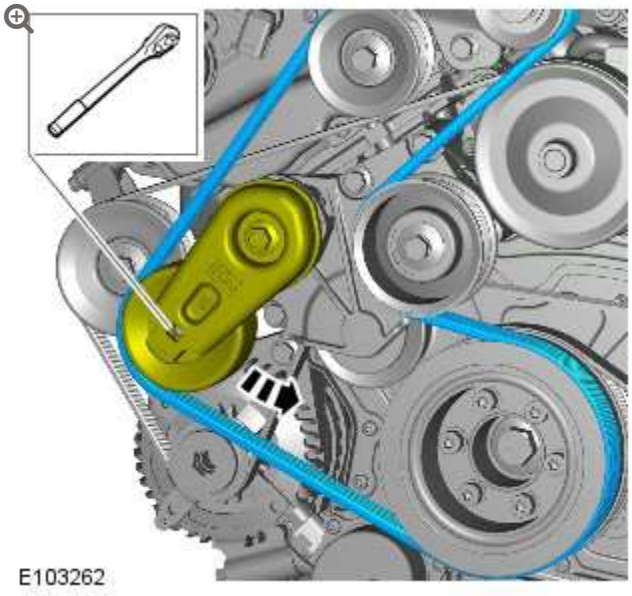

22. Install the Sarter Motor.
    Refer to: Starter Motor (303-06 Starting System - V8 5.0L Petrol/V8 S/C 5.0L Petrol, Removal and Installation).

23. Install the Radiator.
    Refer to: Radiator - V8 S/C 5.0L Petrol (303-03A Engine Cooling - V8 5.0L Petrol/V8 S/C 5.0L Petrol, Removal and Installation).

24. Connect the battery ground cable.
    Refer to: Specifications (414-01 Battery, Mounting and Cables, Specifications).

ENGINE – V8 S/C 5.0L PETROL

CRANKSHAFT REAR SEAL

(G1224594)

REMOVAL AND INSTALLATION

12.21.20	OIL SEAL - CRANKSHAFT - REAR - RENEW	5000 CC, AJ V8, SUPERCHARGED	9.7	USED WITHINS	+

SPECIAL TOOL(S)



303-1442

Rear Crankshaft Seal Installer

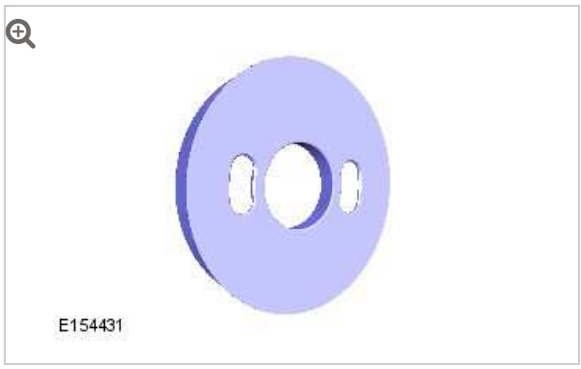

JLR-303-1622

Alignment Tool, Engine Rear Oil Seal

REMOVAL

NOTE:

Removal steps in this procedure may contain installation details.

1. Refer to: Flexplate (303-01B Engine - V8 S/C 5.0L Petrol, Removal and Installation).

2.



INSTALLATION

1. **CAUTIONS:**

- Use only a plastic scraper when removing the sealing material.
- Make sure that the mating faces are clean and free of foreign material.
- Make sure that the Land Rover approved cleaning fluid (Loctite 7063) is used to clean the mating faces.

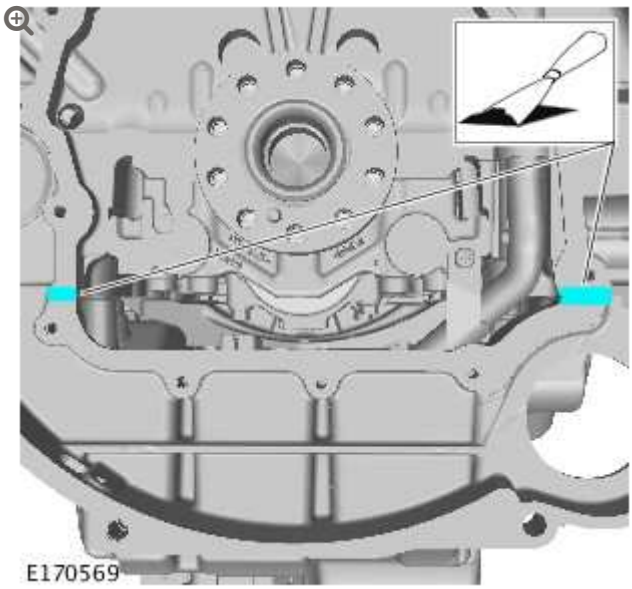

2.

CAUTION:

Make sure that the Land Rover approved sealant, covers the mating faces of the cylinder block and the oil pan.

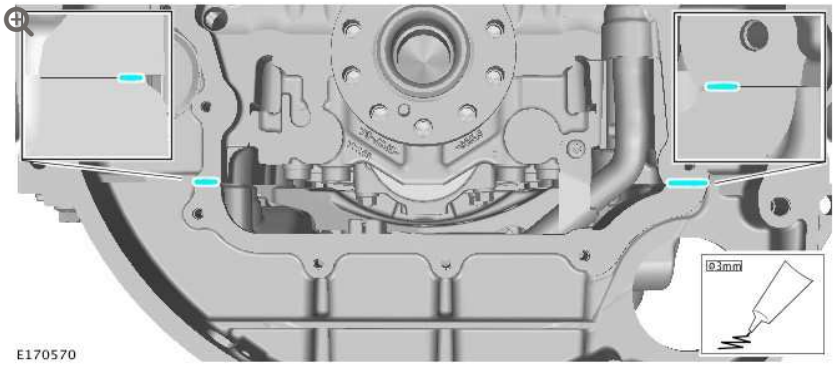

Apply RTV sealant (Loctite 5901G) in a 2-3mm diameter to the areas shown, and install the engine rear oil seal plate within 7 minutes.

3.

CAUTION:

Make sure that the special tool is correctly located.

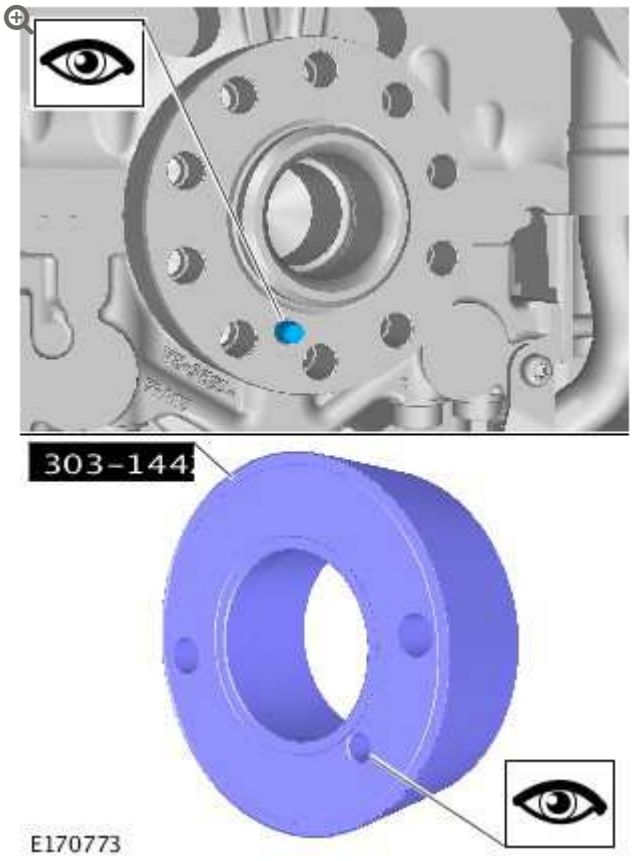

Special Tool(s): 303-1442

4.

NOTE:

Install the bolts finger tight.

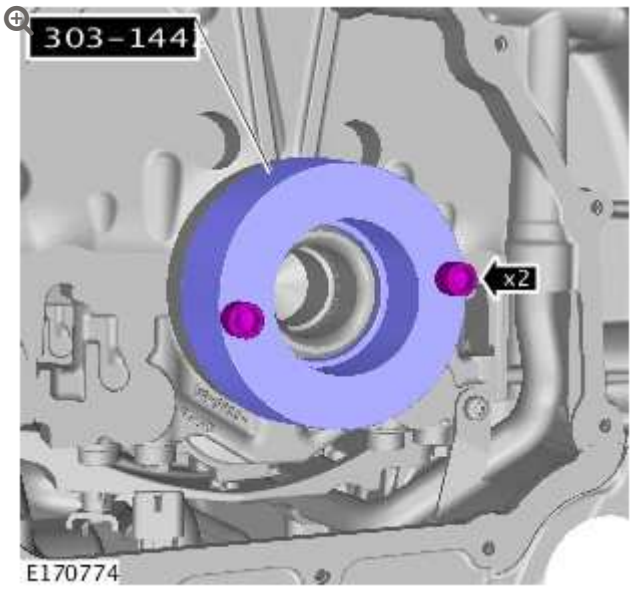

Install the special tool.

Special Tool(s): 303-1442

5.

CAUTION:

Do not fully install the component. Maintain a clearance of 8mm, between the rear oil seal plate and the cylinder block, as smearing of the sealant may occur.

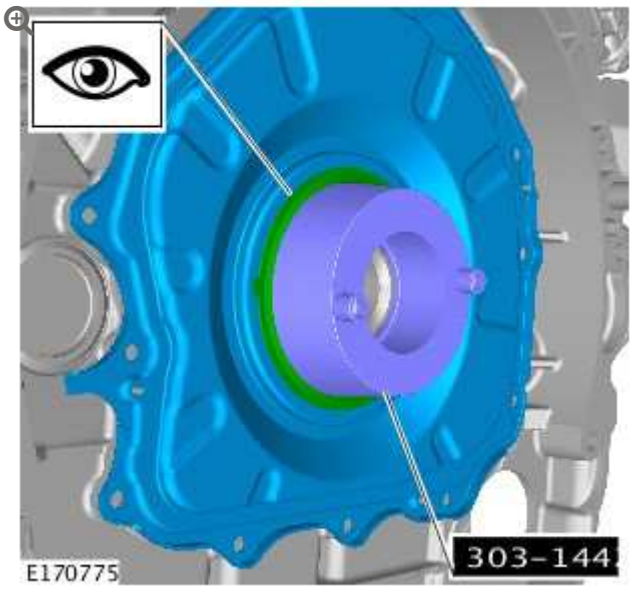

Special Tool(s): 303-1442

6.

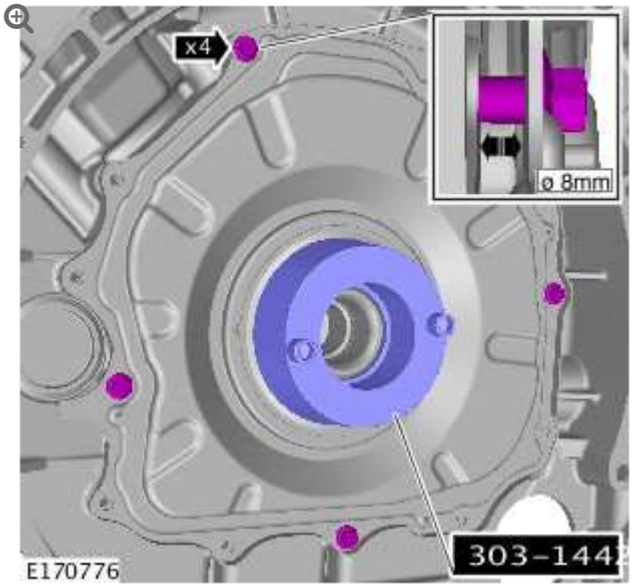

Install the bolts and maintain the clearance of 8mm.

Special Tool(s): 303-1442

7.

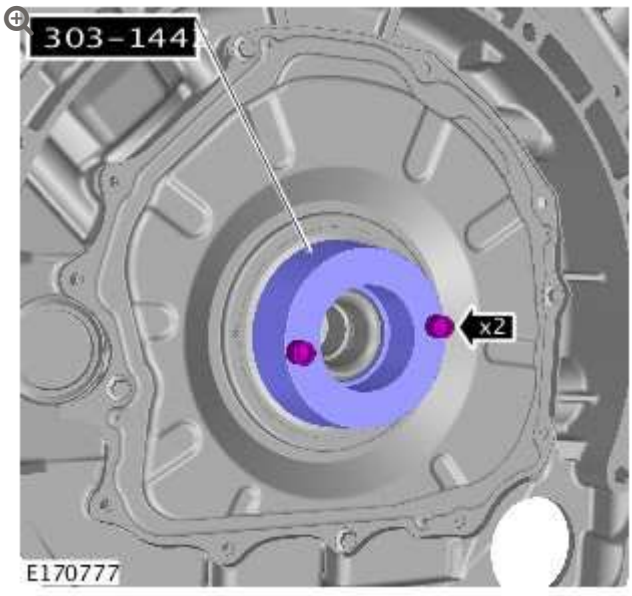

Remove the special tool.

Special Tool(s): 303-1442

8.

CAUTION:

Apply pressure to the rear oil seal plate in the sequence shown, when installing the special tool.

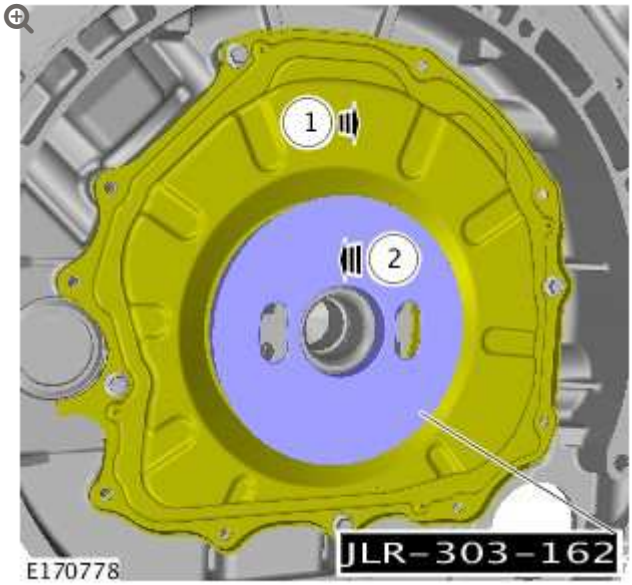

Special Tool(s): JLR-303-1622

9.

NOTE:

Tighten the bolts in the indicated sequence.

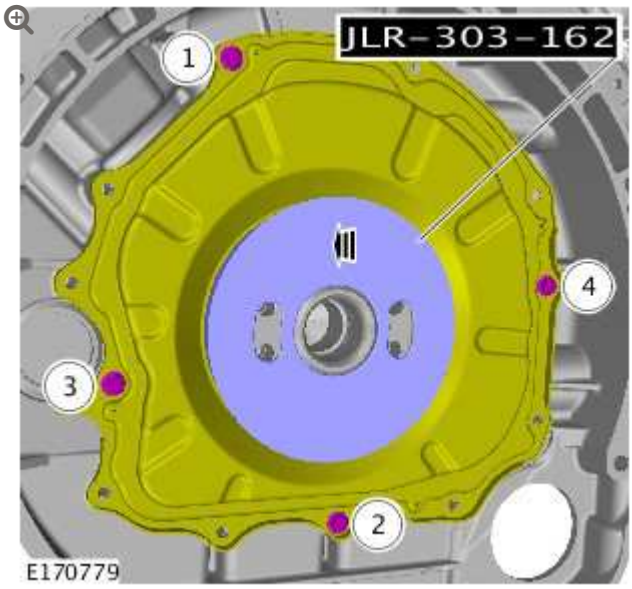

Using the special tool, install the component.

Special Tool(s): JLR-303-1622

Torque: **11 Nm**

10.



Remove the special tool.

Special Tool(s): JLR-303-1622

11.

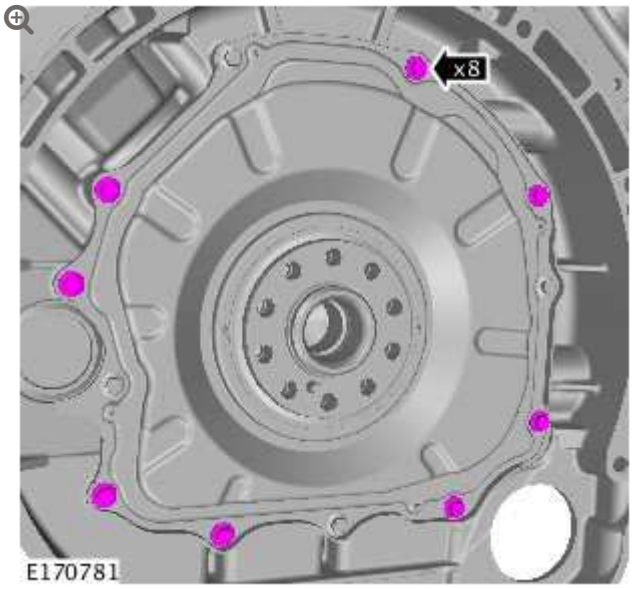

Torque: **11 Nm**

12. Refer to: Flexplate (303-01B Engine - V8 S/C 5.0L Petrol, Removal and Installation).

ENGINE – V8 S/C 5.0L PETROL

CYLINDER BLOCK OIL GALLERY PLUG (G1451564)

REMOVAL AND INSTALLATION

REMOVAL

NOTES:

- Removal steps in this procedure may contain installation details.
- Some variation in the illustrations may occur, but the essential information is always correct.

1. Refer to: Plenum Chamber (412-01A Air Distribution and Filtering, Removal and Installation).

2. **WARNING:**

   Do not work on or under a vehicle supported only by a jack. Always support the vehicle on safety stands.

   Raise and support the vehicle.

3. Refer to: Engine Undershield (501-02 Front End Body Panels, Removal and Installation).

4. 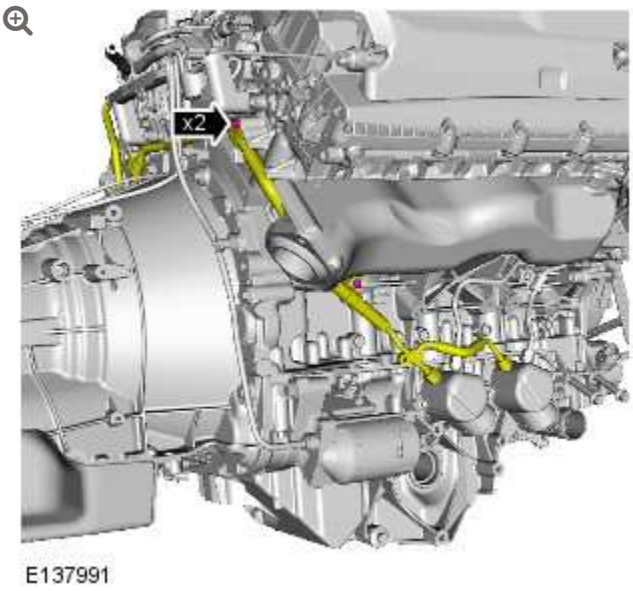

E137991

Torque: **12 Nm**

5. 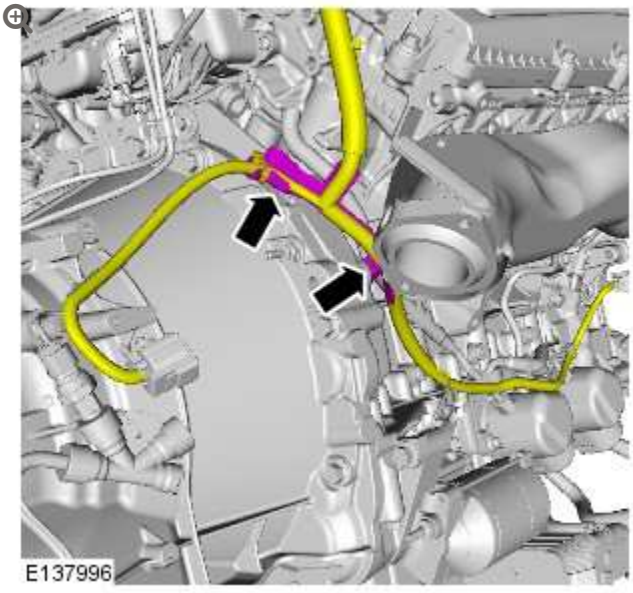
E137996

6.

CAUTION:

Make sure that the mating faces are clean and free of corrosion and foreign material.

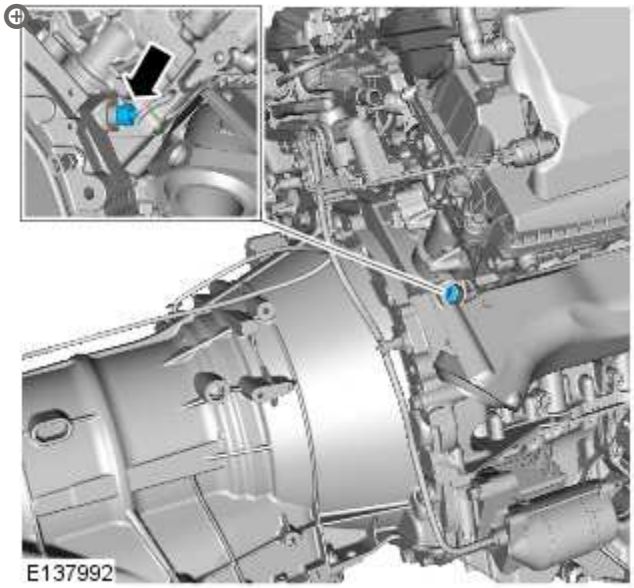

Torque:

Stage 1: **40 Nm**

Stage 2: **180°**

INSTALLATION

1. To install, reverse the removal procedure.

ENGINE – V8 S/C 5.0L PETROL

CYLINDER HEAD LH (G1224595)

REMOVAL AND INSTALLATION

12.29.04	CYLINDER HEAD – ASSEMBLY – LEFT/ONE ONLY – RENEW	5000 CC, AJ V8, SUPERCHARGED	21.2	USED WITHINS	+

REMOVAL

NOTES:

- Removal steps in this procedure may contain installation details.
- Some variation in the illustrations may occur, but the essential information is always correct.

1. Disconnect the battery ground cable.
   Refer to: Specifications (414-00 Battery and Charging System - General Information, Specifications).

2.

WARNING:

Make sure to support the vehicle with axle stands.

Raise and support the vehicle.

3. Refer to: Camshaft LH (303-01B Engine - V8 S/C 5.0L Petrol, Removal and Installation).

4. Refer to: Exhaust Manifold LH (303-01B Engine - V8 S/C 5.0L Petrol, Removal and Installation).

5. 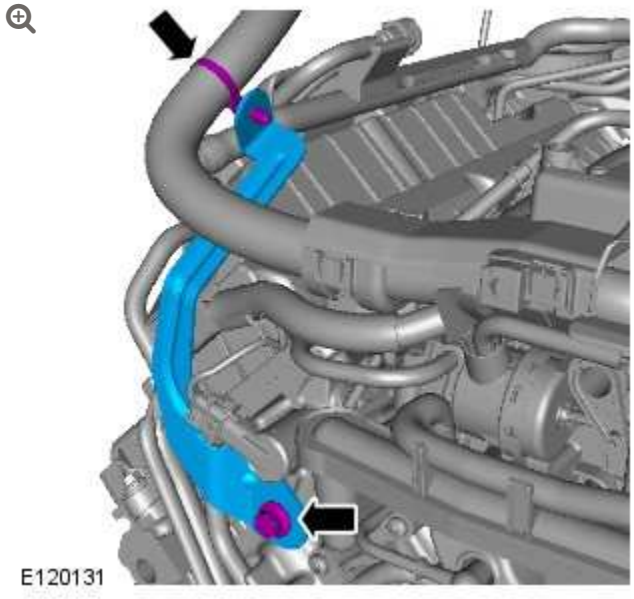

6.

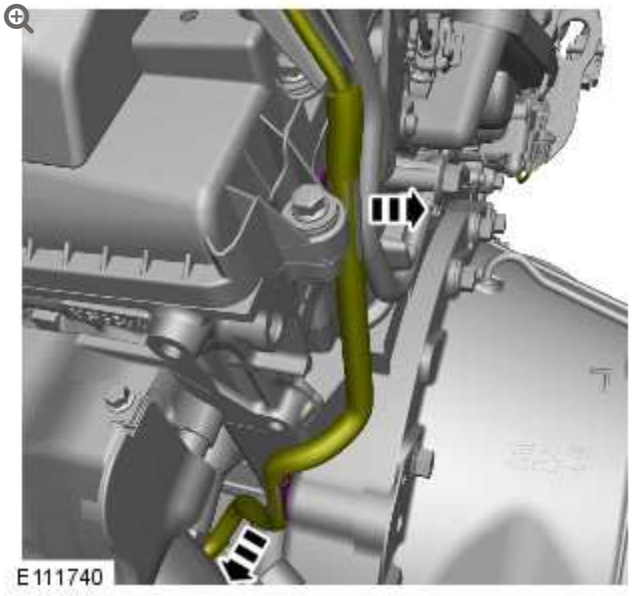

7.

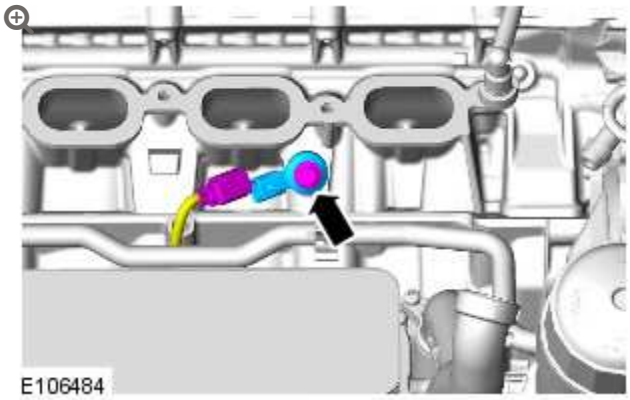

8.

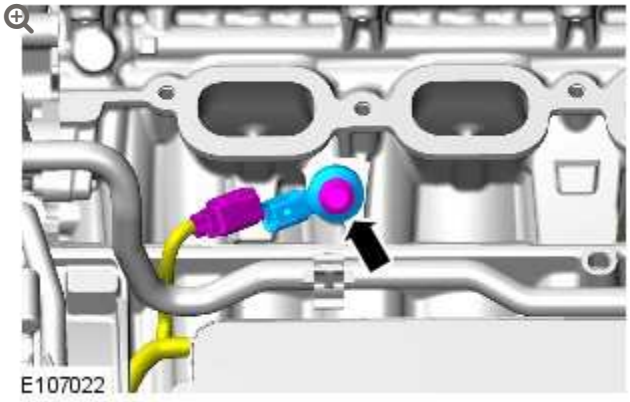

9.

CAUTION:

Be prepared to collect escaping coolant.

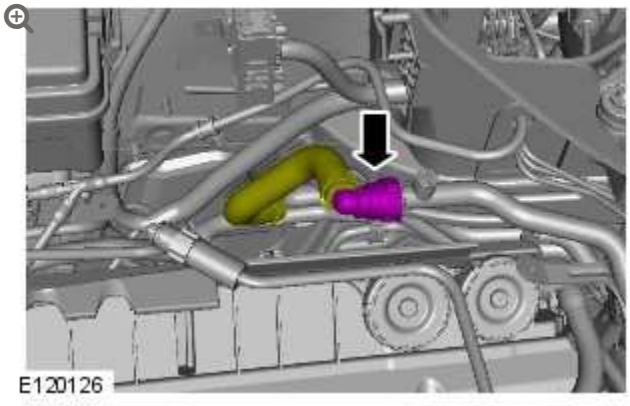

10.

CAUTION:

Be prepared to collect escaping coolant.

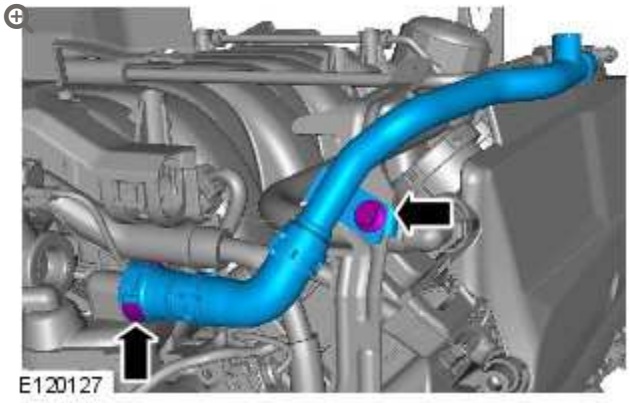

11.

NOTE:

Clamp the hose to minimize coolant loss.

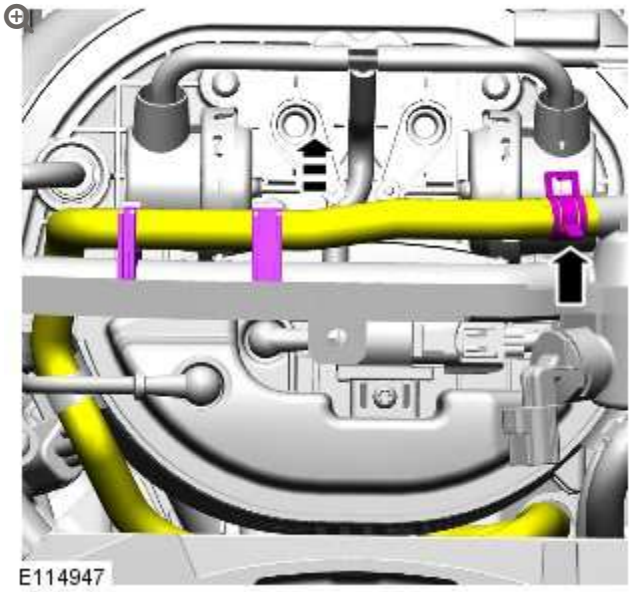

12.

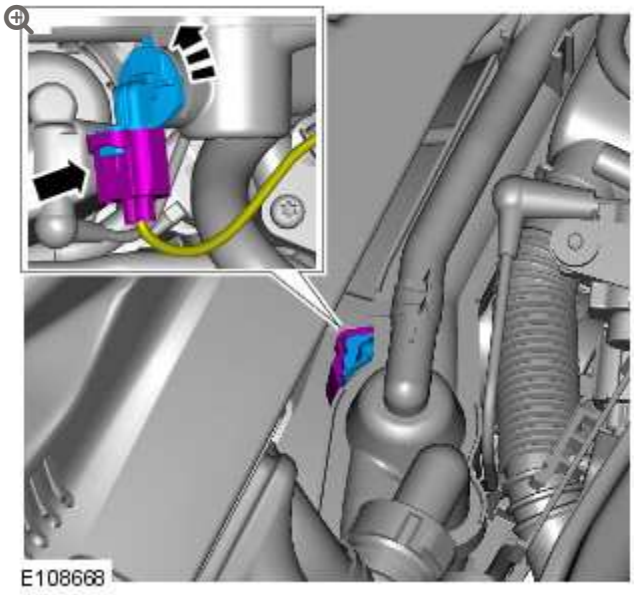

13.

CAUTION:

Discard the seals.

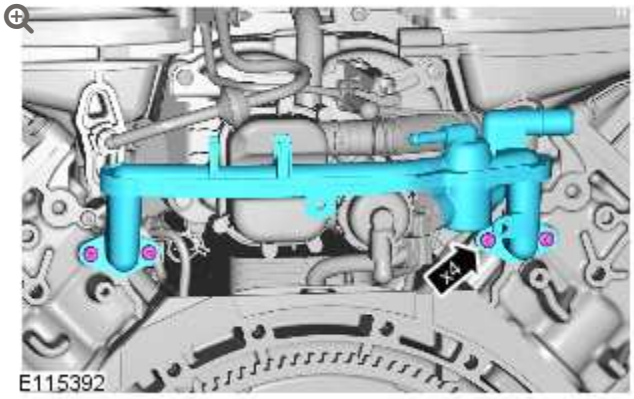

14.

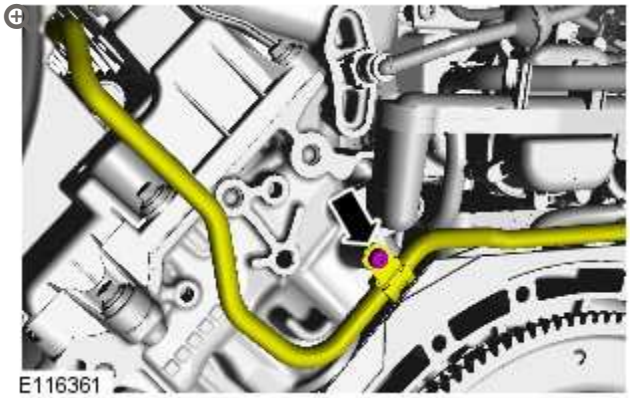

15.

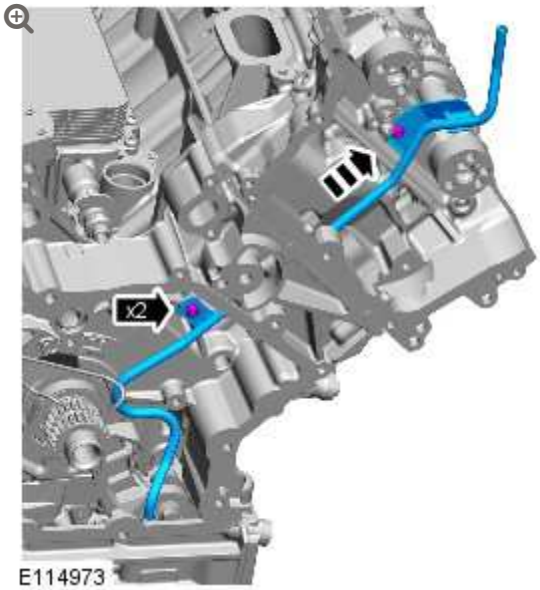

16.

CAUTIONS:

- If a new cylinder head has been installed then new tappets must be installed.
- If the cylinder head is being removed without a new component being installed, the tappets must be installed in their original positions.

NOTE:

Left-hand shown, right-hand similar.



17.

CAUTION:

Discard the 10 head bolts

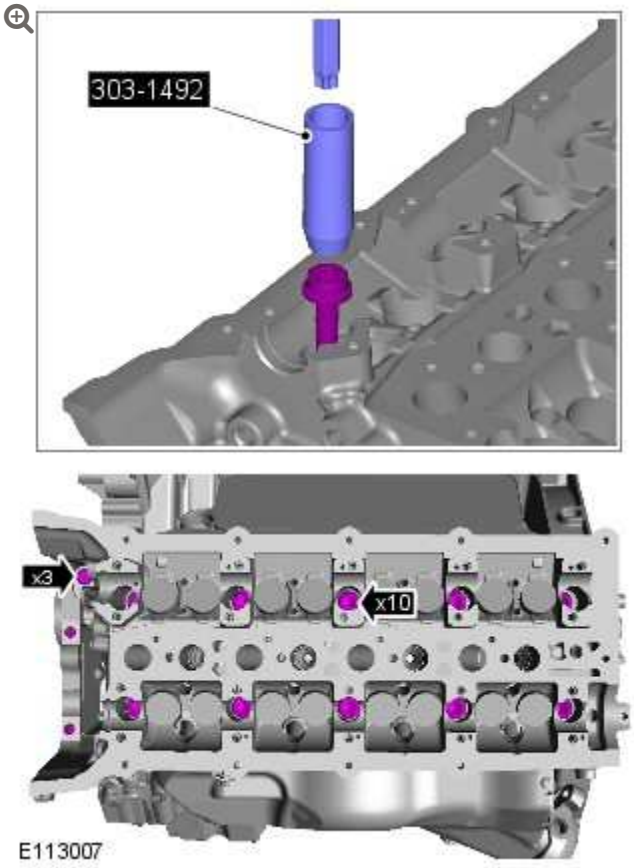

18.

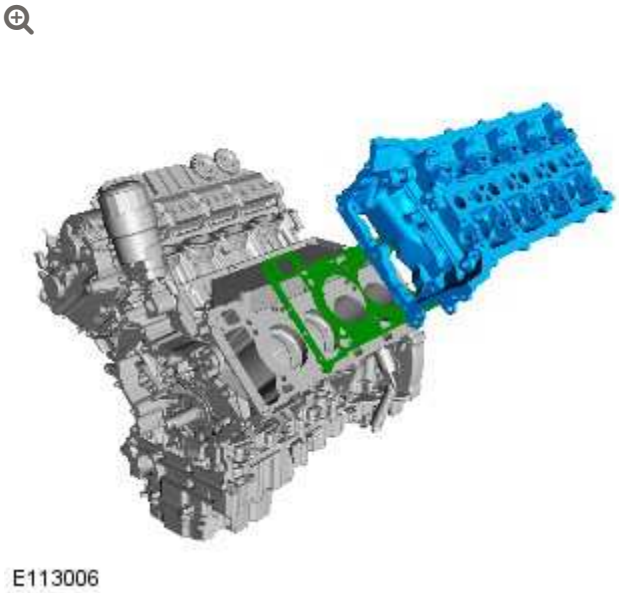

INSTALLATION

1.

CAUTIONS:

- Make sure that the mating faces are clean and free of foreign material.
- An acceptable flatness of the cylinder head is 0.2mm.

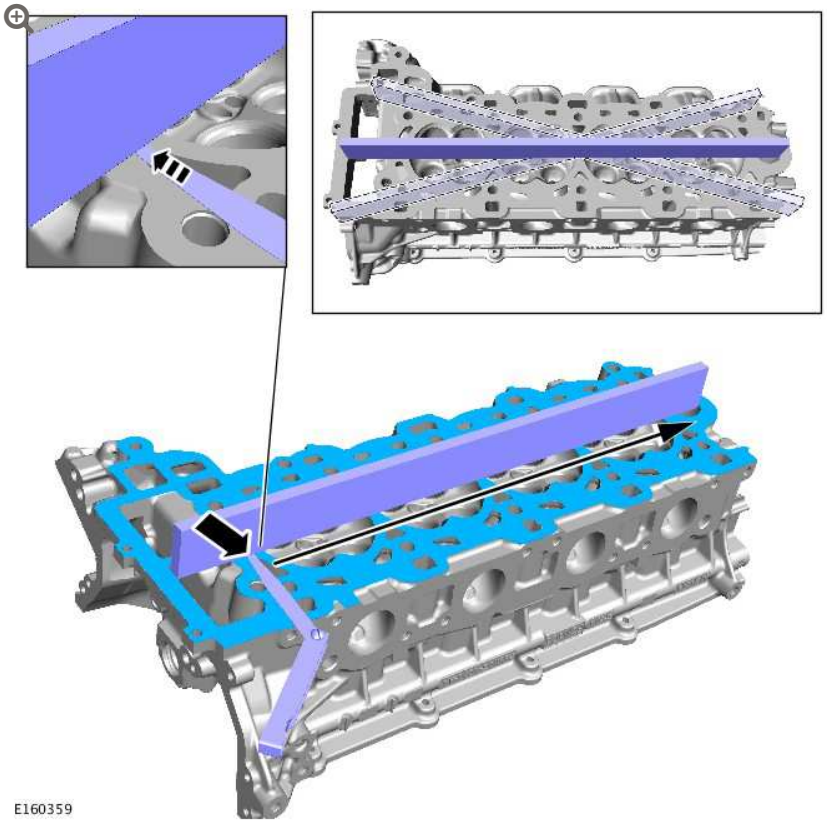

1. Clean and inspect the cylinder head and cylinder block.
2. Check the cylinder head face for distortion, across the center and from corner to corner.
   Refer to: Cylinder Head Distortion (303-00 Engine System - General Information, General Procedures).

2.

WARNING:

Make sure care is taken when handling the cylinder head gasket.

CAUTIONS:

- The head gasket must be installed over the cylinder block dowels.
- Make sure that the mating faces are clean and free of foreign material.

NOTE:

Install a new cylinder head gasket.

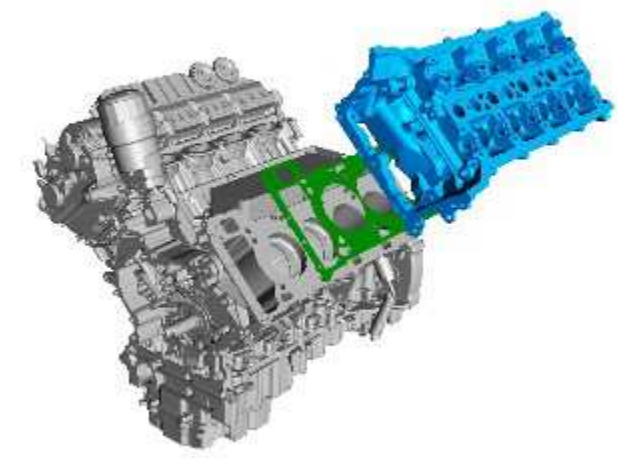

E113006

3.

CAUTION:

Make sure that new cylinder head bolts are installed.

NOTE:

Tighten the bolts in the indicated sequence.

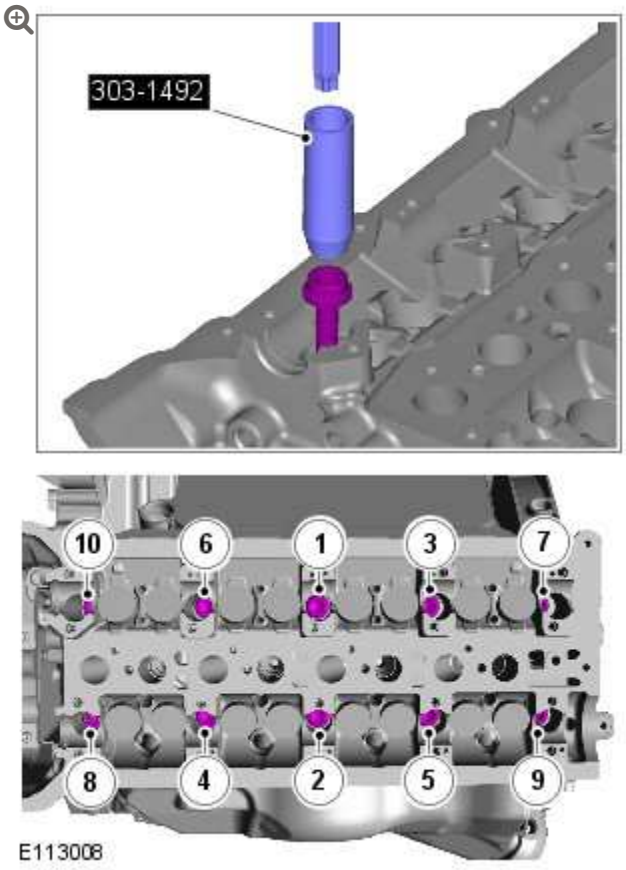

Torque: **20 Nm**

4.

NOTE:

Tighten the bolts in the indicated sequence.

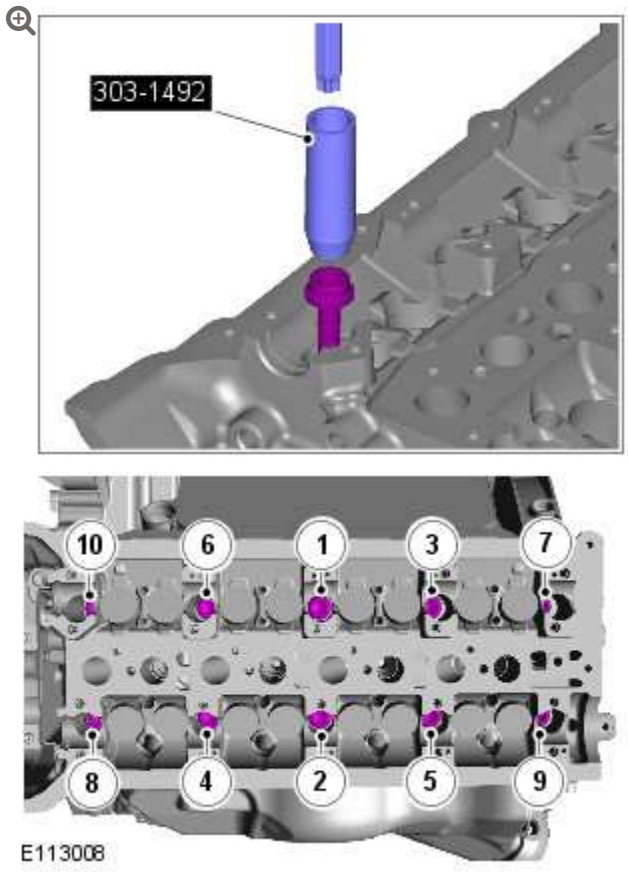

Torque: **35 Nm**

5.

NOTE:

Tighten the bolts in the indicated sequence.

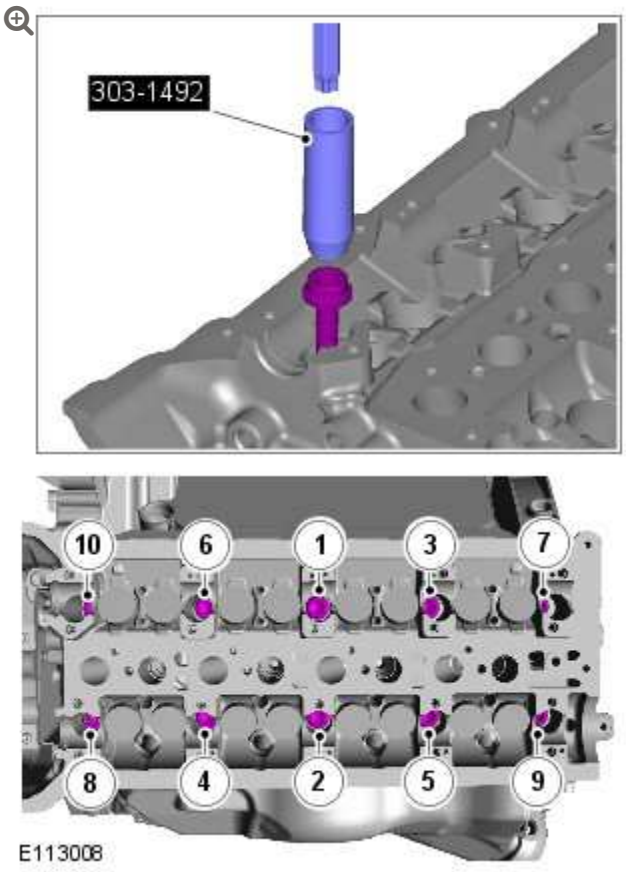

Tighten the bolts 1 to 10, a further 90 degrees.

6.

NOTE:

Tighten the bolts in the indicated sequence.

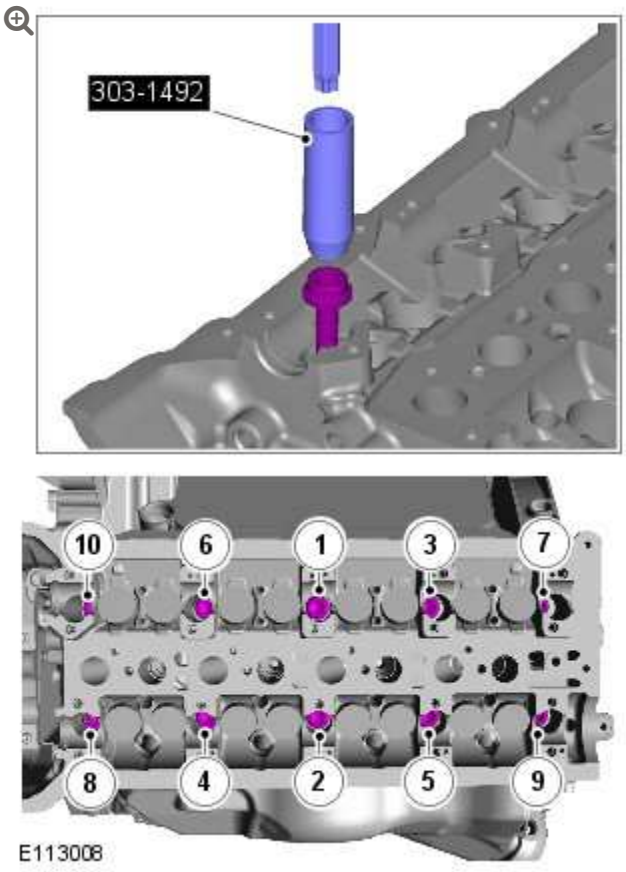

Tighten the bolts 1 to 10, a further 120 degrees.

7.

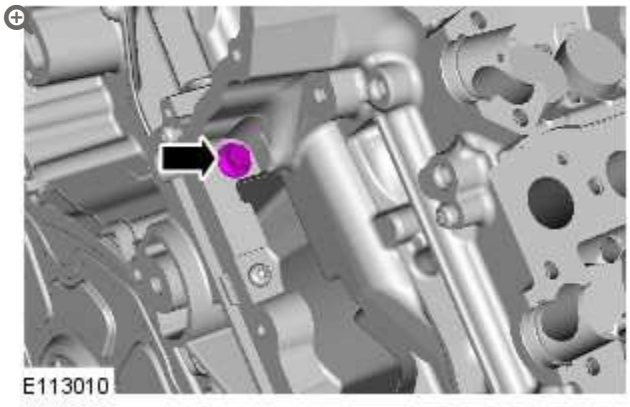

Torque: **25 Nm**

8.

NOTE:

Tighten the bolts in the indicated sequence.

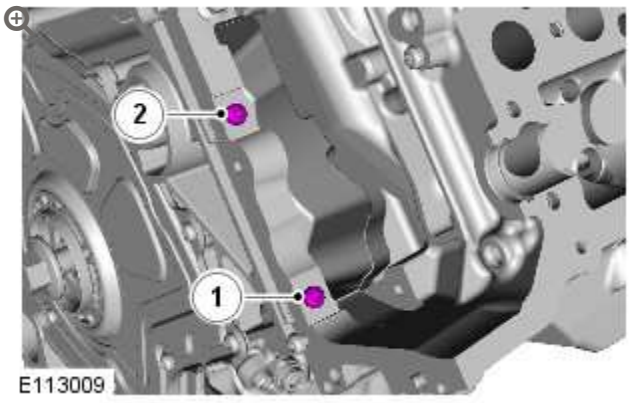

Torque: **12 Nm**

9.

CAUTIONS:

- If a new cylinder head has been installed then new tappets must be installed.
- If the cylinder head is being removed without a new component being installed, the tappets must be installed in their original positions.



Lubricate the valve tappets with clean engine oil.

10.

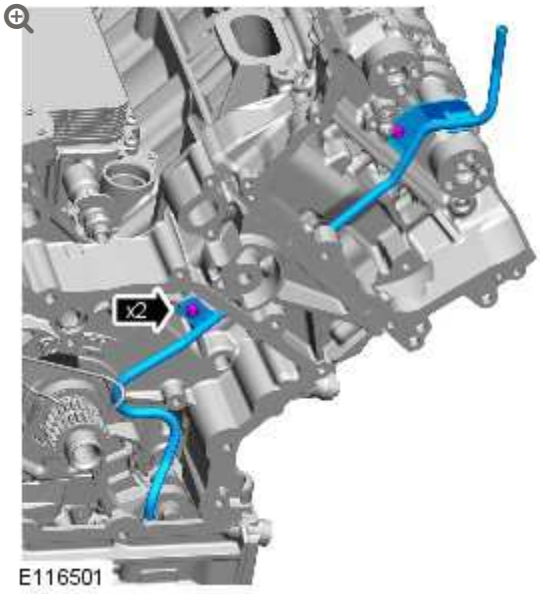

Torque: **12 Nm**

11.

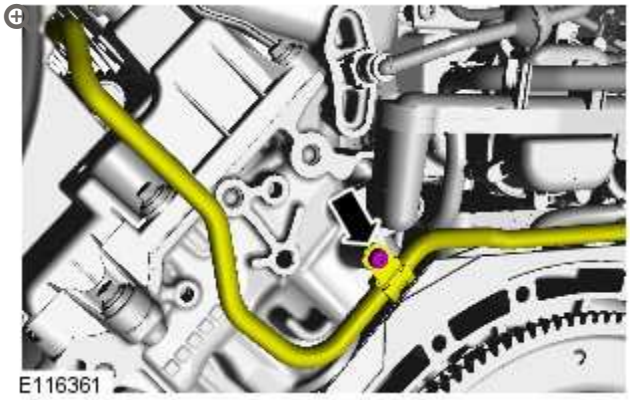

Torque: **10 Nm**

12.

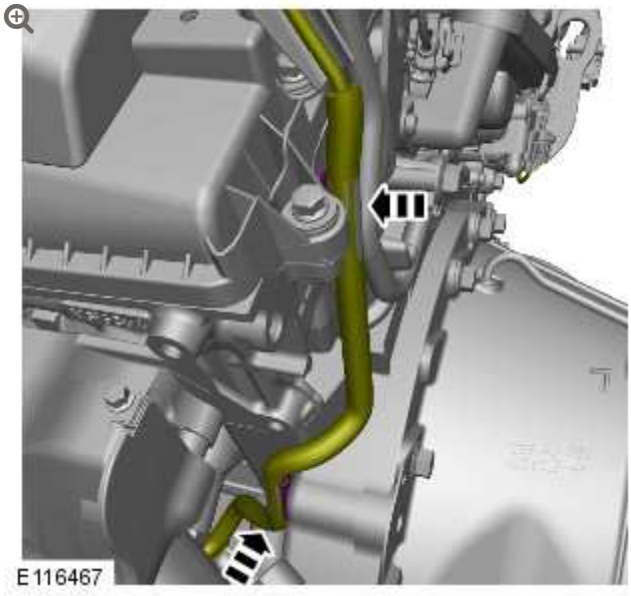

13.

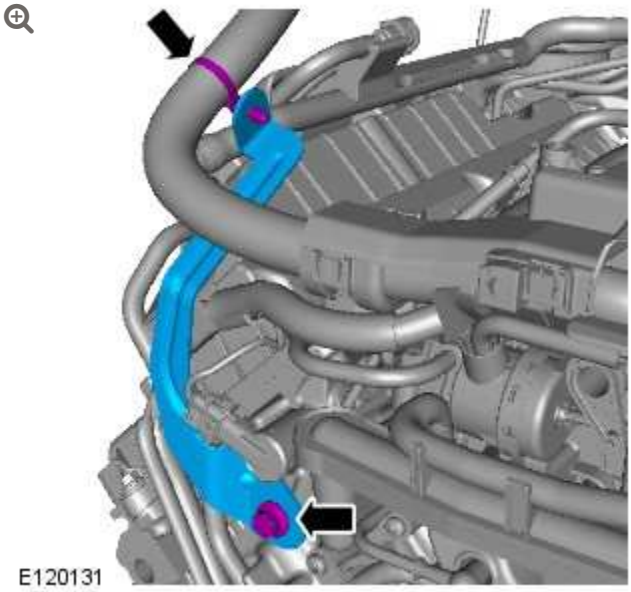

Torque: **25 Nm**

14.

CAUTION:

Install the new seals.

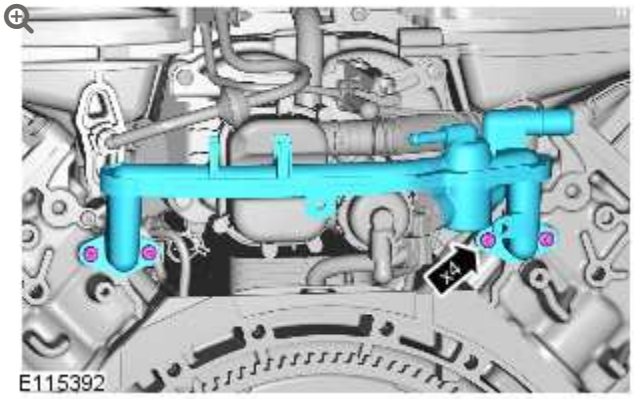

Torque: **10 Nm**

15.

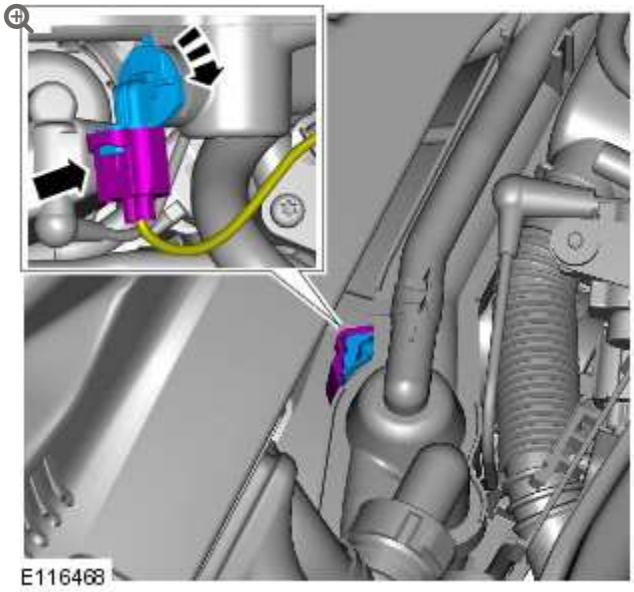

16.

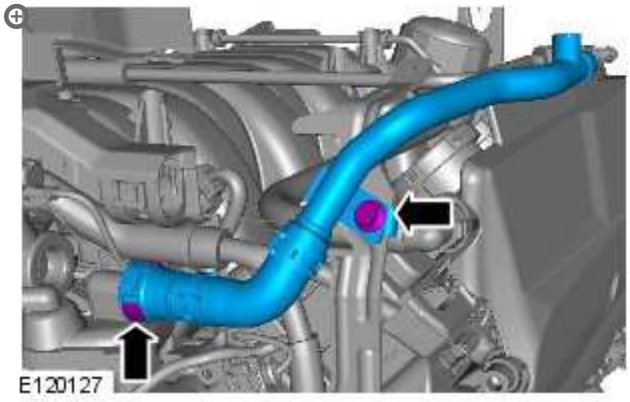

Torque: **10 Nm**

17.

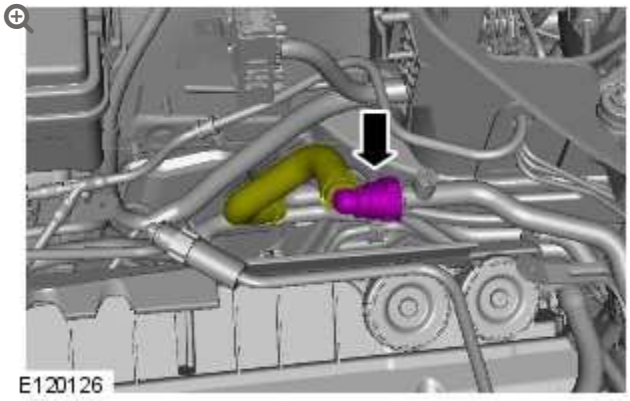

18.

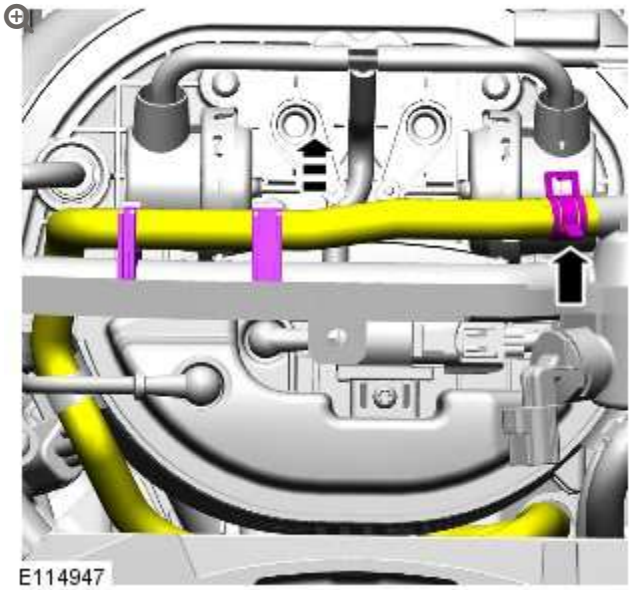

19.

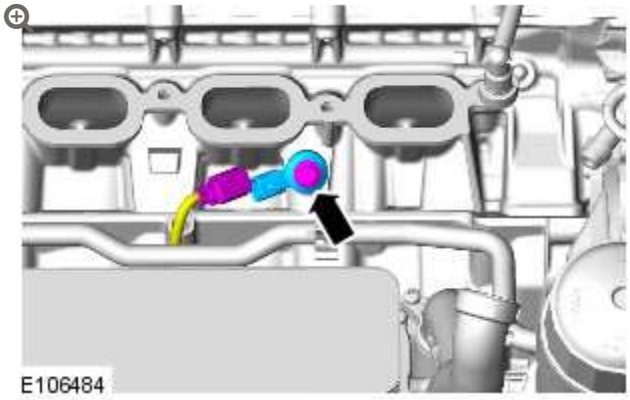

Torque: **20 Nm**

20.

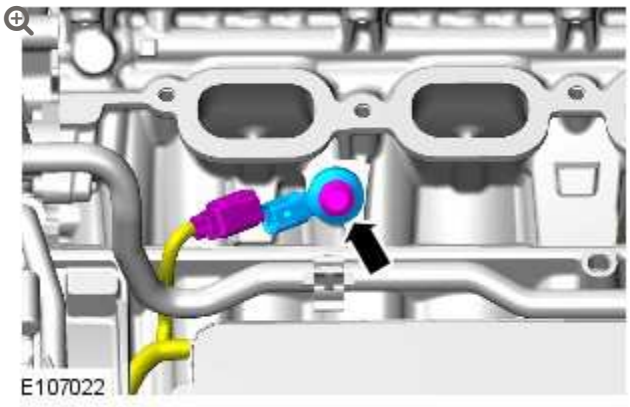

Torque: **20 Nm**

21. Refer to: Exhaust Manifold LH (303-01B Engine - V8 S/C 5.0L Petrol, Removal and Installation).

22. Refer to: Camshaft LH (303-01B Engine - V8 S/C 5.0L Petrol, Removal and Installation).

23. Connect the battery ground cable.
    Refer to: Specifications (414-00 Battery and Charging System - General Information, Specifications).

ENGINE – V8 S/C 5.0L PETROL

CYLINDER HEAD RH (G1224596)

REMOVAL AND INSTALLATION

12.29.05	CYLINDER HEAD – ASSEMBLY – RIGHT – RENEW	5000 CC, AJ V8, SUPERCHARGED	19.6	USED WITHINS	+

REMOVAL

NOTES:

- Removal steps in this procedure may contain installation details.
- Some variation in the illustrations may occur, but the essential information is always correct.

1. Disconnect the battery ground cable.
   Refer to: Specifications (414-00 Battery and Charging System - General Information, Specifications).

2.

WARNING:

Make sure to support the vehicle with axle stands.

Raise and support the vehicle.

3. Refer to: Camshaft RH (303-01B Engine - V8 S/C 5.0L Petrol, Removal and Installation).

4. Refer to: Exhaust Manifold RH (303-01B Engine - V8 S/C 5.0L Petrol, Removal and Installation).

5. 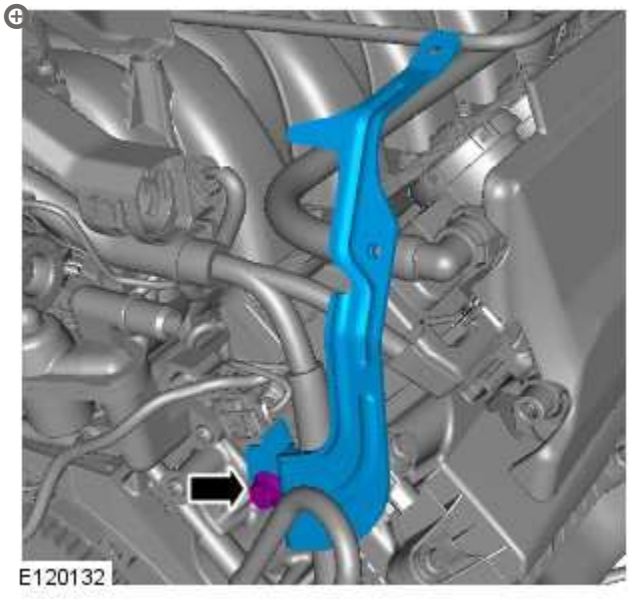

6. **CAUTION:**

Be prepared to collect escaping coolant.

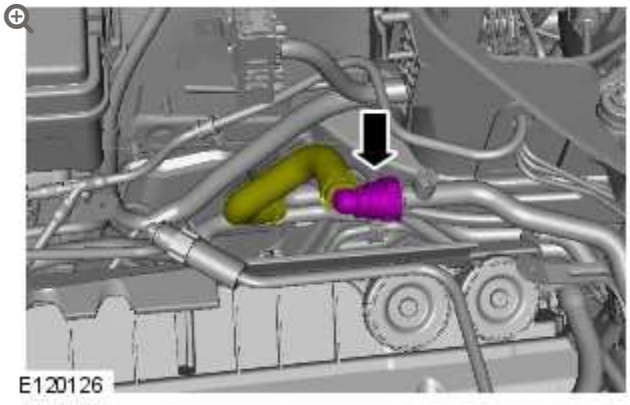

7.

CAUTION:

Be prepared to collect escaping coolant.

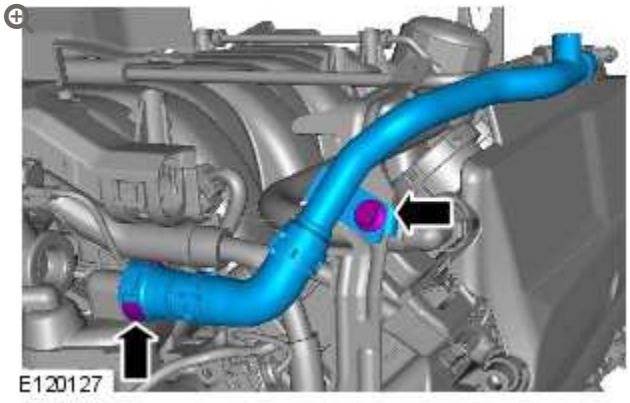

8.

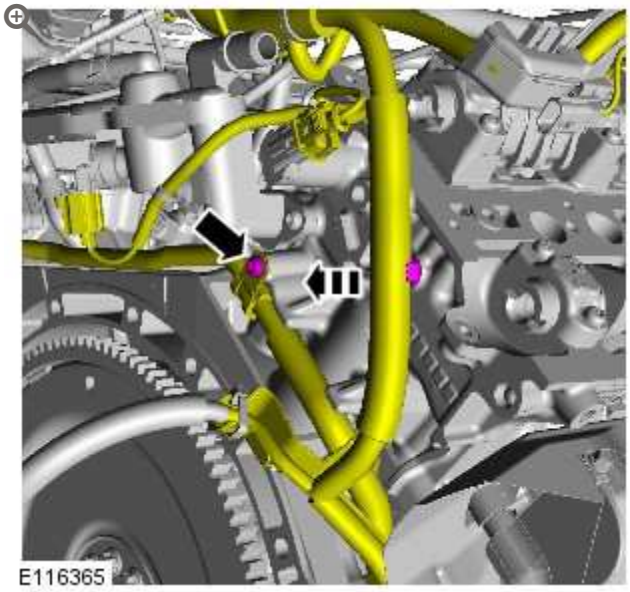

9.

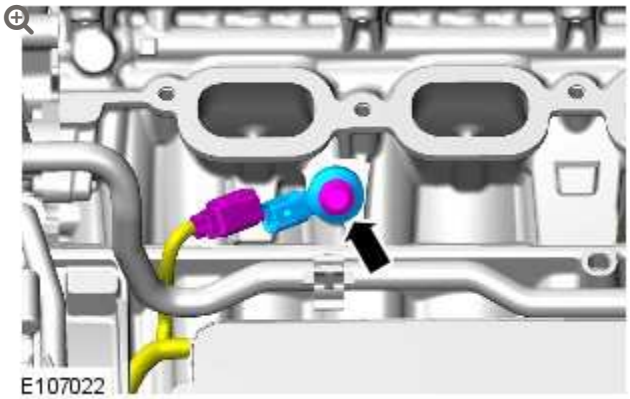

10.

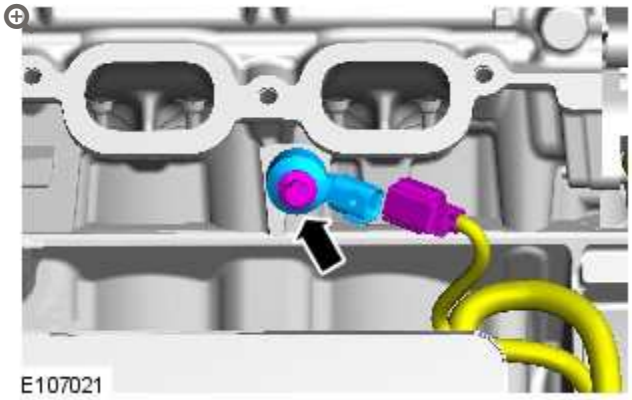

11.

NOTE:

Clamp the hose to minimize coolant loss.

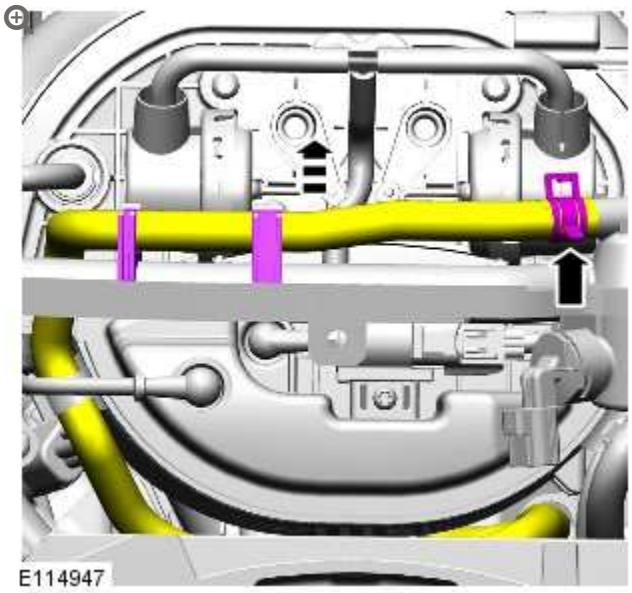

12.

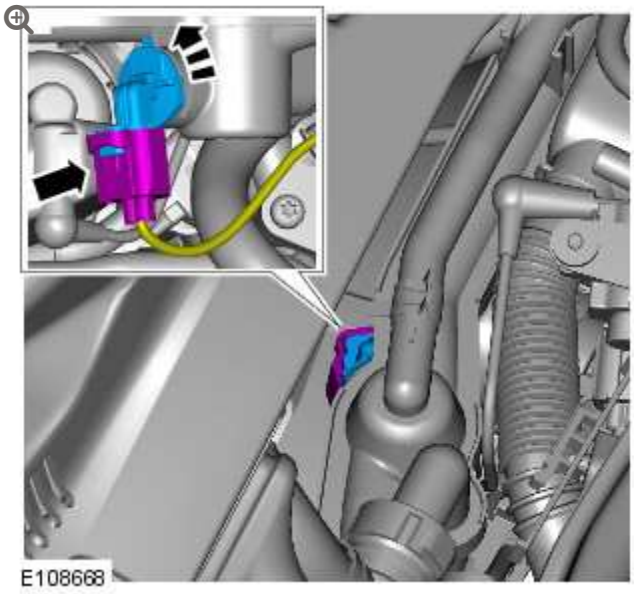

13.

CAUTION:

Discard the seals.

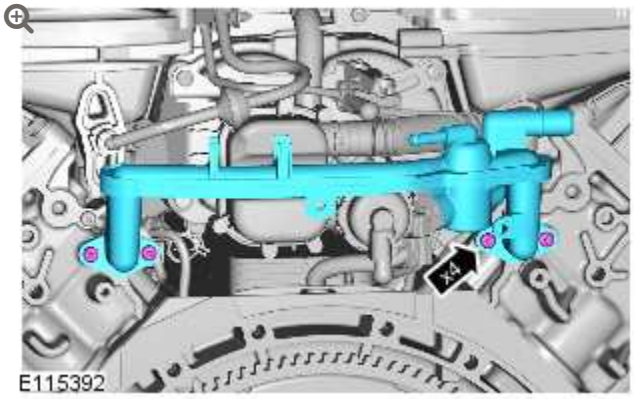

14.

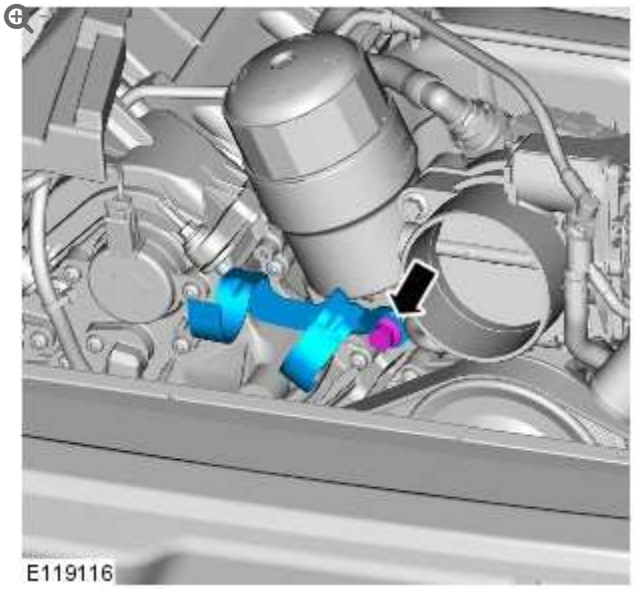

15.

NOTE:

Remove and discard the O-ring seal.

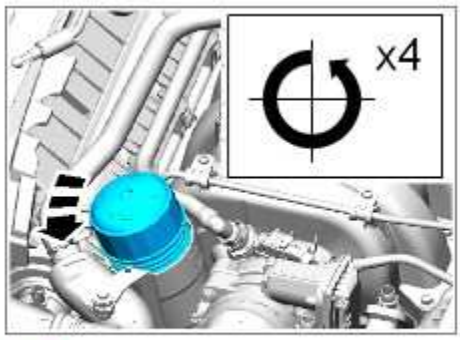

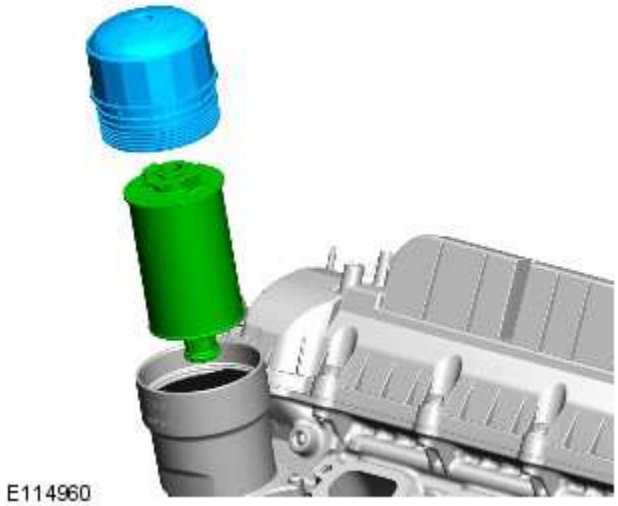

16.

NOTE:

Discard the gasket.

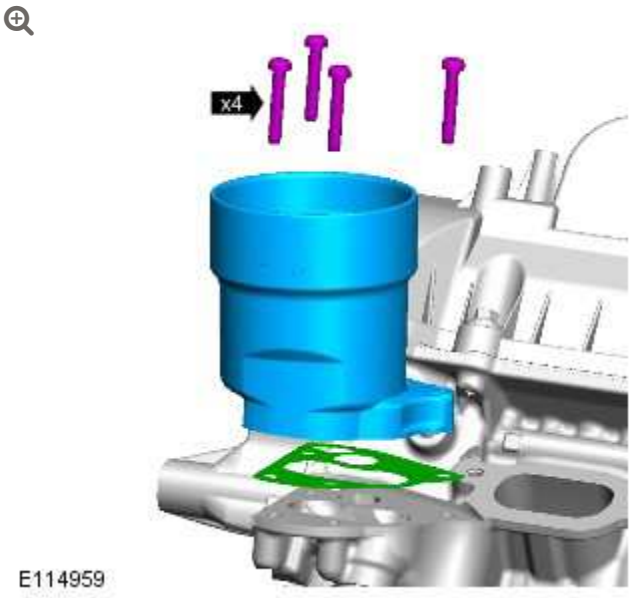

17.

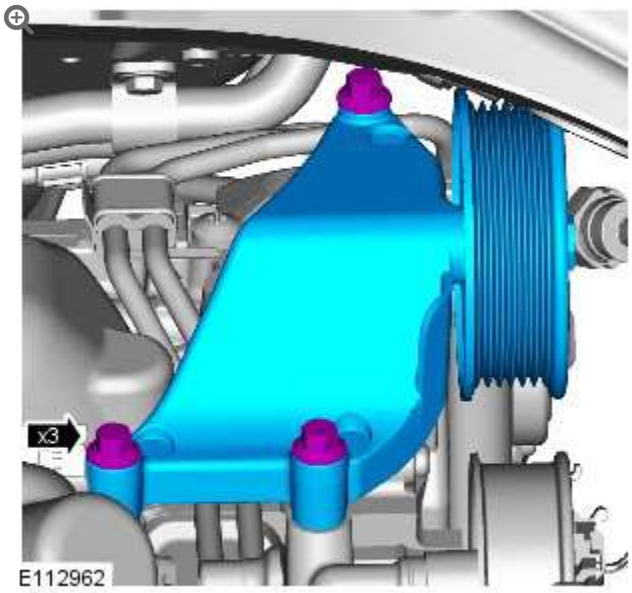

18.

CAUTIONS:

- If a new cylinder head has been installed then new tappets must be installed.
- If the cylinder head is being removed without a new component being installed, the tappets must be installed in their original positions.



19.

CAUTION:

Discard the 10 head bolts.

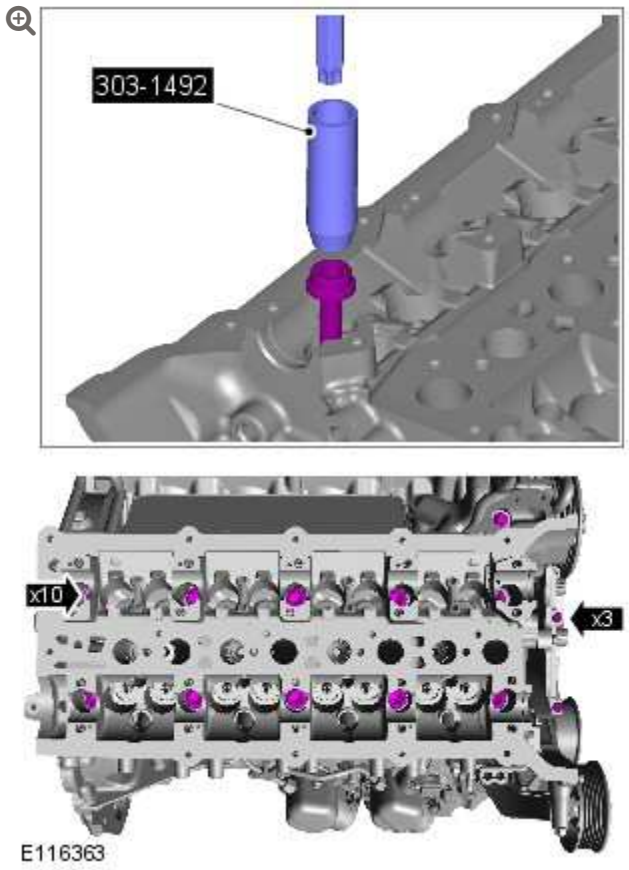

20.

NOTE:

Discard the gasket.

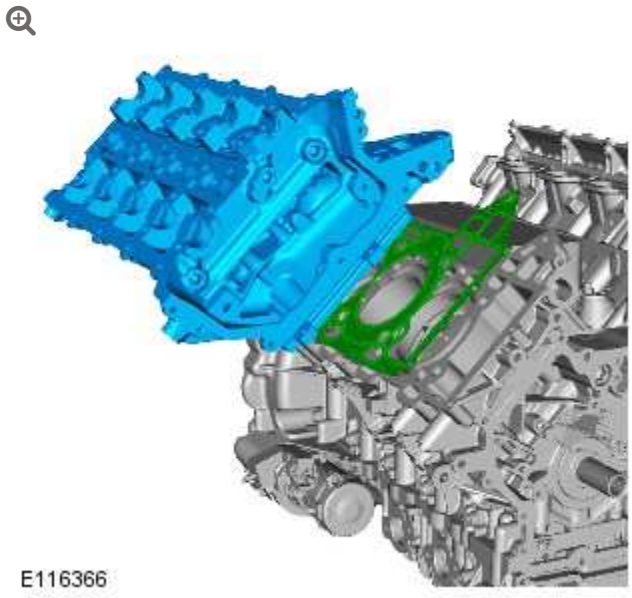

INSTALLATION

1. **CAUTIONS:**

- Make sure that the mating faces are clean and free of foreign material.
- An acceptable flatness of the cylinder head is 0.2mm.

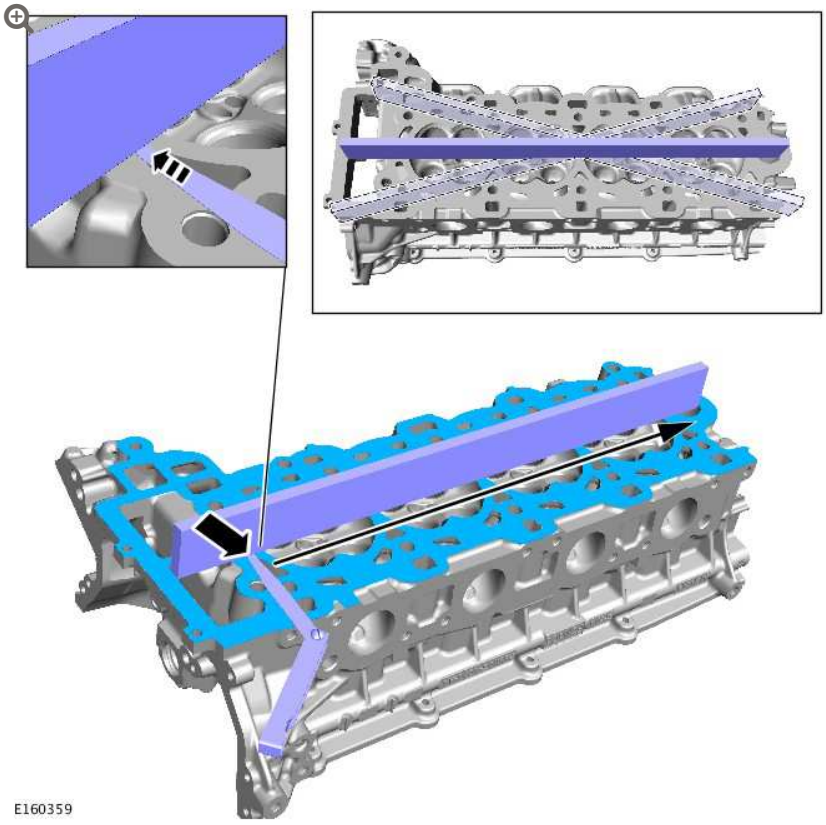

1. Clean and inspect the cylinder head and cylinder block.
2. Check the cylinder head face for distortion, across the center and from corner to corner.
   Refer to: Cylinder Head Distortion (303-00 Engine System - General Information, General Procedures).

2.

WARNING:

Make sure care is taken when handling the cylinder head gasket.

NOTE:

Install a new gasket.

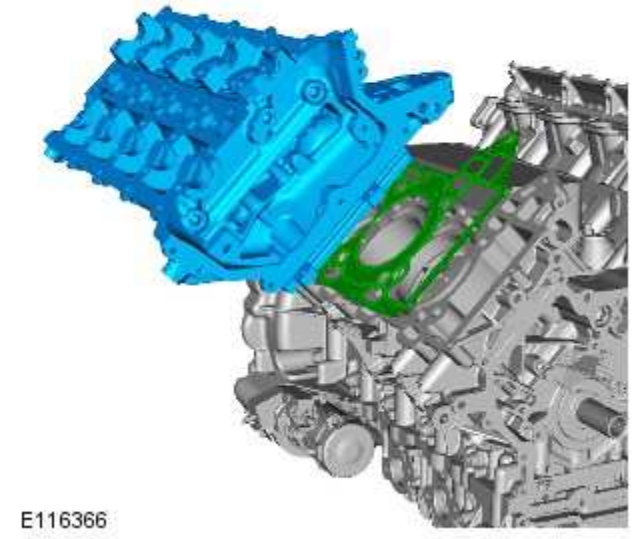

3.

CAUTION:

Make sure that new cylinder head bolts are installed.

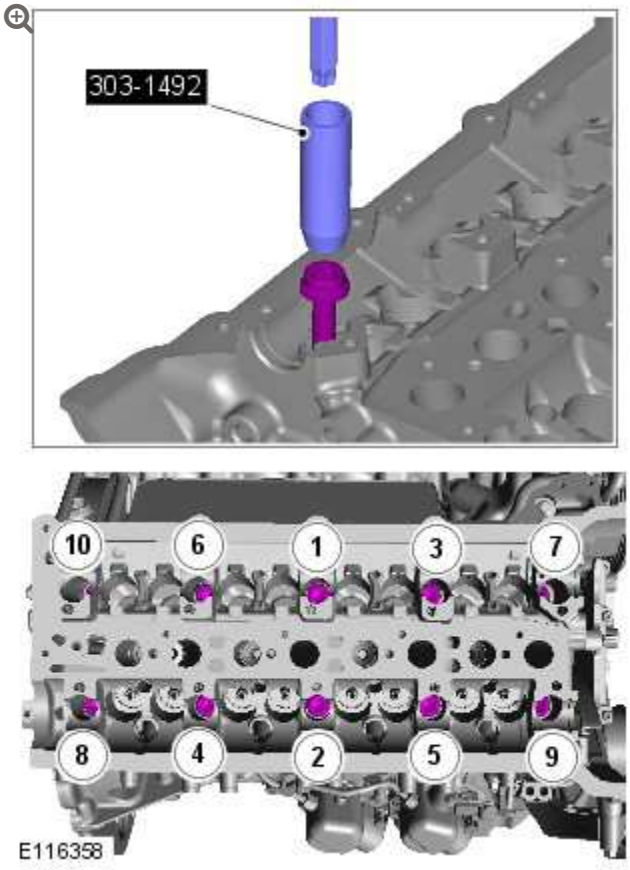

Torque: **20 Nm**

4.

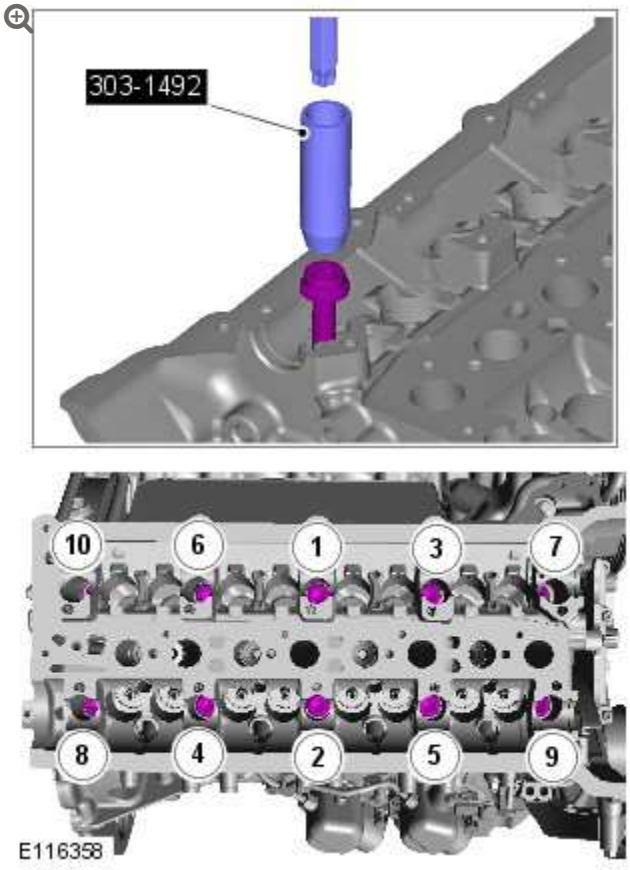

Torque: **35 Nm**

5.

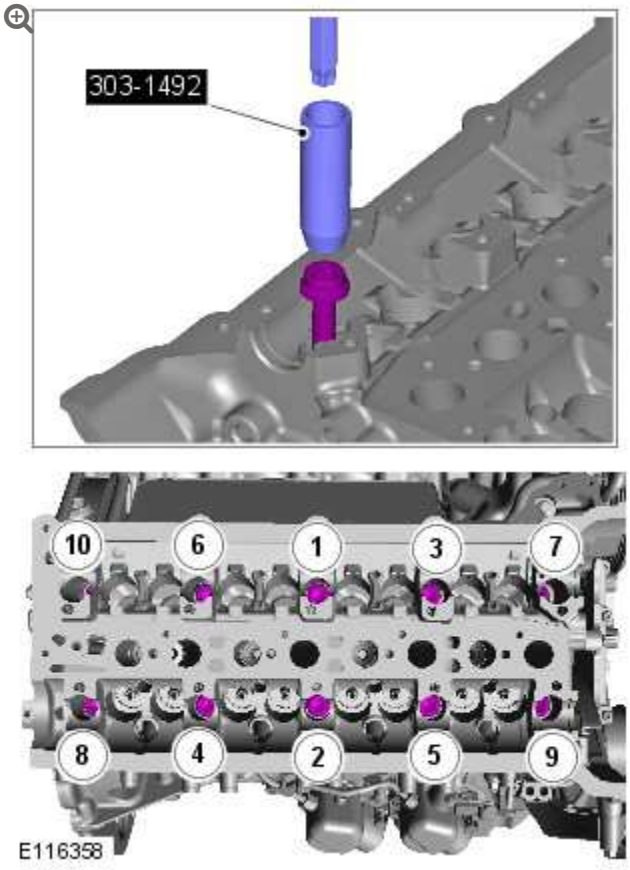

Tighten the bolts 1 to 10, a further 90 degrees.

6.

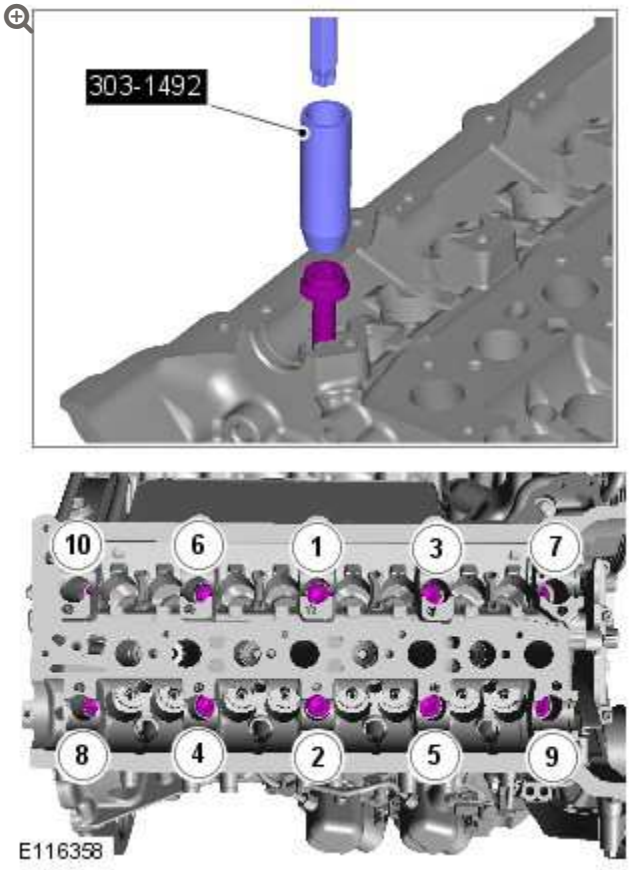

Tighten the bolts 1 to 10, a further 120 degrees.

7.

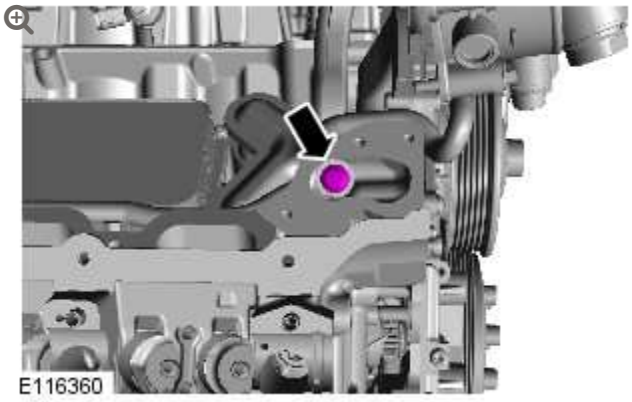

Torque: **25 Nm**

8.

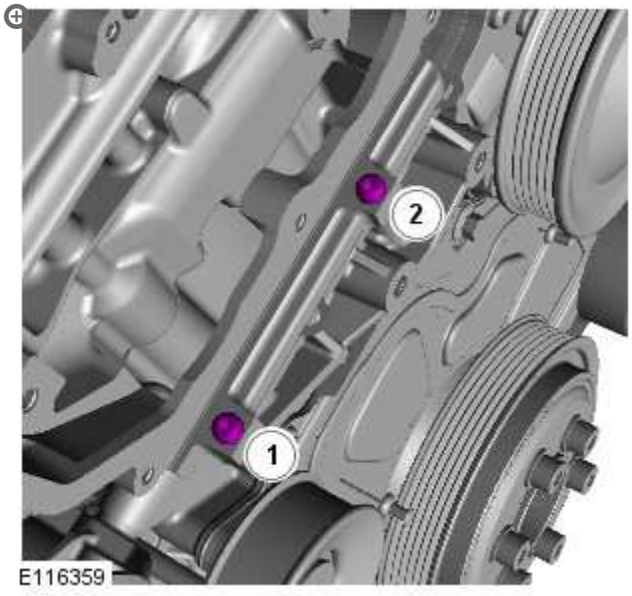

Torque: **12 Nm**

9. **CAUTIONS:**

- If a new cylinder head has been installed then new tappets must be installed.
- If the cylinder head is being removed without a new component being installed, the tappets must be installed in their original positions.



Lubricate the valve tappets with clean engine oil.

10.

NOTE:

Install a new gasket.

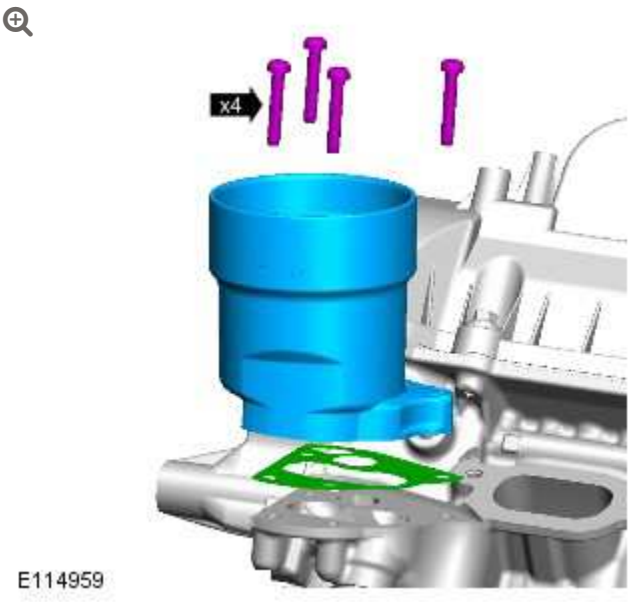

11.

CAUTION:

A new O-ring seal is to be installed.

NOTE:

Install a new engine oil filter.

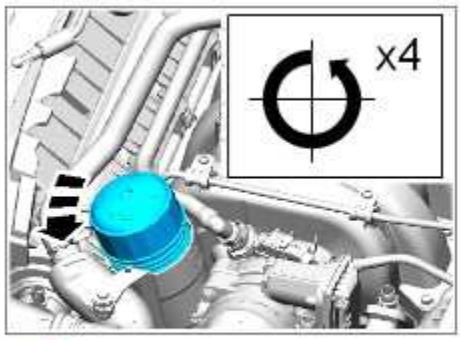

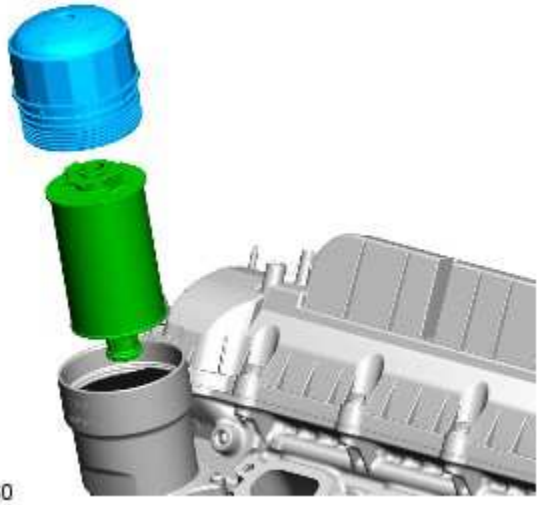

12.

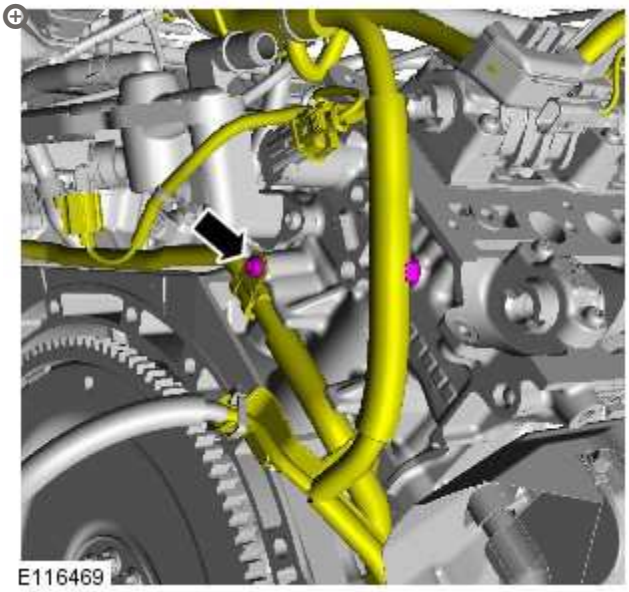

Torque: **12 Nm**

13.

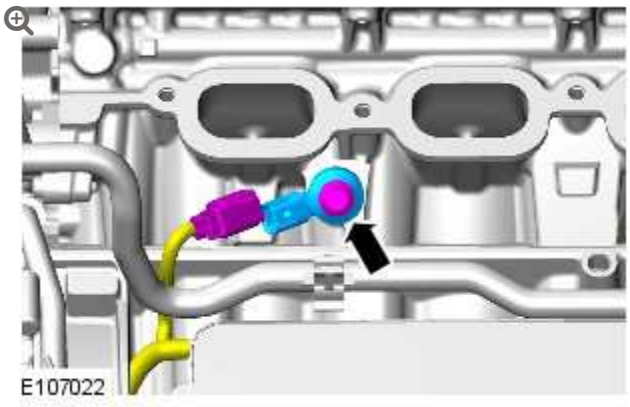

Torque: **20 Nm**

14.

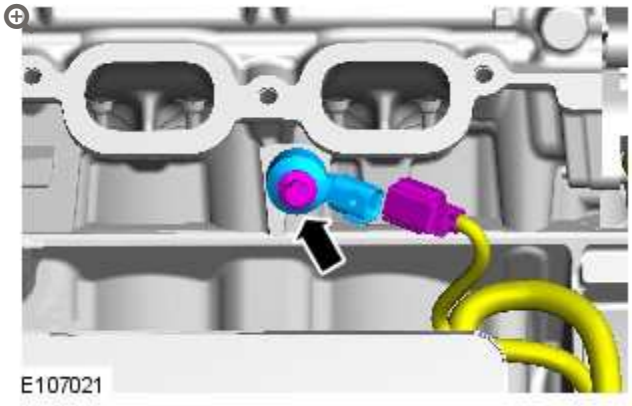

Torque: **20 Nm**

15.

CAUTION:

Install the new seals.

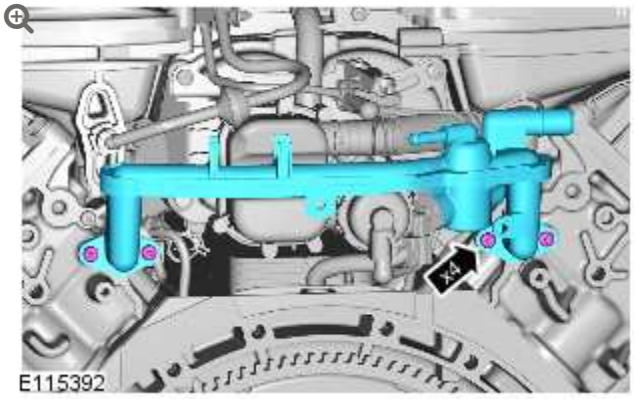

Torque: **10 Nm**

16.

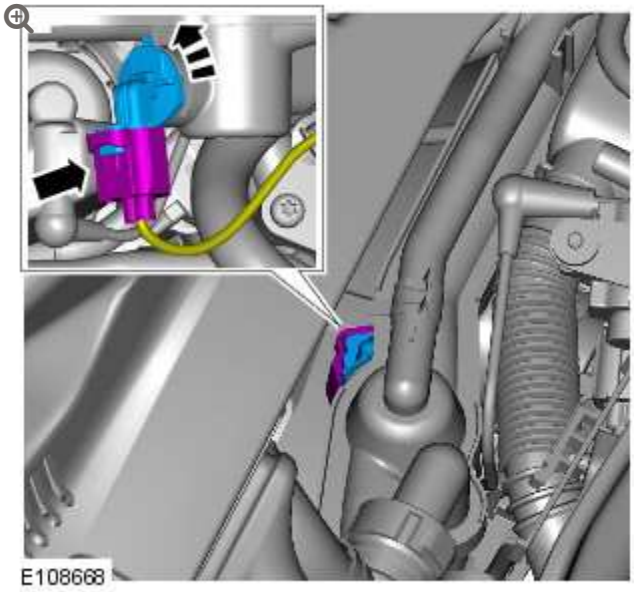

17.

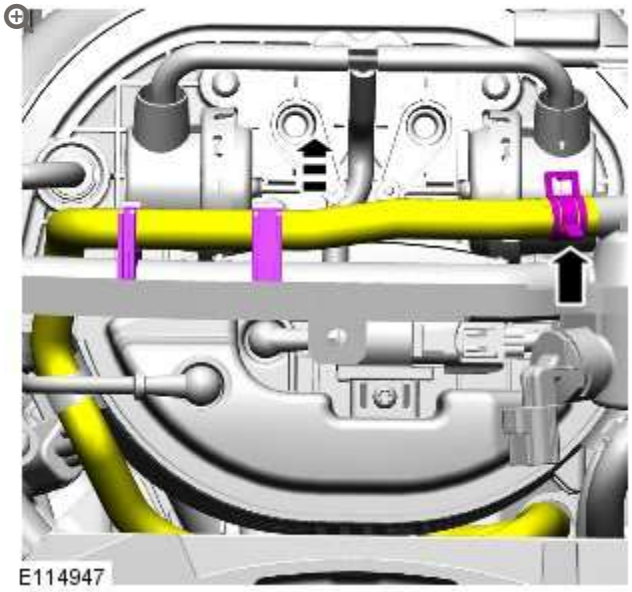

18.

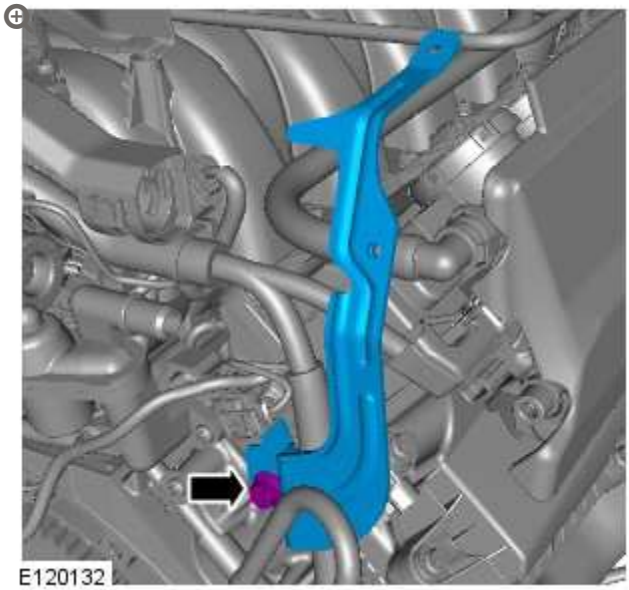

19.

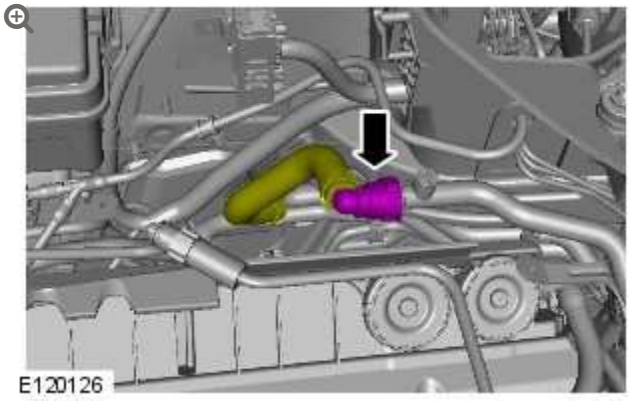

20.

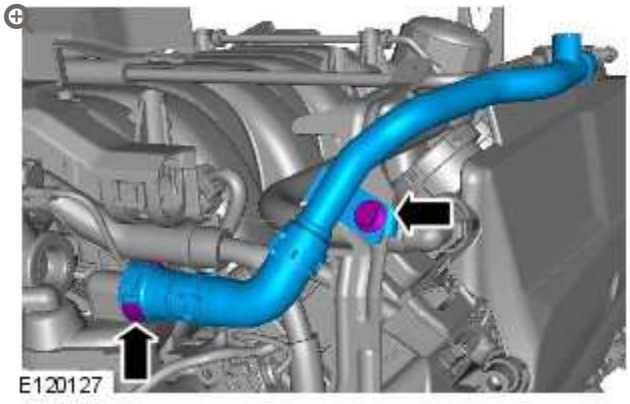

Torque: **10 Nm**

21.

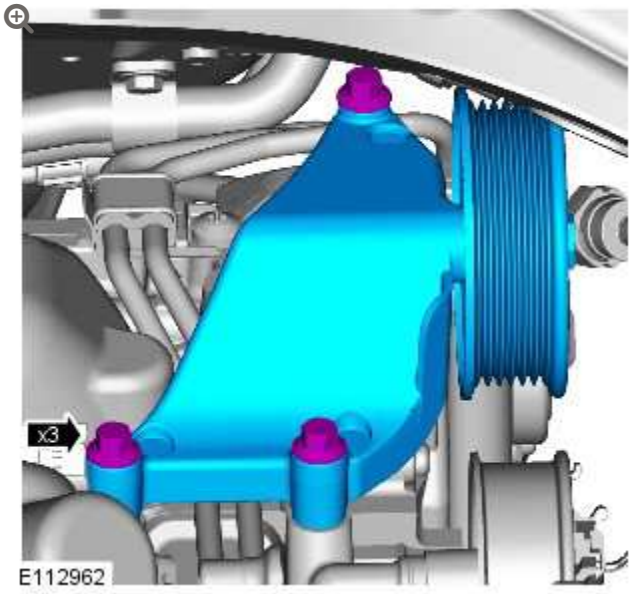

Torque: **25 Nm**

22. 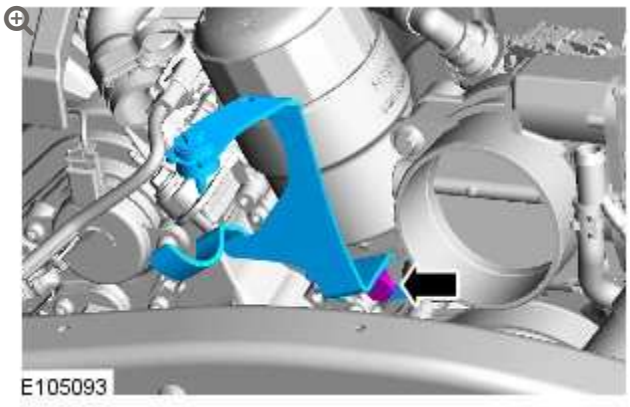

Torque: **25 Nm**

23. Refer to: Exhaust Manifold RH (303-01B Engine - V8 S/C 5.0L Petrol, Removal and Installation).

24. Refer to: Camshaft RH (303-01B Engine - V8 S/C 5.0L Petrol, Removal and Installation).

25. Connect the battery ground cable.
Refer to: Specifications (414-00 Battery and Charging System - General Information, Specifications).

2012.0 RANGE ROVER (LM), 303-01

ENGINE – V8 S/C 5.0L PETROL

DESCRIPTION AND OPERATION

EXTERNAL VIEW

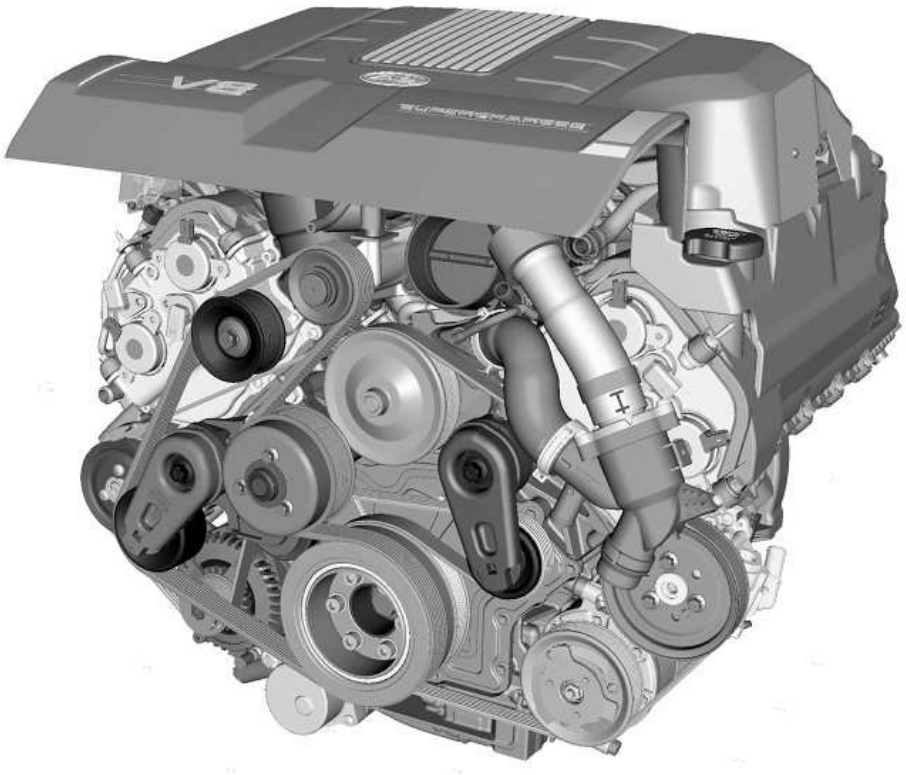

E118639

INTRODUCTION

The 5.0L SC (supercharger) gasoline engine is a liquid cooled V8 unit featuring direct fuel injection, four overhead camshafts and four valves per cylinder. All four camshafts incorporate VCT (variable camshaft timing).

The main structural components of the engine are all manufactured from aluminum alloy. The engine is built around a very stiff, lightweight, enclosed V, deep skirt cylinder block. A structural windage tray is bolted to the bottom of the cylinder block to further improve the block stiffness, minimize NVH (noise, vibration and harshness) and help reduce oil foaming. To further enhance the stiffness of the lower engine structure, a heavily ribbed sump is installed. The sump also helps to reduce engine noise. A transverse hole is incorporated into the sump to accommodate the RH (right-hand) front drive halfshaft.

Engine Structure

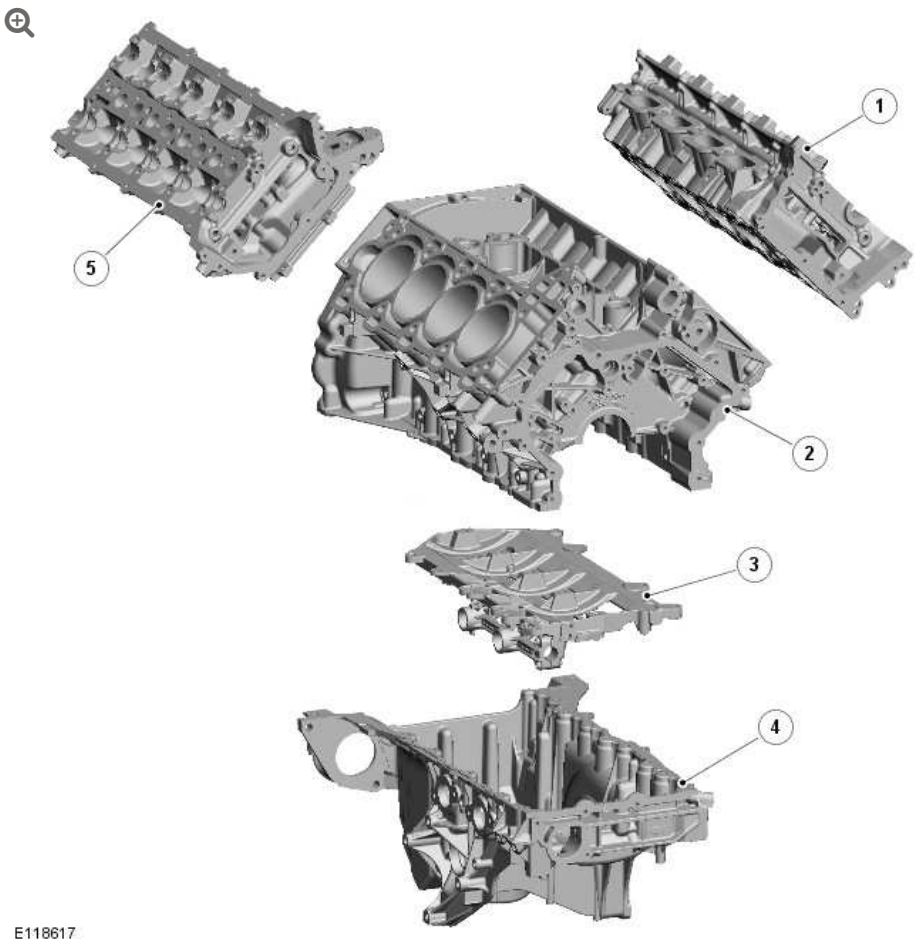

ITEM	DESCRIPTION
1	LH (left hand) cylinder head (bank B)
2	Cylinder block
3	Windage tray
4	Sump
5	RH (right hand) cylinder head (bank A)

CYLINDER BLOCK

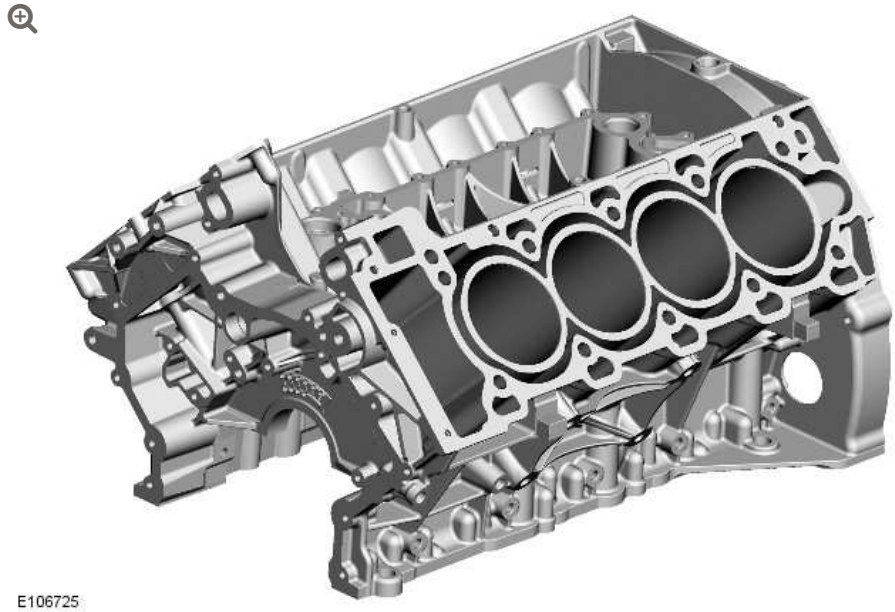

The cylinder block is a 90 degree configuration with cast-in iron cylinder liners and an open deck die-cast coolant jacket. The low volume coolant jacket gives good warm-up times and low piston noise levels. The longitudinal flow design of the coolant jacket, with a single cylinder head coolant transfer port in each bank, provides good rigidity and head gasket sealing.

Cylinder Numbering

ISO standard cylinder numbering

NOTE:

Front of engine is at No.1 cylinder.

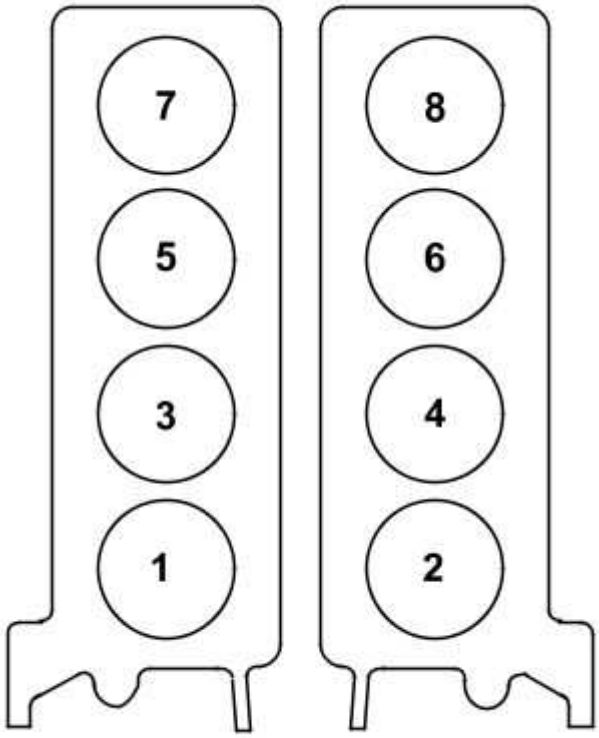

E133972

ISO standard cylinder firing order 1,2,7,3,4,5,6,8

Engine Data Location

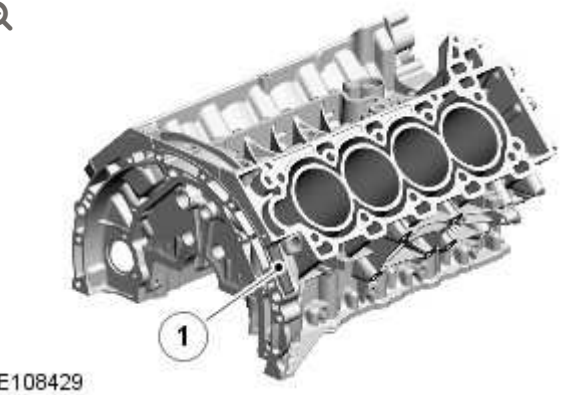

E108429

ITEM	DESCRIPTION
1	Engine data location

CRANKSHAFT

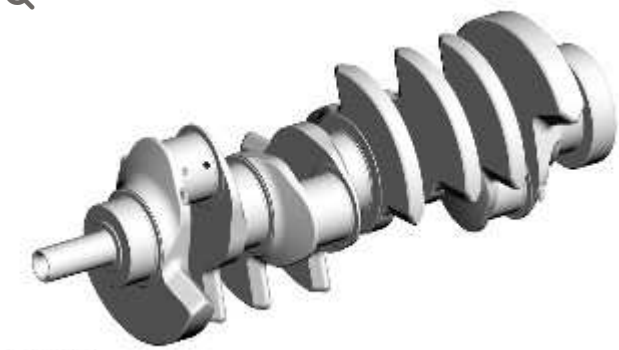
E106729

The crankshaft is made from spheroidal graphite cast iron, which, compared with grey cast iron, has higher mechanical strength, ductility and increased shock resistance. The undercut and rolled fillets also improve strength. Eight counter-balance weights ensure low vibration levels and the large, cross-drilled main bearing journals are designed to contribute to stiffness.

An oil groove in the upper half of each main bearing transfers the oil into the crankshaft for lubrication of the connecting rod bearings. A thrust washer is installed each side of the top half of the center main bearing.

Crankshaft Data Location

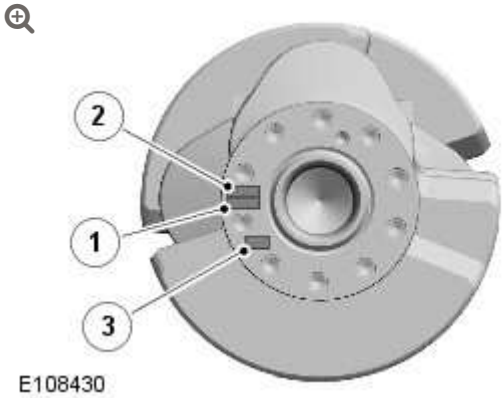

E108430

ITEM	DESCRIPTION

ITEM	DESCRIPTION
1	Pin journal classification and plant identification
2	Main journal classification
3	Date and time codes

The main bearings are numbered 1 to 5 starting from the front of the engine. There are five grades of main bearing available, each being color coded. Journal sizes are marked on the rear of the crankshaft. For additional information, refer to: Crankshaft End Play (303-00 Engine System - General Information, General Procedures).

Crankshaft Installation

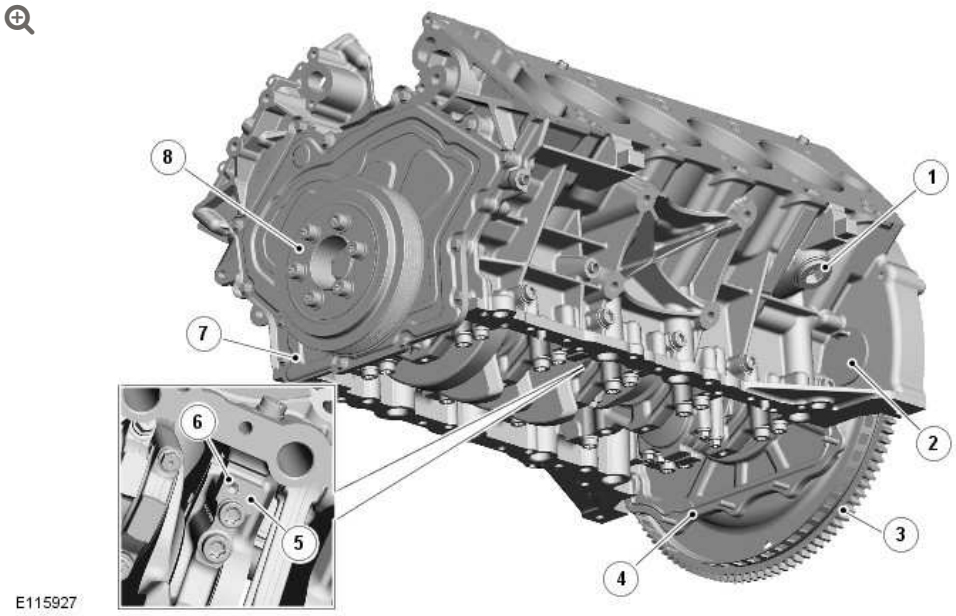

ITEM	DESCRIPTION
1	Coolant drain plug
2	Torque converter access plug
3	Drive plate
4	Rear cover
5	Main bearing cap
6	Identification mark

ITEM	DESCRIPTION
7	Front cover
8	Front pulley

The main bearing caps are made from cast iron and are cross bolted to increase rigidity. An identification mark on the bearing cap faces the front of the engine.

At the front of the crankshaft, a tuned torsional vibration damper is incorporated into the crankshaft front pulley. At the rear of the crankshaft a pressed steel drive plate, with a steel starter ring gear, is installed to transfer drive from the engine to the transmission. The reluctor ring for the CKP (crankshaft position) sensor is integrated into the perimeter of the drive plate.

The crankshaft seals are located in the front and rear covers.

PISTONS AND CONNECTING RODS



E116028

The diameter of each piston is graded and precisely matched to each cylinder bore to help reduce noise. In the vertical plane, the pistons have a slight barrel form, which helps to ensure a reliable oil film is maintained between the piston and the cylinder bore. A solid film lubricant coating is applied to both reaction faces of the piston to reduce wear and improve fuel economy.

A three-ring piston-sealing system is used. The steel top ring is treated with a PVD (physical vapor deposition) peripheral coating. PVD is a coating technique where material can be deposited with improved properties to ensure good cylinder bore compatibility and wear resistance. A Napier center ring helps cylinder pressure and oil management, while the three-piece oil control lower ring is produced from nitrided steel.

The pistons are cooled with engine oil from four piston cooling jets installed under the valley of the cylinder block. Each piston cooling jet sprays oil onto the underside of the two adjacent pistons, one from each cylinder bank.

The connecting rods are forged from high strength steel. The cap is fracture-split from the rod to ensure precision re-assembly for bearing shell alignment. There are three grades of large end bearing available, each being color coded.
For additional information, refer to: Connecting Rod Large End Bore (303-00 Engine System - General Information, General Procedures).

Cap Alignment with Connecting Rod

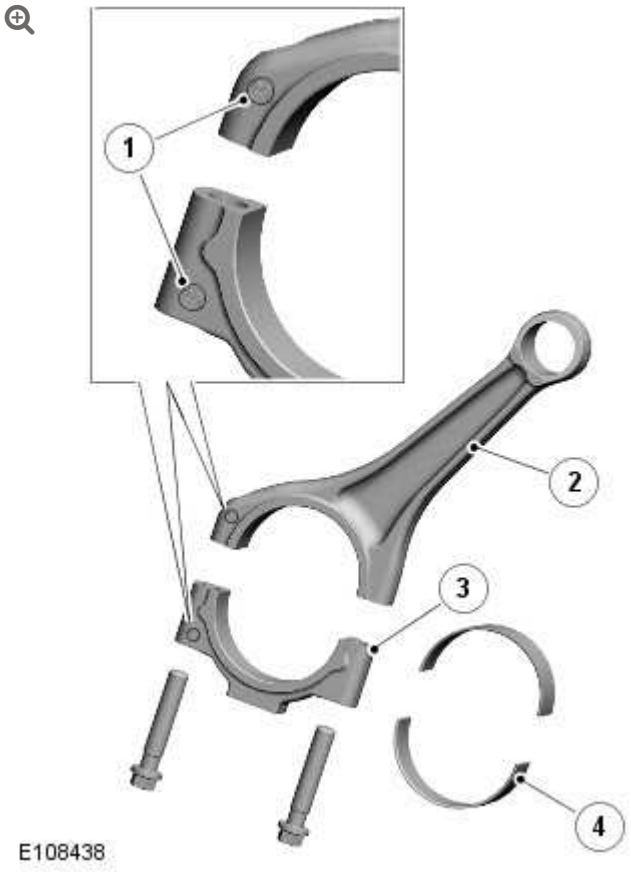

ITEM	DESCRIPTION
1	Alignment marks
2	Connecting rod

ITEM	DESCRIPTION
3	Cap
4	Bearings

The correct alignment of the cap with the connecting rod is indicated by marks on adjacent faces of the two components.

Connecting Rod and Piston Orientation

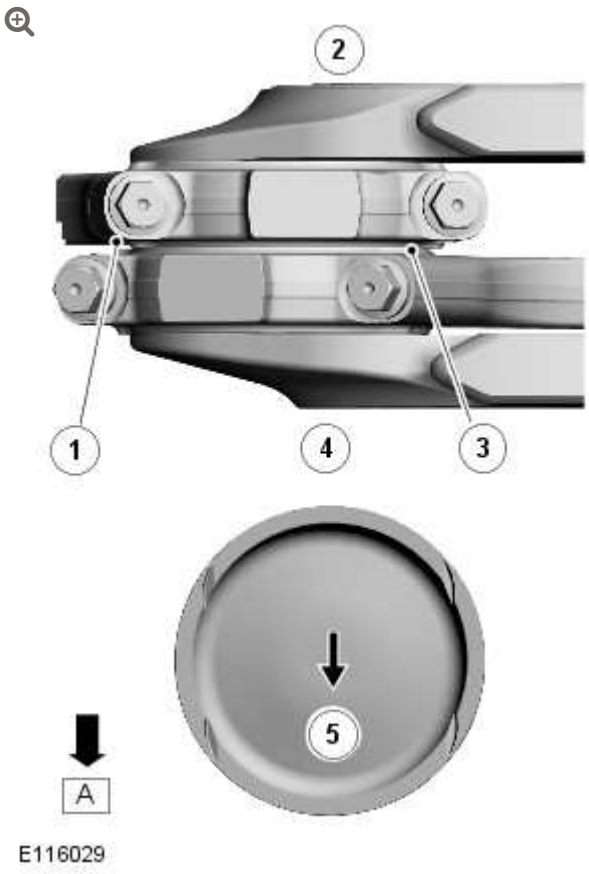

ITEM	DESCRIPTION
A	Front of engine
1	Alignment mark
2	LH side (bank B)
3	Alignment mark
4	RH side (bank A)
5	Piston orientation arrow

The orientation of the connecting rods and pistons on the crankshaft are given below:

- Bank A - The arrow on the piston crown must face the front of the engine and the cap and connecting rod alignment marks must face the rear of the engine.
- Bank B - The arrow on the piston crown must face the front of the engine and the cap and connecting rod alignment marks must face the front of the engine.

CYLINDER HEADS

NOTE:

RH (A bank) cylinder head shown, LH (left-hand) (B bank) cylinder head similar.

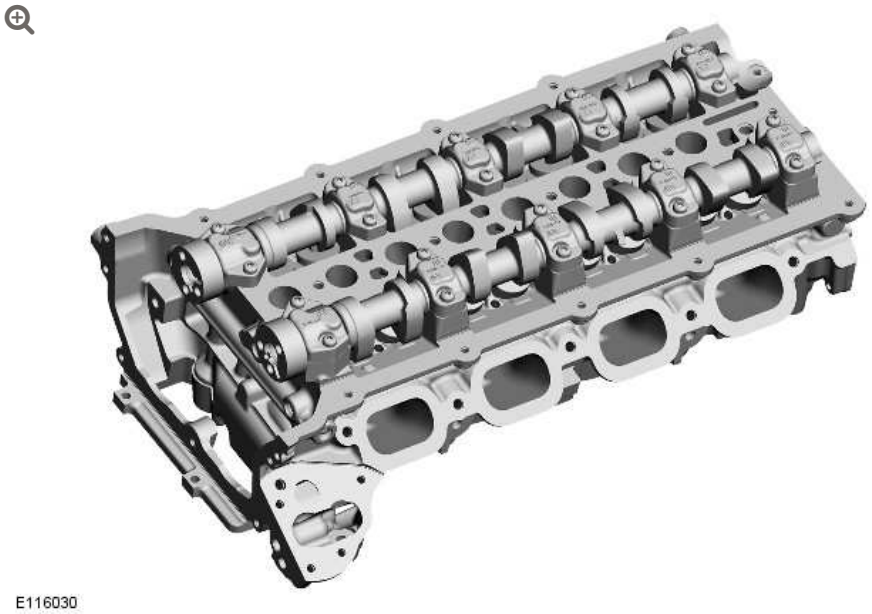

The cylinder heads are manufactured in gravity die cast aluminum alloy and are unique for each cylinder bank. Deep-seated bolts reduce distortion and secure the cylinder heads to the cylinder block.

Each cylinder is served by four valves. To help achieve the required gas-flow characteristics, these are arranged asymmetrically around the cylinder bore. Each cylinder has a centrally mounted fuel injector and spark plug.

The cylinder head gasket is of a multi-layer steel construction.

EXHAUST MANIFOLD

NOTE:

LH (B bank) installation shown, RH (A bank) installation similar.

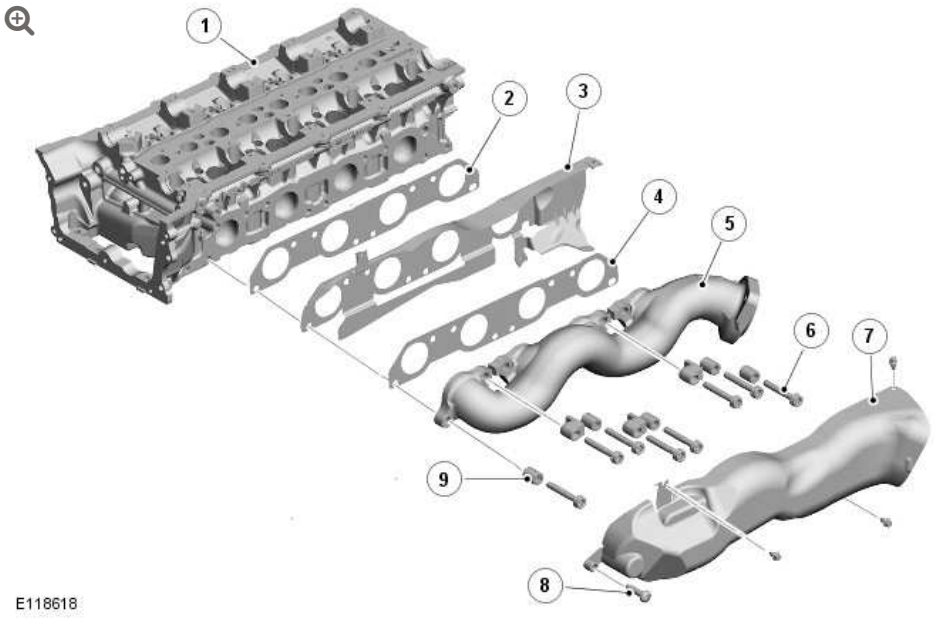

ITEM	DESCRIPTION
1	Cylinder head
2	Gasket
3	Heat shield
4	Gasket
5	Exhaust manifold
6	Bolt (8 off)

ITEM	DESCRIPTION
7	Heat shield
8	Bolt (4 off)
9	Spacer (8 off)

The high SiMo (silicon molybdenum) cast iron exhaust manifolds are unique for each cylinder bank. Each exhaust manifold installation includes two metal gaskets and two heat shields. Spacers on the securing bolts allow the manifolds to expand and contract with changes of temperature while maintaining the clamping loads.

VALVE TRAIN

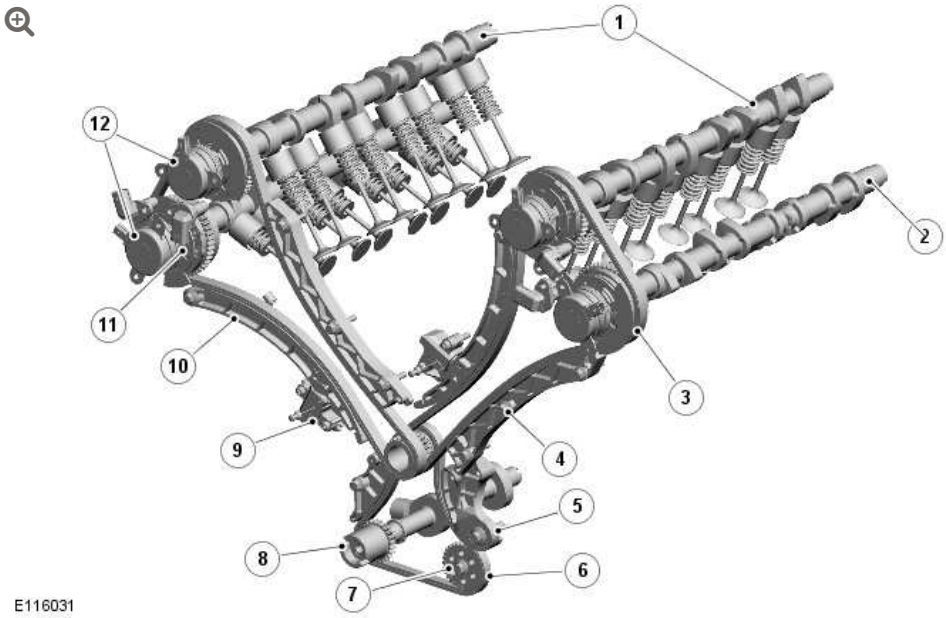

ITEM	DESCRIPTION
1	Inlet camshafts
2	Exhaust camshaft
3	Inverted tooth timing chain
4	Nylon chain guide
5	Auxiliary chain tensioner

ITEM	DESCRIPTION
6	Auxiliary drive chain
7	Oil pump drive
8	Auxiliary drive camshaft
9	Timing chain tensioner
10	Tensioner lever
11	VCT unit
12	VCT solenoids

The lightweight valve train provides good economy and noise levels and is chain driven from the crankshaft.

Double overhead camshafts on each cylinder head operate the valves. For each cylinder head, an inverted tooth timing chain transfers drive from the crankshaft to the VCT unit on the front of each camshaft. Graded tappets enable setting of inlet and exhaust valve clearances.

Each timing chain has a hydraulic tensioner operated by engine oil pressure. The chain tensioners incorporate a ratchet mechanism, which maintains tension while the engine is stopped to eliminate start-up noise. The chains are lubricated with engine oil from jets located at the front of the engine block. Nylon chain guides control chain motion on the drive side.

VARIABLE CAMSHAFT TIMING

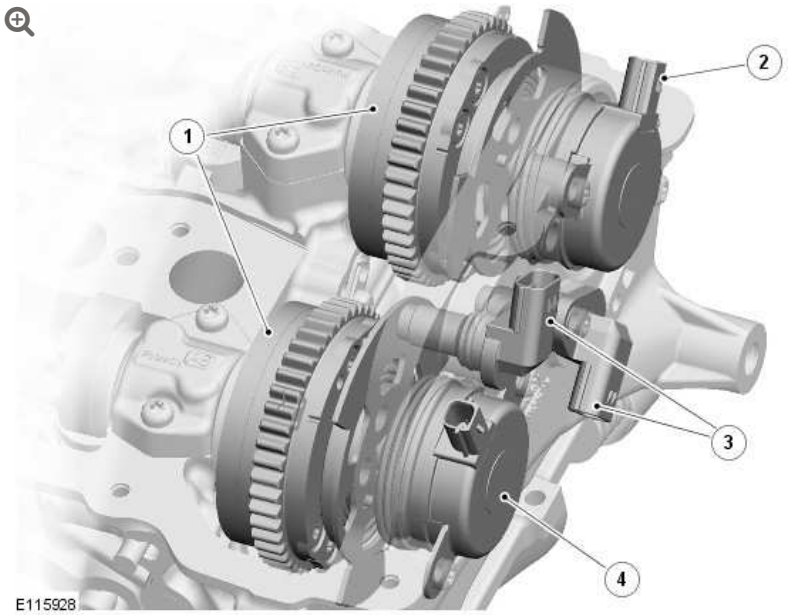

ITEM	DESCRIPTION
1	VCT units
2	Intake camshaft VCT solenoid
3	Camshaft position sensors
4	Exhaust camshaft VCT solenoid

The VCT system varies the timing of the intake and exhaust camshafts to deliver optimum engine power, efficiency and emissions. The timing of the intake camshafts has a range of 62 degrees of crankshaft angle. The timing of the exhaust camshafts has a range of 50 degrees of crankshaft angle.

In the base timing position:

- The intake camshafts are fully retarded.
- The exhaust camshafts are fully advanced.

VCT Operating Ranges

CAMSHAFT	VALVE OPENS	VALVE CLOSES

CAMSHAFT	VALVE OPENS	VALVE CLOSES
Intake	29 degrees BTDC (before top dead center) to 33 degrees ATDC (after top dead center)	207 to 269 degrees ATDC
Exhaust	244 to 194 degrees BTDC	6 to 56 degrees ATDC

The system consists of a VCT unit and a VCT solenoid for each camshaft. The ECM (engine control module) controls the system using PWM (pulse width modulation) signals to the VCT solenoids.

The torsional energy generated by the valve springs and the inertia of the valve train components are used to operate the system.

Variable Camshaft Timing Units

The VCT units change the position of the camshafts in relation to the timing chains.

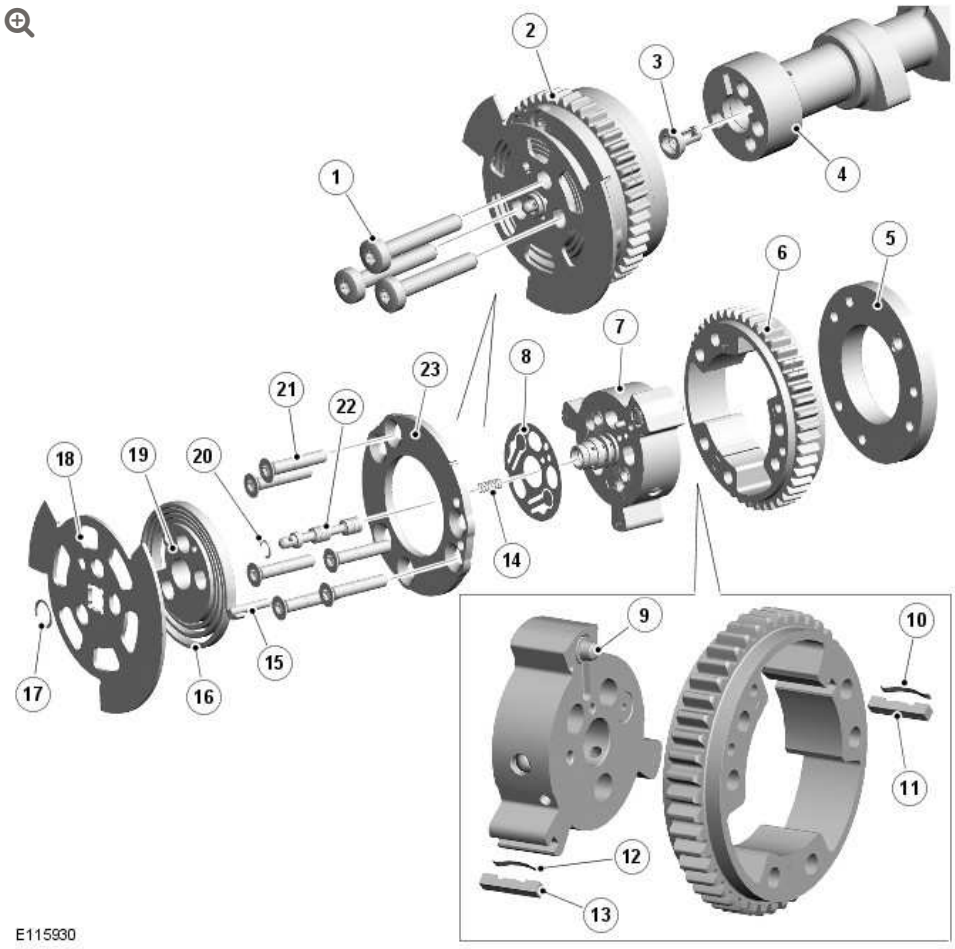

ITEM	DESCRIPTION
1	Bolt (3 off)
2	VCT unit
3	Filter
4	Camshaft
5	Inner plate
6	Housing and sprocket
7	Rotor assembly
8	Reed plate
9	Spring and lock pin
10	Spring (3 off)
11	Tip seal (3 off)
12	Spring (2 off)

ITEM	DESCRIPTION
13	Tip seal (2 off)
14	Spring
15	Dowel pin
16	Bias spring
17	Snap ring
18	Reluctor ring
19	Center plate
20	Snap ring
21	Screw (6 off)
22	Spool valve
23	Outer plate

Each VCT unit is attached to the camshaft by three bolts. A rotor assembly and a reed plate are installed inside a sprocket housing, which consists of a sprocket, an outer plate and an inner plate held together by six screws.

A reluctor ring, for the CMP (camshaft position) sensor, a center plate and a bias spring are installed at the front of the VCT unit. The ends of the bias spring locate on the center plate assembly and the sprocket housing, to give a turning moment to the camshaft in the advance direction. A snap ring locates the reluctor ring on to a sleeve installed in the center of the rotor assembly. The opposite end of the sleeve locates in a bore in the front face of the camshaft, which contains a filter.

A spring and spool valve are installed in the rotor assembly sleeve and retained by a snap ring. The spring keeps the spool valve in contact with the armature of the related VCT solenoid.

Each VCT unit is supplied with engine oil from an oil gallery in the cylinder head, through the camshaft front bearing cap and a bore in the center of the camshaft.

Variable Camshaft Timing Solenoids

The VCT solenoids control the position of the spool valves in the VCT units.

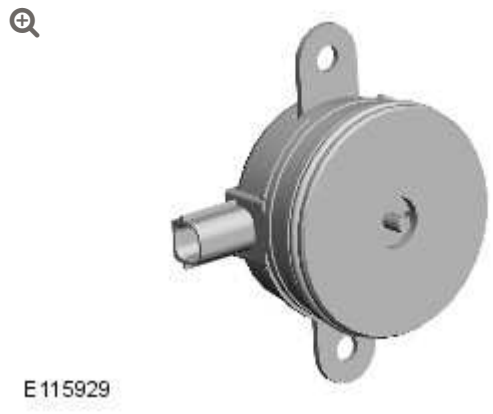

The VCT solenoids are installed in the front upper timing covers, immediately in front of their related VCT units. Each VCT solenoid is secured with two screws and sealed with an O-ring. A two pin electrical connector provides the interface with the engine harness.

Each VCT solenoid incorporates a spindle that acts on the spool valve in the related VCT unit to advance and retard the camshaft timing. The VCT solenoids operate independently and are controlled by a PWM signal from the ECM.

Variable Camshaft Timing Operation

When the engine is running, the compression and expansion of the valve springs causes momentary increases and decreases in the torque acting on the camshafts. These momentary changes of torque are sensed in the VCT units and used to change the camshaft timing.

Camshaft Torsional Energy (For a Single Valve Event)

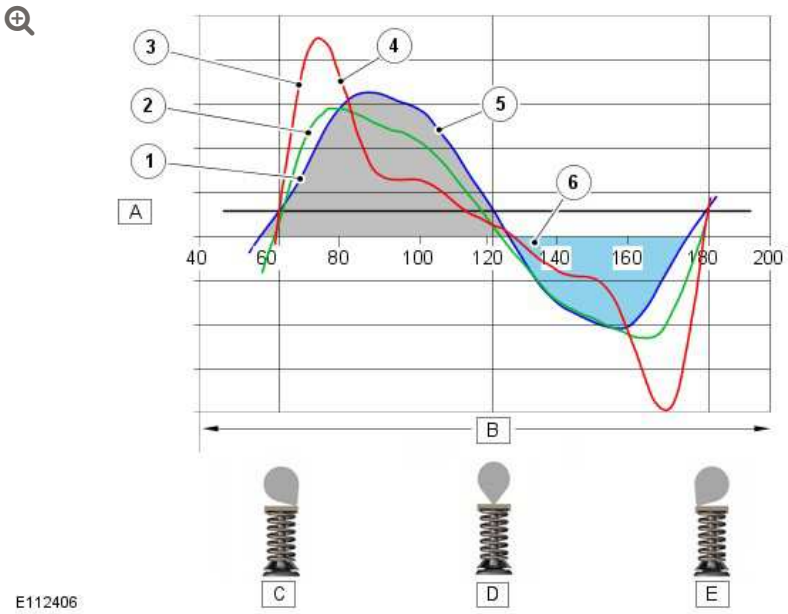

ITEM	DESCRIPTION
A	Camshaft torque
B	Camshaft rotation (degrees)
C	Valve opening
D	Peak lift
E	Valve closing
1	1000 rev/min
2	4000 rev/min
3	7000 rev/min
4	Inertia effects from valve train rotating components
5	Force caused by valve spring
6	Bias torque from friction

Variable Camshaft Timing Unit Schematic - Base Timing

NOTE:

Intake camshaft VCT unit shown. For exhaust camshaft VCT unit, read advance for retard and retard for advance.

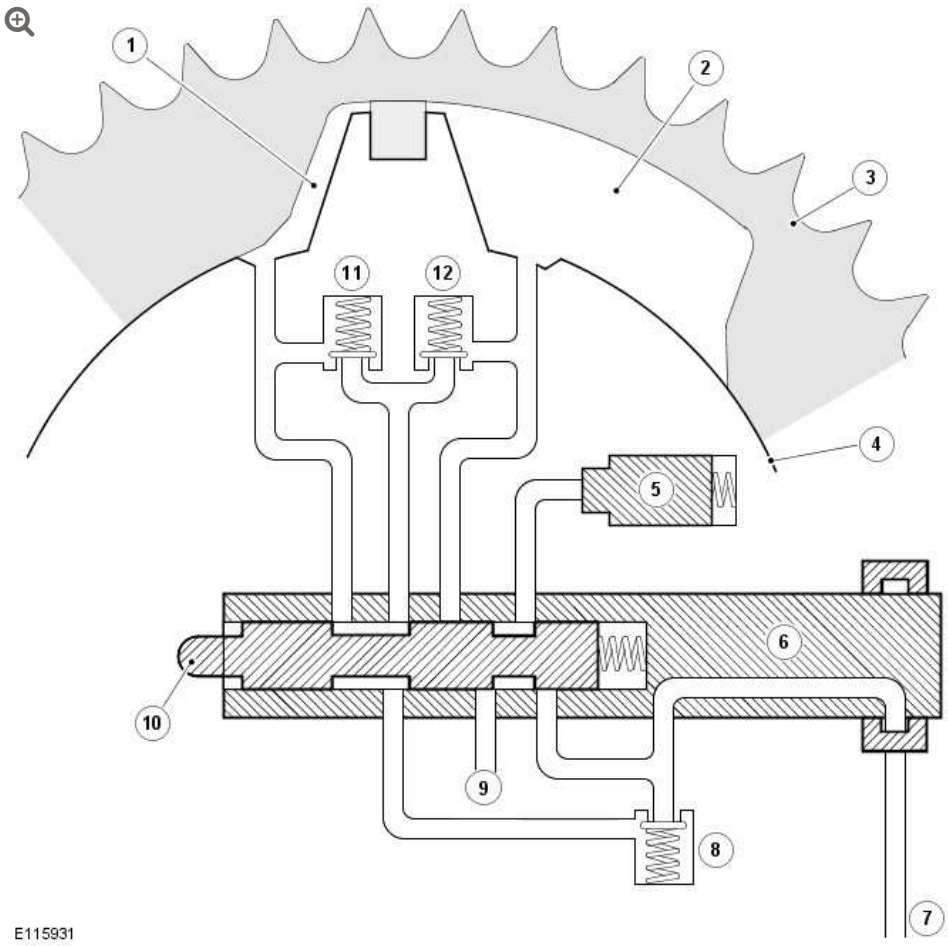

ITEM	DESCRIPTION
1	Advance chamber
2	Retard chamber
3	Sprocket housing
4	Rotor assembly
5	Lock pin
6	Sleeve
7	Engine oil supply from camshaft

ITEM	DESCRIPTION
8	Inlet check valve
9	Lock pin drain
10	Spool valve
11	Advance check valve
12	Retard check valve

At engine start-up, once the engine oil pressure in the camshaft is sufficient to open the inlet check valve, engine oil flows across the spool valve, through the advance and retard check valves and into the advance and retard chambers. During the start cycle, the ECM signals the VCT solenoid to move the spool valve into the sleeve and connect the lock pin to inlet oil pressure. The inlet oil pressure causes the lock pin to retract from the inner plate and unlock the rotor assembly and camshaft from the sprocket housing.

There is a constant supply of oil to the VCT to ensure the unit remains filled during operation.

Variable Camshaft Timing Unit Schematic - Advance

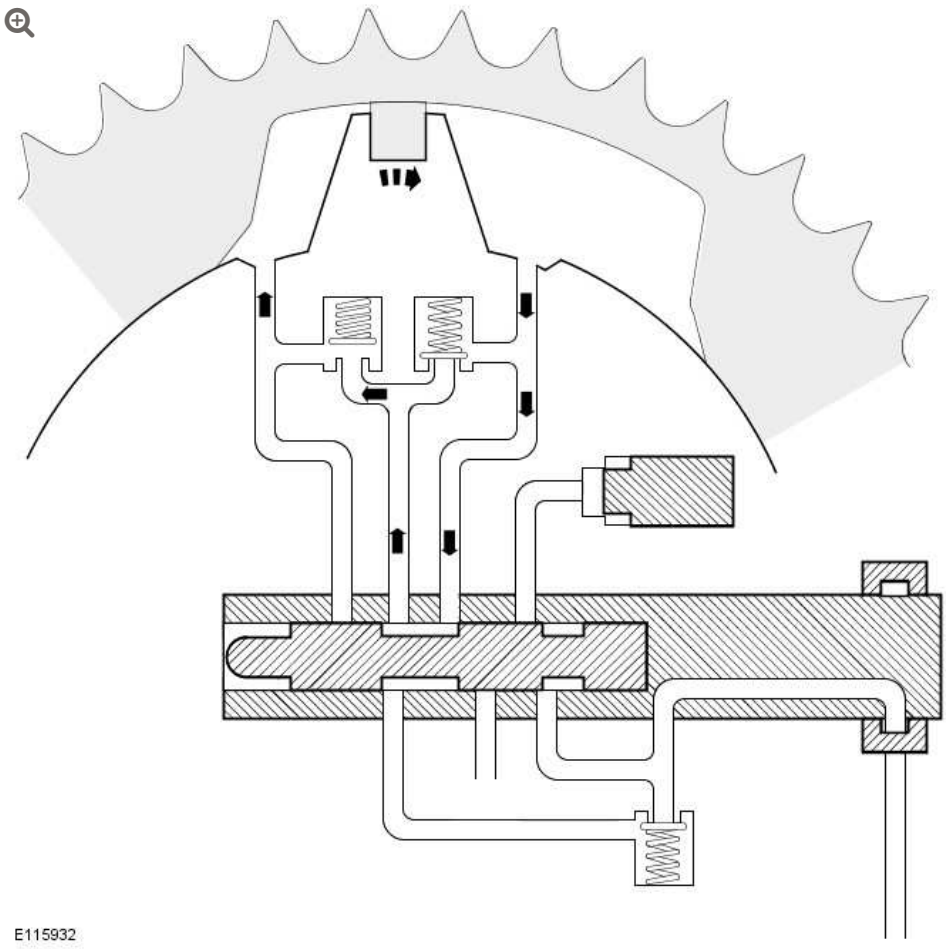

To advance the camshaft timing, the ECM adjusts the signal to the VCT solenoid to move the spool valve so that the advance chamber oil passage is closed and the retard chamber oil passage is connected to inlet oil.

Each momentary increase of the torque acting on the camshaft generates a pressure pulse in the retard chamber. Oil moves from the retard chamber, through the spool valve and the advance check valve to the advance chamber, to equalize the pressures in the two chambers. The displacement of oil from the retard chamber causes the rotor assembly to advance in relation to the sprocket housing. Each momentary decrease of torque acting on the camshaft also generates a pressure pulse in the advance chamber, but, with the advance chamber oil passage closed, no movement of oil between the advance and retard chambers occurs and the rotor assembly cannot move in the retard direction.

Variable Camshaft Timing Unit Schematic - Null

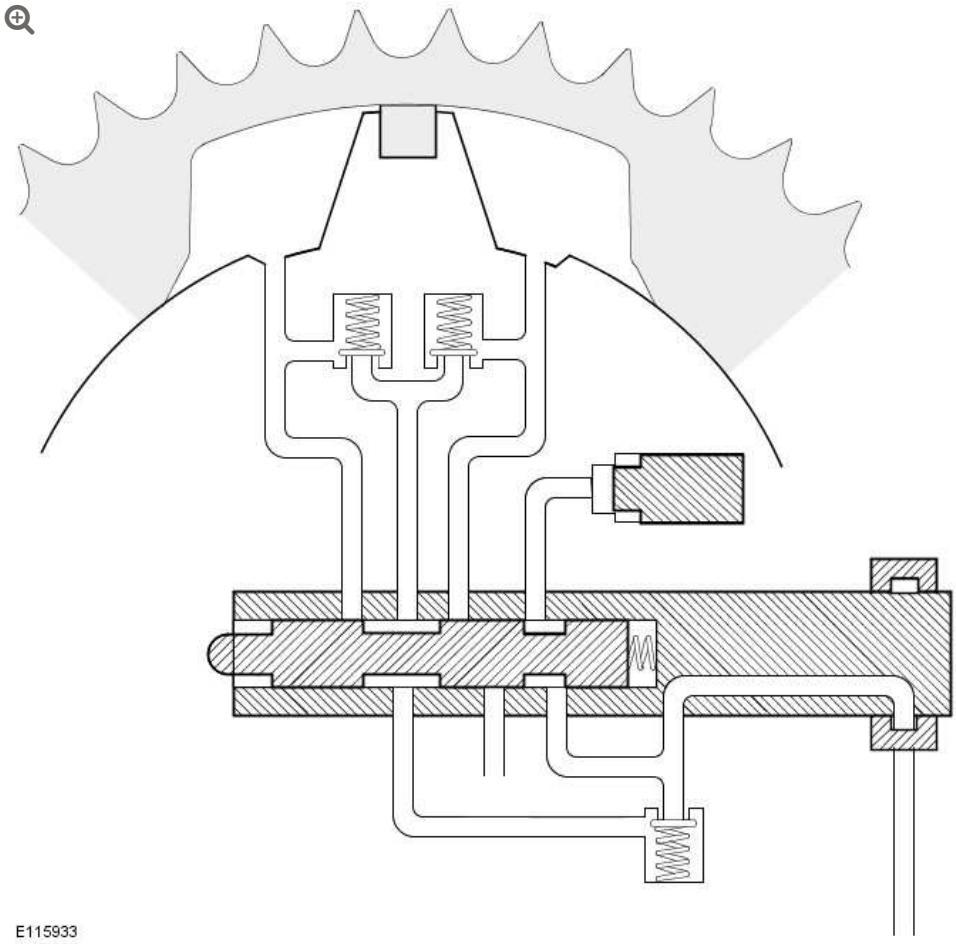

Once the camshaft has reached the required timing position the ECM adjusts the signal to the VCT solenoid to set the spool valve in the null position. In the null position, the advance and retard chamber oil passages are both closed by the spool valve and the rotor assembly is hydraulically locked to the sprocket housing.

Variable Camshaft Timing Unit Schematic - Retard

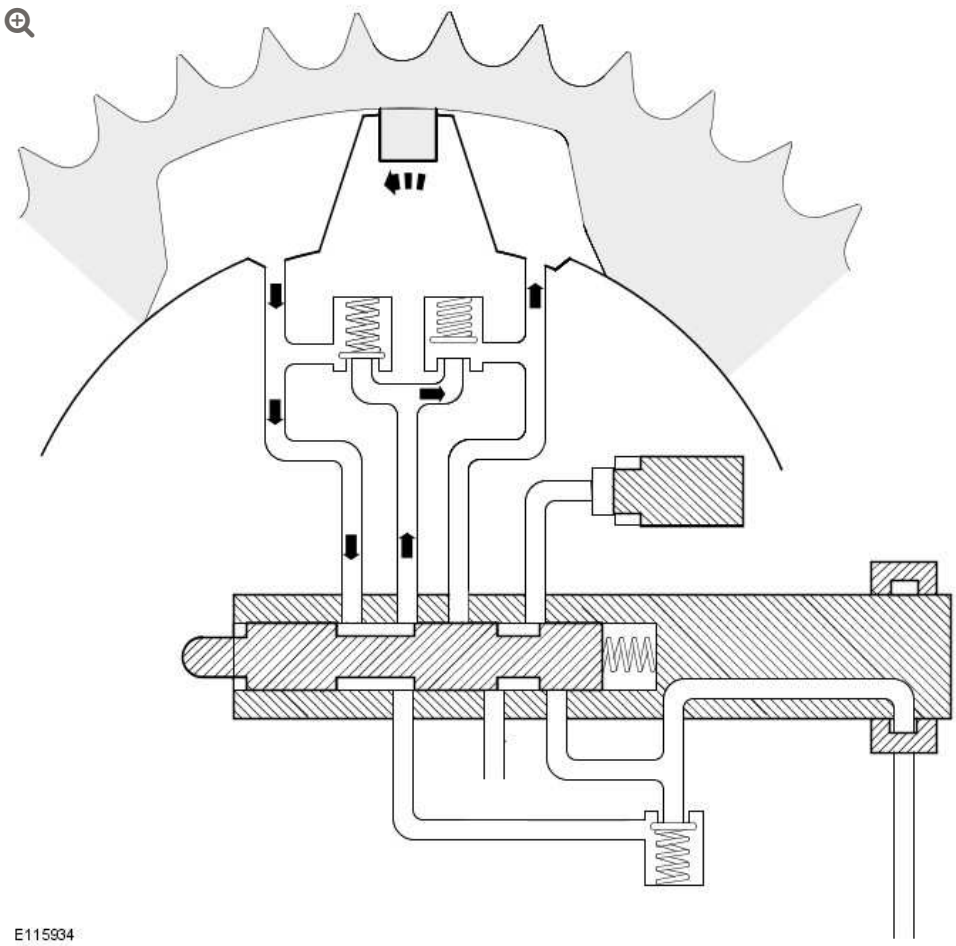

To retard the camshaft timing, the ECM adjusts the signal to the VCT solenoid to move the spool valve to close the retard chamber oil passage and connect the advance chamber oil passage to the inlet oil.

Each momentary decrease of the torque acting on the camshaft causes oil to transfer from the advance chamber, through the spool valve and the retard check valve to the retard chamber, and so retard the camshaft timing.

LUBRICATION SYSTEM

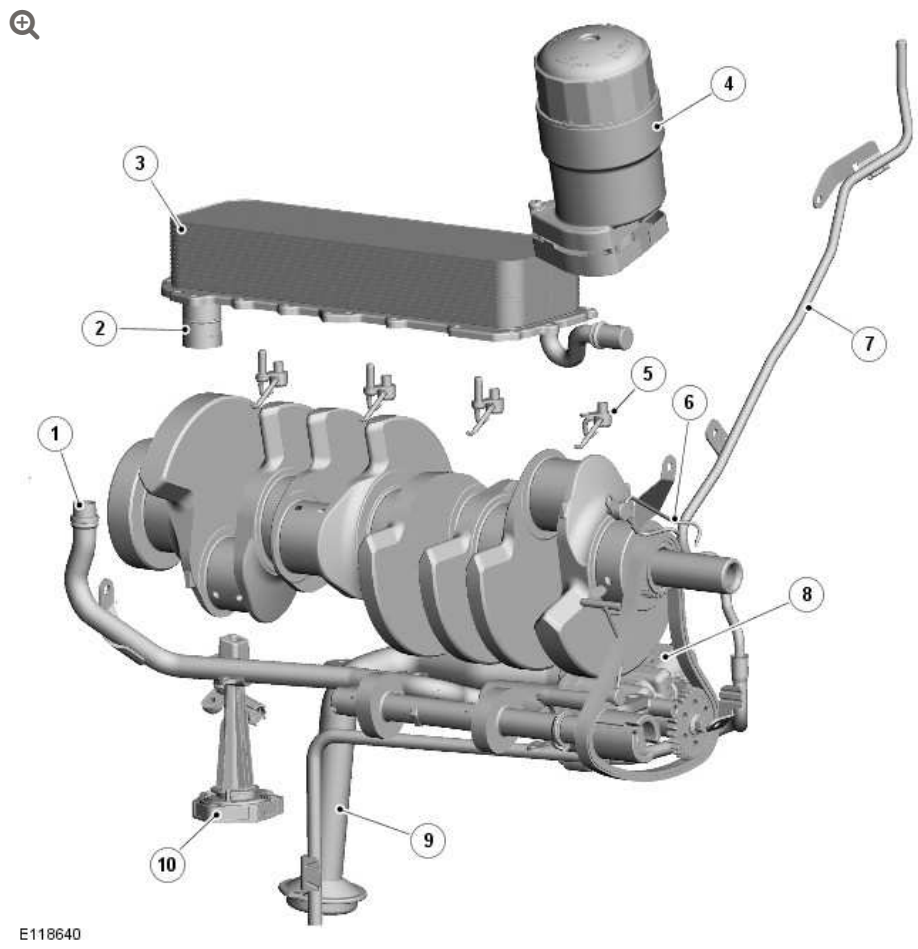

ITEM	DESCRIPTION
1	Oil pump outlet tube
2	Anti-drain valve
3	Oil cooler
4	Oil filter
5	Piston cooling jet (4 off)
6	Timing chain lubrication jet (2 off)
7	Oil evacuation tube
8	Oil pump
9	Oil pick-up
10	Oil temperature and level sensor

The oil pump is attached to the underside of the windage tray. The input shaft of the oil pump is driven from the front of the crankshaft, by the auxiliary chain, at 0.87 engine speed.

The oil pump draws oil from the sump through a centrally mounted pick-up pipe. The oil is pressurized and pumped through an output tube to the cylinder block. After passing through an anti-drain valve and a plate type oil cooler, the oil is filtered by a replaceable cartridge installed on the front of the RH cylinder head.

The output from the oil filter is distributed through oil galleries in the cylinder heads and cylinder block. All moving parts are lubricated by pressure or splash oil. Pressurized oil is also provided for the VCT system, the timing chain tensioners, the piston cooling jets and the timing chain lubrication jets.

The oil returns to the oil pan under gravity. Large drain holes through the cylinder heads and cylinder block ensure the rapid return of the oil to the sump. System replenishment is through the oil filler cap on the LH cylinder head cover.

An oil evacuation tube is installed to allow oil to be drawn from the sump. The upper end of the oil evacuation tube is located under the oil filler cap.

An oil drain plug is installed in the RH side of the sump.

Oil Pump Nominal Operating Pressures

ENGINE SPEED, REV/MIN	TEMPERATURE, °C (° F)	PRESSURE, BAR (LBF/IN^2)
Idle	20 (68)	2.0 (29.0)
1500	20 (68)	6.0 (87.0)
3000	40 (104)	6.2 (90.0)
3000	110 (230)	5.0 (72.5)
3000	130 (266)	4.0 (58.0)

ENGINE SPEED, REV/MIN	TEMPERATURE, °C (° F)	PRESSURE, BAR (LBF/IN^2)

OIL LEVEL MONITORING

Oil level monitoring is provided by an oil level and temperature sensor that measures the oil level in the sump. The oil level can be displayed in the message center of the instrument cluster.

Oil Level and Temperature Sensor

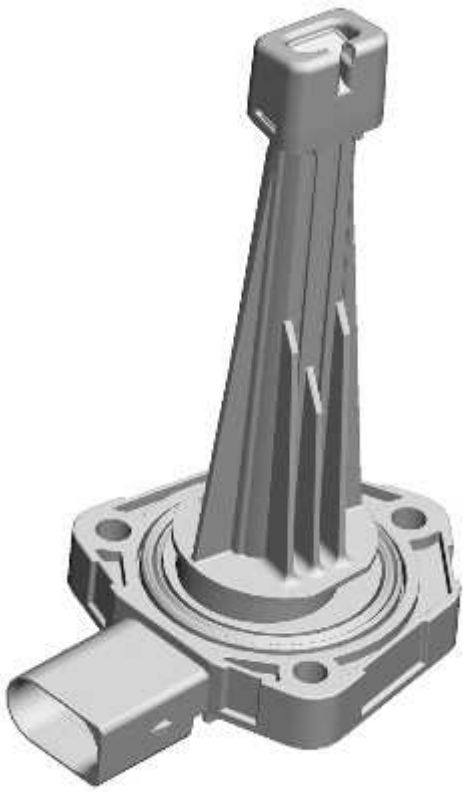

E115936

The oil level and temperature sensor supplies the ECM with a signal containing the level and temperature of the oil in the sump. The oil level and temperature sensor is secured to the bottom of the sump with three screws and sealed with a gasket.

The oil level and temperature sensor sends an ultrasonic pulse vertically upward and measures the time taken for the pulse to be reflected back from the top surface of the oil. This time is compared

with the time taken for an ultrasonic pulse to travel a reference distance within the oil level and temperature sensor to determine the oil level. The oil level reading is combined with the oil temperature reading and transmitted in a PWM signal to the ECM.

Oil Level and Temperature Sensor Specifications

FEATURE	DETAILS
Power Source	Battery Voltage
Level Accuracy	±2 mm (±0.08 in.) at temperatures of -30 °C (-22 °F)) and above; (±4 mm (±0.16 in.) at temperatures below -30 °C (-22 °F))
Temperature Accuracy	±2 °C (±3.6 °F)
Operating Level Range	116 to 147 mm (4.57 to 5.79 in.)
Operating Temperature Range	-40 to 160 °C (-40 to 320 °F)

OIL LEVEL CHECK

For additional information, refer to: Engine Oil Draining and Filling (303-01A Engine - V8 5.0L Petrol, General Procedures).

For accuracy, oil level checks should be performed with the vehicle on level ground when the oil is hot. The vehicle needs to stand for approximately 10 minutes, after the engine is switched off, to allow the oil to drain back into the sump and the oil level to stabilize. The oil level system will not give a reading until the oil level has stabilized.

To check the oil level, make sure that the ignition is on, the engine stopped and the transmission is in P (park). Access the vehicle information and settings menu, then select **Oil Level Display** from the **Service Menu**. An **Engine Oil Level** sight glass will be displayed in the message center. The current oil level will be displayed in the sight glass. One of the following messages will also be displayed:

- If the oil level is within acceptable limits, the message **OK** is displayed.
- If the oil level is less than acceptable, a message advising how much oil to add is displayed e.g. **Add 0.5 Litre Refer to handbook for oil type**, or **Add 0.5 Quart Refer to handbook for oil type**, depending on the market.
- If the message **Overfilled Refer to handbook** is displayed, the oil level must be reduced to within acceptable limits before starting the engine again.
- If the message **Not available** is displayed, the oil level is still stabilizing. Wait 10 minutes and then recheck level.

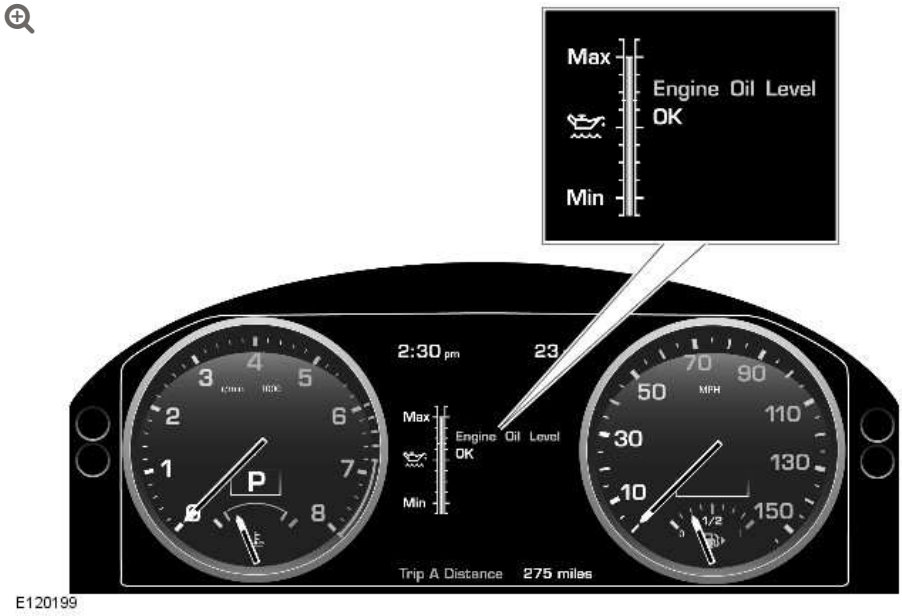

2012.0 RANGE ROVER (LM), 303-01

ENGINE – V8 S/C 5.0L PETROL

DIAGNOSIS AND TESTING

For additional information.

REFER to: Engine - V8 5.0L Petrol/V8 S/C 5.0L Petrol (303-00 Engine System - General Information, Diagnosis and Testing).

ENGINE – V8 S/C 5.0L PETROL

ENGINE (G1224612)

REMOVAL

12.41.01.99	ENGINE AND ANCILLARIES - REMOVE FOR ACCESS AND REFIT	5000 CC, AJ V8, SUPERCHARGED	10.4	USED WITHINS +

REMOVAL

SPECIAL TOOL(S)



303-1435

Engine Lifting Brackets Rear



303-1436

Engine Lifting Bracket Front

NOTE:

Some variation in the illustrations may occur, but the essential information is always correct.

All vehicles

1. Disconnect the battery ground cable.
   Refer to: Specifications (414-00 Battery and Charging System - General Information, Specifications).

2. **WARNING:**

   Make sure to support the vehicle with axle stands.

   Raise and support the vehicle.

3. Refer to: Air Conditioning (A/C) System Recovery, Evacuation and Charging - V8 5.0L Petrol/V8 S/C 5.0L Petrol

(412-00 Climate Control System - General Information, General Procedures).

4. Refer to: Transmission - V8 5.0L Petrol/V8 S/C 5.0L Petrol (307-01 Automatic Transmission/Transaxle - V8 5.0L Petrol/V8 S/C 5.0L Petrol, Removal).

5. Refer to: Cooling Fan - V8 S/C 5.0L Petrol (303-03A Engine Cooling - V8 5.0L Petrol/V8 S/C 5.0L Petrol, Removal and Installation).

6. Refer to: Cooling System Partial Draining, Filling and Bleeding - V8 S/C 5.0L Petrol (303-03A Engine Cooling - V8 5.0L Petrol/V8 S/C 5.0L Petrol, General Procedures).

7. Refer to: Front Halfshaft LH - Vehicles Without: High Performance Brakes (205-04 Front Drive Halfshafts, Removal and Installation).

8. Refer to: Front Halfshaft RH - Vehicles Without: High Performance Brakes (205-04 Front Drive Halfshafts, Removal and Installation).

9. Secure the hood in the service position.

10.

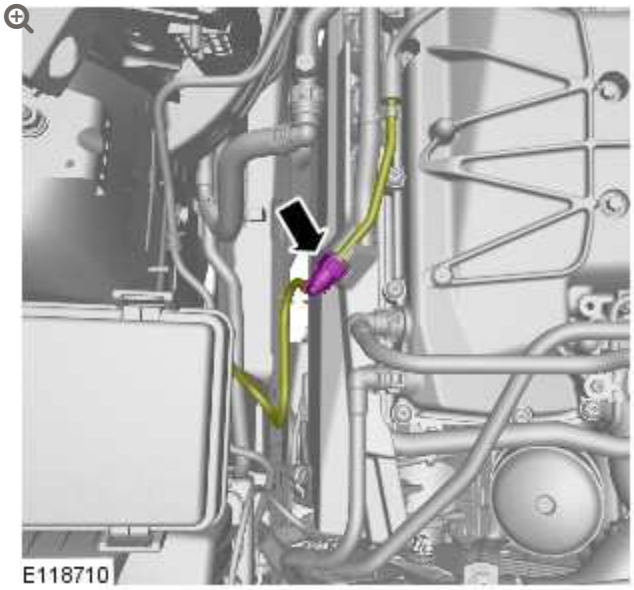

11.

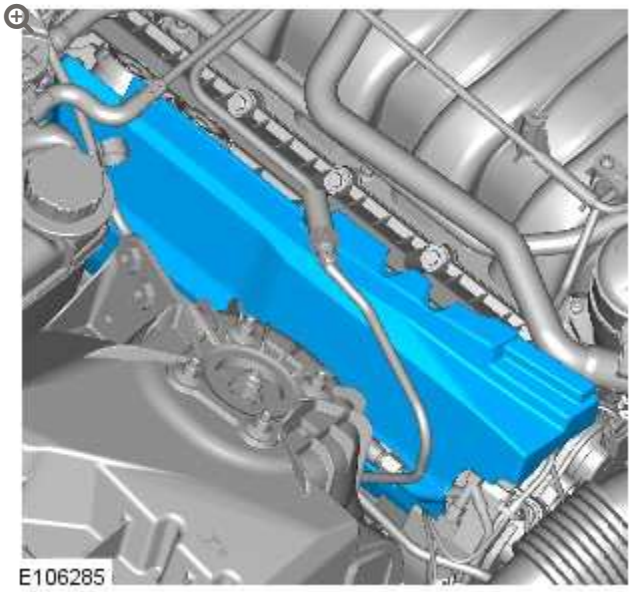

12.

WARNING:

Do not smoke or carry lighted tobacco or open flame of any type when working on or near any fuel related components. Highly flammable vapors are always present and may ignite. Failure to follow these instructions may result in personal injury.

CAUTION:

Be prepared to collect escaping fuel.

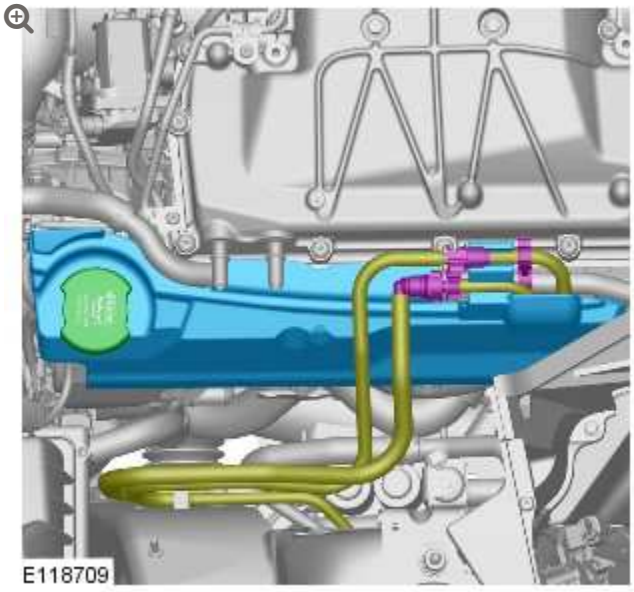

13.

CAUTION:

Be prepared to collect escaping coolant.

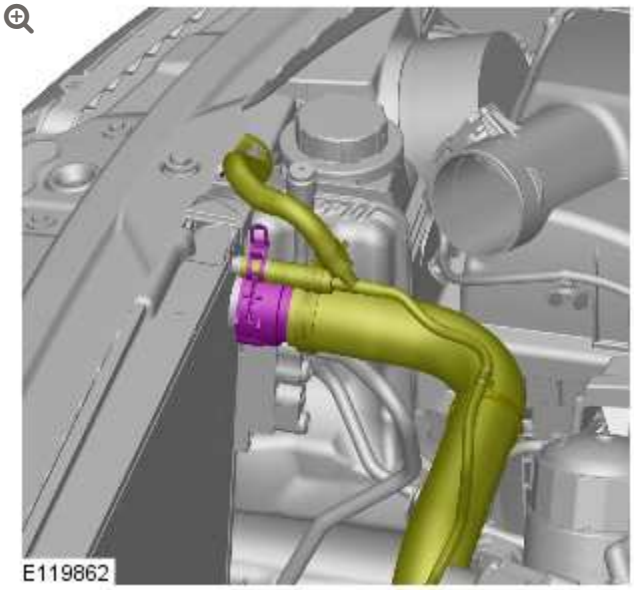

14.

WARNING:

Be prepared to collect escaping fluids.

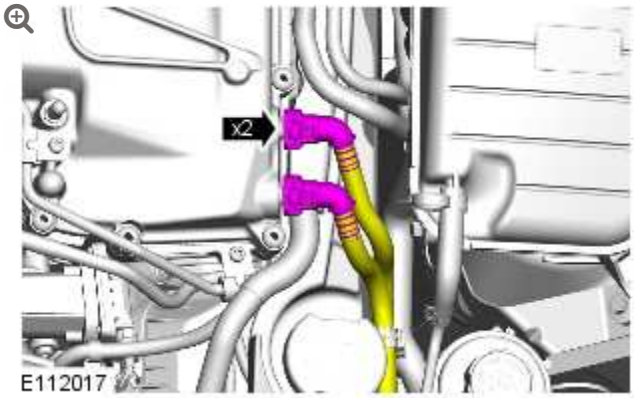

15.

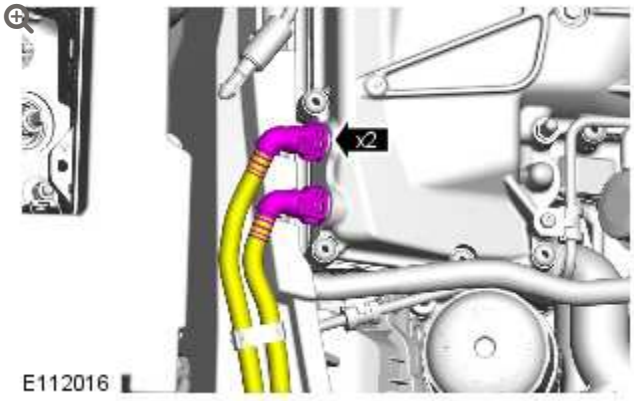

16.

CAUTION:

Be prepared to collect escaping coolant.

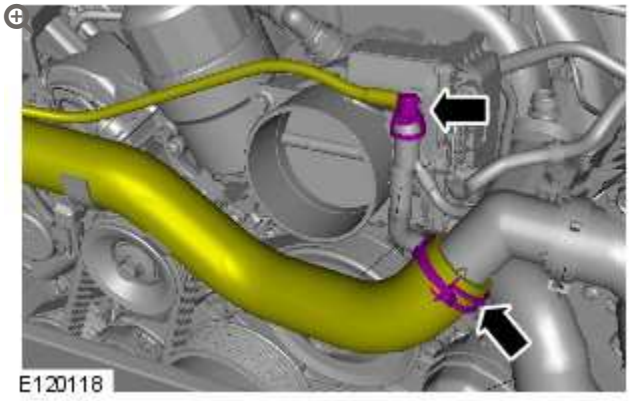

17.

CAUTION:

Be prepared to collect escaping coolant.

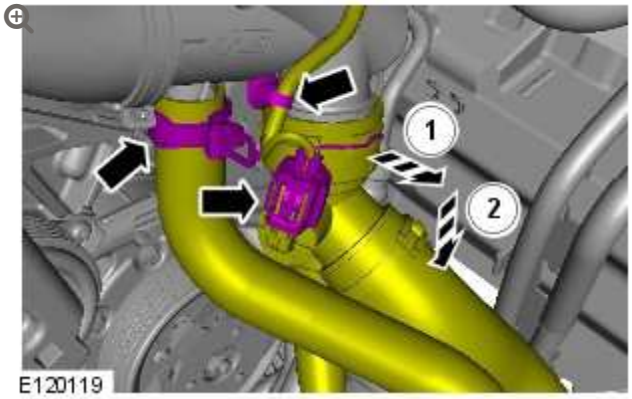

18.

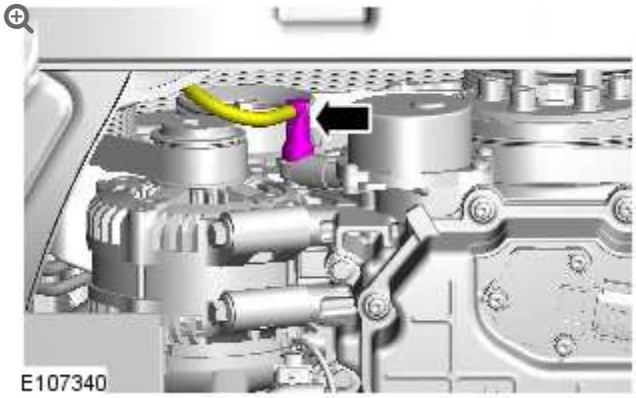

19.

CAUTION:

Make sure that all openings are sealed. Use new blanking caps.

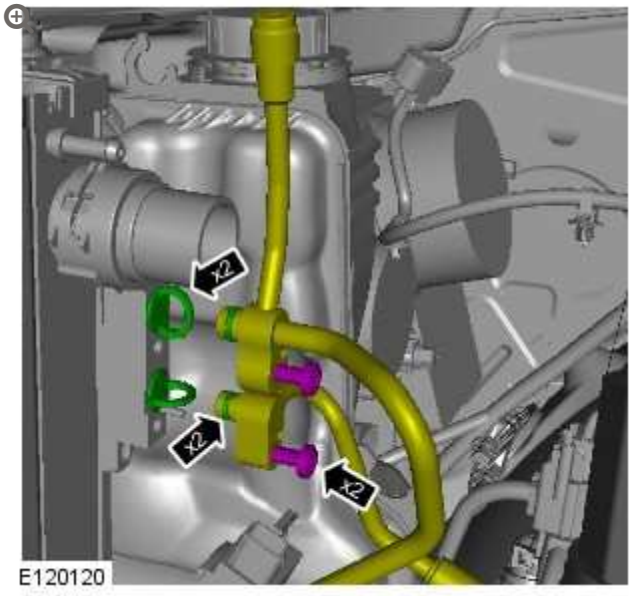

20.

CAUTION:

Make sure that all openings are sealed. Use new blanking caps.

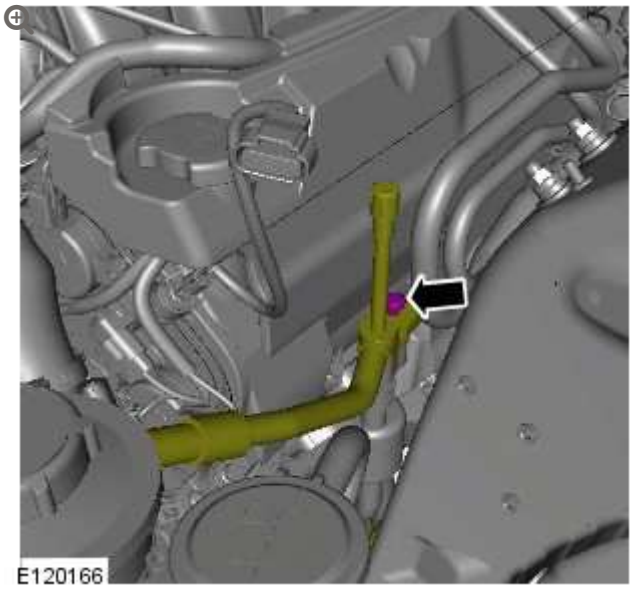

21.

NOTE:

RHD illustration shown, LHD is similar.

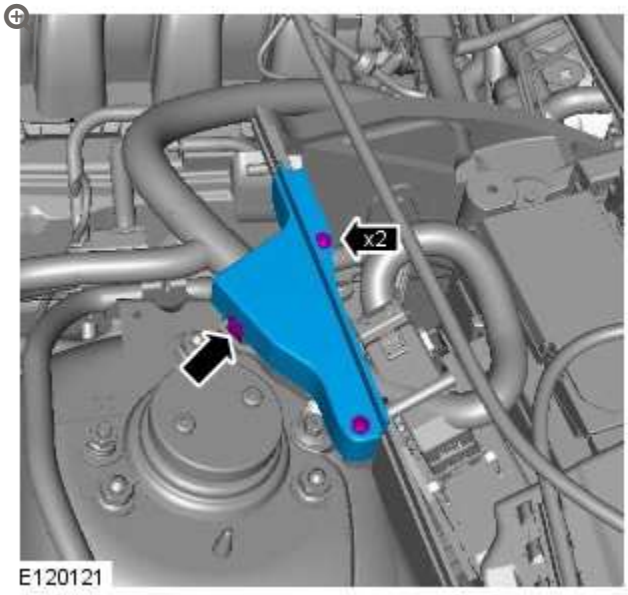

22.

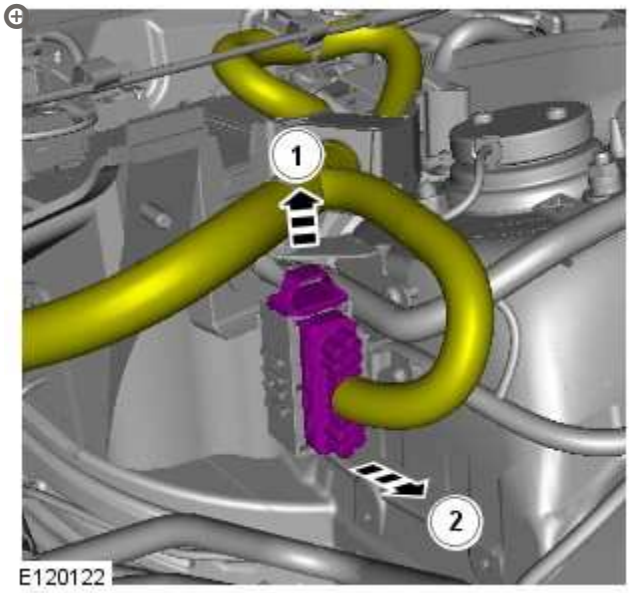

23.

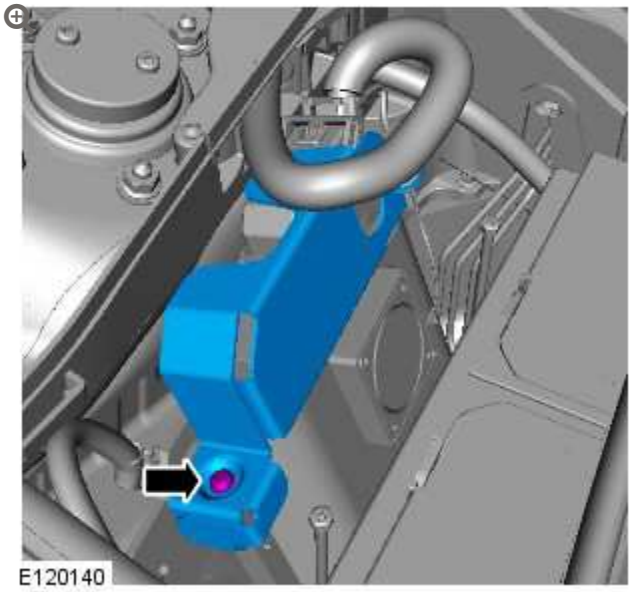

24.

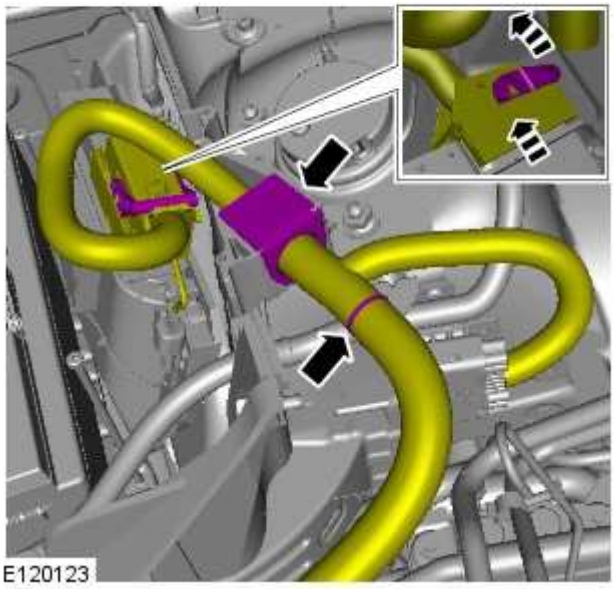

25.

CAUTION:

Be prepared to collect escaping fluids.

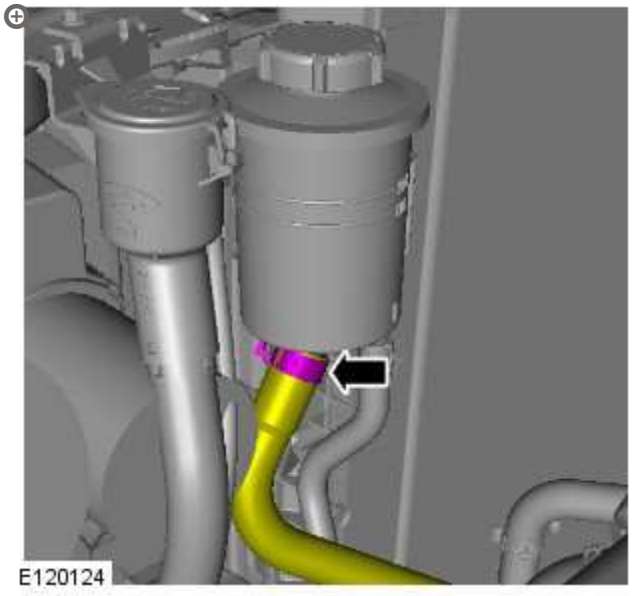

26.

CAUTION:

Install new o-ring seals

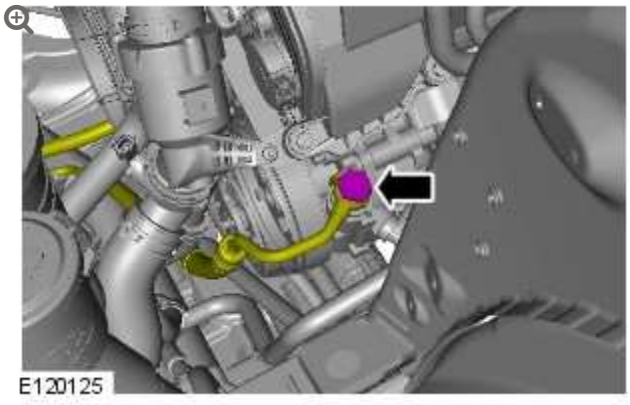

27.

CAUTION:

Be prepared to collect escaping coolant.

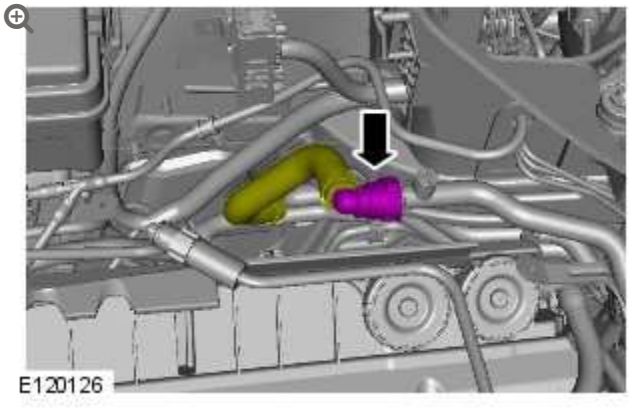

28.

CAUTION:

Be prepared to collect escaping coolant.

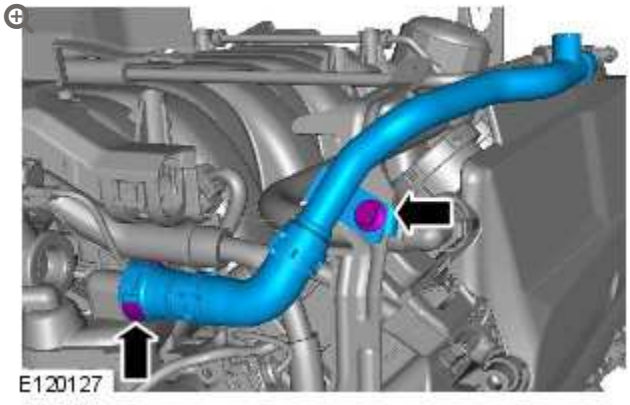

Right-hand drive vehicles

29.

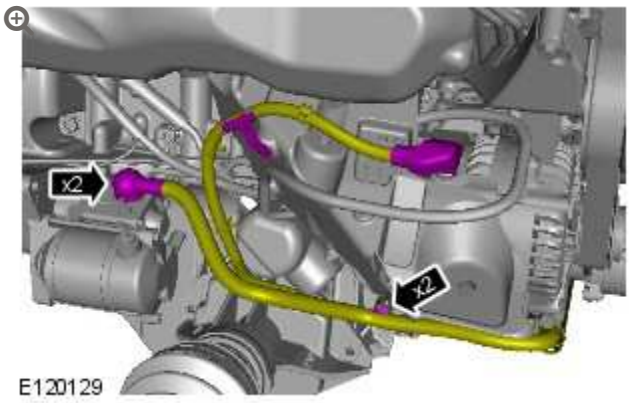

30.

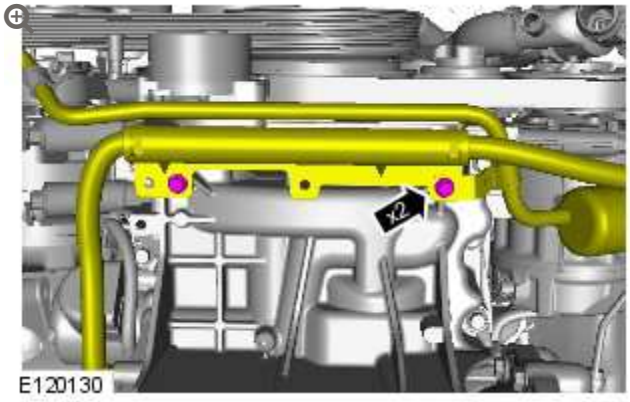

Left-hand drive vehicles

31.

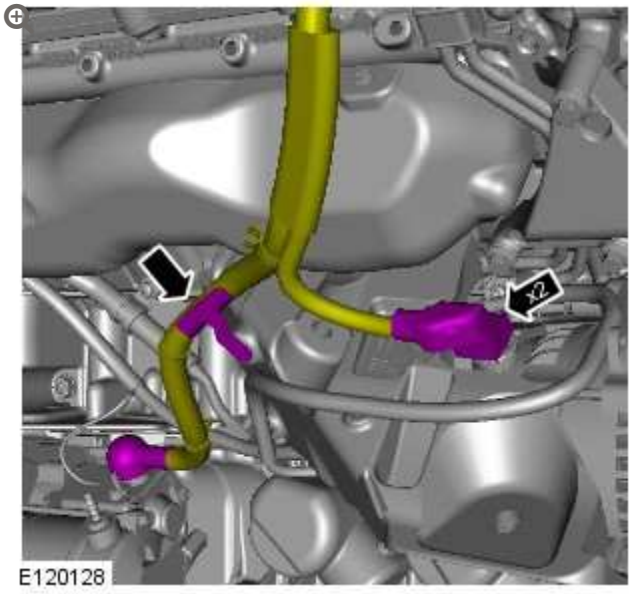

All vehicles

32.

NOTE:

RHD illustration shown, LHD is similar.

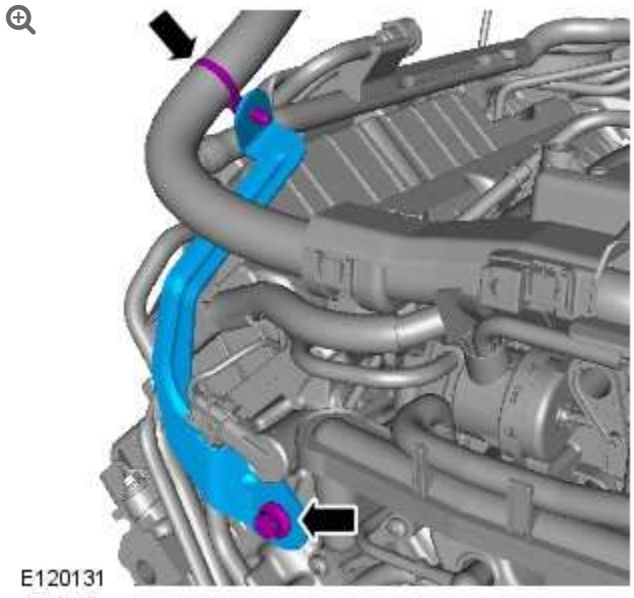

33.

NOTE:

RHD illustration shown, LHD is similar.

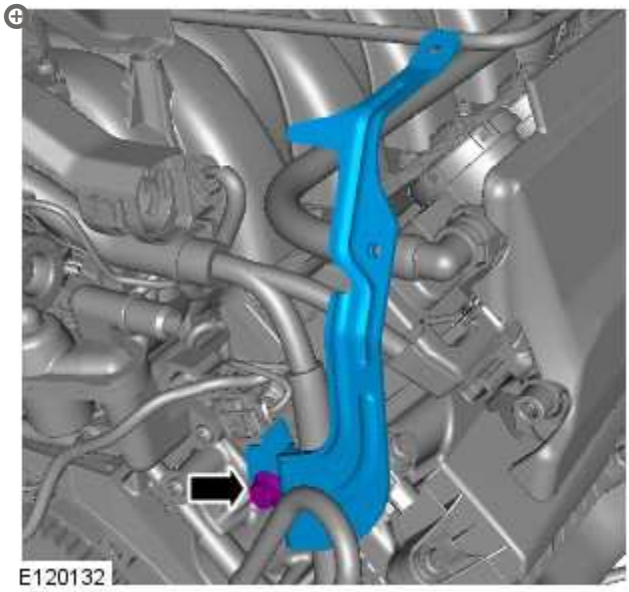

34.

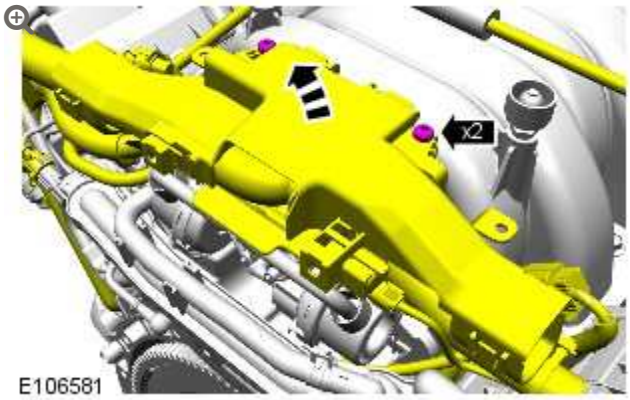

35.

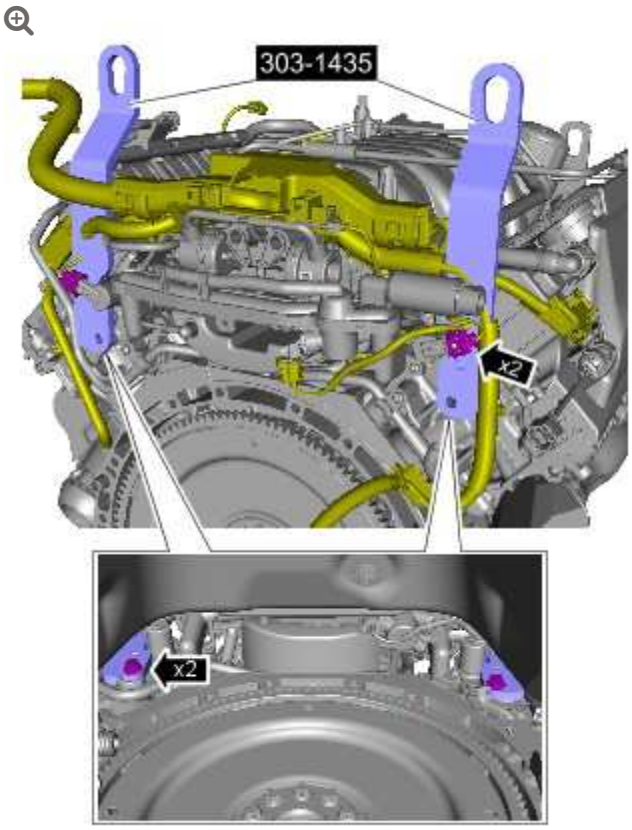

E117619

Special Tool(s): 303-1435

Torque: **25 Nm**

36.

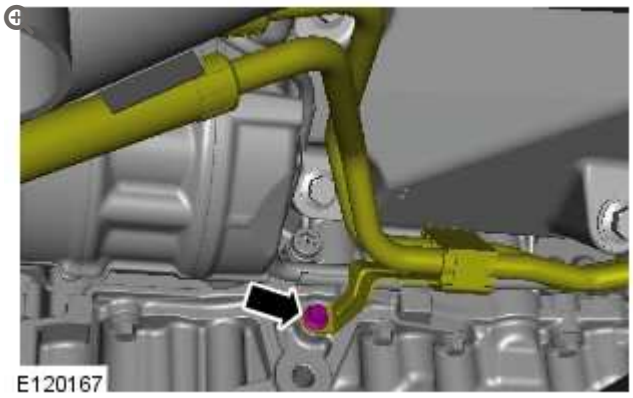
E120167

37.

NOTE:

Remove and discard the gasket.

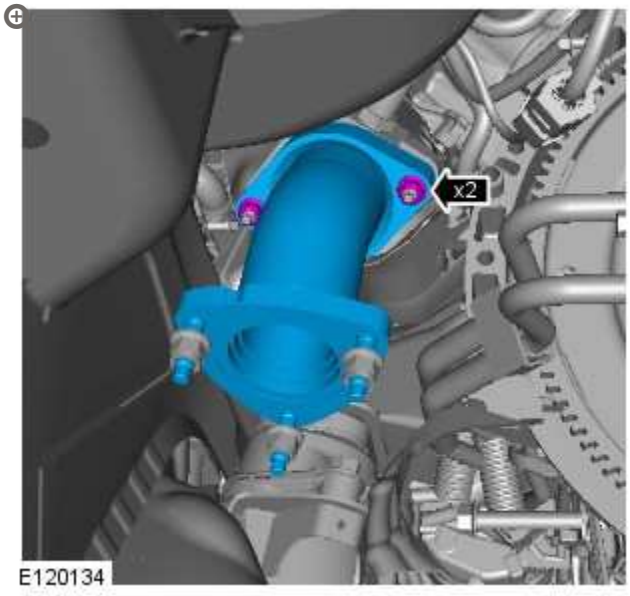

38.

NOTE:

Remove and discard the gasket.

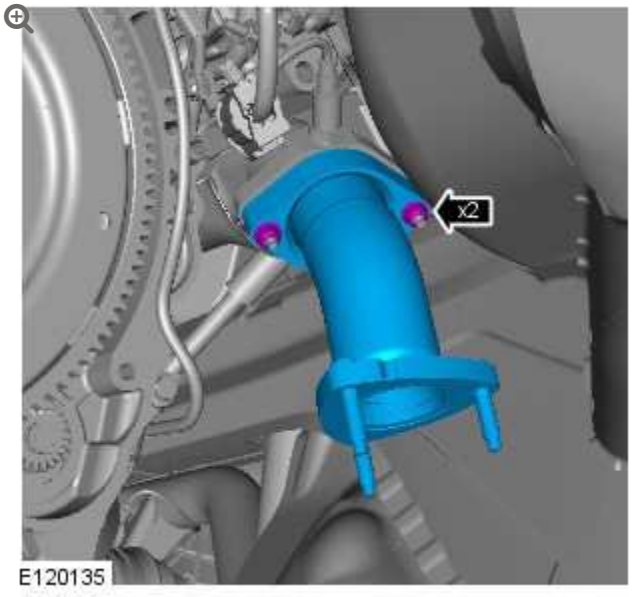

39.

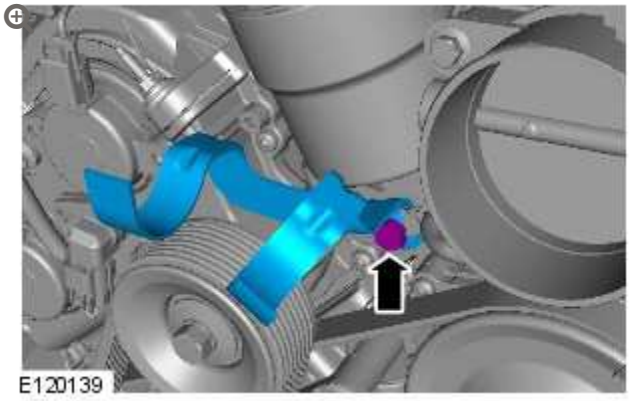

40.

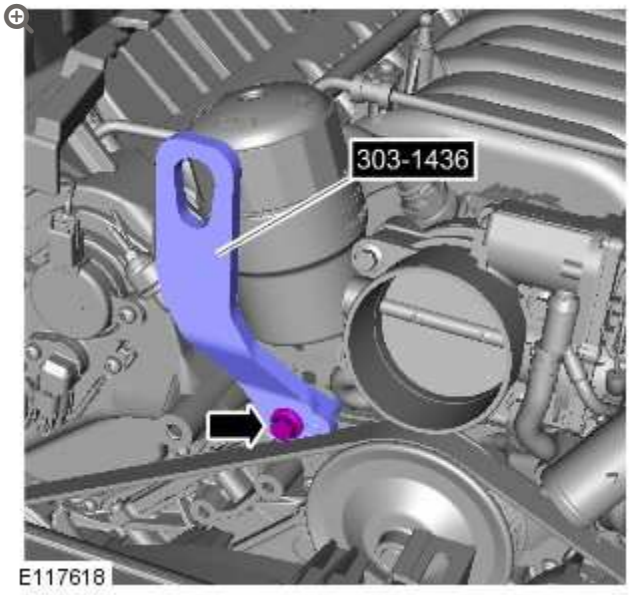

Special Tool(s): 303-1436

Torque: **25 Nm**

41.

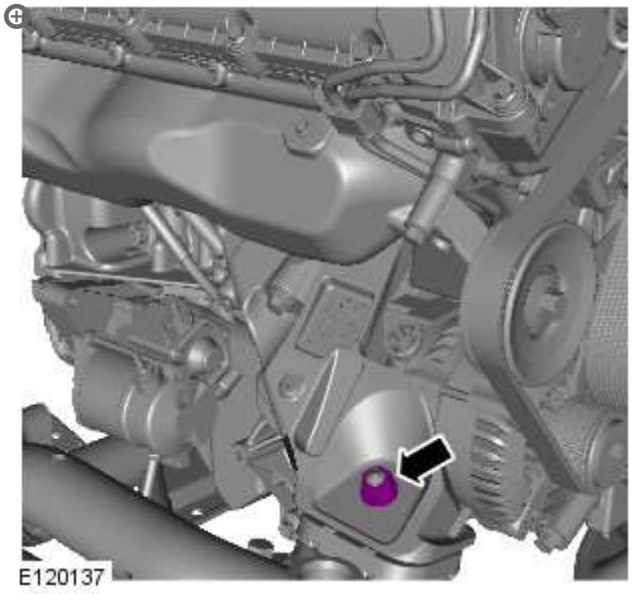

42.

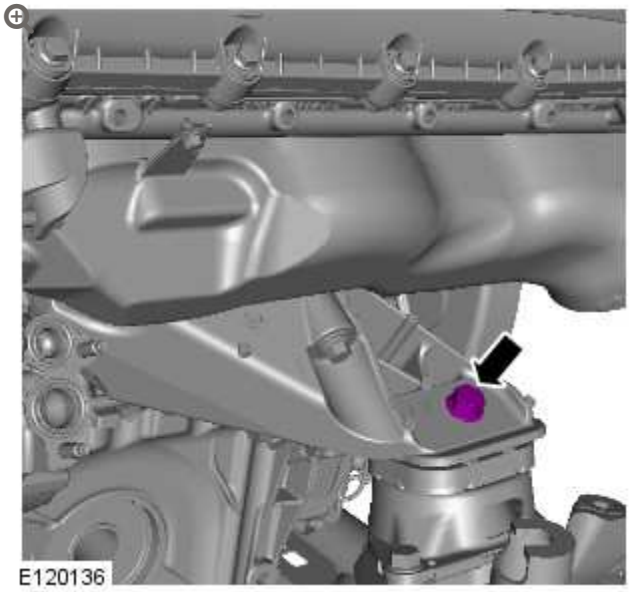

43.

NOTE:

This step requires the aid of another technician.

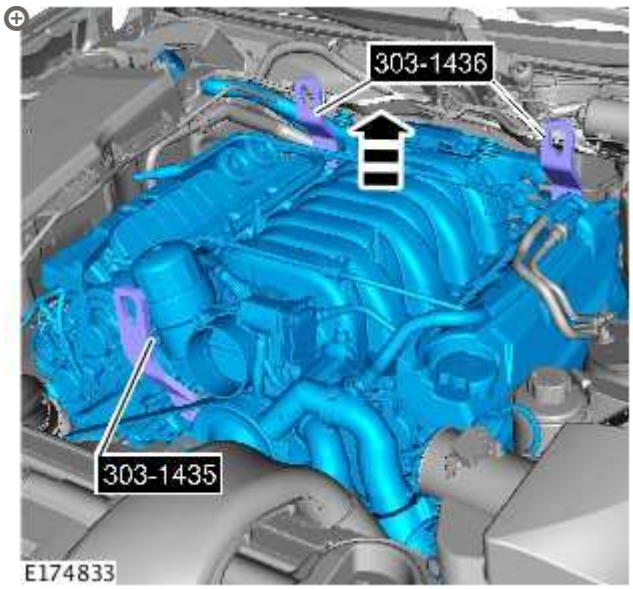

Special Tool(s): 303-1435, 303-1436

ENGINE – V8 S/C 5.0L PETROL

ENGINE (G1224613)

INSTALLATION

SPECIAL TOOL(S)



303-1435

Engine Lifting Brackets Rear



303-1436

Engine Lifting Bracket Front

NOTE:

Some variation in the illustrations may occur, but the essential information is always correct.

All vehicles

1.

NOTE:

This step requires the aid of another technician.

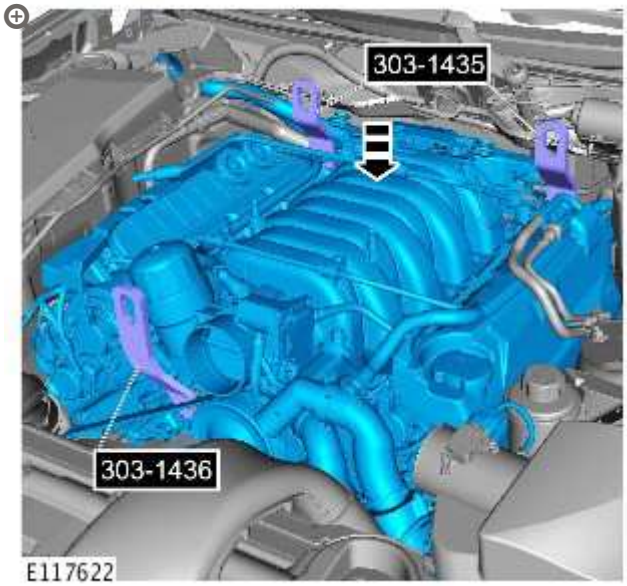

Special Tool(s): 303-1436, 303-1435

2.

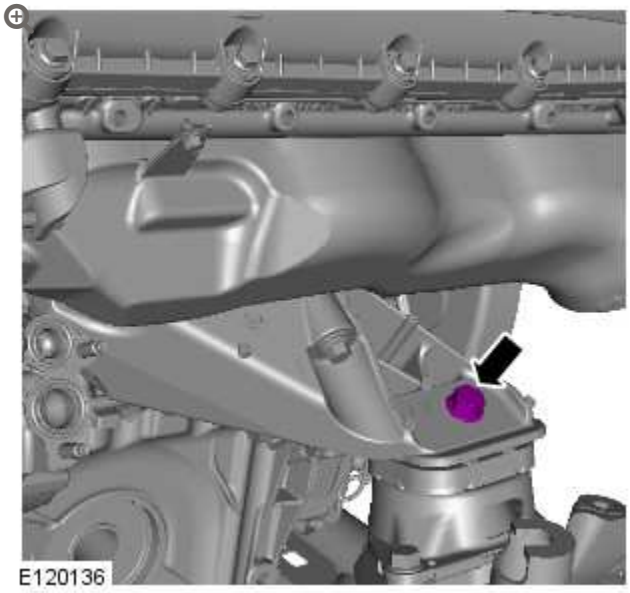

Torque: **100 Nm**

3.

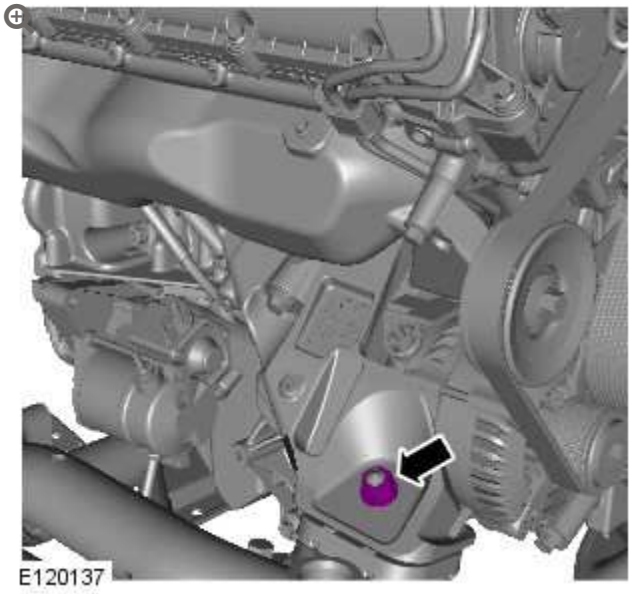

Torque: **100 Nm**

4.

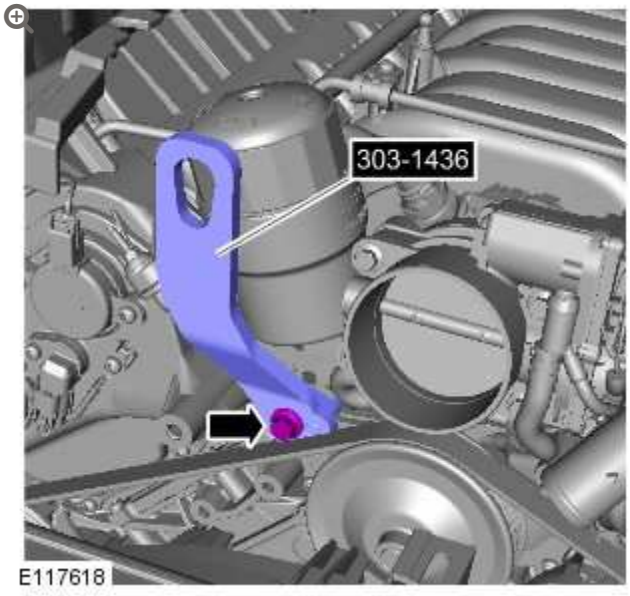

Special Tool(s): 303-1436

5.

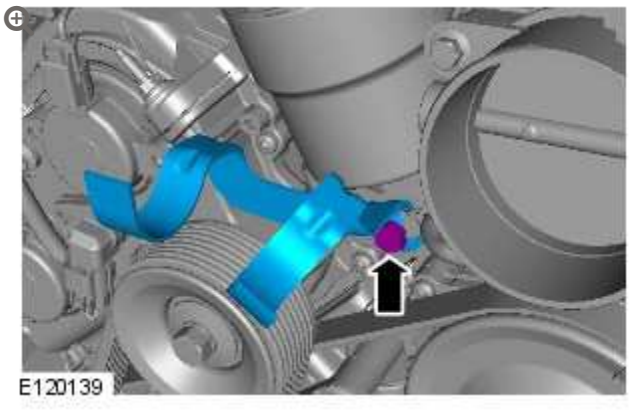

Torque: **25 Nm**

6.

NOTE:

Install a new gasket.

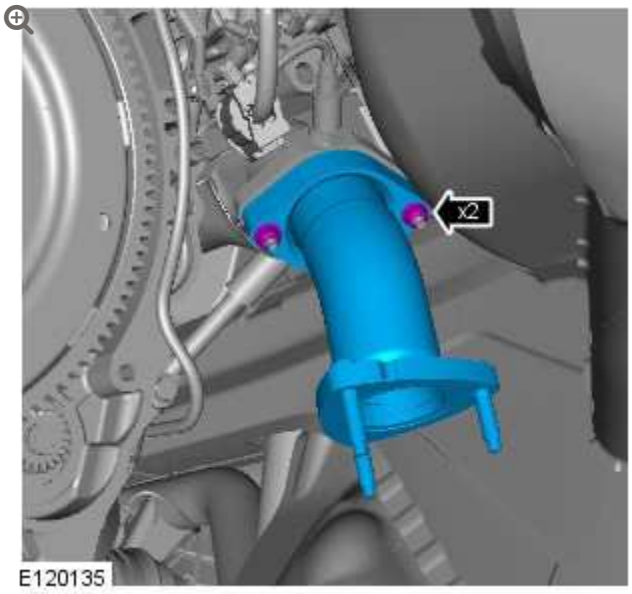

Torque: **48 Nm**

7.

NOTE:

Install a new gasket.

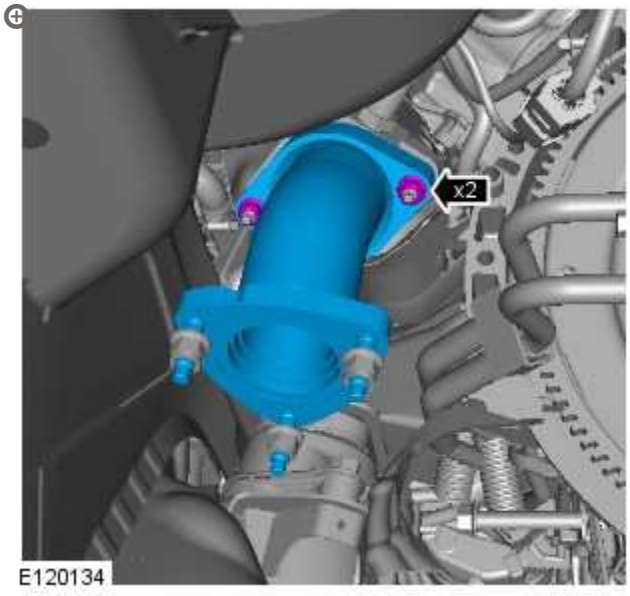

Torque: **48 Nm**

8.

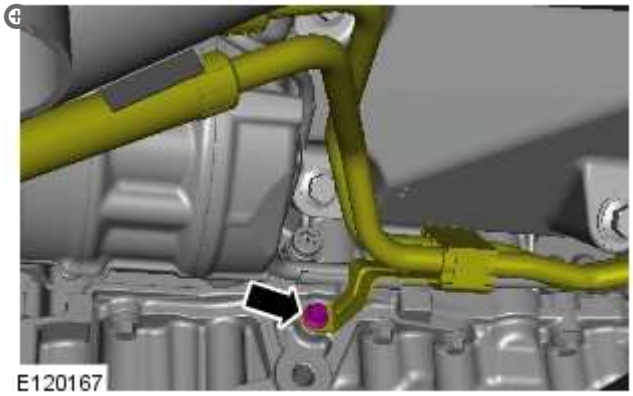

Torque: **10 Nm**

9.

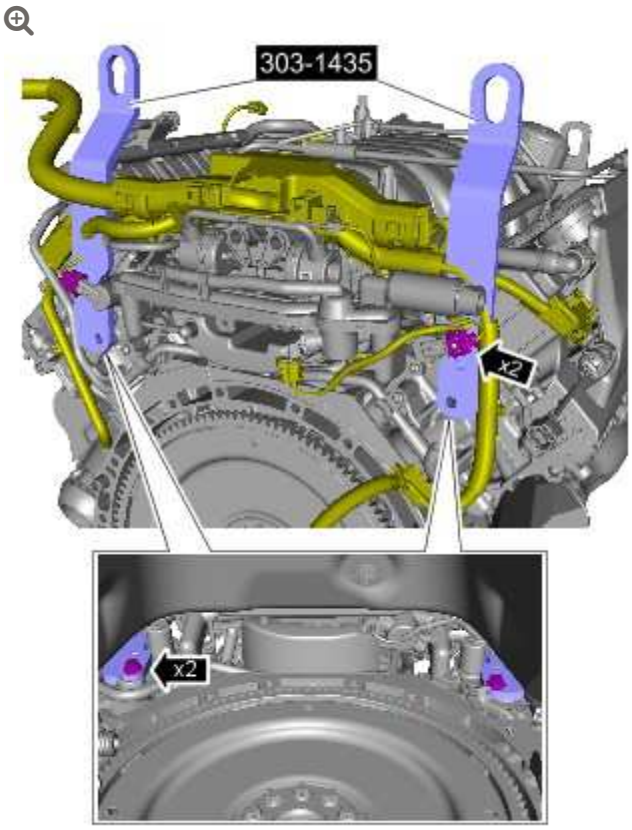

Special Tool(s): 303-1435

10.

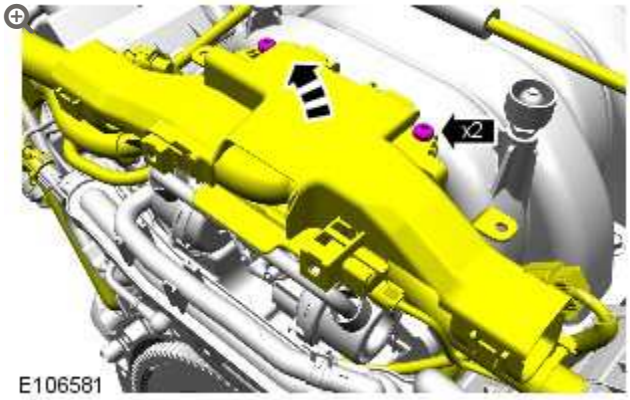

Torque: **10 Nm**

11.

NOTE:

RHD illustration shown, LHD is similar.

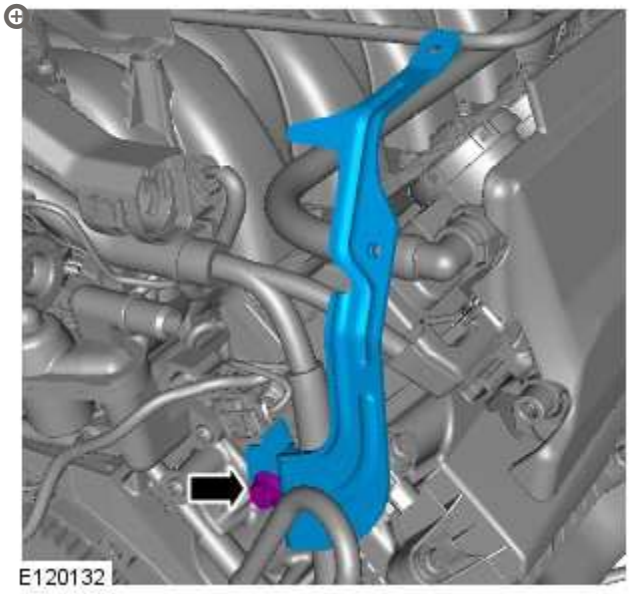

Torque: **25 Nm**

12.

NOTE:

RHD illustration shown, LHD is similar.

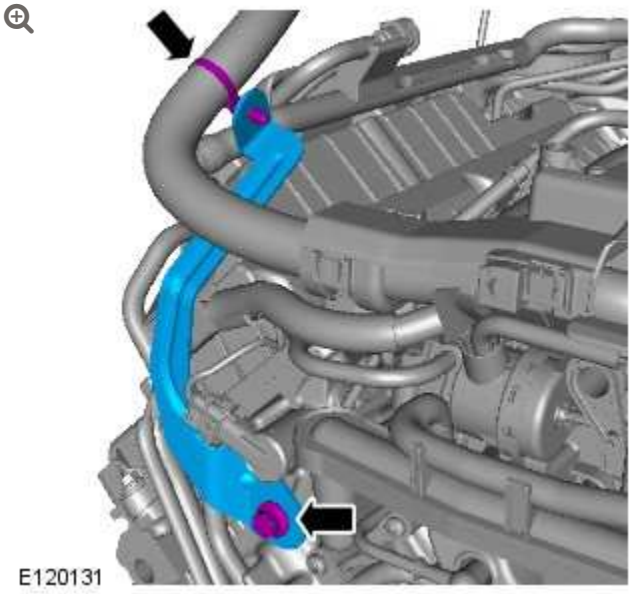

Torque: **25 Nm**

Left-hand drive vehicles

13.

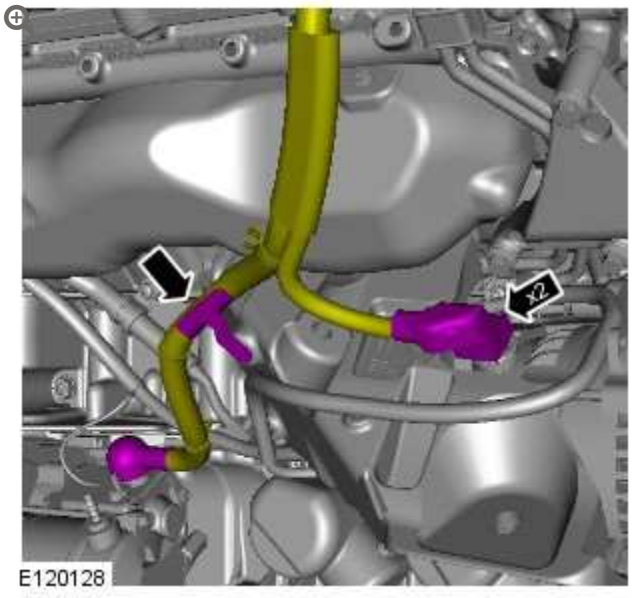

Torque: **10 Nm**

Right-hand drive vehicles

14.

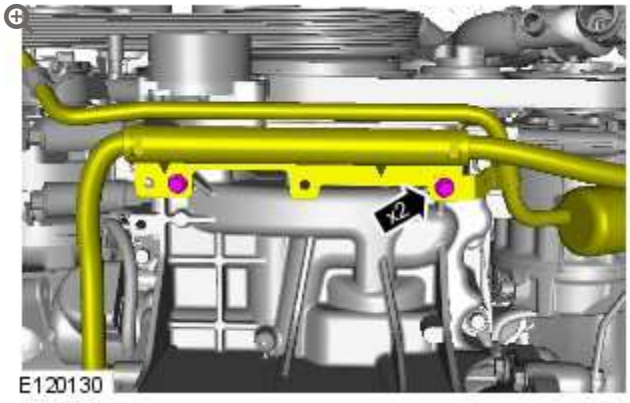

Torque: **10 Nm**

15.

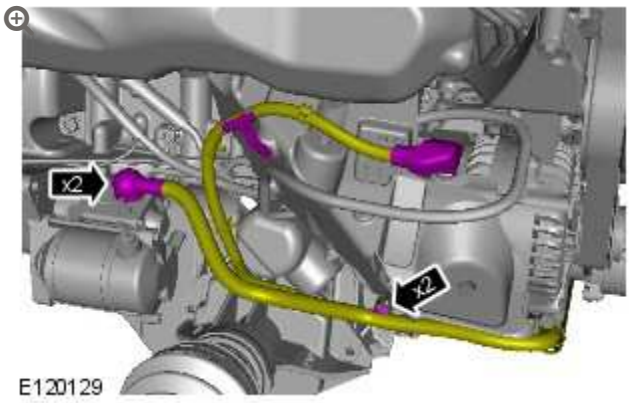

Torque: **10 Nm**

All vehicles

16.

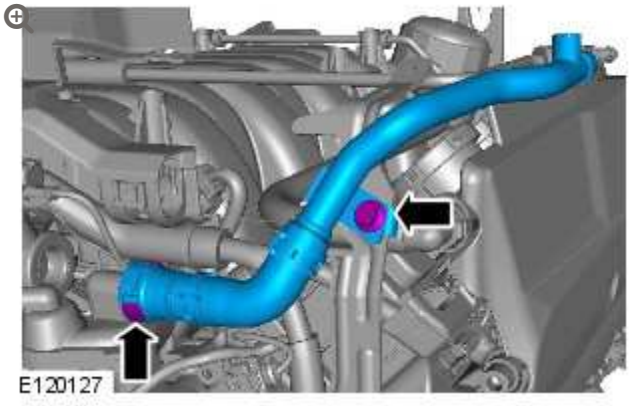

Torque: **12 Nm**

17.

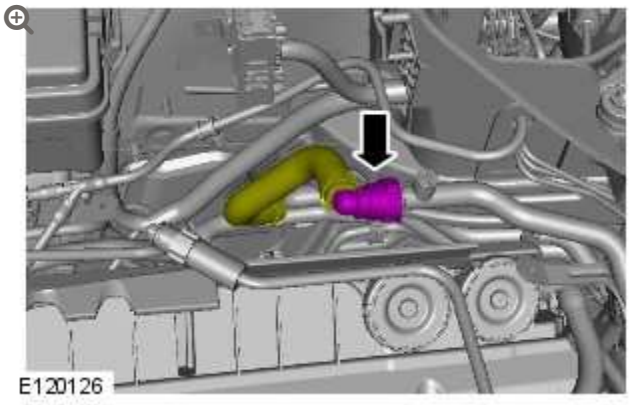

18.

CAUTIONS:

- Install new o-ring seals
- Lubricate the O-ring seals.

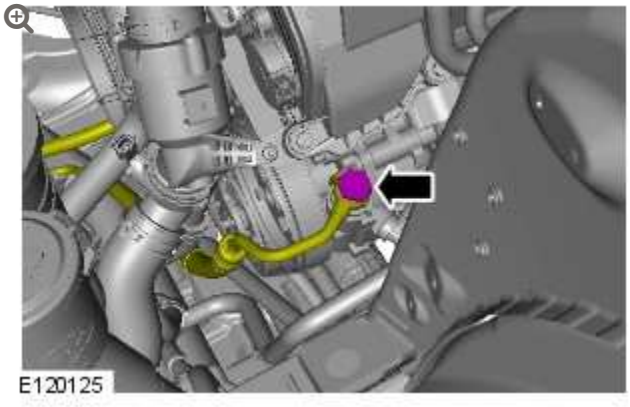

Torque: **25 Nm**

19.

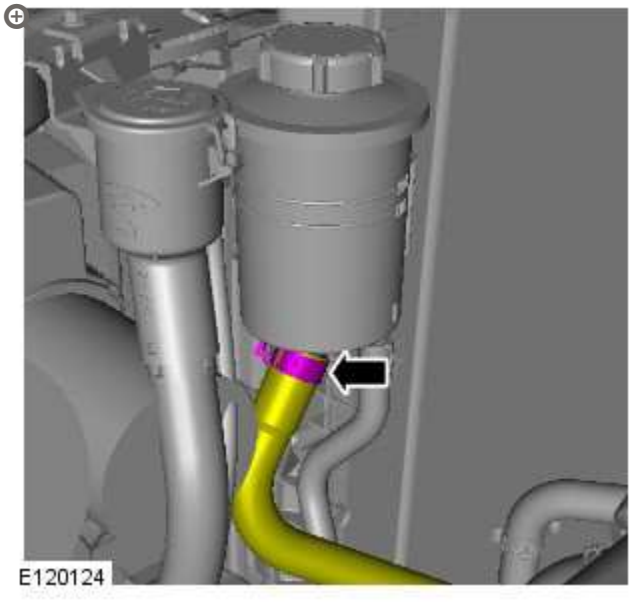

20.

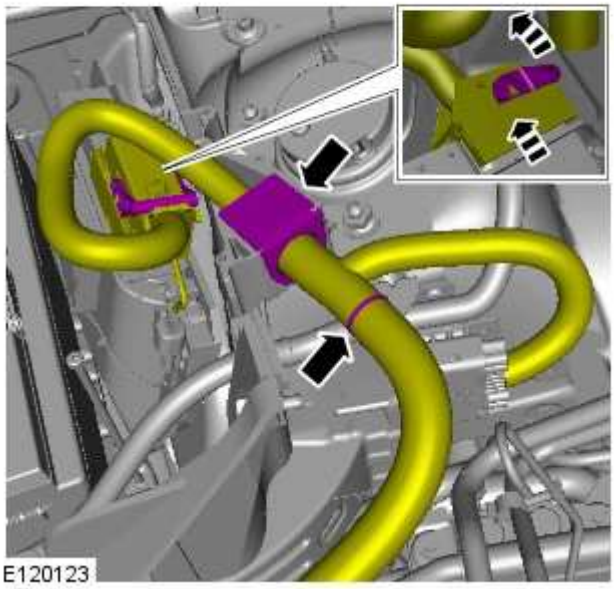

21.

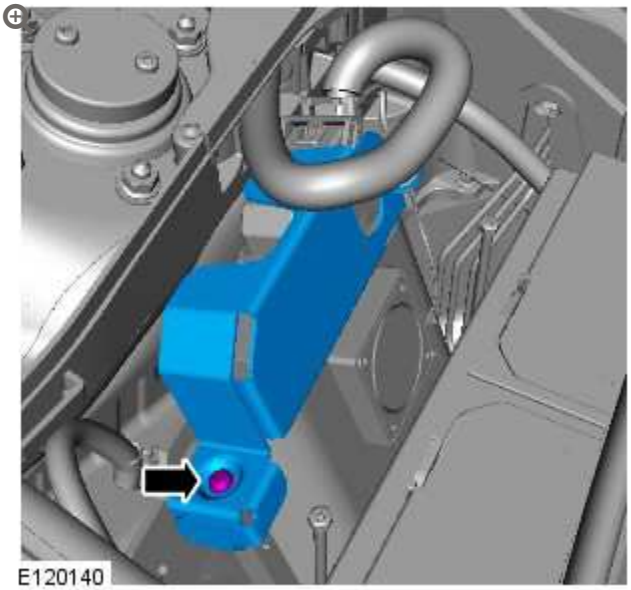

22.

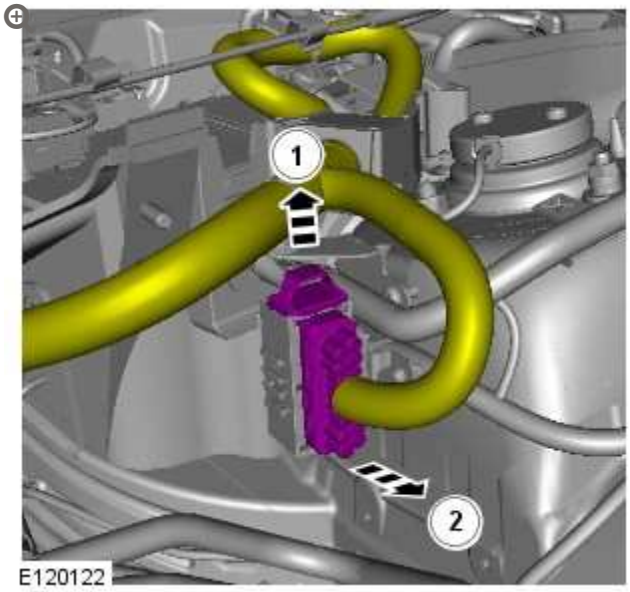

23.

NOTE:

RHD illustration shown, LHD is similar.

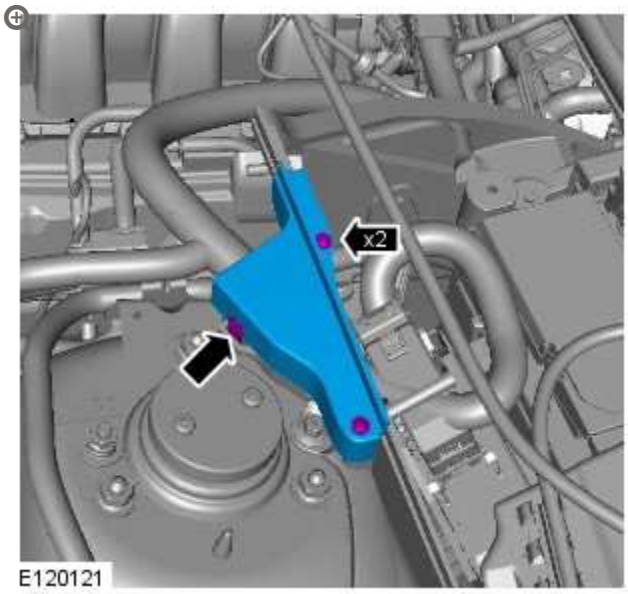

Torque: **8 Nm**

24.

CAUTION:

Make sure that the mating faces are clean and free of foreign material.

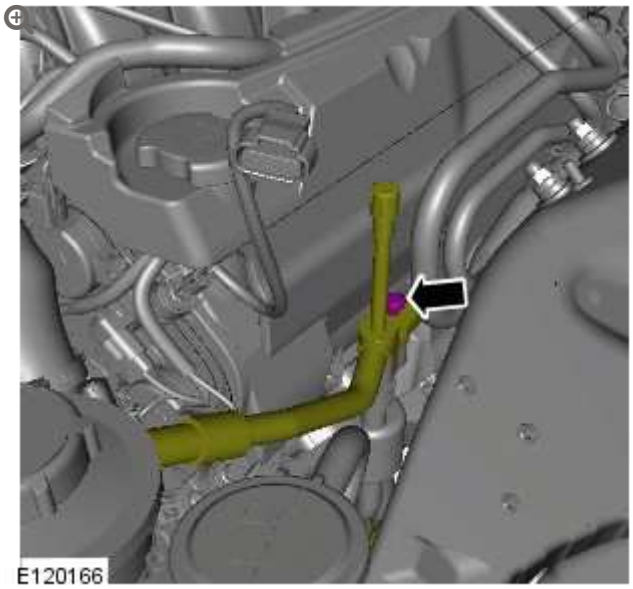

Torque: **25 Nm**

25.

CAUTION:

Make sure that the area around the component is clean and free of foreign material.

NOTE:

Remove and discard the blanking caps.

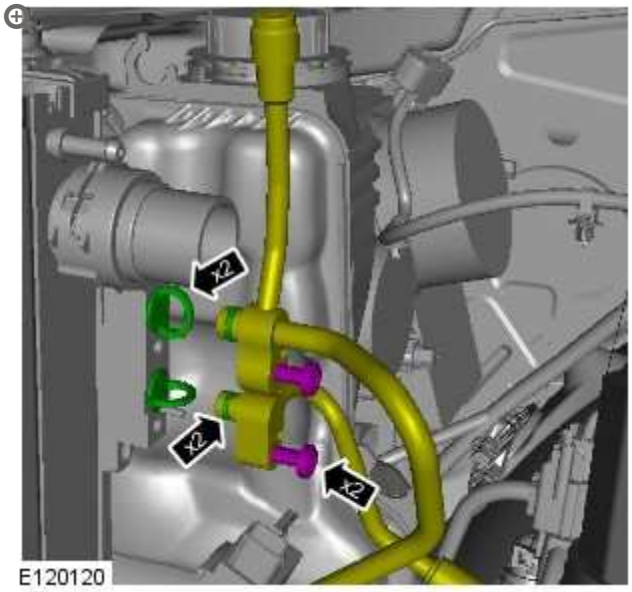

Torque: **25 Nm**

26.

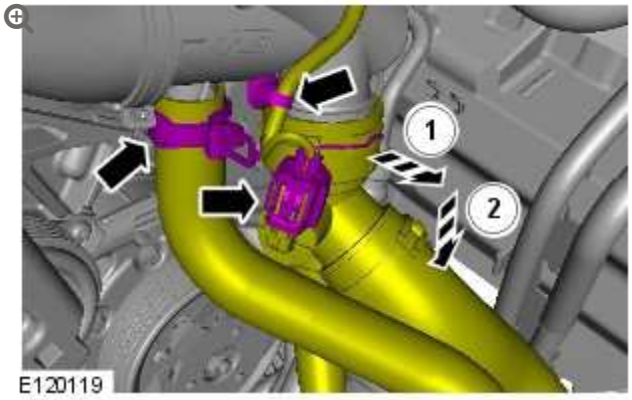

27.

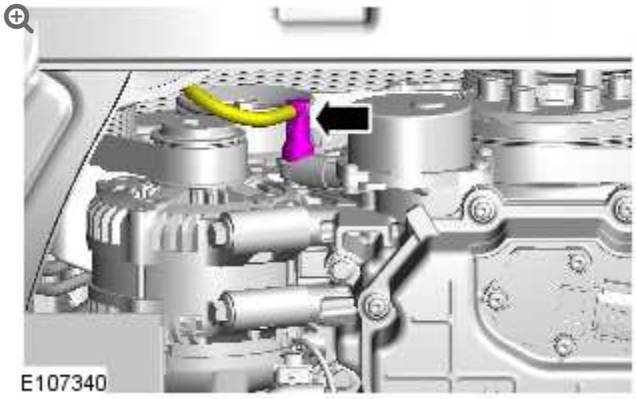

28.

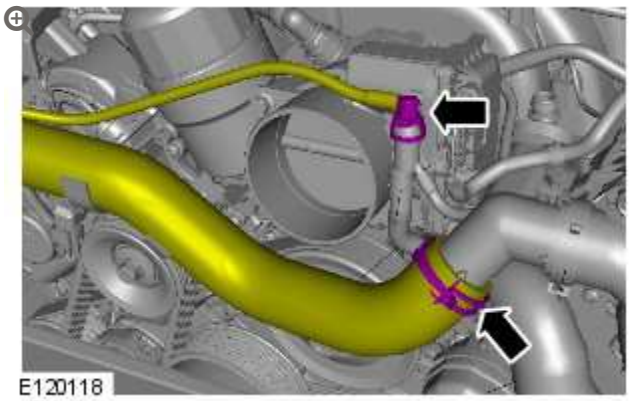

29.

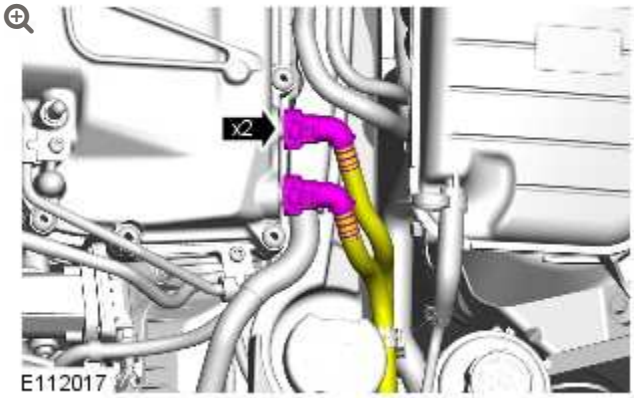

30.

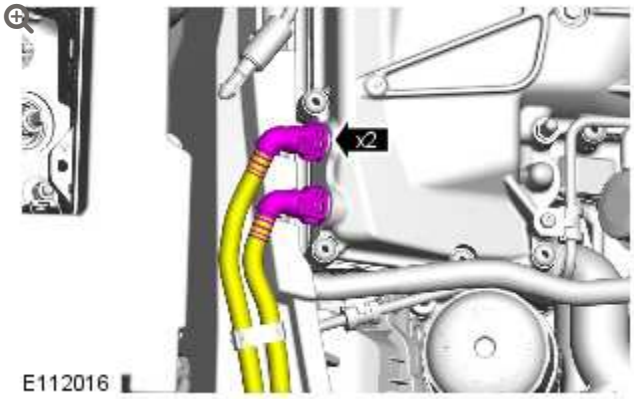

31.

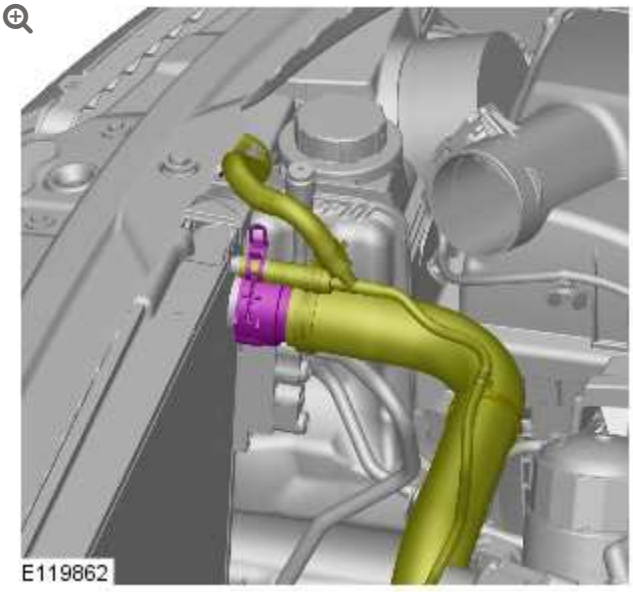

32.

WARNING:

Do not smoke or carry lighted tobacco or open flame of any type when working on or near any fuel related components. Highly flammable vapors are always present and may ignite. Failure to follow these instructions may result in personal injury.

CAUTION:

Be prepared to collect escaping fuel.

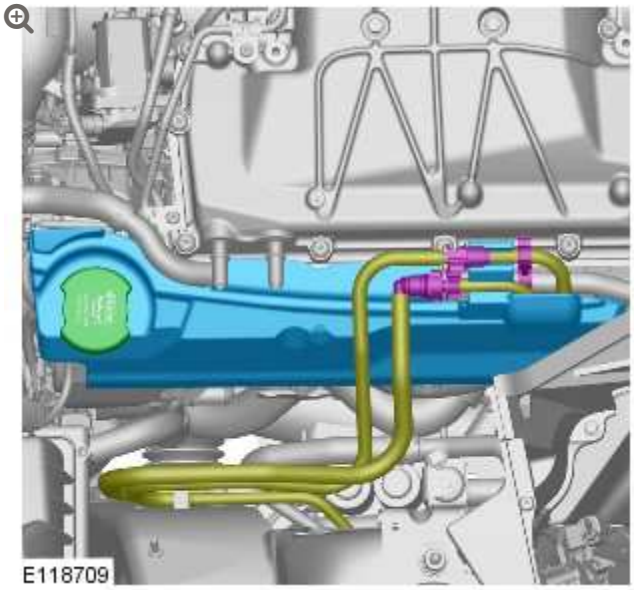

33.

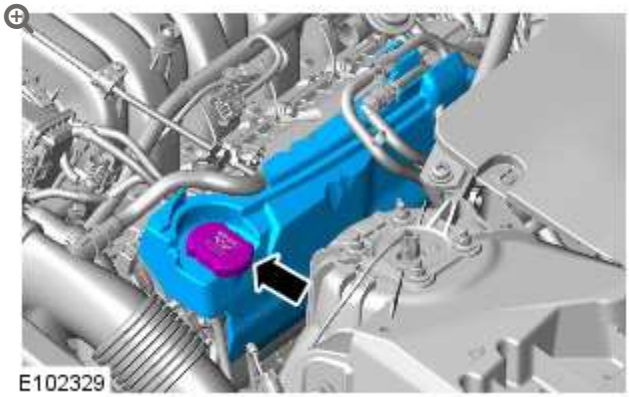

34.

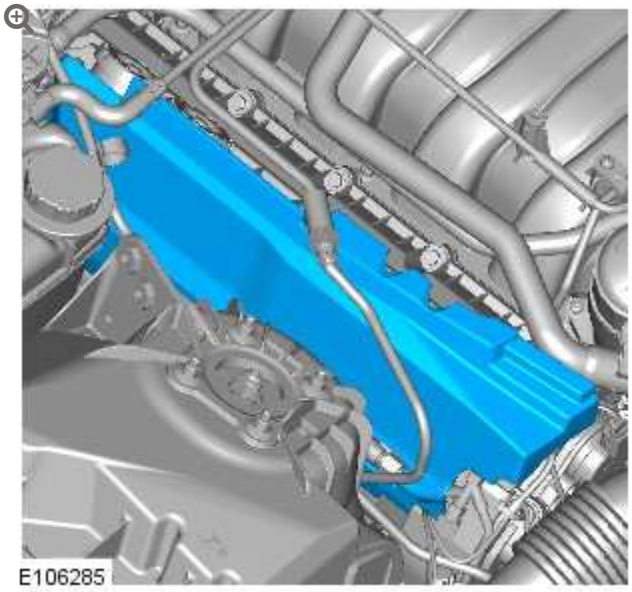

35.

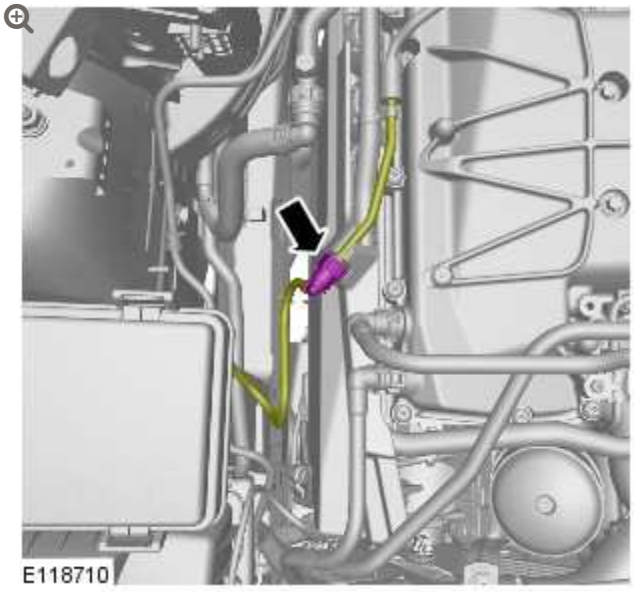

36. Refer to: Front Halfshaft LH - Vehicles Without: High Performance Brakes (205-04 Front Drive Halfshafts, Removal and Installation).

37. Refer to: Front Halfshaft RH - Vehicles Without: High Performance Brakes (205-04 Front Drive Halfshafts, Removal and Installation).

38. Refer to: Cooling System Partial Draining and Vacuum Filling (303-03 Engine Cooling - TDV8 3.6L Diesel, General Procedures).

39. Refer to: Cooling Fan - V8 S/C 5.0L Petrol (303-03A Engine Cooling - V8 5.0L Petrol/V8 S/C 5.0L Petrol, Removal and Installation).

40. Refer to: Transmission - V8 5.0L Petrol/V8 S/C 5.0L Petrol (307-01 Automatic Transmission/Transaxle - V8 5.0L Petrol/V8 S/C 5.0L Petrol, Installation).

41. Refer to: Air Conditioning (A/C) System Recovery, Evacuation and Charging - V8 5.0L Petrol/V8 S/C 5.0L Petrol (412-00 Climate Control System - General Information, General Procedures).

42. Lower the vehicle.

43. Connect the battery ground cable.
Refer to: Specifications (414-00 Battery and Charging System - General Information, Specifications).

44. Using the approved diagnostic equipment, clear the powertrain control module (PCM) adaptions.

ENGINE – V8 S/C 5.0L PETROL

ENGINE MOUNT LH (G1224597)

REMOVAL AND INSTALLATION

12.45.11	MOUNTING – LH – RENEW	5000 CC, AJ V8, SUPERCHARGED	1.7	USED WITHINS	+

SPECIAL TOOL(S)



100–012

Slide Hammer



205-735

Remover, Halfshaft Inner Joint



303-1142

Viscous Coupling Wrench



303-1143

Viscous Coupling Holding Tool



308-621-2

Installer/Guide, Halfshaft Oil Seal



308-626

Installer – Halfshaft Seal

REMOVAL

All vehicles

1. Disconnect the battery ground cable.
   Refer to: Specifications (414-00, Specifications).

2. **WARNING:**

   Make sure to support the vehicle with axle stands.

   Raise and support the vehicle.

3. Refer to: Air Cleaner Outlet Pipe T-Connector (303-12, Removal and Installation).

4. Refer to: Differential Draining and Filling (205-03, General Procedures).

5.

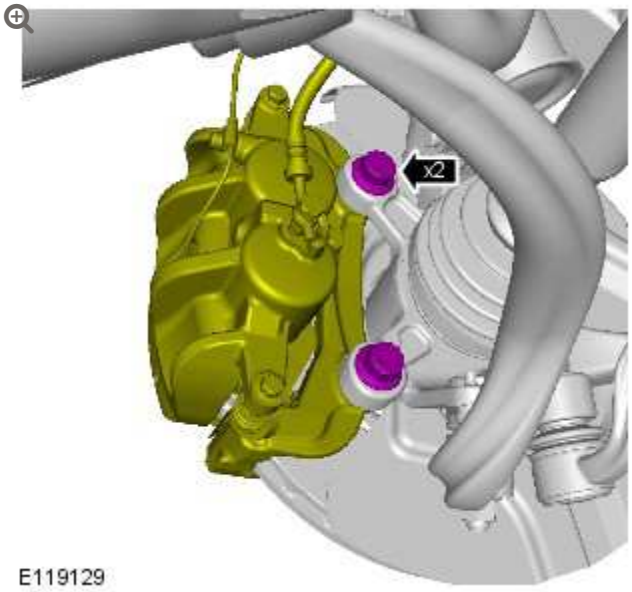

6.

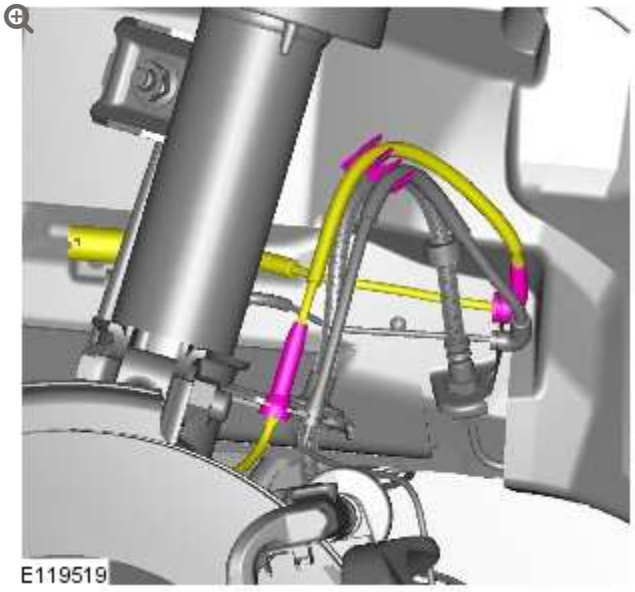

7.

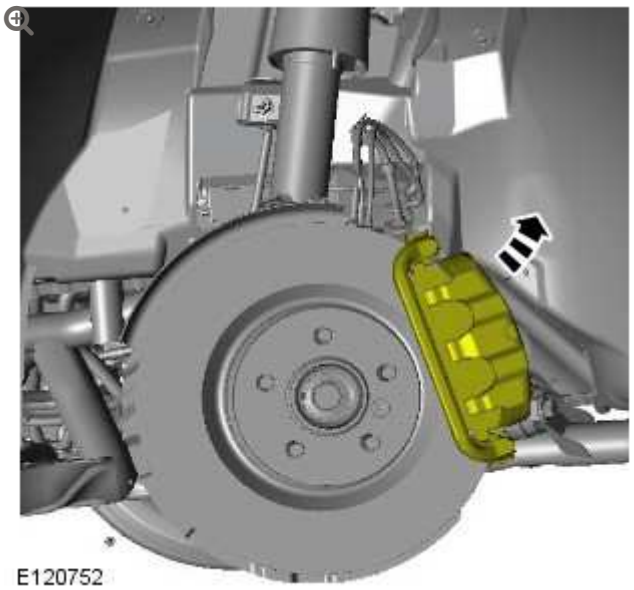
E120752

8.

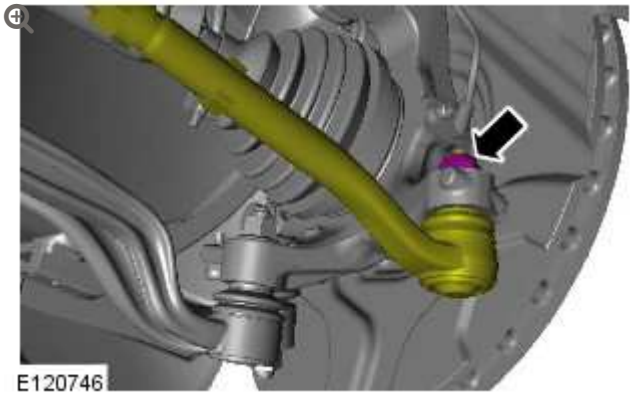
E120746

9.

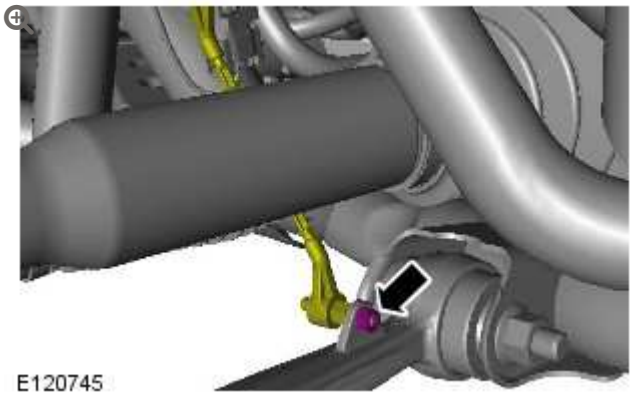
E120745

10.

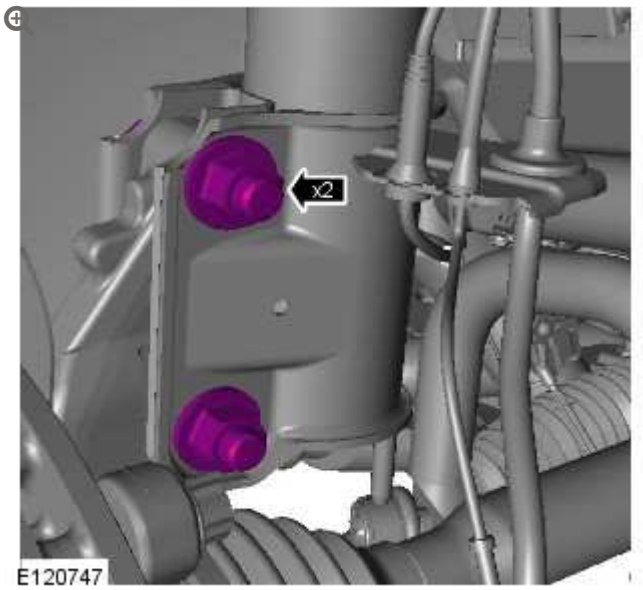

11.

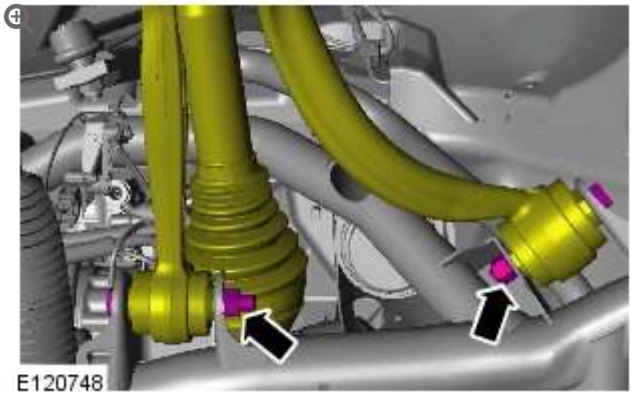

12.

CAUTION:

Support the halfshaft.

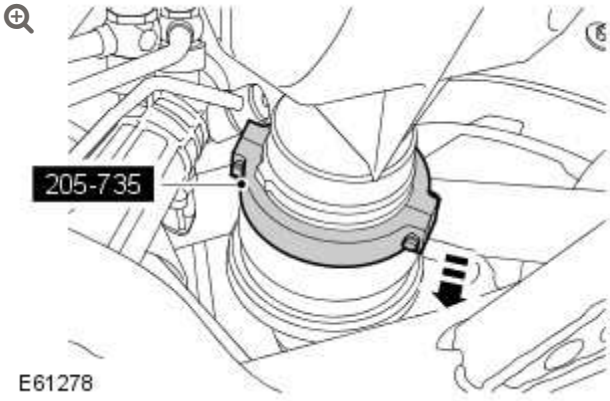

- Remove and discard the retaining clip.
  Special Tool(s): 205-735

13.

CAUTIONS:

- Keep the halfshaft horizontal to avoid damaging the oil seal.
- Make sure no damage occurs to the halfshaft seal when installing the halfshaft.

NOTE:

With assistance remove the components.

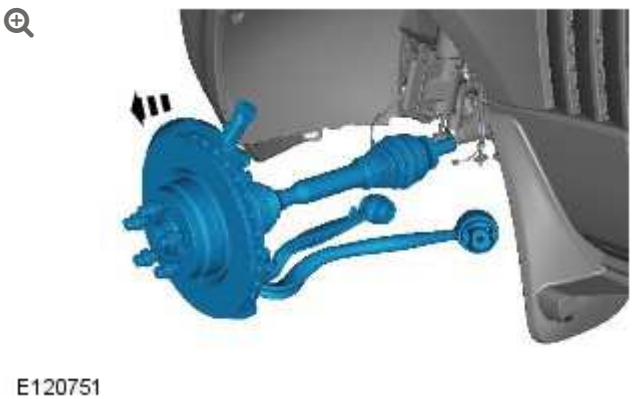

- Install a new halfshaft oil seal.

	Left-hand drive vehicles

14.

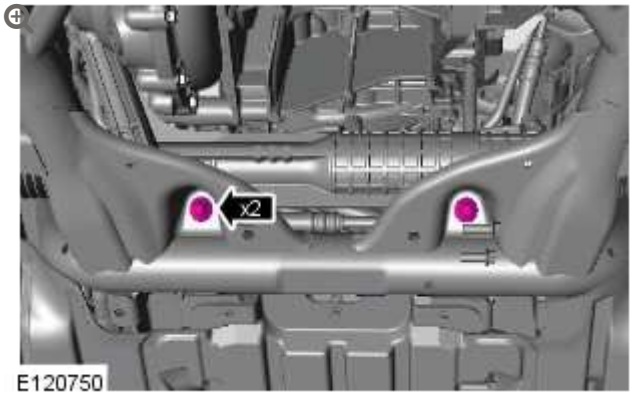

15.

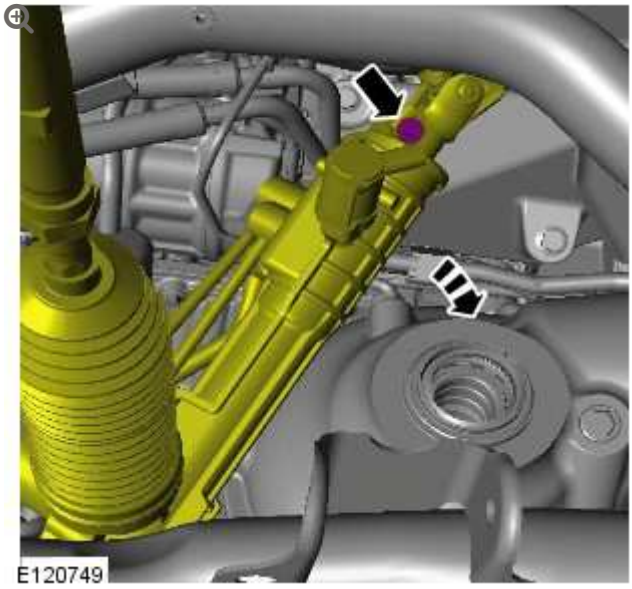

	All vehicles

16.

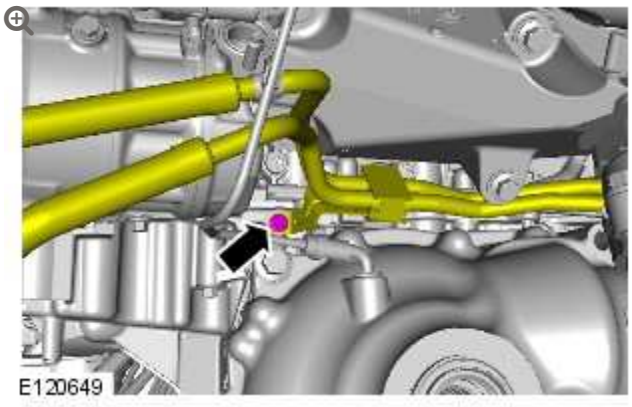

17.

CAUTION:

Always protect the cooling pack elements to prevent accidental damage.

NOTES:

- The thread is right handed.
- Some variation in the illustrations may occur, but the essential information is always correct.

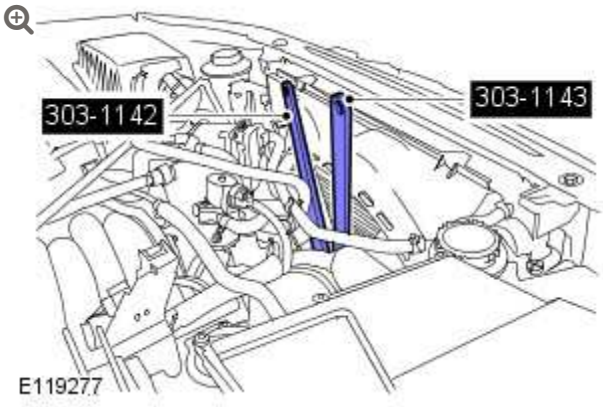

Special Tool(s): 303-1142, 303-1143

18.

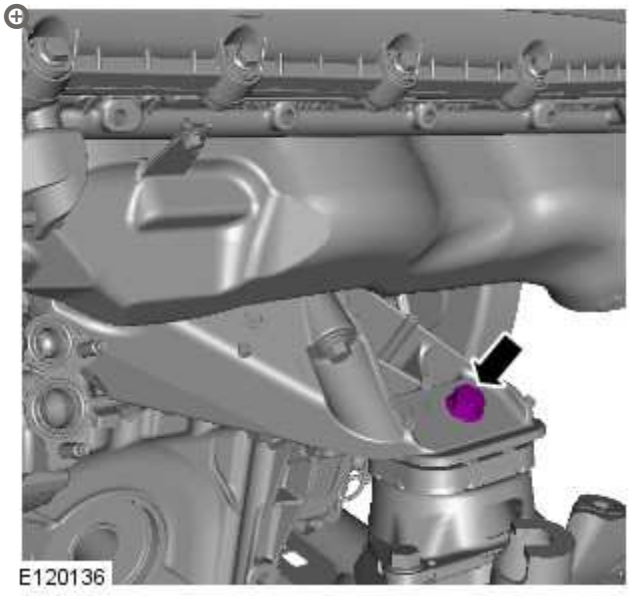

19.

CAUTION:

Use a wooden block to protect the oil pan when supporting the engine.

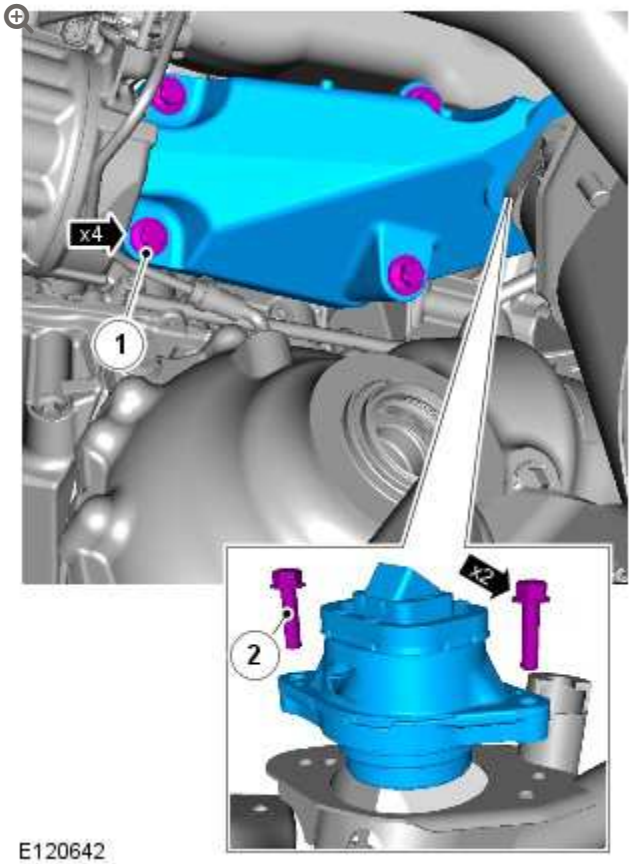

INSTALLATION

	All vehicles

1.

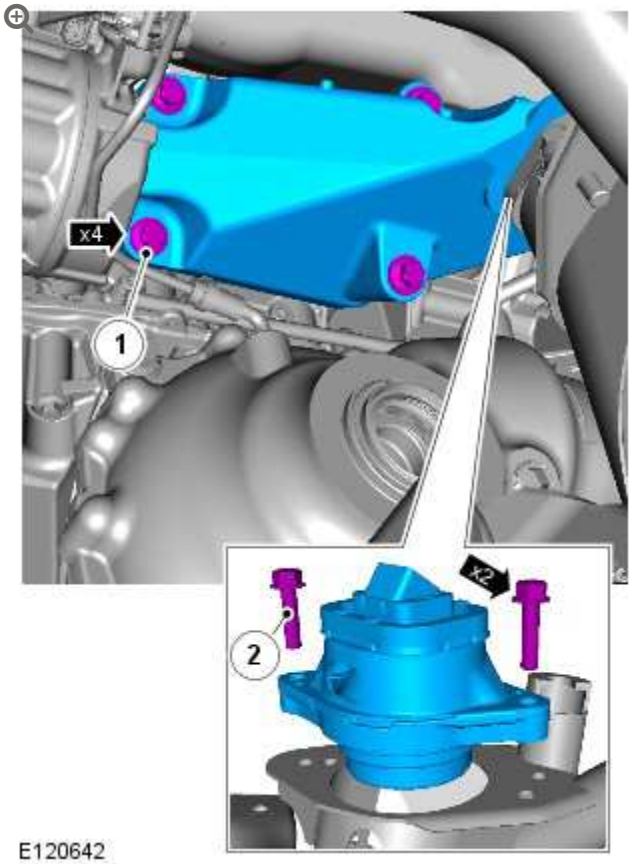

- *Torque:*
  - 1 **45 Nm**
  - 1 **60°**
  - 2 **56 Nm**

2.

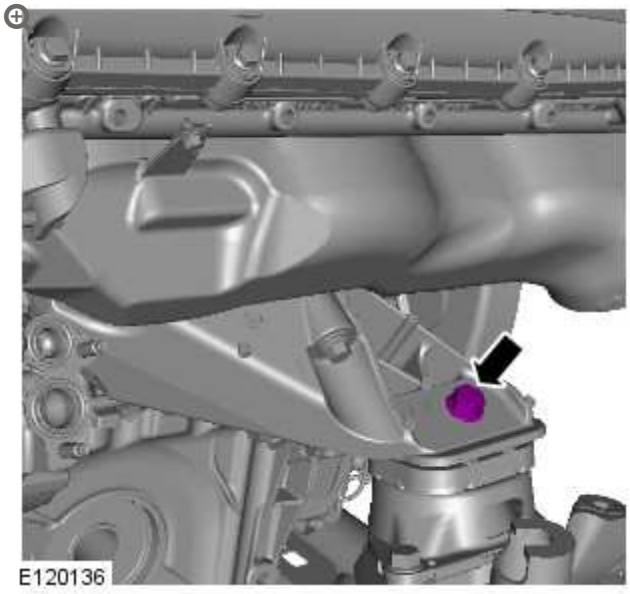

Torque: **100 Nm**

3.

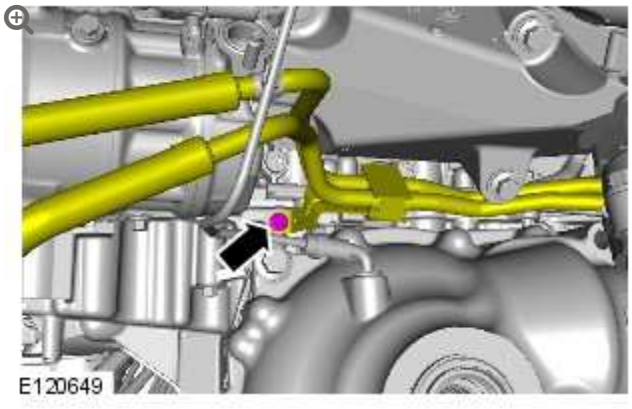

Torque: **10 Nm**

	Left-hand drive vehicles

4.

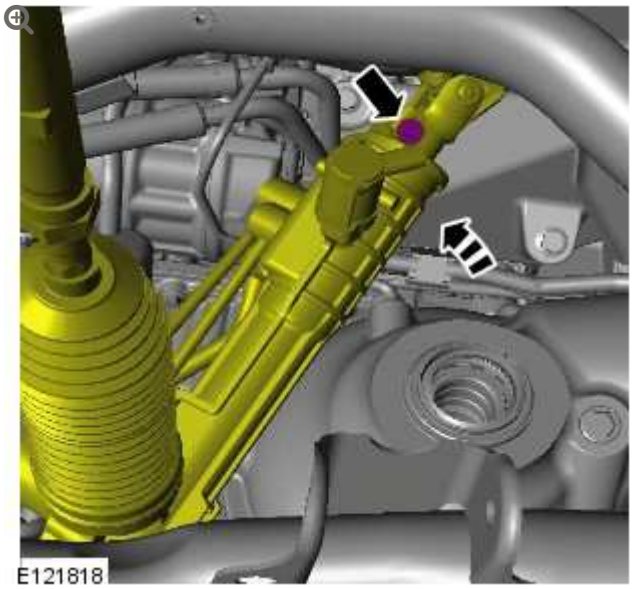

Torque: **24 Nm**

5.

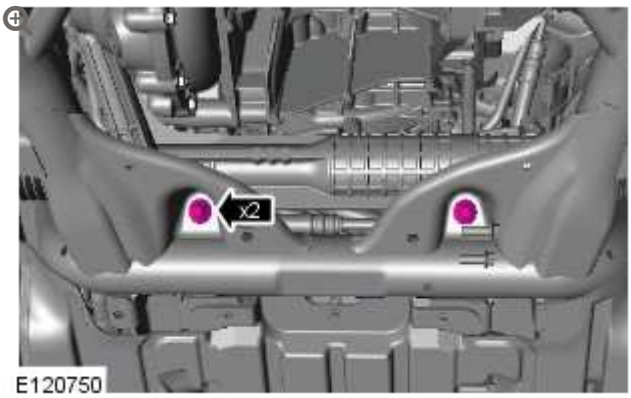

Torque: **100 Nm**

	All vehicles

6.

CAUTIONS:

- Keep the halfshaft horizontal to avoid damaging the oil seal.
- Make sure no damage occurs to the halfshaft seal when installing the halfshaft.

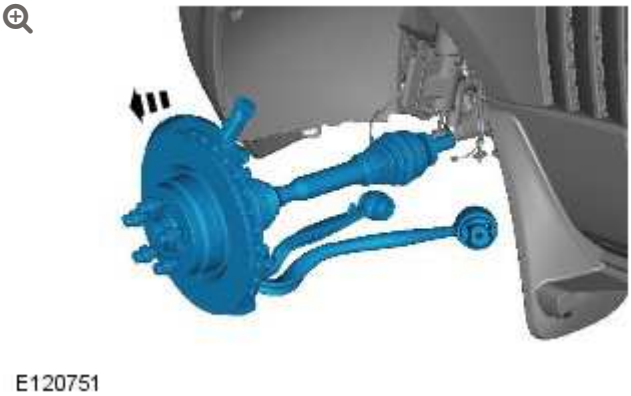

- Install a new halfshaft oil seal.

7.

CAUTION:

The seal protector must be left in place until the halfshaft has been installed.

NOTE:

LH illustration shown, RH is similar.

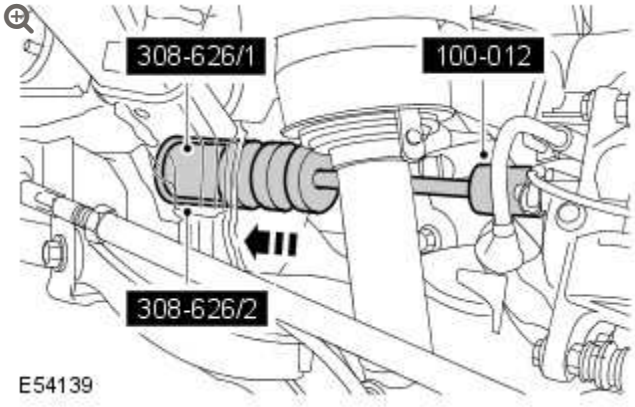

- Clean the component mating faces.
  Special Tool(s): 100-012, 308-626, 308-621-2

8.

CAUTIONS:

- Keep the halfshaft horizontal to avoid damaging the oil seal.
- Pull on the halfshaft inboard joint to make sure the clip has fully engaged and retains the halfshaft inboard joint within the differential case.

NOTE:

Do not fully engage the halfshaft until the oil seal protector has been removed.

- Install a new retaining clip.
- Open the halfshaft oil seal protector.
- Lubricate the seal with clean differential fluid.

9.

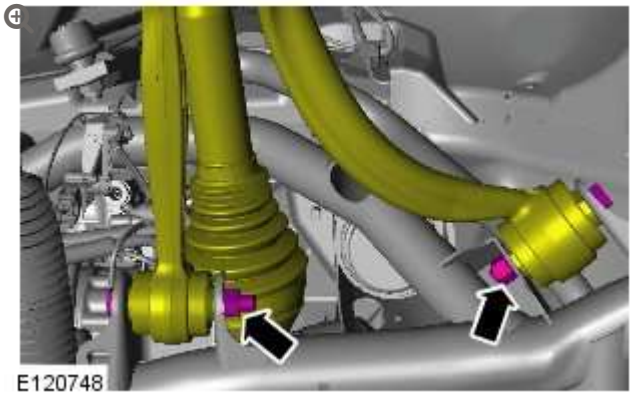

Torque:

Stage 1: **165 Nm**

Stage 2: **90°**

10.

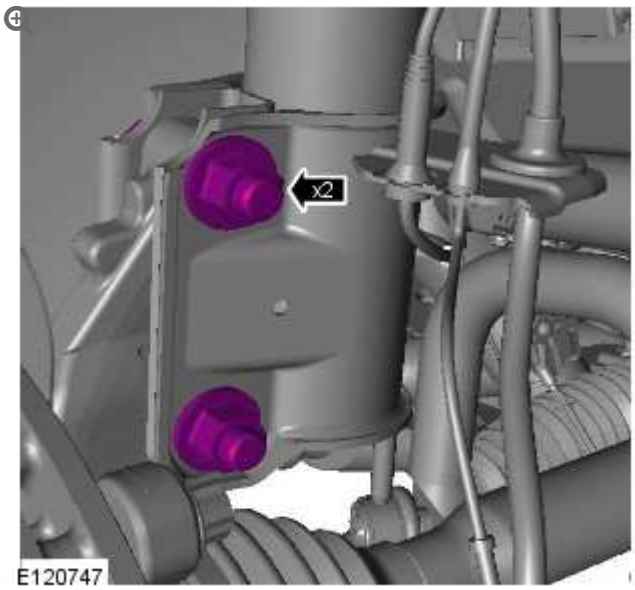

Torque: **250 Nm**

11.

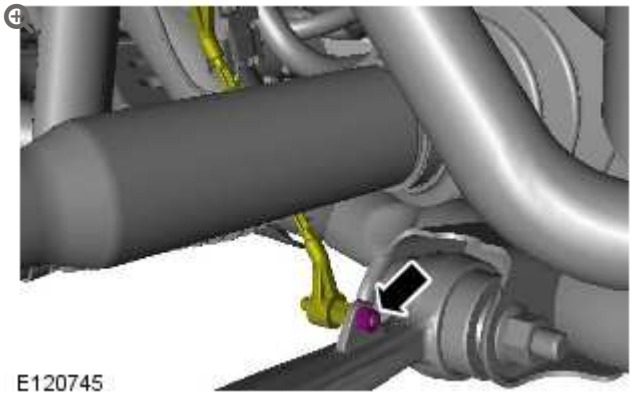

Torque: **8 Nm**

12.

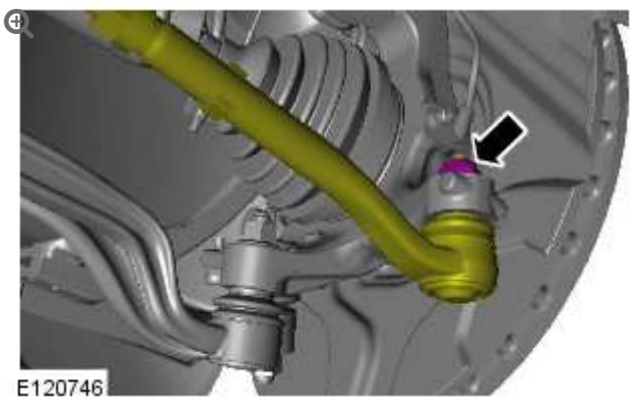

Torque: **80 Nm**

13.

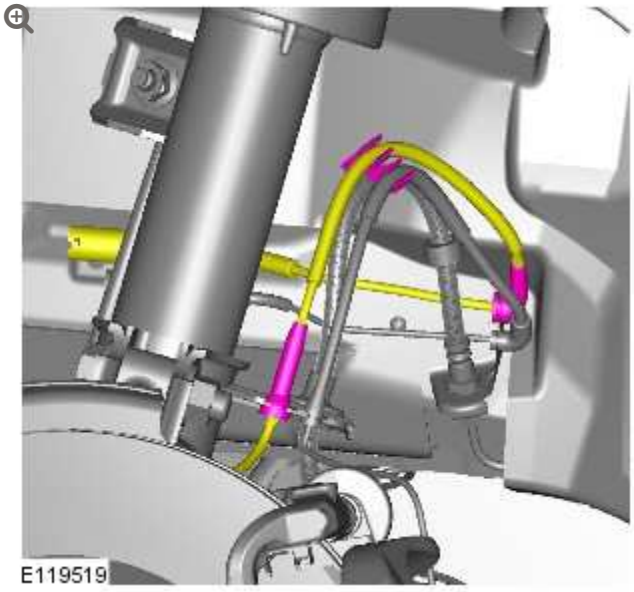

14.

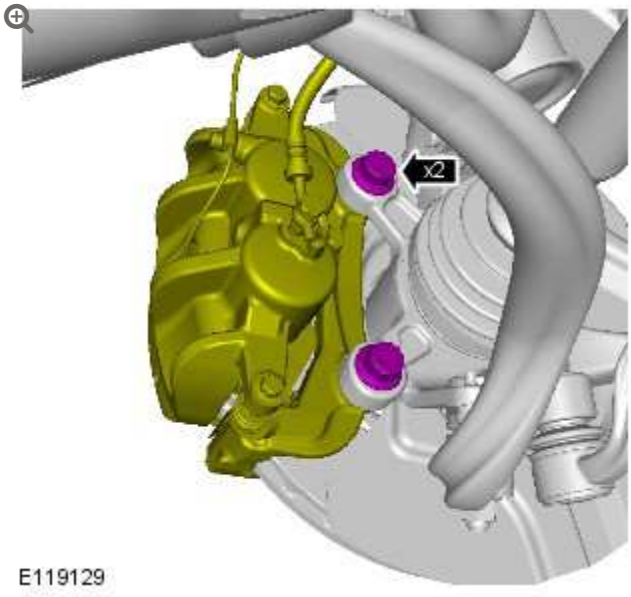

Torque: **275 Nm**

15. Refer to: Differential Draining and Filling (205-03, General Procedures).

16. Refer to: Air Cleaner Outlet Pipe T-Connector (303-12, Removal and Installation).

17. Connect the battery ground cable.

Refer to: Specifications (414-00, Specifications).

ENGINE – V8 S/C 5.0L PETROL

ENGINE MOUNT RH (G1224598)

REMOVAL AND INSTALLATION

12.45.12	MOUNTING – RH – RENEW	5000 CC, AJ V8, SUPERCHARGED	1.7	USED WITHINS	+

SPECIAL TOOL(S)



303-1142

Viscous Coupling Wrench



303-1143

Viscous Coupling Holding Tool

REMOVAL

All vehicles

1. **WARNING:**

   Make sure to support the vehicle with axle stands.

   Raise and support the vehicle.

2. Refer to: Specifications (414-00, Specifications).

3. Refer to: Exhaust System (309-00, Removal and Installation).

4. Refer to: Air Cleaner Outlet Pipe T-Connector (303-12, Removal and Installation).

5. Refer to: Air Cleaner RH (303-12, Removal and Installation).

6.

NOTE:

RH side only.

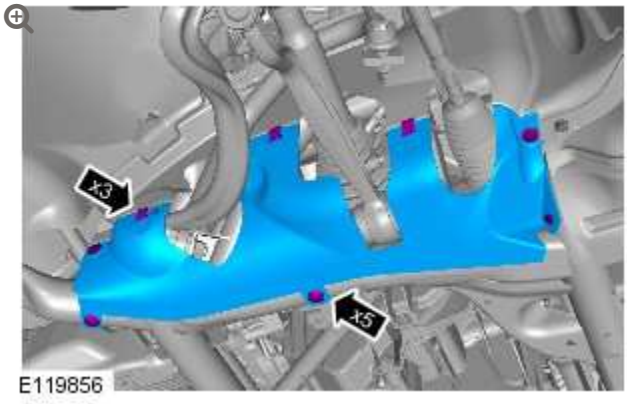

7.

NOTE:

RH side only.

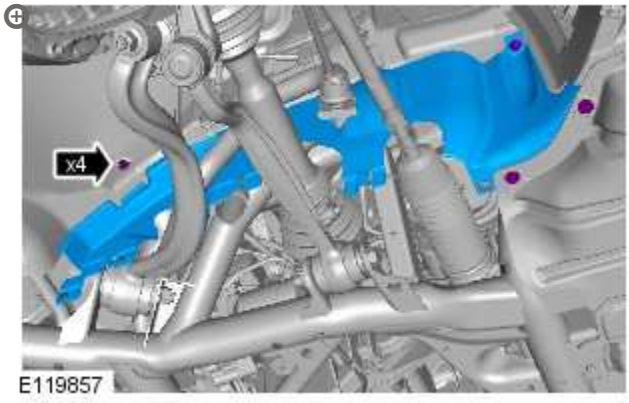

Right-hand drive vehicles

8.

CAUTION:

Do not turn the steering wheel with the steering column lower shaft disconnected as damage to the clockspring and steering wheel switches may occur.

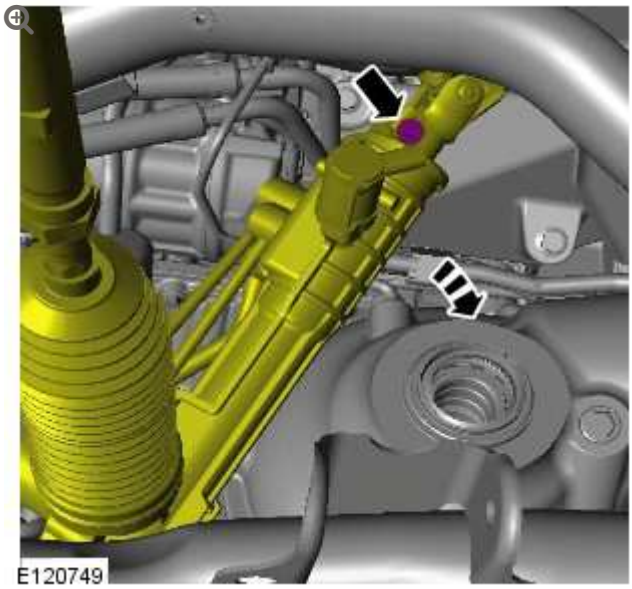

- Note the fitted position.
- Align the steering wheel to straight ahead.
- Remove and discard the Torx bolt.

9.



10.



- Remove and discard the 2 nuts and Torx bolts.

All vehicles

11.

CAUTION:

Always protect the cooling pack elements to prevent accidental damage.

NOTES:

- The thread is right handed.
- Some variation in the illustrations may occur, but the essential information is always correct.

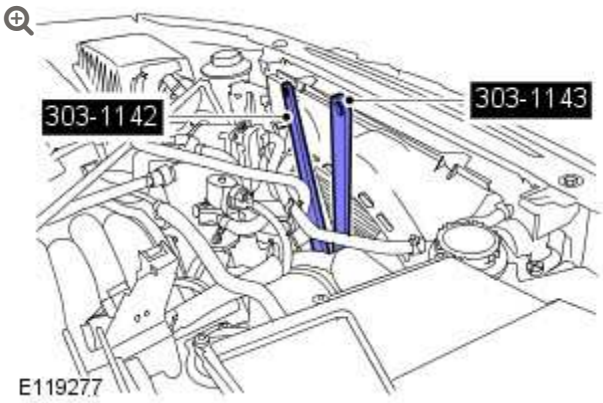

Special Tool(s): 303-1142, 303-1143

Torque: **65 Nm**

12.

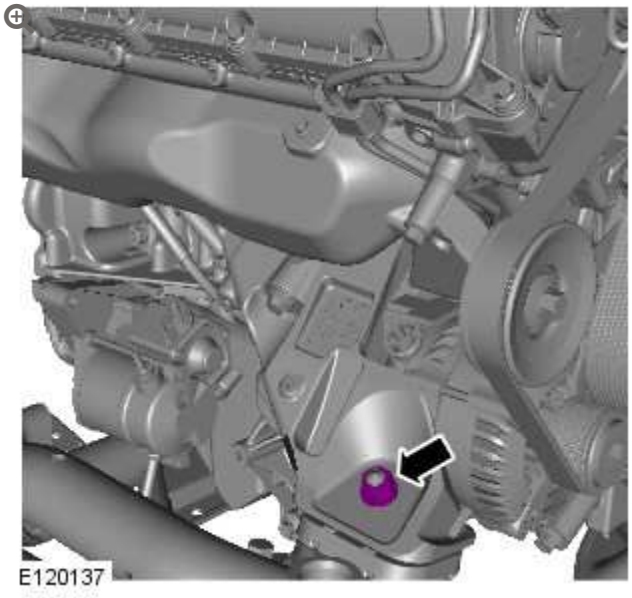

13. Using a suitable hydraulic jack, raise and support the engine.

14.

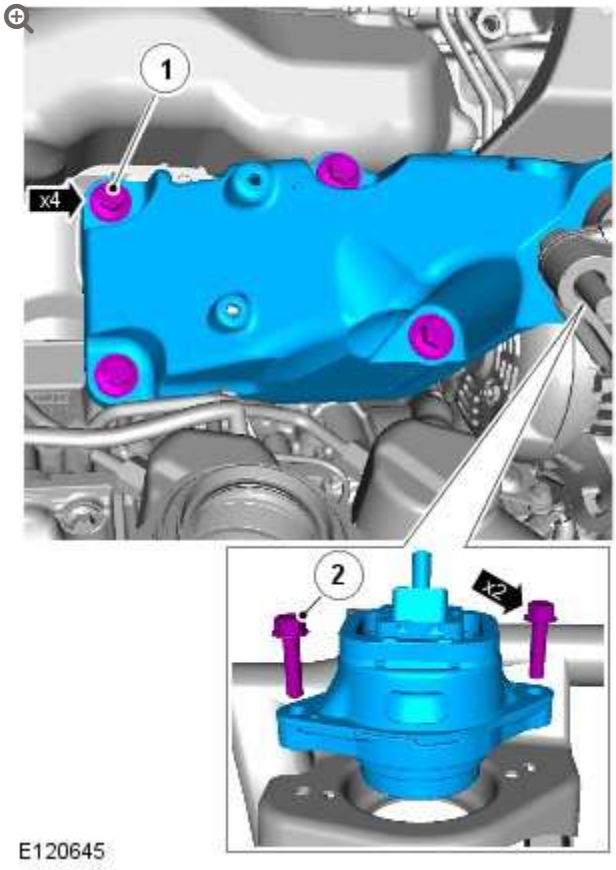

INSTALLATION

All vehicles

1.

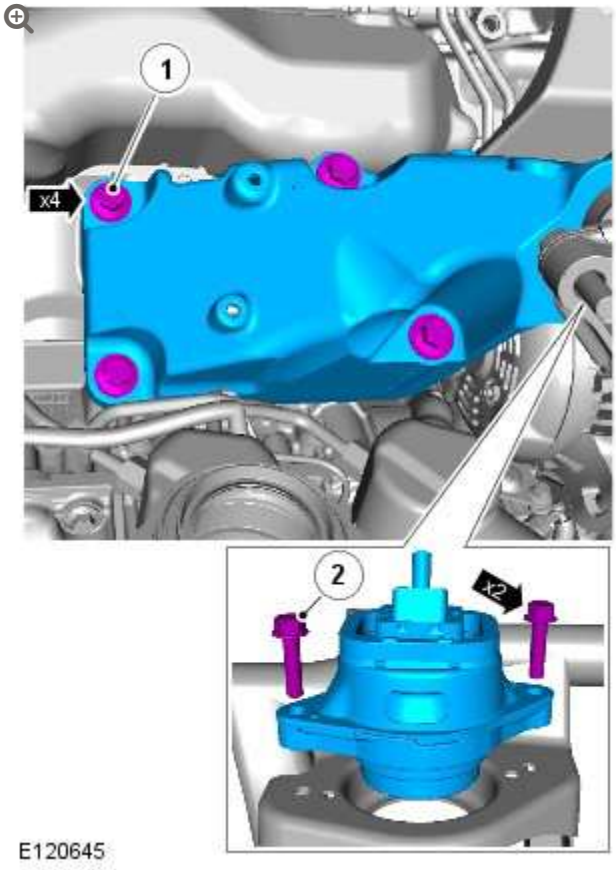

- *Torque:*
  - 1 **45 Nm**
  - 1 **60°**
  - 2 **56 Nm**

2.

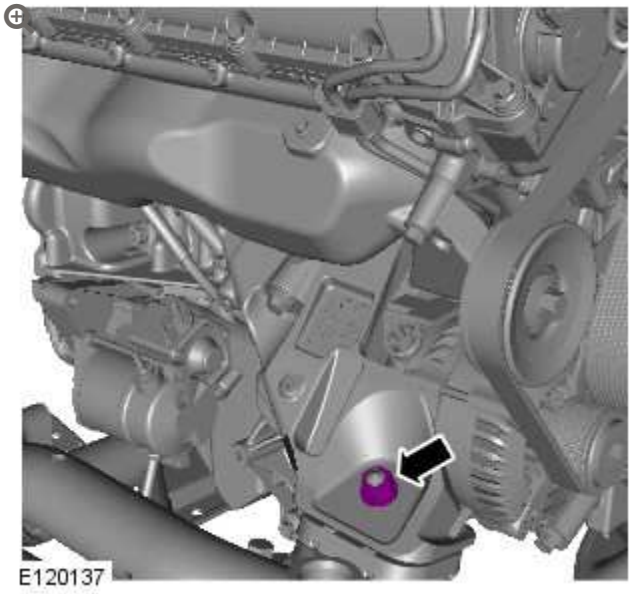

3.

CAUTION:

Always protect the cooling pack elements to prevent accidental damage.

NOTES:

- The thread is right handed.
- Some variation in the illustrations may occur, but the essential information is always correct.

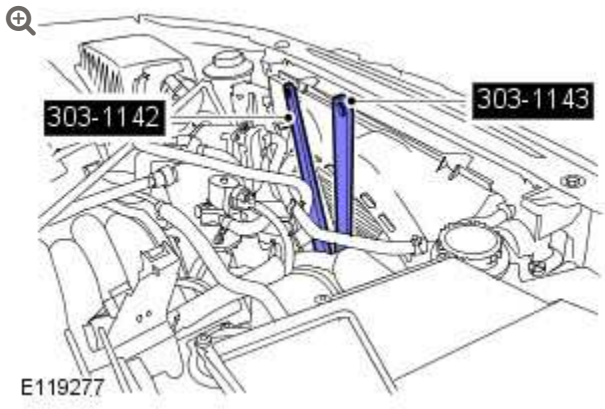

Special Tool(s): 303-1142, 303-1143

Torque: **65 Nm**

ℹ	Right-hand drive vehicles

4.

NOTE:

Some variation in the illustrations may occur, but the essential information is always correct.

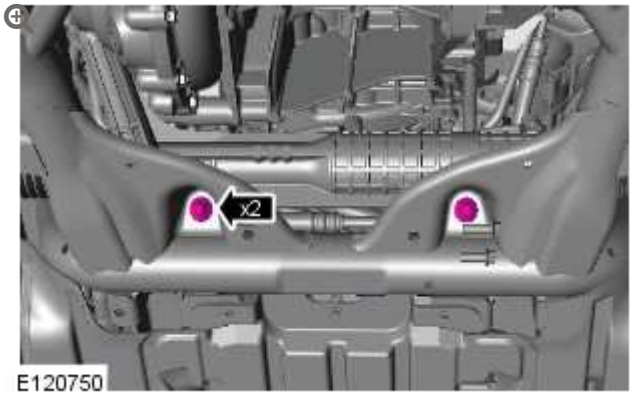

Torque: **100 Nm**

5.

NOTE:

Some variation in the illustrations may occur, but the essential information is always correct.



6.

CAUTION:

Do not turn the steering wheel with the steering column lower shaft disconnected as damage to the clockspring and steering wheel switches may occur.

NOTE:

Some variation in the illustrations may occur, but the essential information is always correct.

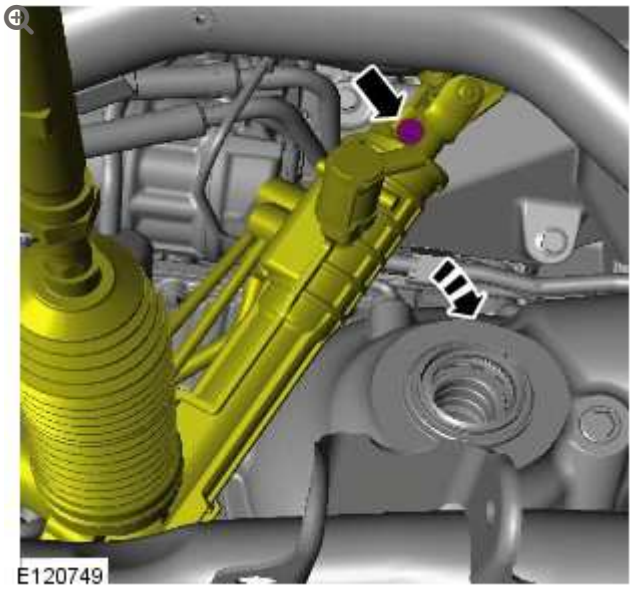

- Align the steering wheel to straight ahead.
- Return the steering column to its original position.

All vehicles

7.

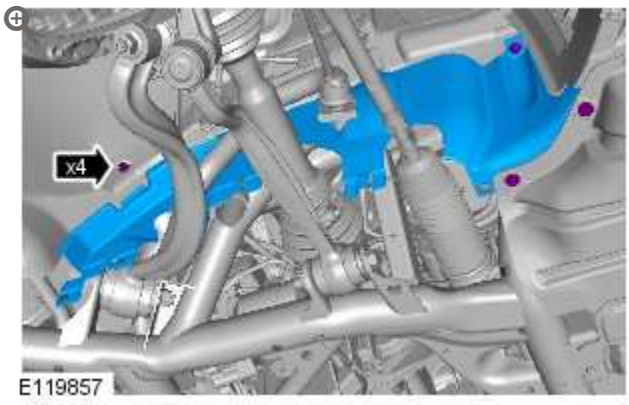

8.

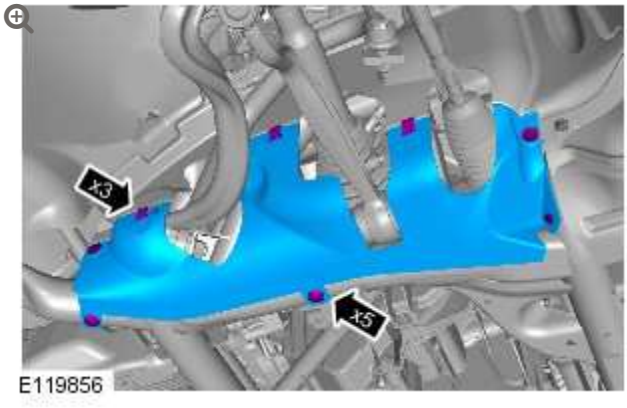

9. Refer to: Air Cleaner RH (303-12, Removal and Installation).

10. Refer to: Air Cleaner Outlet Pipe T-Connector (303-12, Removal and Installation).

11. Refer to: Exhaust System (309-00, Removal and Installation).

12. Connect the battery ground cable.
Refer to: Specifications (414-00, Specifications).

ENGINE – V8 S/C 5.0L PETROL

ENGINE OIL DRAINING AND FILLING (G1226185)

GENERAL PROCEDURES

12.60.05	ENGINE OIL – DRAIN AND REFILL – INCLUDES OIL FILTER RENEW	5000 CC, AJ V8	0.8	USED WITHINS

DRAINING

WARNING:

The spilling of hot engine oil is unavoidable during this procedure, care must be taken to prevent scalding.

CAUTION:

Correct installation of the oil filler cap can be obtained by tightening the cap until hard stop.

NOTE:

Clean the components general area prior to dismantling.

1. **CAUTION:**

   Make sure the engine is warm.

   Start the engine and allow to run for 10 minutes, stop the engine.

2. 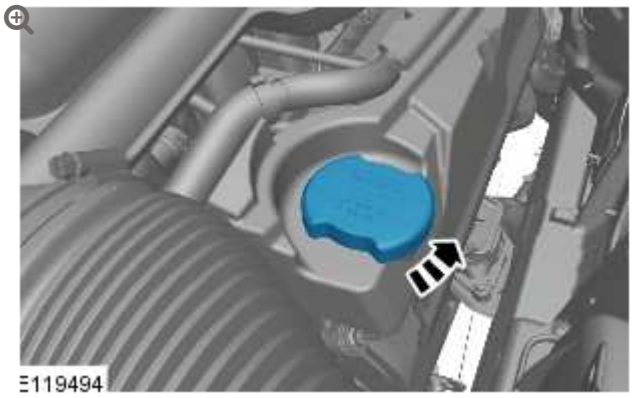

3. Refer to: Engine Cover - 5.0L (501-05, Removal and Installation).

4. 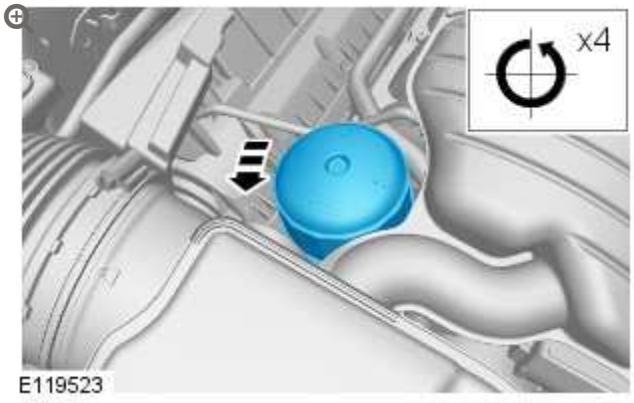

- Loosen the element cover 4 complete turns to allow engine oil to drain from the filter cover.
- Make sure that the O-ring seal is exposed.

5.

NOTE:

Allow 10 minutes for the engine oil to drain from the oil filter housing.

6.

NOTE:

Remove and discard the O-ring seal.



7.

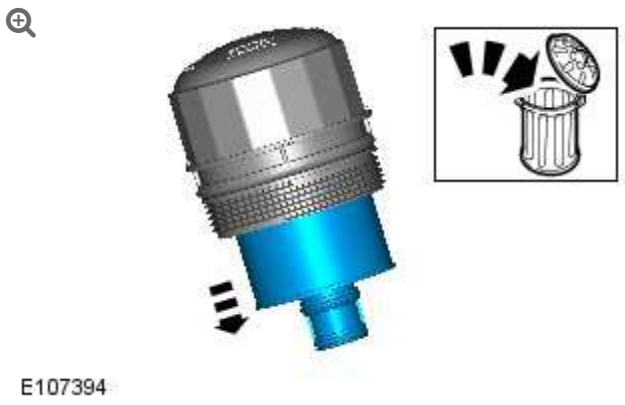

Remove and discard the oil filter element.

8. **WARNING:**

> Do not work on or under a vehicle supported only by a jack. Always support the vehicle on safety stands.

Raise and support the vehicle.

9. Refer to: Engine Undershield (501-02, Removal and Installation).

10. **CAUTIONS:**

> - Be prepared to collect escaping oil.
> - Allow at least 10 minutes for the engine oil to drain.

NOTE:

> Discard the sealing washer.

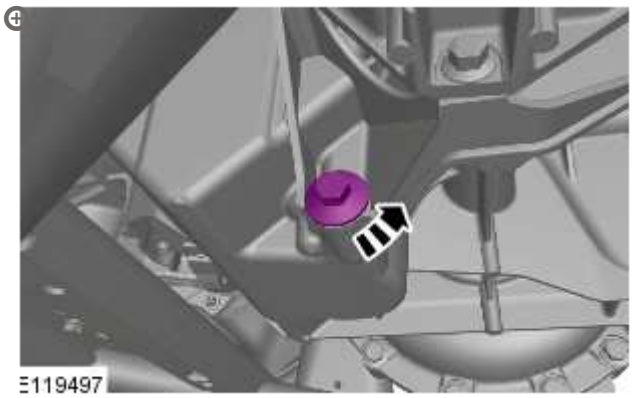

FILLING

11.

CAUTION:

Make sure that the area around the component is clean and free of foreign material.

NOTE:

Install a new sealing washer.

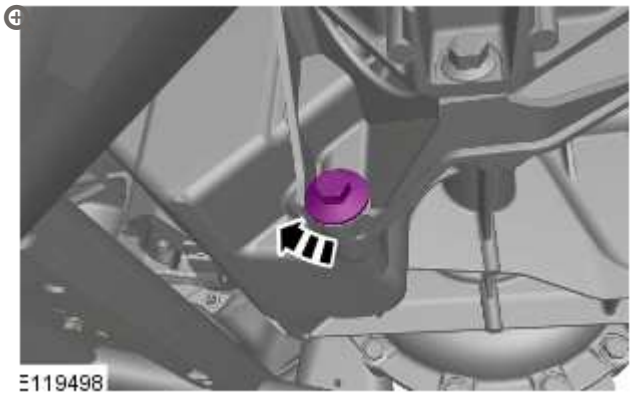

Torque: **24 Nm**

12.

Refer to: Engine Undershield (501-02, Removal and Installation).

13. **NOTE:**

Install new O-ring seals.

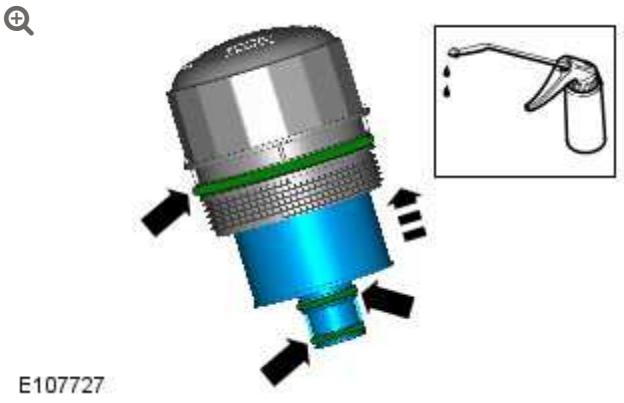

Lubricate the oil filter element O-ring seal with clean engine oil.

14. **CAUTION:**

Tighten the component finger tight first.

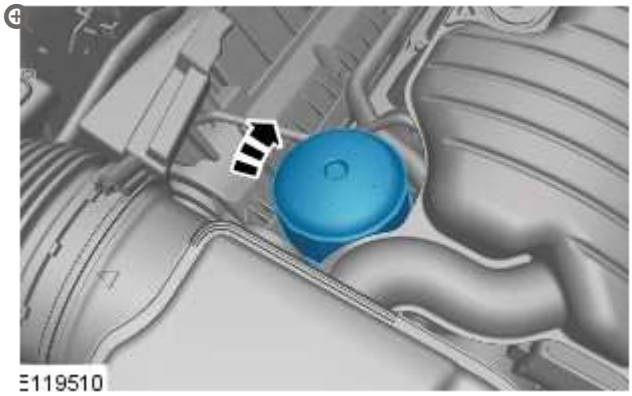

- *Torque:* **25 Nm**

15.

CAUTION:

Make sure that the vehicle is left for 5 minutes from filling with oil and that the engine oil level is reading at least minimum (by following Steps 9-16), before starting the engine.

- Fill the engine with oil - for filling values on vehicles without supercharger:
  Refer to: Specifications (303-01A Engine - V8 5.0L Petrol, Specifications).
- Fill the engine with oil - for filling values on vehicles with supercharger:
  Refer to: Specifications (303-01B Engine - V8 S/C 5.0L Petrol, Specifications).
- Clean any residual engine oil from the oil filler cap area.

16.

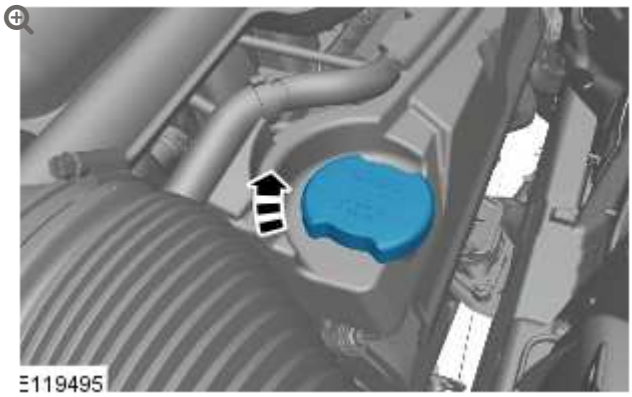

17.

CAUTION:

Make sure that the vehicle has been left for 5 minutes from filling with oil.

Follow the Steps 9-16 before starting the engine.

18.

- Start the engine and allow to run for 10 minutes, stop the engine.
- Check for leaks.

19.

CAUTIONS:

- Make sure that the selector lever and the gearshift mechanism are in the park (P) position.
- Make sure that the hood is open.

- Turn the ignition on.

20.



E122817

- Press the right-hand directional button to access the instrument cluster menu.

21.

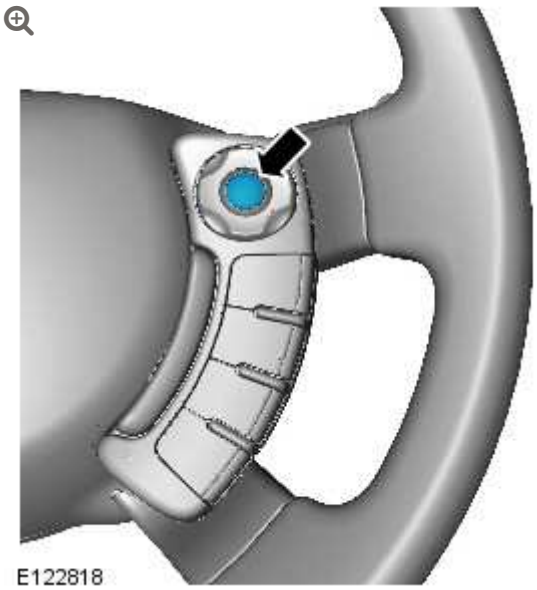

E122818

- Press the right-hand OK button.

22.

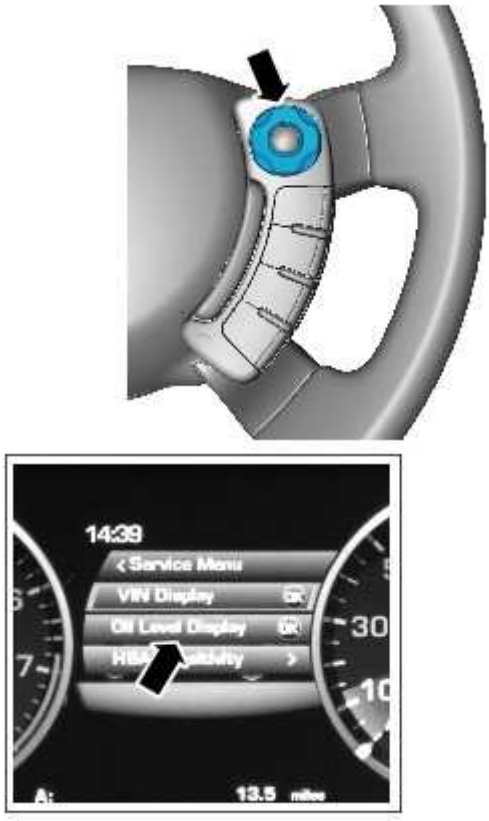

E122819

- Press the right-hand directional button to access the Oil Level Display.

23.



E122820

- Press the right-hand OK button and follow the instructions.

24.

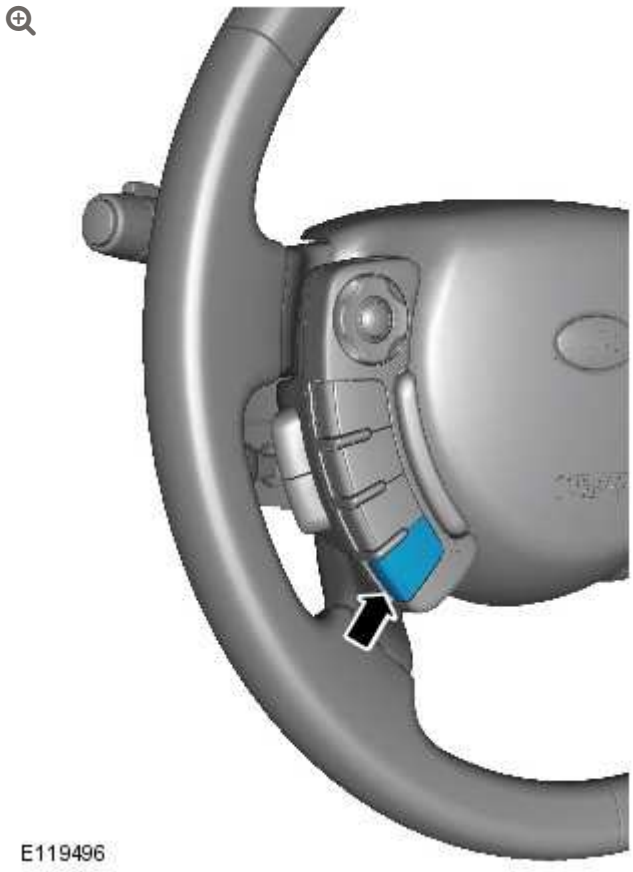

- Press the cruise control cancel button twice within 2 seconds.

25.



E122821

- The message center display will revert to the normal display in the trip computer.
- Press the right-hand OK button and follow the instructions.
- Check that the oil level display shows an oil level reading.
- Only after having started and run the engine for 10 minutes (as indicated in Step 8), switch off the engine, then stabilizing for 10 minutes, take a reading from the oil level display and, if necessary top up with engine oil.

26.

NOTE:

If instructed to follow Steps 9-16 in a previous step, return to Step 8 and continue the procedure.

Turn the ignition off.

27. Allow 10 minutes for the engine oil level to stabilize if there has been additional oil top up.

28. **NOTE:**

> The following steps are to update the average oil level value.

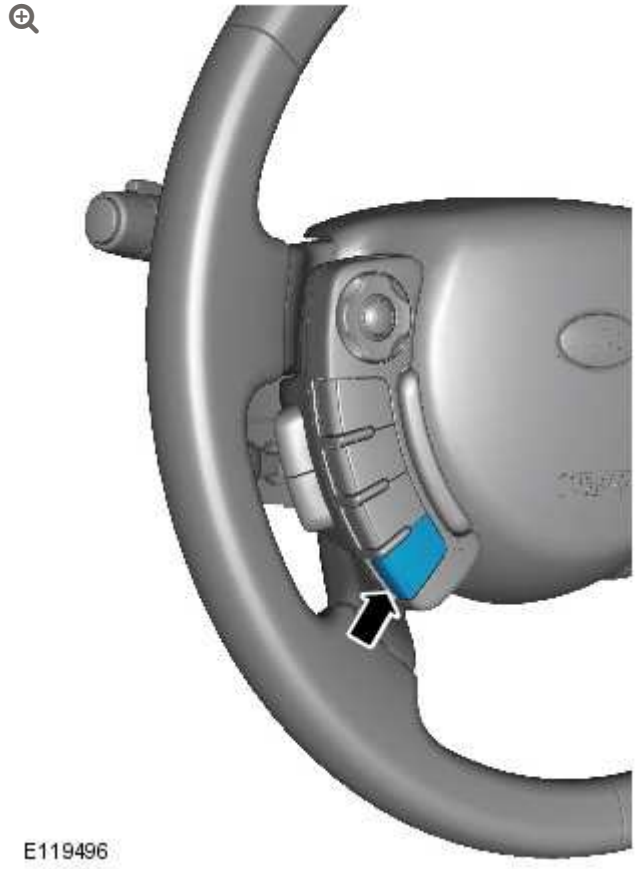

- Turn the ignition on.
- Press and hold the cruise control cancel button for more than 2 seconds.

29. - The message center display will revert to the normal display in the trip computer.

30. Turn the ignition off.

31. Turn the ignition on.

32. 

E122817

    - Press the right-hand directional button to access the instrument cluster menu.

33.

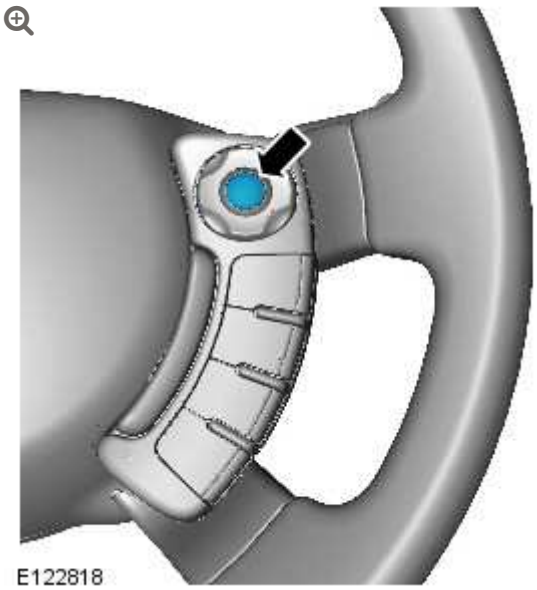
E122818

- Press the right-hand OK button.

34.

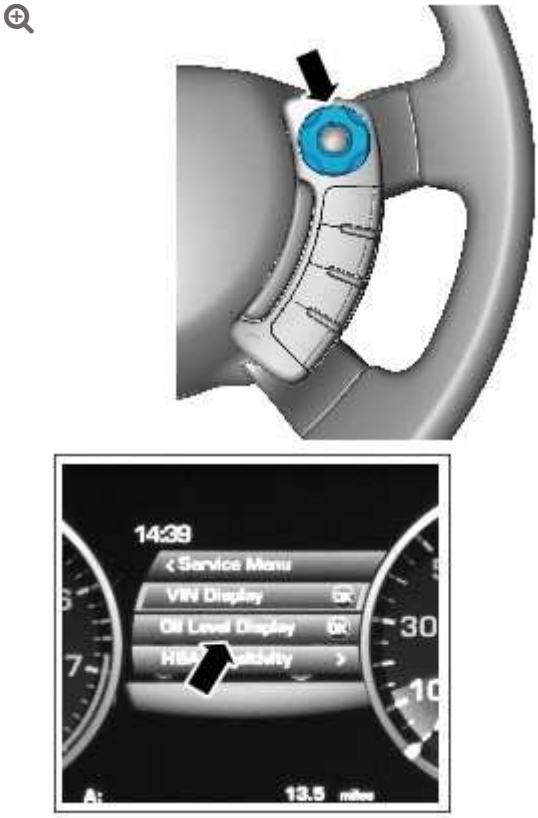

E122819

- Press the right-hand directional button to access the Oil Level Display.

35.



E122821

- Press the right-hand OK button and follow the instructions.
- Make sure that the average oil level value has now been updated.

36. Refer to: Engine Cover - 5.0L (501-05, Removal and Installation).

ENGINE – V8 S/C 5.0L PETROL

ENGINE OIL VACUUM DRAINING AND FILLING

(G1226175)

GENERAL PROCEDURES

DRAINING

WARNING:

The spilling of hot engine oil is unavoidable during this procedure, care must be taken to prevent scalding.

CAUTION:

Correct installation of the oil filler cap can be obtained by tightening the cap until hard stop.

NOTES:

- Make sure that the vehicle is parked on level ground.
- Clean the components general area prior to dismantling.

1. - Start the engine and allow to run for 10 minutes, stop the engine.

2. **CAUTION:**

   Allow 10 minutes from turning the engine off before starting oil extraction.



3. Refer to: Engine Cover - 5.0L (501-05, Removal and Installation).

4.

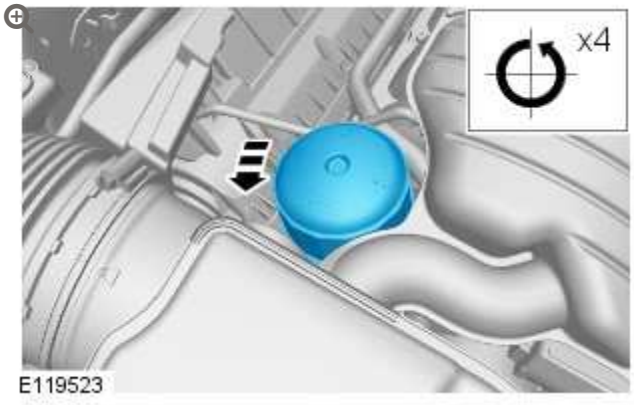

- Loosen the element cover 4 complete turns to allow engine oil to drain from the filter cover.

5.

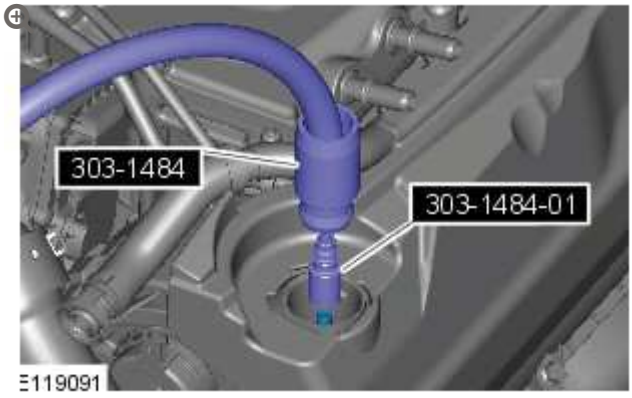

- Using the oil vacuum pump drain the oil out through the oil extraction tube.

6.

- Remove the oil vacuum pump.

7.



8.

NOTE:

Discard the O-ring seals.

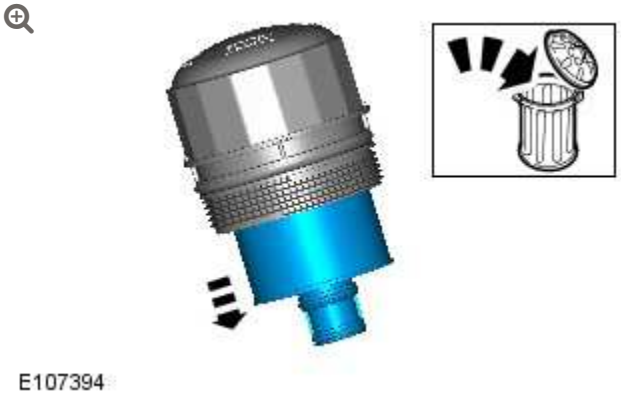

FILLING

9.

NOTE:

Install new O-ring seals.

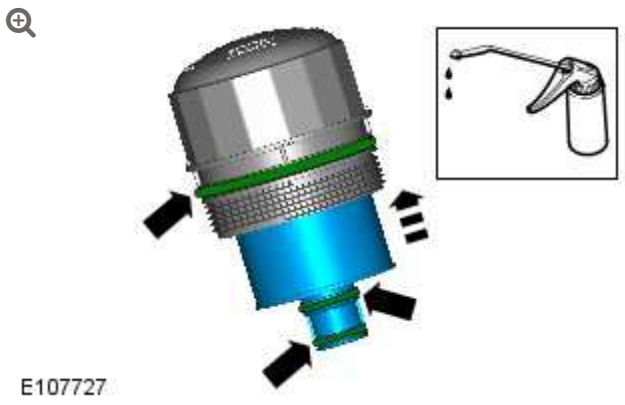

Lubricate the oil filter element O-ring seal with clean engine oil.

10.

CAUTION:

Tighten the component finger tight first.

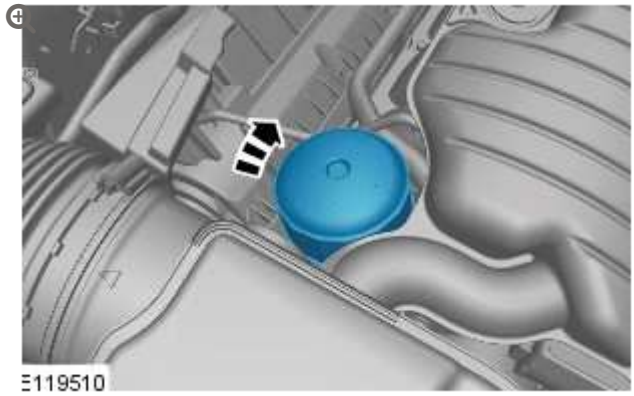

- *Torque:* **25 Nm**

11.

CAUTION:

Make sure that the vehicle is left for 5 minutes from filling with oil and that the engine oil level is reading at least minimum (by following Steps 7-14), before starting the engine.

- Fill the engine with oil - for filling values on vehicles without supercharger:
  Refer to: Specifications (303-01B, Specifications).
- Fill the engine with oil - for filling values on vehicles with supercharger:
  Refer to: Specifications (303-01C, Specifications).
- Clean any residual engine oil from the oil filler cap area.

12.

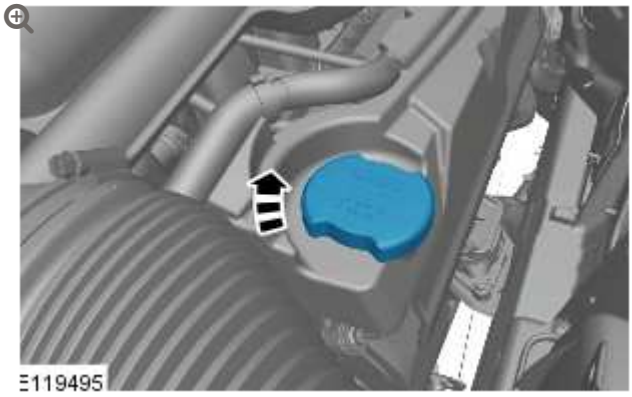

13.

CAUTION:

Make sure that the vehicle has been left for 5 minutes from filling with oil.

Follow the Steps 7-14 before starting the engine.

14.

- Start the engine and allow to run for 10 minutes, stop the engine.
- Check for leaks.

15.

CAUTIONS:

- Make sure that the selector lever and the gearshift mechanism are in the park (P) position.
- Make sure that the hood is open.

- Turn the ignition on.

16.



E122817

- Press the right-hand directional button to access the instrument cluster menu.

17.

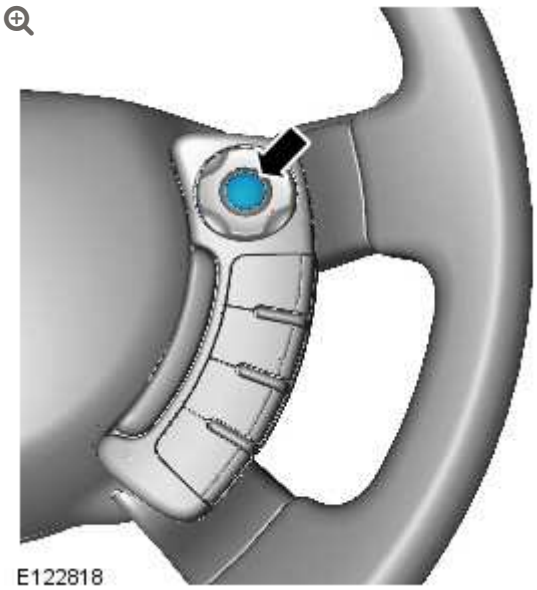
E122818

- Press the right-hand OK button.

18.

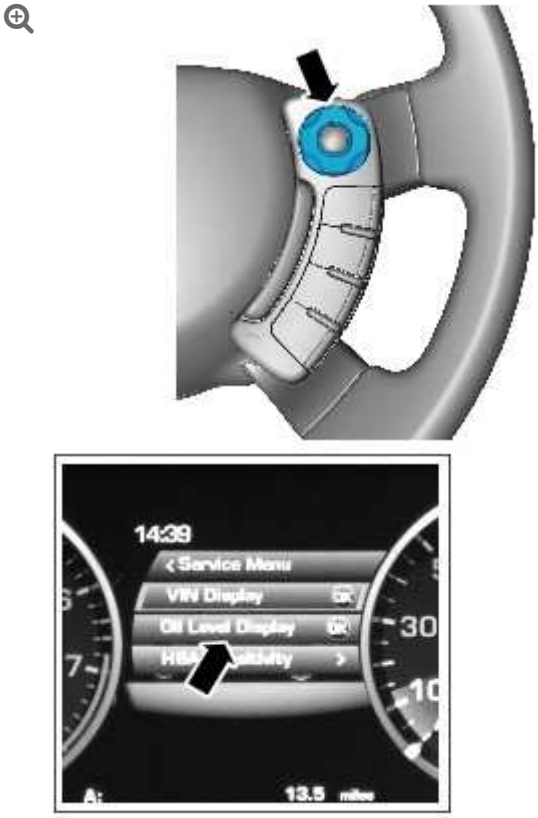

E122819

- Press the right-hand directional button to access the Oil Level Display.

19.



E122820

- Press the right-hand OK button and follow the instructions.

20.

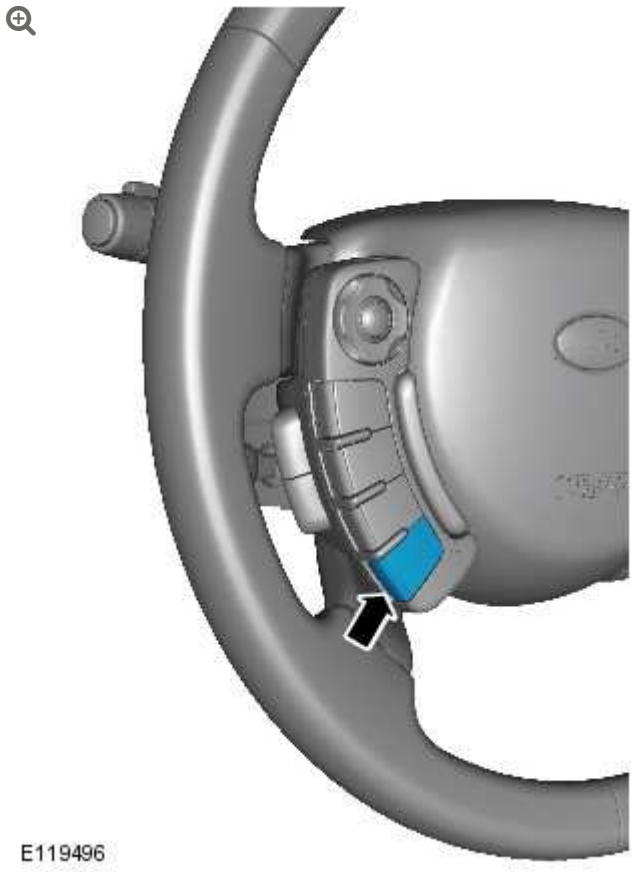

- Press the cruise control cancel button twice within 2 seconds.

21.



E122821

- The message center display will revert to the normal display in the trip computer.
- Press the right-hand OK button and follow the instructions.
- Check that the oil level display shows an oil level reading.
- Only after having started and run the engine for 10 minutes (as indicated in Step 6), switch off the engine, then stabilizing for 10 minutes, take a reading from the oil level display and, if necessary top up with engine oil.

22.

NOTE:

If instructed to follow Steps 7-14 in a previous step, return to Step 6 and continue the procedure.

Turn the ignition off.

23. Allow 10 minutes for the engine oil level to stabilize if there has been additional oil top up.

24. **NOTE:**

> The following steps are to update the average oil level value.

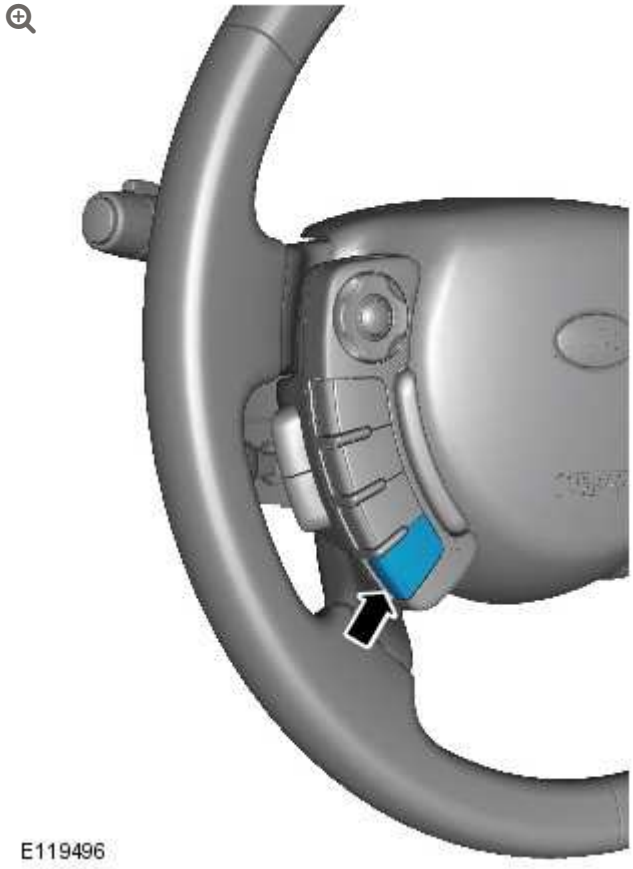

- Turn the ignition on.
- Press and hold the cruise control cancel button for more than 2 seconds.

25. - The message center display will revert to the normal display in the trip computer.

26. Turn the ignition off.

27. Turn the ignition on.

28. 

E122817

    - Press the right-hand directional button to access the instrument cluster menu.

29.

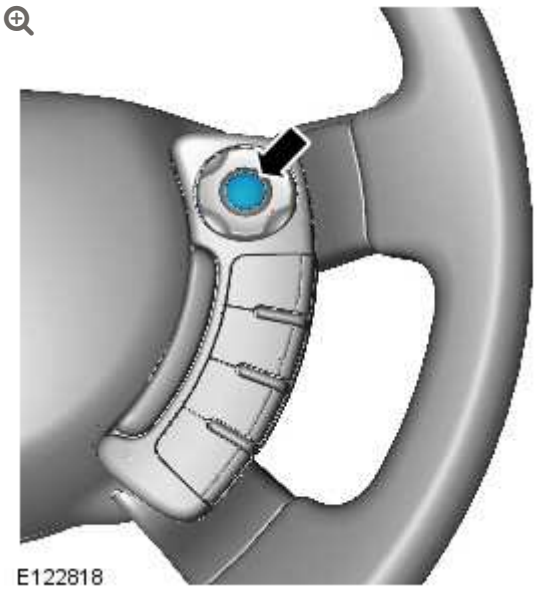
E122818

- Press the right-hand OK button.

30.

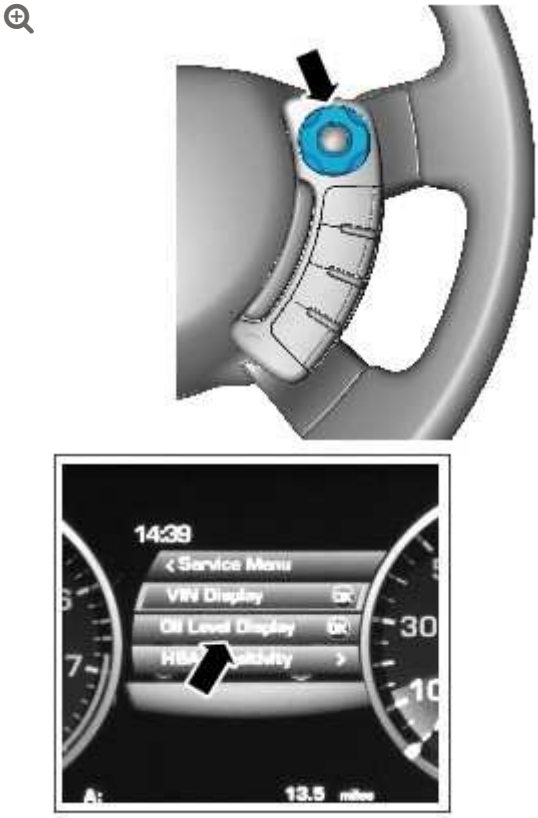

E122819

- Press the right-hand directional button to access the Oil Level Display.

31.



E122821

- Press the right-hand OK button and follow the instructions.
- Make sure that the average oil level value has now been updated.

32. Refer to: Engine Cover - 5.0L (501-05, Removal and Installation).

ENGINE – V8 S/C 5.0L PETROL

EXHAUST MANIFOLD LH

(G1224600)

REMOVAL AND INSTALLATION

30.15.10	MANIFOLD – EXHAUST – LH/FRONT/EACH – RENEW	5000 CC, AJ V8, SUPERCHARGED	2.9	USED WITHINS	+

SPECIAL TOOL(S)



303-1444-01

Exhaust Manifold Installation Guide Pins - Threaded



303-1444-02

Exhaust Manifold Installation Guide Pins - Unthreaded

REMOVAL

NOTES:

- Removal steps in this procedure may contain installation details.
- Some variation in the illustrations may occur, but the essential information is always correct.

1. Disconnect the battery ground cable.
   Refer to: Specifications (414-00, Specifications).

2. **WARNING:**

   Do not work on or under a vehicle supported only by a jack. Always support the vehicle on safety stands.

   Raise and support the vehicle.

3.

Refer to: Power Steering Pump - 5.0L (211-02, Removal and Installation).

4. Refer to: Exhaust System (309-00, Removal and Installation).

5. 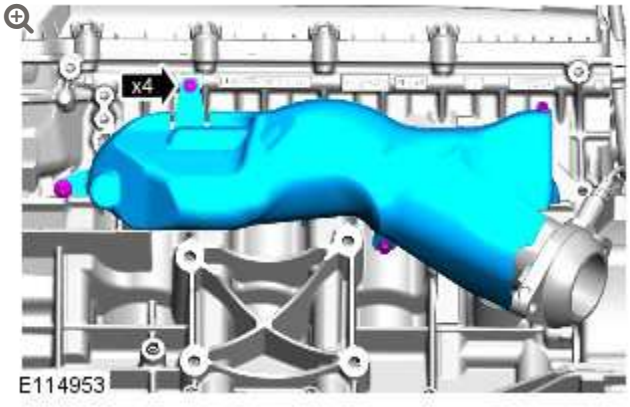

6. **CAUTION:**

Discard the bolts.

NOTES:

- Discard the gasket.
- Make sure that the position of the spacers is noted before removal of the manifold.

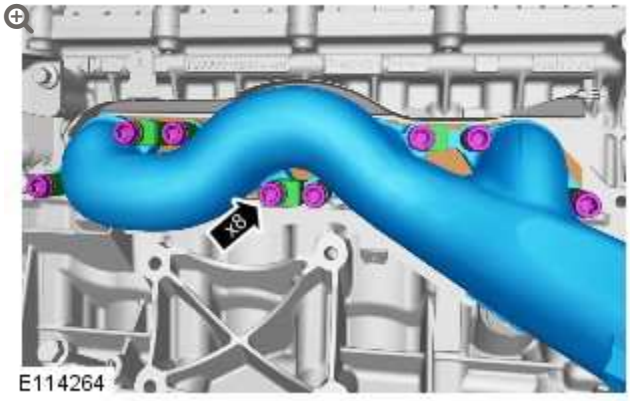

7. **NOTE:**

Do not disassemble further if the component is removed for access only.

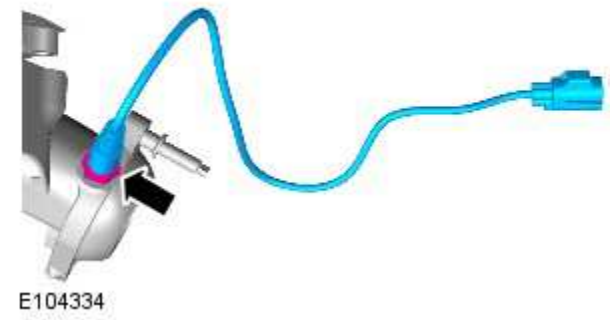

8. **NOTE:**

Remove and discard the gasket.

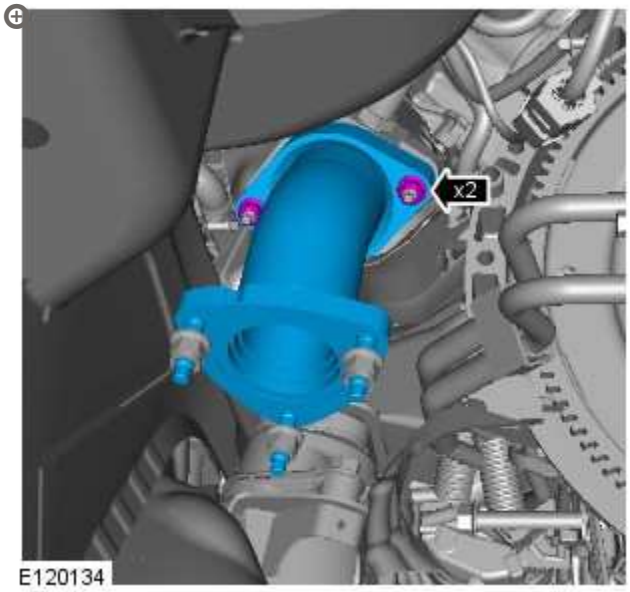

9.

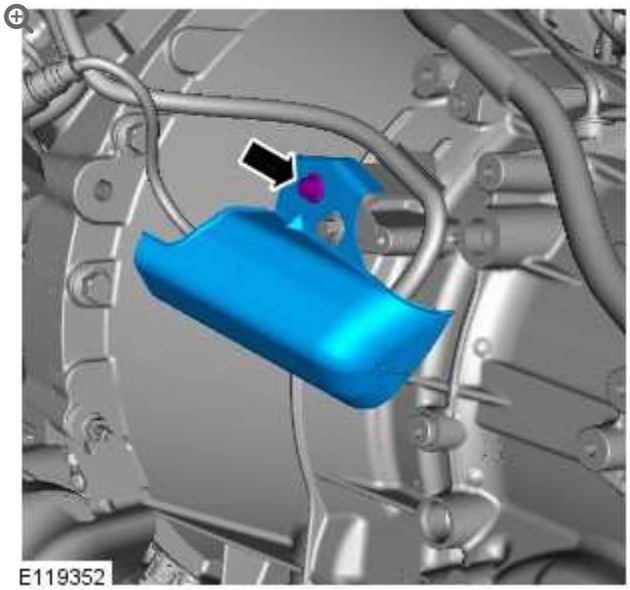

10.

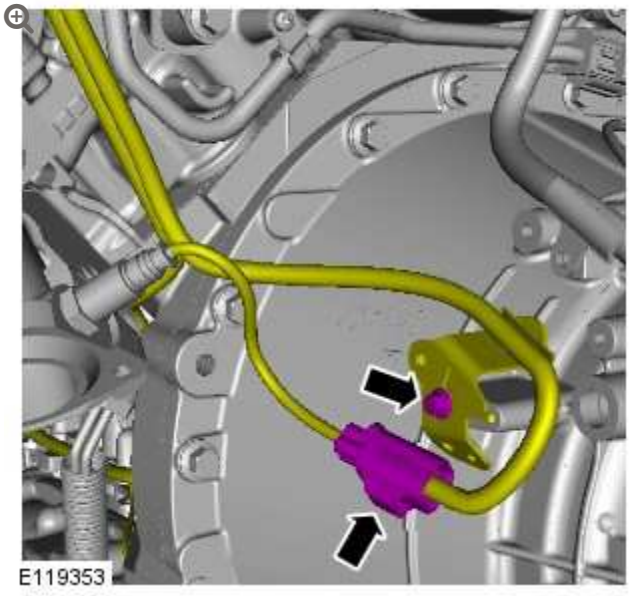

INSTALLATION

1.

CAUTIONS:

- Make sure that the mating faces are clean and free of foreign material.
- Make sure the anti-seize compound does not contact the catalyst monitor sensor tip.
- If accidentally dropped or knocked install a new sensor.
- Make sure the catalyst monitor sensor wiring harness is not twisted more than 180 degrees and is not in contact with either the exhaust or driveshaft.

NOTE:

If the original sensor is to be installed, apply lubricant meeting specification ESE-M12A4-A to the thread of the sensor.

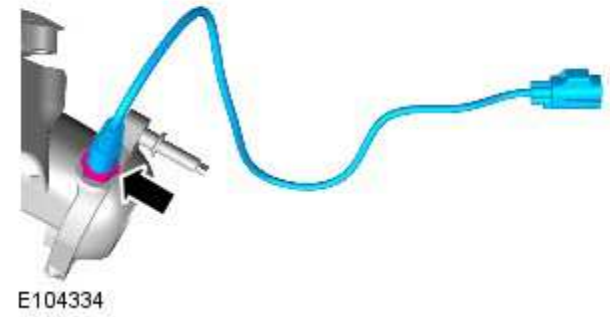

Torque: **45 Nm**

2.

NOTE:

Install a new gasket.

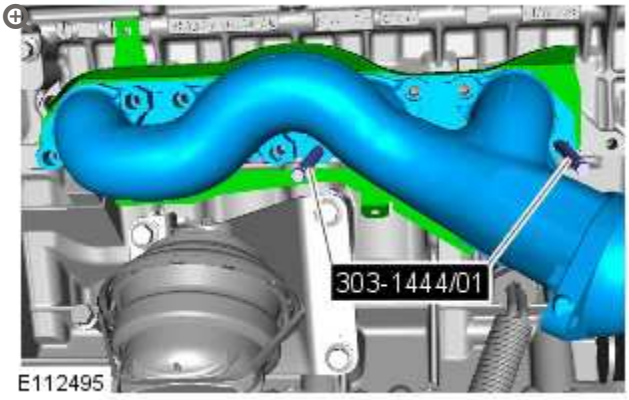

Special Tool(s): 303-1444-01

3.

NOTE:

If a new cylinder head is installed use the special tools in the illustration.

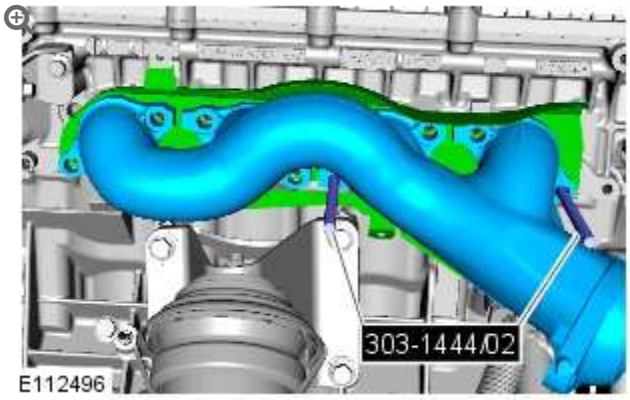

Special Tool(s): 303-1444-02

4.

CAUTION:

Make sure that new bolts are installed.

NOTE:

Install the spacers in the noted position.

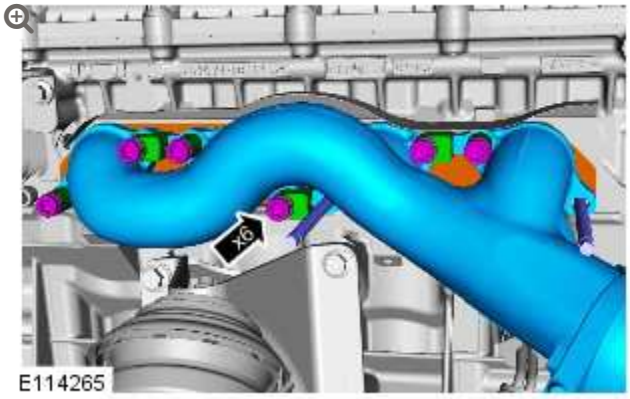

Torque: **10 Nm**

5.

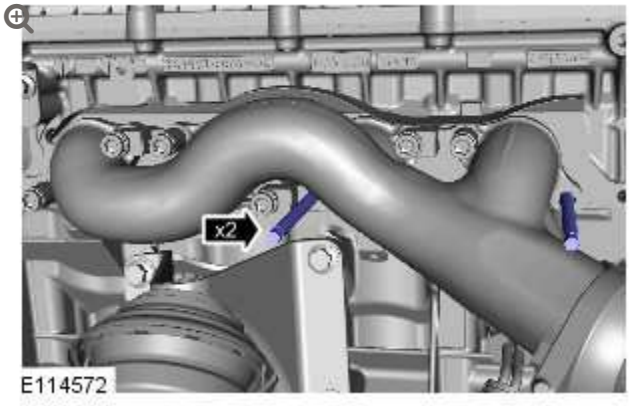

Remove the special tool.

6.

CAUTION:

Make sure that new bolts are installed.

NOTE:

Install the spacers in the noted position.

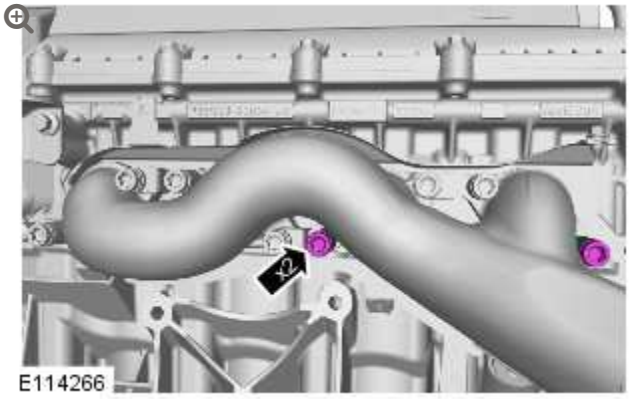

Torque: **10 Nm**

7.

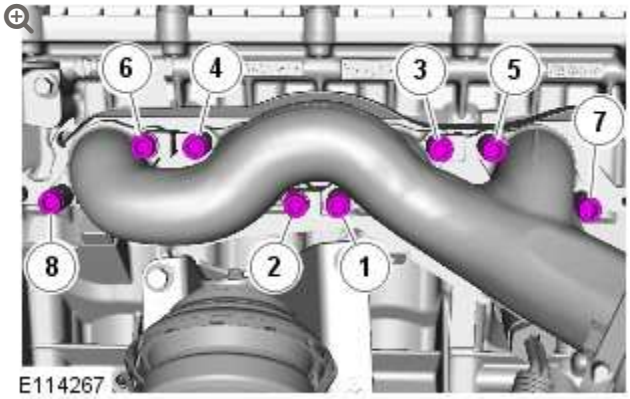

Torque: **18 Nm**

8.

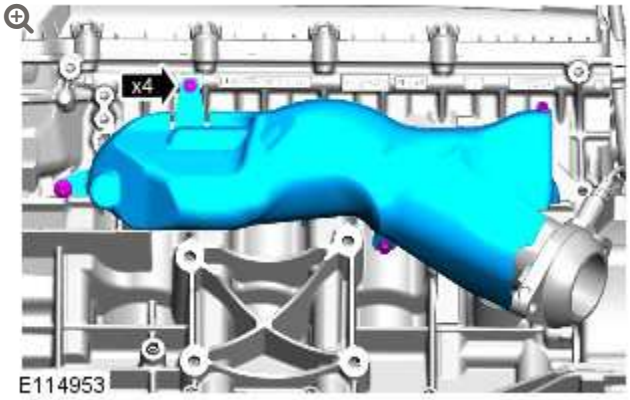

Torque: **3 Nm**

9.

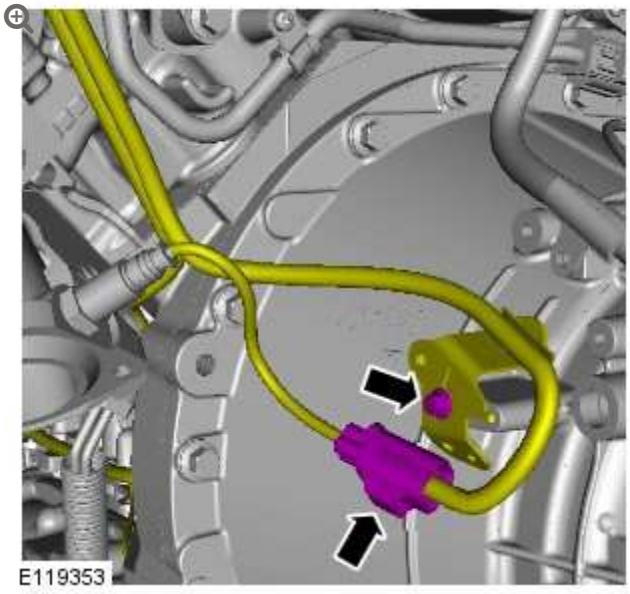

Torque: **10 Nm**

10.

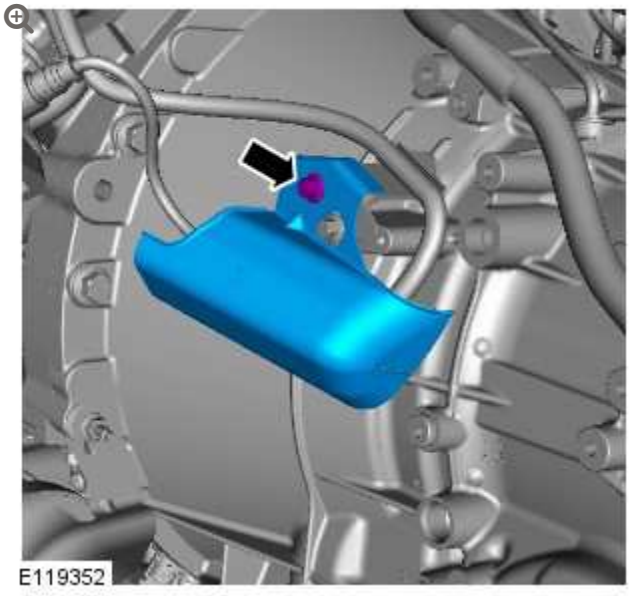

Torque: **10 Nm**

11. Refer to: Exhaust System (309-00, Removal and Installation).

12. Refer to: Power Steering Pump - 5.0L (211-02, Removal and Installation).

13. Connect the battery ground cable.

Refer to: Specifications (414-00, Specifications).

ENGINE – V8 S/C 5.0L PETROL

EXHAUST MANIFOLD RH

(G1224601)

REMOVAL AND INSTALLATION

30.15.11	MANIFOLD – EXHAUST – RH/REAR - RENEW	5000 CC, AJ V8, SUPERCHARGED	1.1	USED WITHINS	+

SPECIAL TOOL(S)



303-1444-01

Exhaust Manifold Installation Guide Pins - Threaded



303-1444-02

Exhaust Manifold Installation Guide Pins - Unthreaded

REMOVAL

NOTE:

Some variation in the illustrations may occur, but the essential information is always correct.

1. Disconnect the battery ground cable.
   Refer to: Specifications (414-00, Specifications).

2. **WARNING:**

   Make sure to support the vehicle with axle stands.

   Raise and support the vehicle.

3. Refer to: Exhaust System (309-00, Removal and Installation).

4.

NOTE:

Remove and discard the gasket.

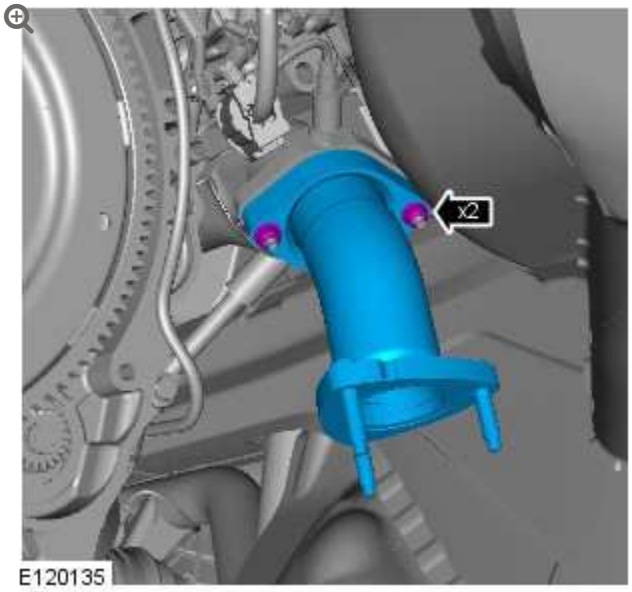

5.

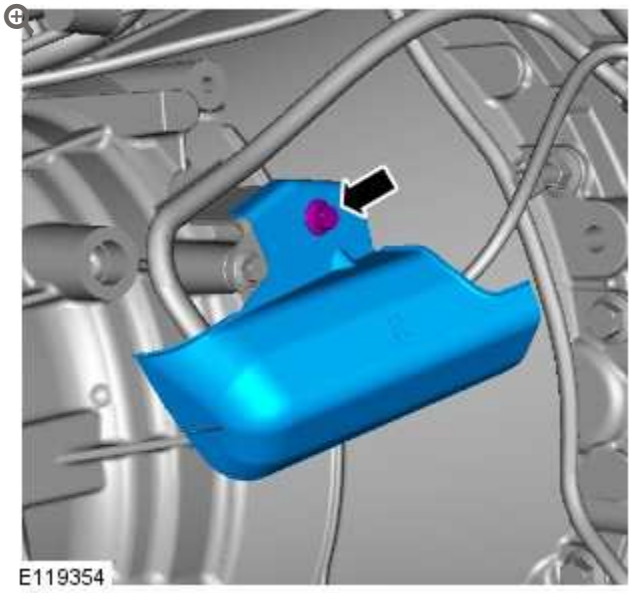

6.

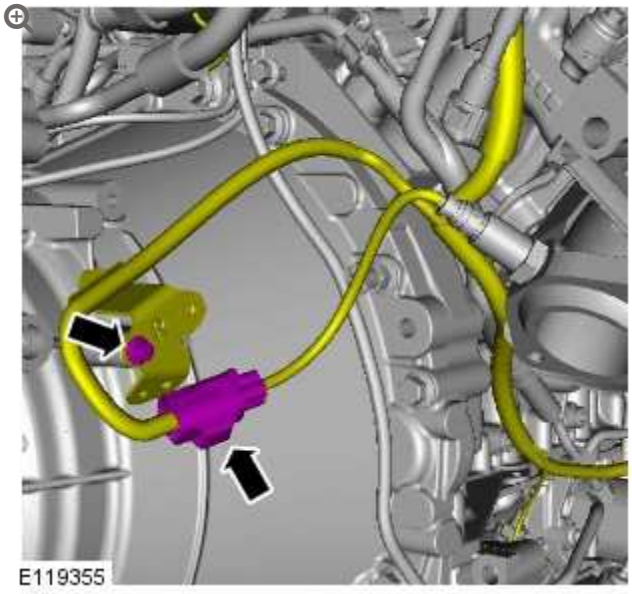

7.

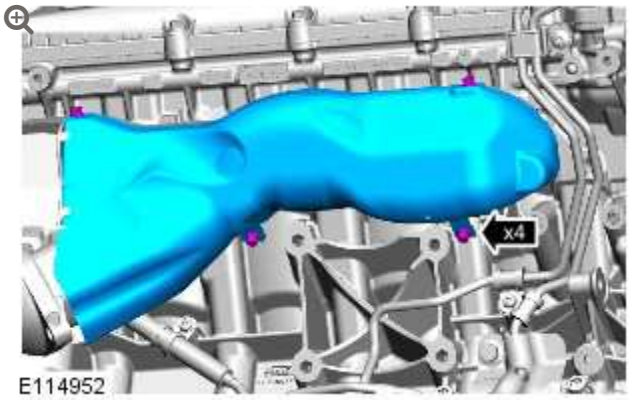

8.

CAUTIONS:

- Discard the bolts.
- LH illustration shown, RH is similar.

NOTES:

- Discard the gasket.
- Make sure that the position of the spacers is noted before removal of the manifold.

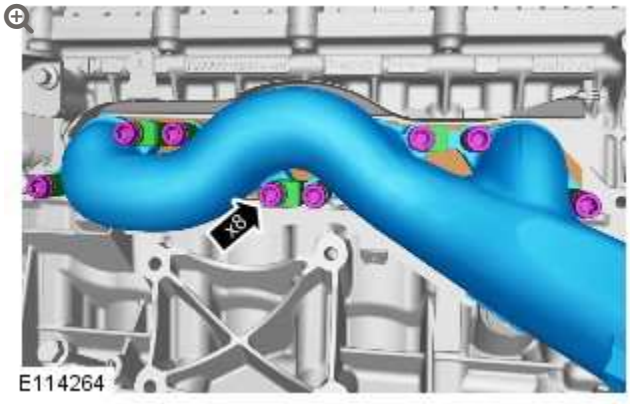

9.

NOTE:

Do not disassemble further if the component is removed for access only.

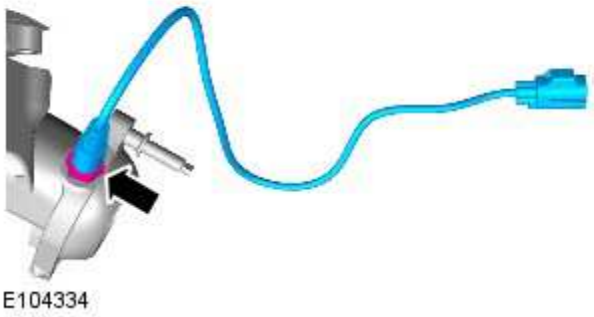

INSTALLATION

1.

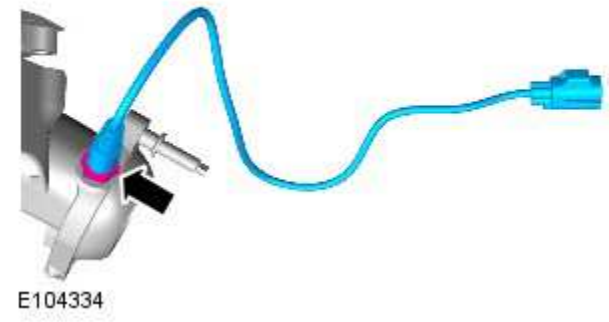

Torque: **45 Nm**

2.

CAUTION:

LH illustration shown, RH is similar.

NOTE:

Install a new gasket.

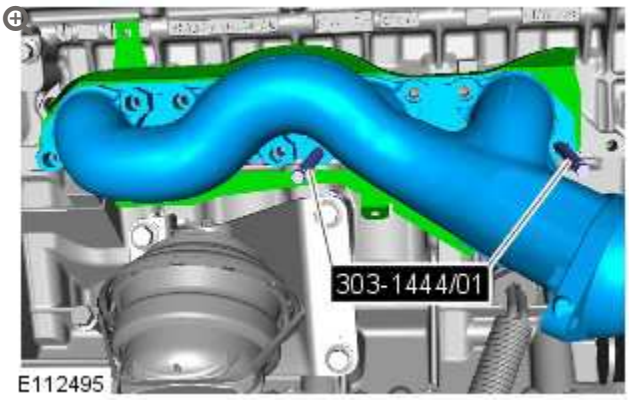

Install the special tool.

Special Tool(s): 303-1444-01

3.

CAUTION:

LH illustration shown, RH is similar.

NOTE:

If a new cylinder head is installed use the special tools in the illustration.

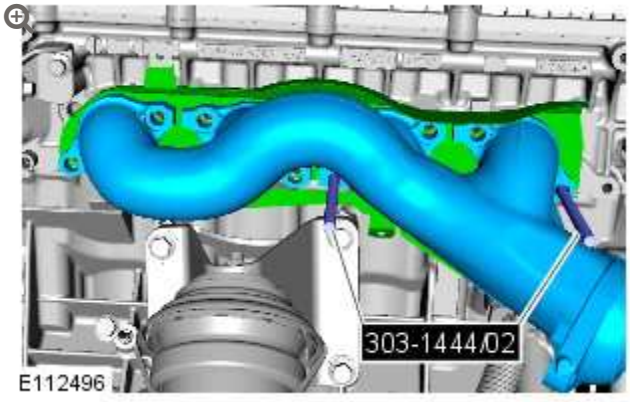

Special Tool(s): 303-1444-02

4.

CAUTIONS:

- Make sure that new bolts are installed.
- LH illustration shown, RH is similar.

NOTE:

Install the spacers in the noted position.

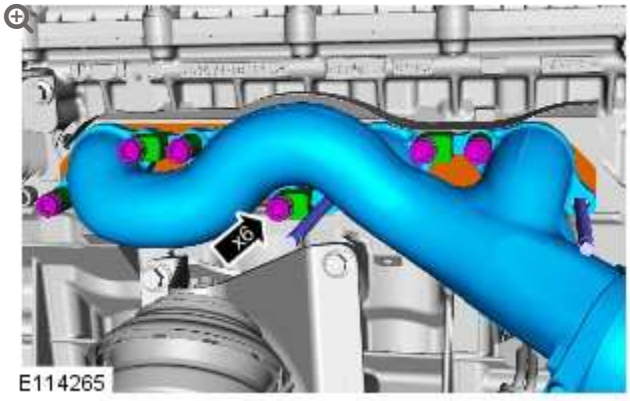

Torque: **10 Nm**

5.

CAUTION:

LH illustration shown, RH is similar.

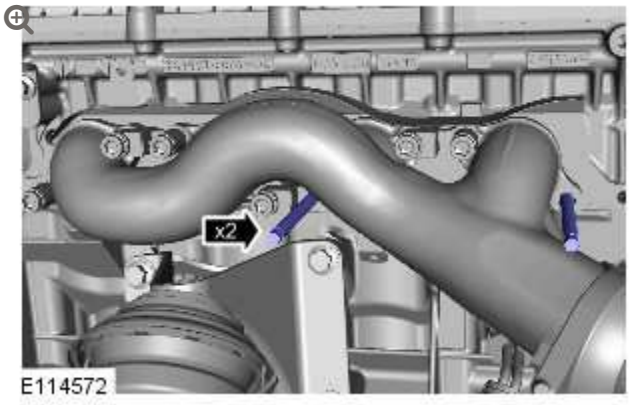

Remove the special tool.

6.

CAUTIONS:

- Make sure that new bolts are installed.
- LH illustration shown, RH is similar.

NOTE:

Install the spacers in the noted position.

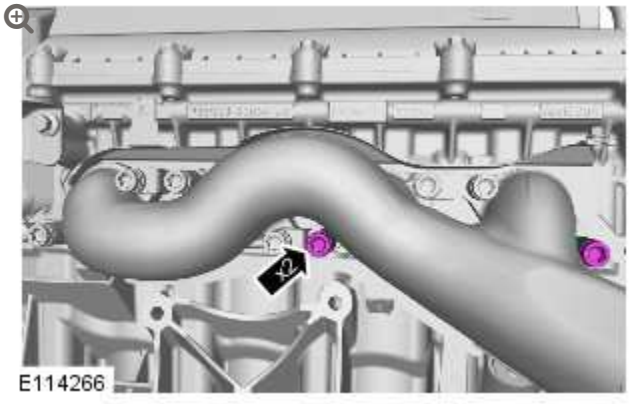

Torque: **10 Nm**

7.

CAUTION:

LH illustration shown, RH is similar.

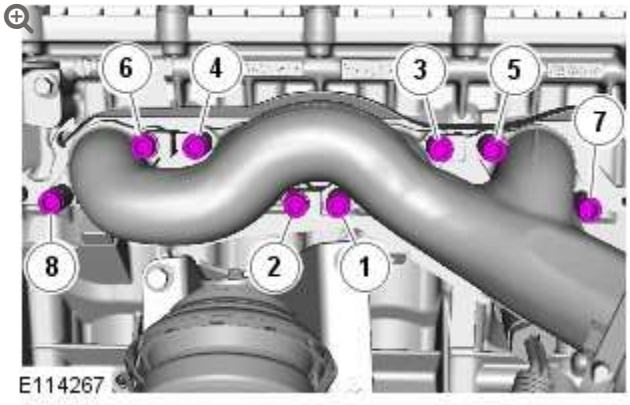

Torque: **18 Nm**

8.

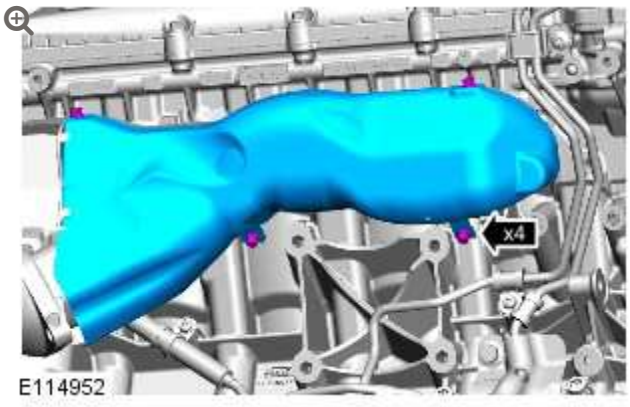

9.

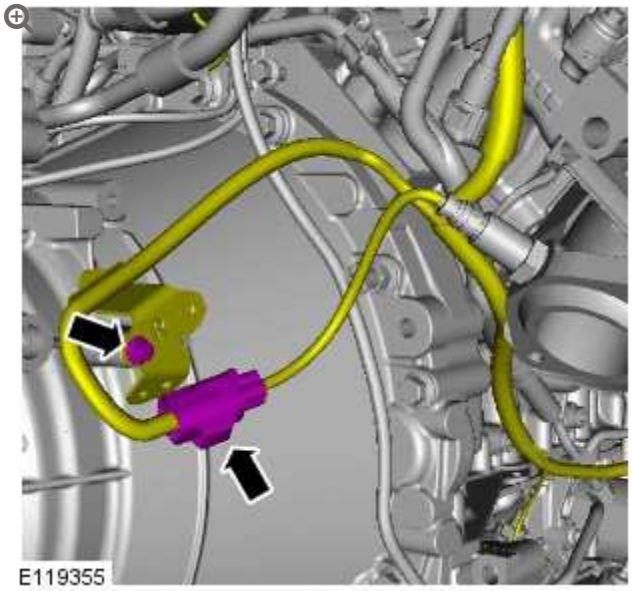

Torque: **10 Nm**

10.

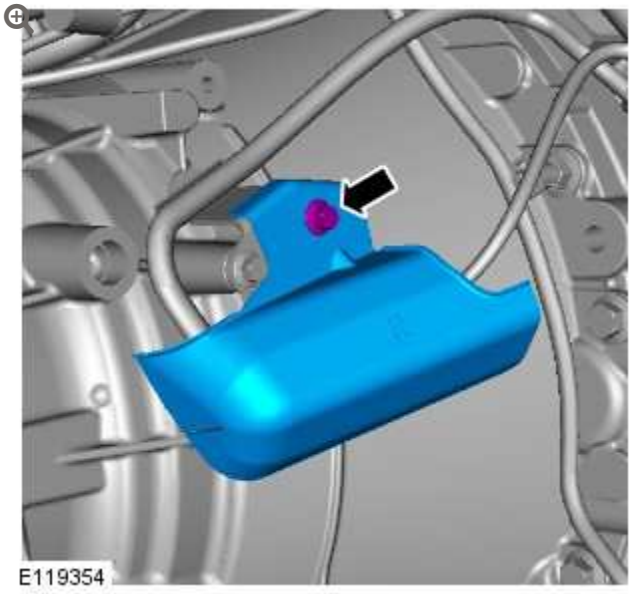

Torque: **10 Nm**

11. **NOTE:**

    Install a new gasket.

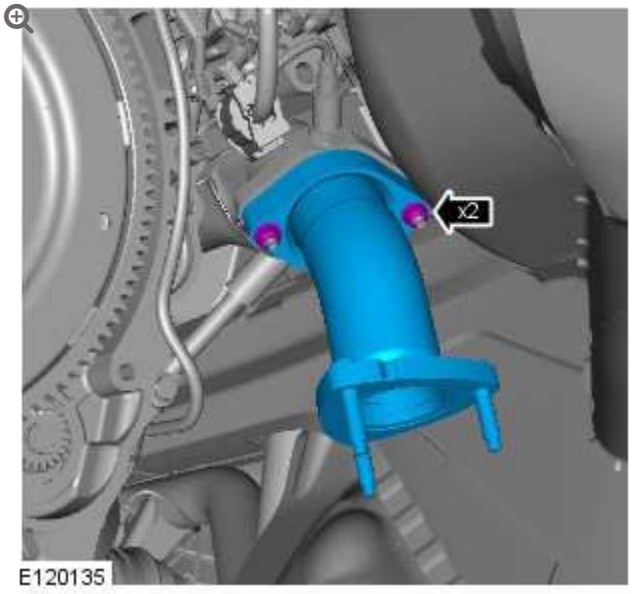

Torque: **48 Nm**

12. Refer to: Exhaust System (309-00, Removal and Installation).

13. Connect the battery ground cable.
    Refer to: Specifications (414-00, Specifications).

ENGINE – V8 S/C 5.0L PETROL

FLEXPLATE (G1224602)

REMOVAL AND INSTALLATION

12.53.13	DRIVE PLATE – AUTOMATIC – RENEW	5000 CC, AJ V8, SUPERCHARGED	4.4	USED WITHINS	+

REMOVAL

NOTE:

Removal steps in this procedure may contain installation details.

1. Disconnect the battery ground cable.
   Refer to: Specifications (414-00, Specifications).

2. **WARNING:**

   Make sure to support the vehicle with axle stands.

   Raise and support the vehicle.

3. Refer to: Transmission - 5.0L (307-01, Removal).

4.

CAUTIONS:

- Install all the bolts finger tight before final tightening.
- The bolts can only be used 3 times, mark the bolts with a center punch. If 2 punch marks are visible, discard the bolts.
- Make sure that no components fall off during removal.
- Install the bolts in the noted position.

NOTES:

- Make sure the crankshaft and flexplate mating faces are clean before installation.
- Make sure that the crankshaft is not rotated.
- Tighten the retaining bolts working diagonally.



Torque:

Stage 1: **45 Nm**

Stage 2: **90°**

INSTALLATION

1. To install, reverse the removal procedure.

ENGINE – V8 S/C 5.0L PETROL

FUEL PUMP CAMSHAFT

(G1453825)

REMOVAL AND INSTALLATION

12.65.13	TIMING CHAIN, GEARS AND TENSIONER – RENEW	5000 CC, AJ V8, SUPERCHARGED	14.4	USED WITHINS	+

REMOVAL

NOTE:

Some illustrations may show the engine removed for clarity.

1. Disconnect the battery ground cable.
   Refer to: Specifications (414-00, Specifications).

2. **WARNING:**

   Make sure to support the vehicle with axle stands.

Raise and support the vehicle.

3. Refer to: Oil Pan Extension (303-01B Engine - V8 S/C 5.0L Petrol, Removal and Installation).

4. 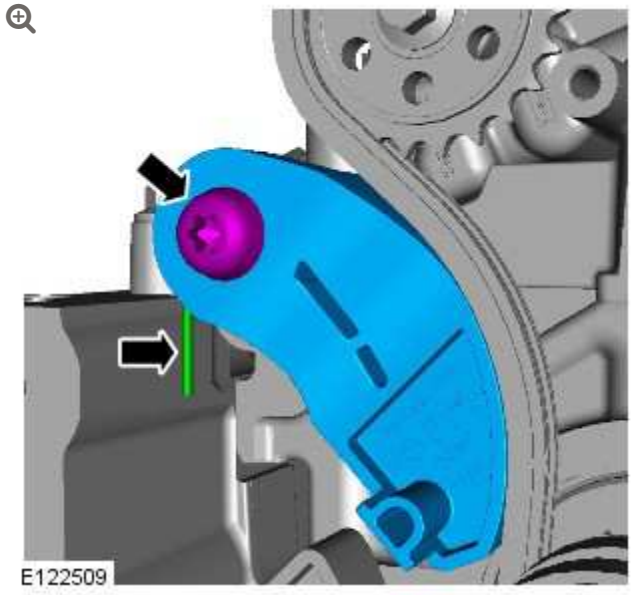

5. 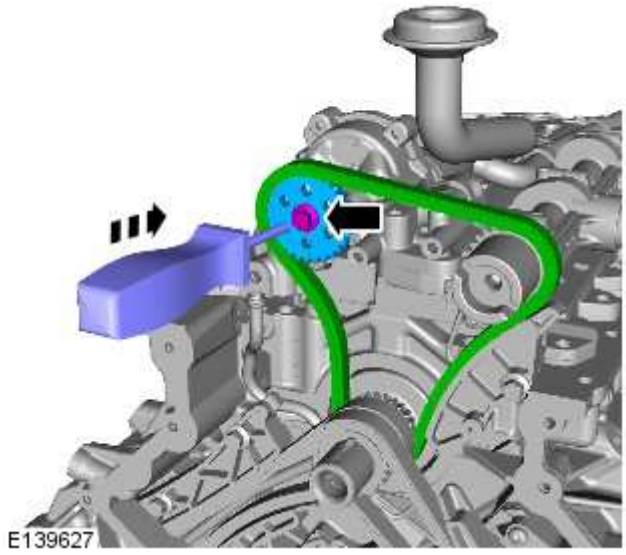

6.

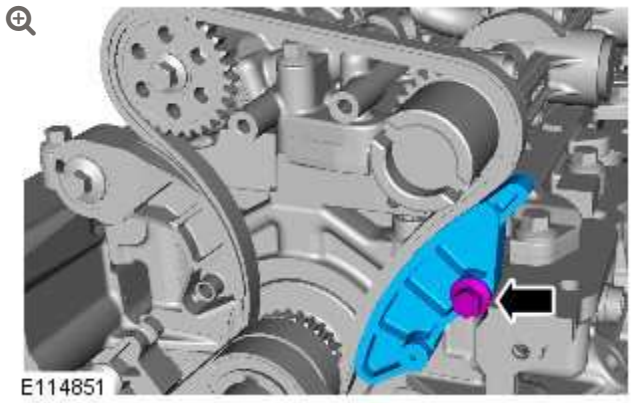

7.

CAUTION:

Take extra care when removing the component, prevent damage to the mating faces.

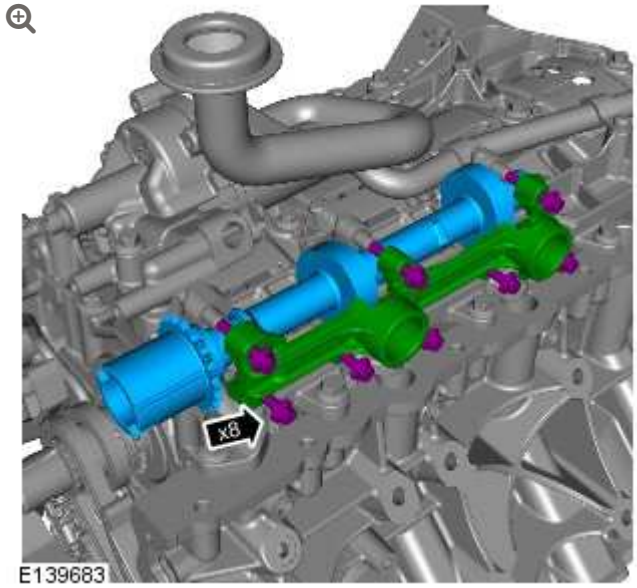

INSTALLATION

1.

CAUTION:

Make sure that the mating faces are clean and free of foreign material.

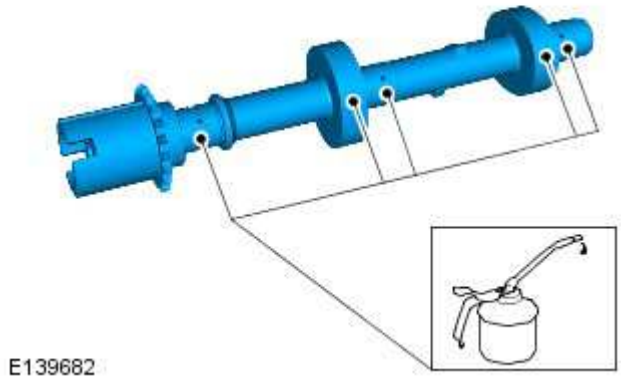

2.

CAUTION:

Take extra care not to damage the mating faces.

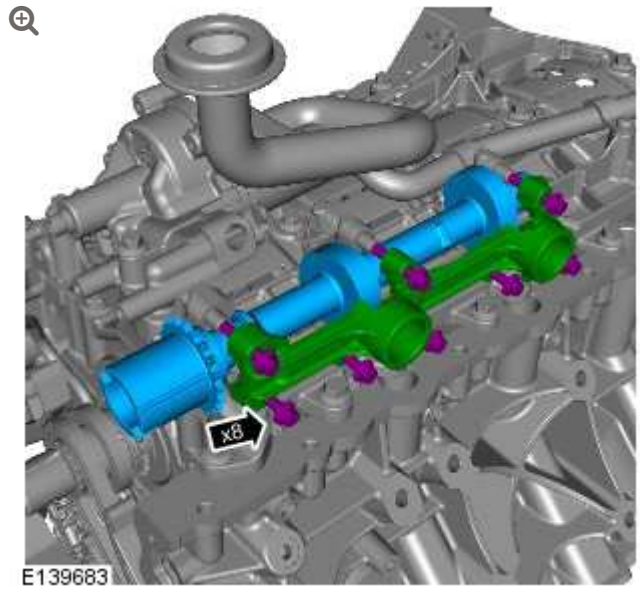

Torque: **12 Nm**

3.

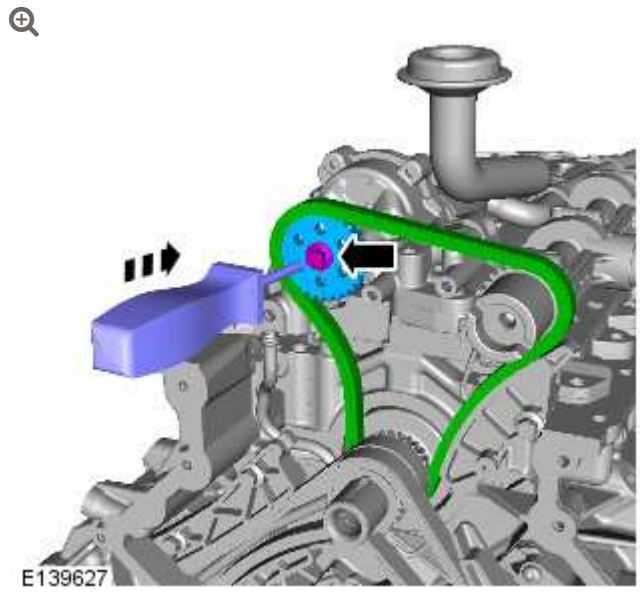

Torque: **21 Nm**

4.

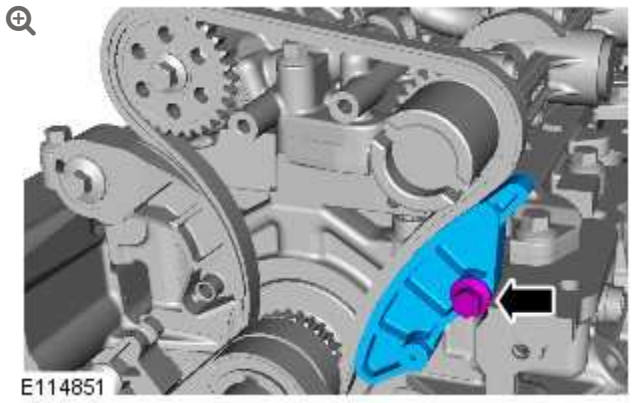

Torque: **12 Nm**

5.

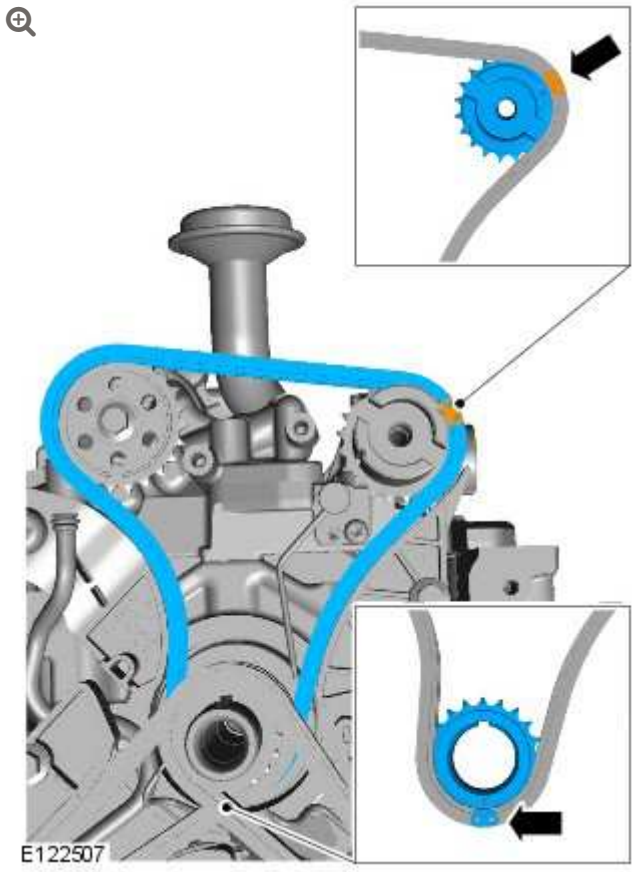

Install the lower timing chain making sure the coloured chain links align correctly with the fuel rail high-pressure fuel pumps camshaft and crankshaft sprocket markings.

6.

CAUTION:

Make sure that the tensioner spring is correctly located.

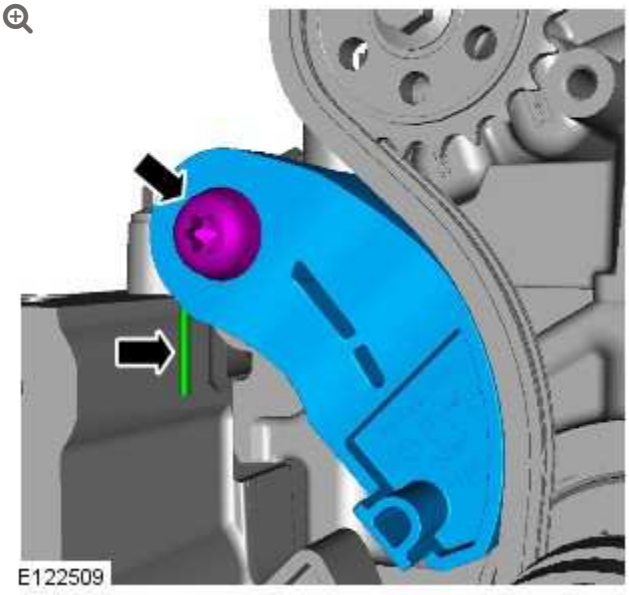

Torque: **21 Nm**

7. Refer to: Oil Pan Extension (303-01B Engine - V8 S/C 5.0L Petrol, Removal and Installation).

8. Connect the battery ground cable.
Refer to: Specifications (414-00, Specifications).

ENGINE – V8 S/C 5.0L PETROL

FUEL PUMP CAMSHAFT TIMING ADJUSTMENT (G1473679)

GENERAL PROCEDURES

19.90.17	HIGH PRESSURE FUEL TIMING CHECK AND ADJUST	5000 CC, AJ V8, SUPERCHARGED	7.2	USED WITHINS

SPECIAL TOOL(S)



303-1447

Timing Tool



JLR-303-1613

Alignment Tool, Fuel Pump Camshaft Timing

ADJUSTMENT

1. Disconnect the battery ground cable.
   Refer to: Specifications (414-01, Specifications).

2. **WARNING:**

   Do not work on or under a vehicle supported only by a jack. Always support the vehicle on safety stands.

   Raise and support the vehicle.

3. Refer to: Fuel Pump Camshaft Timing Check (303-01B Engine - V8 S/C 5.0L Petrol, General Procedures).

4. Refer to: Lower Timing Cover (303-01A Engine - V8 5.0L Petrol, Removal and Installation).
   Refer to: Lower Timing Cover (303-01B Engine - V8 S/C 5.0L Petrol, Removal and Installation).

5.

CAUTIONS:

- Make sure that the area around the component is clean and free of foreign material.
- Inspect the 3 timing chain oil nozzles for signs of damage, install as necessary.

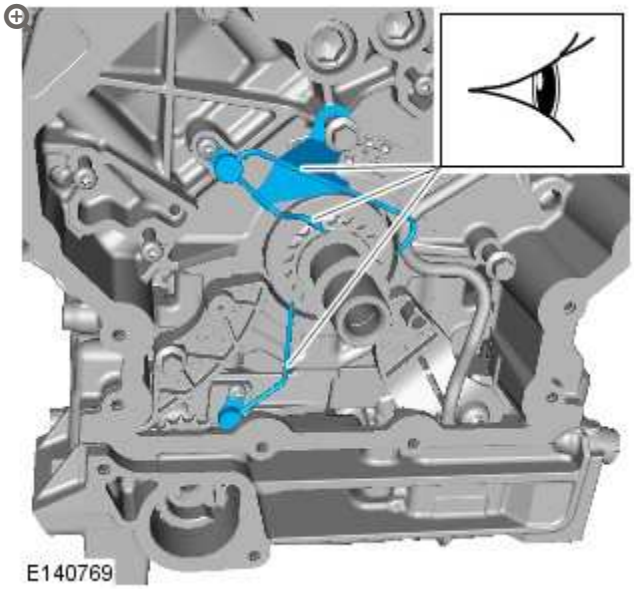

6.

NOTE:

Using a suitable tie strap, position the tensioner to one side.

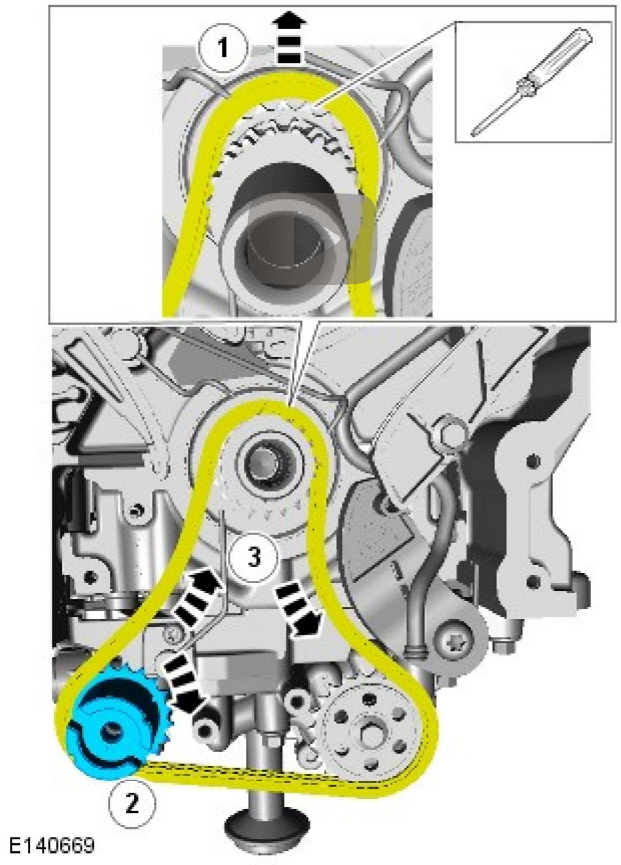

Special Tool(s): JLR-303-1613

Torque: **12 Nm**

7. Refer to: Lower Timing Cover (303-01A Engine - V8 5.0L Petrol, Removal and Installation).
   Refer to: Lower Timing Cover (303-01B Engine - V8 S/C 5.0L Petrol, Removal and Installation).

8.

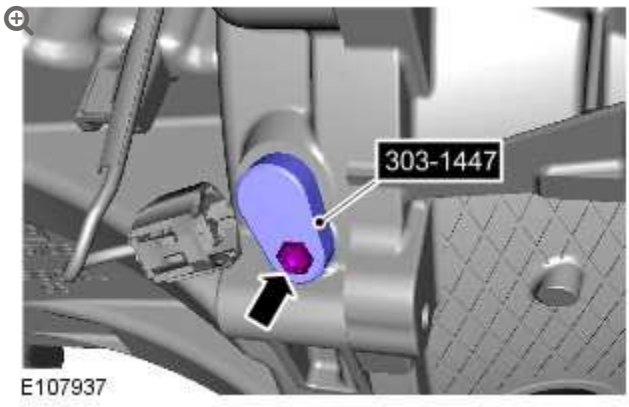

Remove the Special Tool(s): 303-1447

9.

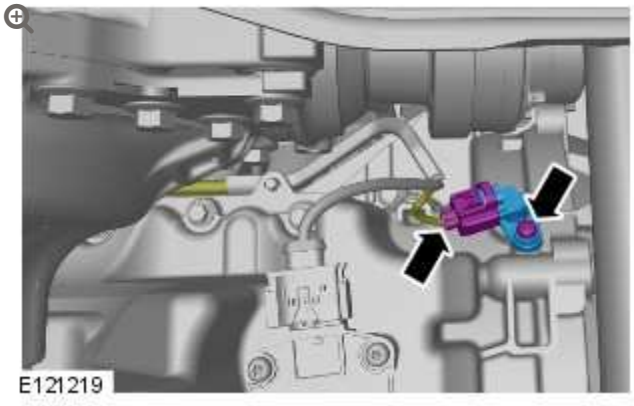

Torque: **10 Nm**

10.

NOTE:

Install a new sealing washer.

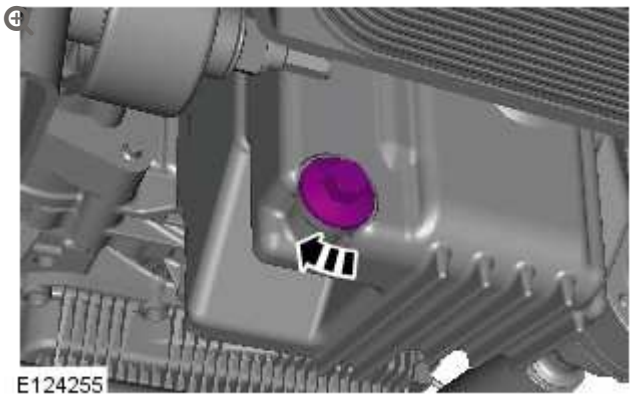

Torque: **24 Nm**

11. Connect the battery ground cable.
    Refer to: Specifications (414-01, Specifications).

12. **CAUTION:**

    Make sure that the vehicle is left for 5 minutes from filling with oil and that the engine oil level is reading at least minimum (by following Steps 15-22), before starting the engine.

    - Fill the engine with oil - for filling values on vehicles without supercharger:
      Refer to: Specifications (303-01A Engine - V8 5.0L Petrol, Specifications).
    - Fill the engine with oil - for filling values on vehicles with supercharger:
      Refer to: Specifications (303-01B Engine - V8 S/C 5.0L Petrol, Specifications).
    - Clean any residual engine oil from the oil filler cap area.

13.

CAUTION:

Make sure that the vehicle has been left for 5 minutes from filling with oil.

Follow the Steps 15-22 before starting the engine.

14.
- Start the engine and allow to run for 10 minutes, stop the engine.
- Check for leaks.

15.
CAUTIONS:

- Make sure that the selector lever and the gearshift mechanism are in the park (P) position.
- Make sure that the hood is open.

- Turn the ignition on.

16.

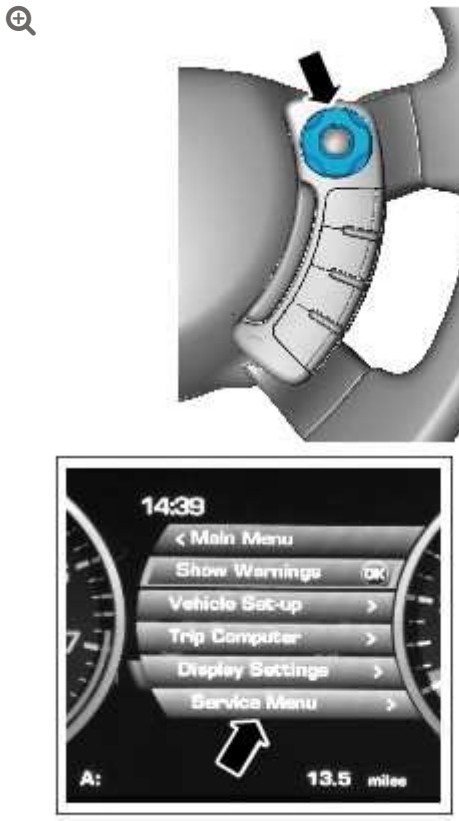

E122817

- Press the right-hand directional button to access the instrument cluster menu.

17.

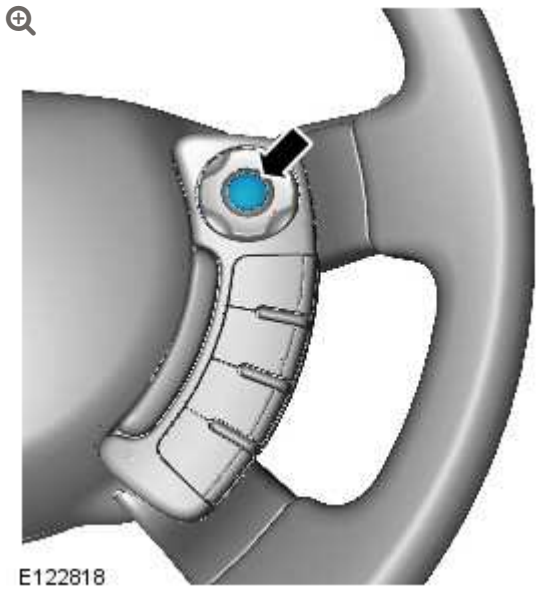

E122818

- Press the right-hand OK button.

18.

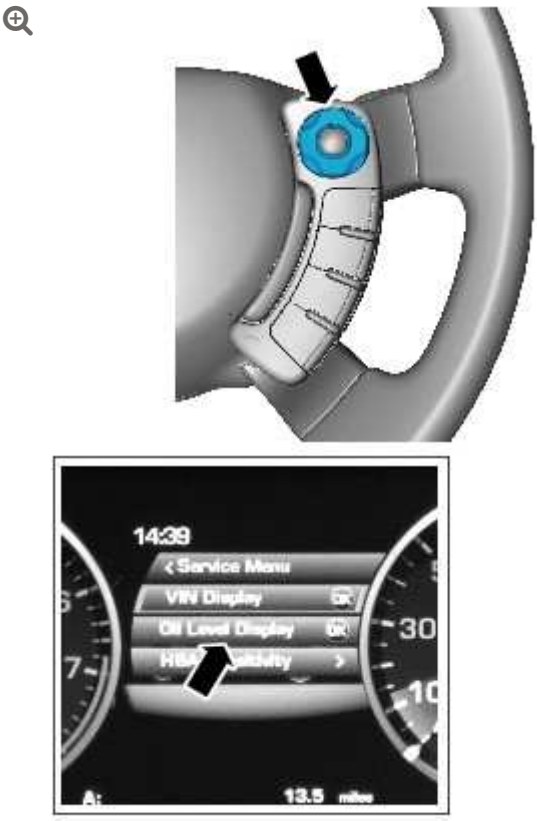

E122819

- Press the right-hand directional button to access the Oil Level Display.

19.



E122820

- Press the right-hand OK button and follow the instructions.

20.

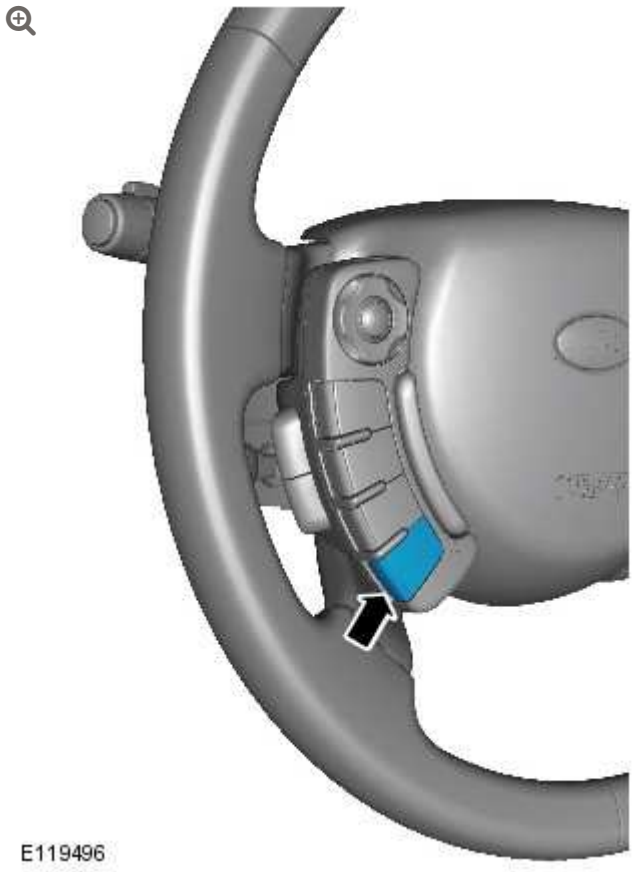

- Press the cruise control cancel button twice within 2 seconds.

21.



E122821

- The message center display will revert to the normal display in the trip computer.
- Press the right-hand OK button and follow the instructions.
- Check that the oil level display shows an oil level reading.
- Only after having started and run the engine for 10 minutes (as indicated in Step 14), switch off the engine, then stabilizing for 10 minutes, take a reading from the oil level display and, if necessary top up with engine oil.

22.

NOTE:

If instructed to follow Steps 15-22 in a previous step, return to Step 14 and continue the procedure.

Turn the ignition off.

23. Allow 10 minutes for the engine oil level to stabilize if there has been additional oil top up.

24. **NOTE:**

> The following steps are to update the average oil level value.

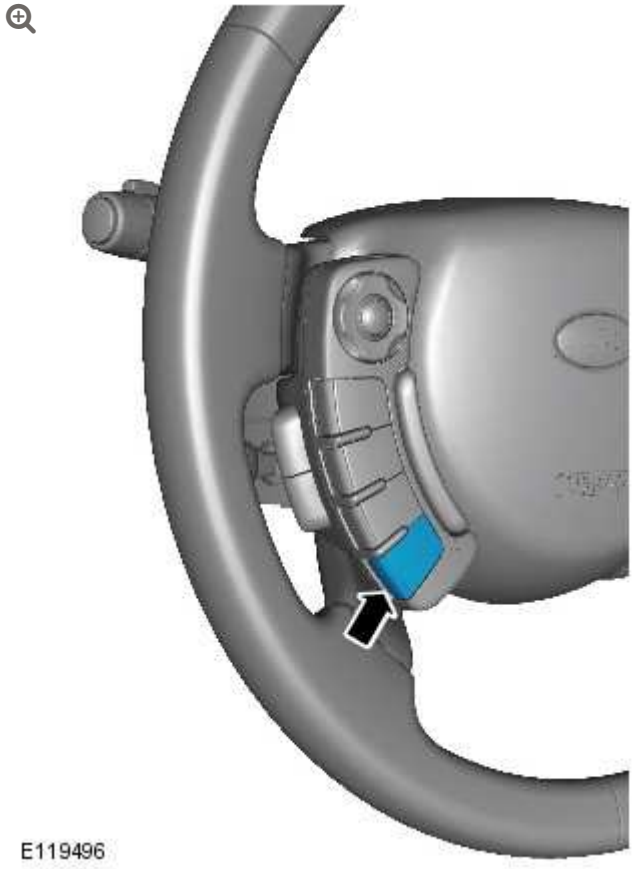

- Turn the ignition on.
- Press and hold the cruise control cancel button for more than 2 seconds.

25. - The message center display will revert to the normal display in the trip computer.

26. Turn the ignition off.

27. Turn the ignition on.

28. 

E122817

    - Press the right-hand directional button to access the instrument cluster menu.

29.

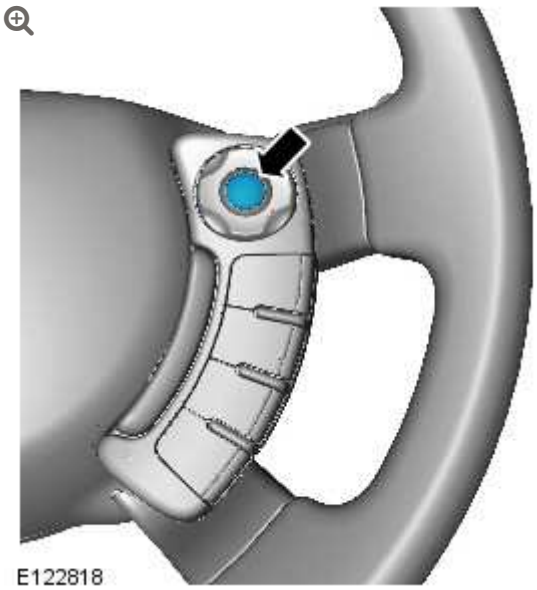
E122818

- Press the right-hand OK button.

30.

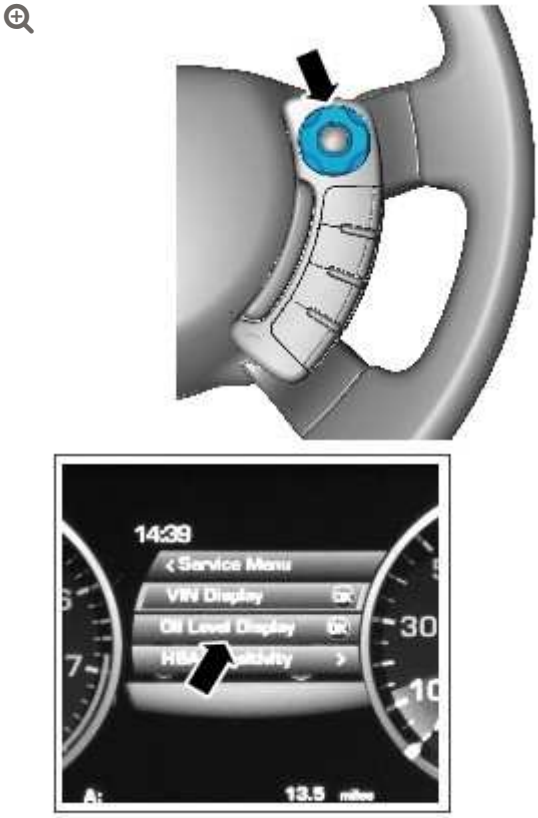

E122819

- Press the right-hand directional button to access the Oil Level Display.

31.



E122821

- Press the right-hand OK button and follow the instructions.
- Make sure that the average oil level value has now been updated.

32. Refer to: Engine Undershield (501-02 Front End Body Panels, Removal and Installation).

33. Refer to: Radiator Splash Shield (501-02 Front End Body Panels, Removal and Installation).

ENGINE – V8 S/C 5.0L PETROL

FUEL PUMP CAMSHAFT TIMING CHECK (G1473678)

GENERAL PROCEDURES

19.90.16	HIGH PRESSURE FUEL TIMING CHECK	5000 CC, AJ V8	1.2	USED WITHINS

SPECIAL TOOL(S)



303-1447

Timing Tool



JLR-303-1621

Alignment Tool, Fuel Pump Camshaft Timing

CHECK

1. Disconnect the battery ground cable.
   Refer to: Specifications (414-00 Battery and Charging System - General Information, Specifications).

2. **WARNING:**

   Do not work on or under a vehicle supported only by a jack. Always support the vehicle on safety stands.

   Raise and support the vehicle.

3. Refer to: Engine Undershield (501-02 Front End Body Panels, Removal and Installation).

4. Refer to: Radiator Splash Shield (501-02 Front End Body Panels, Removal and Installation).

5.

CAUTION:

Be prepared to collect escaping oil.

NOTES:

- Discard the sealing washer.
- Collect the engine oil in a clean container.

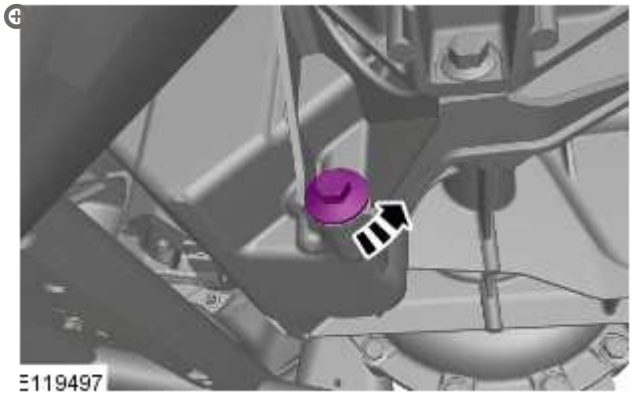

6.

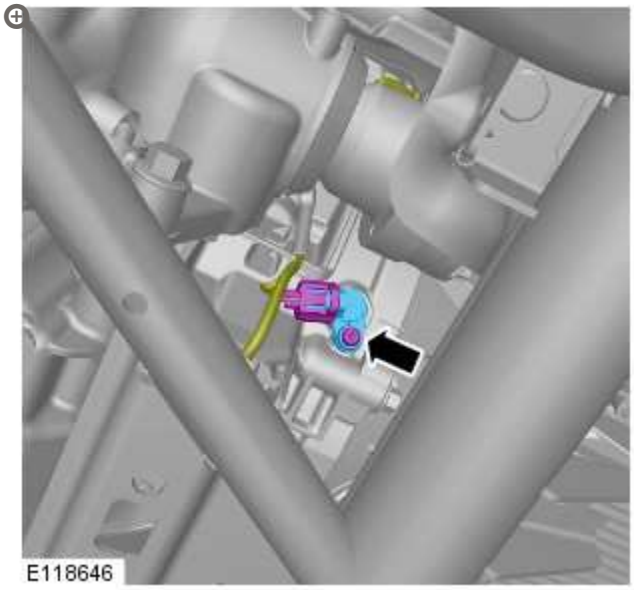

7.

CAUTIONS:

- Only rotate the crankshaft clockwise.
- Make sure that the crankshaft is fully locked.

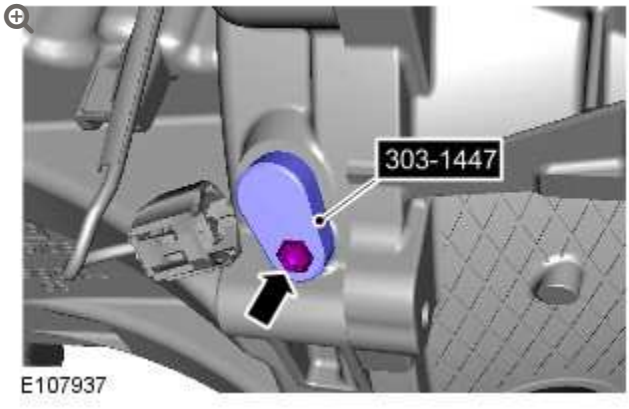

Install the Special Tool(s): 303-1447

8.

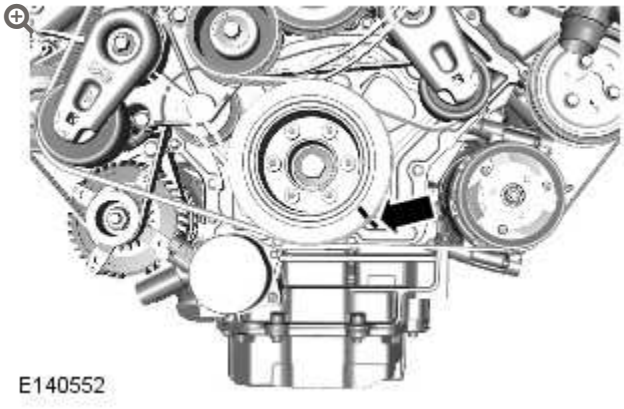

Using a suitable marker, mark the position of the crankshaft pulley as illustrated.

9.

NOTE:

Discard the seal.

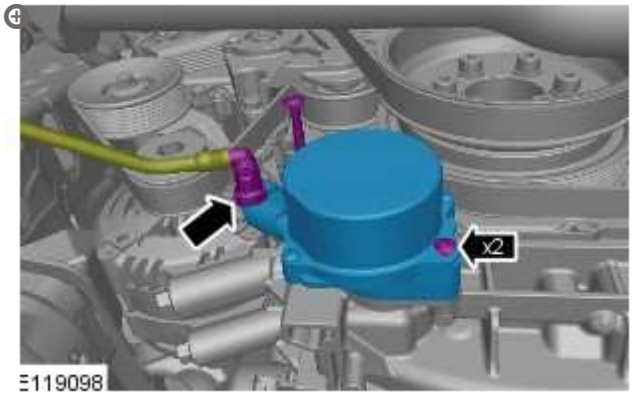

10.

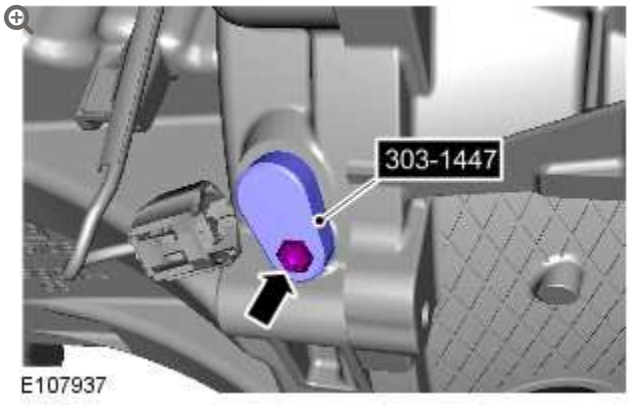

Remove the Special Tool(s): 303-1447

11.

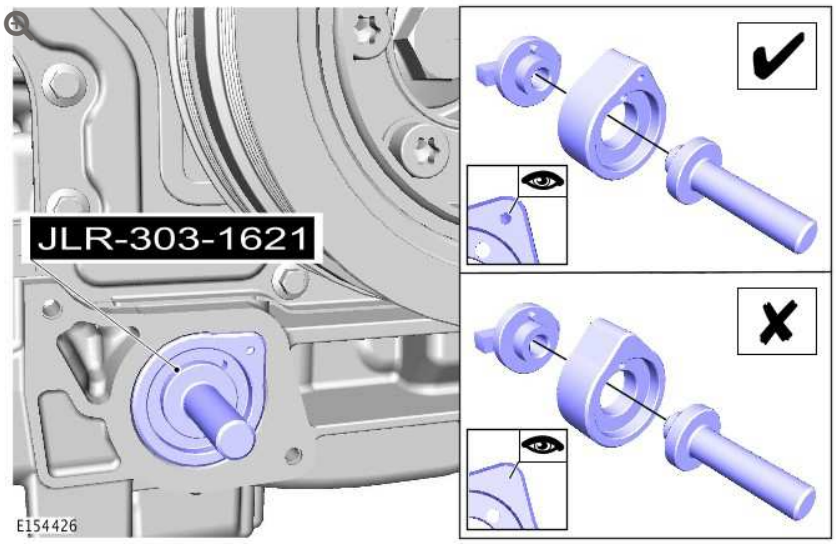

If required, carefully adjust the crankshaft position to allow correct installation of the special tool.

Install the Special Tool(s): JLR-303-1621

12.

CAUTION:

Do not use excessive force when adjusting the crankshaft position.

NOTE:

If the crankshaft timing tool cannot be installed, adjustment of the fuel pump camshaft timing will be required.

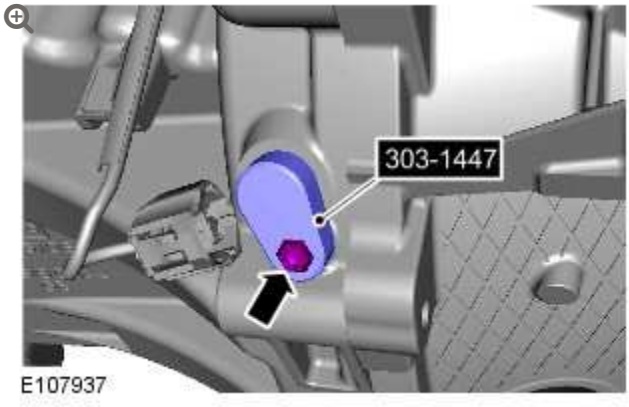

1. If required, carefully adjust the crankshaft position to allow correct installation of the special tool.
   Install the Special Tool(s): 303-1447
2. If the crankshaft timing tool cannot be installed, adjustment of the fuel pump camshaft timing will be required.
   Refer to: Fuel Pump Camshaft Timing Adjustment (303-01A Engine - V8 5.0L Petrol, General Procedures).

13.

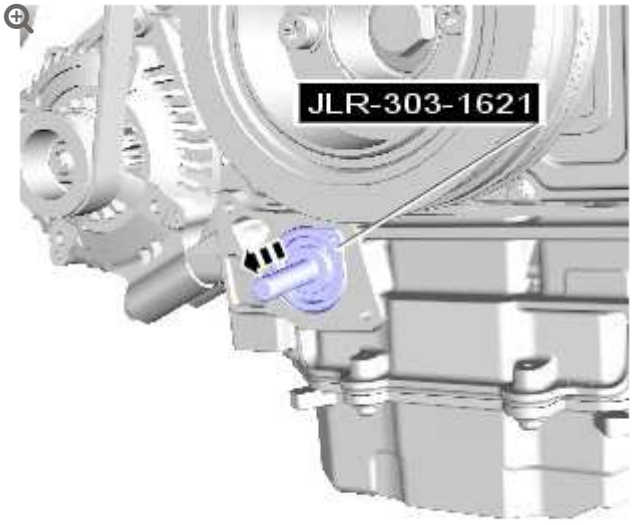

E154428

Remove the Special Tool(s): JLR-303-1621

14.

NOTE:

Install a new seal.

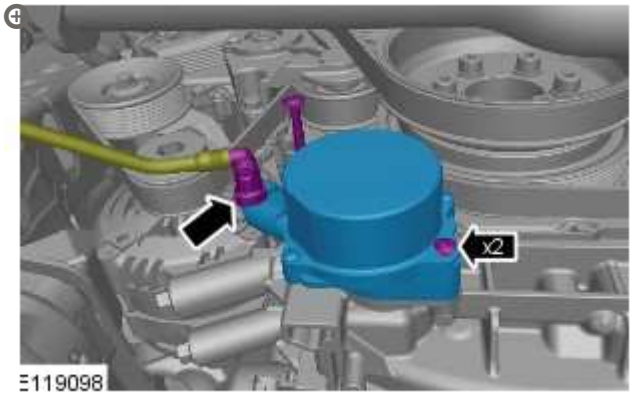

E119098

Torque: **12 Nm**

15.

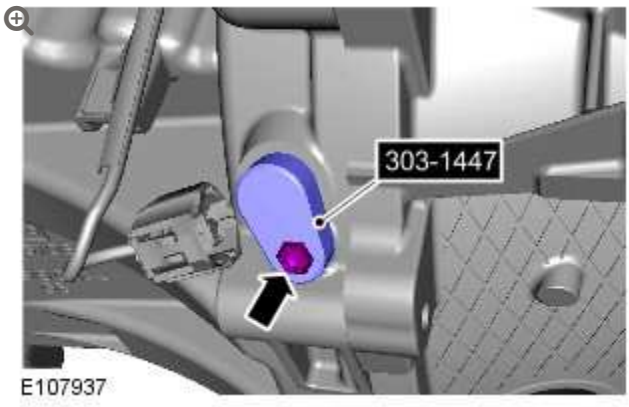

Remove the Special Tool(s): 303-1447

16.

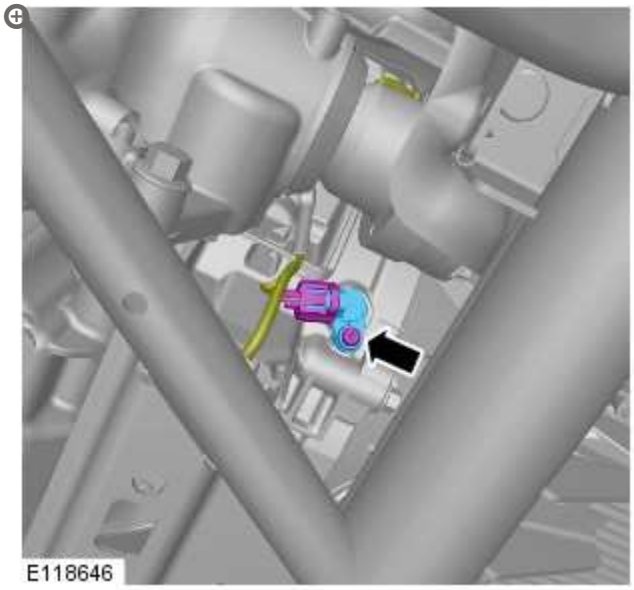

Torque: **10 Nm**

17.

NOTE:

Install a new sealing washer.

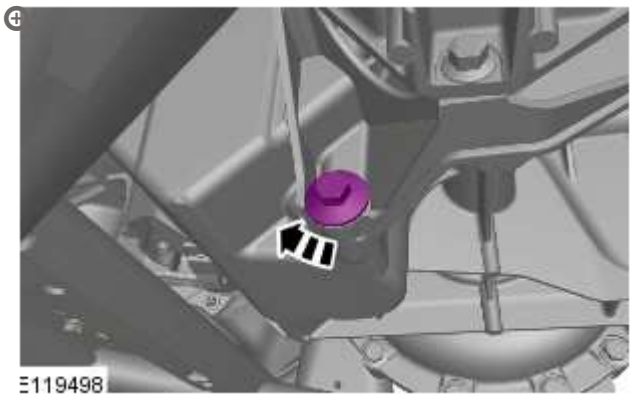

Torque: **24 Nm**

18. Connect the battery ground cable.
Refer to: Specifications (414-00 Battery and Charging System - General Information, Specifications).

19. **CAUTION:**

> Make sure that the vehicle is left for 5 minutes from filling with oil and that the engine oil level is reading at least minimum (by following Steps 22-29), before starting the engine.

- Fill the engine with oil - for filling values on vehicles without supercharger:
Refer to: Specifications (303-01A Engine - V8 5.0L Petrol, Specifications).
- Fill the engine with oil - for filling values on vehicles with supercharger:
Refer to: Specifications (303-01B Engine - V8 S/C 5.0L Petrol, Specifications).
- Clean any residual engine oil from the oil filler cap area.

20.

CAUTION:

Make sure that the vehicle has been left for 5 minutes from filling with oil.

Follow the Steps 22-29 before starting the engine.

21.
- Start the engine and allow to run for 10 minutes, stop the engine.
- Check for leaks.

22. **CAUTIONS:**

- Make sure that the selector lever and the gearshift mechanism are in the park (P) position.
- Make sure that the hood is open.

- Turn the ignition on.

23.



E122817

- Press the right-hand directional button to access the instrument cluster menu.

24.

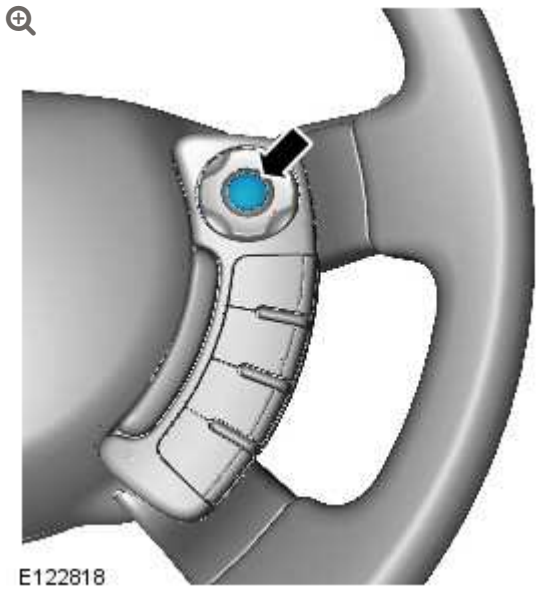

E122818

- Press the right-hand OK button.

25.

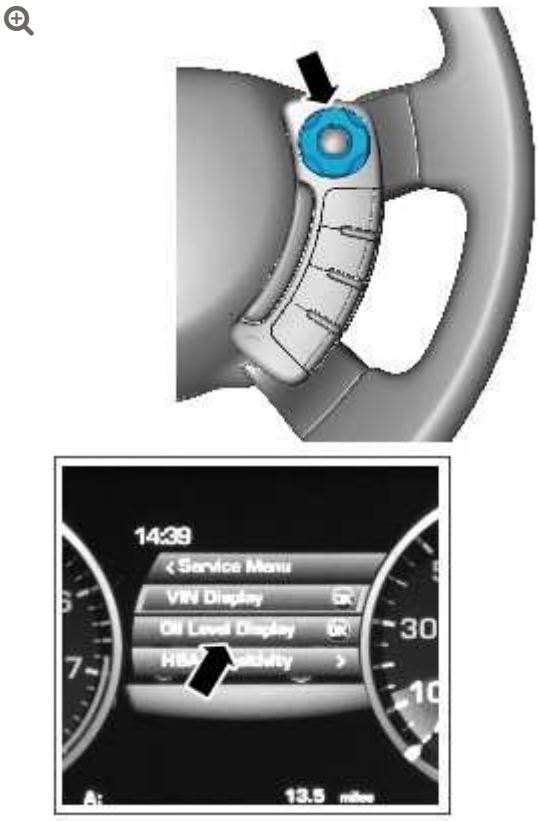

E122819

- Press the right-hand directional button to access the Oil Level Display.

26.



E122820

- Press the right-hand OK button and follow the instructions.

27.

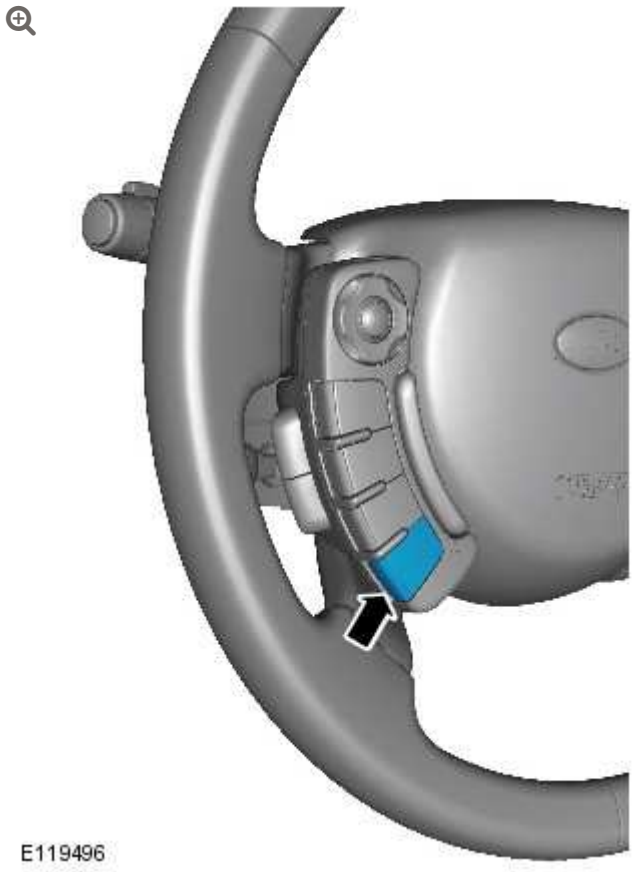

- Press the cruise control cancel button twice within 2 seconds.

28.



E122821

- The message center display will revert to the normal display in the trip computer.
- Press the right-hand OK button and follow the instructions.
- Check that the oil level display shows an oil level reading.
- Only after having started and run the engine for 10 minutes (as indicated in Step 21), switch off the engine, then stabilizing for 10 minutes, take a reading from the oil level display and, if necessary top up with engine oil.

29.

NOTE:

If instructed to follow Steps 22-29 in a previous step, return to Step 21 and continue the procedure.

Turn the ignition off.

30. Allow 10 minutes for the engine oil level to stabilize if there has been additional oil top up.

31. **NOTE:**

> The following steps are to update the average oil level value.

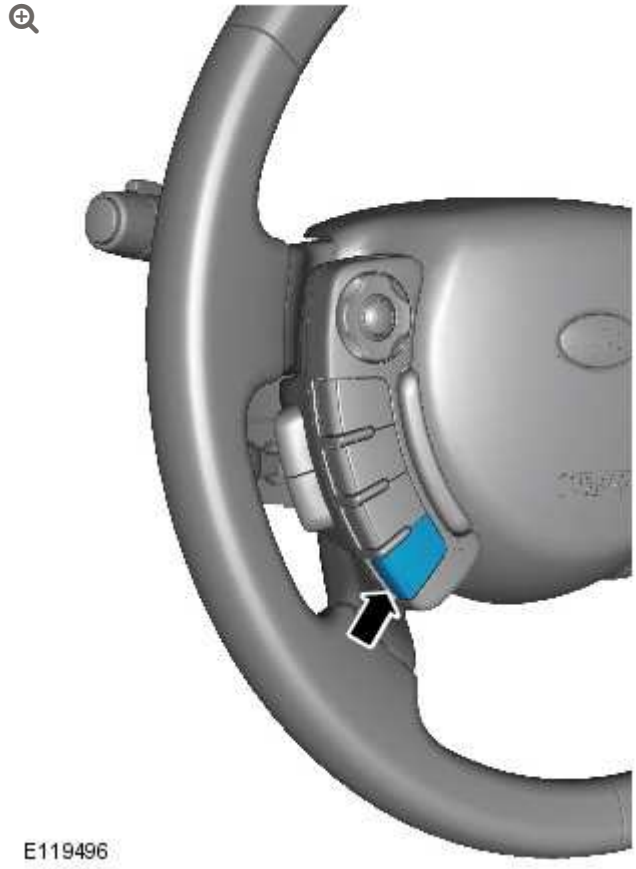

- Turn the ignition on.
- Press and hold the cruise control cancel button for more than 2 seconds.

32. - The message center display will revert to the normal display in the trip computer.

33. Turn the ignition off.

34. Turn the ignition on.

35. 

E122817

    - Press the right-hand directional button to access the instrument cluster menu.

36.

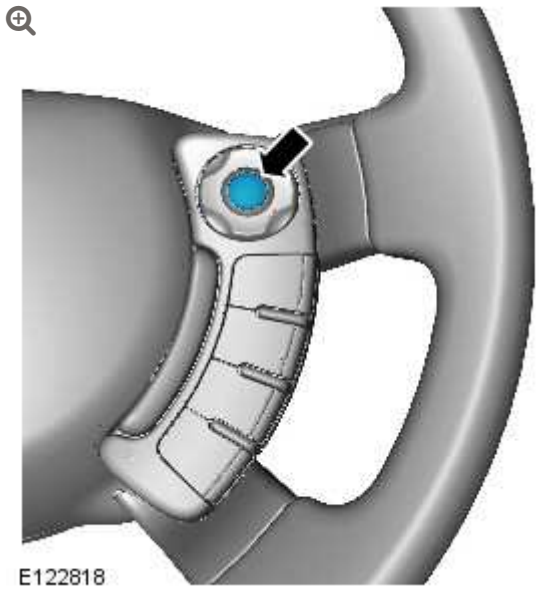

E122818

- Press the right-hand OK button.

37.

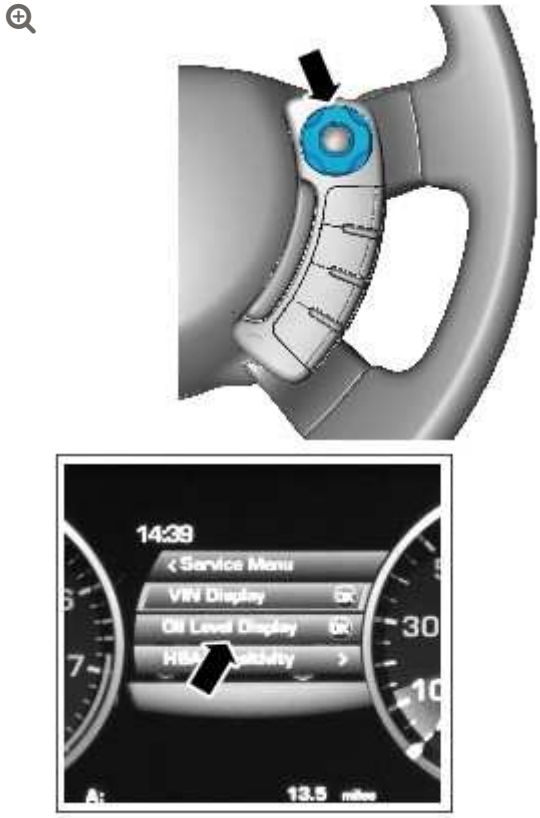

E122819

- Press the right-hand directional button to access the Oil Level Display.

38.



E122821

- Press the right-hand OK button and follow the instructions.
- Make sure that the average oil level value has now been updated.

39. Refer to: Engine Undershield (501-02 Front End Body Panels, Removal and Installation).

40. Refer to: Radiator Splash Shield (501-02 Front End Body Panels, Removal and Installation).

ENGINE – V8 S/C 5.0L PETROL

LOWER TIMING COVER

(G1473680)

REMOVAL AND INSTALLATION

12.65.43	COVER – TIMING GEAR – LOWER – RENEW	5000 CC, AJ V8, SUPERCHARGED	6.6	USED WITHINS	+

SPECIAL TOOL(S)



303–1433

Lower Timing Cover Alignment tool

REMOVAL

1. Disconnect the battery ground cable.
   Refer to: Specifications (414-01, Specifications).

2. **WARNING:**

   Make sure to support the vehicle with axle stands.

   Raise and support the vehicle.

3. Refer to: Crankshaft Pulley (303-01C, Removal and Installation).

4. Refer to: Brake Vacuum Pump - V8 5.0L Petrol/V8 S/C 5.0L Petrol (206-07 Power Brake Actuation, Removal and Installation).

5. 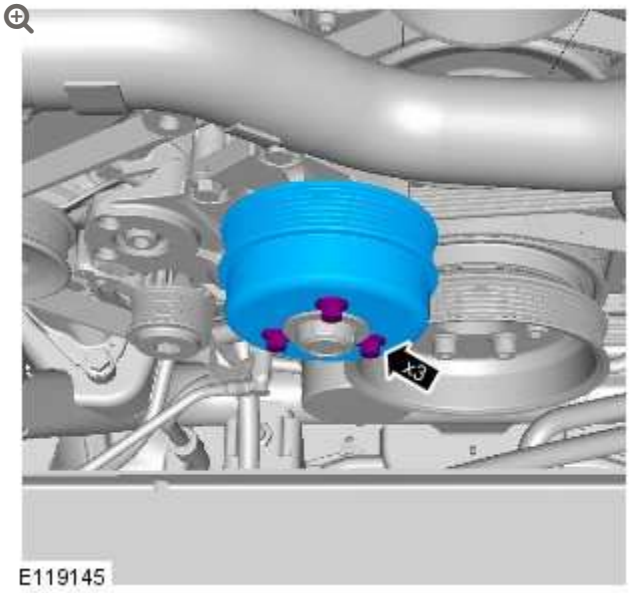

6.



7.

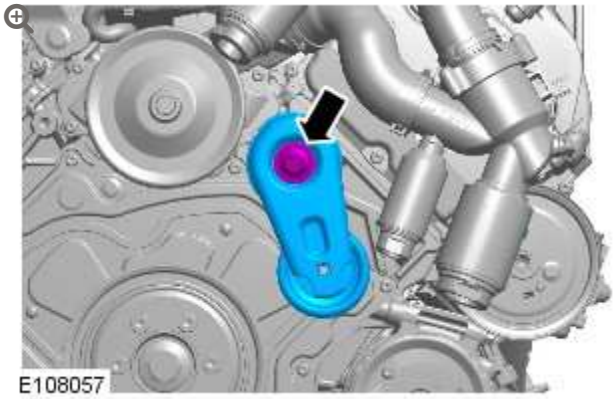

8.

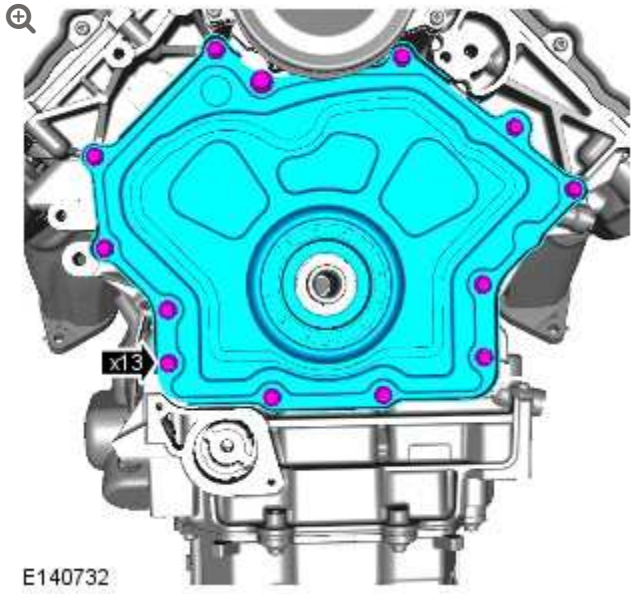

INSTALLATION

1.

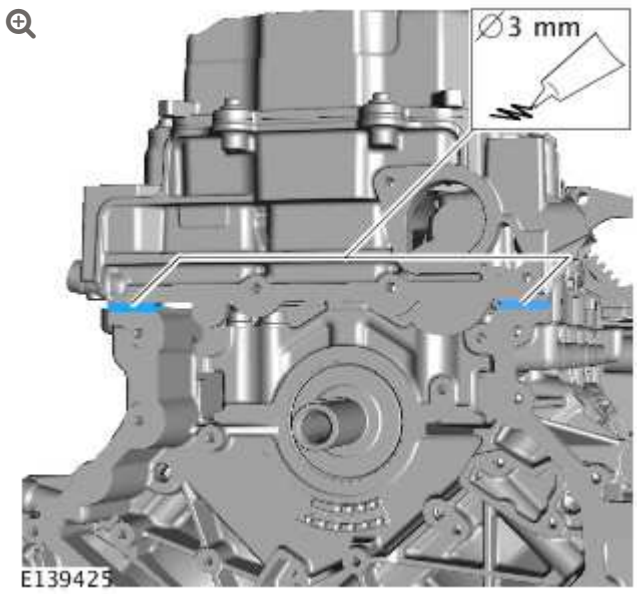

Apply RTV sealant WSE-M4G323-A6 (Loctite 5901G) to the areas shown, and tighten the bolts within 7 minutes.

2.

CAUTION:

Make sure that the mating faces are clean and free of foreign material.

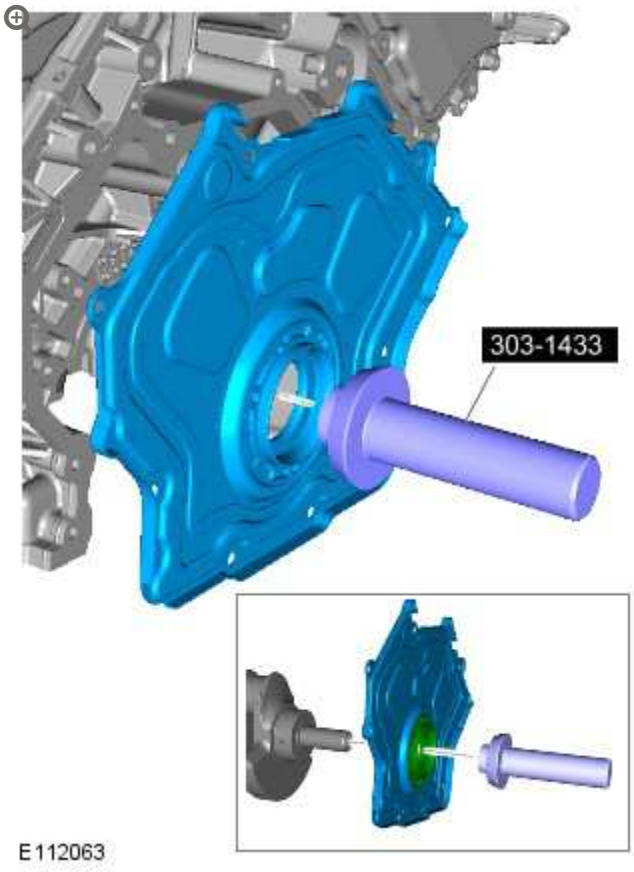

Install the bolts, but do not tighten fully at this stage.
Special Tool(s): 303-1433

3.

NOTE:

Tighten the bolts in the indicated sequence.

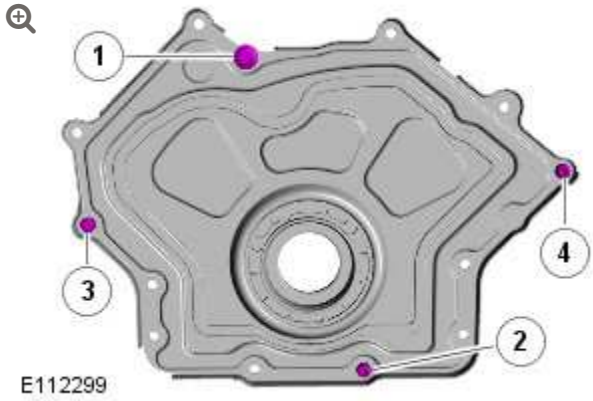

Torque:

M6 **12 Nm**

M8 **20 Nm**

4.

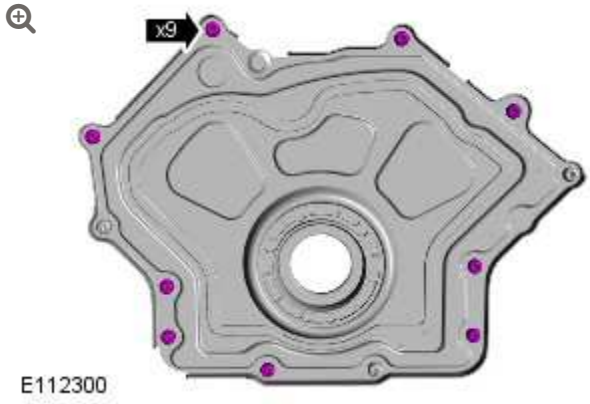

Torque: **12 Nm**

5.



Torque: **40 Nm**

6.



Torque: **25 Nm**

7.

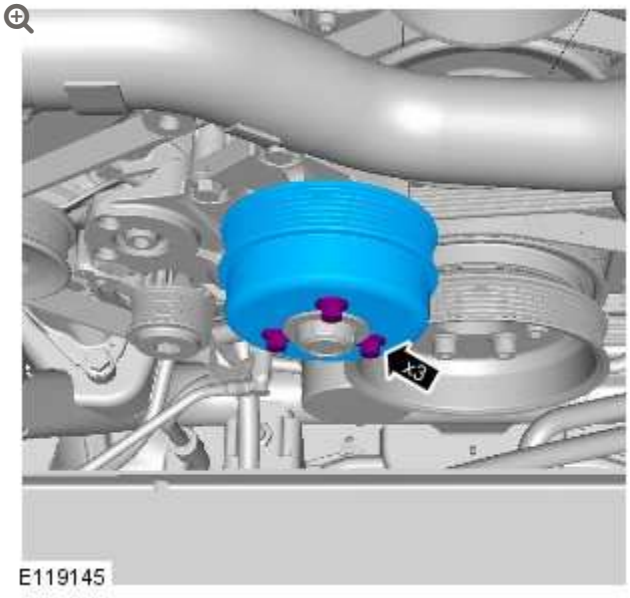

Torque: **25 Nm**

8. Refer to: Brake Vacuum Pump - V8 5.0L Petrol/V8 S/C 5.0L Petrol (206-07 Power Brake Actuation, Removal and Installation).

9. Refer to: Crankshaft Pulley (303-01C, Removal and Installation).

10. Connect the battery ground cable.
Refer to: Specifications (414-01, Specifications).

11. **CAUTION:**

> Make sure that the vehicle is left for 5 minutes from filling with oil and that the engine oil level is reading at least minimum (by following Steps 14-21), before starting the engine.

- Fill the engine with oil - for filling values on vehicles without supercharger:
  Refer to: Specifications (303-01A Engine - V8 5.0L Petrol, Specifications).
- Fill the engine with oil - for filling values on vehicles with supercharger:
  Refer to: Specifications (303-01B Engine - V8 S/C 5.0L Petrol, Specifications).
- Clean any residual engine oil from the oil filler cap area.

12. **CAUTION:**

> Make sure that the vehicle has been left for 5 minutes from filling with oil.

Follow the Steps 14-21 before starting the engine.

13. - Start the engine and allow to run for 10 minutes, stop the engine.
- Check for leaks.

14.

CAUTIONS:

- Make sure that the selector lever and the gearshift mechanism are in the park (P) position.
- Make sure that the hood is open.

- Turn the ignition on.

15.

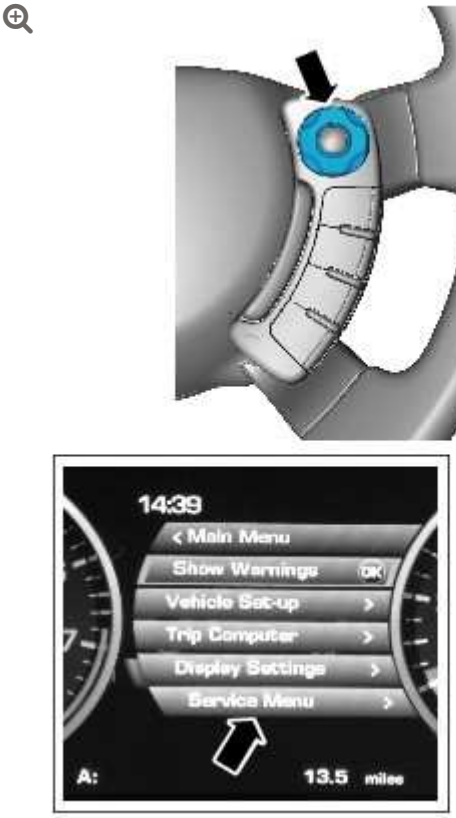

E122817

- Press the right-hand directional button to access the instrument cluster menu.

16.

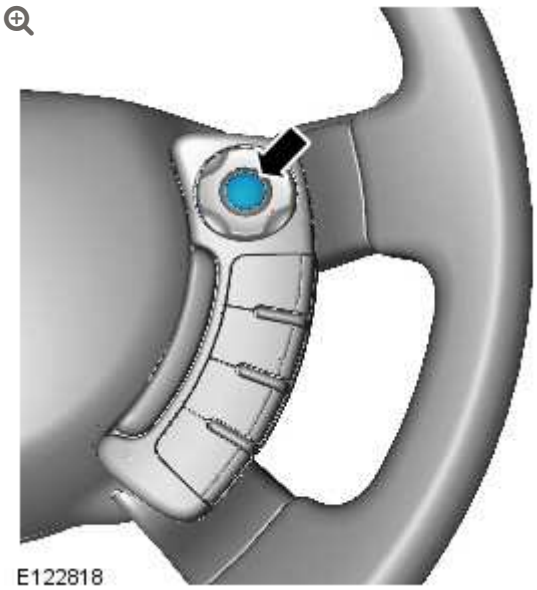
E122818

- Press the right-hand OK button.

17.

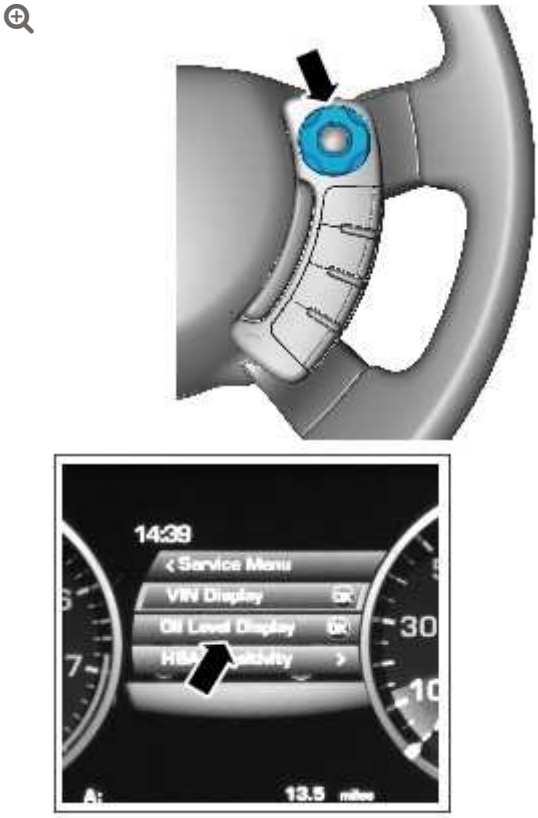

E122819

- Press the right-hand directional button to access the Oil Level Display.

18.



E122820

- Press the right-hand OK button and follow the instructions.

19.

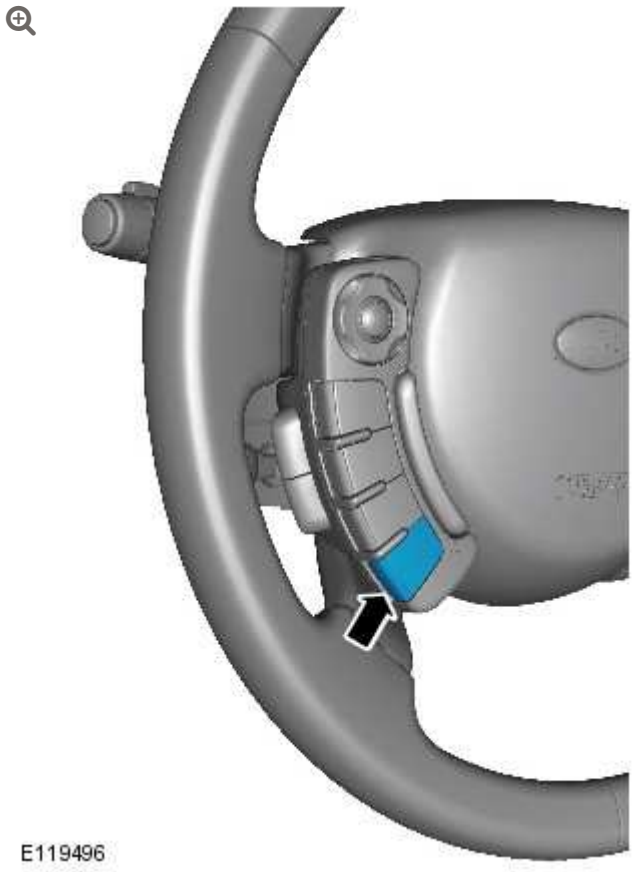

- Press the cruise control cancel button twice within 2 seconds.

20.



E122821

- The message center display will revert to the normal display in the trip computer.
- Press the right-hand OK button and follow the instructions.
- Check that the oil level display shows an oil level reading.
- Only after having started and run the engine for 10 minutes (as indicated in Step 13), switch off the engine, then stabilizing for 10 minutes, take a reading from the oil level display and, if necessary top up with engine oil.

21.

NOTE:

If instructed to follow Steps 14-21 in a previous step, return to Step 13 and continue the procedure.

Turn the ignition off.

22. Allow 10 minutes for the engine oil level to stabilize if there has been additional oil top up.

23. **NOTE:**

> The following steps are to update the average oil level value.

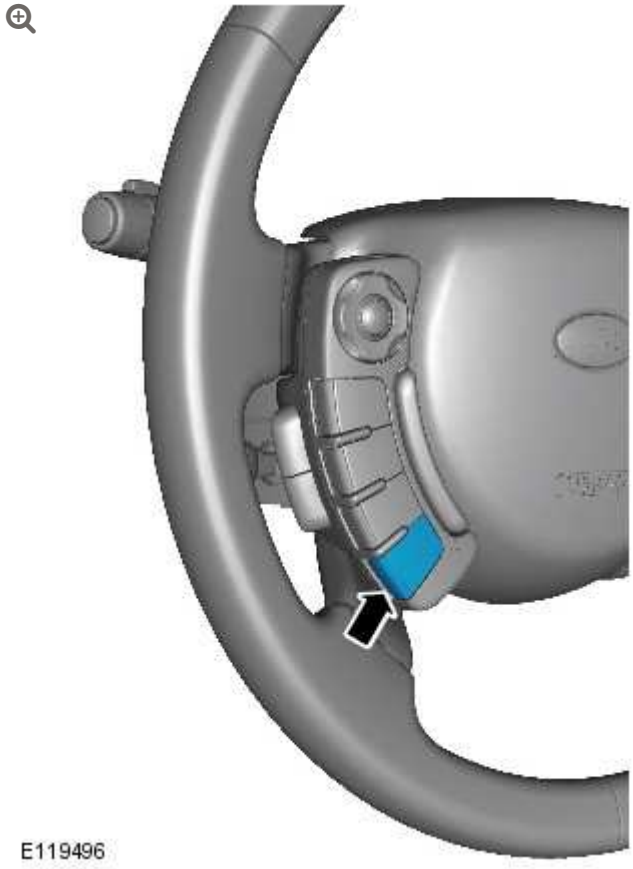

- Turn the ignition on.
- Press and hold the cruise control cancel button for more than 2 seconds.

24. - The message center display will revert to the normal display in the trip computer.

25. Turn the ignition off.

26. Turn the ignition on.

27. 

E122817

    - Press the right-hand directional button to access the instrument cluster menu.

28.

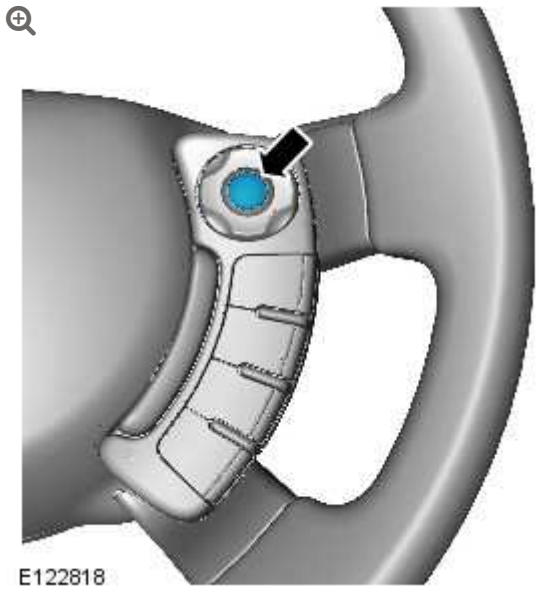
E122818

- Press the right-hand OK button.

29.

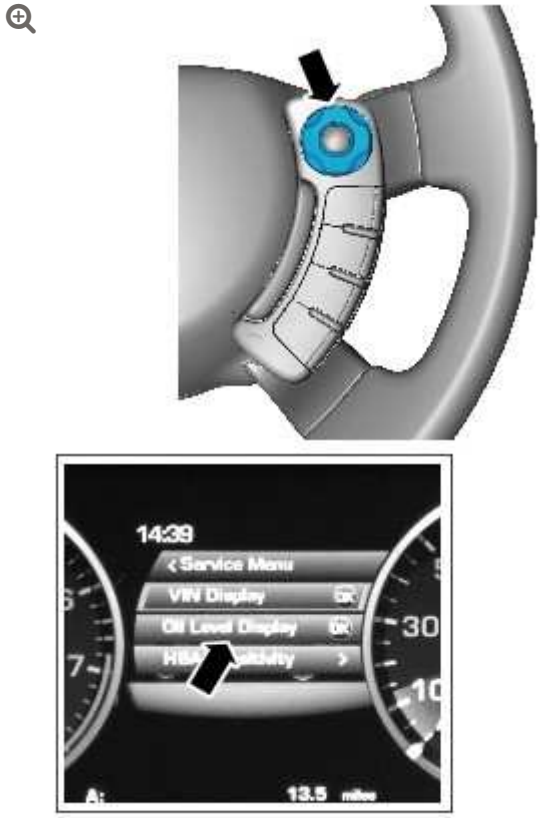

E122819

- Press the right-hand directional button to access the Oil Level Display.

30.



E122821

- Press the right-hand OK button and follow the instructions.
- Make sure that the average oil level value has now been updated.

31. Refer to: Engine Undershield (501-02 Front End Body Panels, Removal and Installation).

32. Refer to: Radiator Splash Shield (501-02 Front End Body Panels, Removal and Installation).

ENGINE – V8 S/C 5.0L PETROL

OIL COOLER (G1224603)

REMOVAL AND INSTALLATION

12.60.68	COOLER – OIL – RENEW	5000 CC, AJ V8, SUPERCHARGED	4.4	USED WITHINS	+

REMOVAL

NOTES:

- Removal steps in this procedure may contain installation details.
- Some variation in the illustrations may occur, but the essential information is always correct.

1. Disconnect the battery ground cable.
   Refer to: Specifications (414-00, Specifications).

2. **WARNING:**

   Make sure to support the vehicle with axle stands.

   Raise and support the vehicle.

3. Refer to: Engine Oil Draining and Filling (303-01, General Procedures).

4. Refer to: Supercharger (303-12, Removal and Installation).

5. 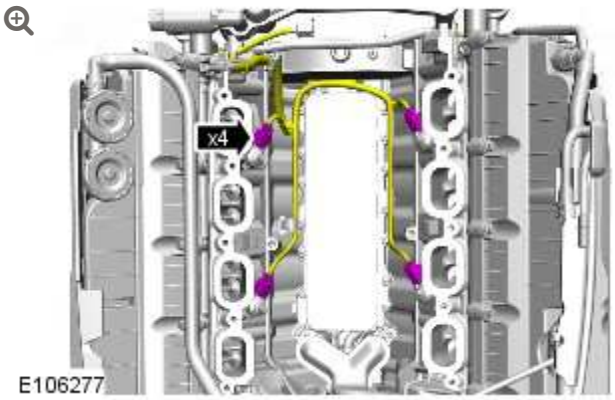

6. 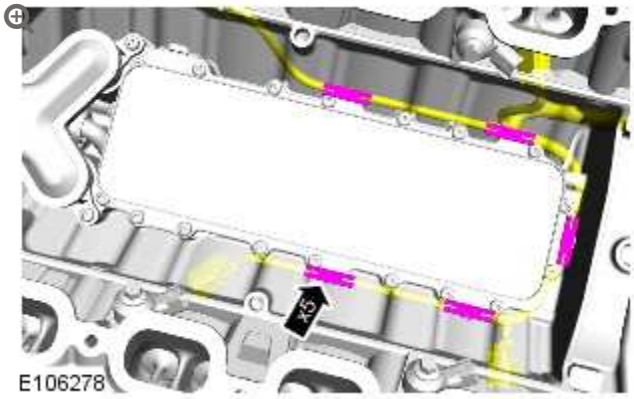

7. **CAUTIONS:**

- Be prepared to collect escaping oil.
- Be prepared to collect escaping coolant.

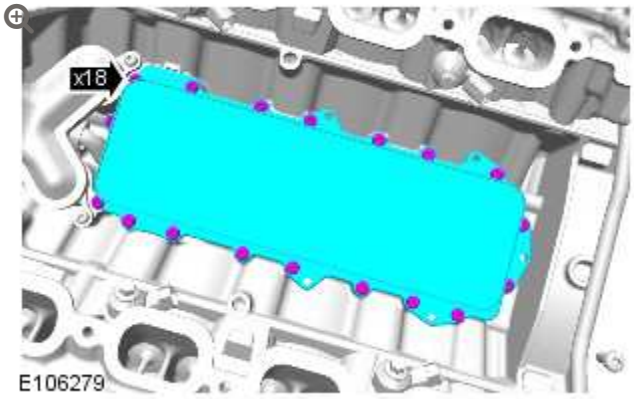

Torque: **13 Nm**

8.

CAUTION:

Make sure that these components are installed to the noted removal position.

NOTE:

Install a new gasket.

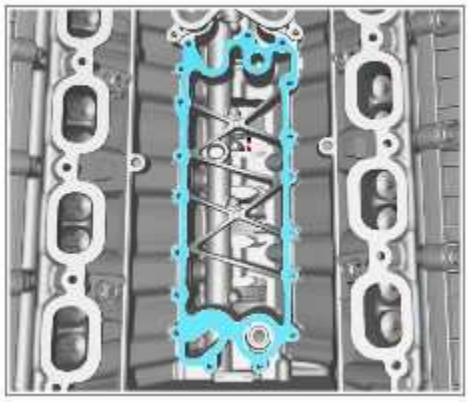

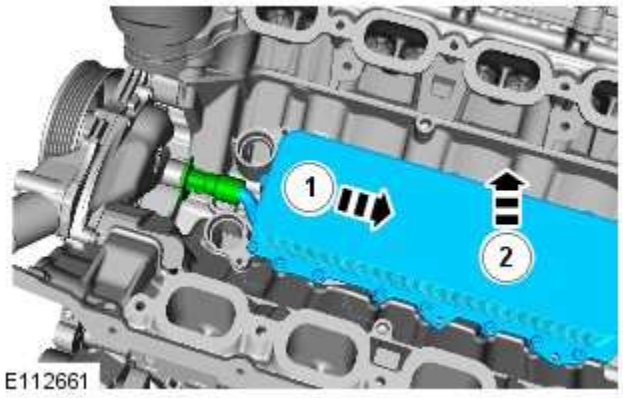

9.

CAUTIONS:

- Make sure that these components are installed to the noted removal position.
- Install new o-ring seals

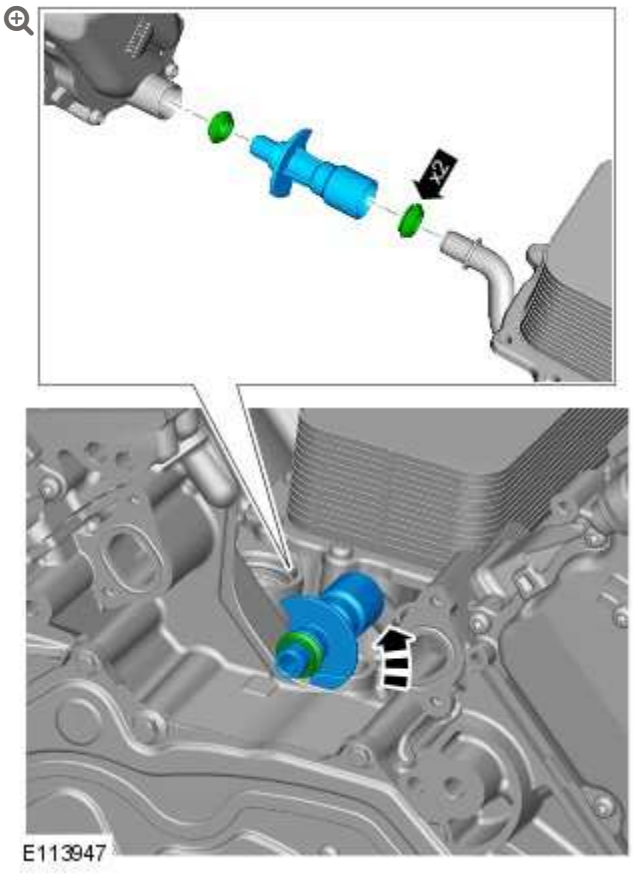

INSTALLATION

1.

CAUTIONS:

- Install all the bolts finger tight before final tightening.
- Make sure that the area around the component is clean and free of foreign material.
- Install the new seals.

NOTE:

Tighten the bolts in the indicated sequence.

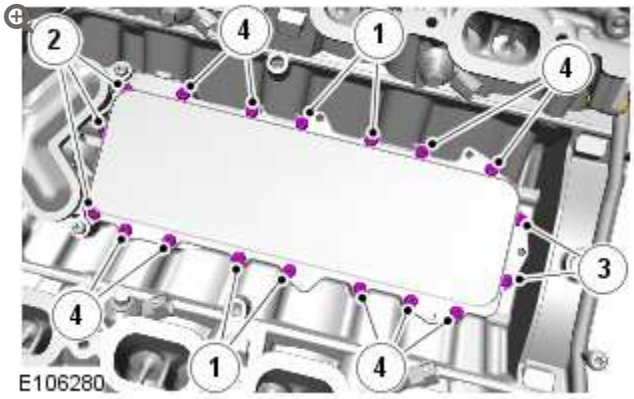

To install, reverse the removal procedure.

ENGINE – V8 S/C 5.0L PETROL

OIL FILTER ELEMENT (G1224580)

REMOVAL AND INSTALLATION

12.60.02	ELEMENT – OIL FILTER – RENEW	5000 CC, AJ V8	0.2	USED WITHINS	+

REMOVAL

NOTES:

- Removal steps in this procedure may contain installation details.
- Some variation in the illustrations may occur, but the essential information is always correct.

1. Refer to: Engine Cover - 5.0L (501-05, Removal and Installation).

2.

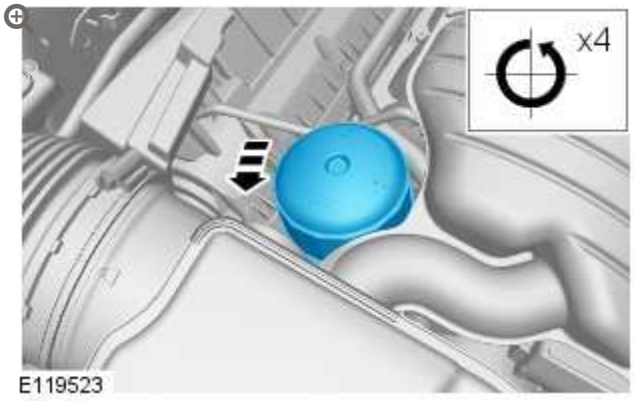

- Allow the engine oil to drain from the oil filter element housing for two minutes.

3.

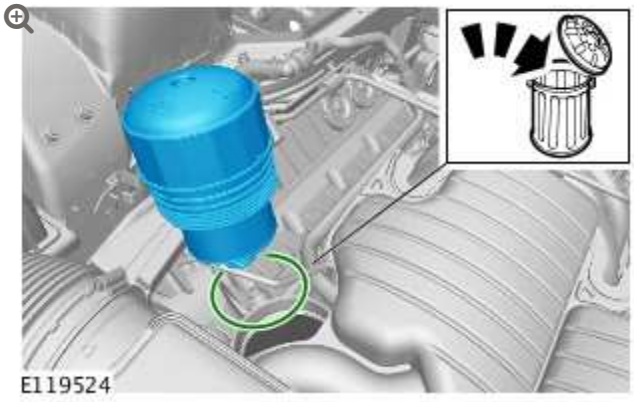

4.

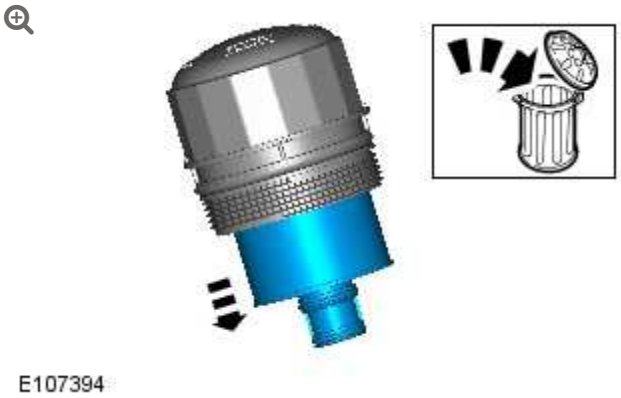

INSTALLATION

1. 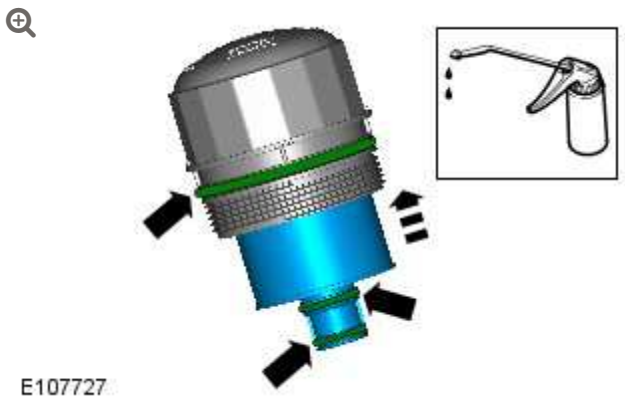

2. 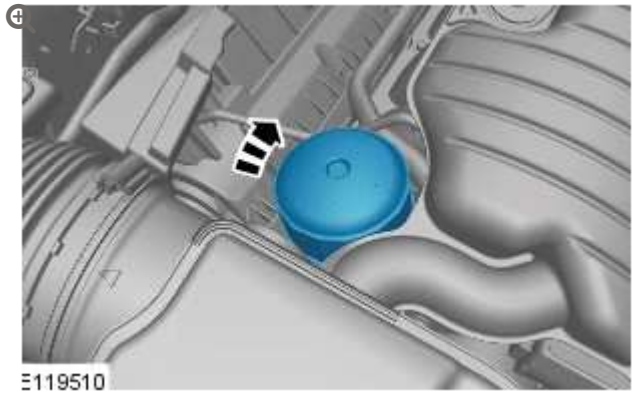

   Torque: **25 Nm**

3. Check and top-up the engine oil.

4. Start and run the engine.

5. Refer to: Engine Cover - 5.0L (501-05, Removal and Installation).

ENGINE – V8 S/C 5.0L PETROL

OIL PAN EXTENSION (G1224605)

REMOVAL AND INSTALLATION

SPECIAL TOOL(S)



303-1433

Lower Timing Cover Alignment tool



303-1442

Rear Crankshaft Seal Installer



303-1443

Rear Crankshaft Cover Alignment Tool



303-1500

Installer, Stretchy Belt

REMOVAL

NOTES:

- Removal steps in this procedure may contain installation details.
- Some variation in the illustrations may occur, but the essential information is always correct.

1. Disconnect the battery ground cable.
   Refer to: Specifications (414-00, Specifications).

2.

WARNING:

Do not work on or under a vehicle supported only by a jack. Always support the vehicle on safety stands.

Raise and support the vehicle.

3. Refer to: Crankshaft Pulley (303-01 Engine - V8 S/C 5.0L Petrol, Removal and Installation).

4. Refer to: Engine (303-01A Engine - V8 5.0L Petrol, Removal).

5. 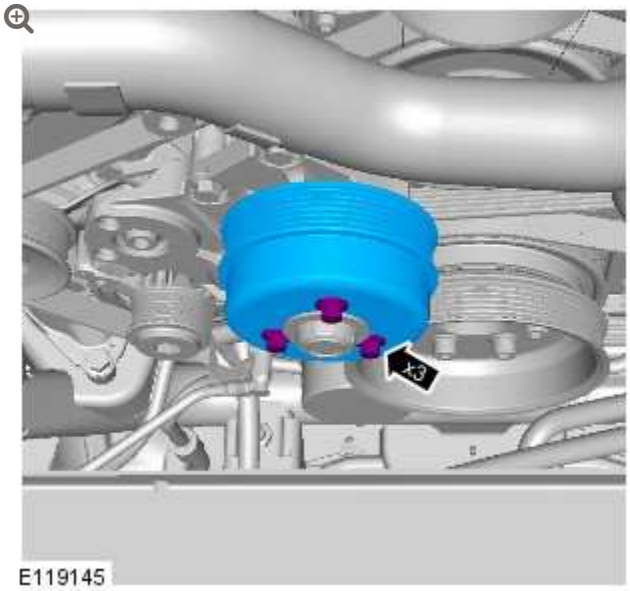

6. 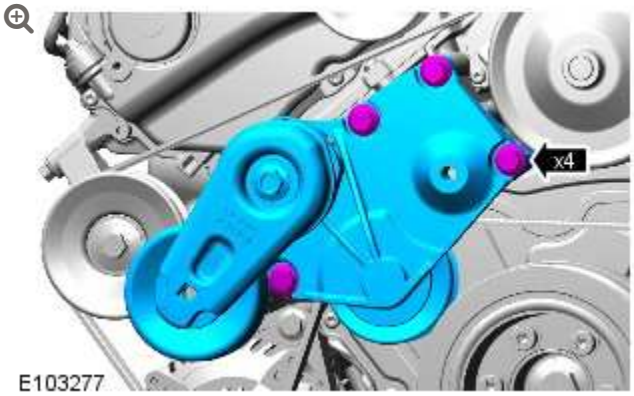

7.



8.

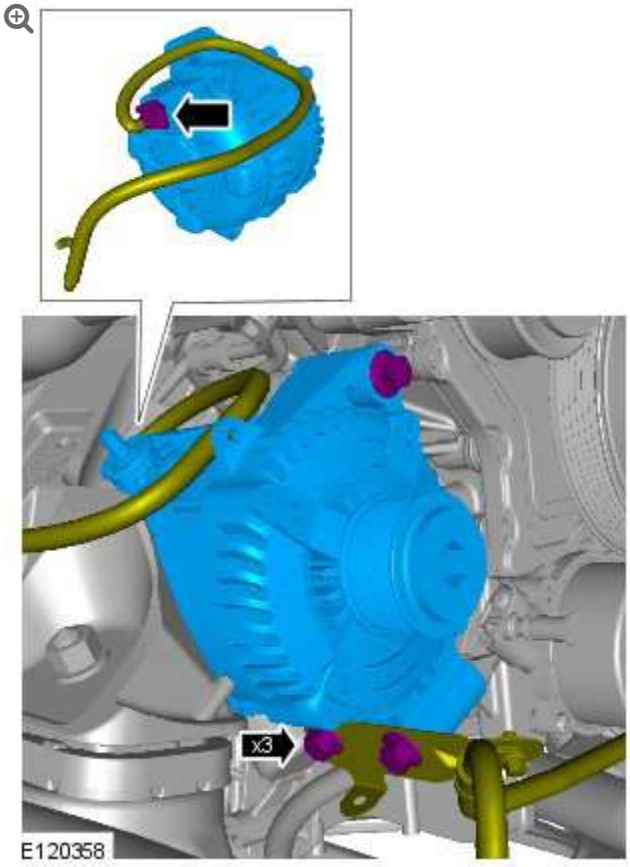

9.

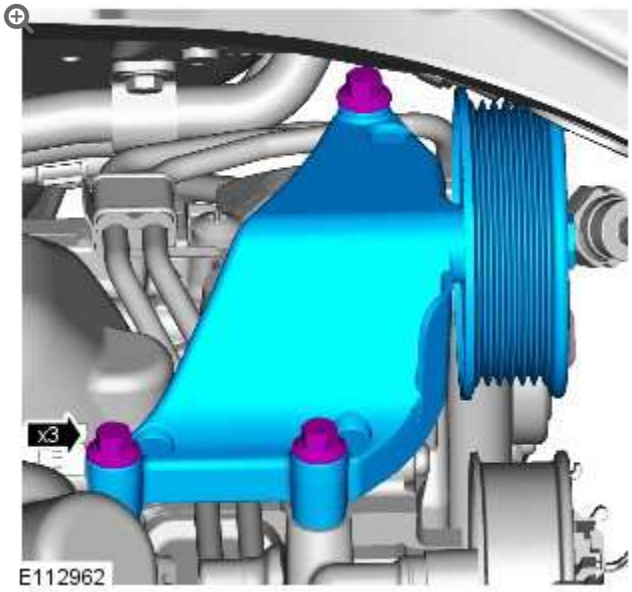

10.

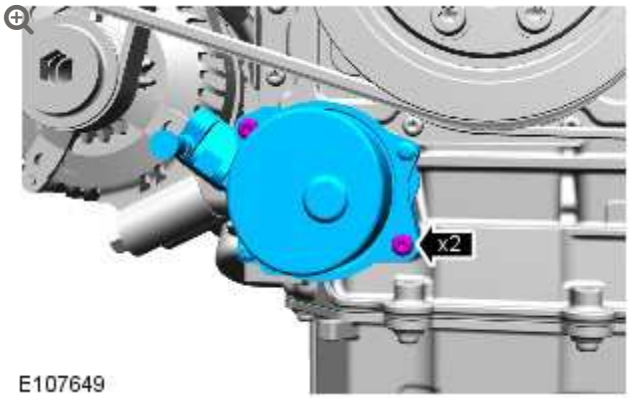

11.

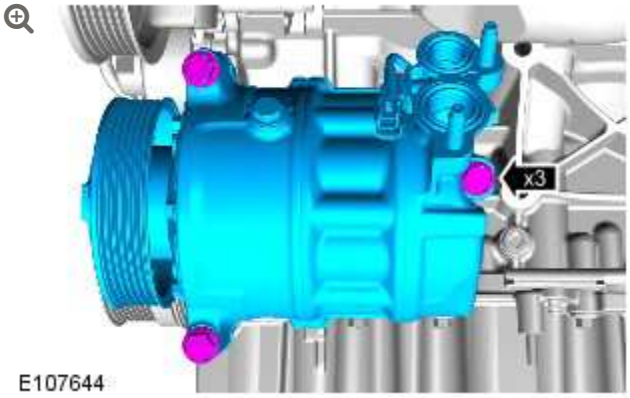

12.

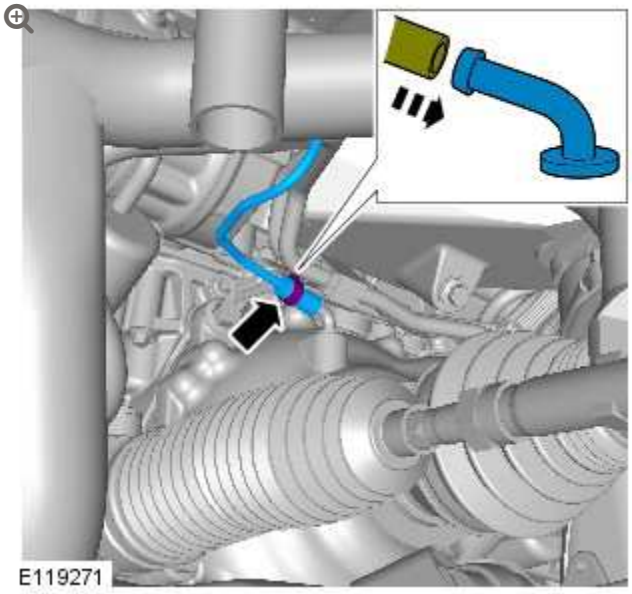

13.

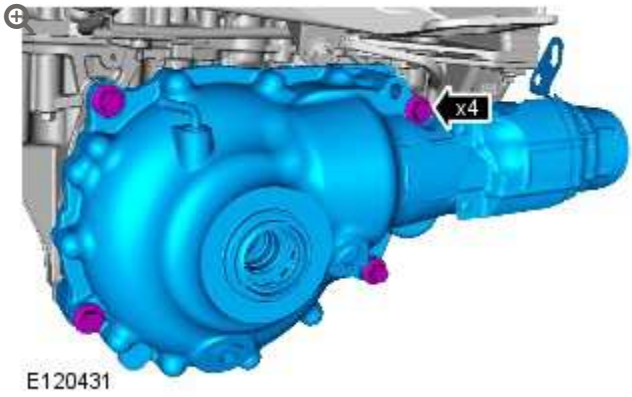

- Discard the O-ring seal.
- Remove and discard the halfshaft oil seal.

14.

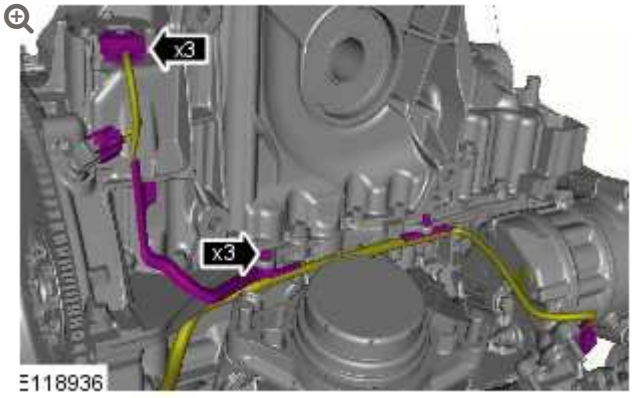

15.

CAUTIONS:

- The bolts can only be used 3 times, mark the bolts with a center punch. If 2 punch marks are visible, discard the bolts.
- Make sure that no components fall off during removal.

NOTES:

- Make sure that the crankshaft is not rotated.
- Make sure the crankshaft and flexplate mating faces are clean before installation.

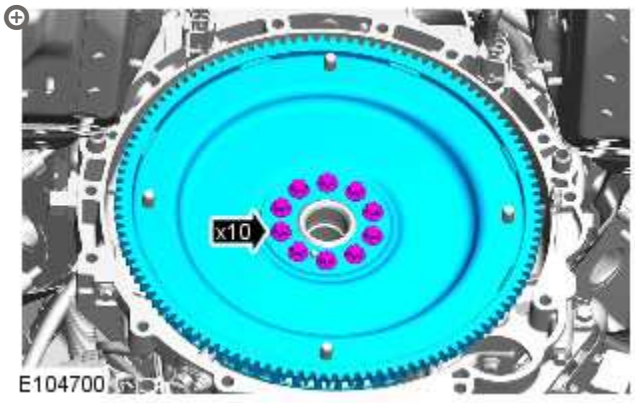

16.

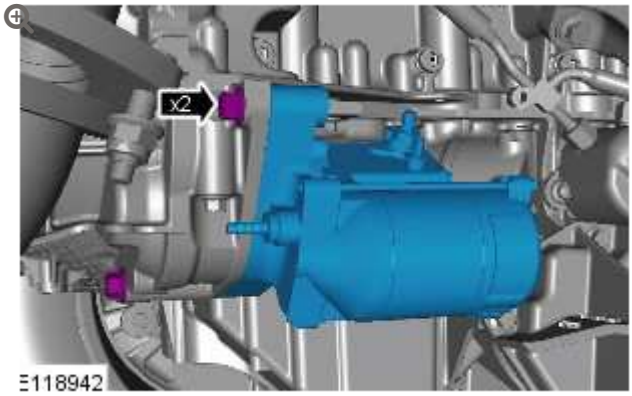

17.

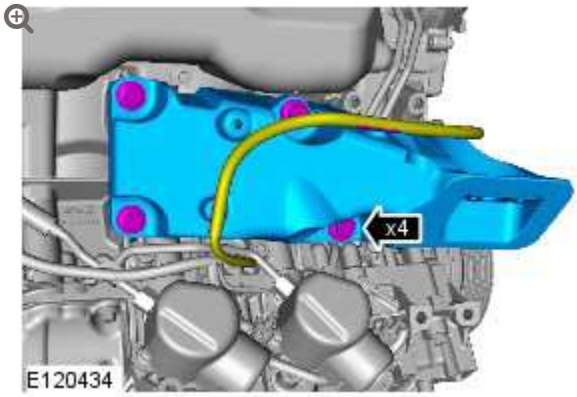

18.

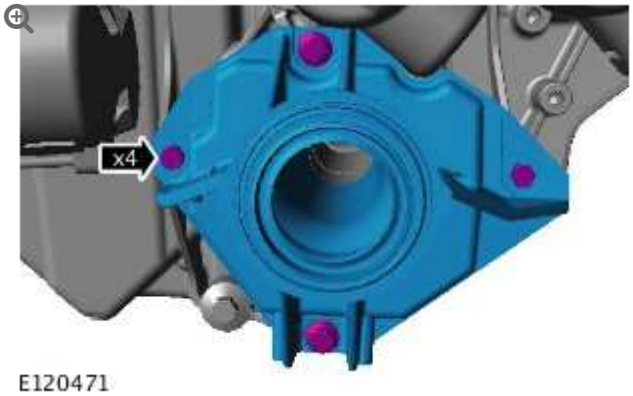

19.

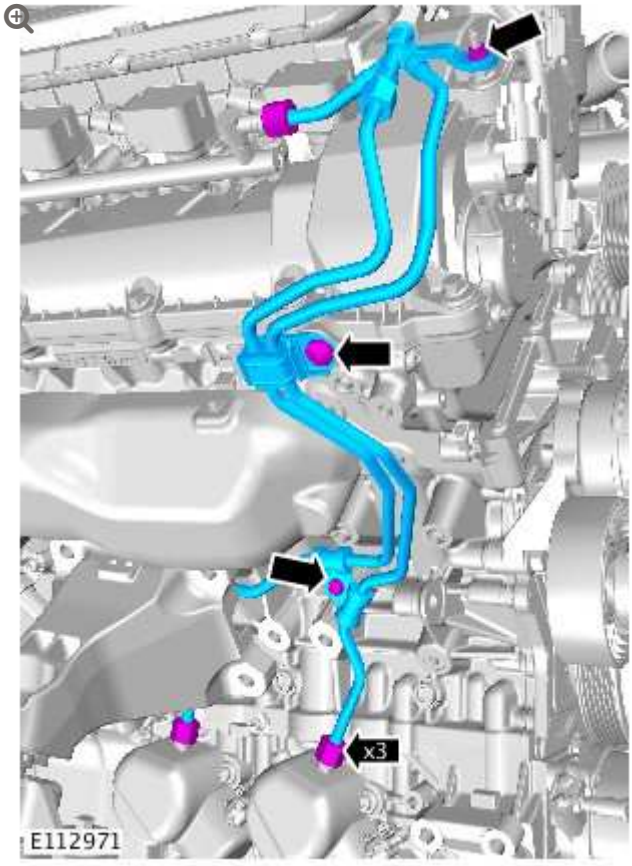

20.

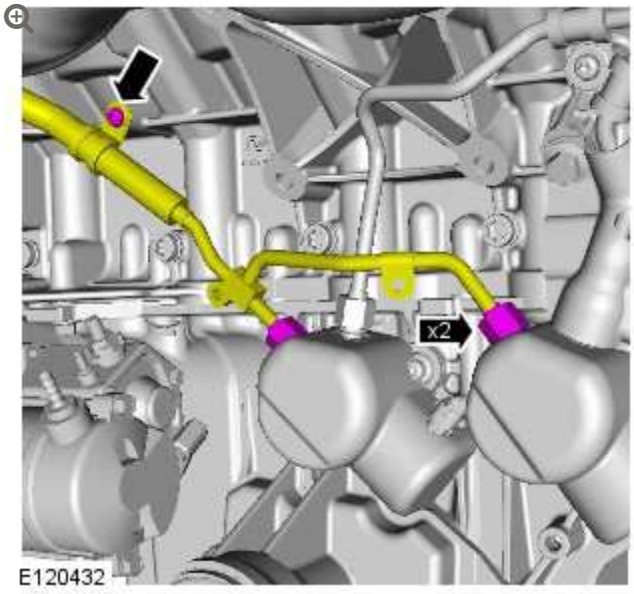

21.

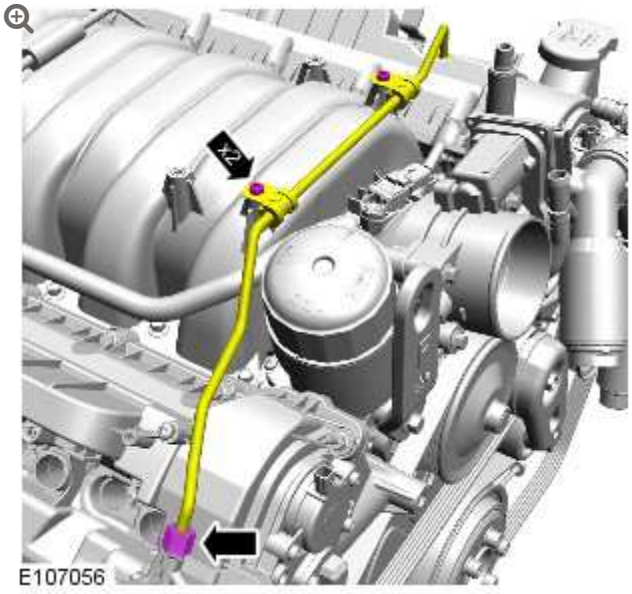

22.

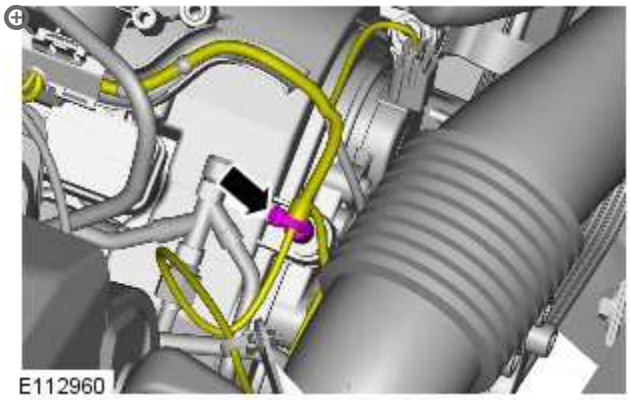

23.

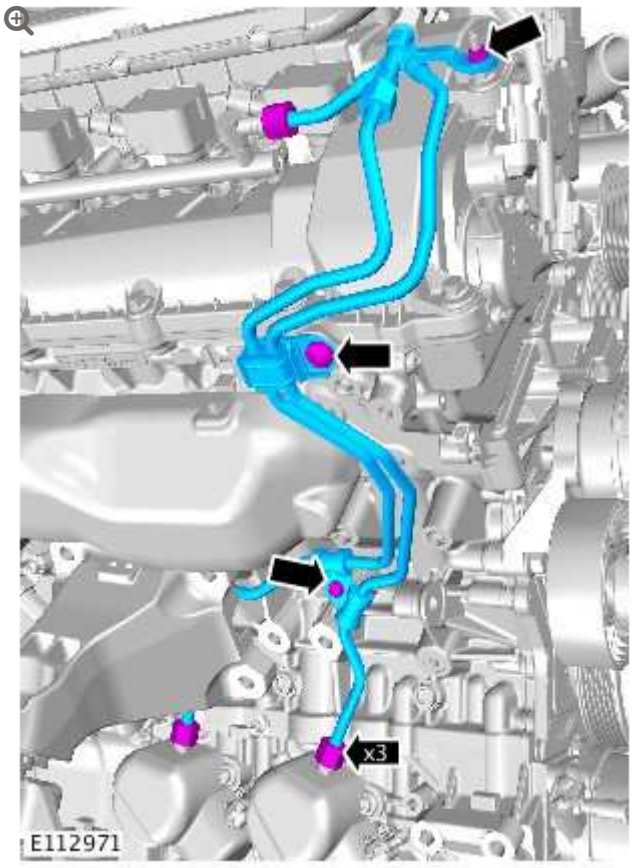

24.

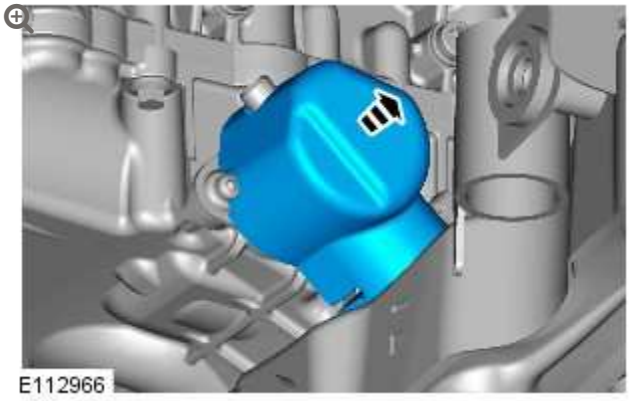

25.

CAUTION:

Be prepared to collect escaping fluids.

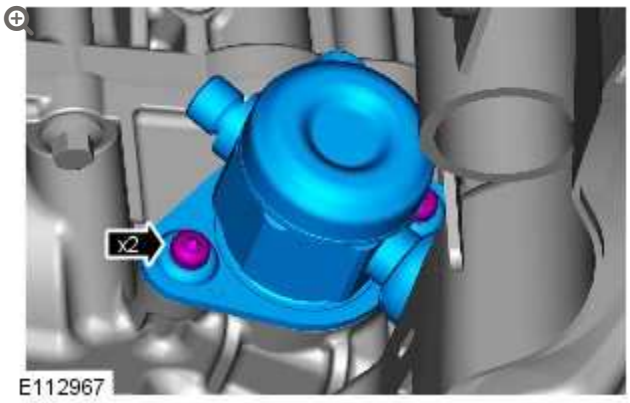

26.

CAUTION:

Be prepared to collect escaping fluids.

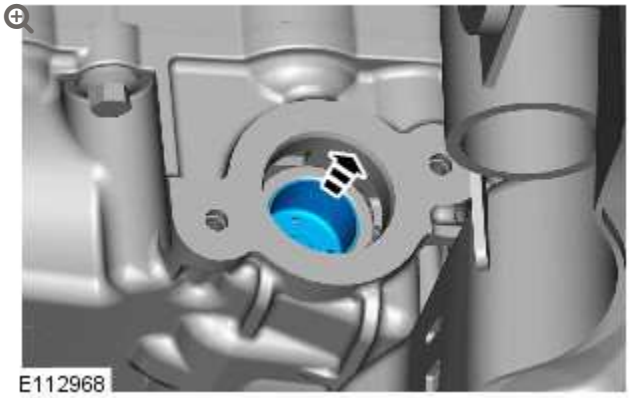

27.

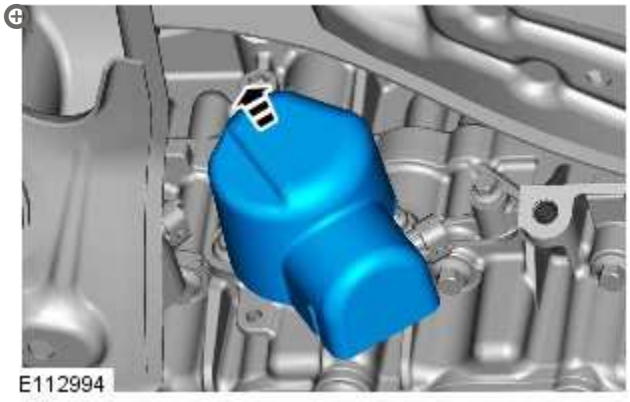

28.

CAUTION:

Be prepared to collect escaping fluids.

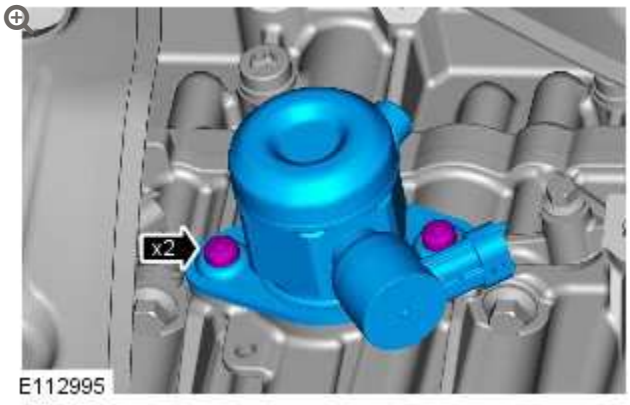

29.

CAUTION:

Be prepared to collect escaping fluids.



30.



31.

NOTE:

Discard the component.

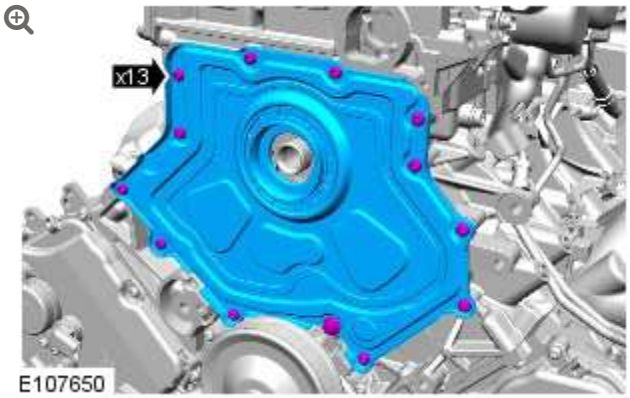

32.

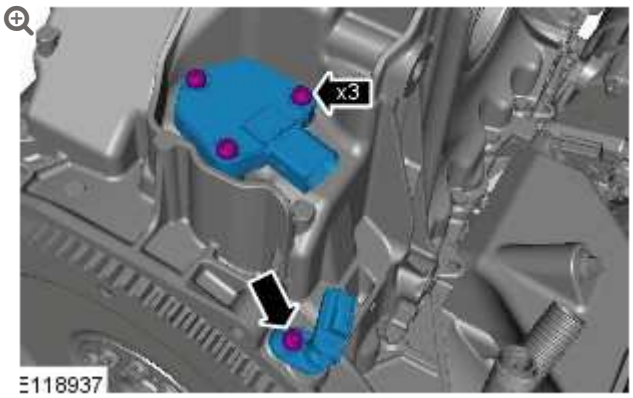

33.



34.

NOTE:

Make sure to use the aluminium lug provided on the oil pan extension to lever against.

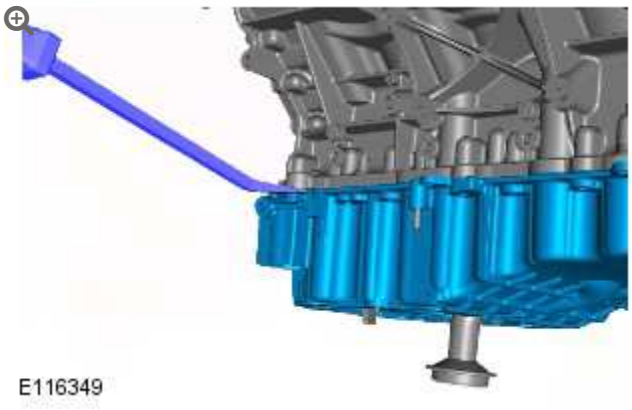

35.

NOTE:

Do not disassemble further if the component is removed for access only.

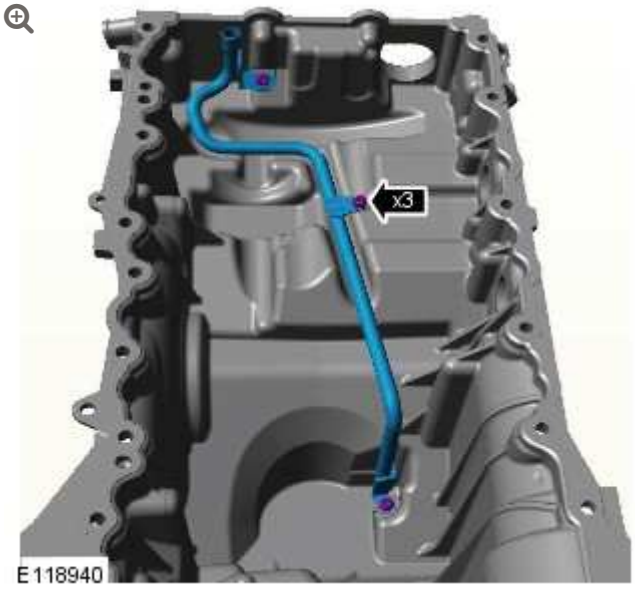

INSTALLATION

1.

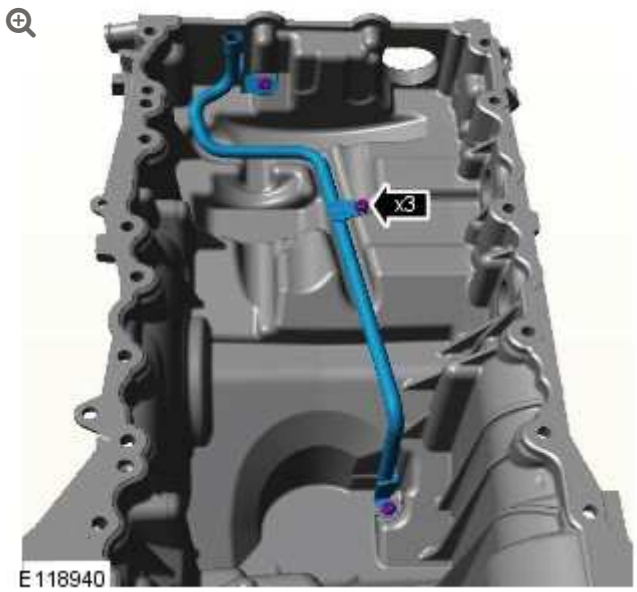

Torque: **10 Nm**

2.

CAUTIONS:

- Make sure that the mating faces are clean and free of foreign material.
- Use only a plastic scraper when removing the sealing material.

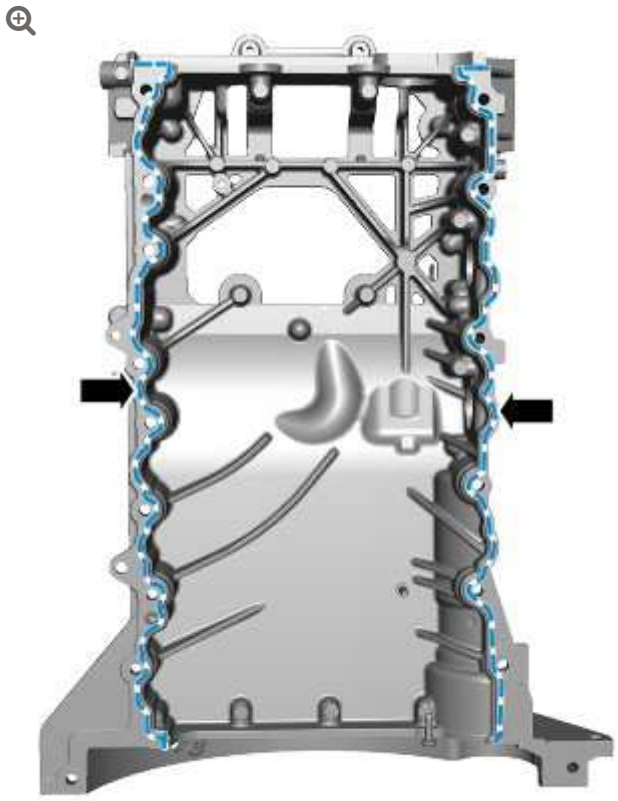

E107654

- Apply RTV sealant WSE-M4G323-A6 (Loctite 5901G) to the areas shown, and tighten the bolts within 7 minutes.

3. **NOTE:**

Tighten the bolts in the indicated sequence.

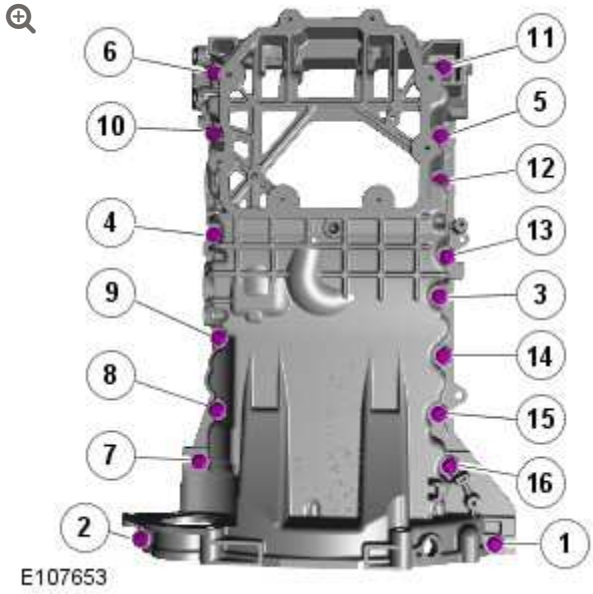

Torque: **25 Nm**

4.

CAUTION:

Make sure that the mating faces are clean and free of foreign material.

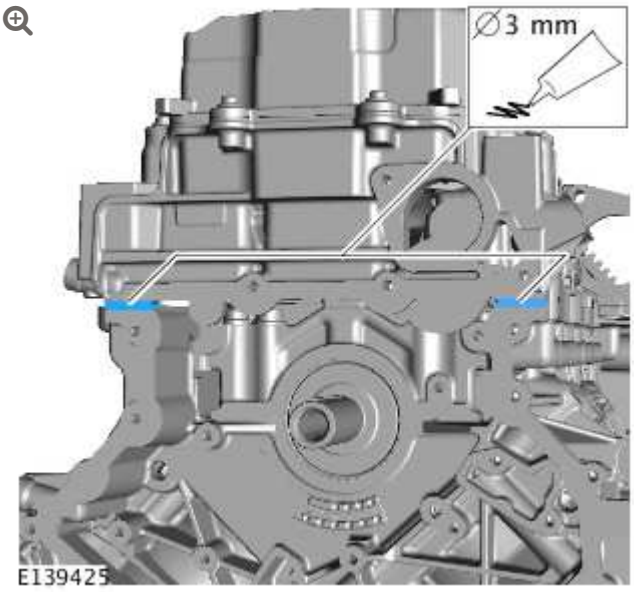

Apply RTV sealant WSE-M4G323-A6 (Loctite 5901G) to the areas shown, and tighten the bolts within 7 minutes.

5.

CAUTION:

Make sure that the mating faces are clean and free of foreign material.

NOTE:

Install new lower timing cover.

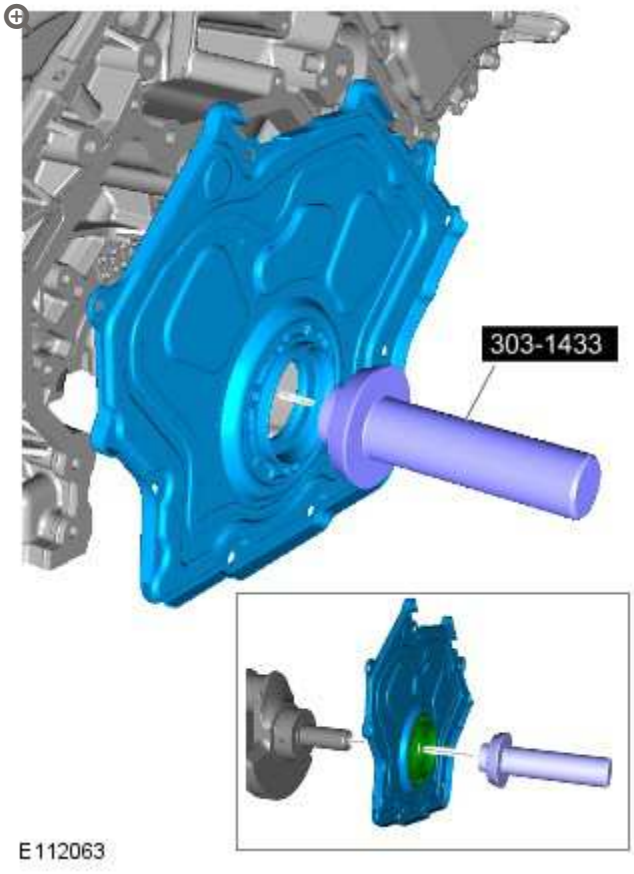

Install the bolts, but do not tighten fully at this stage.
Special Tool(s): 303-1433

6.

NOTE:

Tighten the bolts in the indicated sequence.

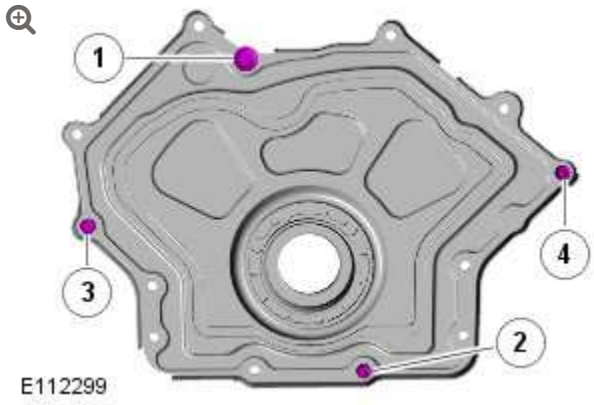

- *Torque:*

  M8 **20 Nm**

  M6 **12 Nm**

7. Remove the special tools.

8. 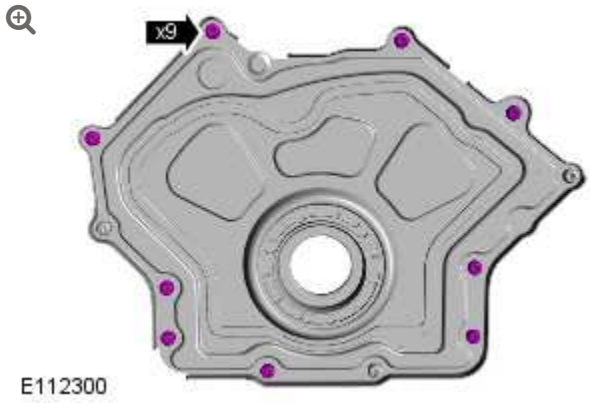

Torque: **12 Nm**

9.

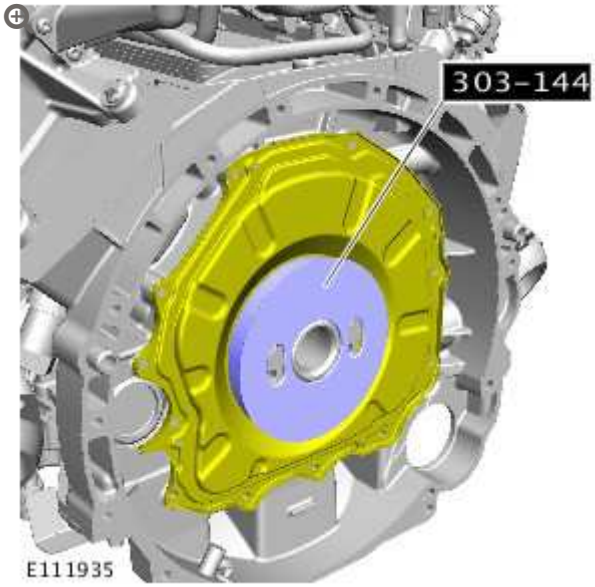

- *Special Tool(s):* 303-1442
- *Special Tool(s):* 303-1443

10. Remove the special tools.

11. **NOTE:**

    Tighten the bolts in the indicated sequence.

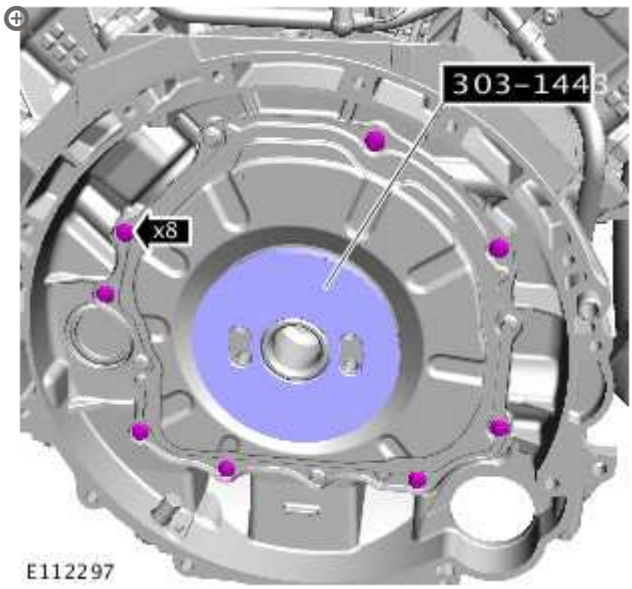

Torque: **11 Nm**

12.

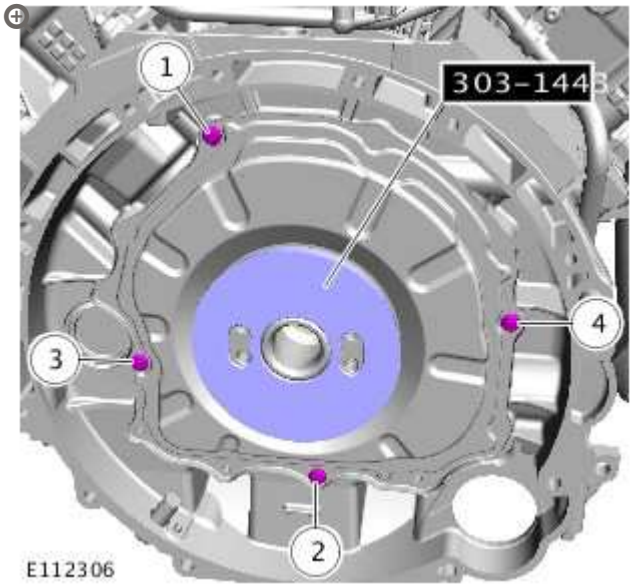

Torque: **11 Nm**

13.

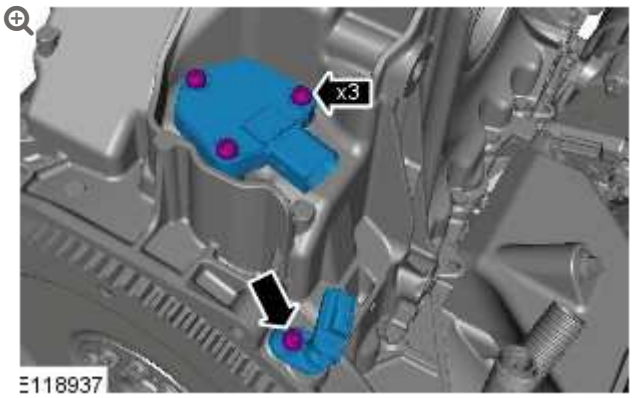

- *Torque:* **11 Nm**

14.

NOTE:

The high-pressure fuel pumps are removed from the illustration for clarity.

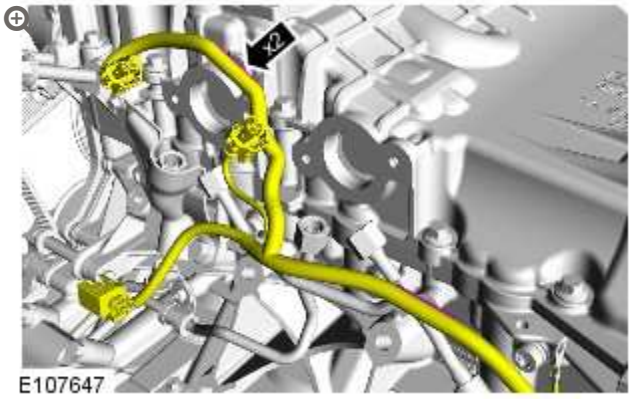

15.

NOTE:

Lubricate the fuel rail high-pressure fuel pump bucket with clean engine oil.

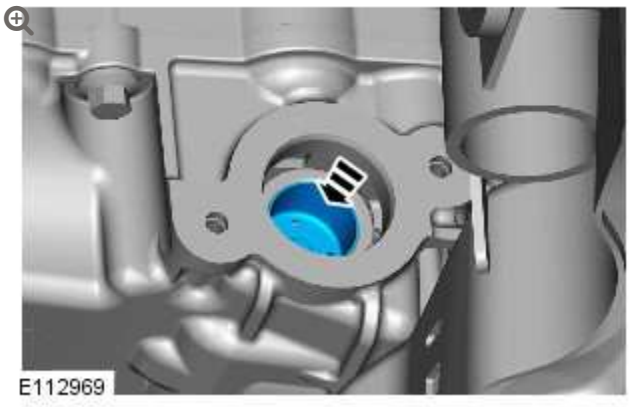

16.

CAUTION:

Tighten the Torx screws a turn at a time until the correct torque is achieved.

NOTE:

Lubricate the fuel rail high-pressure fuel pump O-ring seal with clean engine oil.

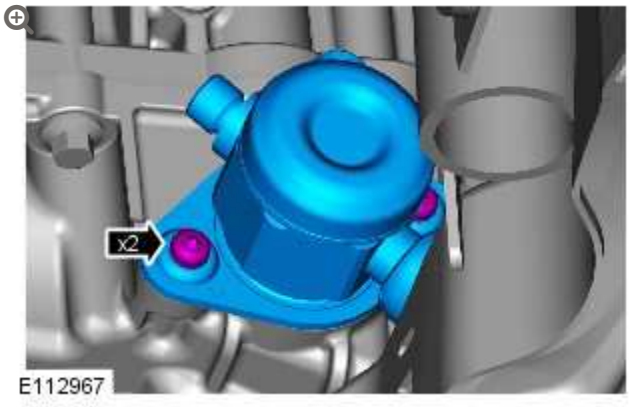

- *Torque:* **11 Nm**

17.

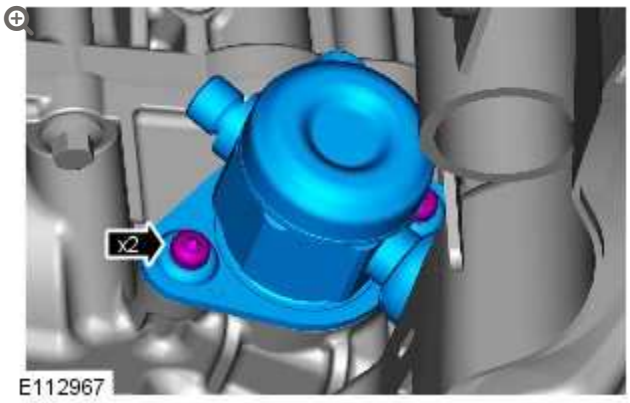

Loosen the Torx screws half a turn each.

18.

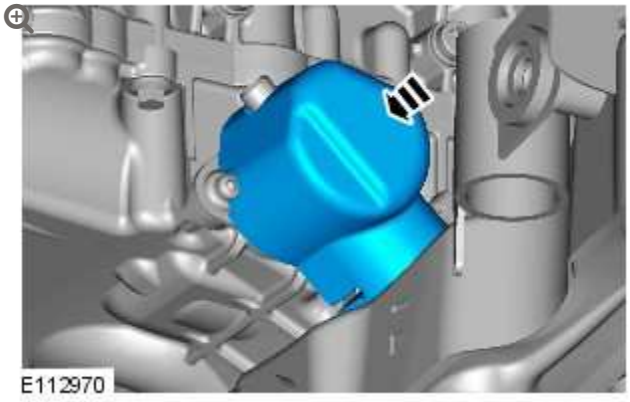

19.

NOTE:

Lubricate the fuel rail high-pressure fuel pump bucket with clean engine oil.



20.

CAUTION:

Tighten the Torx screws a turn at a time until the correct torque is achieved.

NOTE:

Lubricate the fuel rail high-pressure fuel pump O-ring seal with clean engine oil.

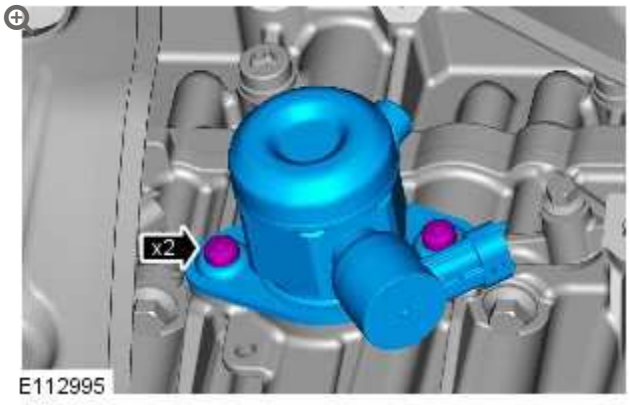

- *Torque:* **11 Nm**

21.

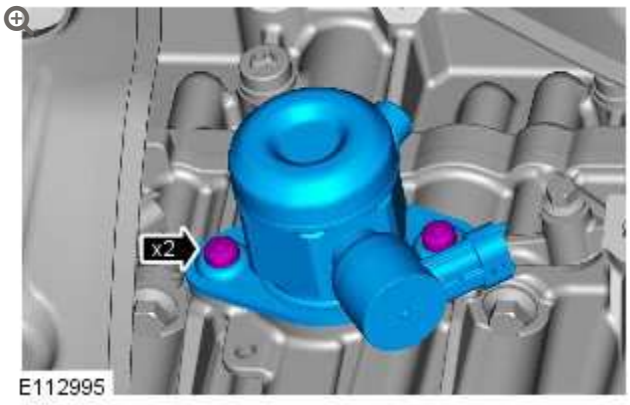

Loosen the Torx screws half a turn each.

22.

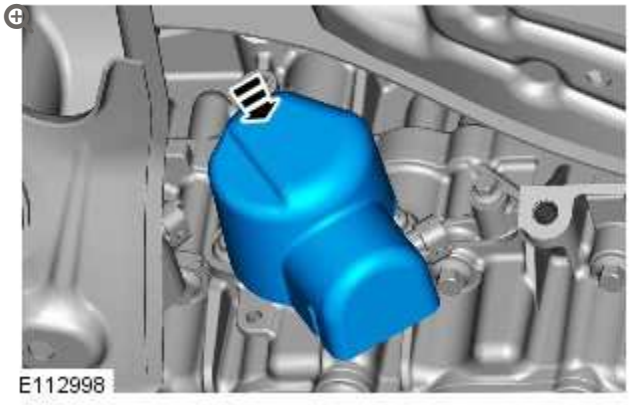

23.

CAUTION:

Care must be taken when positioning the fuel rail high-pressure fuel pump cover to one side.

NOTE:

Fuel rail high-pressure fuel pump cover shown removed for clarity.

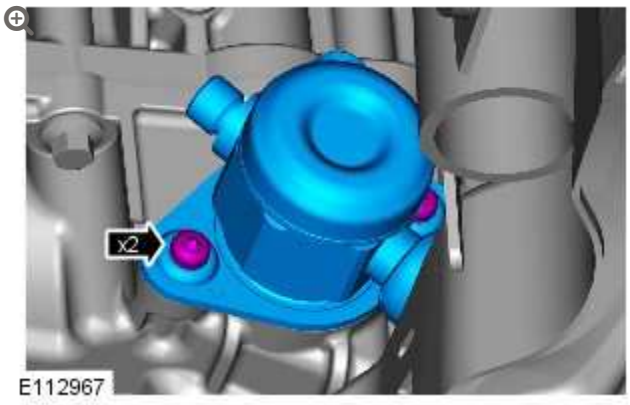

- *Torque:* **11 Nm**

24.

CAUTION:

Care must be taken when positioning the fuel rail high-pressure fuel pump cover to one side.

NOTE:

Fuel rail high-pressure fuel pump cover shown removed for clarity.

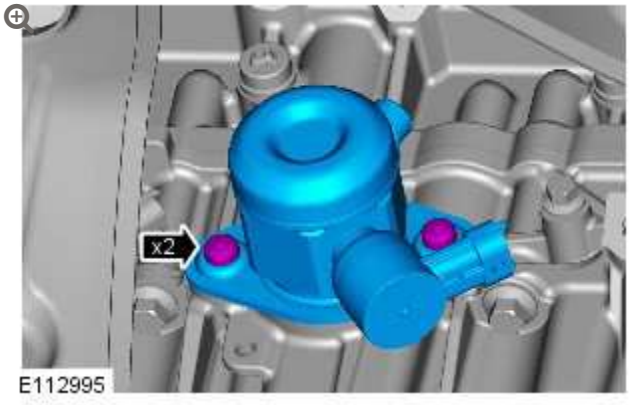

- *Torque:* **11 Nm**

25.

CAUTIONS:

- Install new high-pressure fuel supply lines.
- Lubricate only the union threads with clean engine oil.

NOTES:

- Remove and discard the blanking caps.
- Install the bolt and unions fully finger tight before final tightening.

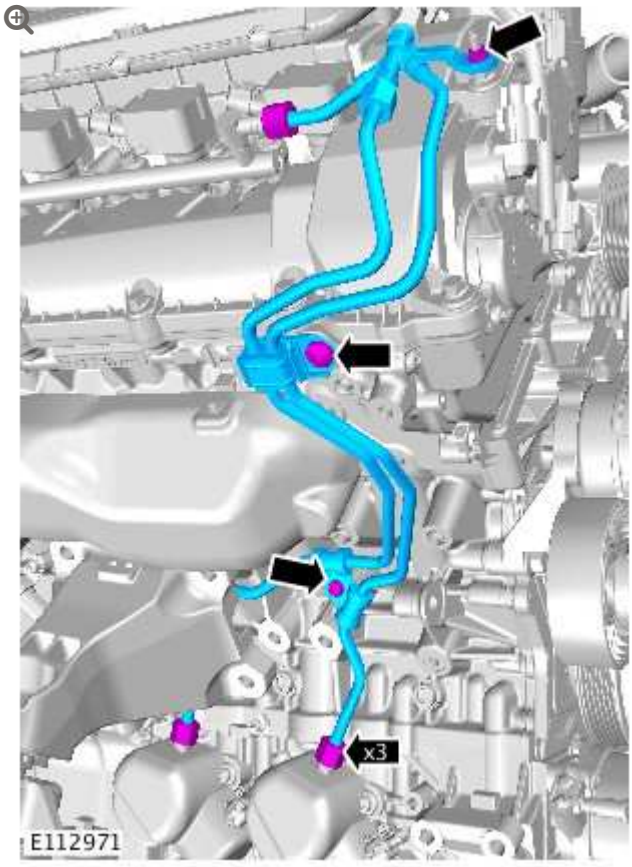

Do not fully tighten at this stage.

26.

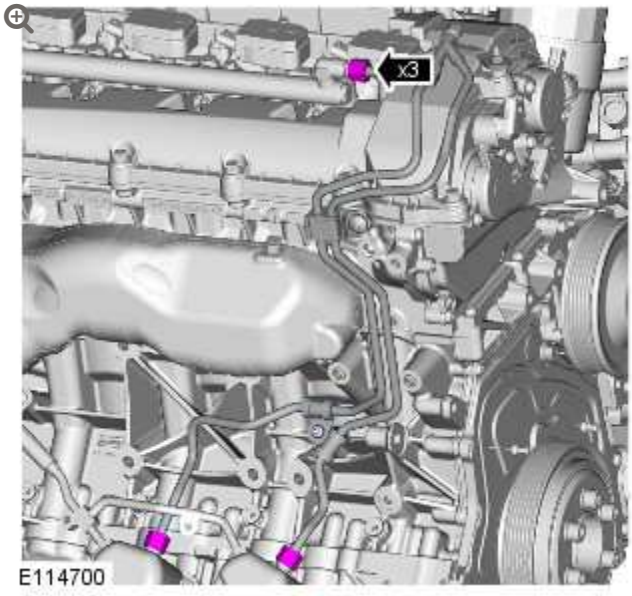

- *Torque:* **21 Nm**

27.

NOTES:

- Install the bolt and unions finger tight before final tightening.
- Remove and discard the blanking caps.

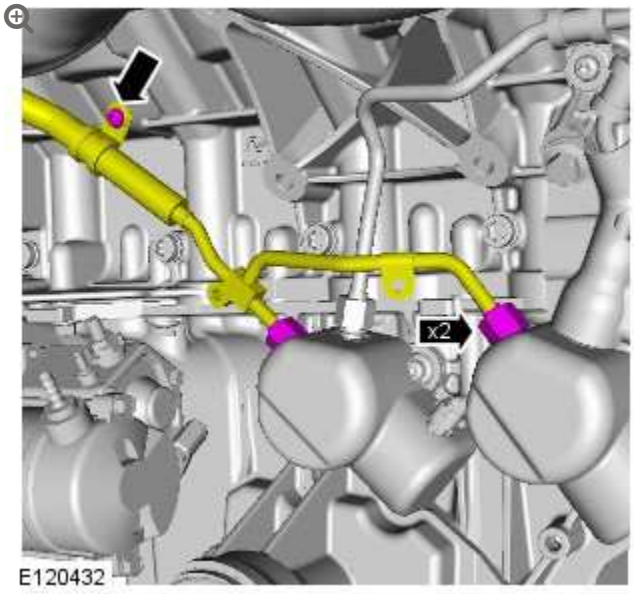

- *Torque:*

  Unions **21 Nm**

  M6 **11 Nm**

28.

CAUTION:

Make sure that a new component is installed.

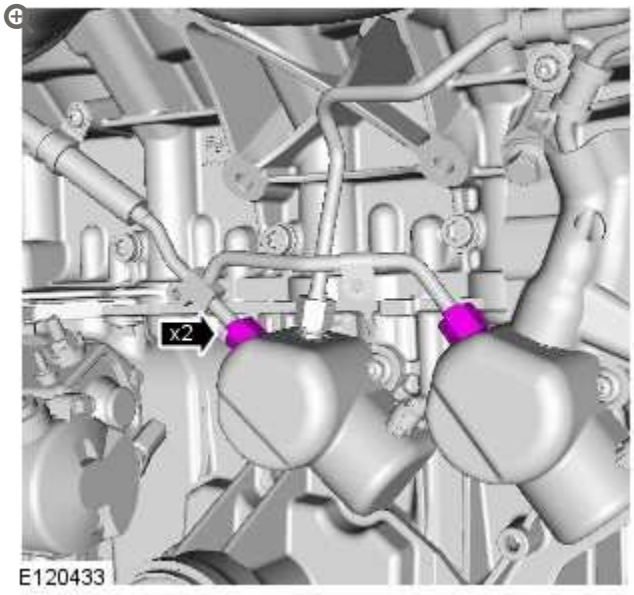

- *Torque:* **21 Nm**

29.

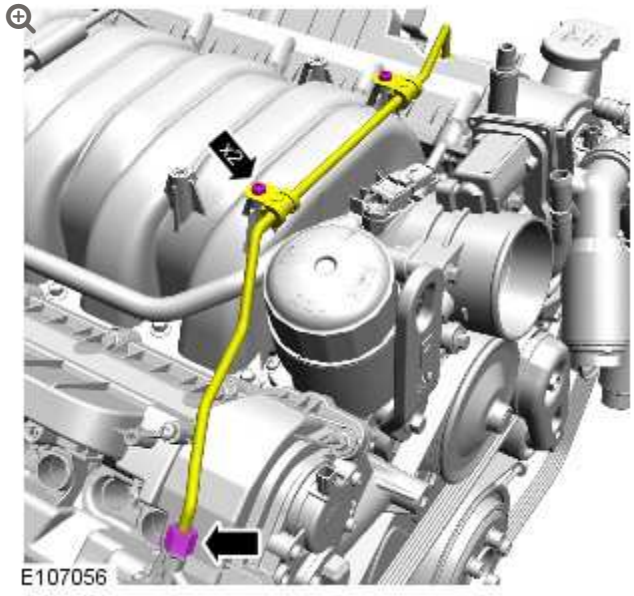

Torque:

Unions **21 Nm**

M6 **8 Nm**

30.

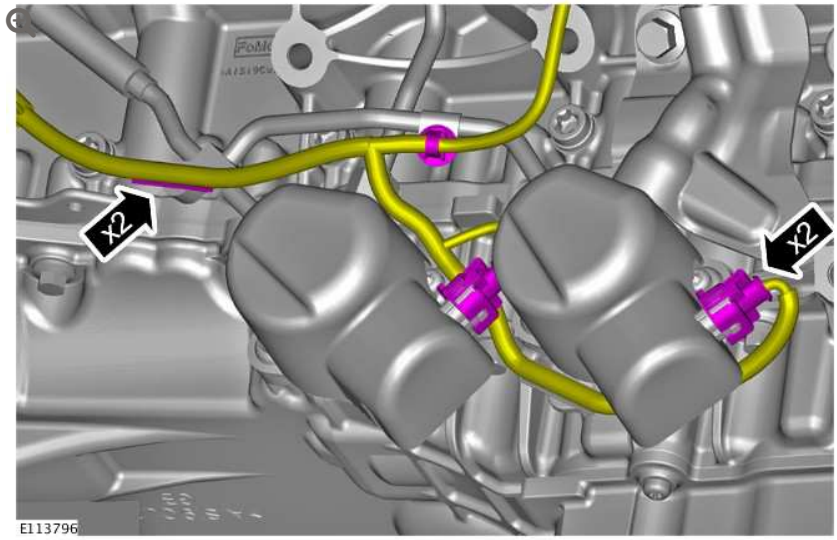

31.

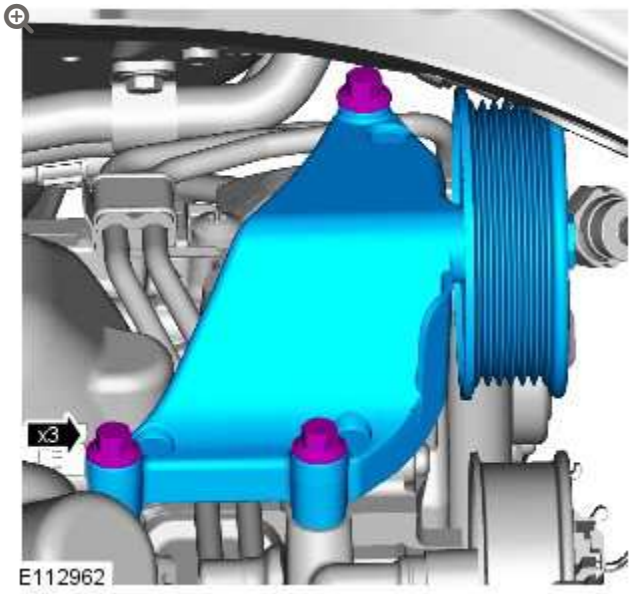

Torque: **25 Nm**

32.

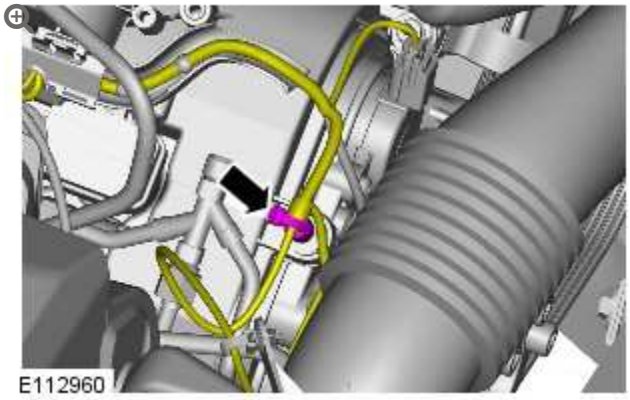

33.

CAUTION:

Install all the bolts finger tight before final tightening.

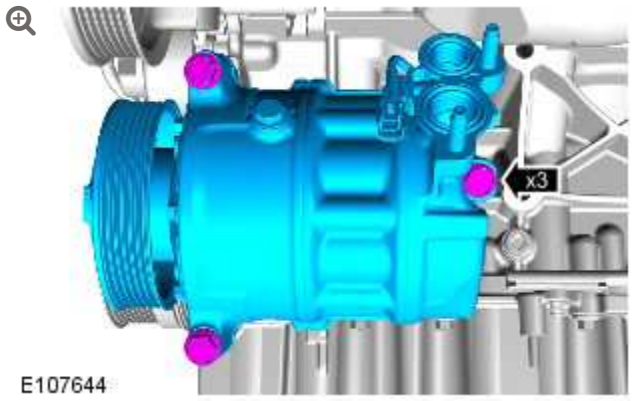

Torque: **25 Nm**

34.

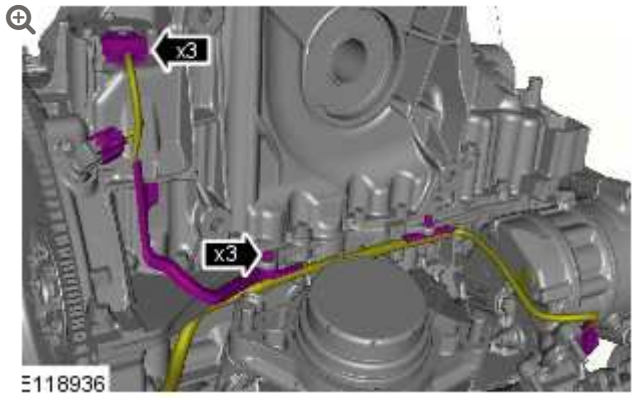

35.

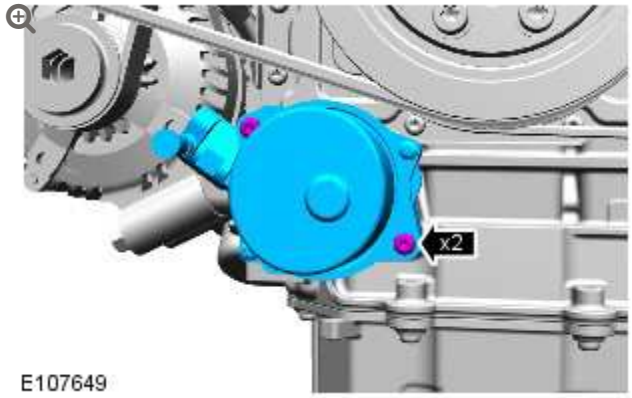

Torque: **12 Nm**

36.

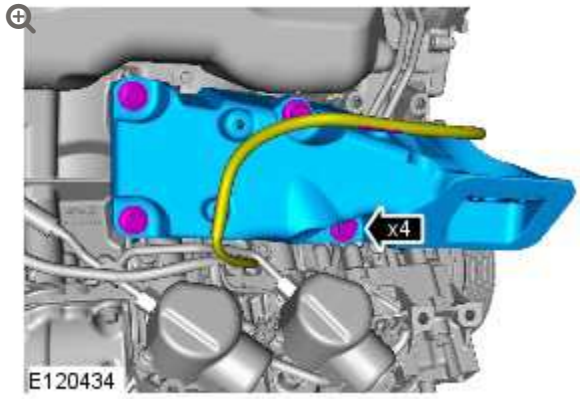

Torque:

Stage 1: **45 Nm**

Stage 2: **60°**

37.

CAUTION:

Install all the bolts finger tight before final tightening.

NOTE:

Tighten the bolts in the indicated sequence.

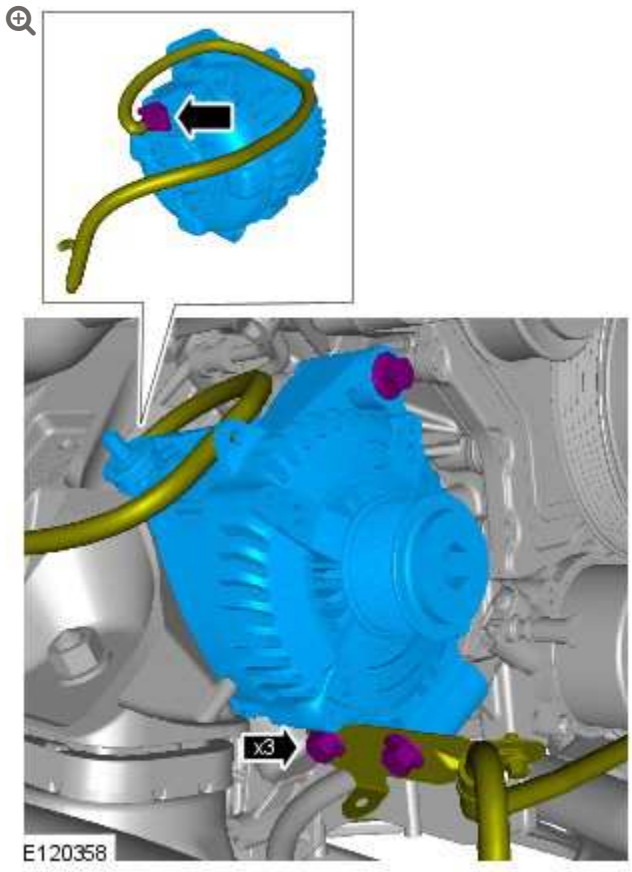

Torque: **48 Nm**

38.

CAUTIONS:

- Install all the bolts finger tight before final tightening.
- The bolts can only be used 3 times, mark the bolts with a center punch. If 2 punch marks are visible, discard the bolts.
- Install the bolts in the noted position.

NOTES:

- Make sure that the crankshaft is not rotated.
- Make sure the crankshaft and flexplate mating faces are clean before installation.
- Tighten the retaining bolts working diagonally.



Torque:

Stage 1: **45 Nm**

Stage 2: **90°**

39.

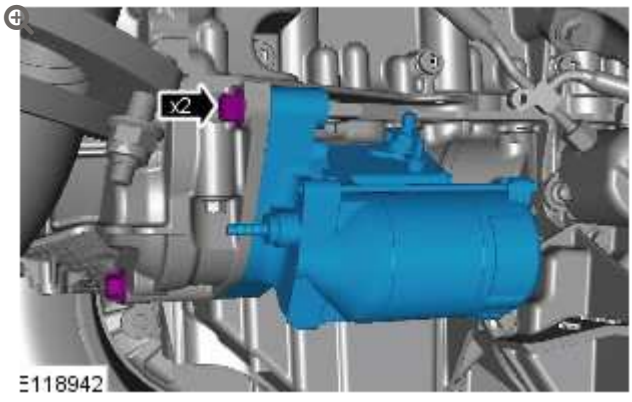

Torque: **48 Nm**

40. Install a new O-ring seal to the differential case.

41.

CAUTIONS:

- Make sure the O ring seal remains in its fitted position.
- Make sure that new bolts are installed.

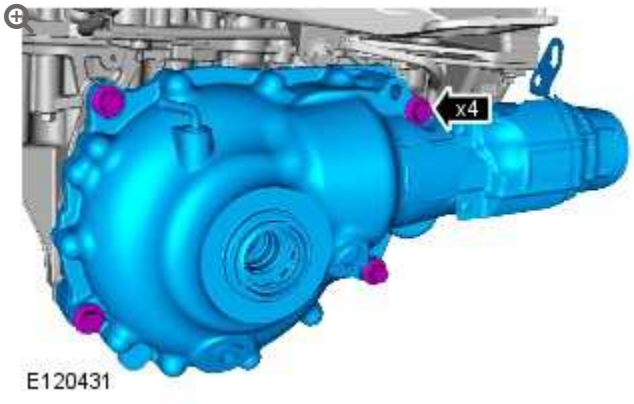

With assistance, align and secure the front differential case.

42.

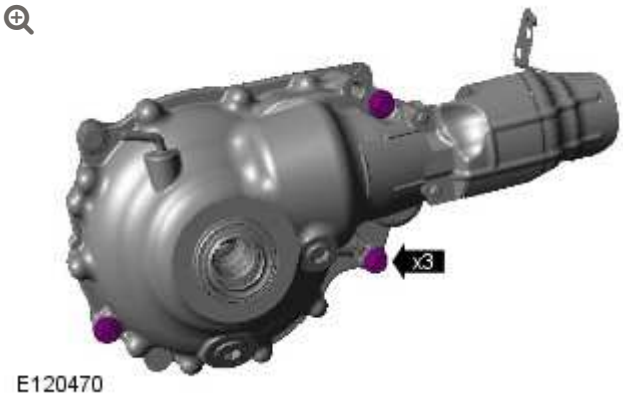

Tighten the 100 mm length bolts.

Torque:

Stage 1: **50 Nm**

Stage 2: **90°**

43.

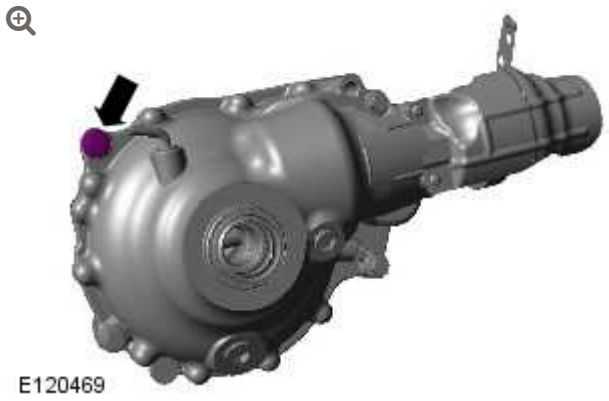

Tighten the 55 mm length bolts.

Torque:

Stage 1: **50 Nm**

Stage 2: **60°**

44.

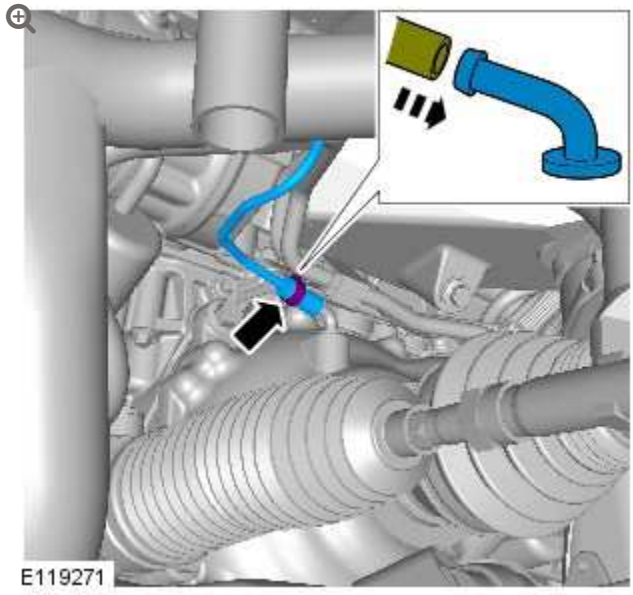

45.

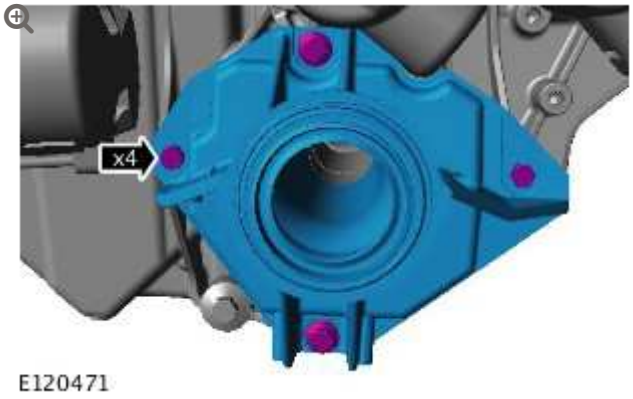

Torque: **22 Nm**

46.

NOTE:

Install the bolt finger tight before final tightening.



Torque: **40 Nm**

47.

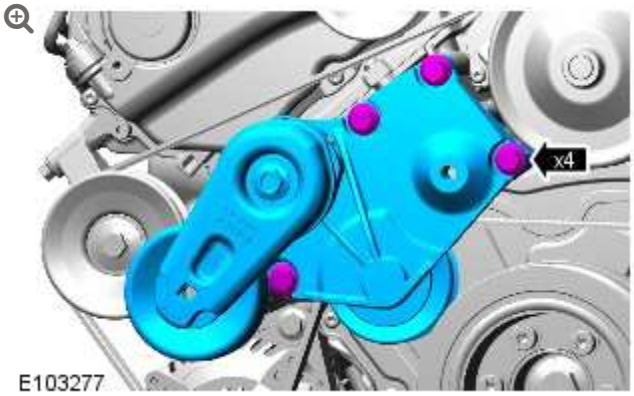

Torque: **25 Nm**

48.

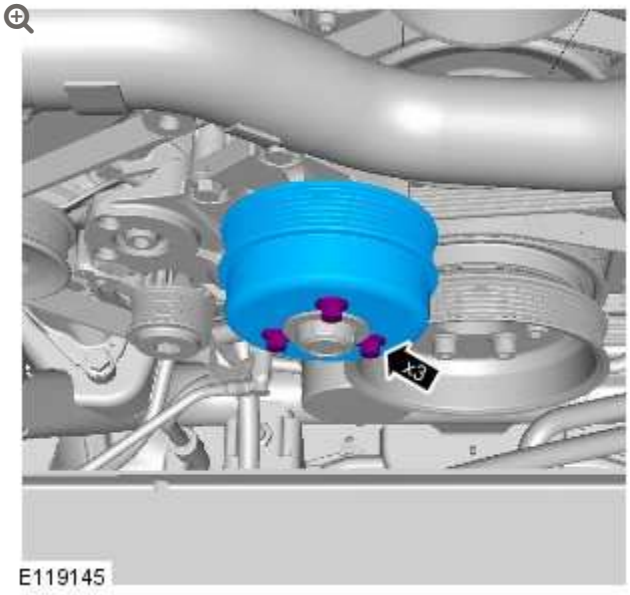

Torque: **25 Nm**

49. Refer to: Crankshaft Pulley (303-01 Engine - V8 S/C 5.0L Petrol, Removal and Installation).

50.

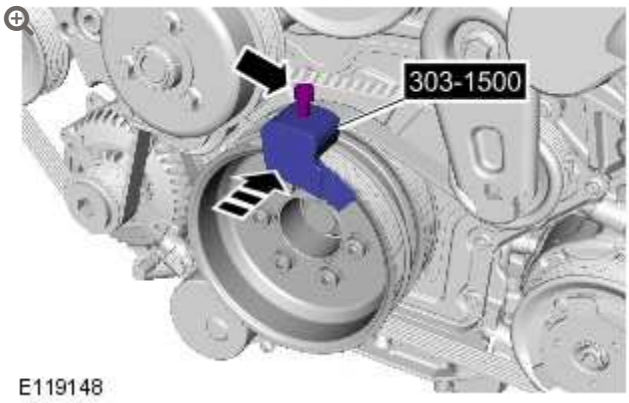

Special Tool(s): 303-1500

51.

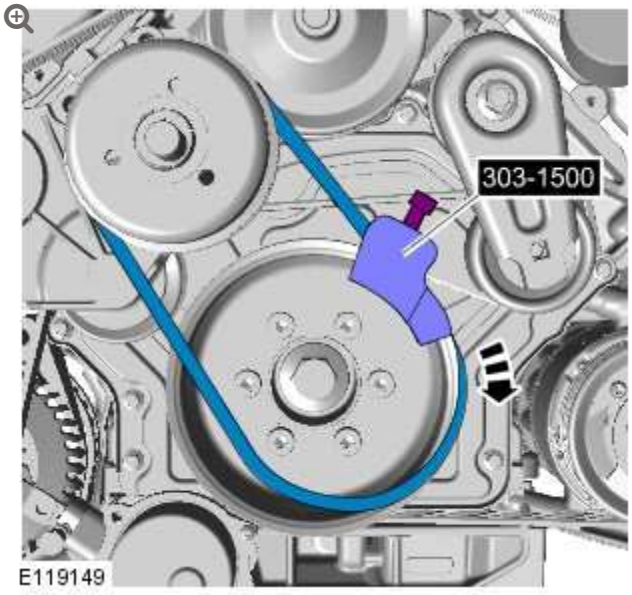

- Install the cooling fan belt.
- Rotate the engine clockwise twice, making sure that the belt is seated on both pulleys correctly.
- Remove the special tool.

52.

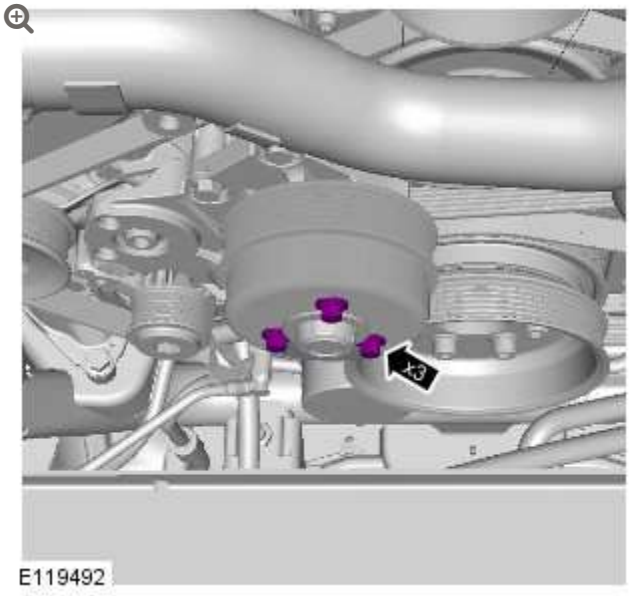

Torque: **25 Nm**

53. Refer to: Engine (303-01A Engine - V8 5.0L Petrol, Installation).

54. Lower the vehicle.

55. Connect the battery ground cable.
Refer to: Specifications (414-00, Specifications).

ENGINE – V8 S/C 5.0L PETROL

OIL PUMP (G1224606)

REMOVAL AND INSTALLATION

12.60.26	PUMP – OIL – RENEW	5000 CC, AJ V8, SUPERCHARGED	17.2	USED WITHINS	+

REMOVAL

NOTE:

Some variation in the illustrations may occur, but the essential information is always correct.

1. Disconnect the battery ground cable.
   Refer to: Specifications (414-00, Specifications).

2. **WARNING:**

   Make sure to support the vehicle with axle stands.

   Raise and support the vehicle.

3.

Refer to: Oil Pan Extension (303-01B Engine - V8 S/C 5.0L Petrol, Removal and Installation).

4.

NOTE:

Tsubaki timing drive only.

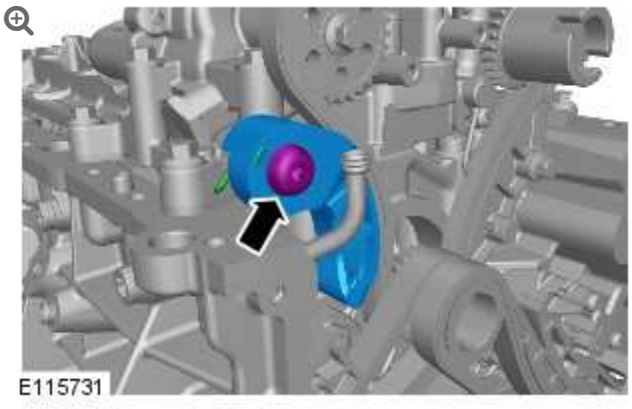

5.

NOTE:

INA timing drive only.

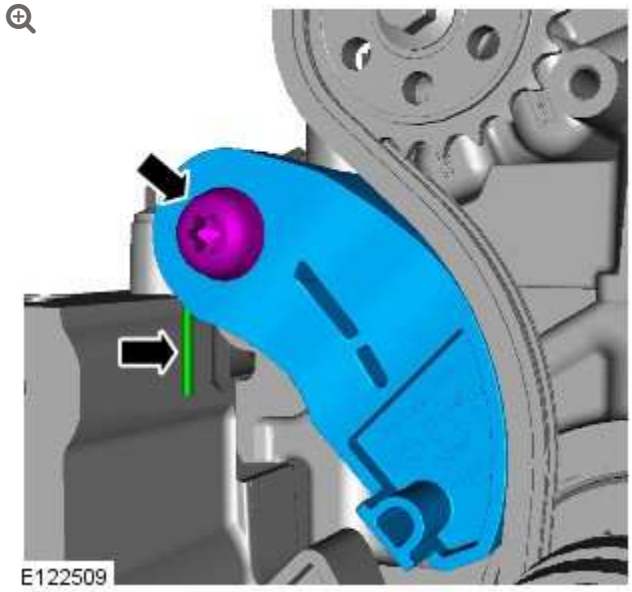

6.

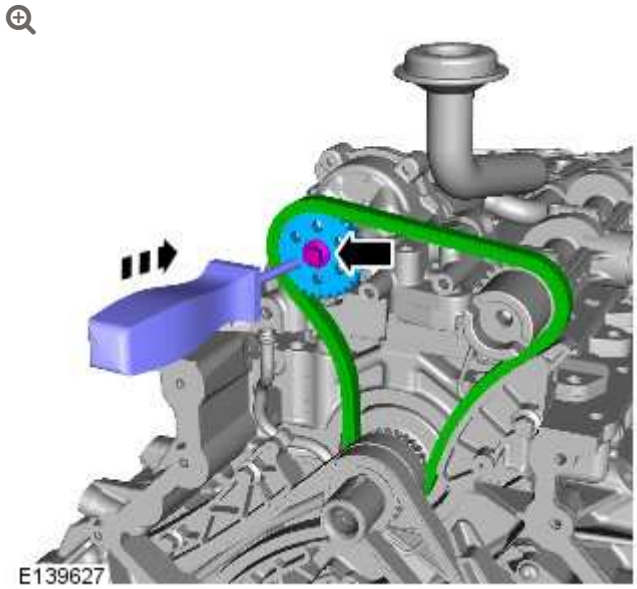

7.

NOTE:

Remove and discard the O-ring seal.

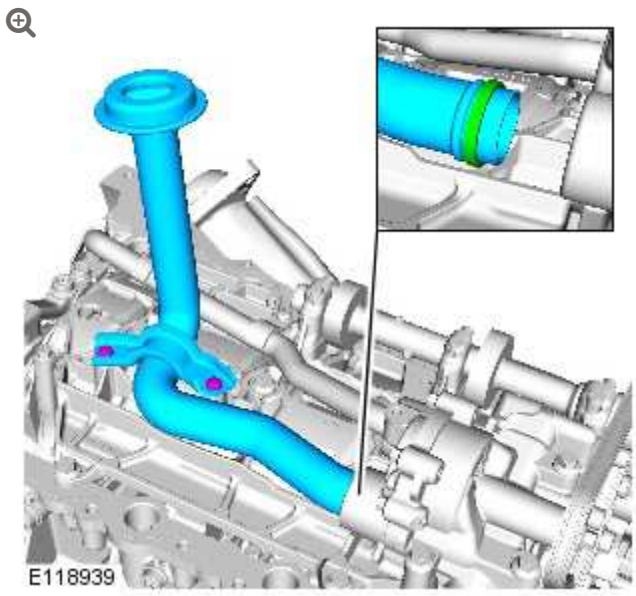

8.

CAUTION:

Remove and discard the O-ring seals.

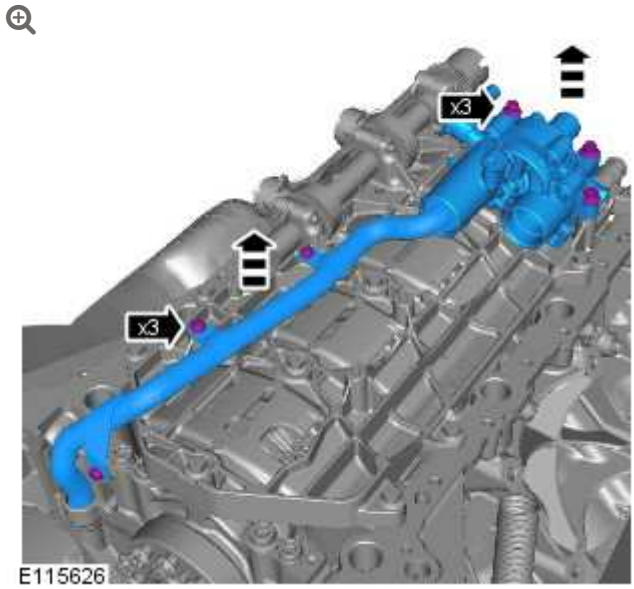

9.

NOTE:

Remove and discard the O-ring seal.

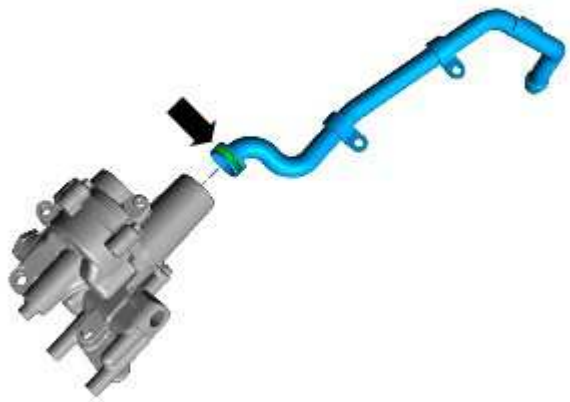

E139628

INSTALLATION

1.

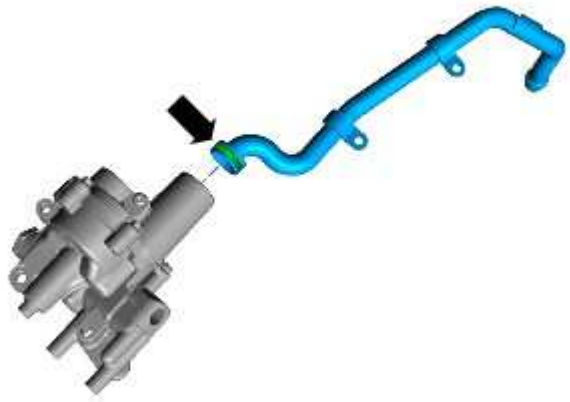

E139628

Lubricate and install the new O-ring seals.

2.

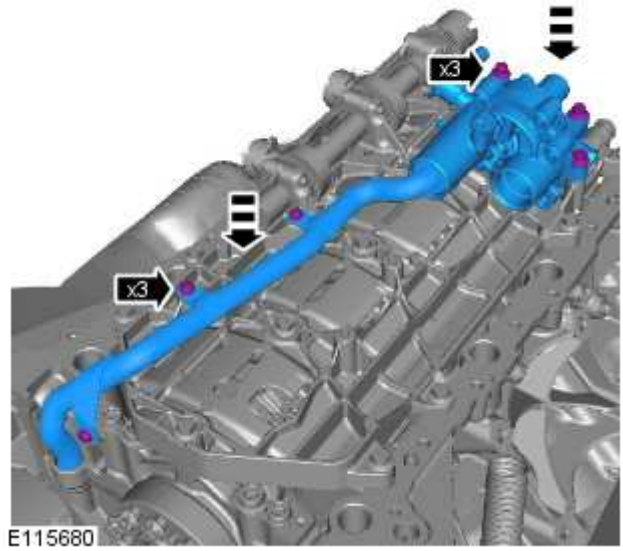

Torque:

M8 **25 Nm**

M6 **12 Nm**

3.

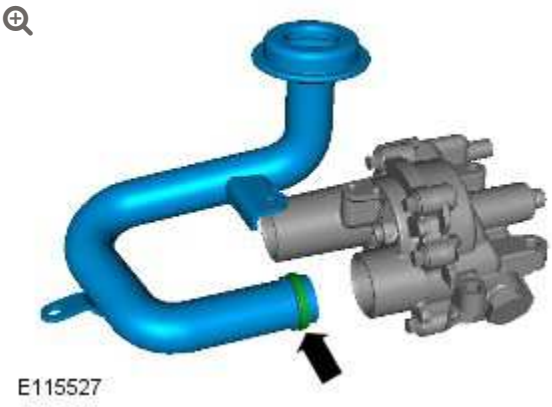

Lubricate and install a new O-ring seal.

4.

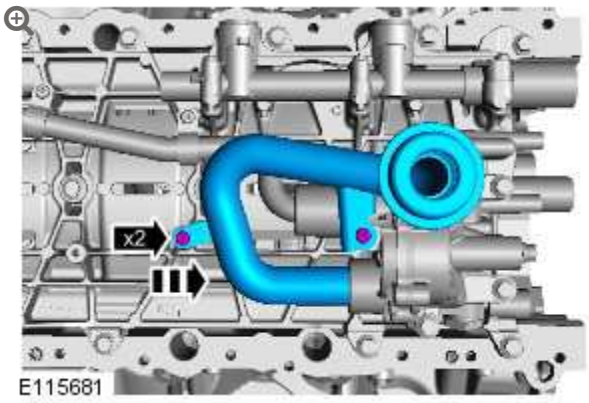

Torque: **12 Nm**

5.

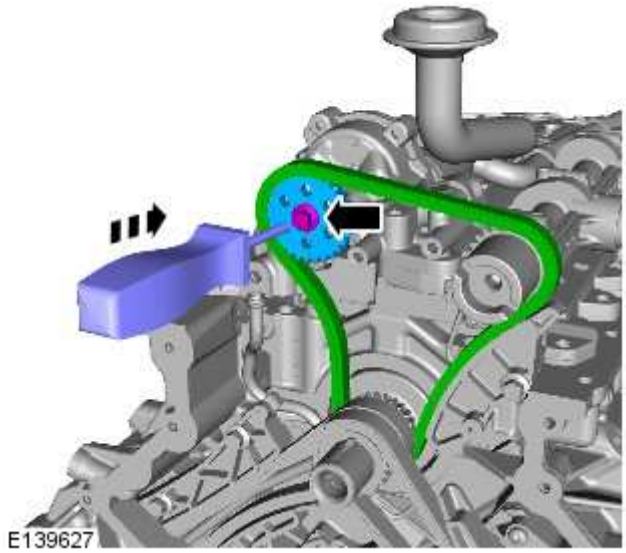

Torque: **21 Nm**

6.

NOTE:

Tsubaki timing drive only.

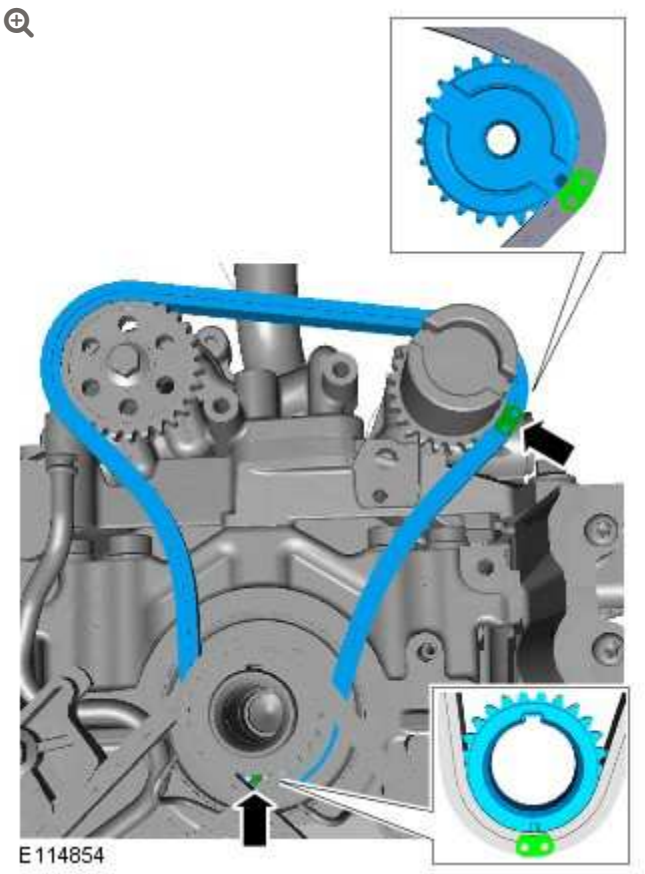

Install the lower timing chain making sure the coloured chain links align correctly with the fuel rail high-pressure fuel pumps camshaft and crankshaft sprocket markings.

7.

CAUTION:

Make sure that the tensioner spring is correctly located.

NOTE:

Tsubaki timing drive only.

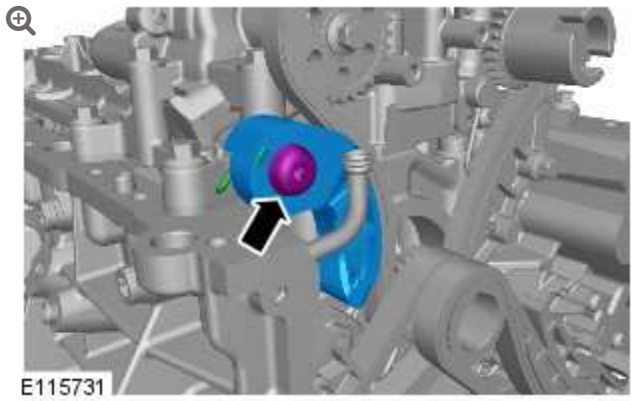

Torque: **21 Nm**

8.

NOTE:

INA timing drive only.

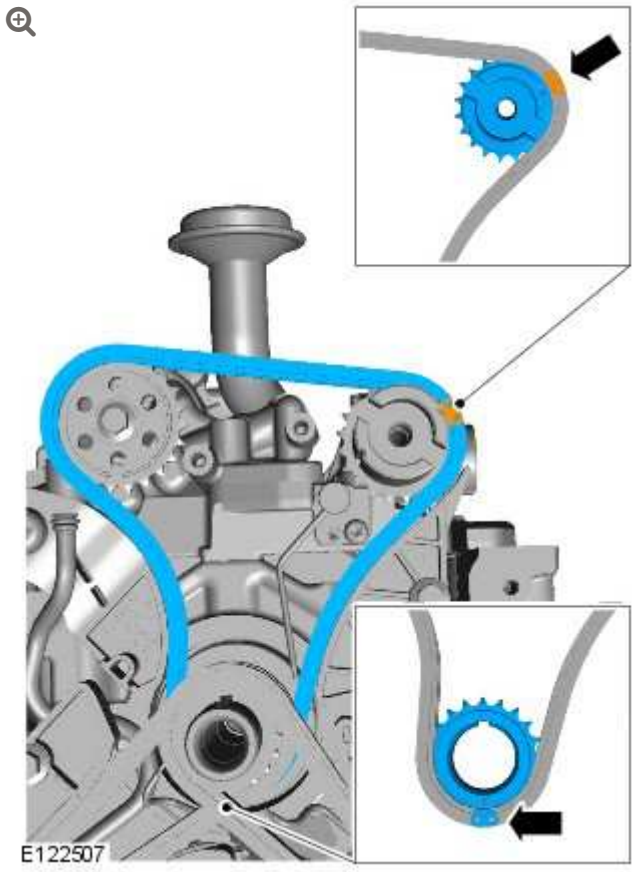

Install the lower timing chain making sure the coloured chain

links align correctly with the fuel rail high-pressure fuel pumps camshaft and crankshaft sprocket markings.

9. **CAUTION:**

> Make sure that the tensioner spring is correctly located.

NOTE:

> INA timing drive only.

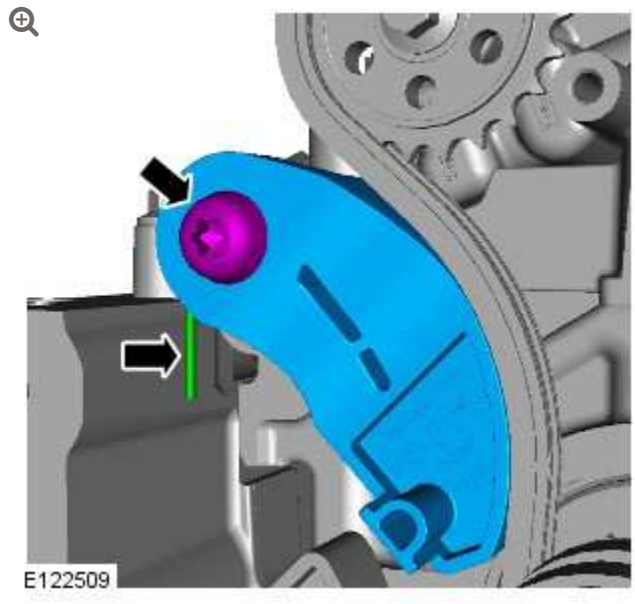

Torque: **21 Nm**

10. Refer to: Oil Pan Extension (303-01B Engine - V8 S/C 5.0L Petrol, Removal and Installation).

11. Connect the battery ground cable.
Refer to: Specifications (414-00, Specifications).

ENGINE – V8 S/C 5.0L PETROL

TIMING CHAIN TENSIONER – ENGINE SET (G1676892)

REMOVAL AND INSTALLATION

SPECIAL TOOL(S)



303-1447

Timing Tool

REMOVAL

WARNING:

This procedure involves fuel handling. Be prepared for fuel spillage at all times and always observe fuel handling precautions. Failure to follow these instructions may result in personal injury.

CAUTIONS:

- Check all timing components for wear and install new components if required.
- Make sure that all openings are sealed. Use new blanking caps.

NOTE:

Some variation in the illustrations may occur, but the essential information is always correct.

1. Refer to: Petrol and Petrol-Ethanol Fuel Systems Health and Safety Precautions (100-00 General Information, Description and Operation).

2. Refer to: Fuel System Pressure Release - V8 5.0L Petrol/V8 S/C 5.0L Petrol (310-00 Fuel System - General Information, General Procedures).

3. Disconnect the battery ground cable.
   Refer to: Specifications (414-00 Battery and Charging System - General Information, Specifications).

4.

WARNING:

Make sure to support the vehicle with axle stands.

Raise and support the vehicle.

5. Refer to: Air Cleaner Outlet Pipe T-Connector (303-12B Intake Air Distribution and Filtering - V8 S/C 5.0L Petrol, Removal and Installation).

6. **CAUTION:**

Be prepared to collect escaping coolant.

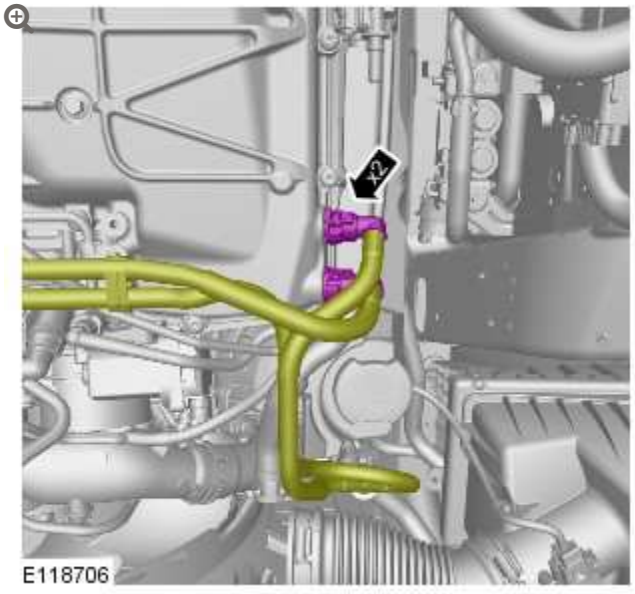

7.

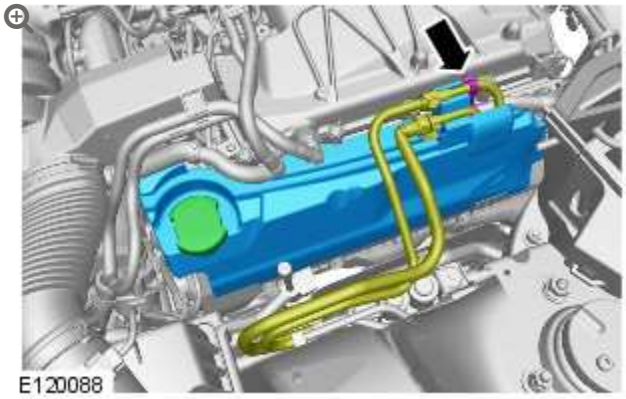

8.

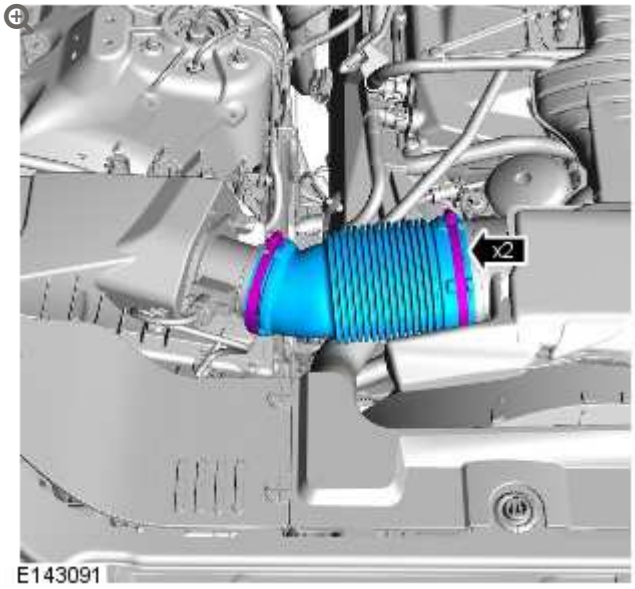

9.

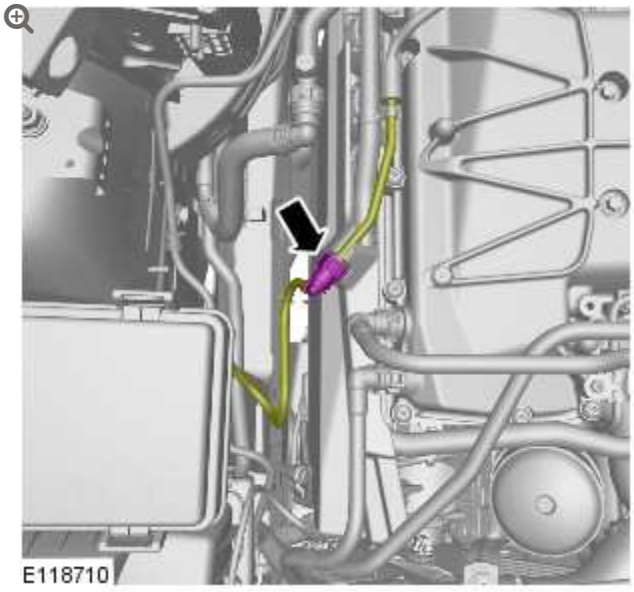

10.

CAUTION:

Be prepared to collect escaping coolant.

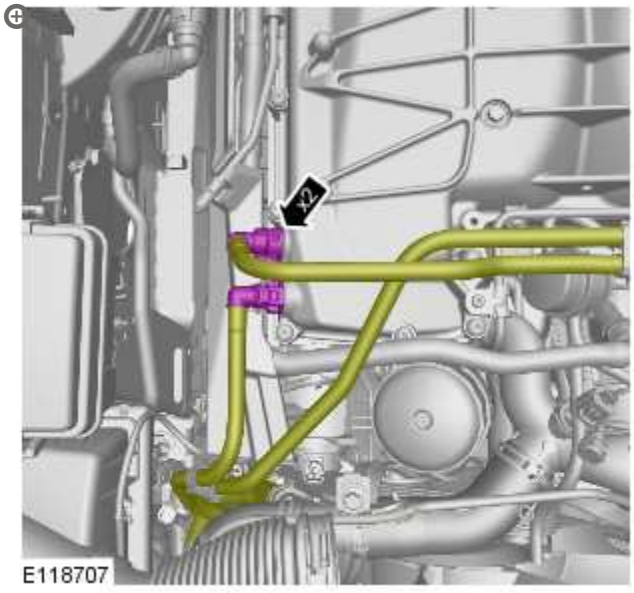

11.

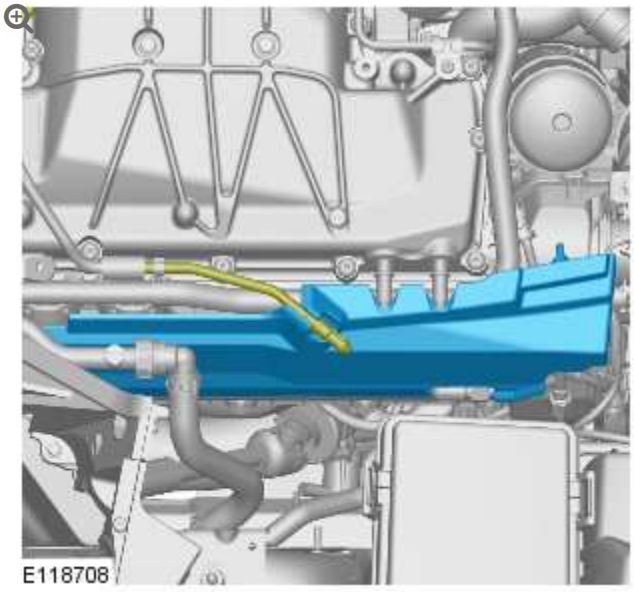

12.

WARNING:

Do not smoke or carry lighted tobacco or open flame of any type when working on or near any fuel related components. Highly flammable vapors are always present and may ignite. Failure to follow these instructions may result in personal injury.

CAUTIONS:

- Be prepared to collect escaping fuel.
- Make sure that all openings are sealed. Use new blanking caps.

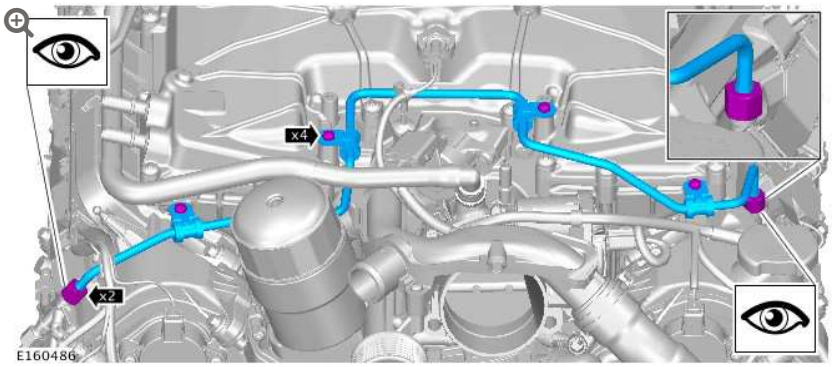

13.

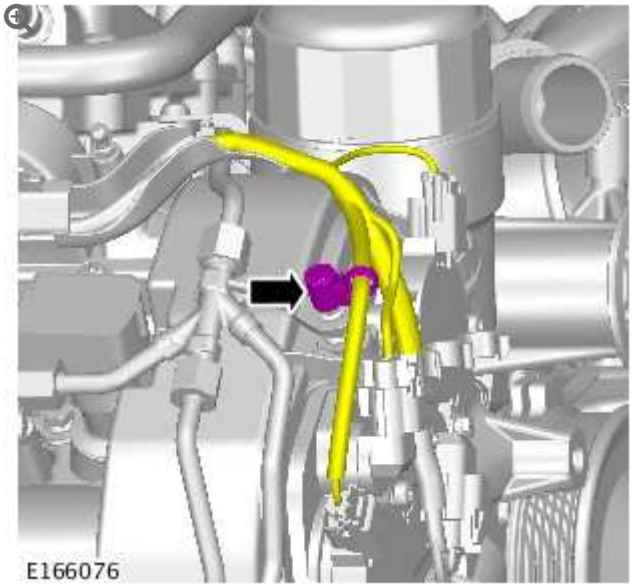

14.

CAUTIONS:

- Be prepared to collect escaping fuel.
- Make sure that all openings are sealed. Use new blanking caps.

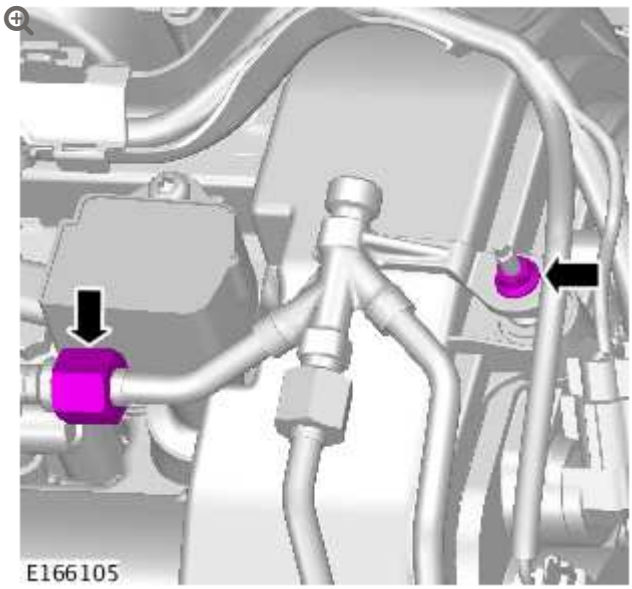

15. Refer to: Crankshaft Pulley (303-01A Engine - V8 5.0L Petrol, Removal and Installation).

16. **CAUTION:**

Using a suitable tool, lock the component.

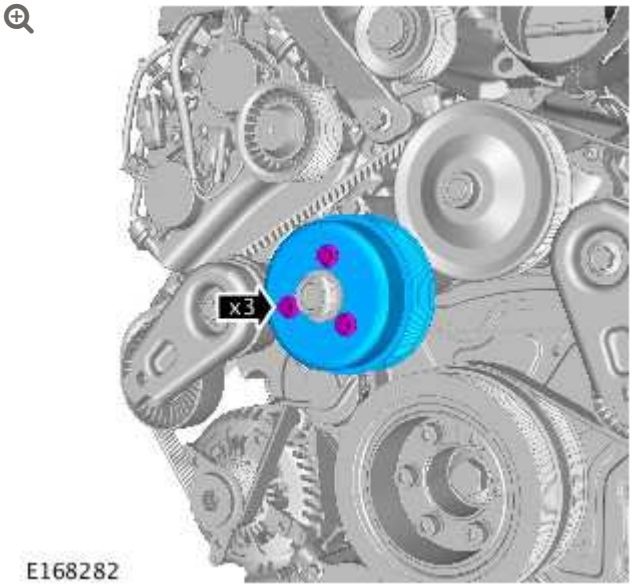

17.

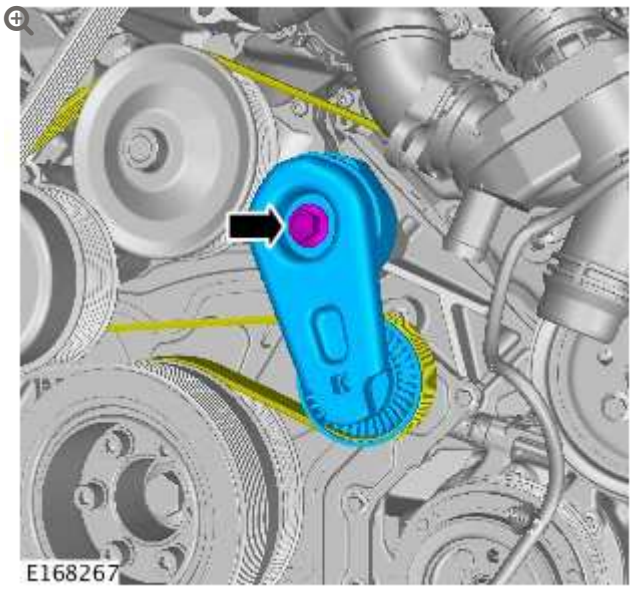

18.

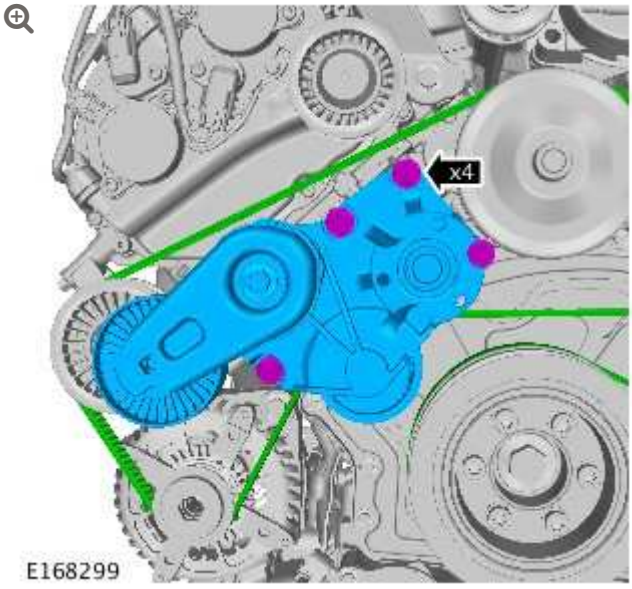

19. Remove the front right wheel and tire.

20. Refer to: Fender Splash Shield (501-02 Front End Body Panels, Removal and Installation).

21.

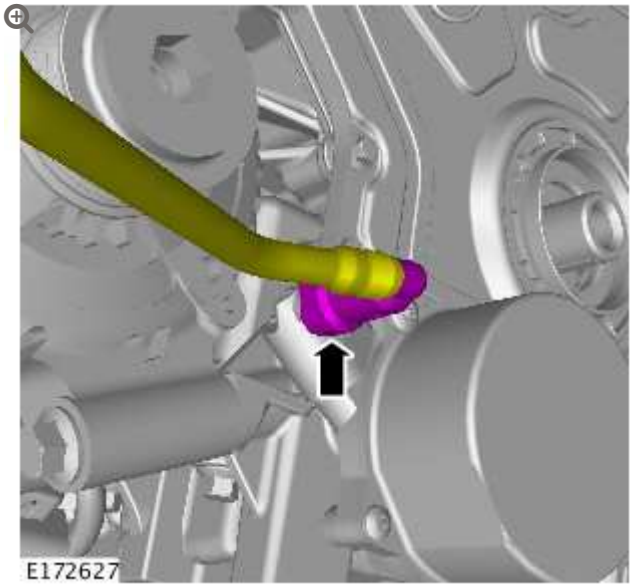

22.

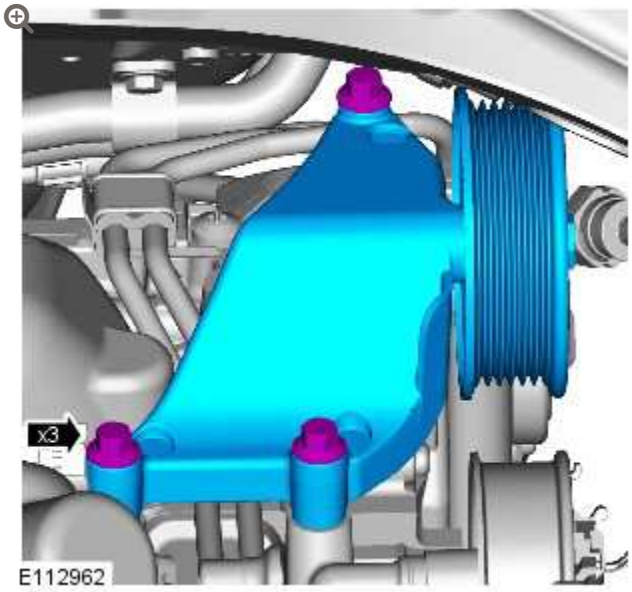

23.

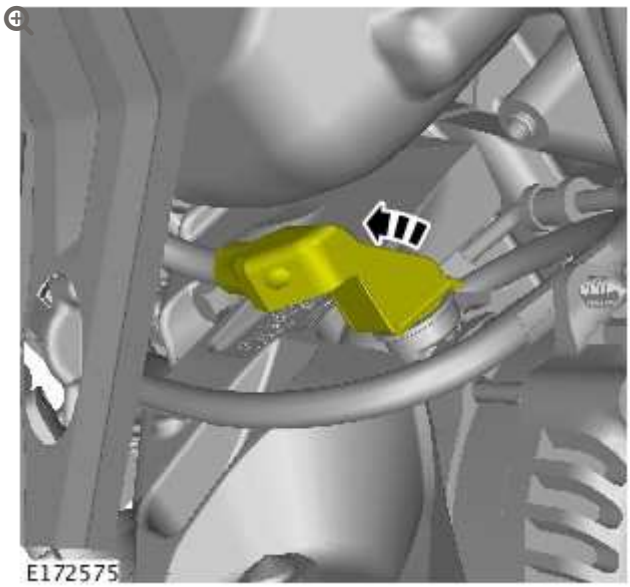

24.

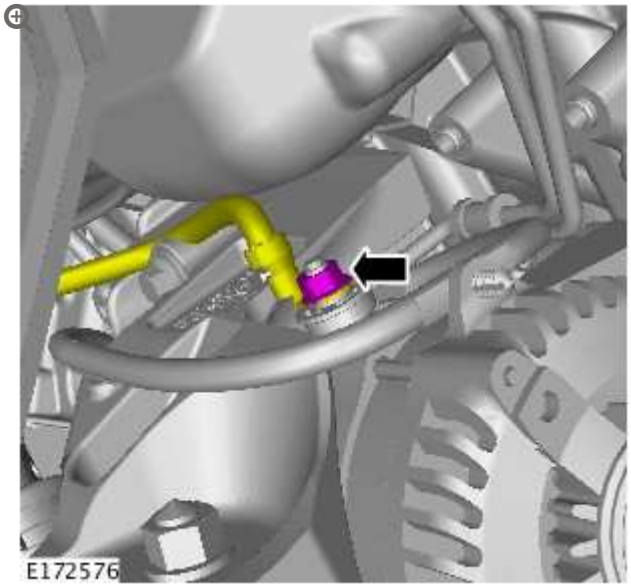

25.

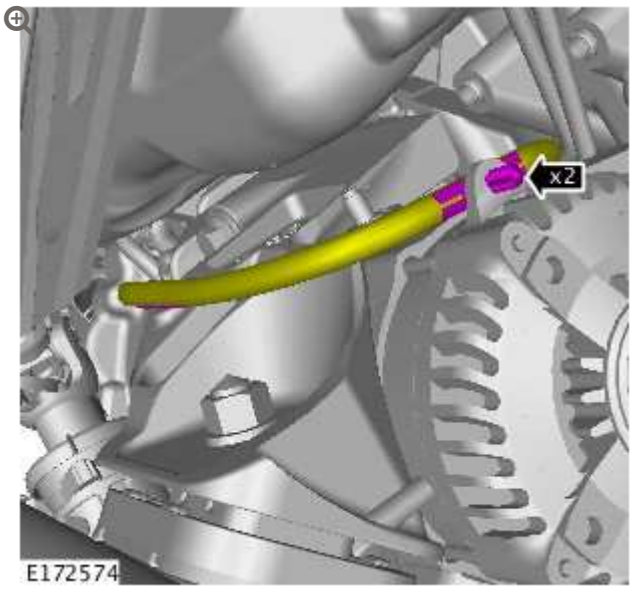

26.

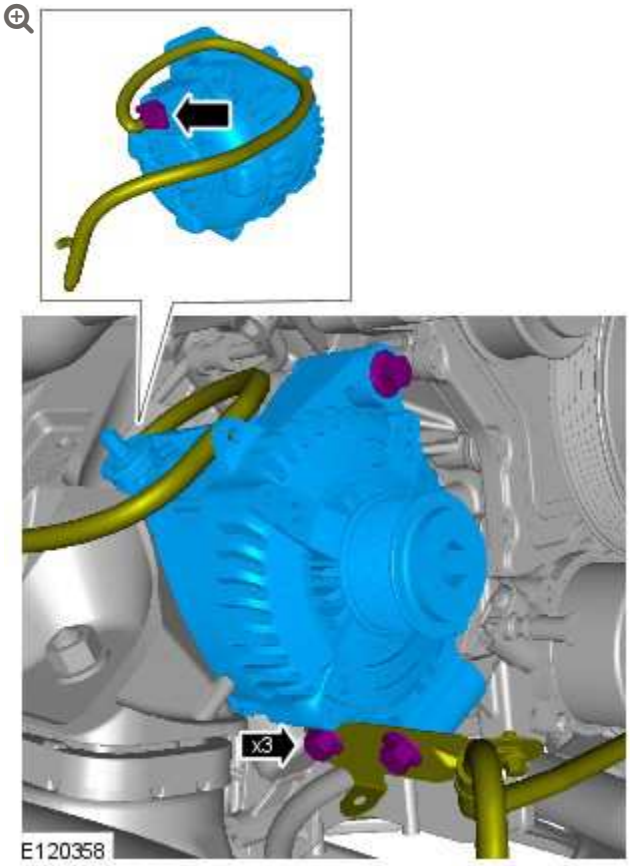

27.

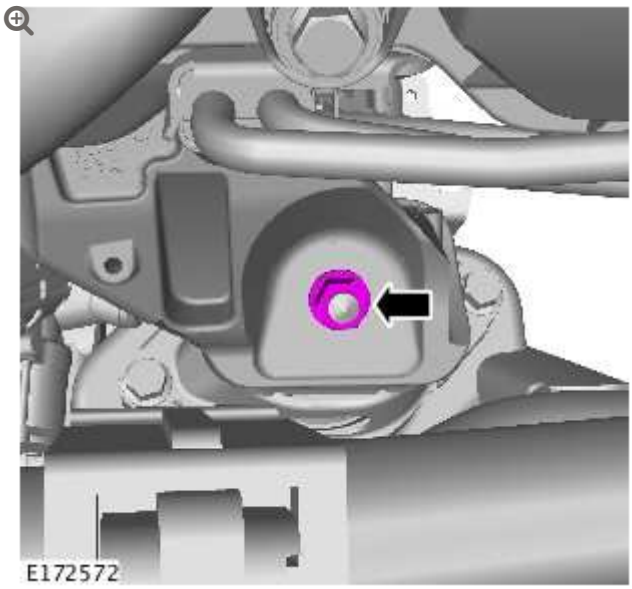

28.

CAUTION:

Use a wooden block to protect the oil pan when supporting the engine.

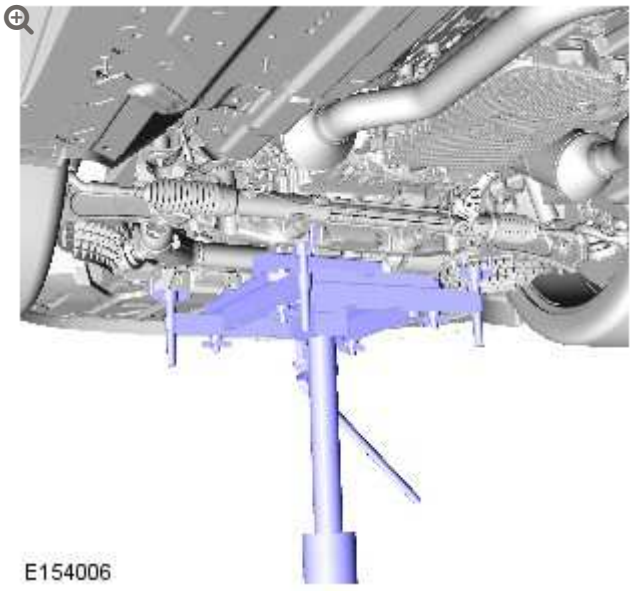

Using a suitable hydraulic jack, support the engine.

29.

NOTE:

Engine shown removed for clarity.

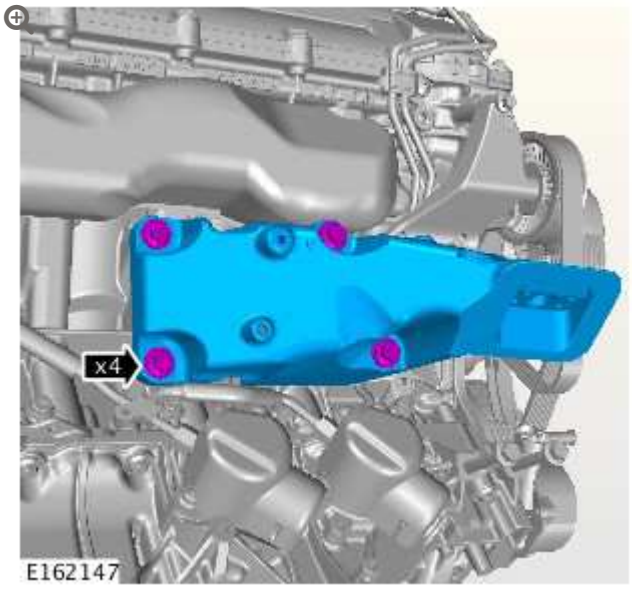

Remove the right side engine mounting bracket.

30.

CAUTIONS:

- Be prepared to collect escaping fuel.
- Make sure that all openings are sealed. Use new blanking caps.

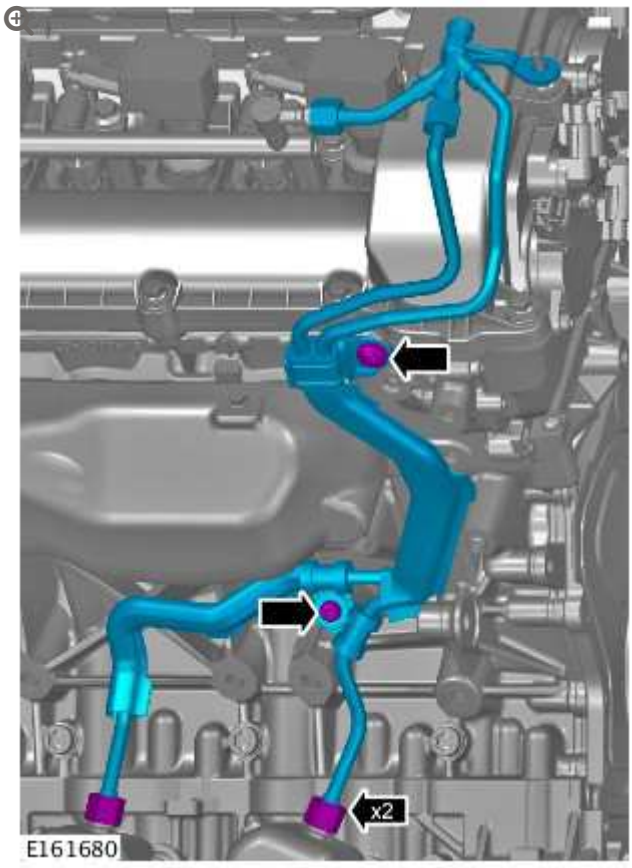

Remove and discard the high-pressure fuel supply lines.

31.

CAUTIONS:

- Install new high-pressure fuel supply lines.
- Do not fully install the component at this stage.
- Do not remove the blanking caps at this stage.

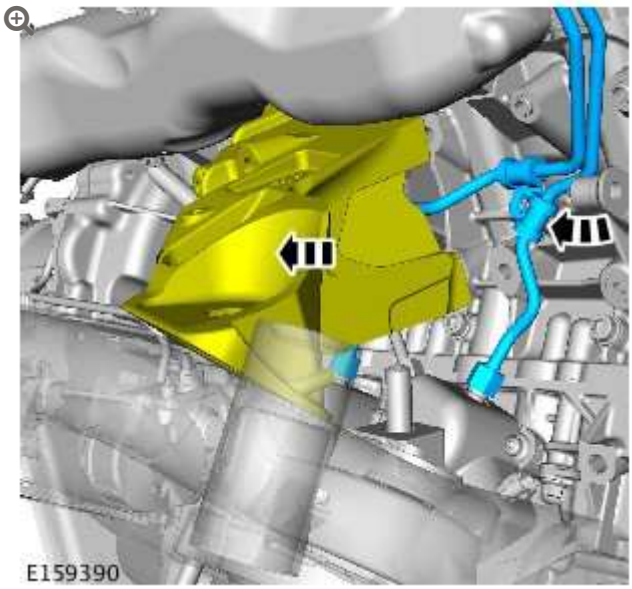

Install new high-pressure fuel supply lines. Loosely position the high pressure fuel pipes but do not tighten the unions at this stage.

32.

NOTE:

Engine shown removed for clarity.

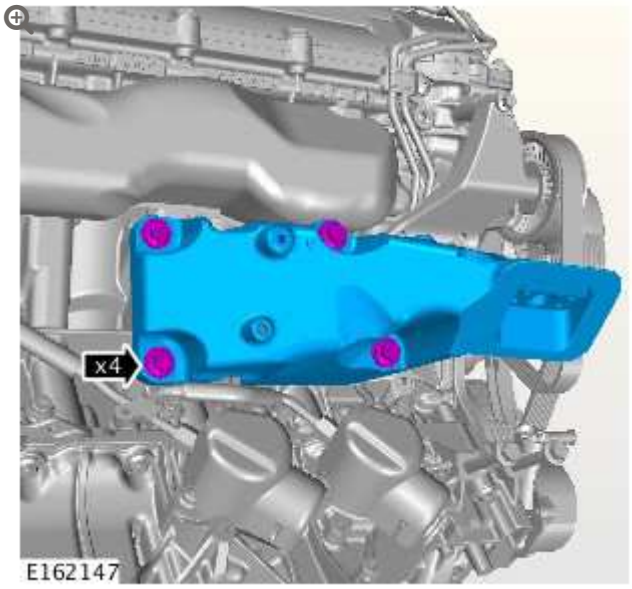

Install the right side engine mounting bracket.

Torque:

Stage 1: **45 Nm**

Stage 2: **60°**

33.

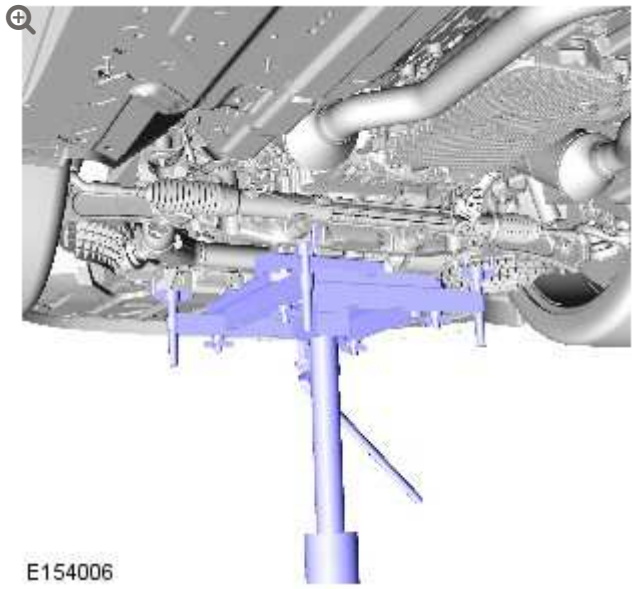

Remove the special tool.

34.

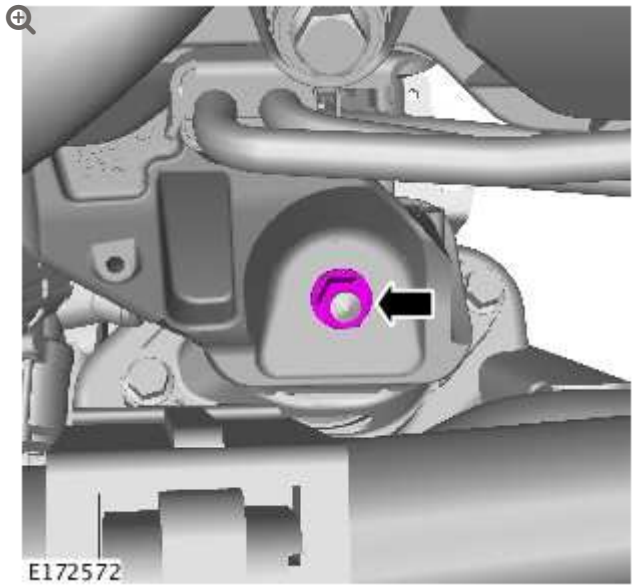

Torque: **110 Nm**

35.

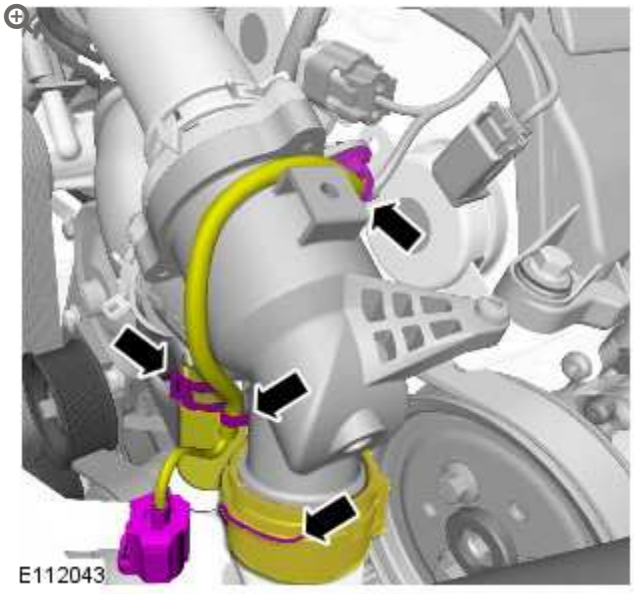

36.

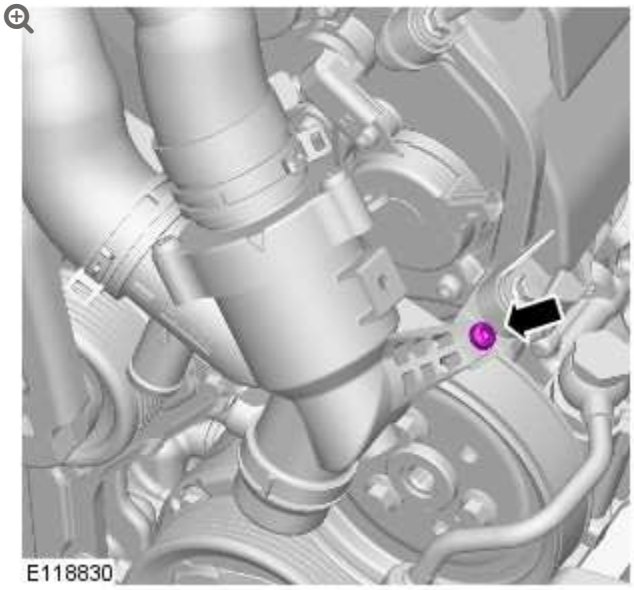

37.

NOTE:

Some variation in the illustrations may occur, but the essential information is always correct.

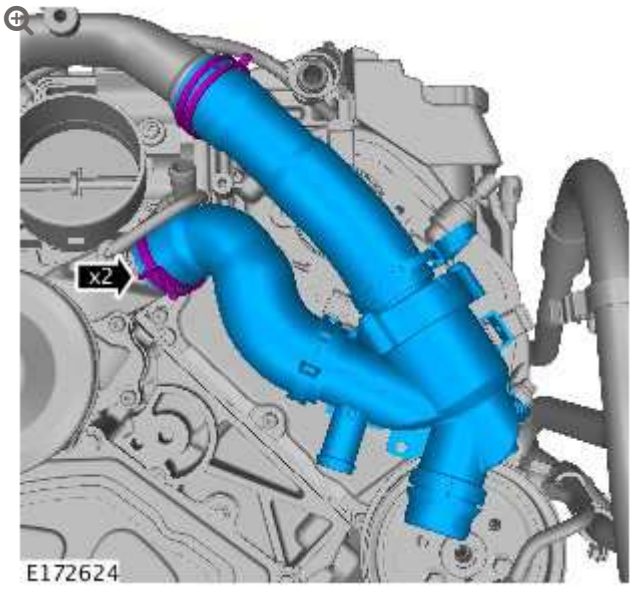

38.

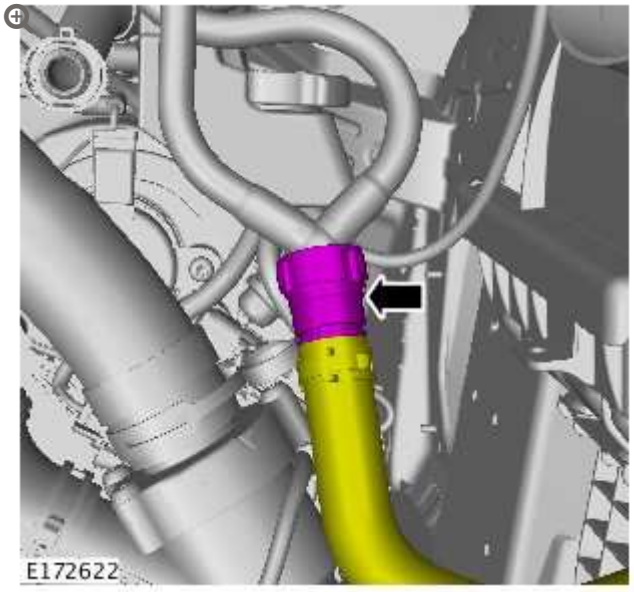

39.

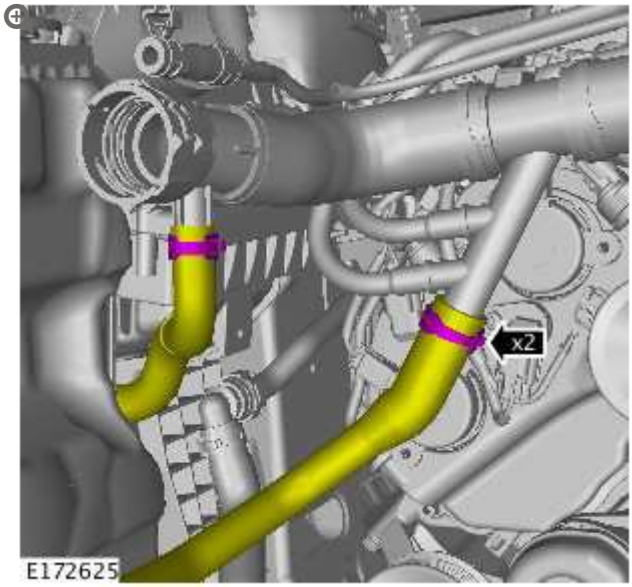

40.

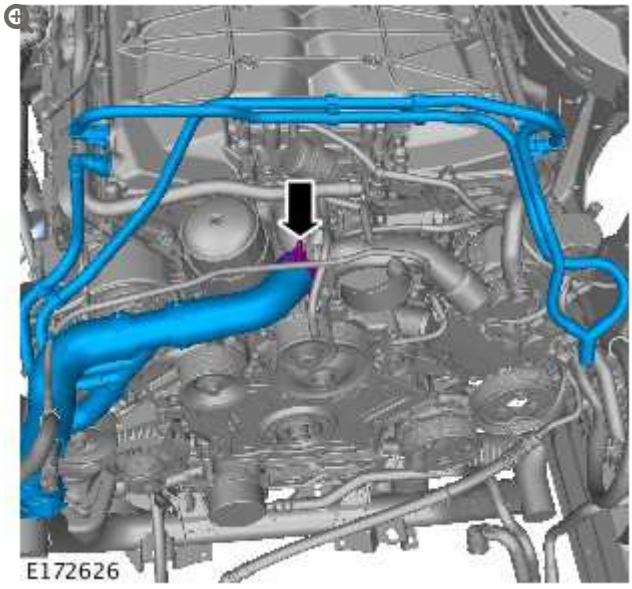

41.

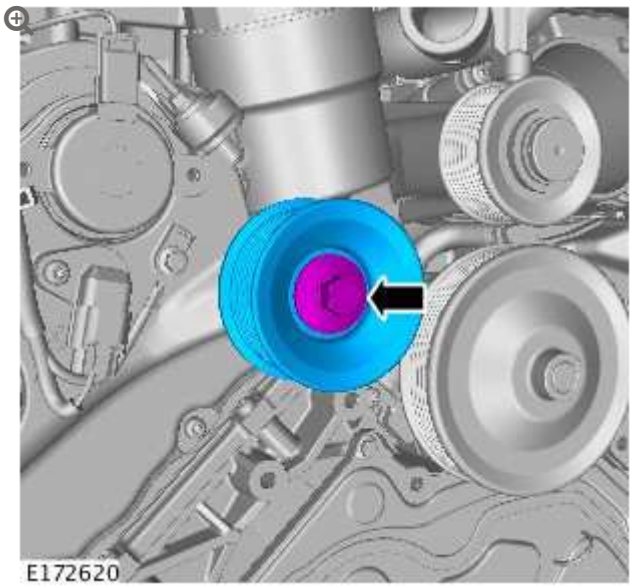

42.

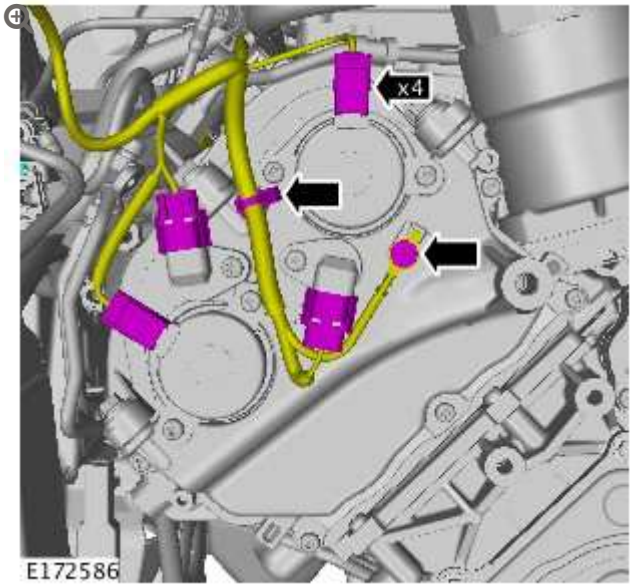

43.

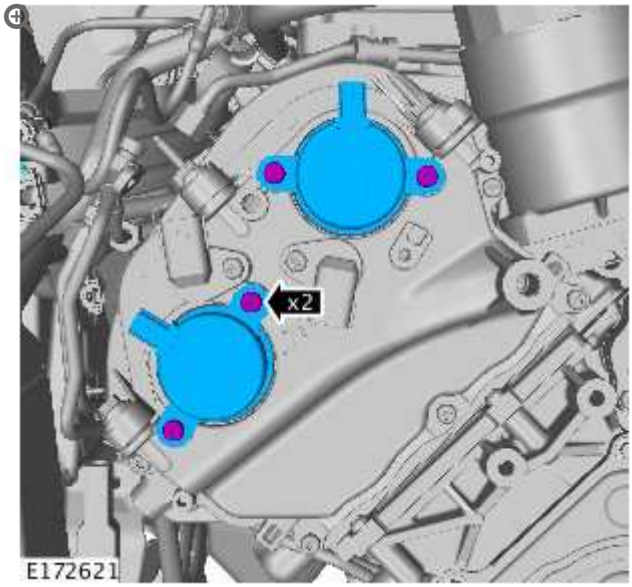

44.

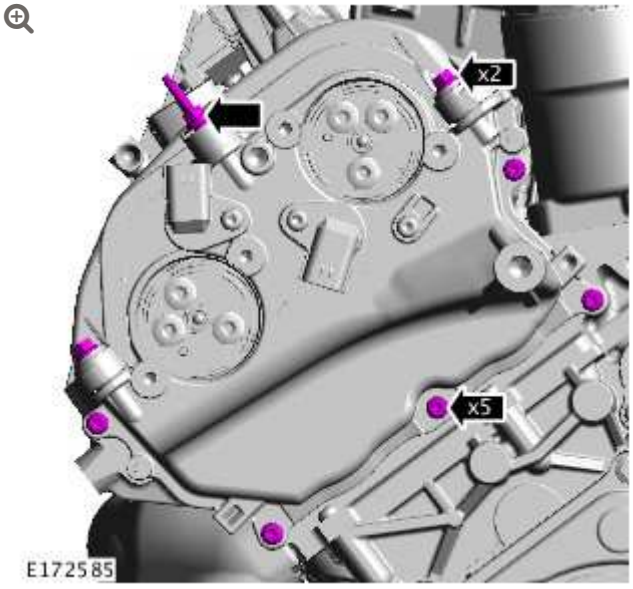

45.

CAUTION:

Take extra care not to damage the component.

NOTE:

Make sure to use the aluminium lug provided on the timing cover to lever against.

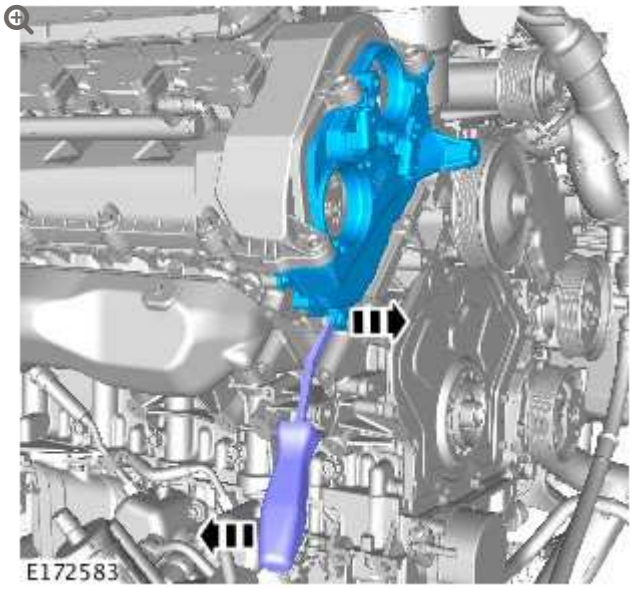

46.

CAUTION:

Using a suitable tool, lock the component.

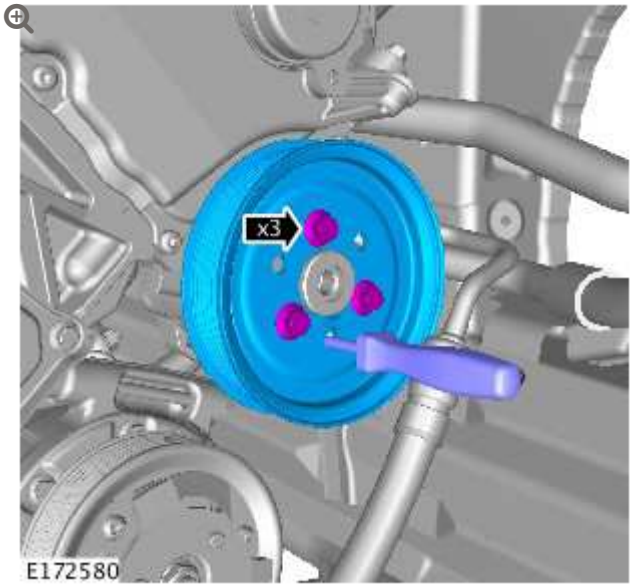

47.

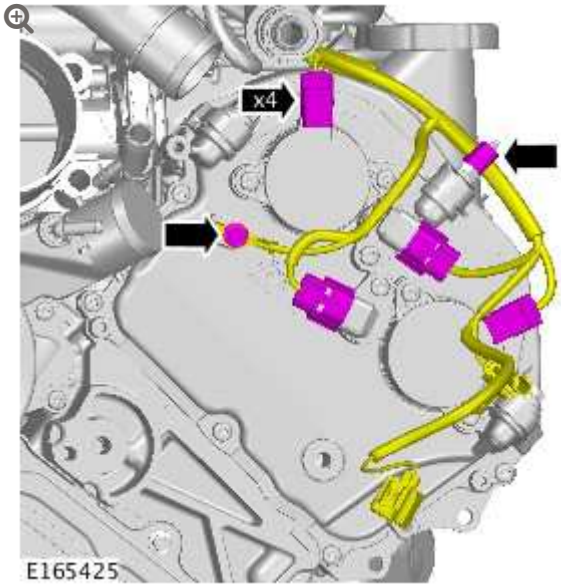

48.

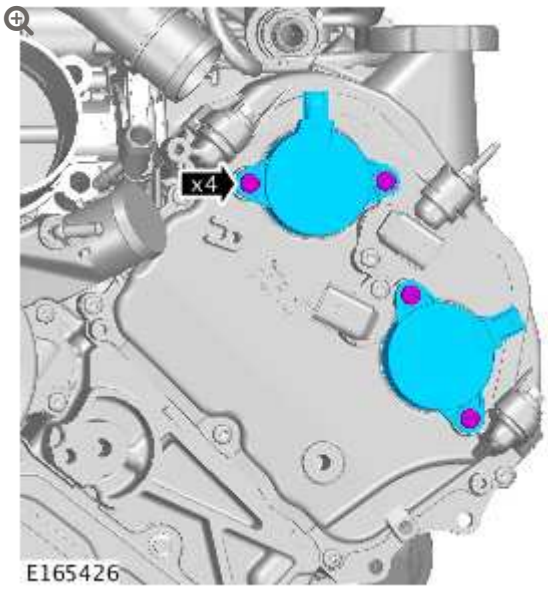

49.

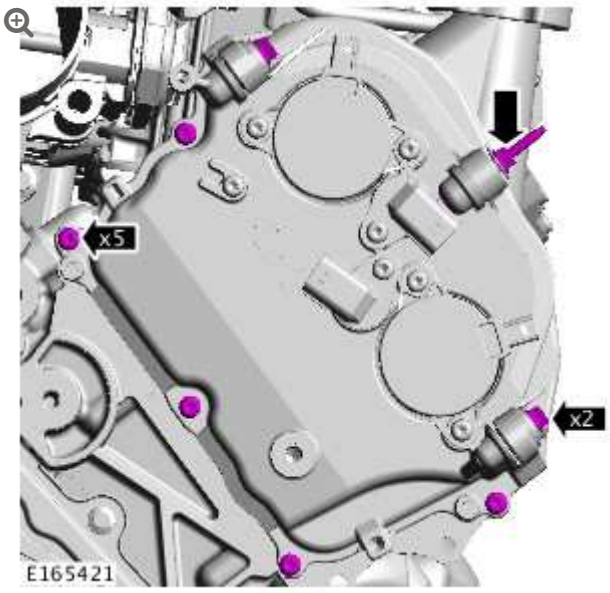

50.

CAUTION:

Take extra care not to damage the component.

NOTE:

Make sure to use the aluminium lug provided on the timing cover to lever against.

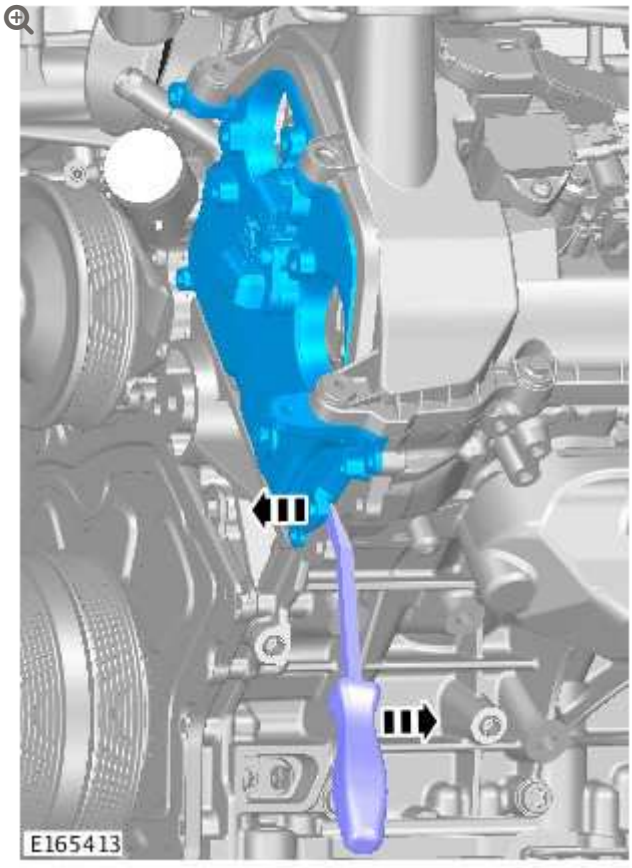

51.

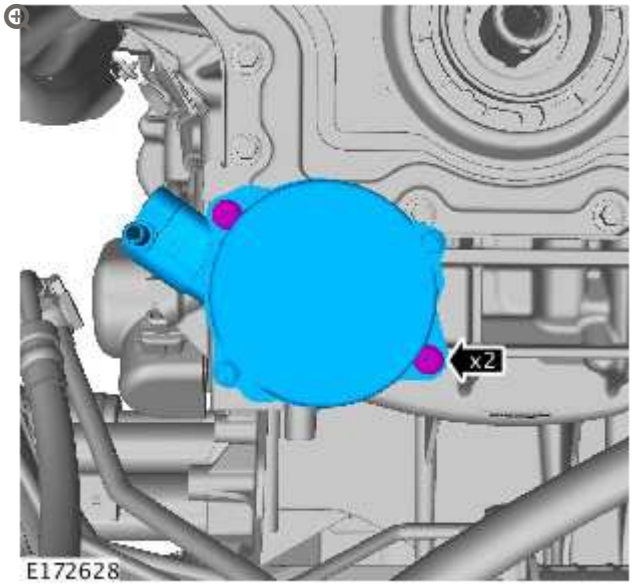

52.

CAUTION:

Discard the component.

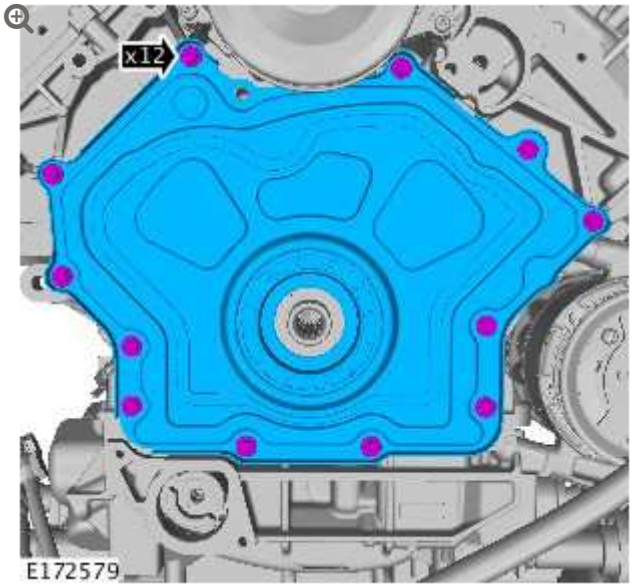

53.

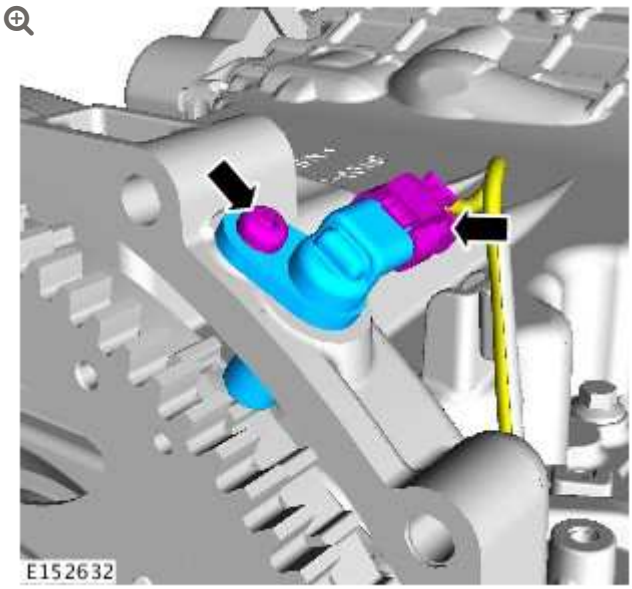

Remove the crankshaft position sensor.

54.

CAUTION:

Only rotate the crankshaft clockwise.

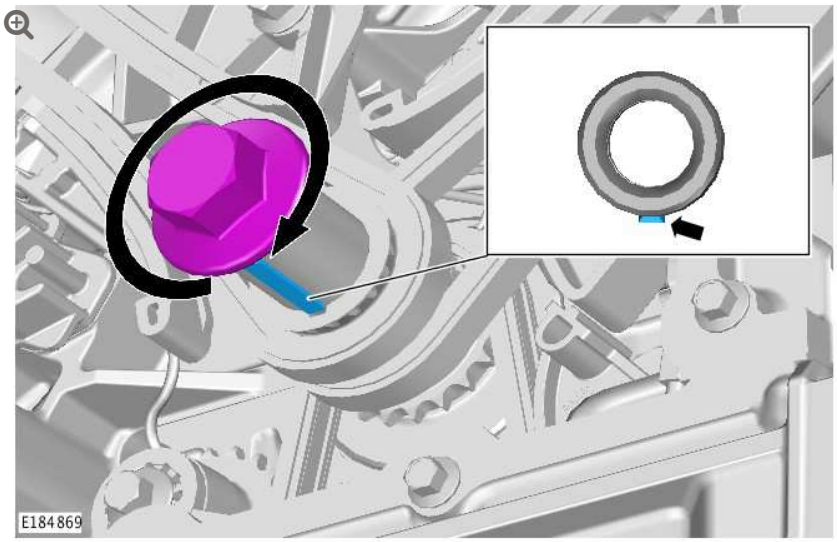

Rotate the crankshaft clockwise until the crankshaft keyway is positioned as indicated in the illustration.

55.

CAUTIONS:

- Only tighten the bolt finger-tight.
- Only rotate the crankshaft clockwise.

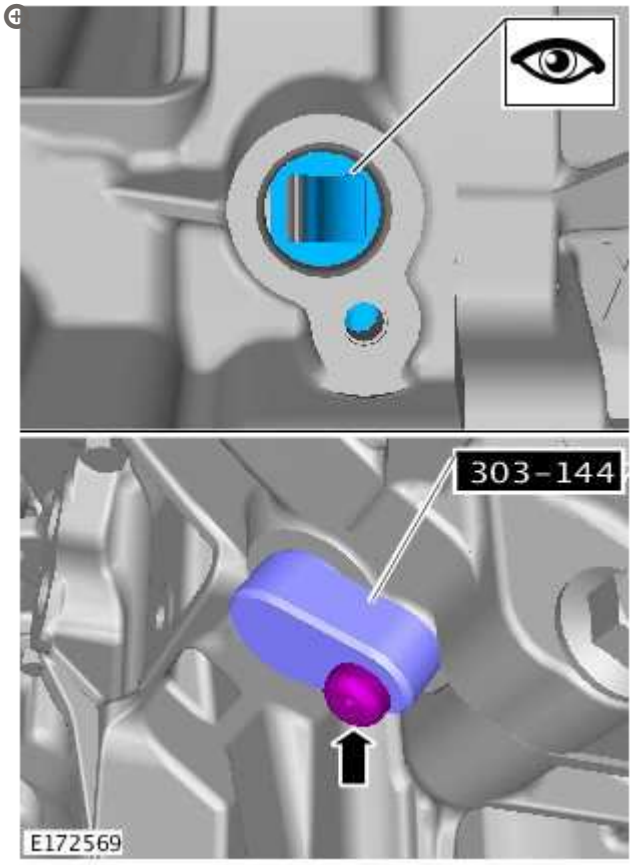

Make sure that the special tool is correctly located.

Special Tool(s): 303-1447

56. Remove the special tool.

57.

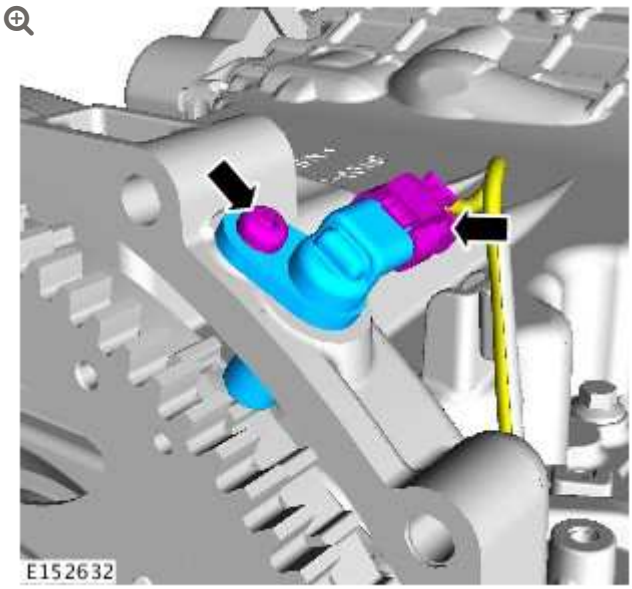

Install the crankshaft position sensor.

Torque: **10 Nm**

58.

CAUTION:

Only rotate the crankshaft clockwise.

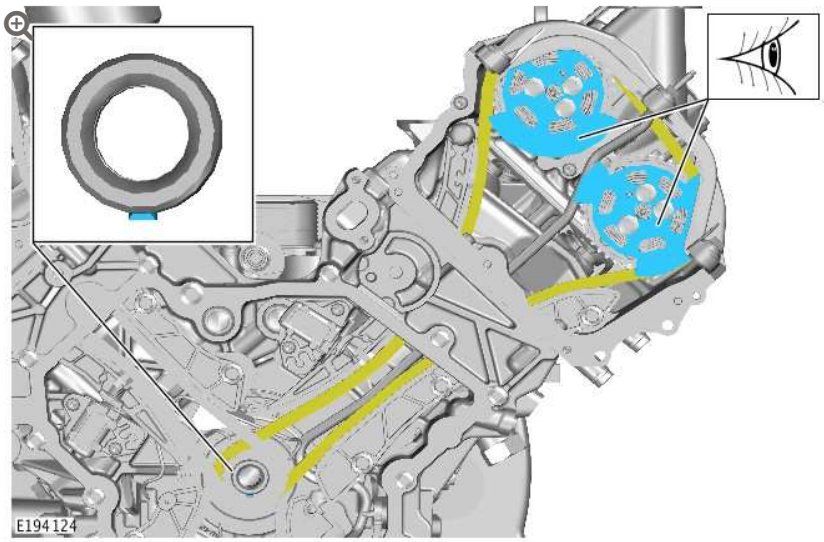

Check that the position of the Variable Valve Timing (VVT) unit and crankshaft keyway are positioned as indicated. If the VVT units are not positioned as indicated, rotate the

crankshaft clockwise until the correct crankshaft keyway and VVT unit positions are achieved.

59.

CAUTION:

Do not tension the tie strap at this stage.

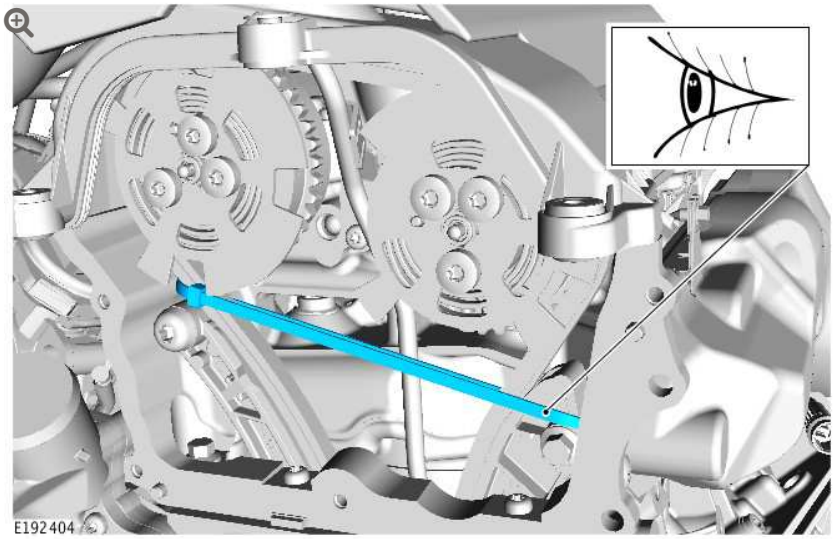

Loosely install the tie strap around the timing chain guide on the non-tensioned side and the timing chain on the tensioned side, as illustrated.

60.

CAUTIONS:

- Note the orientation of the tie strap in the illustration before applying tension.
- Make sure the tension is maintained on the timing chain.

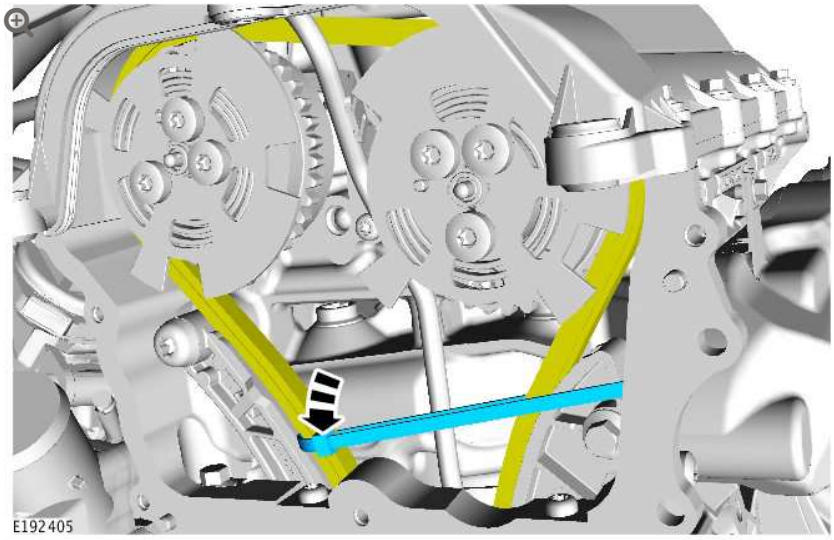

1. Carefully position the tie strap between the timing chain and the timing chain guide, as shown in the illustration.
2. Apply sufficient tension to the tie strap to limit the chain movement whilst the timing chain tensioner and timing chain guide are removed.

61.

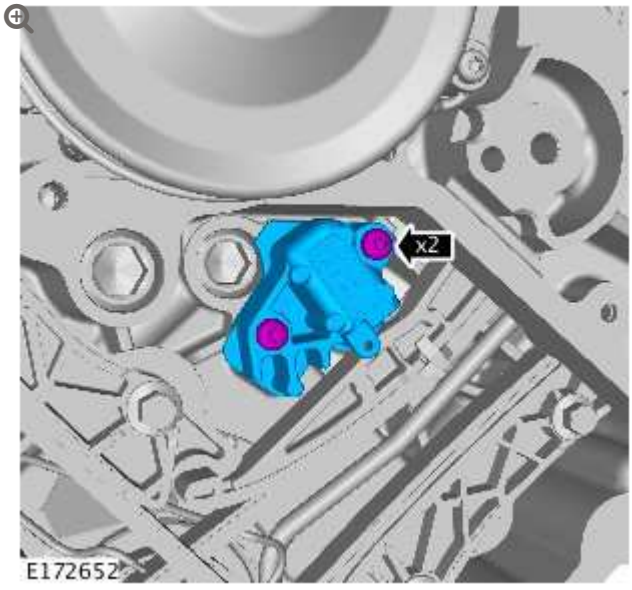

Remove the timing chain tensioner.

62.

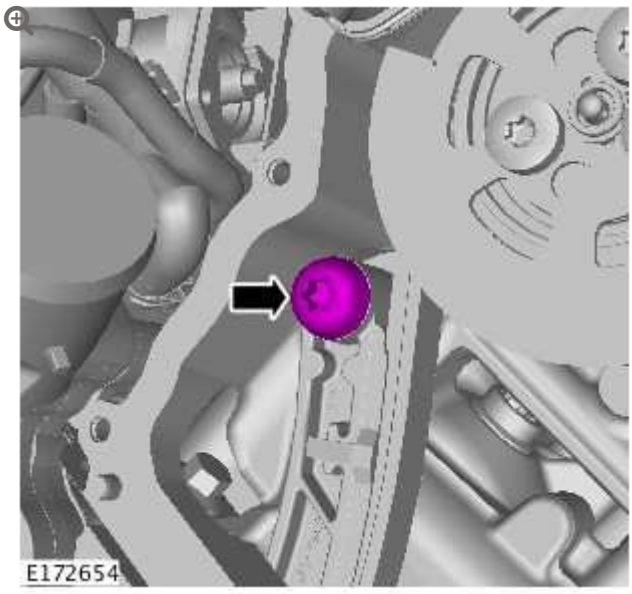

Remove the timing chain guide bolt.

63.

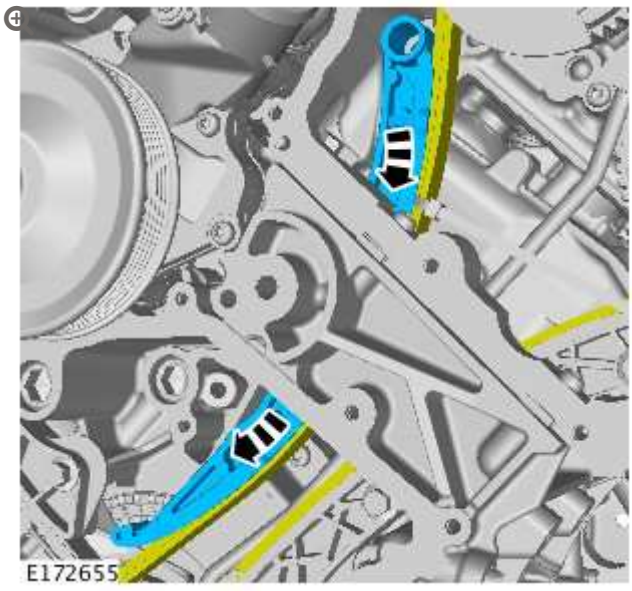

Remove the timing chain guide.

64.

CAUTIONS:

- If the vehicle is fitted with components shown in section 1 of the illustration, these must be replaced with components shown in section (2).
- Do not attempt to install the components shown in section 1 of the illustration, as damage to the engine may occur.

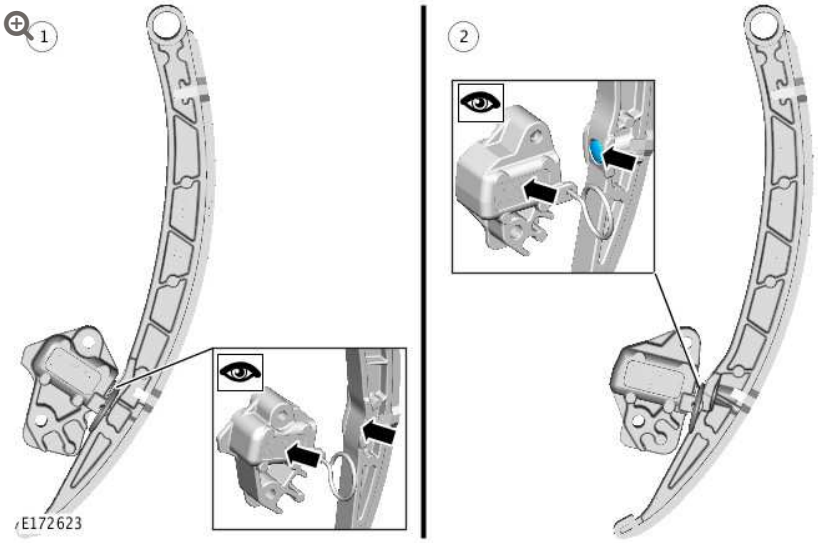

Using the illustration, identify which timing chain tensioner and guide is currently fitted to the vehicle. Make sure the vehicle is assembled using components shown in section (2) of the illustration only.

65.

CAUTION:

Make sure that a new component is installed.

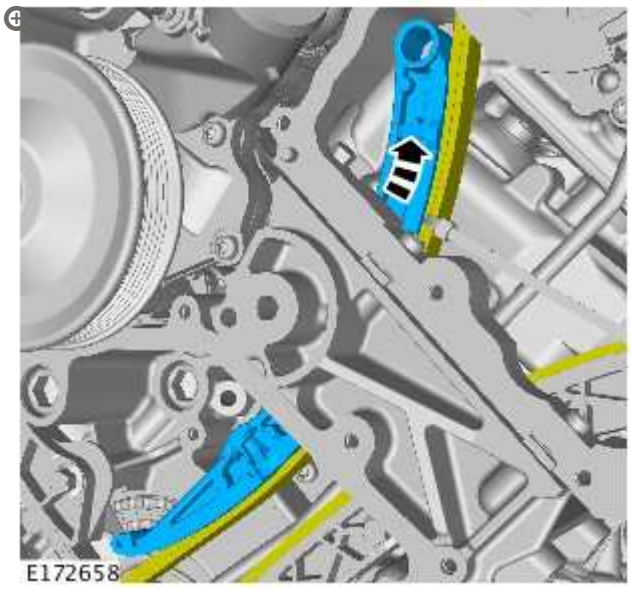

Install the timing chain guide.

66.

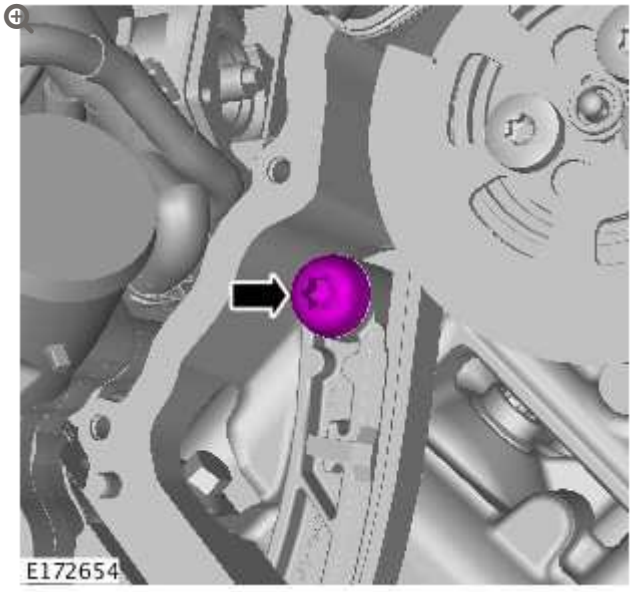

Install the timing chain guide bolt.

Torque: **25 Nm**

67.

CAUTIONS:

- If the vehicle is Installed with components shown in section 1 of the illustration, these must be replaced with components shown in section (2).
- Do not attempt to install the components shown in section 1 of the illustration, as damage to the engine may occur.

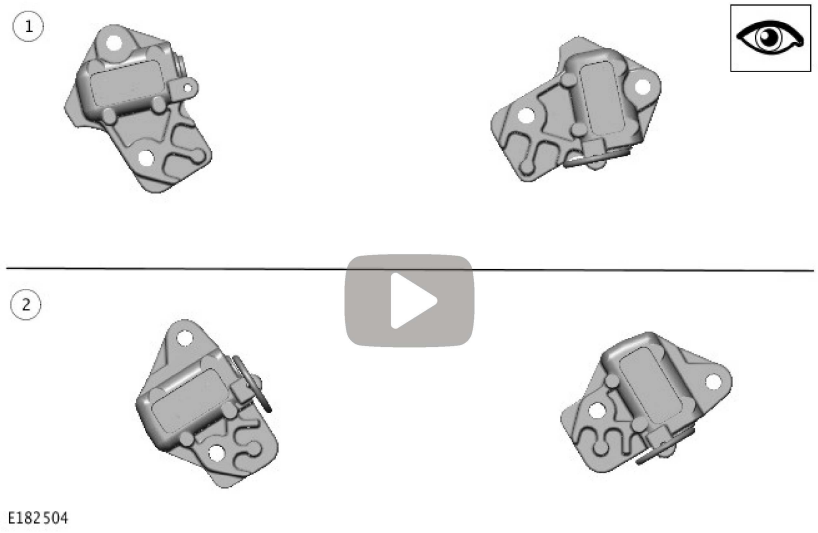

Before installing the timing chain tensioners, use the illustration shown to identify which timing chain tensioner is currently fitted to the vehicle. Make sure the vehicle is assembled using components shown in section (2) of the illustration only. If a new timing chain tensioner is installed, do not deploy the tensioner pin and proceed to the next step. If the tensioner to be installed has previously been deployed, make sure the attached animation is followed to make sure the tensioner is set correctly, failure to do this may result in damage to the engine.

CAUTION:

Do not release the timing chain tensioner locking pin at this stage.

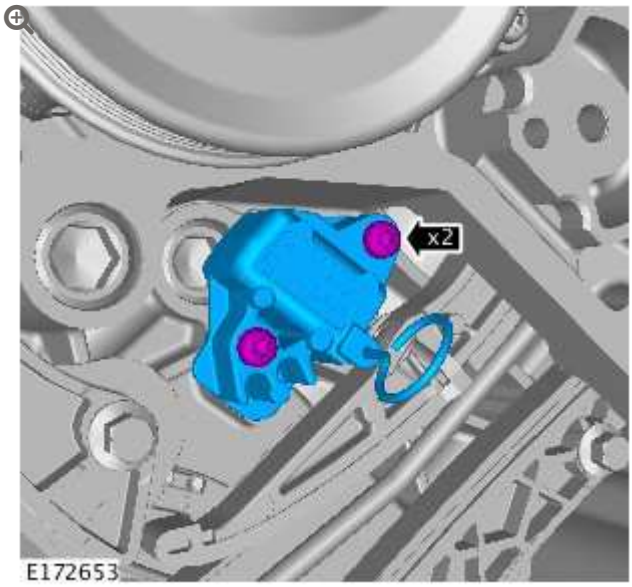

Install the timing chain tensioner.

Torque: **12 Nm**

69.

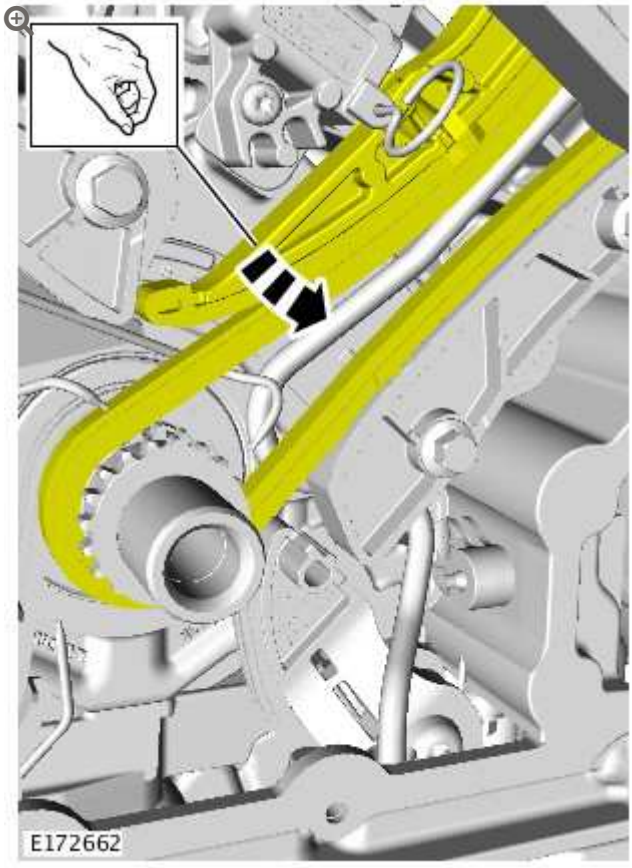

Apply and maintain tension on the component.

70.

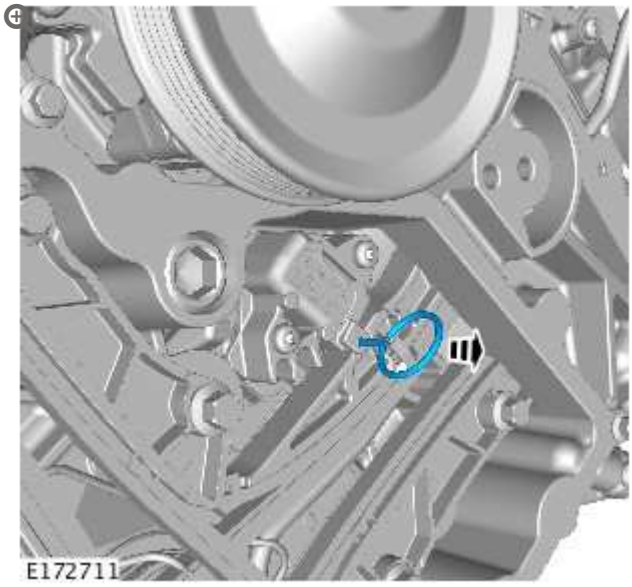

Remove the timing chain tensioner retaining pin and release the timing chain guide.

71.

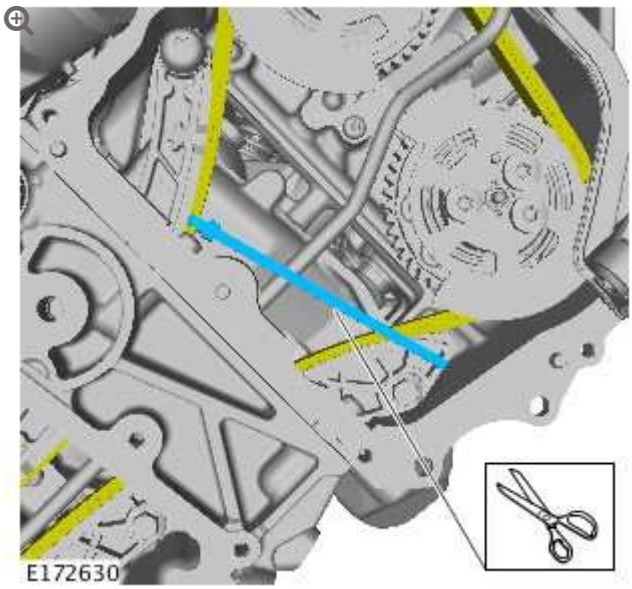

Remove and discard the tie strap.

72.

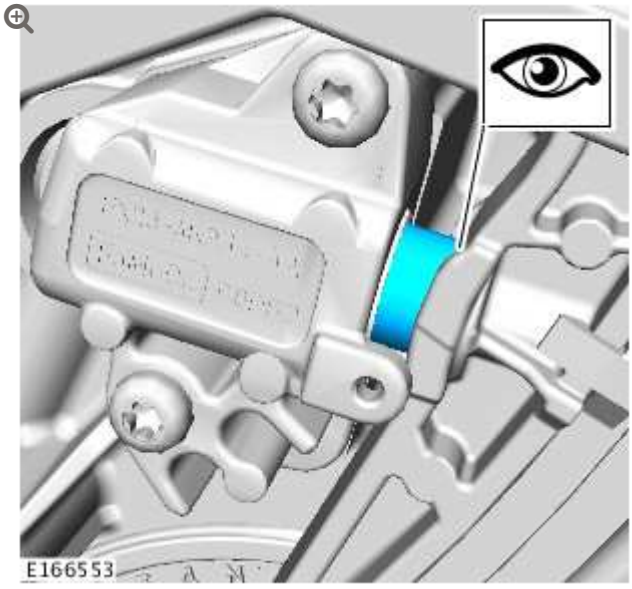

The piston should apply tension to the timing chain guide.

73.

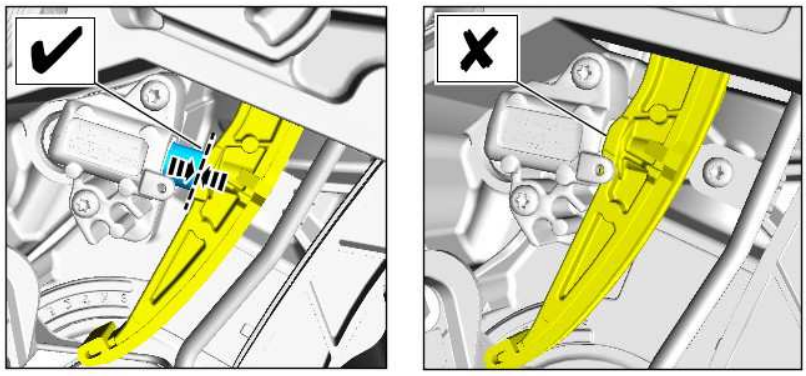

E166556

The timing chain tensioner must maintain tension on the chain guide. If the piston can be pushed back so the chain guide contacts with the body of the tensioner, the tensioner is not correct. Repeat steps 67-73.

74.

CAUTION:

Only rotate the crankshaft clockwise.

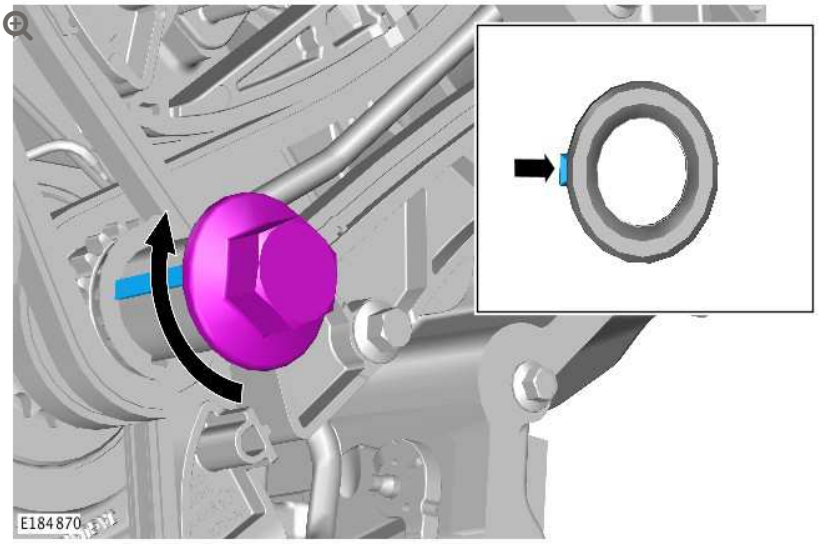

E184870

Rotate the crankshaft clockwise 90 degrees until the

crankshaft keyway is positioned as indicated in the illustration.

75.

CAUTION:

Only rotate the crankshaft clockwise.

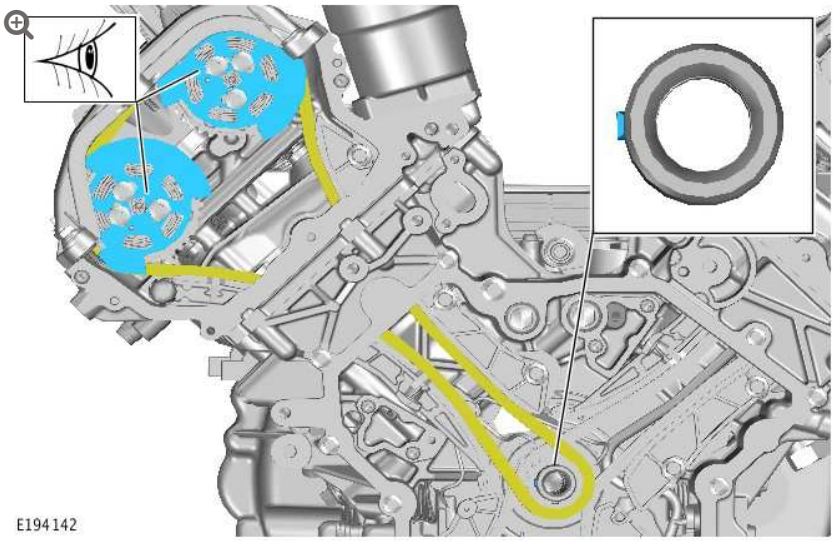

Check that the position of the Variable Valve Timing (VVT) unit and crankshaft keyway are positioned as indicated. If the VVT units are not positioned as indicated, rotate the crankshaft clockwise until the correct crankshaft keyway and VVT unit positions are achieved.

76.

CAUTION:

Do not tension the tie strap at this stage.

NOTE:

Right side.

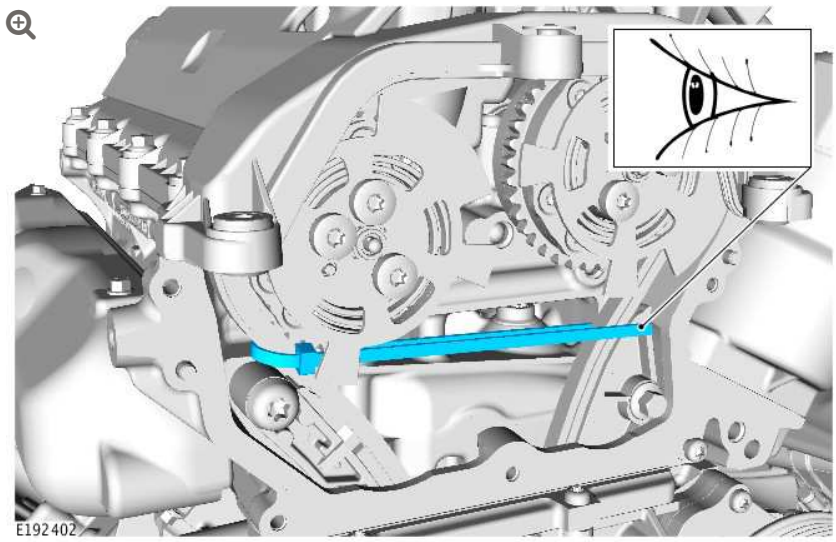

Loosely install the tie strap around the timing chain guide on the non-tensioned side and the timing chain on the tensioned side, as illustrated.

77.

CAUTIONS:

- Note the orientation of the tie strap in the illustration before applying tension.
- Make sure the tension is maintained on the timing chain.

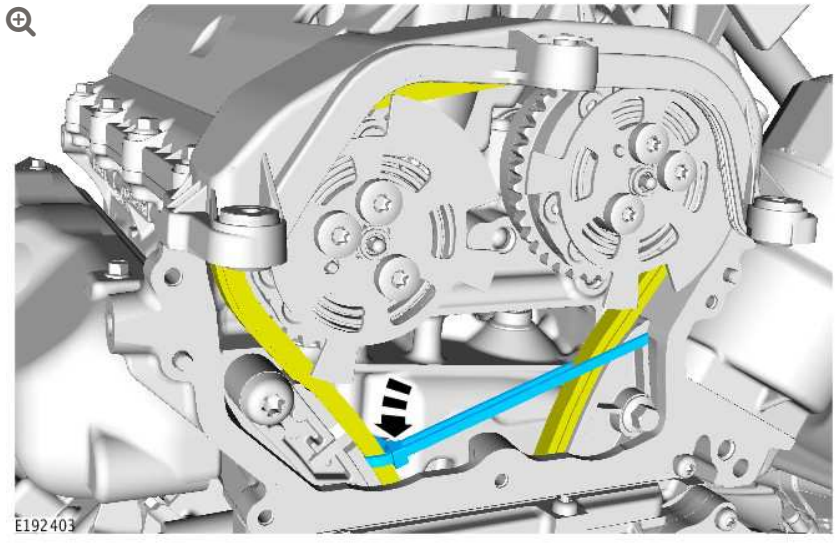

1. Carefully manipulate the tie strap between the timing chain and the timing chain guide, to the position illustrated.
2. Apply sufficient tension to the tie strap; allowing the timing chain to remain under tension, whilst the timing chain tensioner and timing chain guide are removed.

78.



Remove the timing chain tensioner.

79.

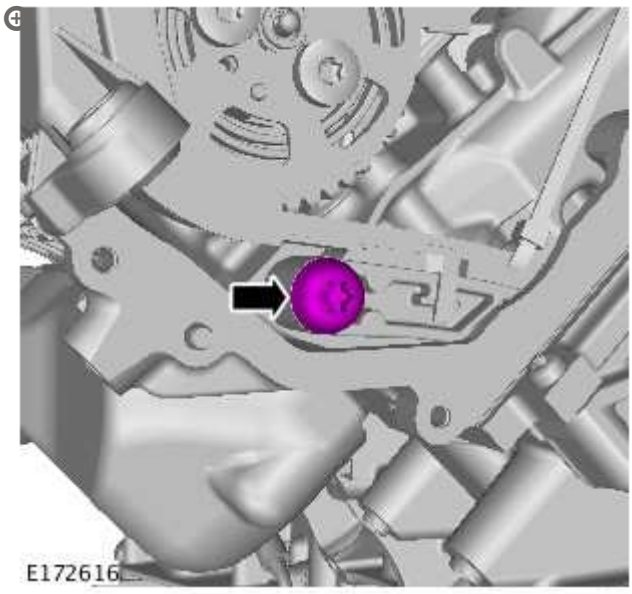

Remove the timng chain guide bolt.

80.

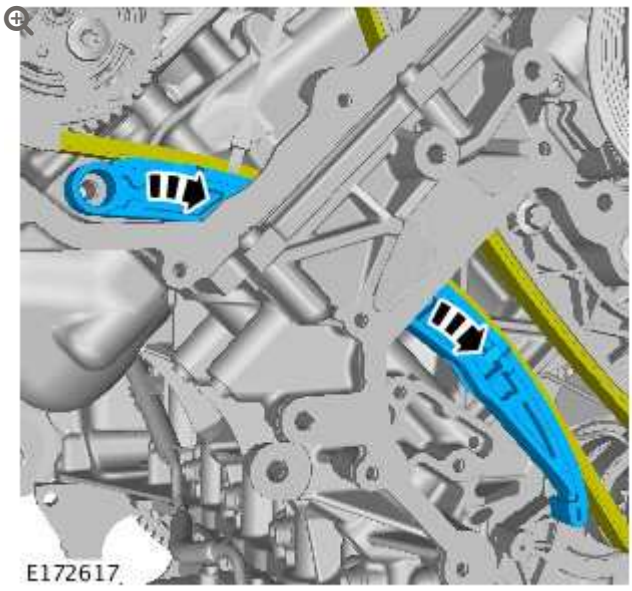

Remove the timing chain guide.

81.

CAUTIONS:

- If the vehicle is fitted with components shown in section 1 of the illustration, these must be replaced with components shown in section (2).
- Do not attempt to install the components shown in section 1 of the illustration, as damage to the engine may occur.

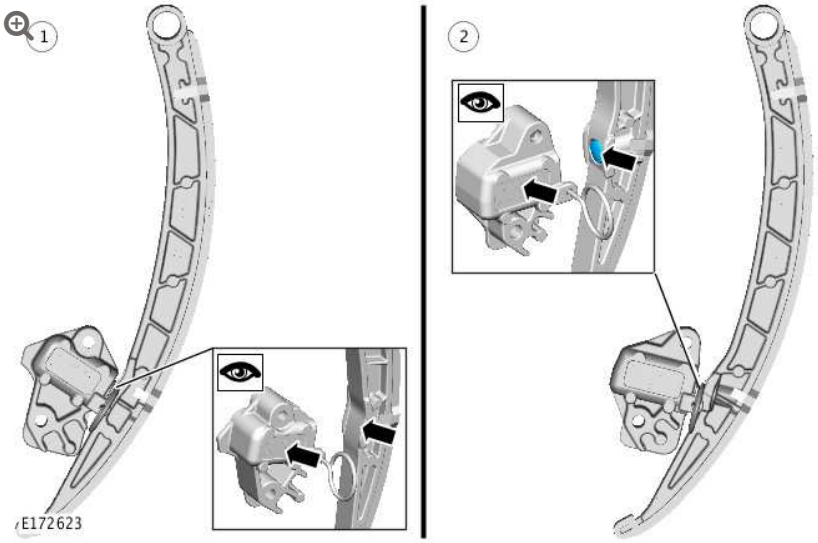

Using the illustration, identify which timing chain tensioner and guide is currently fitted to the vehicle. Make sure the vehicle is assembled using components shown in section (2) of the illustration only.

82.

CAUTION:

Make sure that a new component is installed.

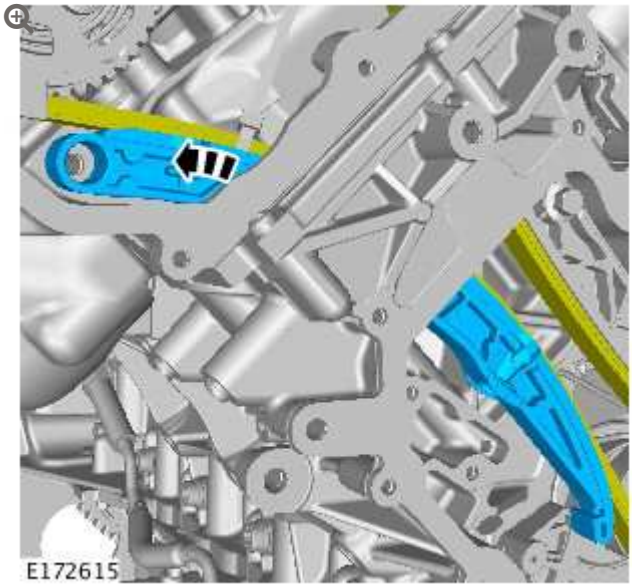

Install the timing chain guide.

83.

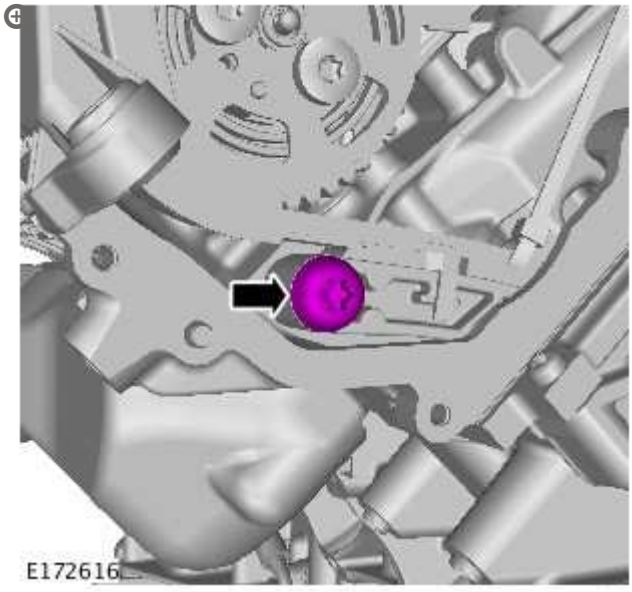

Install the timing chain guide bolt.

Torque: **25 Nm**

84.

CAUTIONS:

- If the vehicle is Installed with components shown in section 1 of the illustration, these must be replaced with components shown in section (2).
- Do not attempt to install the components shown in section 1 of the illustration, as damage to the engine may occur.

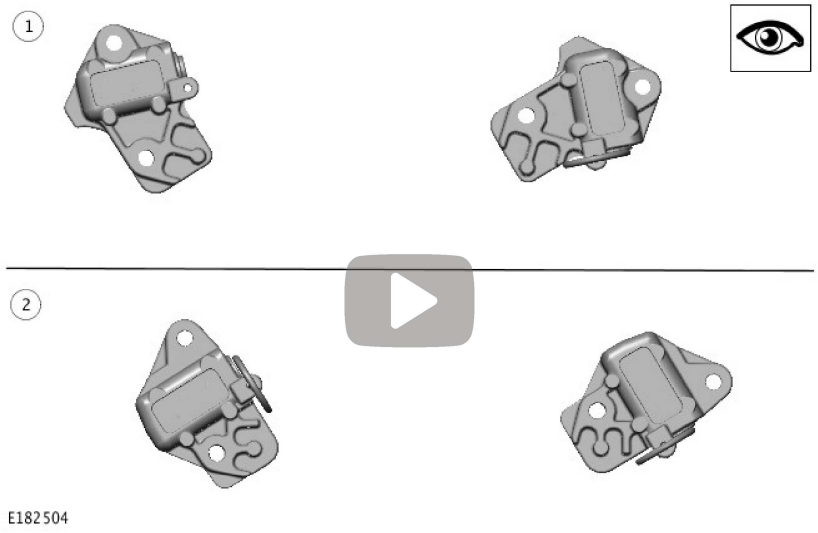

Before installing the timing chain tensioners, use the illustration shown to identify which timing chain tensioner is currently fitted to the vehicle. Make sure the vehicle is assembled using components shown in section (2) of the illustration only. If a new timing chain tensioner is installed, do not deploy the tensioner pin and proceed to the next step. If the tensioner to be installed has previously been deployed, make sure the attached animation is followed to make sure the tensioner is set correctly, failure to do this may result in damage to the engine.

CAUTION:

Do not release the timing chain tensioner locking pin at this stage.

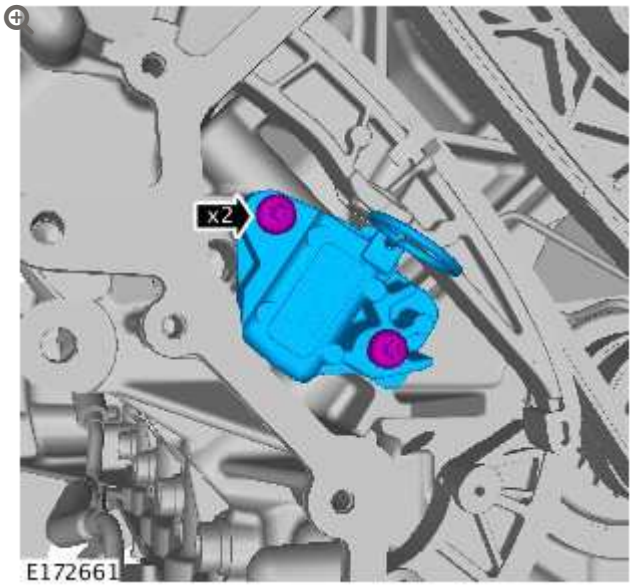

Before installing the timing chain tensioners, make sure the attached animation is followed to ensure the tensioner is set correctly, failure to do this may result in damage to the engine.

Torque: **12 Nm**

86.

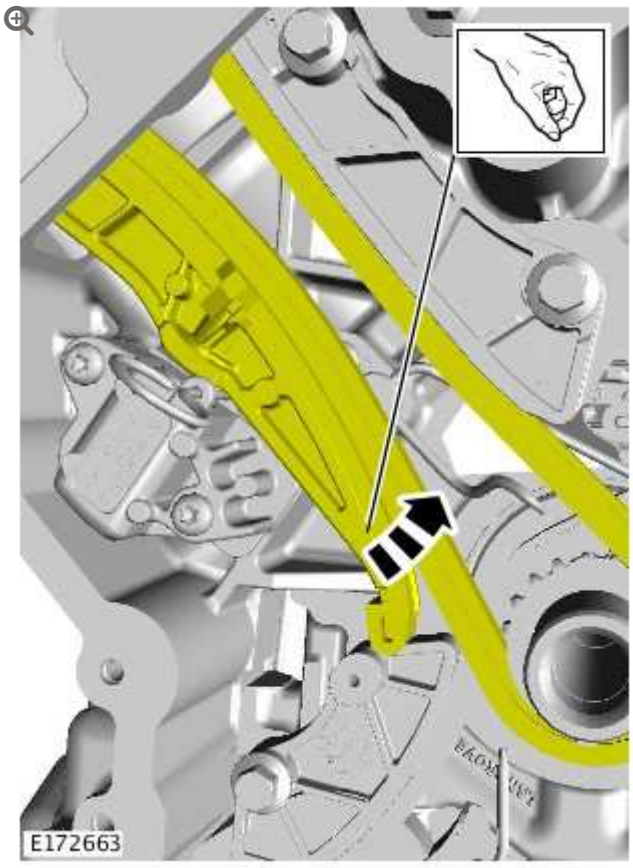

Apply and maintain tension on the component.

87.

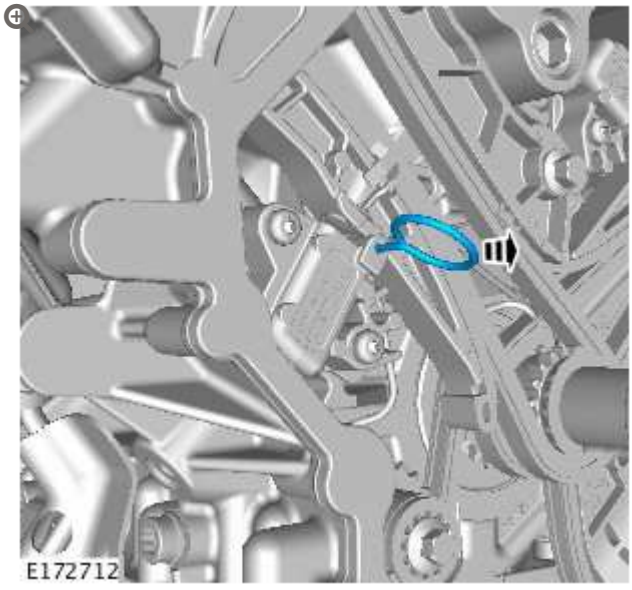

Remove the timing chain tensioner retaining pin and release the timing chain guide.

88.

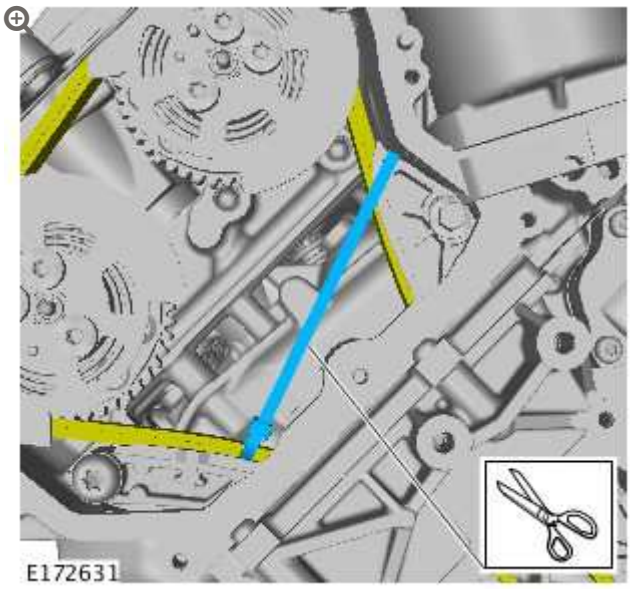

Remove and discard the tie strap.

89.

NOTE:

Left hand illustration shown, Right hand is similar.

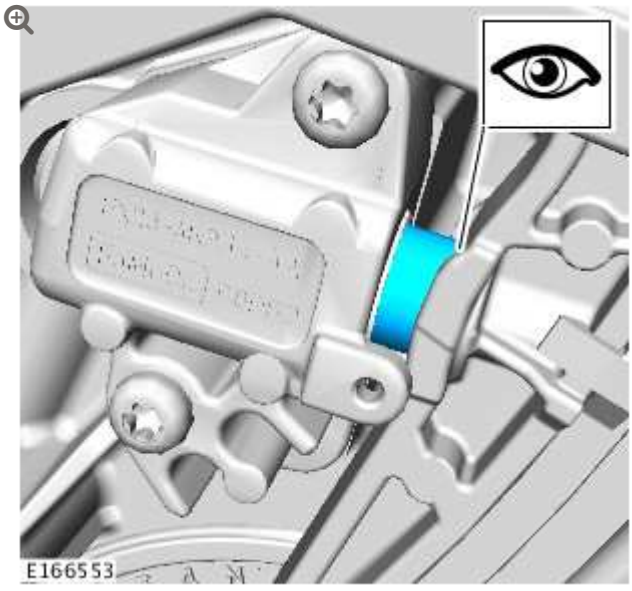

The piston should apply tension to the timing chain guide.

90.

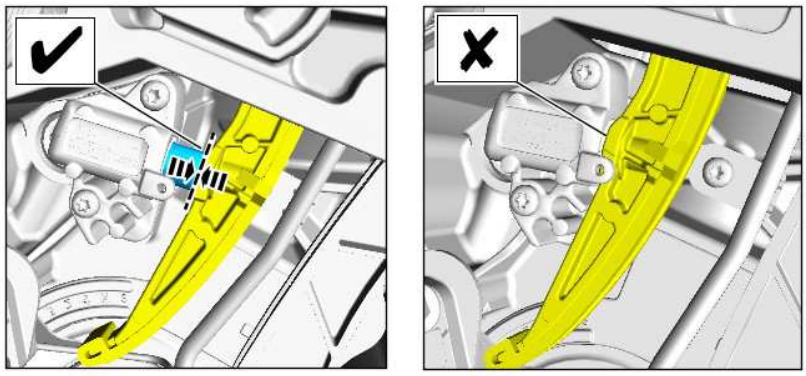

E166556

The timing chain tensioner must maintain tension on the chain guide. If the piston can be pushed back so the chain guide contacts with the body of the tensioner, the tensioner is not correct. Repeat steps 84-90.

91.

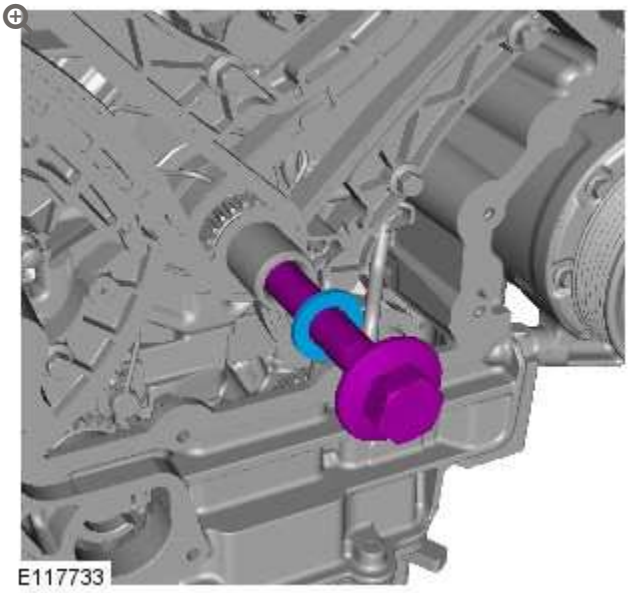

Remove the crankshaft pulley bolt.

INSTALLATION

1.

CAUTIONS:

- Use only a plastic scraper when removing the sealing material.
- Make sure that the mating faces are clean and free of foreign material.
- Make sure that the Land Rover approved cleaning fluid (Loctite 7063) is used to clean the mating faces.

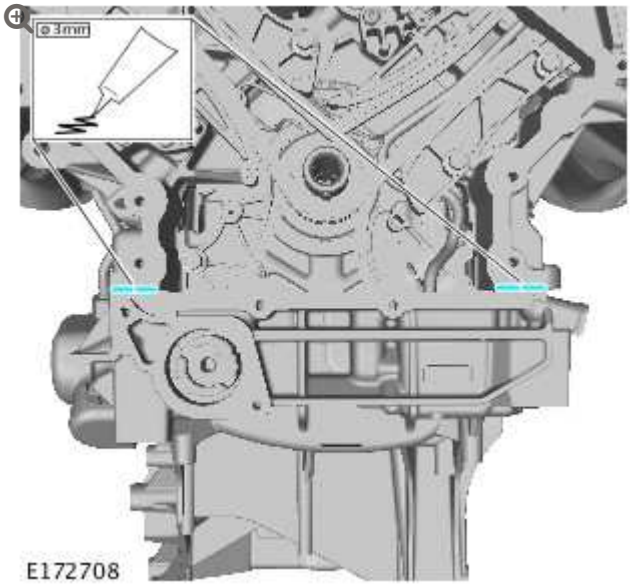

Apply RTV sealant (Loctite 5901G) to the areas shown.

2.

CAUTION:

Make sure that a new component is installed.

NOTE:

Tighten the retaining bolts in the indicated sequence.

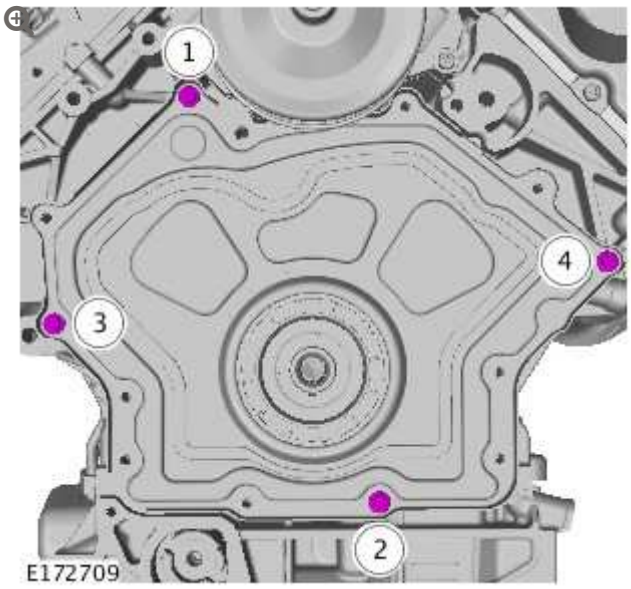

Tighten the lower timing cover bolts within 7 minutes.

Torque: **12 Nm**

3.

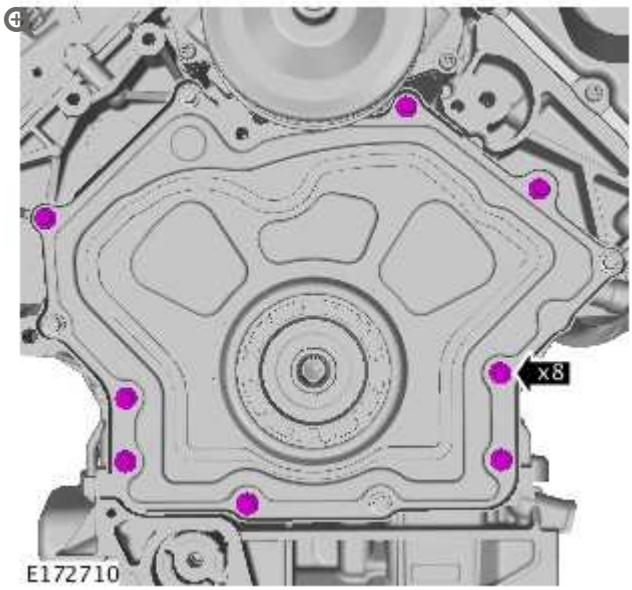

Tighten the lower timing cover bolts within 7 minutes.

Torque: **12 Nm**

4.

NOTE:

Lubricate the O-ring seal with clean engine oil.

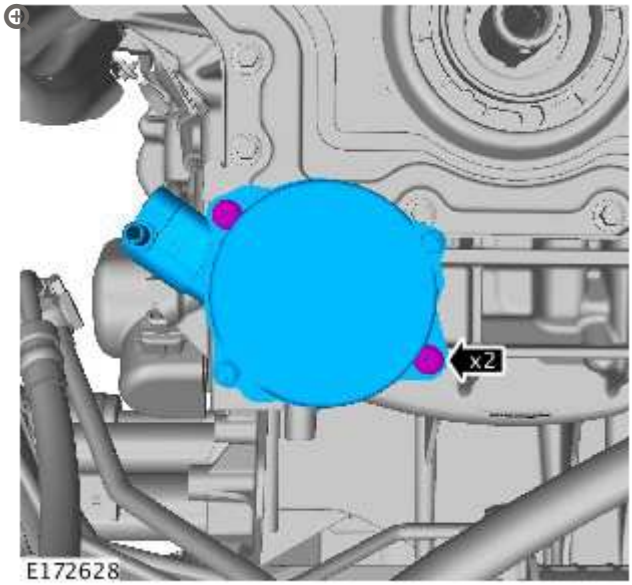

Torque: **12 Nm**

5.

CAUTIONS:

- Use only a plastic scraper when removing the sealing material.
- Make sure that the mating faces are clean and free of foreign material.
- Make sure that the Land Rover approved cleaning fluid (Loctite 7063) is used to clean the mating faces.

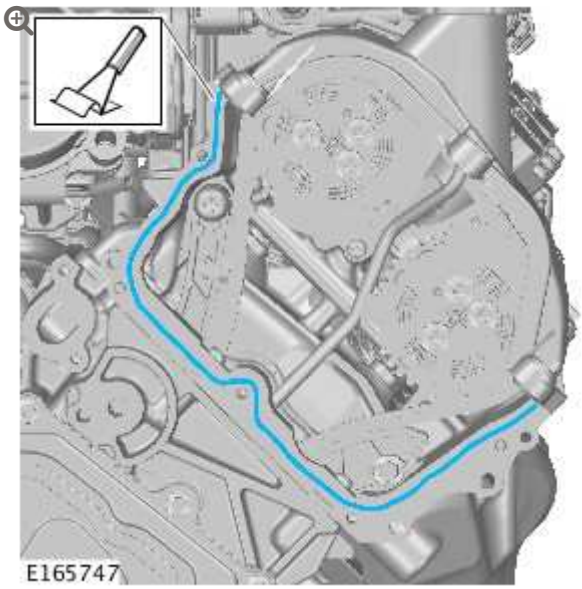

6.

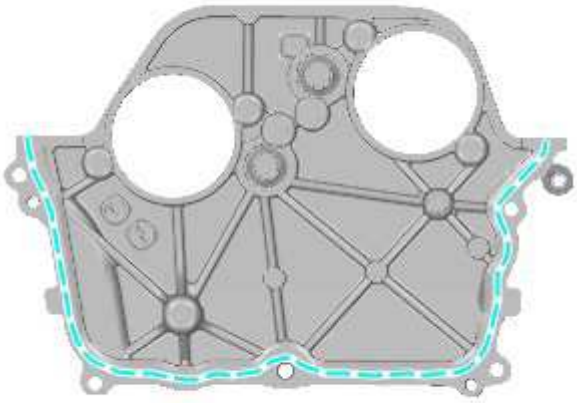

Apply RTV sealant (Loctite 5901G) to the areas shown, install the component, and tighten the bolts within 7 minutes.

7.

CAUTION:

Take extra care not to damage the seal when installing the component.

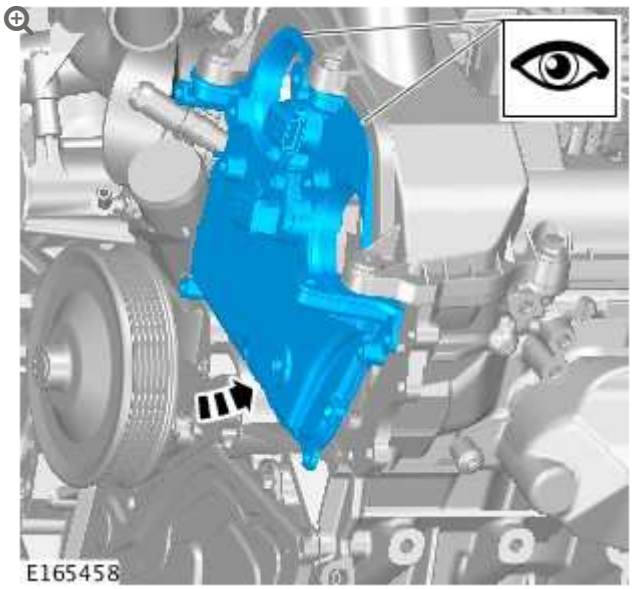

8.

NOTE:

Tighten the retaining bolts in the indicated sequence.

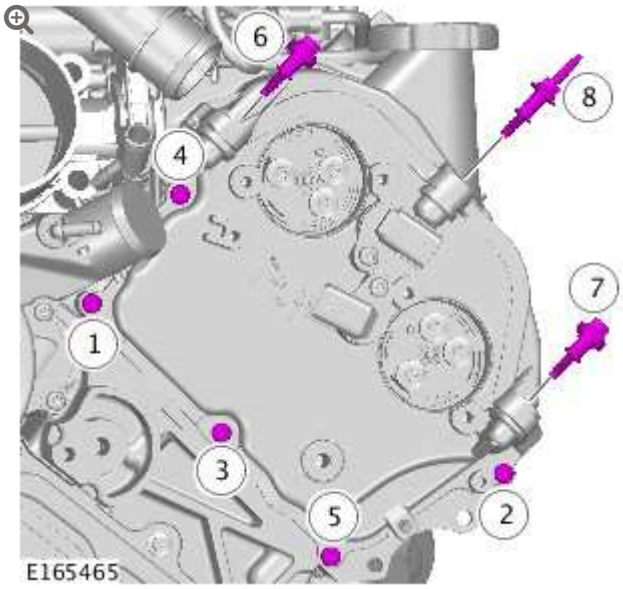

Torque: **12 Nm**

9.

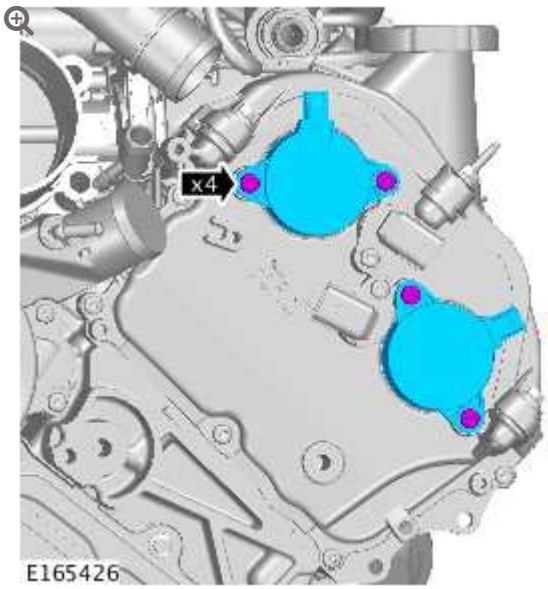

Torque: **12 Nm**

10.

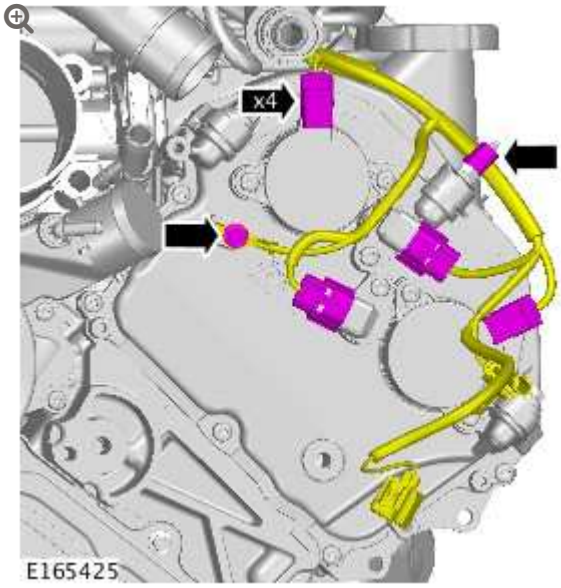

Torque: **10 Nm**

11.

CAUTION:

Using a suitable tool, lock the component.

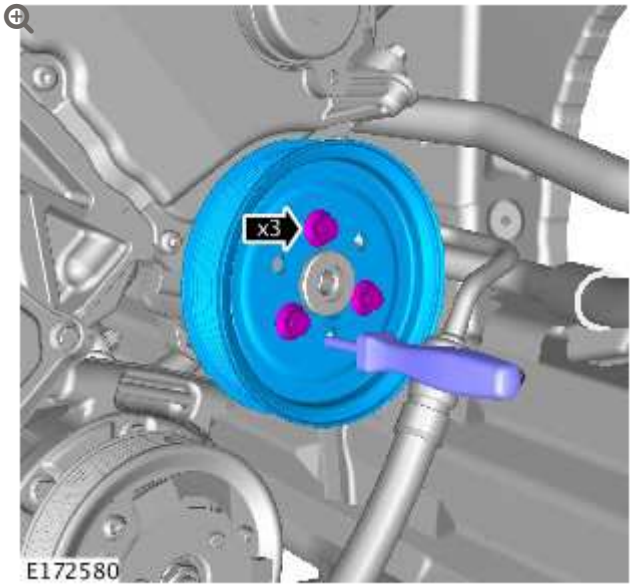

Torque: **25 Nm**

12.

CAUTIONS:

- Use only a plastic scraper when removing the sealing material.
- Make sure that the mating faces are clean and free of foreign material.
- Make sure that the Land Rover approved cleaning fluid (Loctite 7063) is used to clean the mating faces.

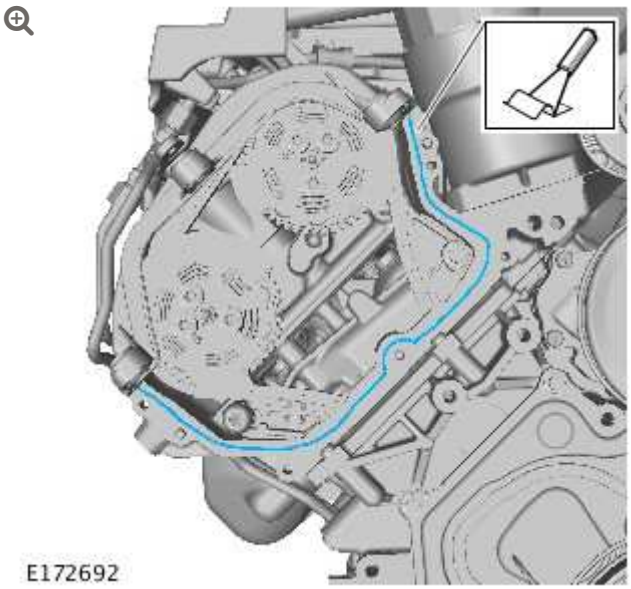

13.

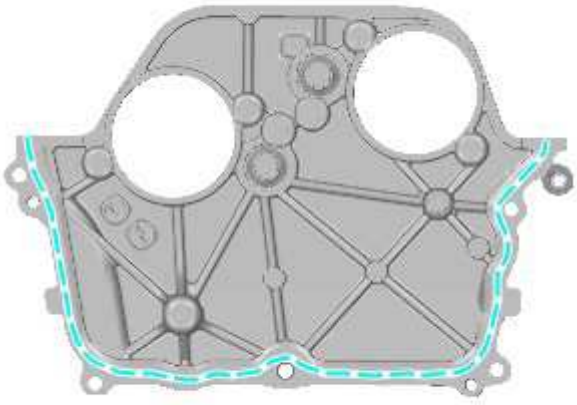

Apply RTV sealant (Loctite 5901G) to the areas shown, install the component, and tighten the bolts within 7 minutes.

14.

CAUTION:

Take extra care not to damage the seal when installing the component.

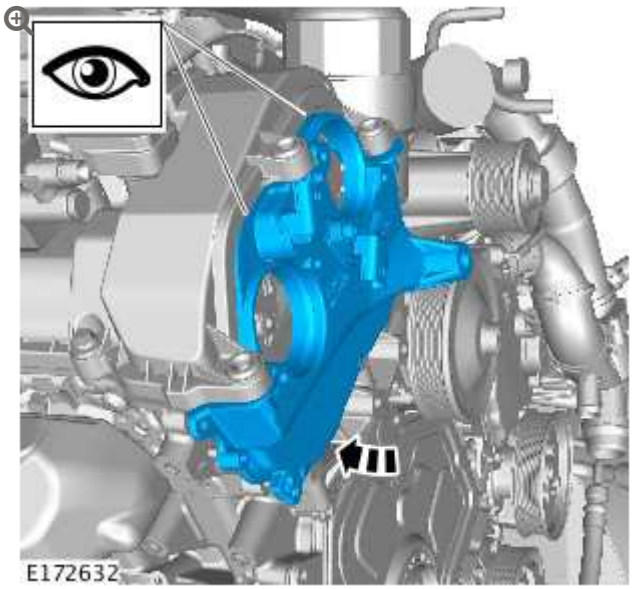

15.

NOTE:

Tighten the retaining bolts in the indicated sequence.

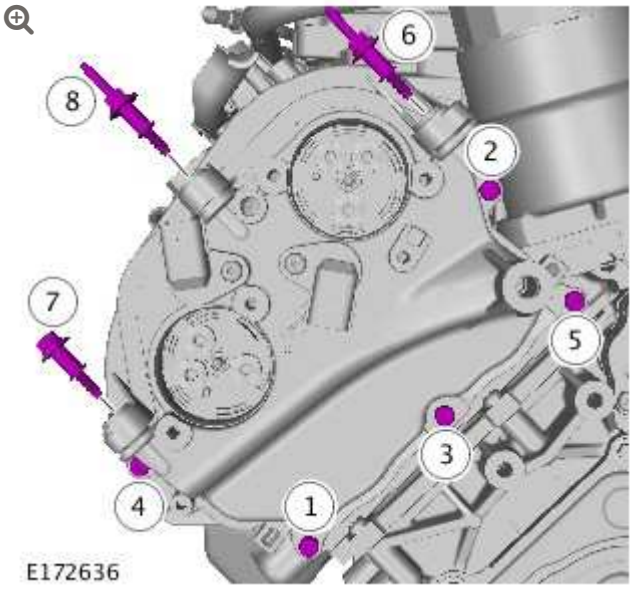

13

Torque: **12 Nm**

16.

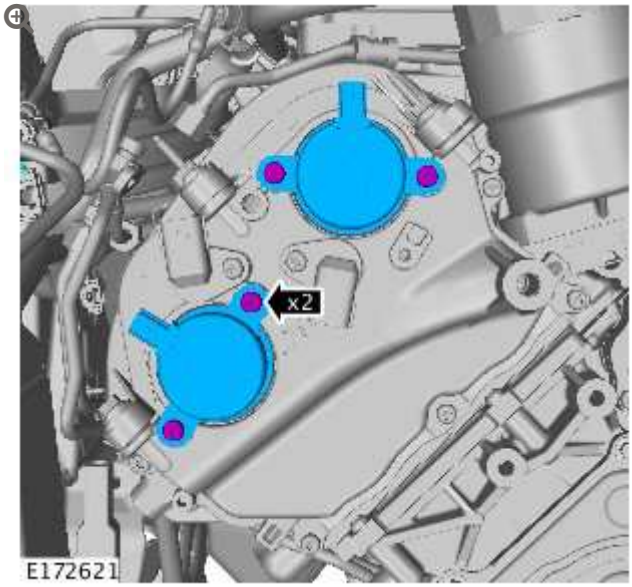

Torque: **12 Nm**

17.

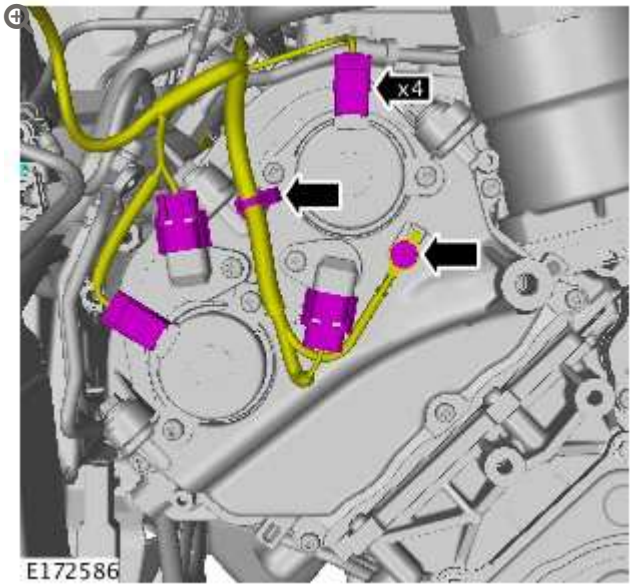

Torque: **10 Nm**

18.

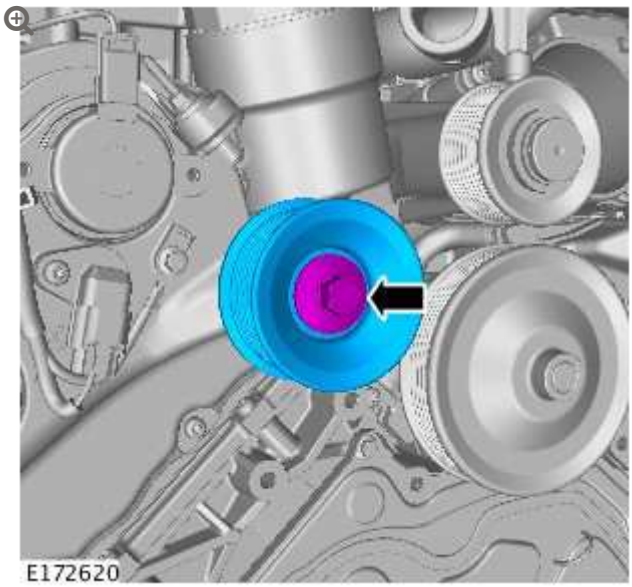

Torque: **48 Nm**

19.

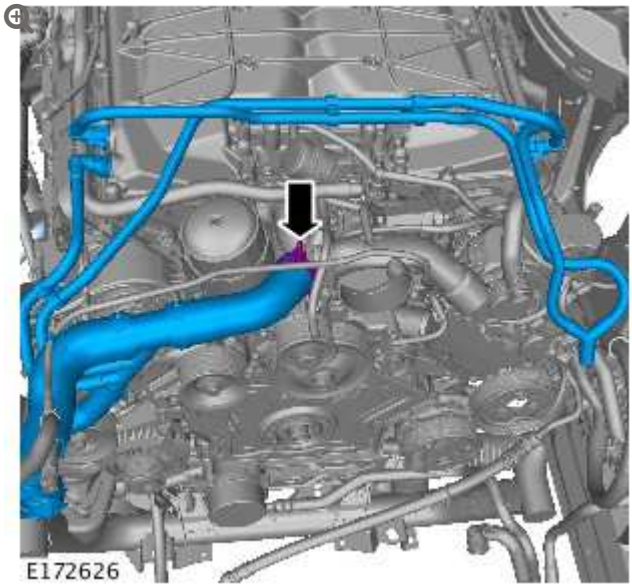

20.

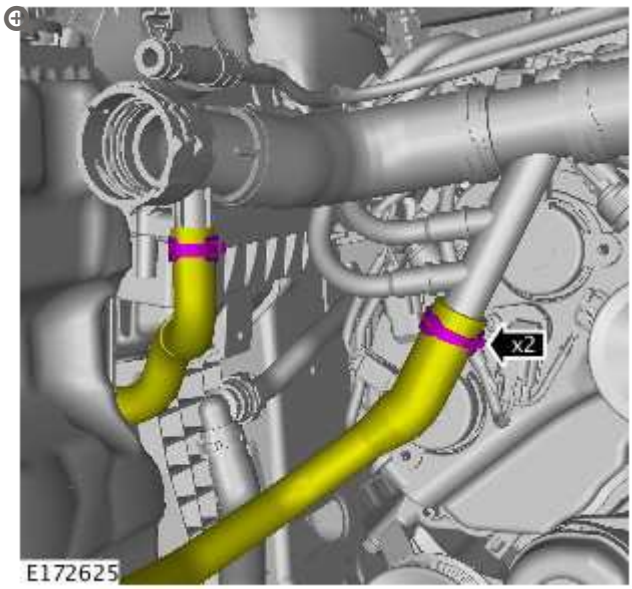

21.

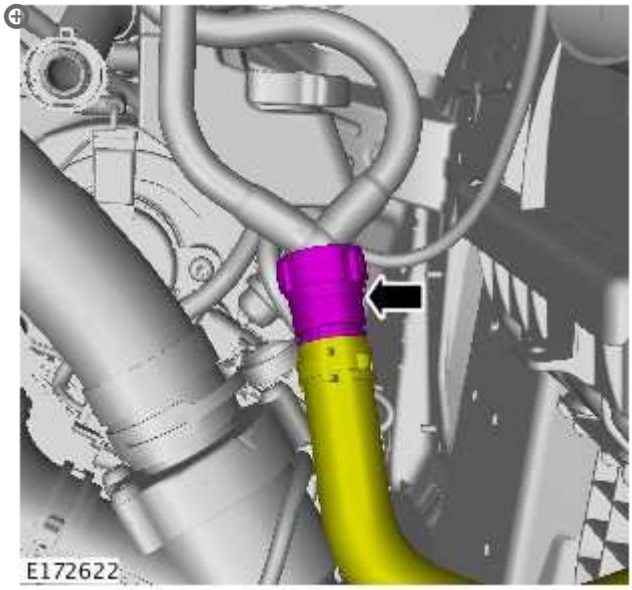

22.

NOTE:

Some variation in the illustrations may occur, but the essential information is always correct.

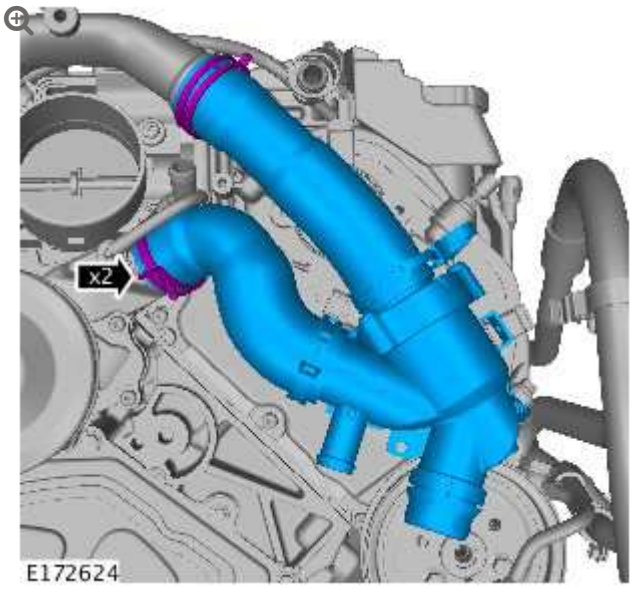

23.

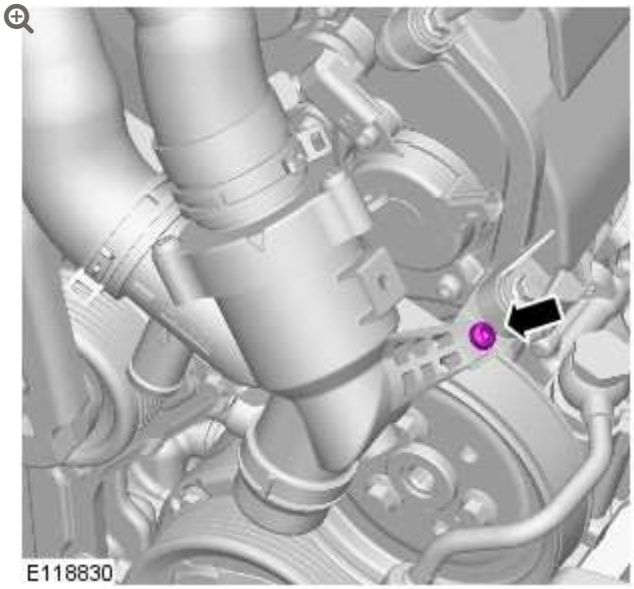

Torque: **10 Nm**

24.

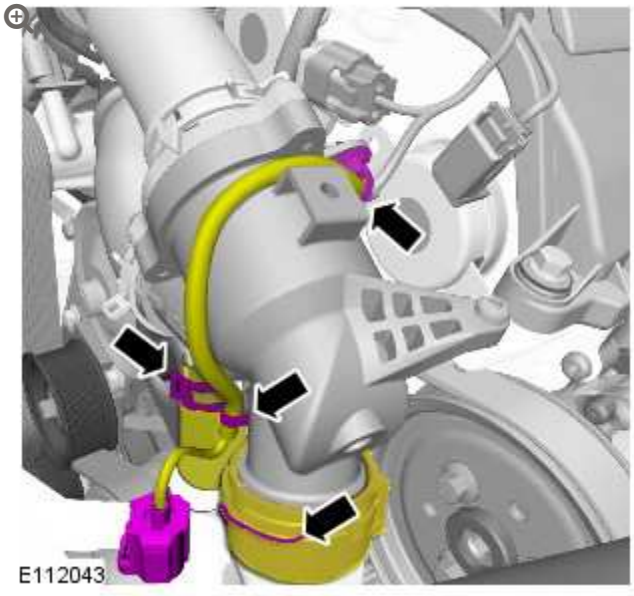

25.

CAUTIONS:

- Lubricate only the union threads with clean engine oil.
- Only tighten the bolts finger-tight at this stage.

NOTE:

Remove and discard the blanking caps.

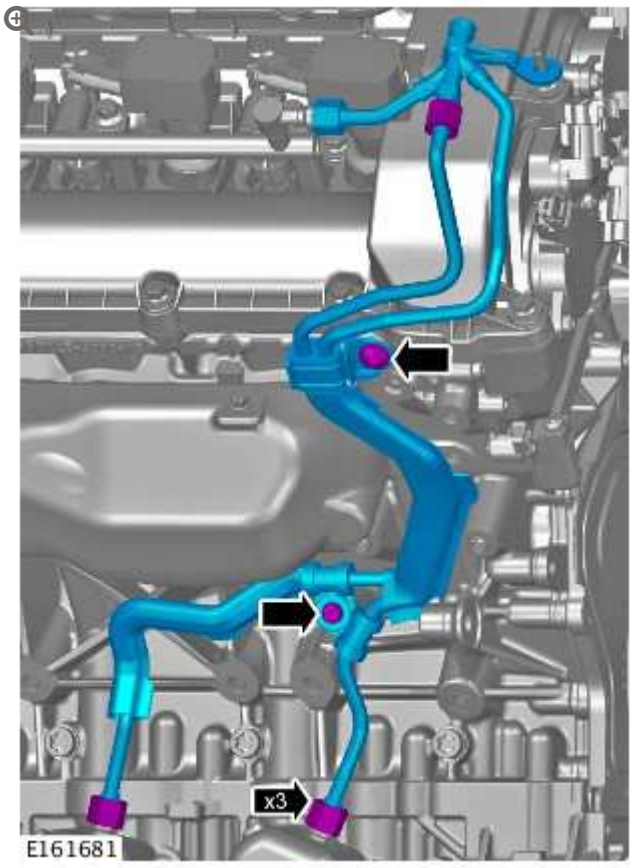

26.

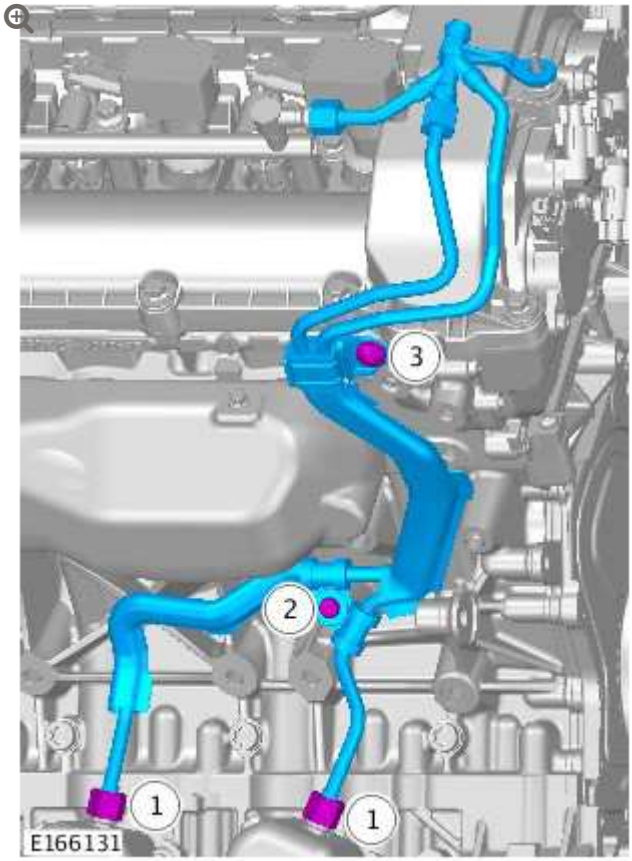

Torque:

Unions (1) **21 Nm**

M6 (2) **11 Nm**

M8 (3) **25 Nm**

27.

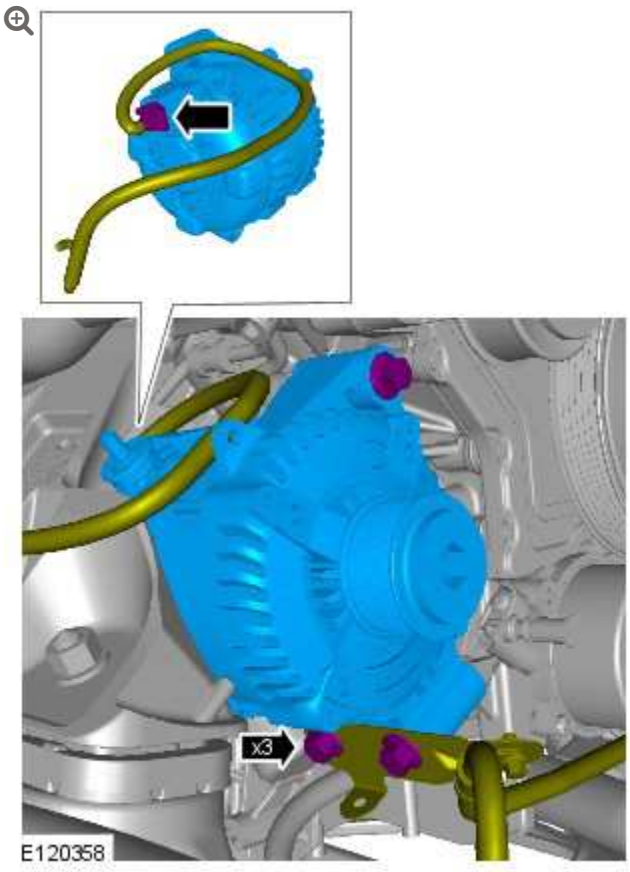

Torque: **48 Nm**

28.

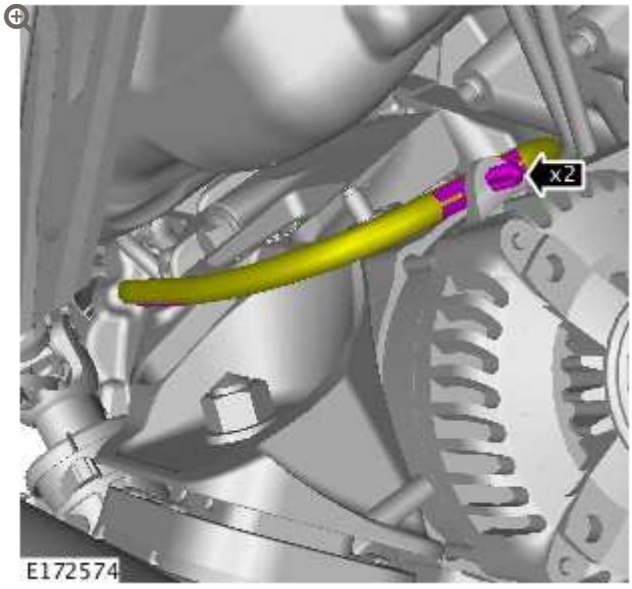

29.

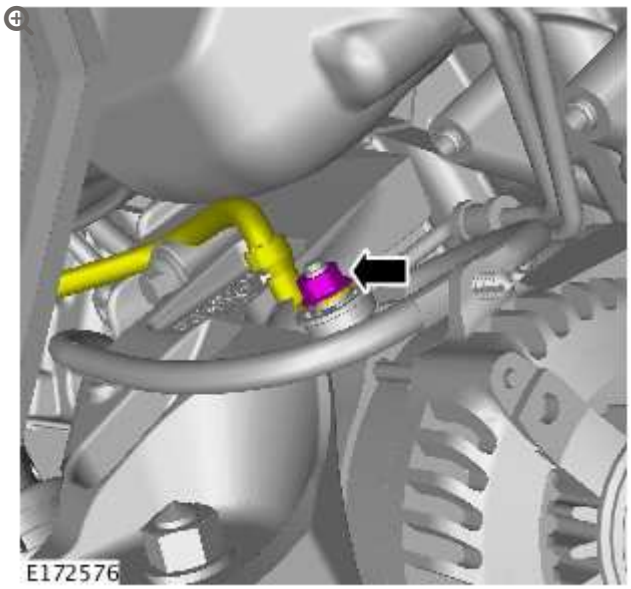

Torque: **12 Nm**

30.

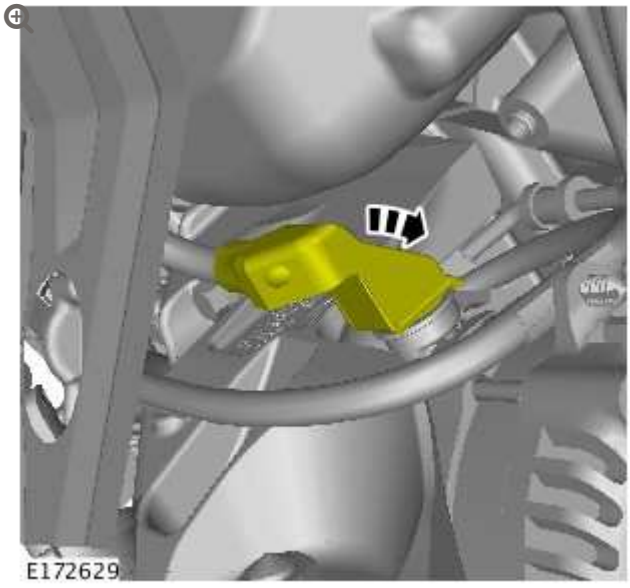

31.

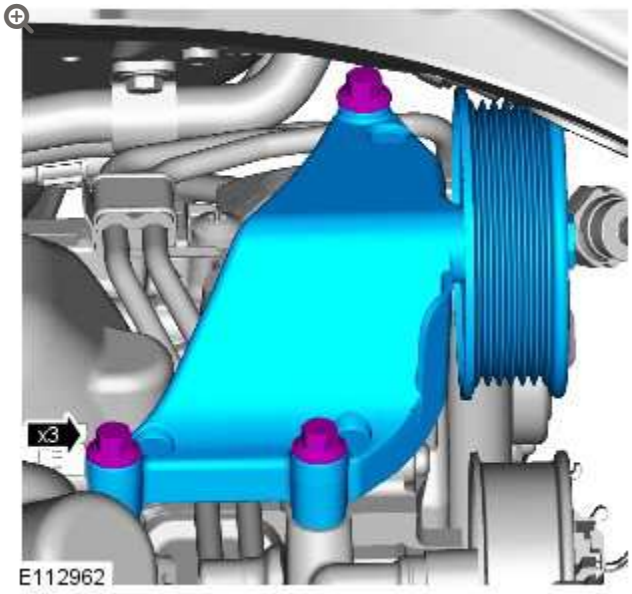

Torque: **25 Nm**

32.

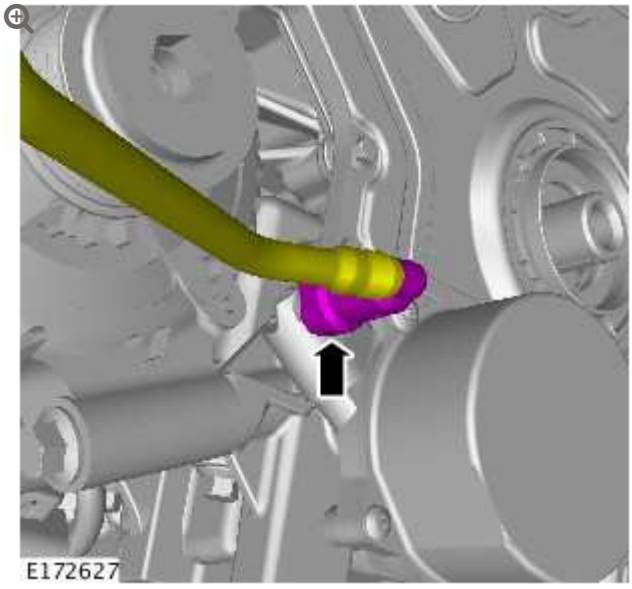

33. Refer to: Fender Splash Shield (501-02 Front End Body Panels, Removal and Installation).

34.

WARNING:

The wheel and tire assembly will be heavy.

CAUTION:

> Apply a small amount of grease to the hub and wheel mating surfaces before installation. Make sure the grease does not come into contact with the vehicles braking components and the wheel stud threads. Failure to follow these instructions may result in personal injury.

Install the RH front wheel and tire.
Torque: **140 Nm**

35.

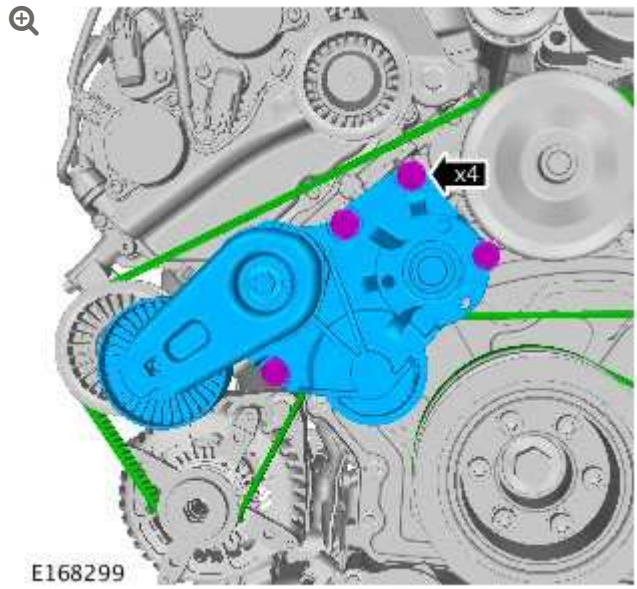

Torque: **25 Nm**

36.

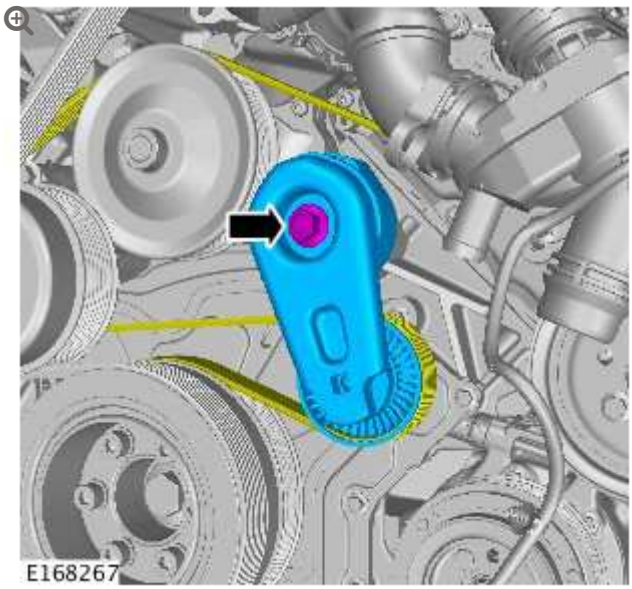

Torque: **48 Nm**

37.

CAUTION:

Using a suitable tool, lock the component.

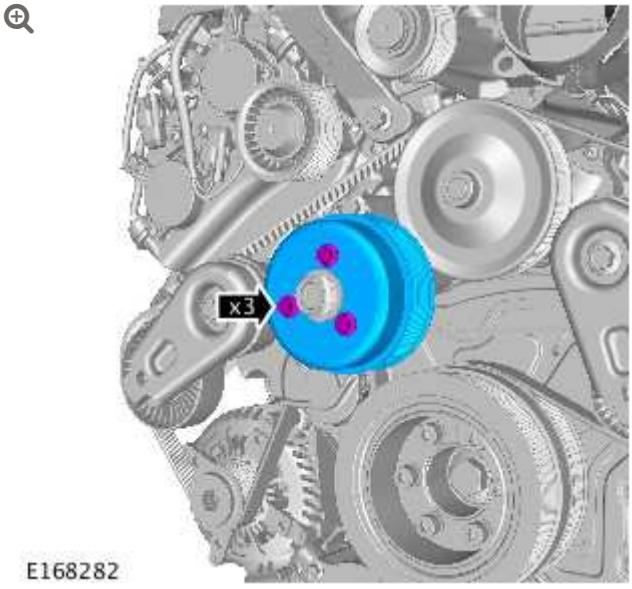

Torque: **25 Nm**

38.

Refer to: Crankshaft Pulley (303-01 Engine - V8 S/C 5.0L Petrol, Removal and Installation).

39.

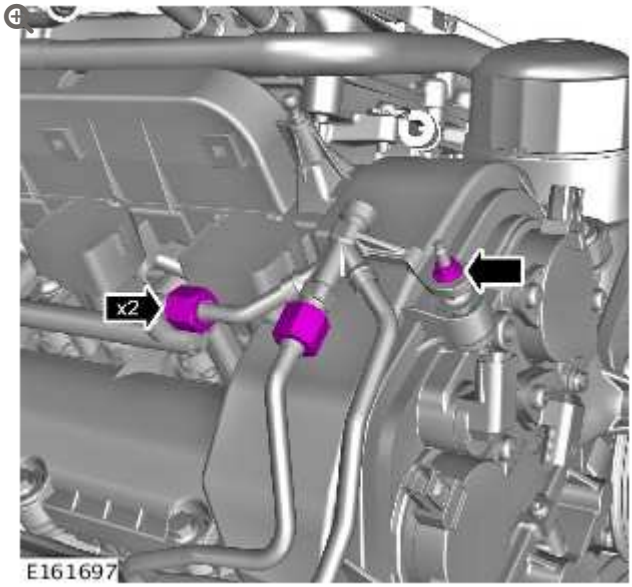

Torque:

Unions **21 Nm**

M5 nut **6 Nm**

40.

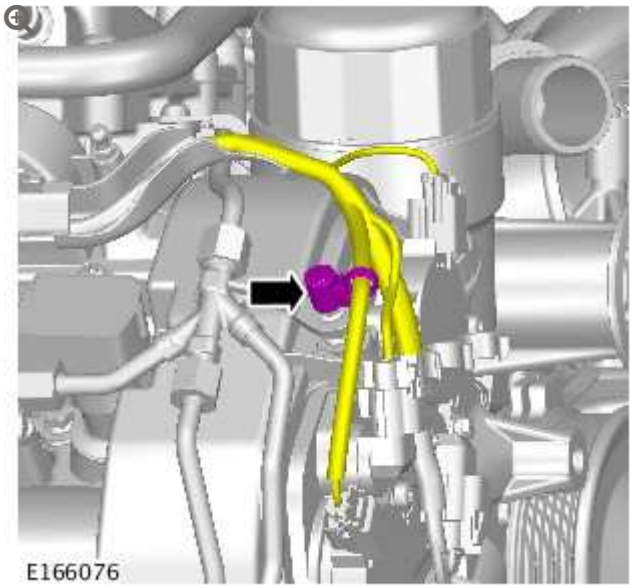

41.

CAUTION:

This fuel pipe can be re-used, inspect for signs of damage. Renew if necessary.

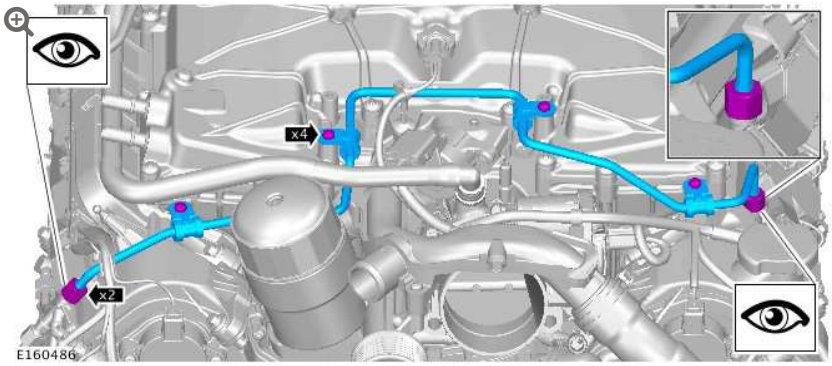

Torque:

Unions **21 Nm**

Bolts **12 Nm**

42.

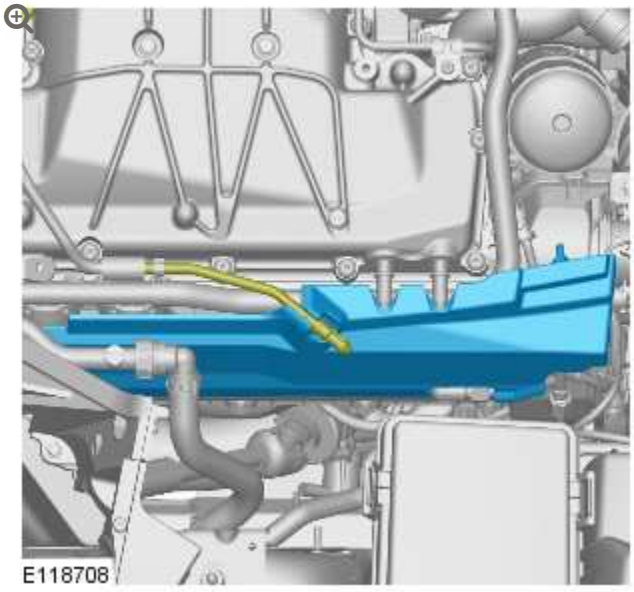

43.

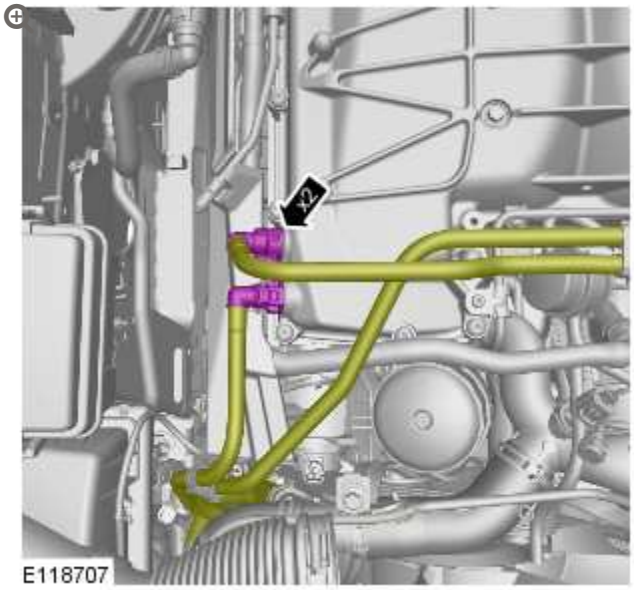

44.

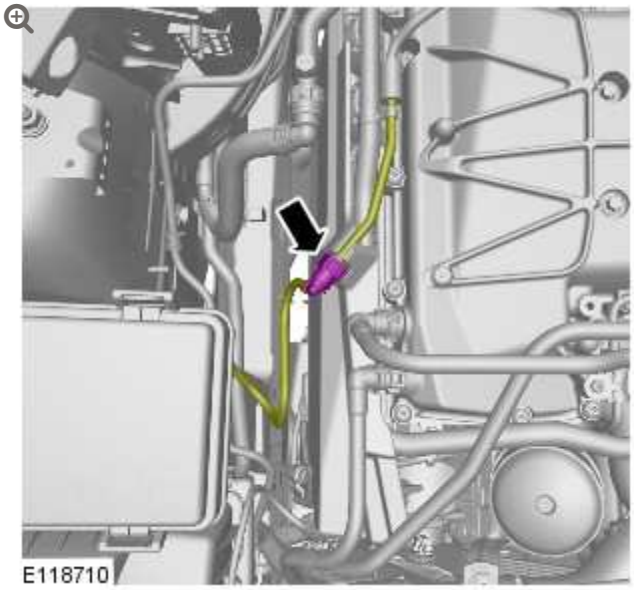

45.

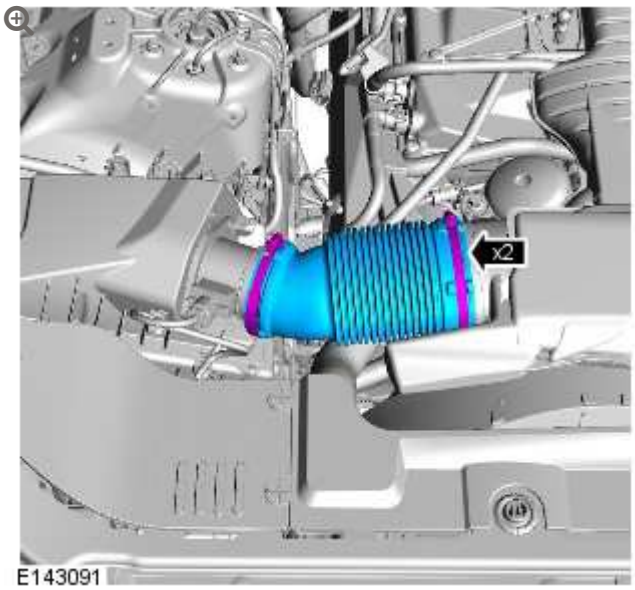

46.

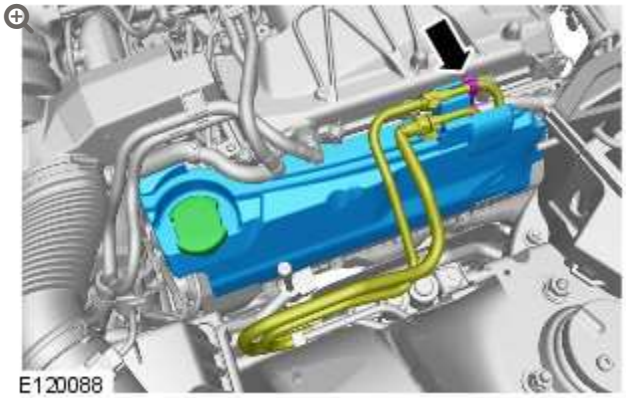

47.

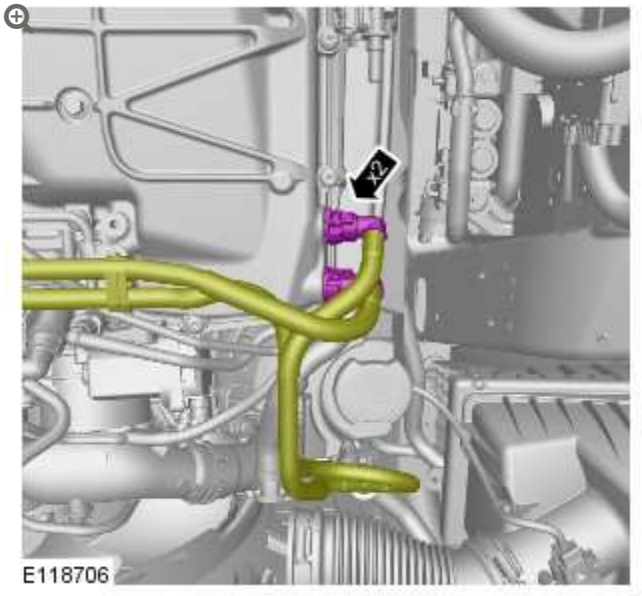

48. Refer to: Air Cleaner Outlet Pipe T-Connector (303-12B Intake Air Distribution and Filtering - V8 S/C 5.0L Petrol, Removal and Installation).

49. Connect the battery ground cable.
Refer to: Specifications (414-00 Battery and Charging System - General Information, Specifications).

ENGINE – V8 S/C 5.0L PETROL

TIMING COVER (G1224607)

REMOVAL AND INSTALLATION

12.65.01	COVER - TIMING GEARS - RENEW	5000 CC, AJ V8, SUPERCHARGED	13	USED WITHINS	+

SPECIAL TOOL(S)



303-1433

Lower Timing Cover Alignment tool

REMOVAL

NOTE:

Removal steps in this procedure may contain installation details.

1. Disconnect the battery ground cable.
   Refer to: Specifications (414-00 Battery and Charging System - General Information, Specifications).

2. **WARNING:**

   Make sure to support the vehicle with axle stands.

   Raise and support the vehicle.

3. Refer to: Crankshaft Pulley (303-01 Engine - V8 S/C 5.0L Petrol, Removal and Installation).

4. **CAUTION:**

   Be prepared to collect escaping oil.

   NOTE:

   Discard the seal.

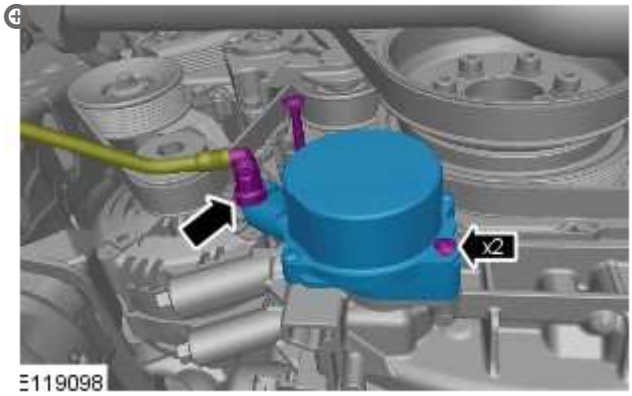

5. Refer to: Valve Cover LH (303-01B Engine - V8 S/C 5.0L Petrol, Removal and Installation).

6. Refer to: Valve Cover RH (303-01B Engine - V8 S/C 5.0L Petrol, Removal and Installation).

7. Refer to: Cooling System Partial Draining and Vacuum Filling (303-03B, General Procedures).

8. 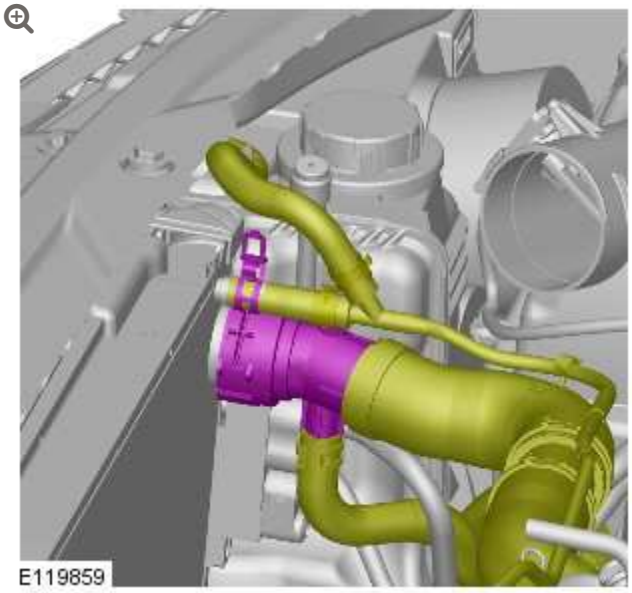

9.

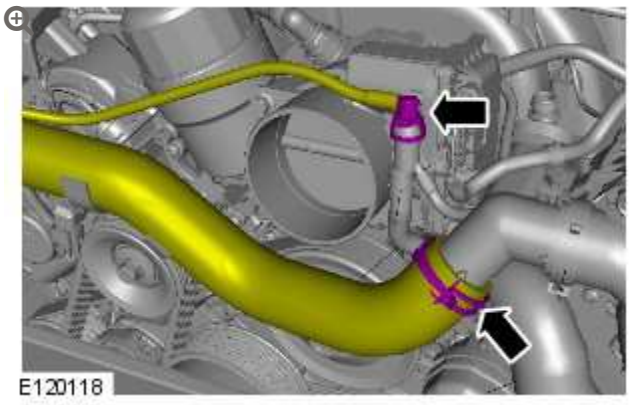

10.

CAUTION:

Be prepared to collect escaping coolant.

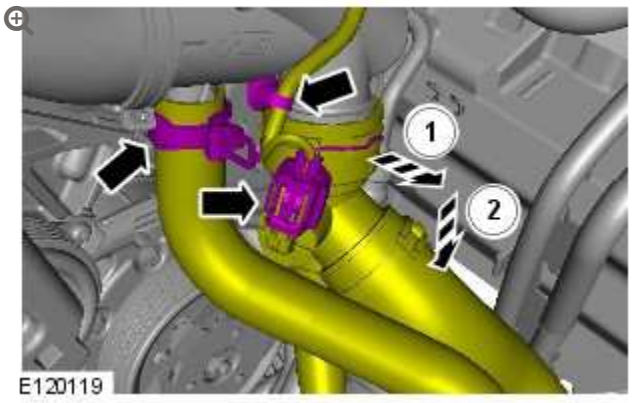

11.

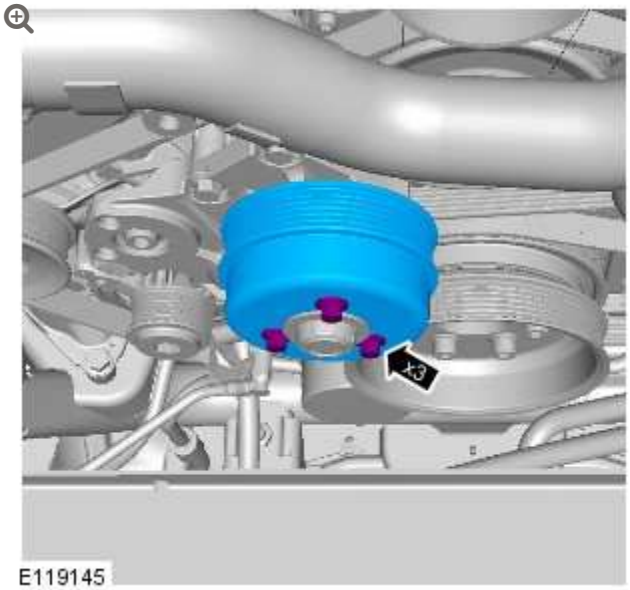

12.

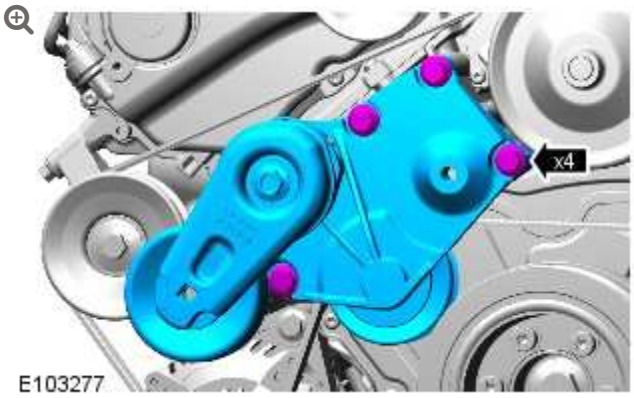

13.

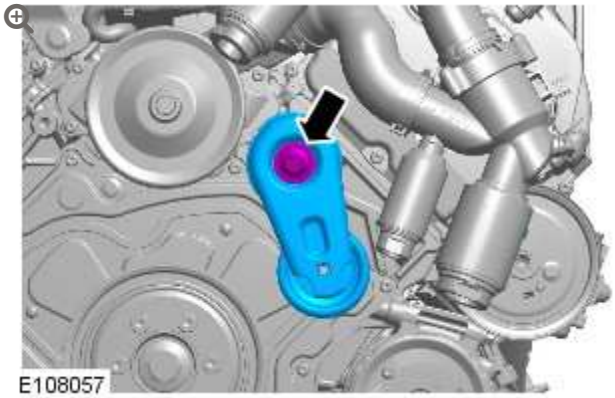

14.

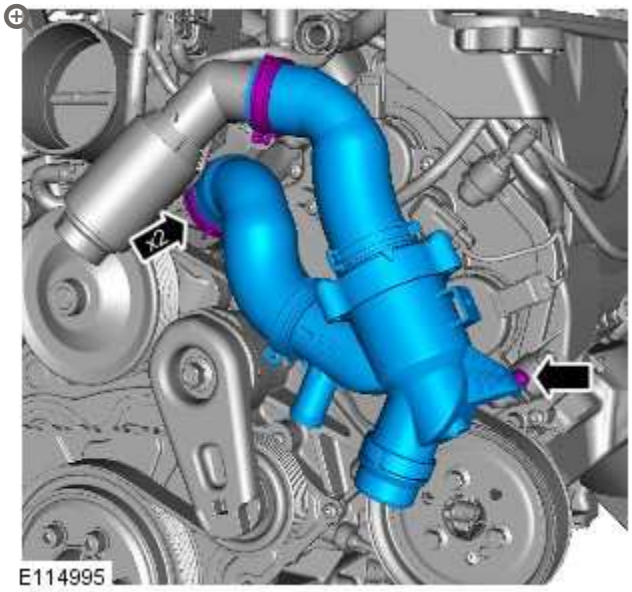

15.

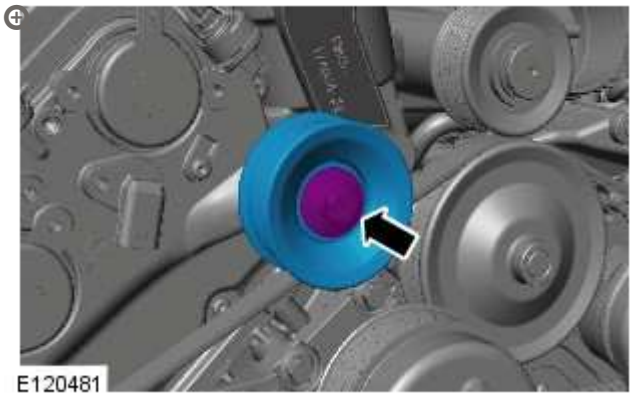

16.



17.

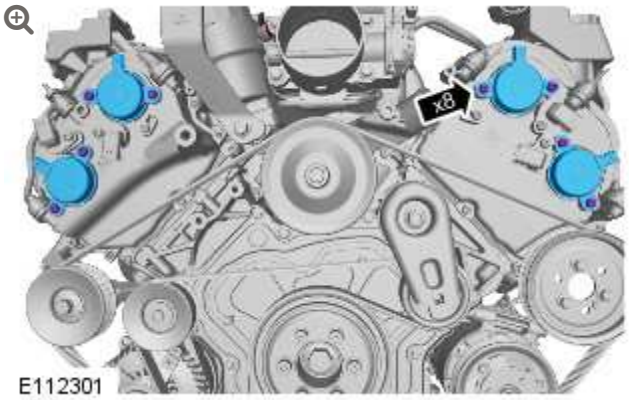

18.

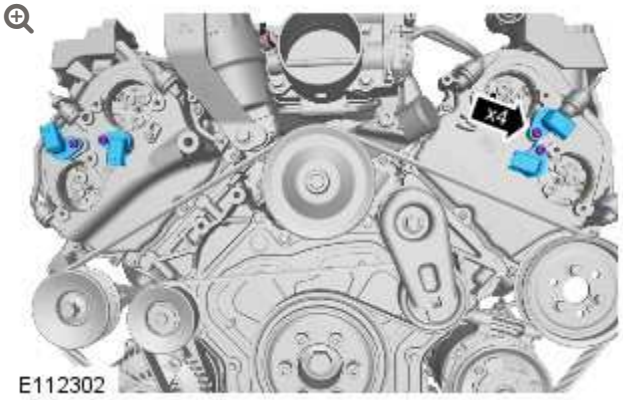

19.



INSTALLATION

1.

CAUTION:

Make sure that the mating faces are clean and free of foreign material.

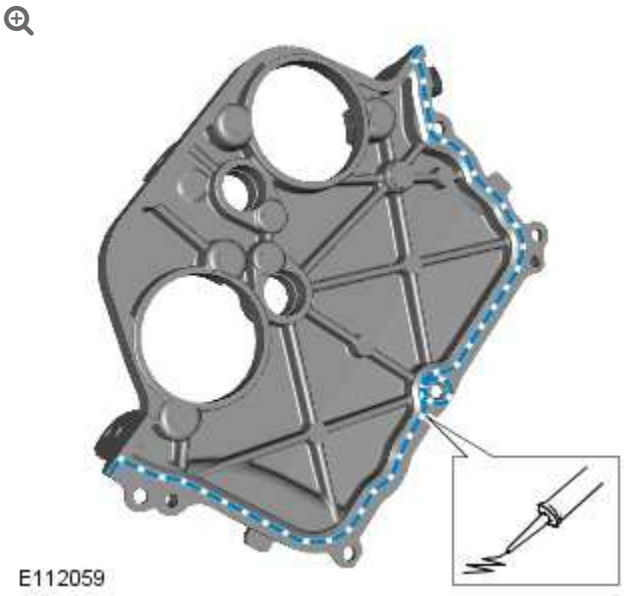

- Apply RTV sealant WSE-M4G323-A6 (Loctite 5901G) to the areas shown, and tighten the bolts within 7 minutes.

2.

CAUTION:

Make sure that the mating faces are clean and free of foreign material.



- Apply RTV sealant WSE-M4G323-A6 (Loctite 5901G) to the areas shown, and tighten the bolts within 7 minutes.

3.

NOTE:

Tighten the bolts in the indicated sequence.

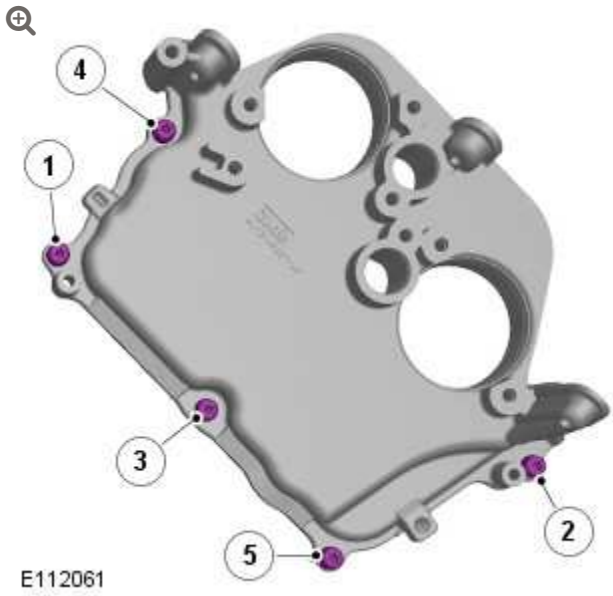

Torque: **12 Nm**

4.

NOTE:

Tighten the bolts in the indicated sequence.



Torque: **12 Nm**

5.

CAUTION:

Make sure that the mating faces are clean and free of foreign material.

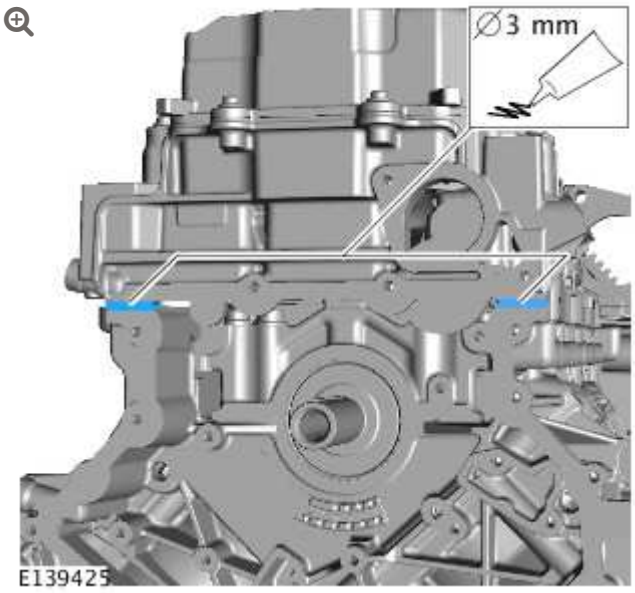

Apply RTV sealant WSE-M4G323-A6 (Loctite 5901G) to the areas shown, and tighten the bolts within 7 minutes.

6.

CAUTION:

Make sure that the mating faces are clean and free of foreign material.

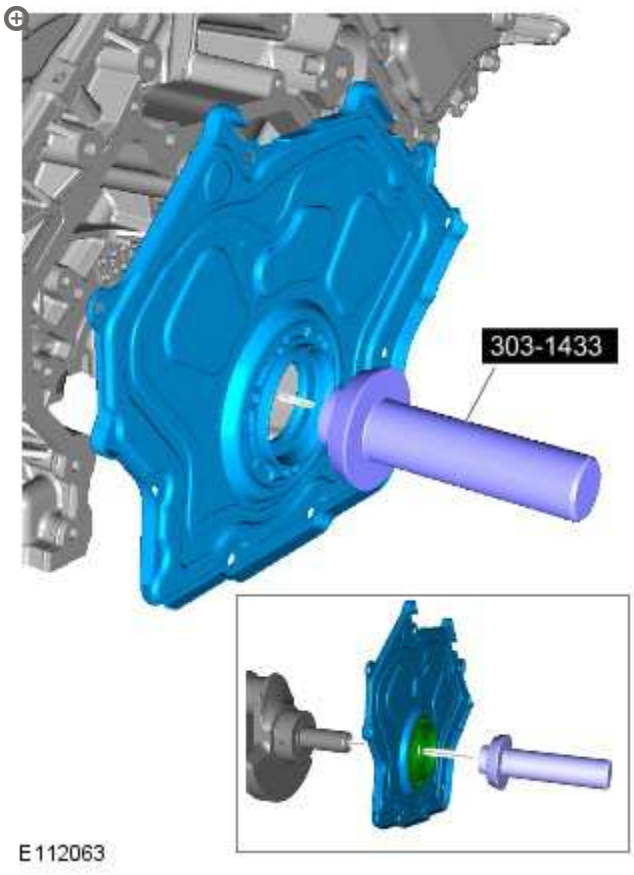

Install the bolts, but do not tighten fully at this stage.

Special Tool(s): 303-1433

7.

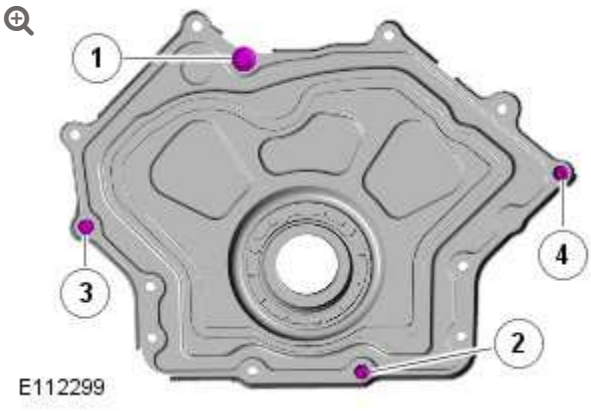

Torque:

M6 **12 Nm**

M8 **20 Nm**

8.

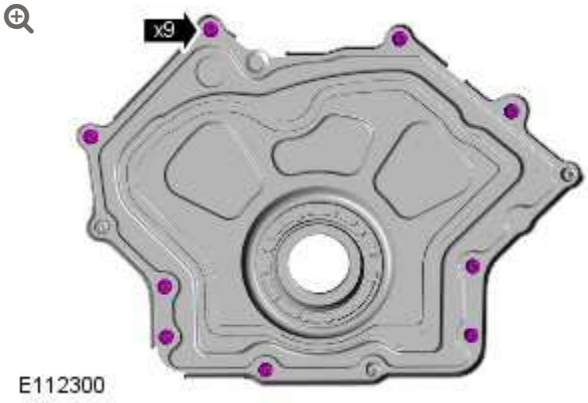

Torque: **12 Nm**

9.

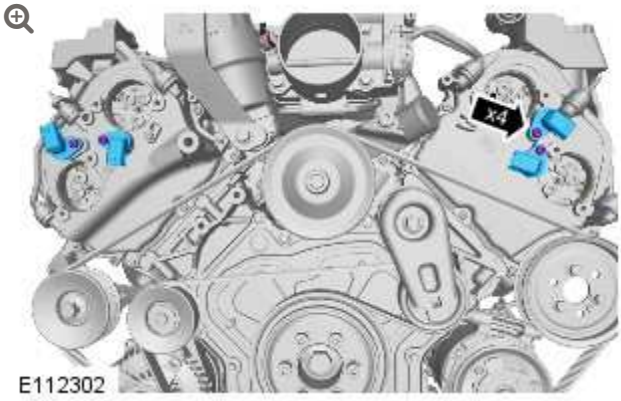

Torque: **12 Nm**

10.

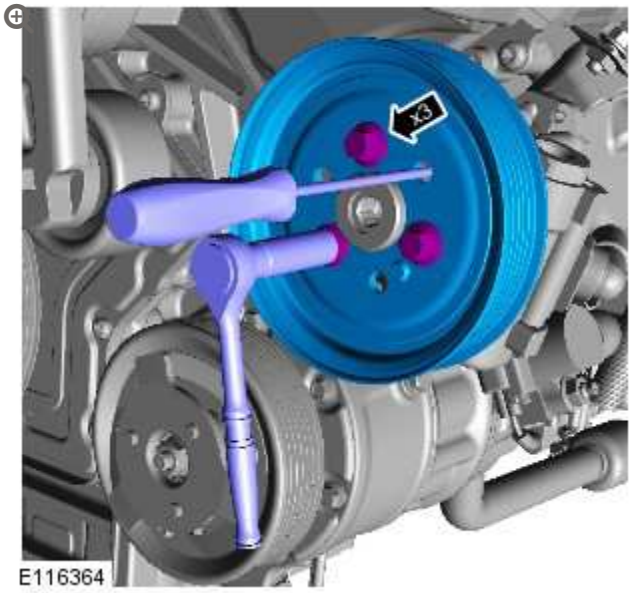

Torque: **25 Nm**

11.



Torque: **12 Nm**

12.

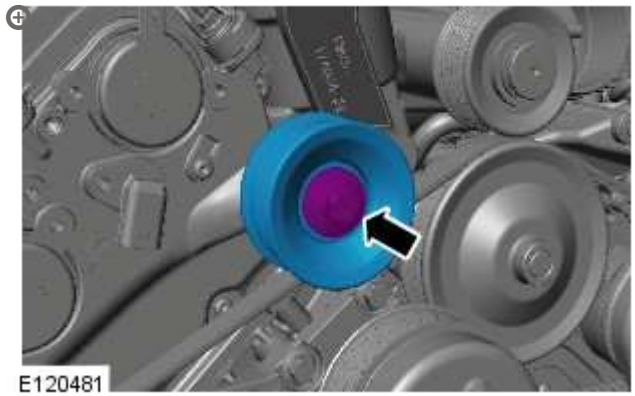

Torque: **40 Nm**

13.

NOTE:

Install the bolt finger tight before final tightening.

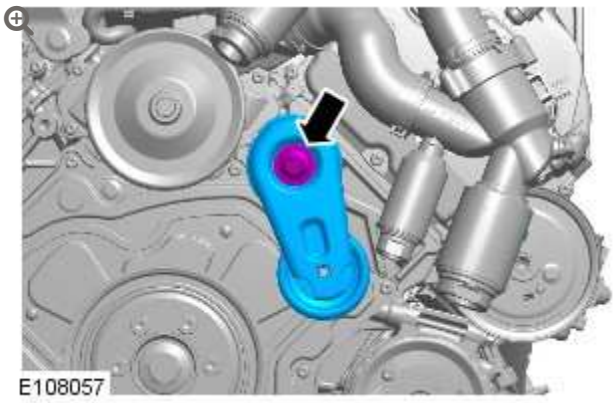

Torque: **40 Nm**

14.

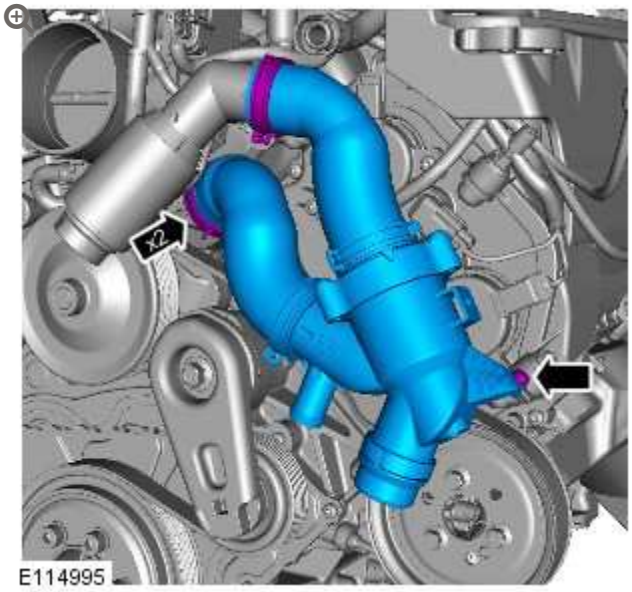

15.

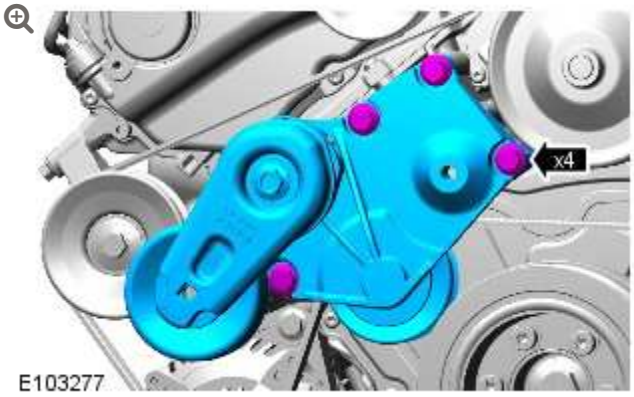

Torque: **25 Nm**

16.

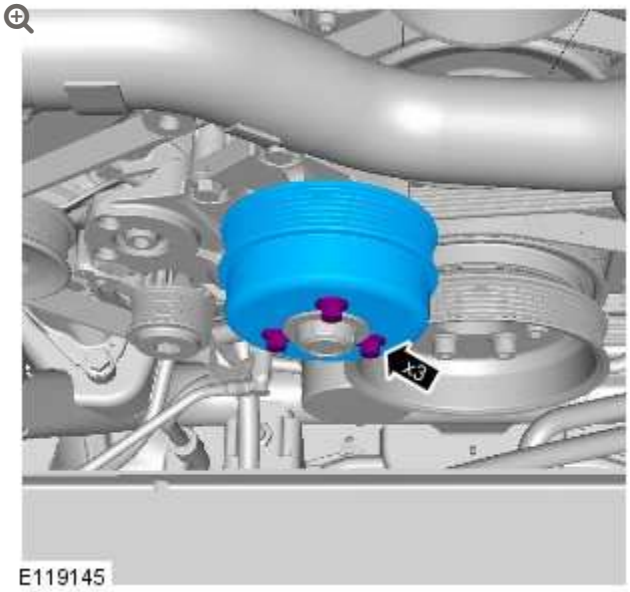

Torque: **25 Nm**

17.

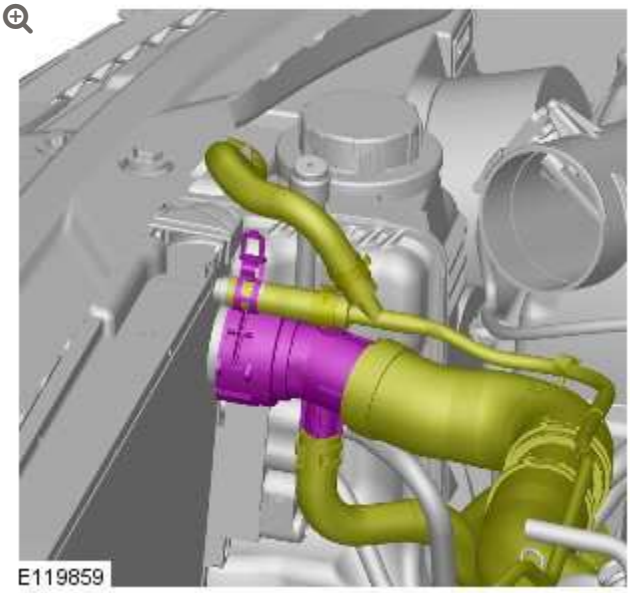

18.

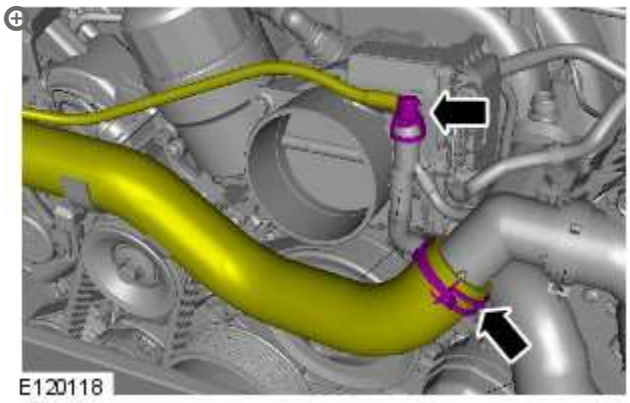

19.

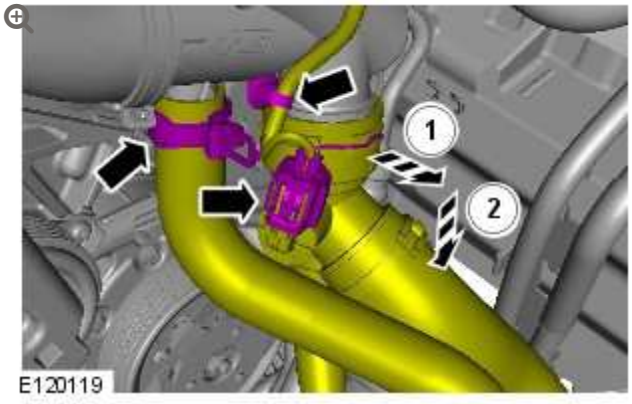

20.

NOTE:

Install a new seal.

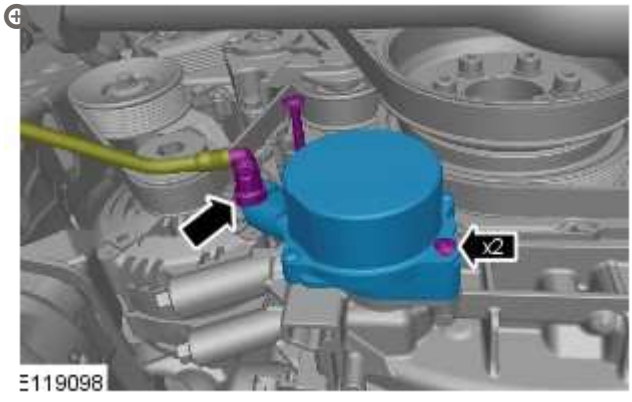

Torque: **12 Nm**

21. Refer to: Crankshaft Pulley (303-01 Engine - V8 S/C 5.0L Petrol, Removal and Installation).

22. Refer to: Valve Cover LH (303-01B Engine - V8 S/C 5.0L Petrol, Removal and Installation).

23. Refer to: Valve Cover RH (303-01B Engine - V8 S/C 5.0L Petrol, Removal and Installation).

24. Refer to: Cooling System Partial Draining and Vacuum Filling (303-03B, General Procedures).

25. Connect the battery ground cable.
    Refer to: Specifications (414-00 Battery and Charging System - General Information, Specifications).

26. Check and top up the engine oil.

ENGINE – V8 S/C 5.0L PETROL

TIMING DRIVE COMPONENTS (G1224608)

REMOVAL AND INSTALLATION

12.65.13	TIMING CHAIN, GEARS AND TENSIONER - RENEW	5000 CC, AJ V8, SUPERCHARGED	14.4	USED WITHINS	+

SPECIAL TOOL(S)



303-1445

Timing Tool – Camshaft Alignment



303-1447

Timing Tool



303-1452

Camshaft Rotating Tool



303-1482

Tensioner Tool



JLR-303-1303

Timing Tool



JLR-303-1304

Locking Tool

REMOVAL

CAUTION:

Check all timing components for wear and install new components if required.

NOTES:

- Removal steps in this procedure may contain installation details.
- Some variation in the illustrations may occur, but the essential information is always correct.

1. Disconnect the battery ground cable.
   Refer to: Specifications (414-00 Battery and Charging System - General Information, Specifications).

2.

WARNING:

Make sure to support the vehicle with axle stands.

Raise and support the vehicle.

3. Refer to: Timing Cover (303-01B Engine - V8 S/C 5.0L Petrol, Removal and Installation).

4. **CAUTION:**

An M16 washer must be used to prevent damage to the crankshaft on installation.

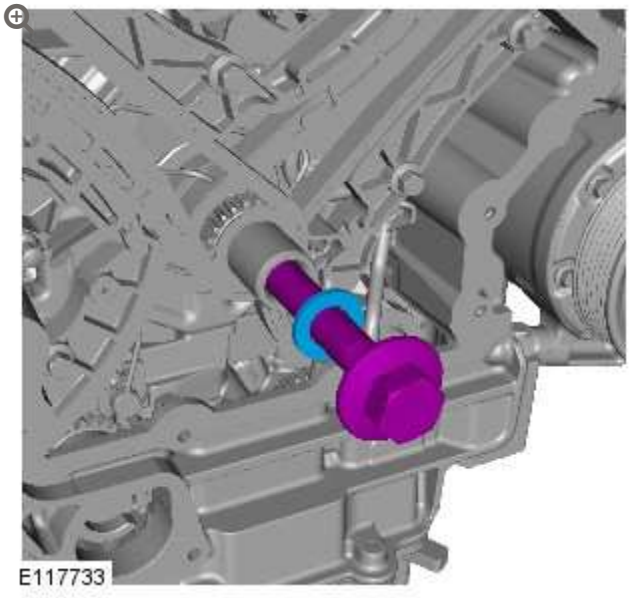

Install the crankshaft pulley bolt.

Torque: **20 Nm**

5.

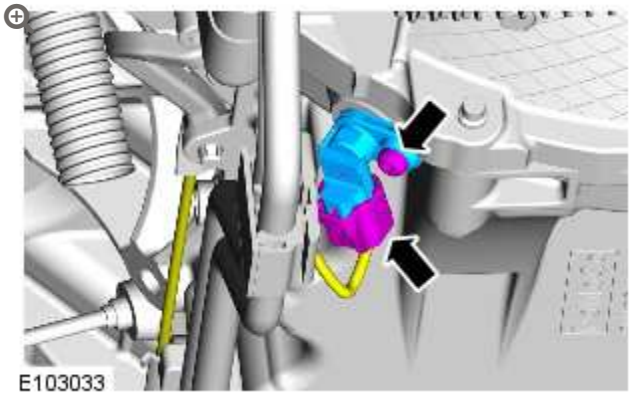

6.

CAUTION:

Only rotate the crankshaft clockwise.

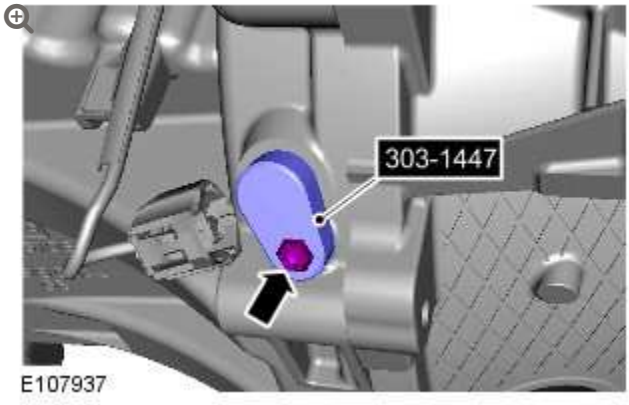

Install the special tool.

Special Tool(s): 303-1447

7.

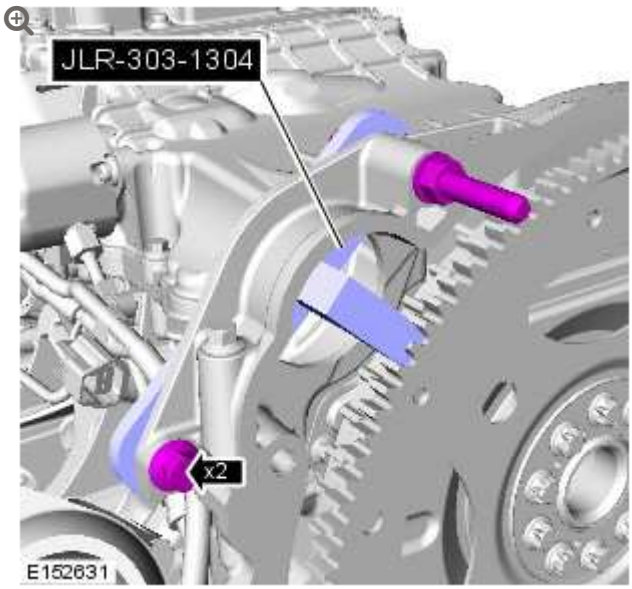

- Install the special tool.
- *Special Tool(s):* JLR-303-1304

8.

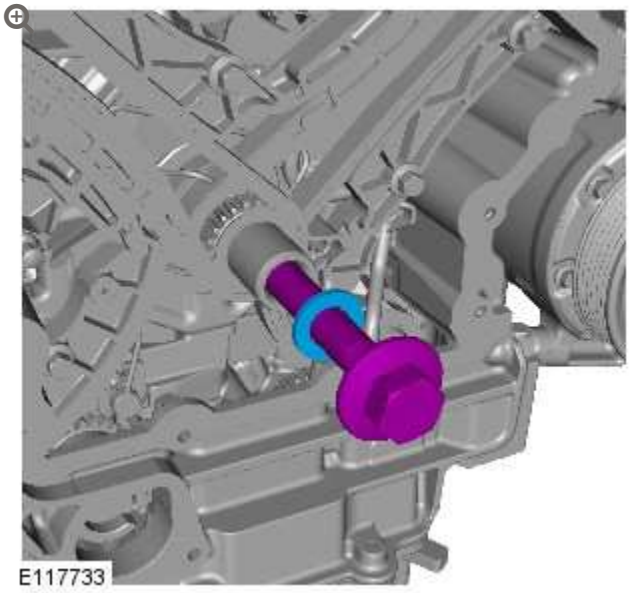

Remove the crankshaft pulley bolt.

9.

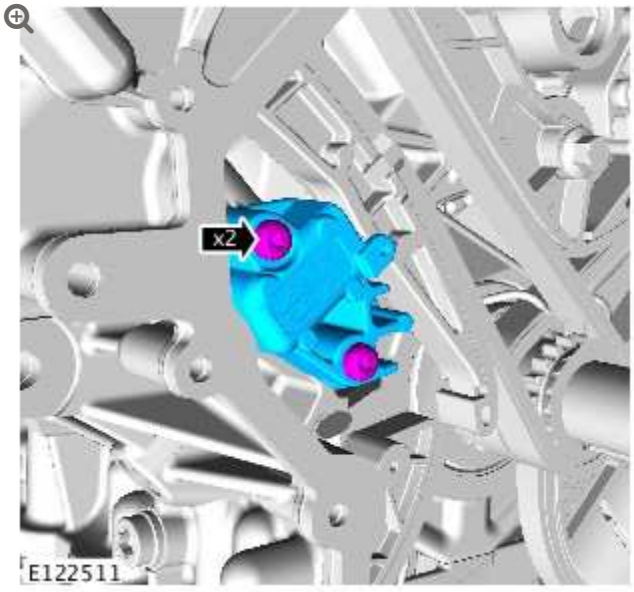

Remove the timing chain tensioner.

10.

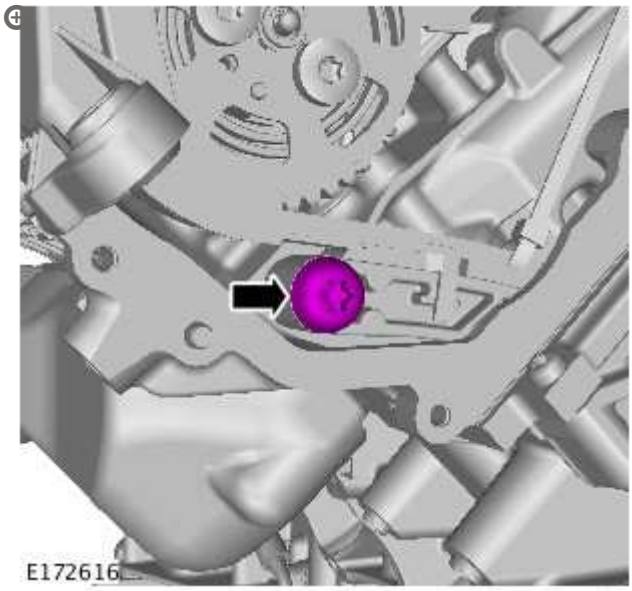

11.

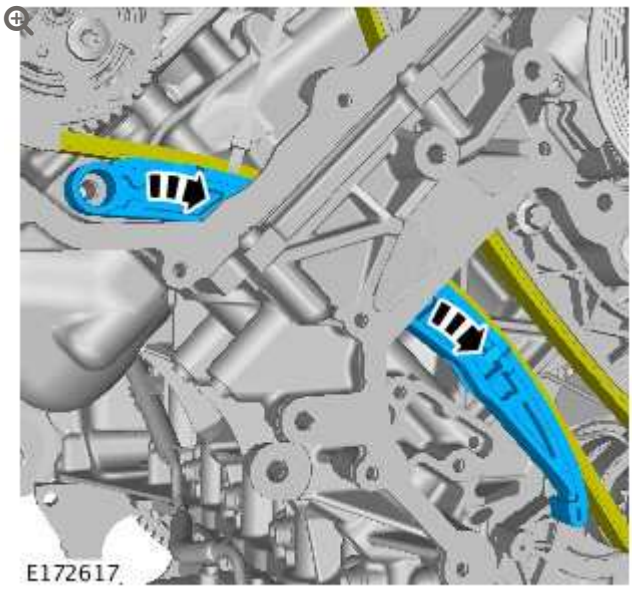

12.

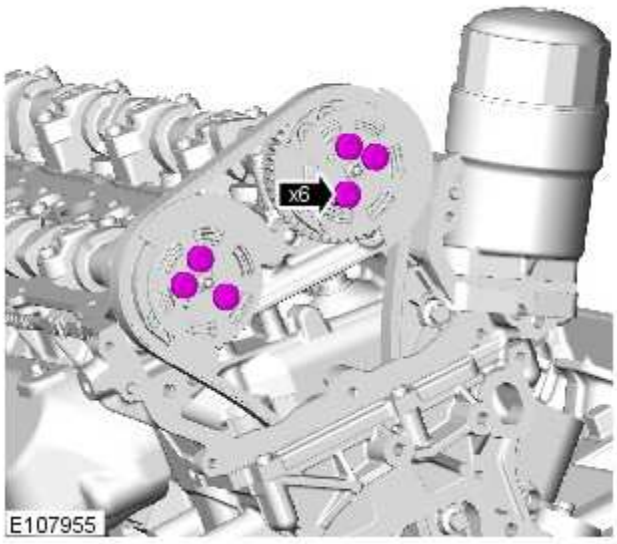

13.

CAUTION:

If the variable valve timing (VVT) units are knocked or dropped then new VVT(s) must be installed.

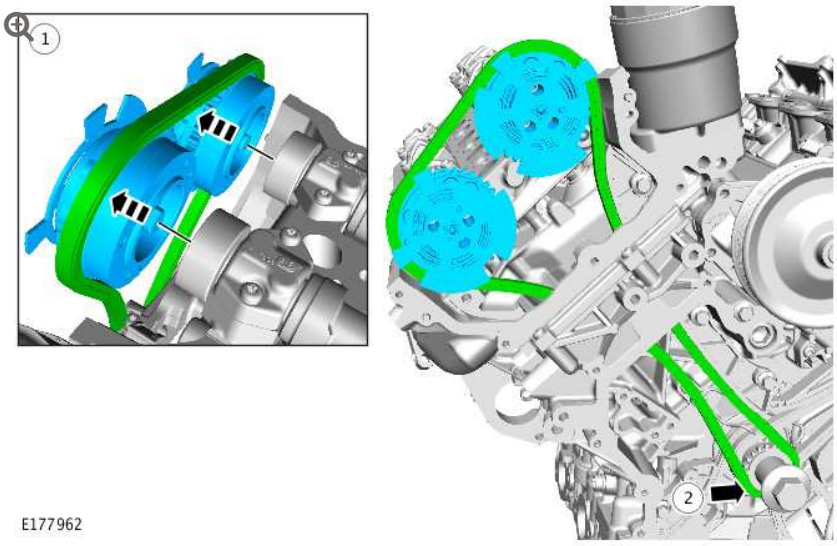

Remove the timing chain and VVT units.

14.

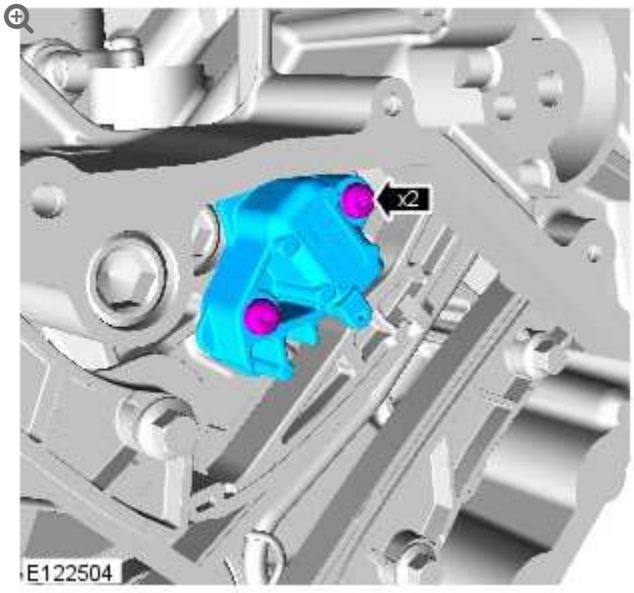

Remove the timing chain tensioner.

15.

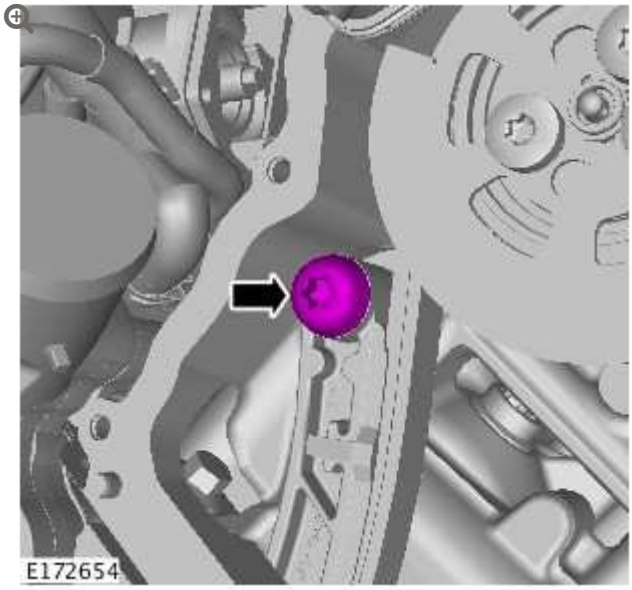

16.

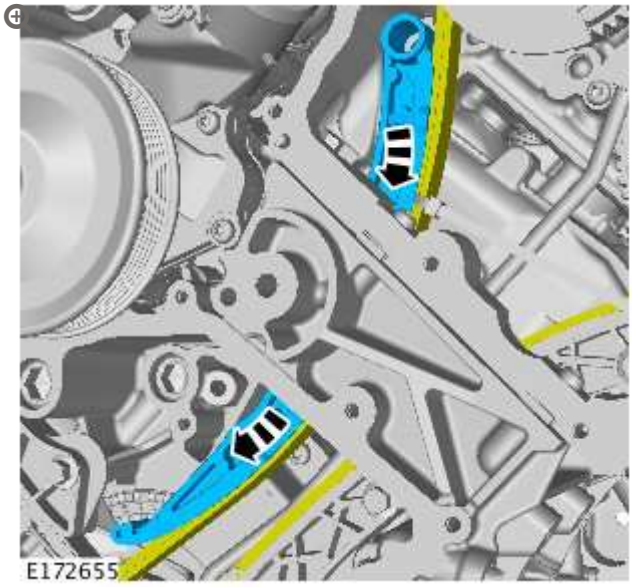

17.

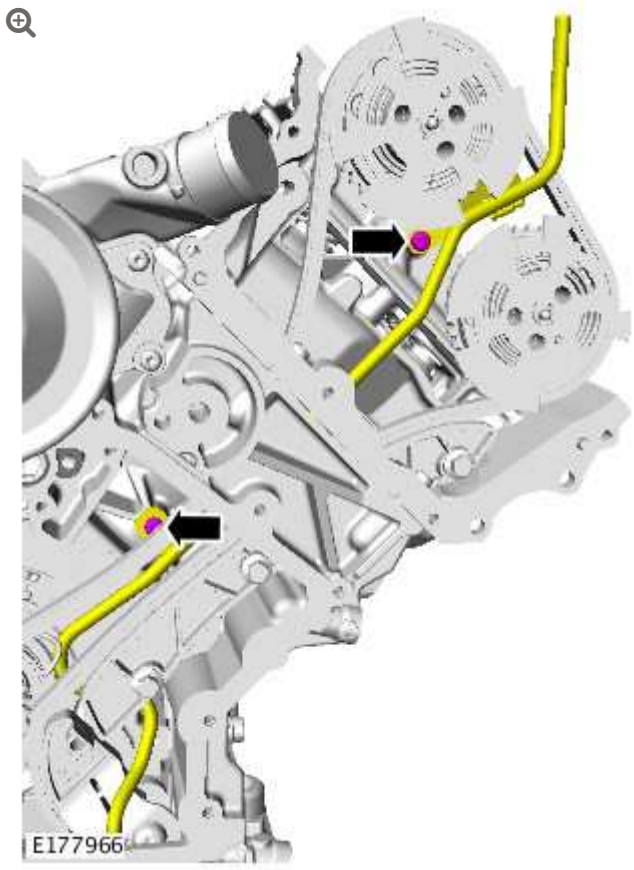

Release the oil drain tube.

18.

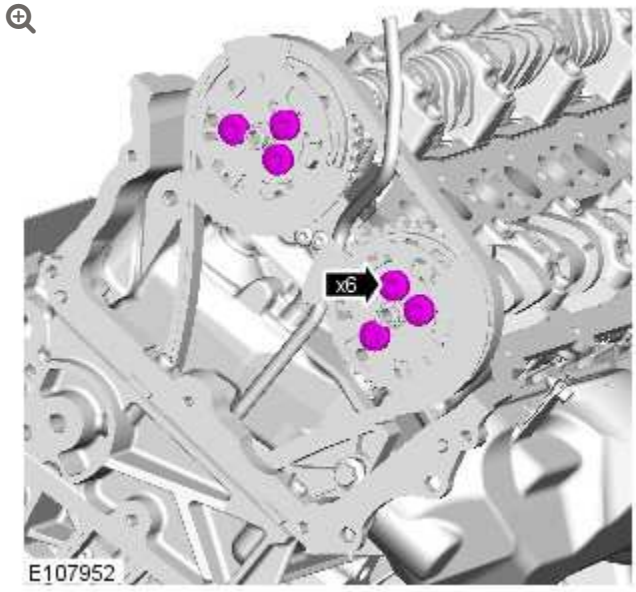

19.

CAUTION:

If the VVT is knocked or dropped then new VVT(s) must be installed.

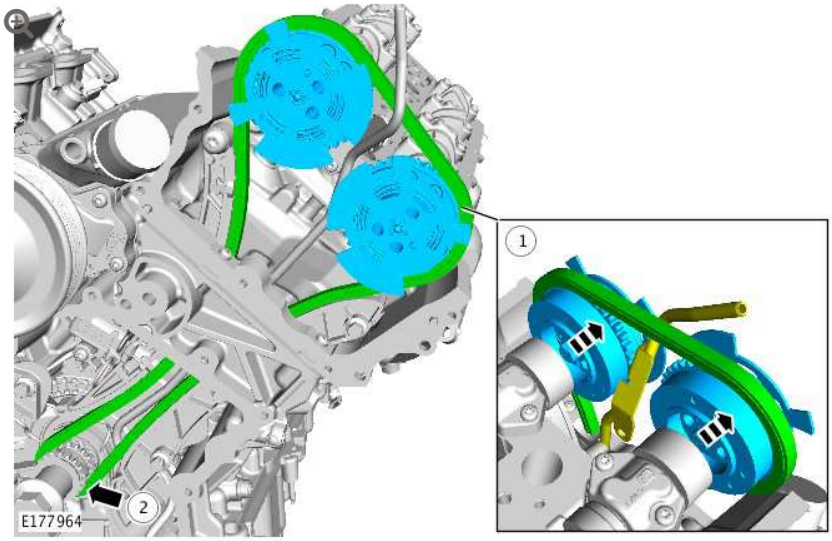

Remove the timing chain with the VVT units.

20.

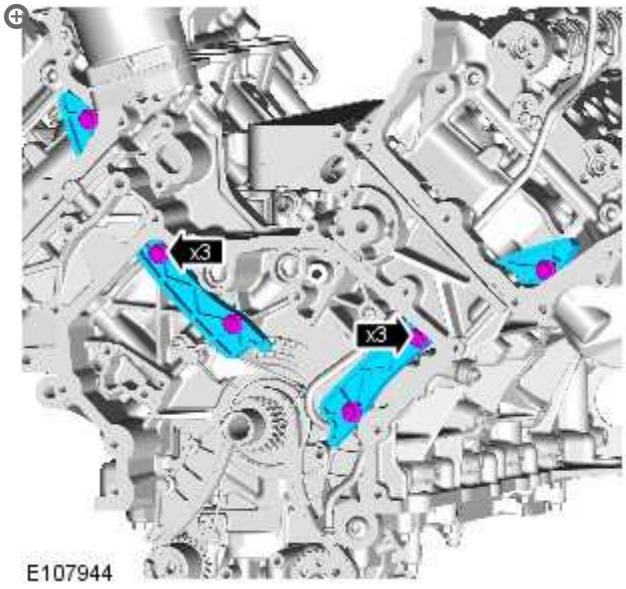

21.

CAUTION:

Discard the friction washer.

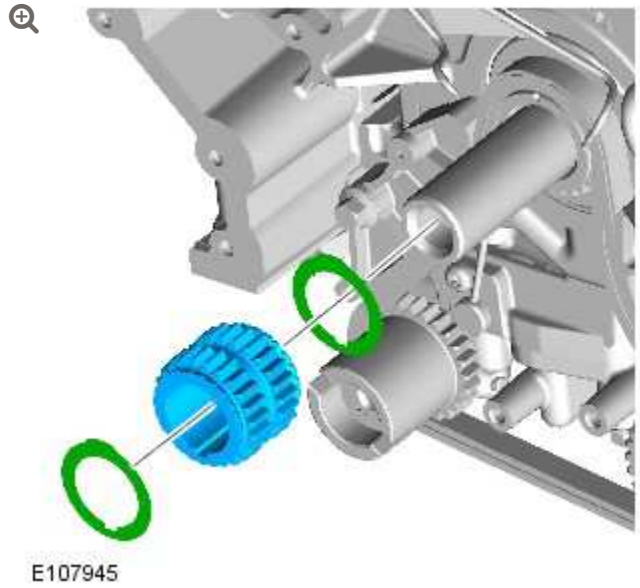

E107945

INSTALLATION

1.

CAUTION:

Install a new friction washer.

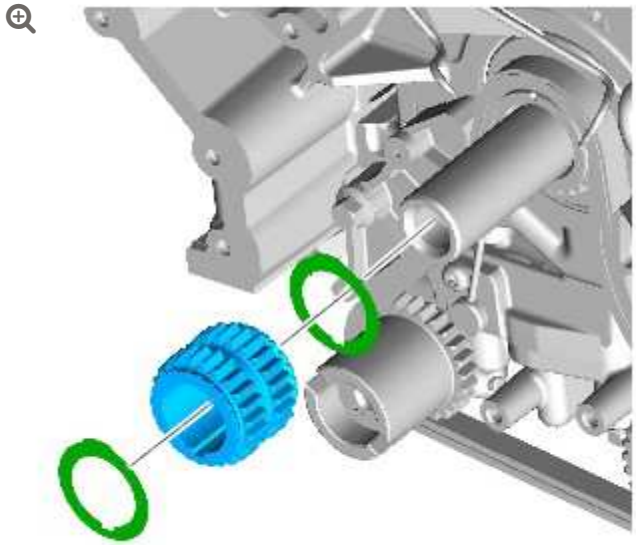

E107945

2.

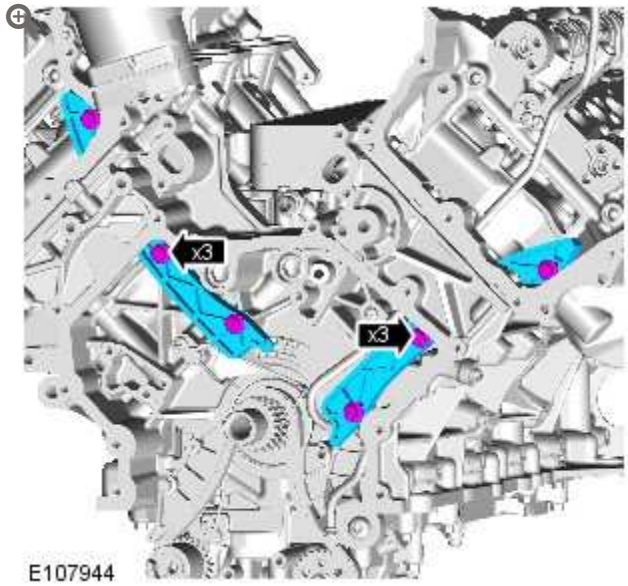

E107944

Torque: **12 Nm**

3.

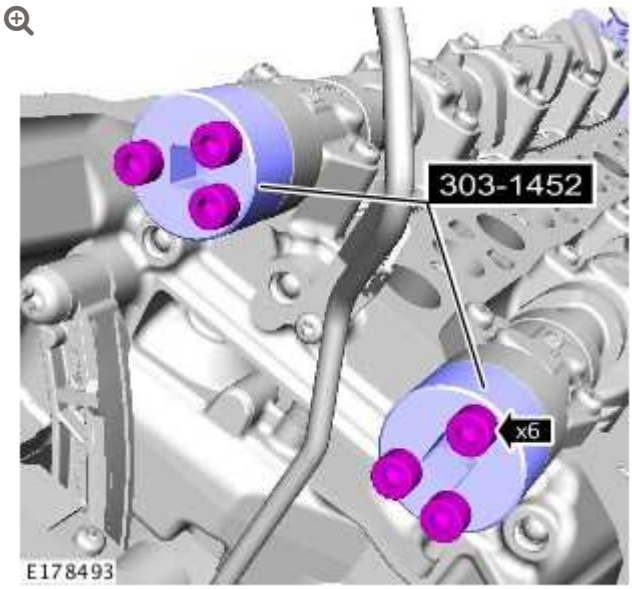

- Install the special tool to each Camshaft.
- *Special Tool(s):* 303-1452
- *Torque:* **10 Nm**

4.



- Carefully rotate the camshafts if the position is not as shown.

5.

CAUTIONS:

- Do not overturn the camshafts.
- Tighten the wing nuts finger tight. Failure to follow this instruction may result in damage to the components.

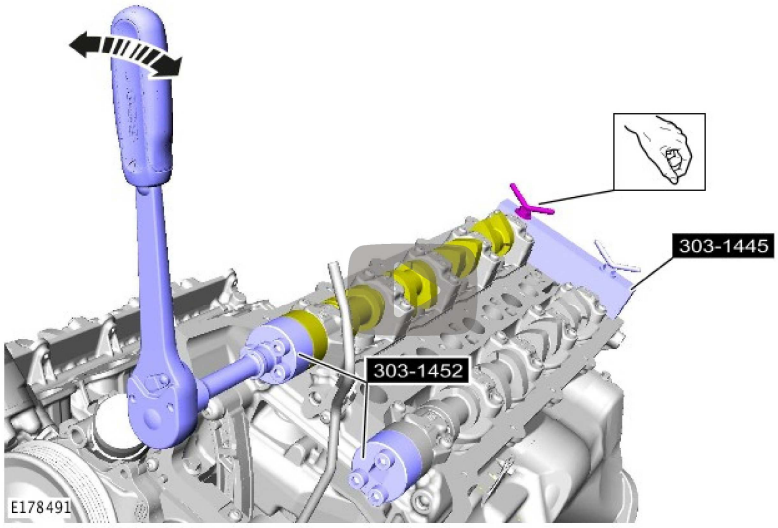

- *Special Tool(s):* 303-1452
- Using a suitable tool, carefully rock the camshaft clockwise then anti-clockwise. Turn the special tool locking nuts until there is no movement left in camshafts. Repeat this step for both camshafts.

6.

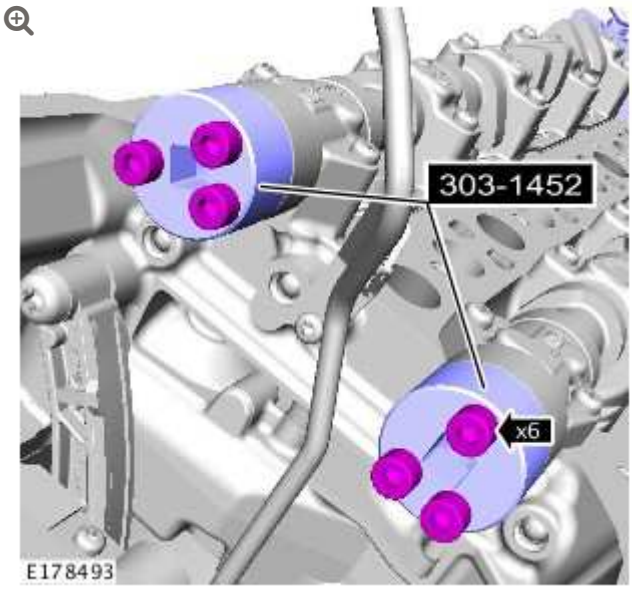

- Remove the special tool from each Camshaft.
- *Special Tool(s):* 303-1452

7.

CAUTIONS:

- Do not allow the camshaft to rotate.
- If the VVT is knocked or dropped then new VVT(s) must be installed.

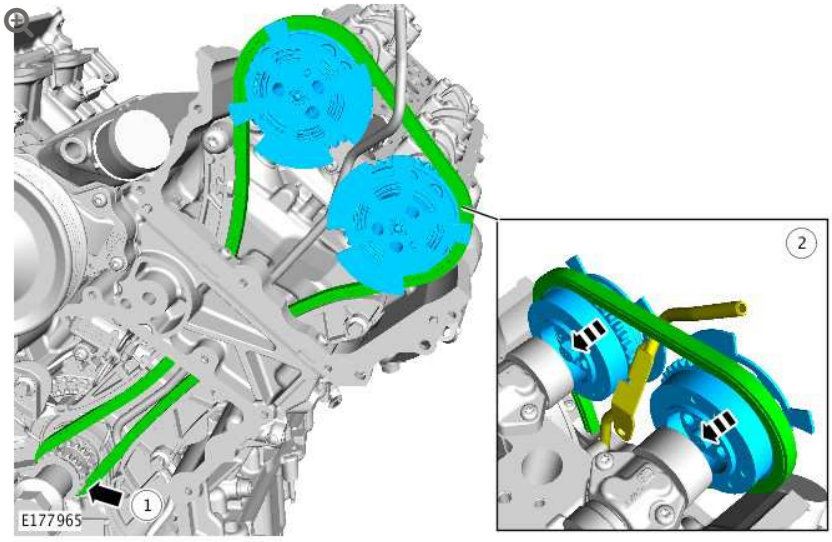

- Install the timing chain with the VVT units.

8.

NOTE:

Install the bolts finger tight at this stage.

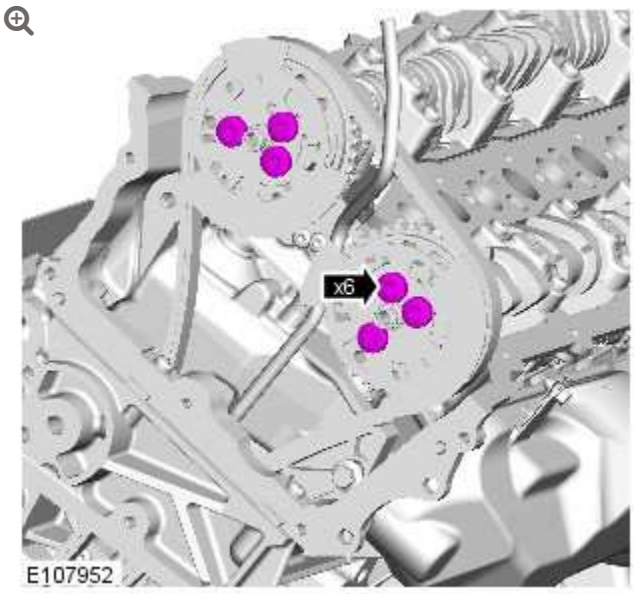

9.

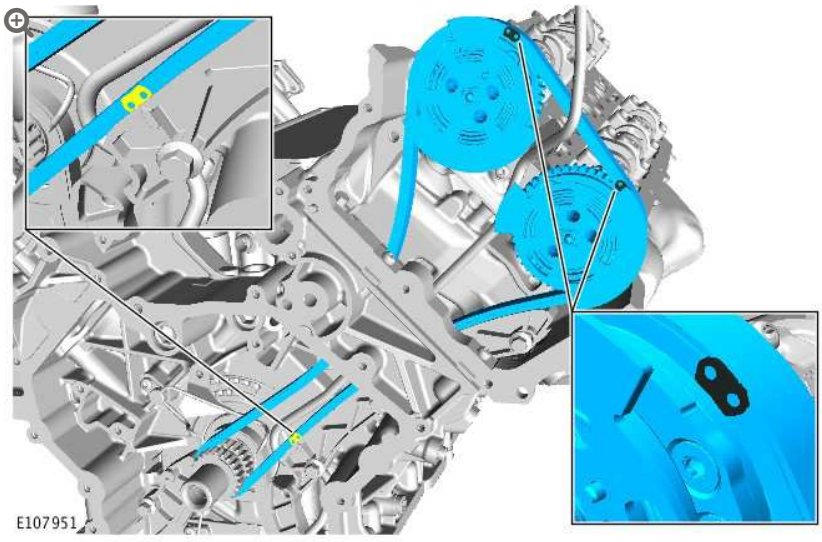

- Make sure that all the timing chain alignment marks are in the positions shown.

10.

CAUTIONS:

- If the vehicle is Installed with components shown in section 1 of the illustration, these must be replaced with components shown in section (2).
- Do not attempt to install the components shown in section 1 of the illustration, as damage to the engine may occur.

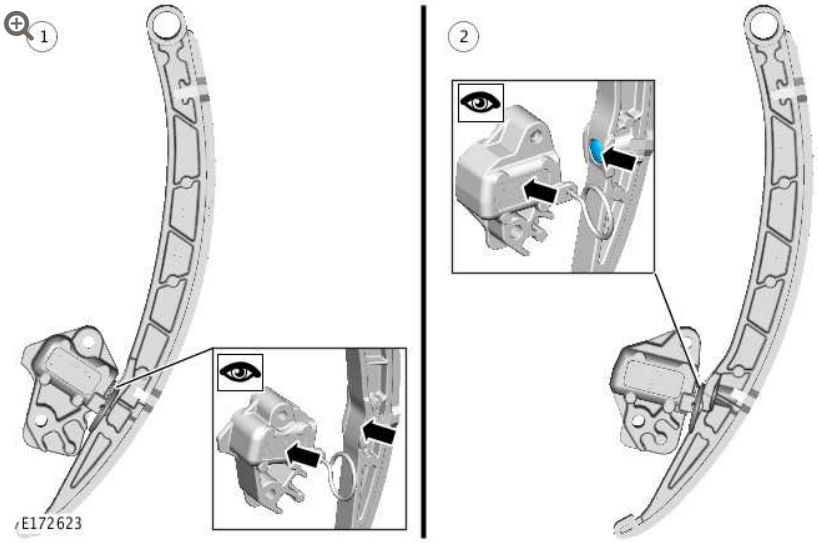

Using the illustration, identify which timing chain tensioner and guide is currently installed to the vehicle. Make sure the vehicle is assembled using components shown in section (2) of the illustration only.

11.

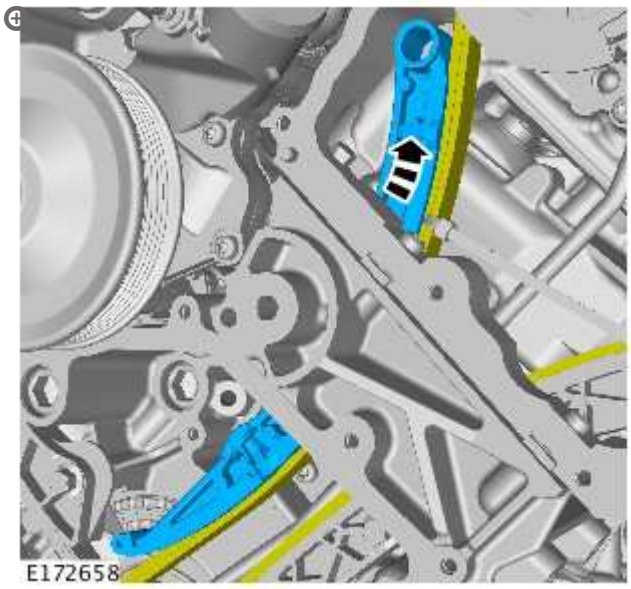

12.

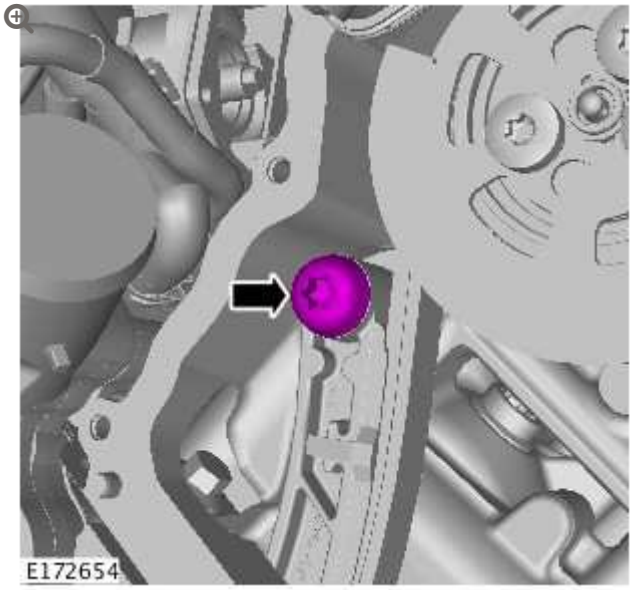

Torque: **25 Nm**

13.

CAUTIONS:

- If the vehicle is Installed with components shown in section 1 of the illustration, these must be replaced with components shown in section (2).
- Do not attempt to install the components shown in section 1 of the illustration, as damage to the engine may occur.

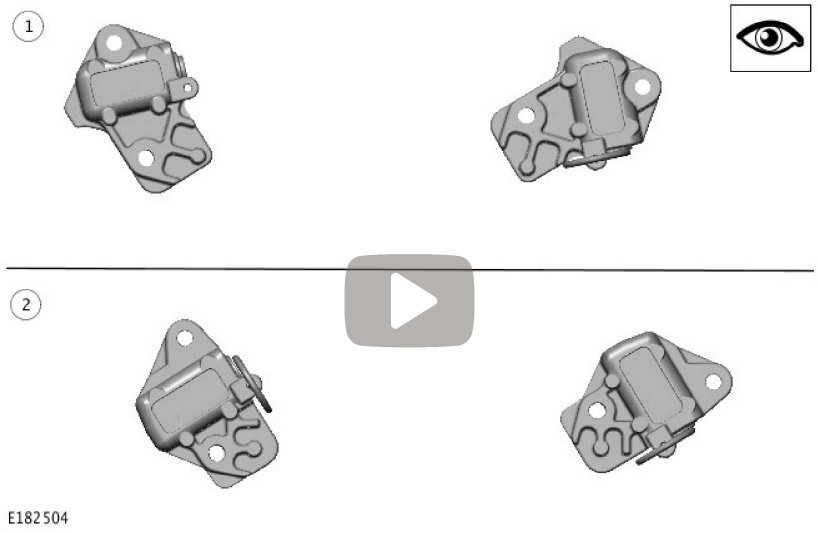

Before installing the timing chain tensioners, use the illustration shown to identify which timing chain tensioner is currently fitted to the vehicle. Make sure the vehicle is assembled using components shown in section (2) of the illustration only. If a new timing chain tensioner is installed, do not deploy the tensioner pin and proceed to the next step. If the tensioner to be installed has previously been deployed, make sure the attached animation is followed to make sure the tensioner is set correctly, failure to do this may result in damage to the engine.

CAUTION:

Do not release the timing chain tensioner locking pin at this stage.

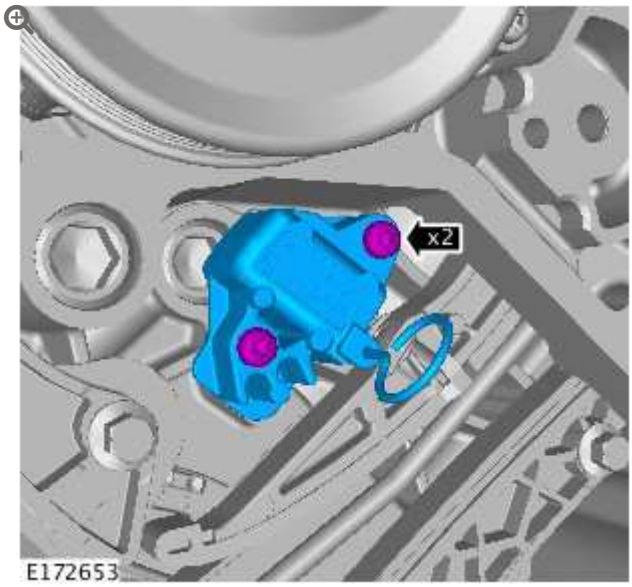

Install the timing chain tensioner.

Torque: **12 Nm**

15.

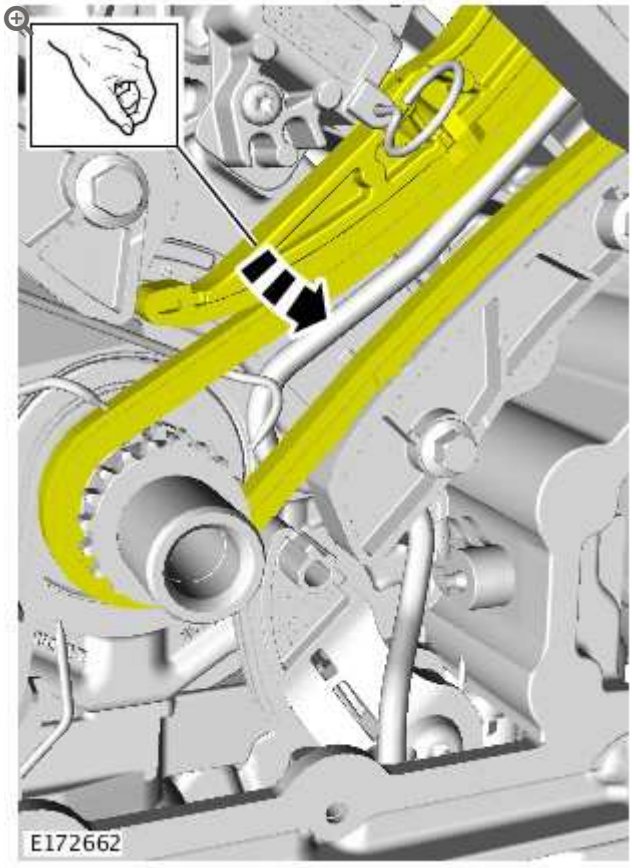

Apply and maintain tension on the component.

16.

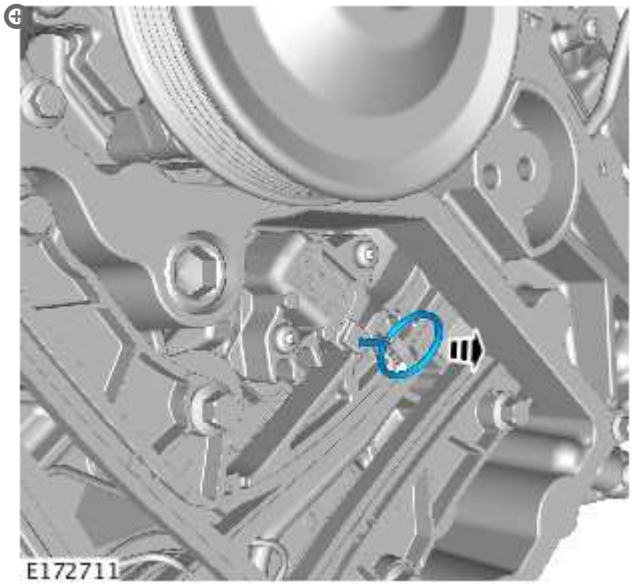

Release the retaining pin.

17.

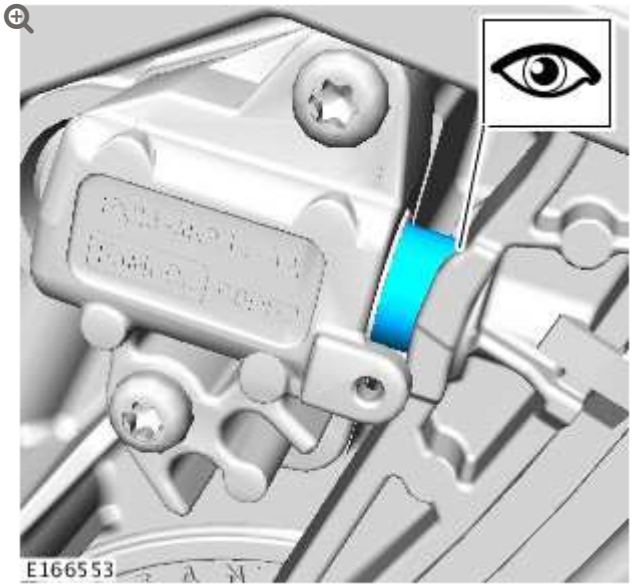

The piston should apply tension to the timing chain guide.

18.

CAUTION:

Make sure the tension is maintained.

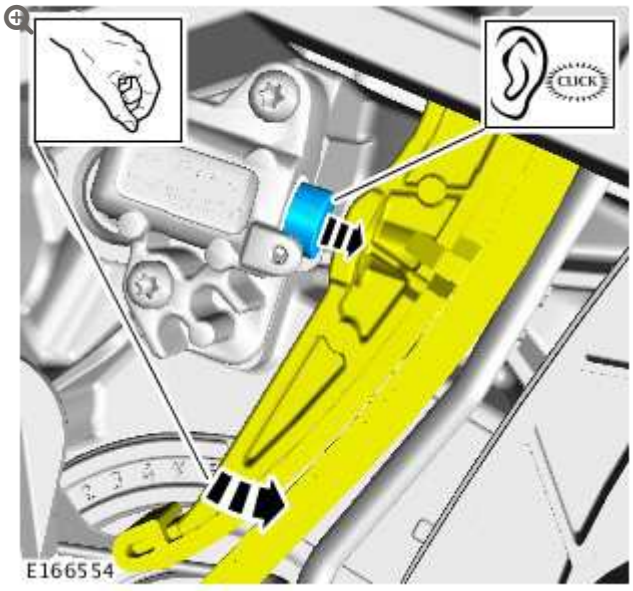

Using considerable force, move the timing chain guide away from the tensioner to allow the first stage ratchet mechanism to be applied.

19.

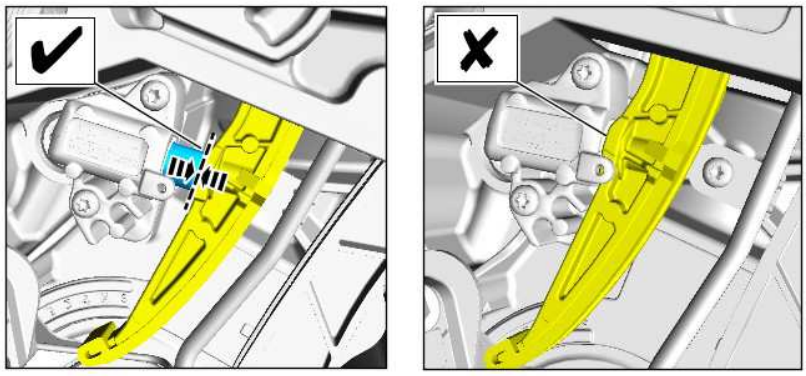

E166556

If the piston can be pushed back, the tensioner is not correct. Repeat steps 13-17.

20.

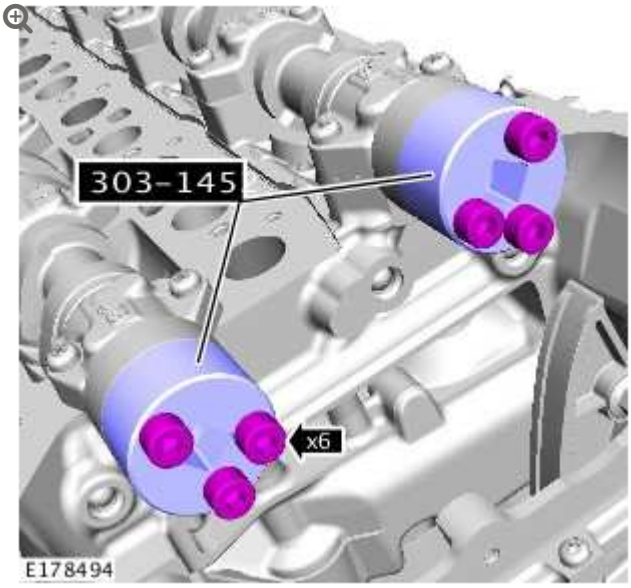

- Install the special tool to each Camshaft.
- *Special Tool(s):* 303-1452
- *Torque:* **10 Nm**

21.



- **CAUTION:**

  Do not overturn the camshafts.

  Carefully rotate the camshafts if the position is not as shown.

22. **CAUTIONS:**

    - Do not overturn the camshafts.
    - Tighten the wing nuts finger tight. Failure to follow this instruction may result in damage to the components.

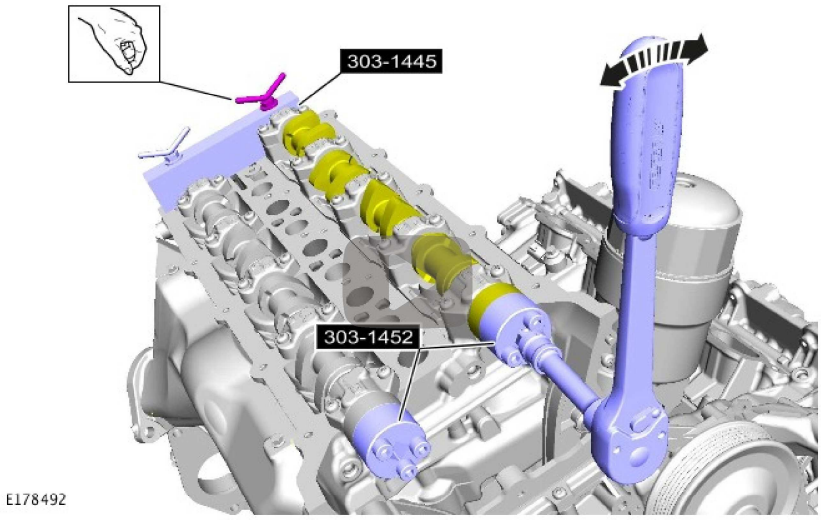

- *Special Tool(s):* 303-1452
- Using a suitable tool, carefully rock the camshaft clockwise then anti-clockwise. Turn the special tool locking nuts until there is no movement left in camshafts. Repeat this step for both camshafts.

23.

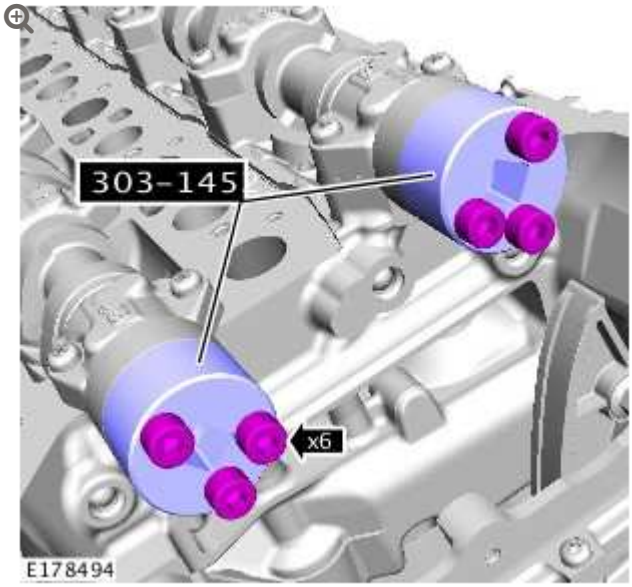

- Remove the special tool from each Camshaft.
- *Special Tool(s):* 303-1452

24. **CAUTIONS:**

- Do not allow the camshafts to rotate.
- If the VVT is knocked or dropped then new VVT(s) must be installed.

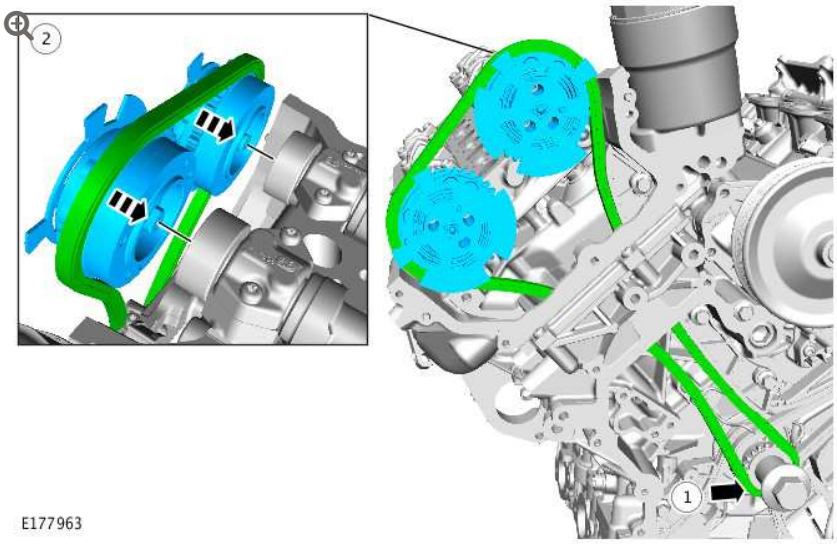

- Install the timing chain with the VVT units.

25. **NOTE:**

Install the bolts finger tight at this stage.

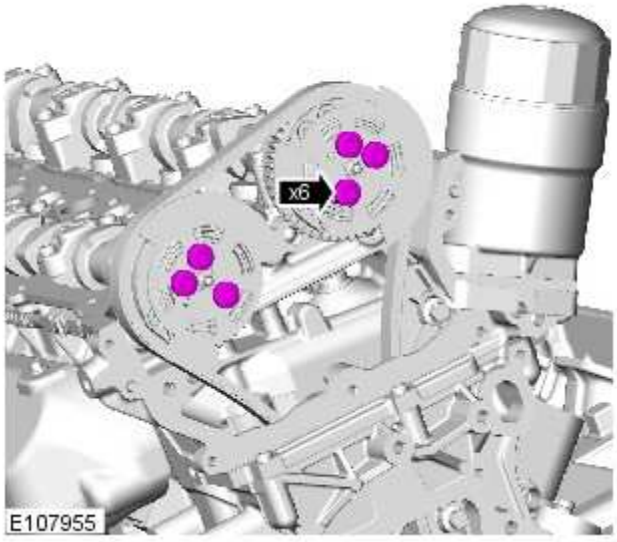

26.

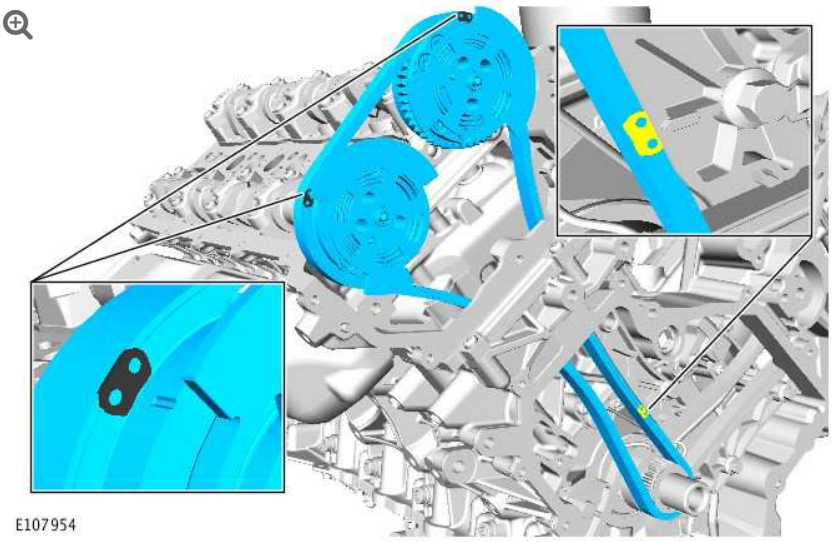

- Make sure that all the timing chain alignment marks are in the positions shown.

27.

CAUTIONS:

- If the vehicle is Installed with components shown in section 1 of the illustration, these must be replaced with components shown in section (2).
- Do not attempt to install the components shown in section 1 of the illustration, as damage to the engine may occur.

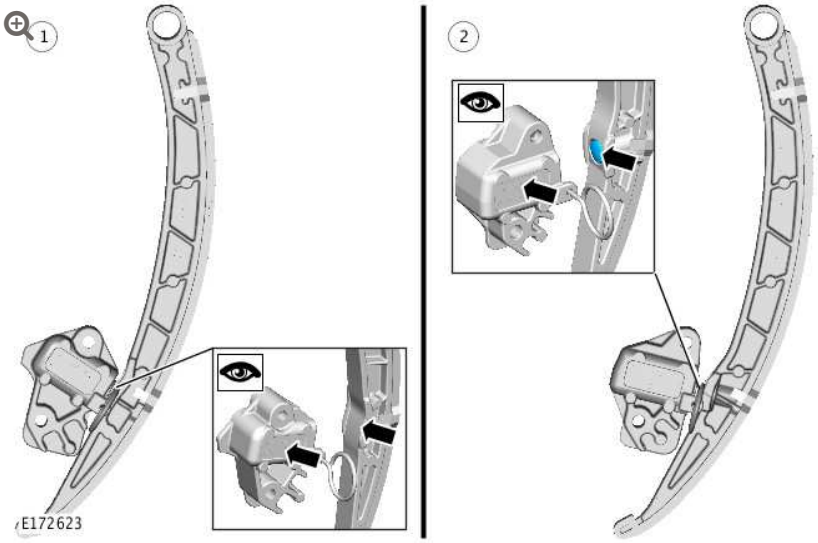

Using the illustration, identify which timing chain tensioner and guide is currently installed to the vehicle. Make sure the vehicle is assembled using components shown in section (2) of the illustration only.

28.

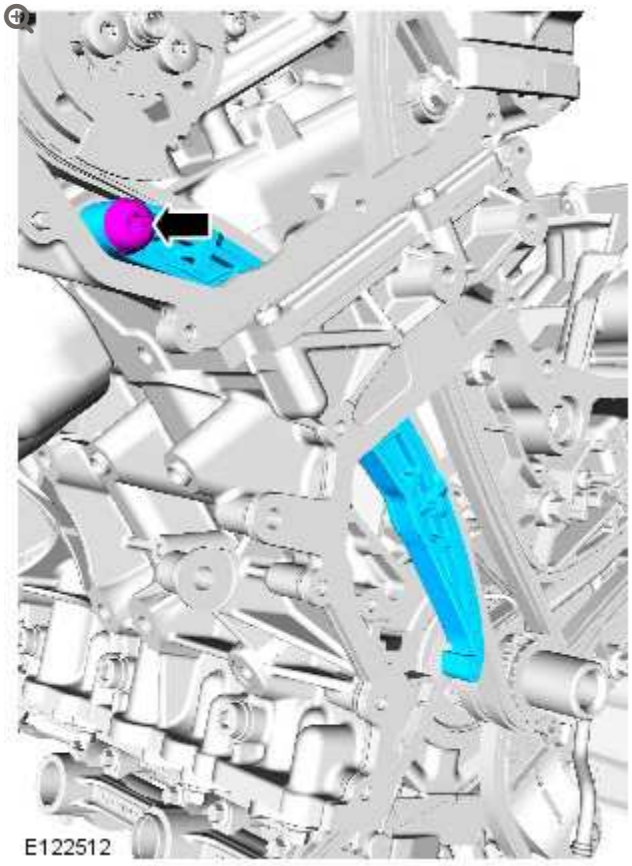

Torque: **25 Nm**

29.

CAUTIONS:

- If the vehicle is Installed with components shown in section 1 of the illustration, these must be replaced with components shown in section (2).
- Do not attempt to install the components shown in section 1 of the illustration, as damage to the engine may occur.

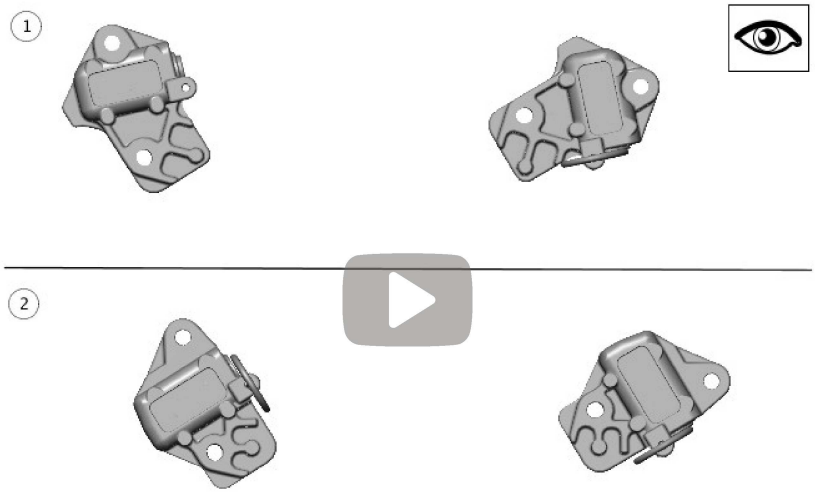

Before installing the timing chain tensioners, use the illustration shown to identify which timing chain tensioner is currently fitted to the vehicle. Make sure the vehicle is assembled using components shown in section (2) of the illustration only. If a new timing chain tensioner is installed, do not deploy the tensioner pin and proceed to the next step. If the tensioner to be installed has previously been deployed, make sure the attached animation is followed to make sure the tensioner is set correctly, failure to do this may result in damage to the engine.

30.

CAUTION:

Do not release the timing chain tensioner locking pin at this stage.



Before installing the timing chain tensioners, make sure the attached animation is followed to ensure the tensioner is set correctly, failure to do this may result in damage to the engine.

Torque: **12 Nm**

31.

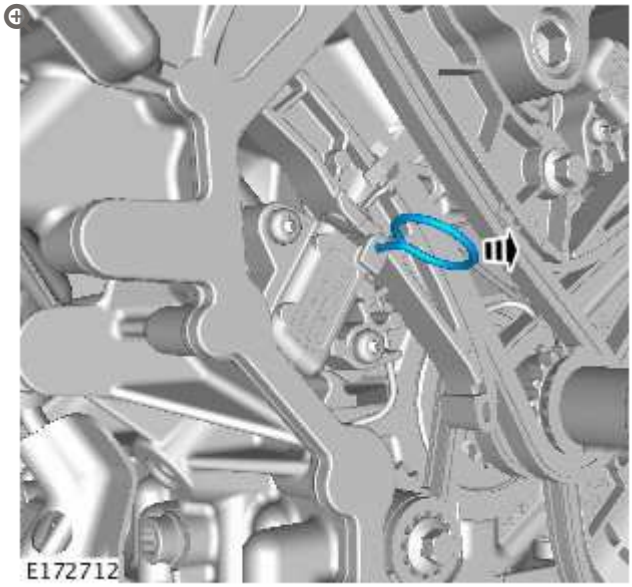

6. Release the retaining pin..

32.

NOTE:

Left hand illustration shown, Right hand is similar.

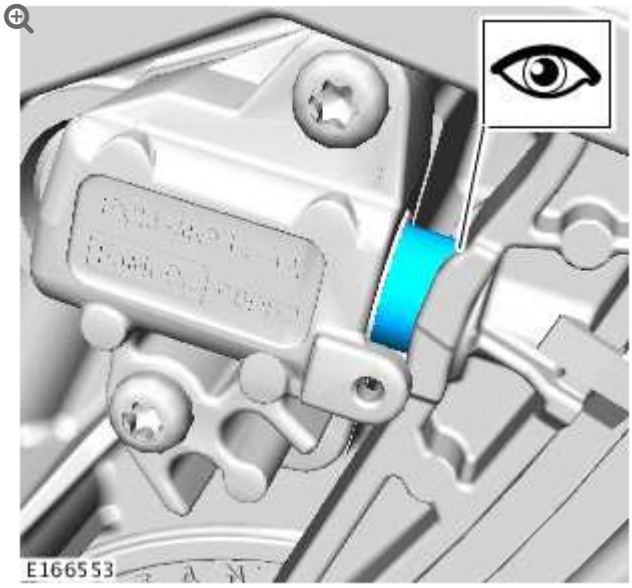

The piston should apply tension to the timing chain guide.

33.

CAUTION:

Make sure the tension is maintained.

NOTE:

Left hand illustration shown, Right hand is similar.

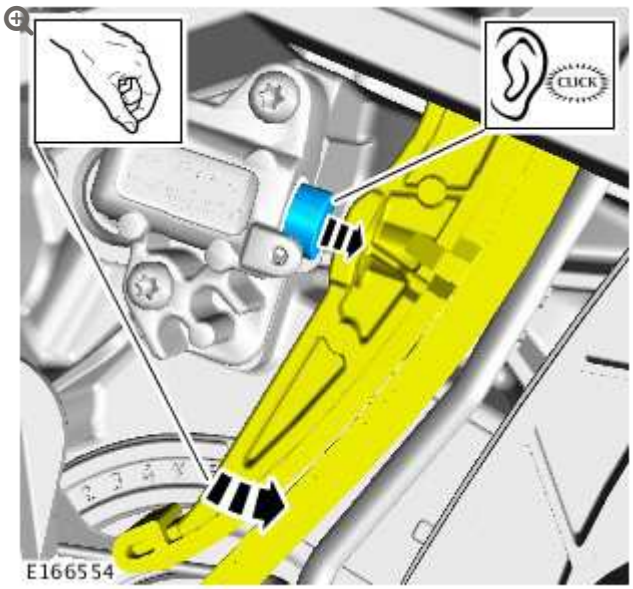

Using considerable force, move the timing chain guide away from the tensioner to allow the first stage ratchet mechanism to be applied.

34.

NOTE:

Left hand illustration shown, Right hand is similar.

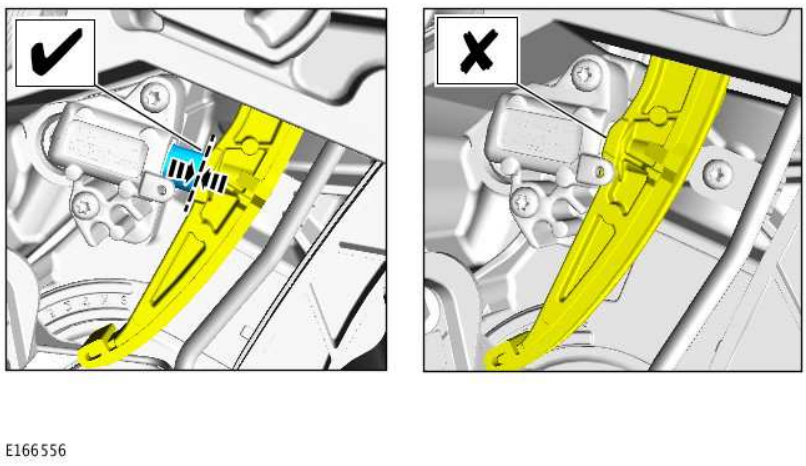

If the piston can be pushed back, the tensioner is not correct. Repeat steps 27-31.

35.

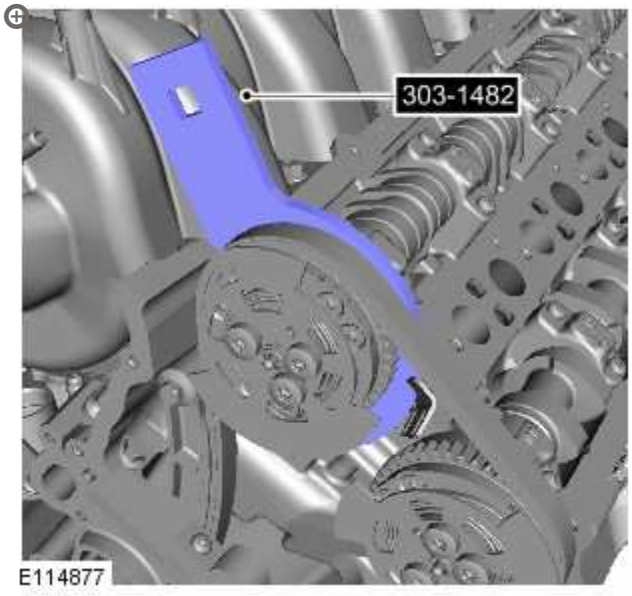

- Install the special tool.
- *Special Tool(s):* 303-1482

36.

CAUTIONS:

- Apply the torque to the end of the special tool.
- Make sure that the torque wrench is aligned with the special tool as illustrated in the graphic.

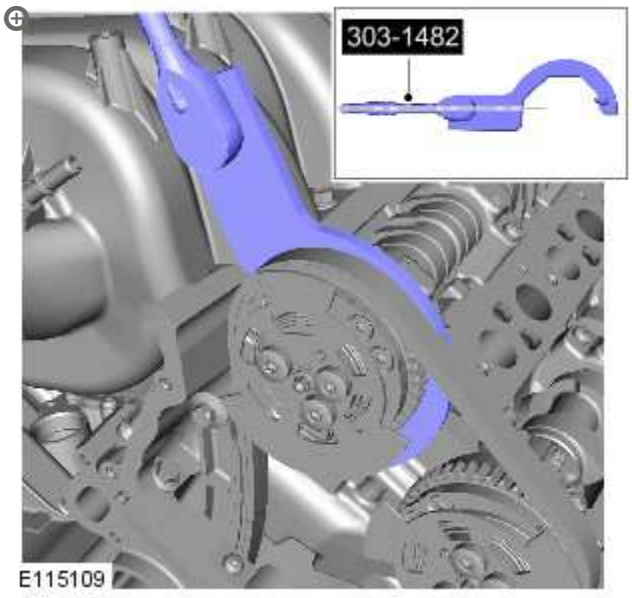

- Install the torque wrench to the special tool.
- *Torque:* **35 Nm**

37.

CAUTION:

Make sure that the torque wrench does not move whilst tightening the VVT bolts.

NOTE:

Make sure to tighten the exhaust VVT unit bolts first.

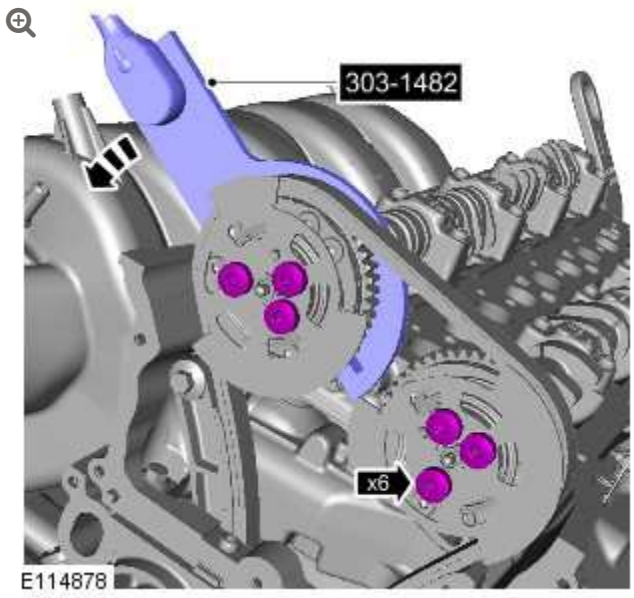

1. *Torque:* **32 Nm**
2. *Special Tool(s):* 303-1482

38.

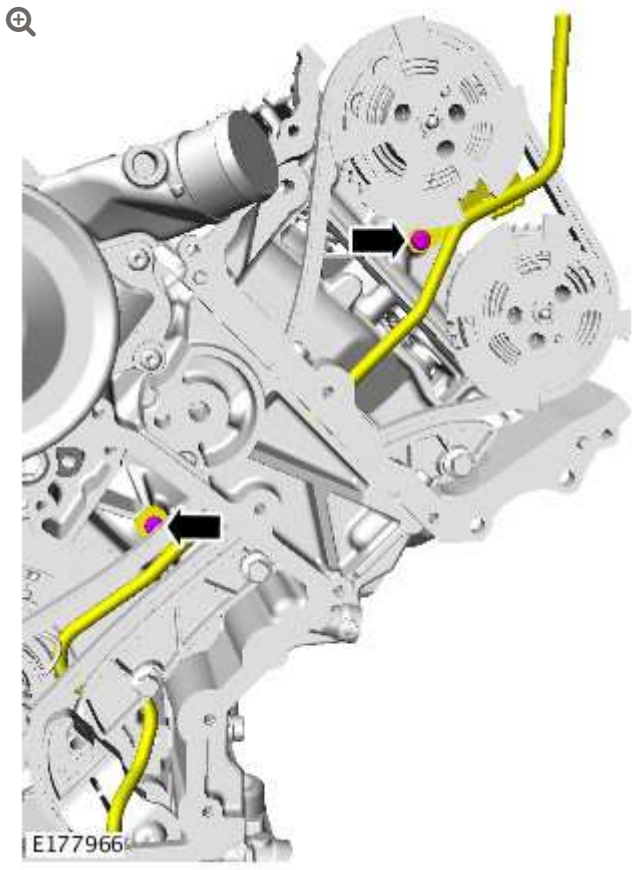

Install the oil drain tube.

Torque: **10 Nm**

39.

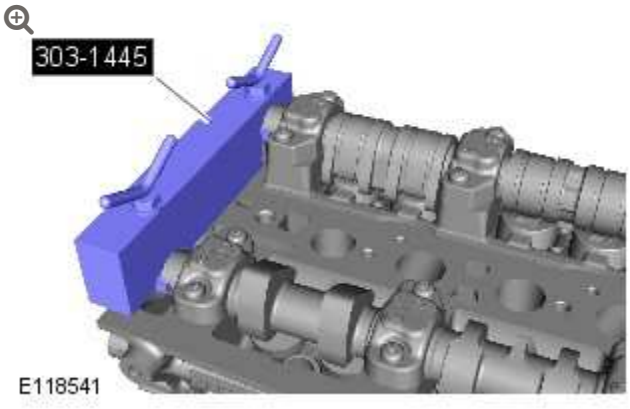

- Remove the special tool.
- *Special Tool(s):* 303-1445

40.

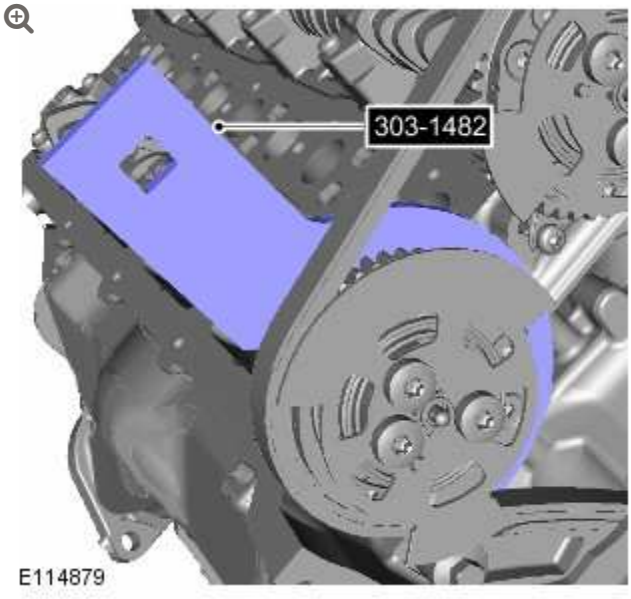

- Install the special tool.
- *Special Tool(s):* 303-1482

41.

CAUTIONS:

- Apply the torque to the end of the special tool.
- Make sure that the torque wrench is aligned with the special tool as illustrated in the graphic.

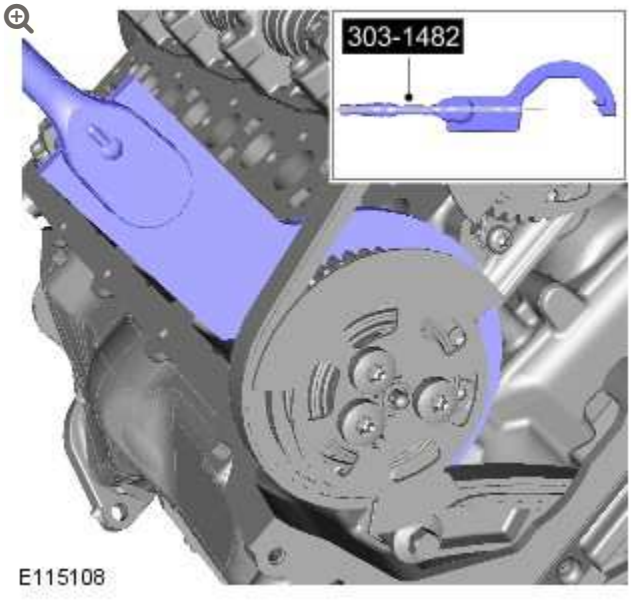

- Install the torque wrench to the special tool.
- *Torque:* **35 Nm**

42.

CAUTION:

Make sure that the torque wrench does not move whilst tightening the VVT bolts.

NOTE:

Make sure to tighten the inlet VVT unit bolts first.

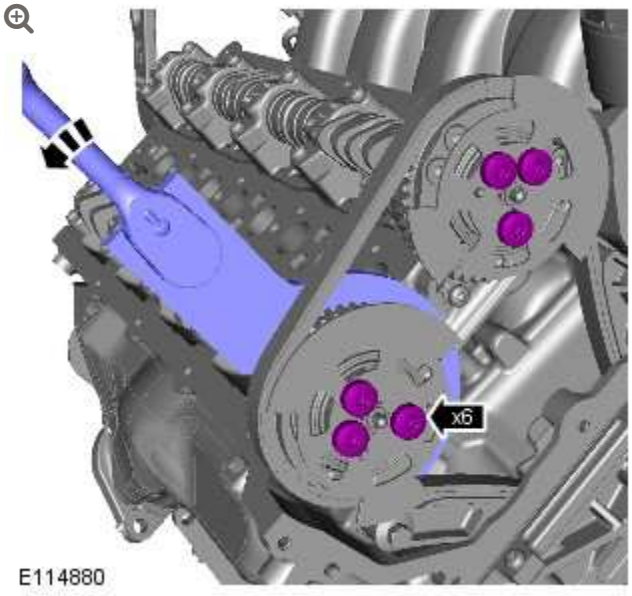

Torque: **32 Nm**

43.

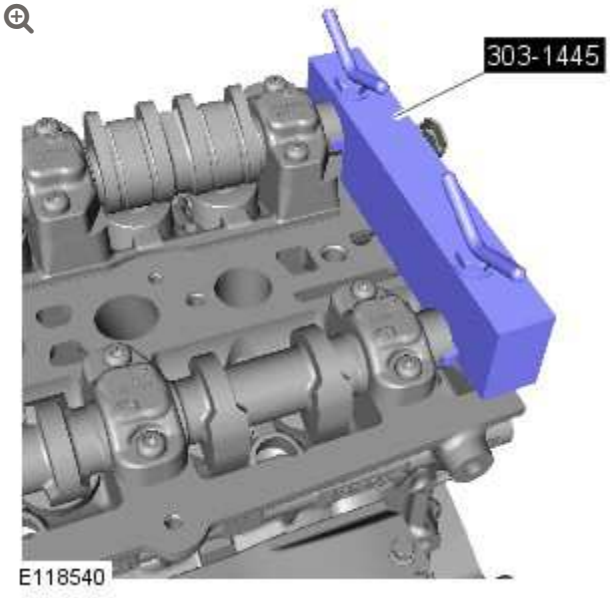

- Remove the special tool.
- *Special Tool(s):* 303-1445

44.

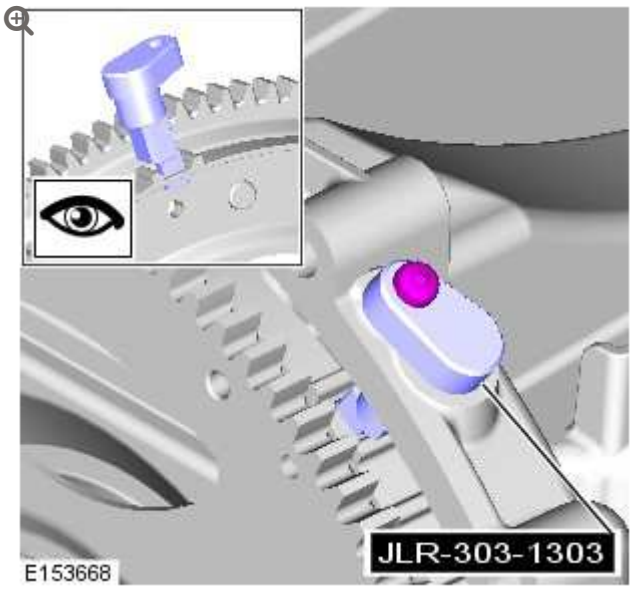

- Remove the special tool.
- *Special Tool(s):* JLR-303-1303

45.

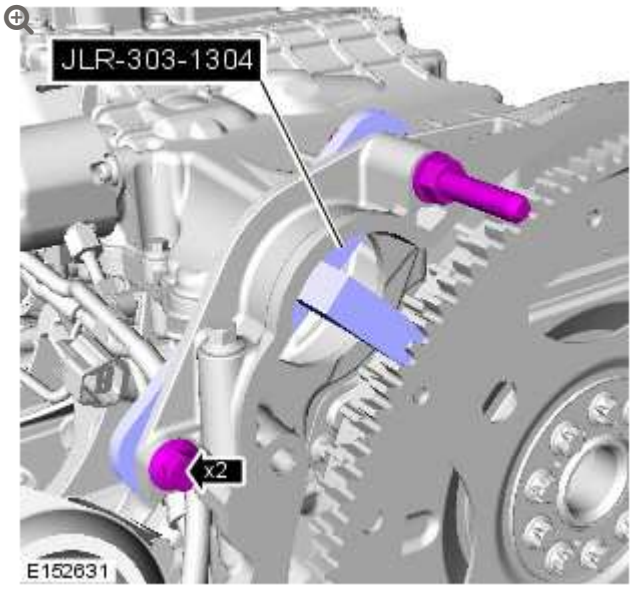

- Remove the special tool.
- *Special Tool(s):* JLR-303-1304

46.

CAUTION:

An M16 washer must be used to prevent damage to the crankshaft on installation.

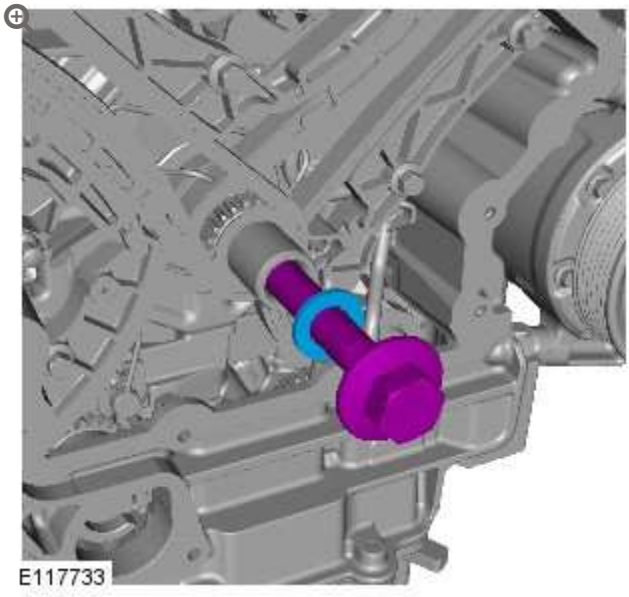

Install the crankshaft pulley bolt.
Torque: **20 Nm**

47. Rotate the engine two complete turns clockwise.

48. **CAUTION:**

Only rotate the crankshaft clockwise.

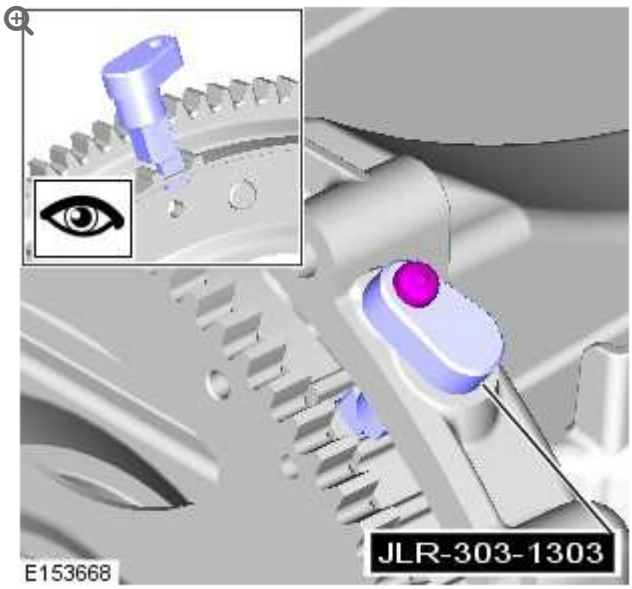

Make sure that the special tool is correctly located.

Special Tool(s): JLR-303-1303

49.

CAUTION:

If the special tool cannot be installed, the timing chain installation steps must be repeated.

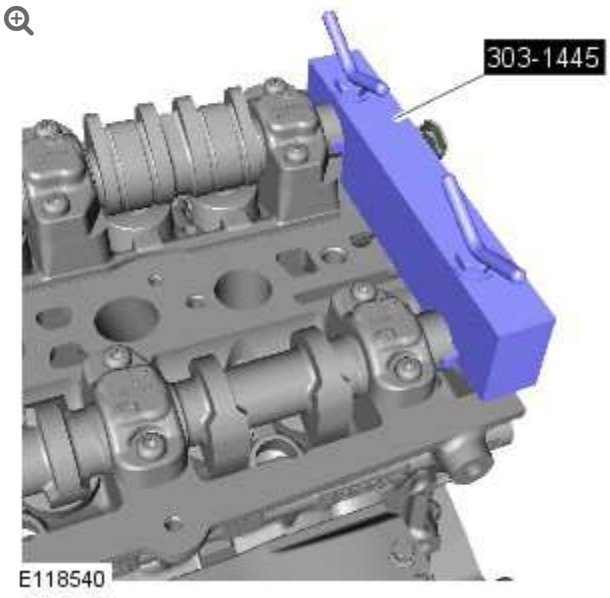

Install the special tool. If the special tool cannot be installed,

remove both timing chains and components and repeat the process from step 3 of the installation until the special tool 303-1445 is installed correctly.
Special Tool(s): 303-1445

50.

CAUTION:

If the special tool cannot be installed, the timing chain installation steps must be repeated.

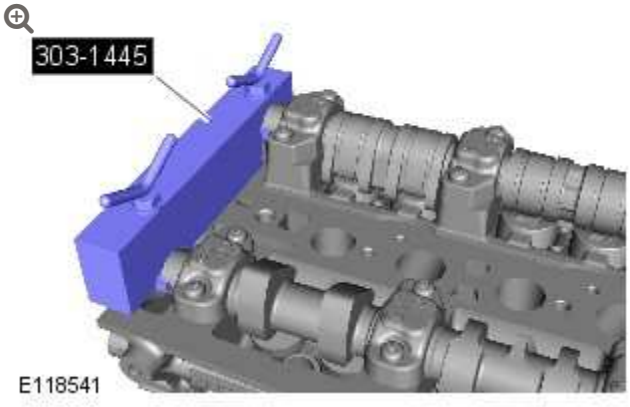

Install the special tool. If the special tool cannot be installed, remove both timing chains and components and repeat the process from step 3 of the installation until the special tool 303-1445 is installed correctly.

51.

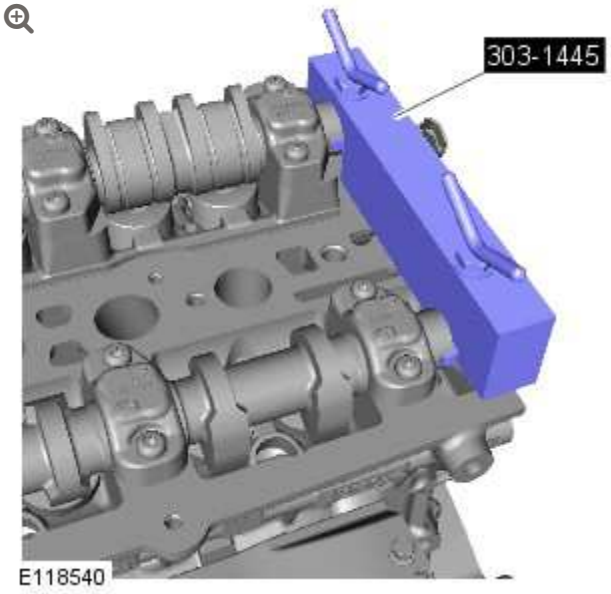

- Remove the special tool.

52.

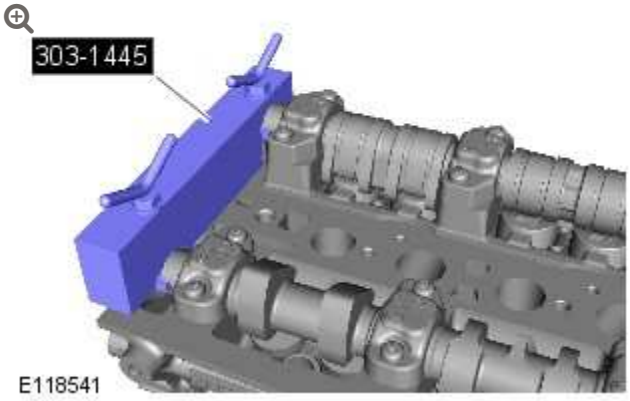

- Remove the special tool.

53.

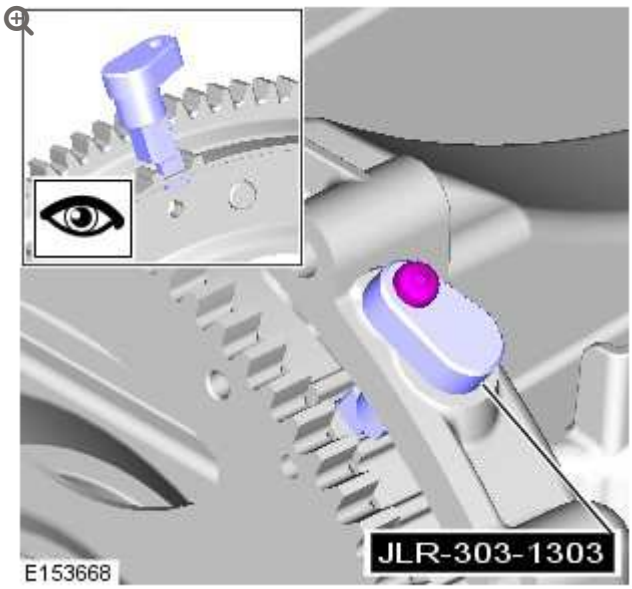

- Remove the special tool.
- *Special Tool(s):* JLR-303-1303

54.

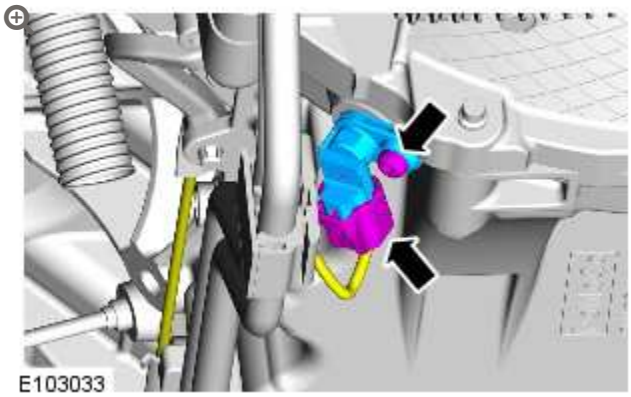

Torque: **10 Nm**

55. Refer to: Timing Cover (303-01B Engine - V8 S/C 5.0L Petrol, Removal and Installation).

56. Connect the battery ground cable.
Refer to: Specifications (414-00 Battery and Charging System - General Information, Specifications).

ENGINE – V8 S/C 5.0L PETROL

VALVE COVER LH (G1224609)

REMOVAL AND INSTALLATION

12.29.43	COVER – CAMSHAFT/ROCKER OR CYLINDER HEAD – EACH – RENEW	5000 CC, AJ V8, SUPERCHARGED	4.7	USED WITHINS	+

SPECIAL TOOL(S)



303-1446

Valve Cover Alignment Tool

REMOVAL

NOTES:

- Some variation in the illustrations may occur, but the essential information is always correct.
- Removal steps in this procedure may contain installation details.

1. Disconnect the battery ground cable.
   Refer to: Specifications (414-00, Specifications).

2. Refer to: Supercharger (303-12, Removal and Installation).

3. Refer to: Air Cleaner Outlet Pipe LH (303-12, Removal and Installation).

4. Refer to: Fuel Rail LH (303-04, Removal and Installation).

5. 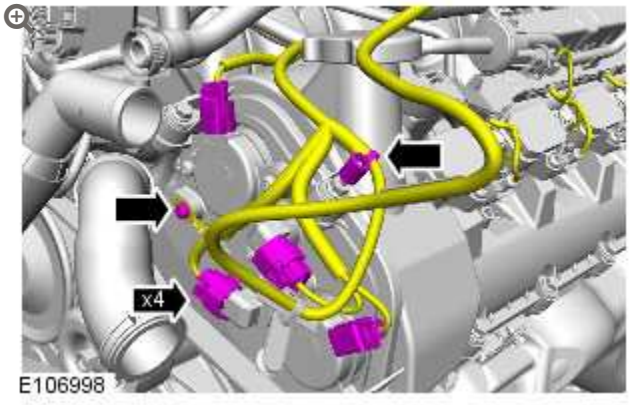

   Torque: **10 Nm**

6.

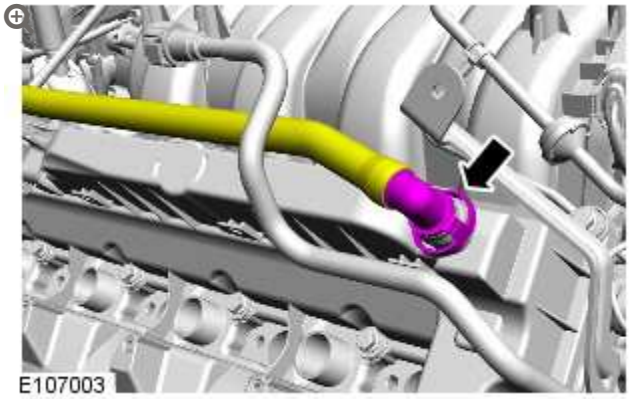

7.

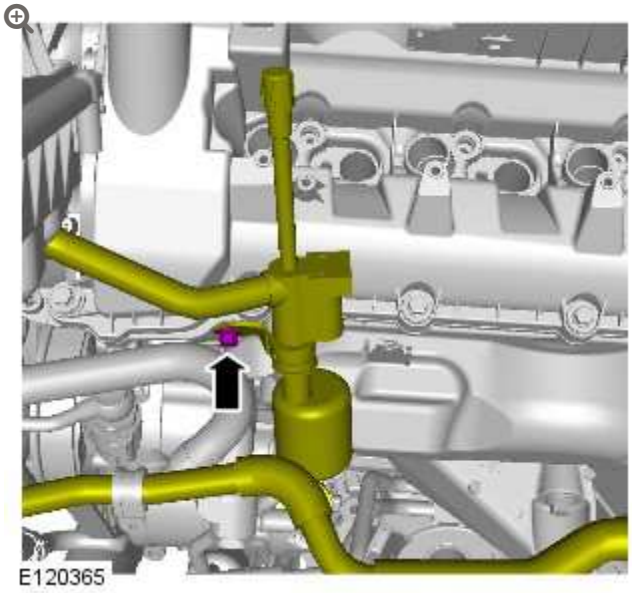

Torque: **25 Nm**

8.

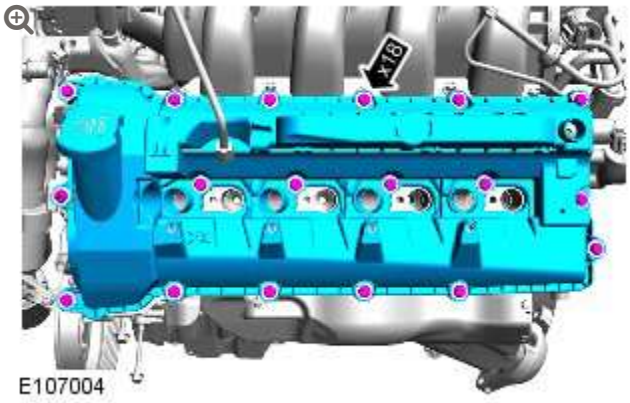

INSTALLATION

1.

CAUTIONS:

- Use only a plastic scraper when removing the sealing material.
- Use lint free cloth.
- Make sure that the mating faces are clean and free of corrosion and foreign material.
- Installation of the valve cover and tightening must be carried out within 7 minutes of applying the sealant.

NOTE:

Apply two beads of silcone gasket sealant (Loctite 5901) as shown on the illustration. The application of the sealant must be 1.5mm diameter 12mm long. Install the valve cover immediately after applying the sealant. The cover should be fitted directly to the head without smearing the sealant or the seals.

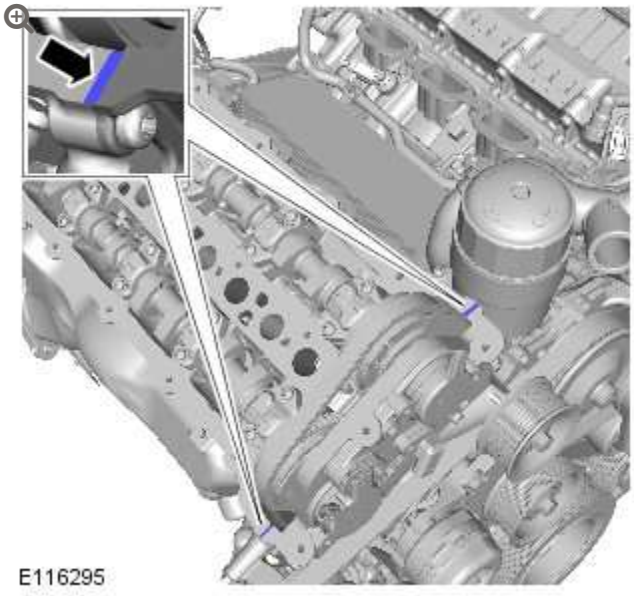

To install, reverse the removal procedure.

2.

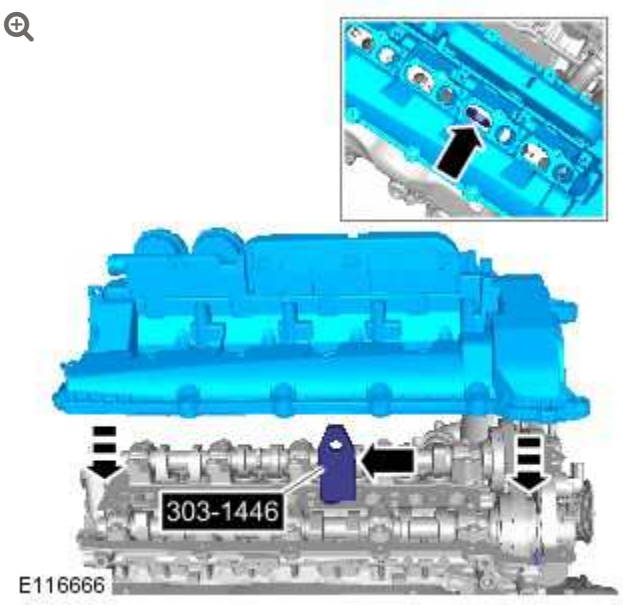

Special Tool(s): 303-1446

3.

NOTE:

Tighten the bolts in the indicated sequence.

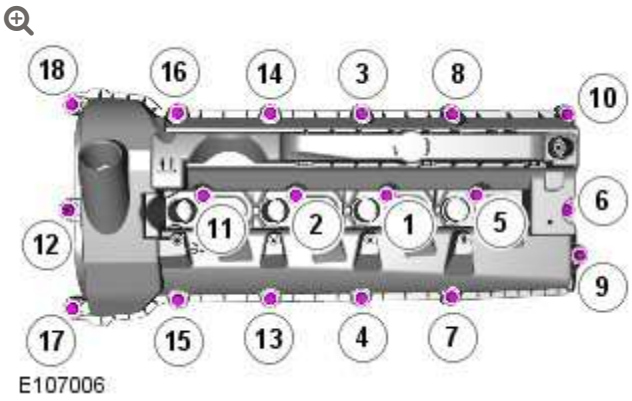

Torque: **13 Nm**

ENGINE – V8 S/C 5.0L PETROL

VALVE COVER RH (G1224610)

REMOVAL AND INSTALLATION

12.29.44	COVER – CAMSHAFT/ROCKER OR CYLINDER HEAD – RH/REAR – RENEW	5000 CC, AJ V8, SUPERCHARGED	6.6	USED WITHINS +

SPECIAL TOOL(S)



303–1446

Valve Cover Alignment Tool

REMOVAL

NOTES:

- Removal steps in this procedure may contain installation details.
- Some variation in the illustrations may occur, but the essential information is always correct.

1. Disconnect the battery ground cable.
   Refer to: Specifications (414-00, Specifications).

2. Refer to: Supercharger (303-12, Removal and Installation).

3. Refer to: Air Cleaner Outlet Pipe RH (303-12, Removal and Installation).

4. Refer to: Fuel Rail RH (303-04, Removal and Installation).

5. 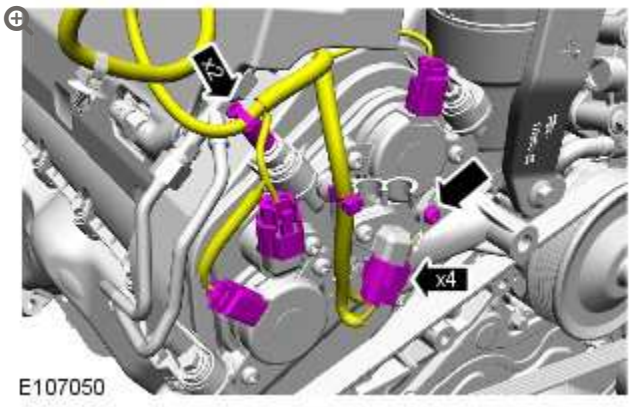

6.

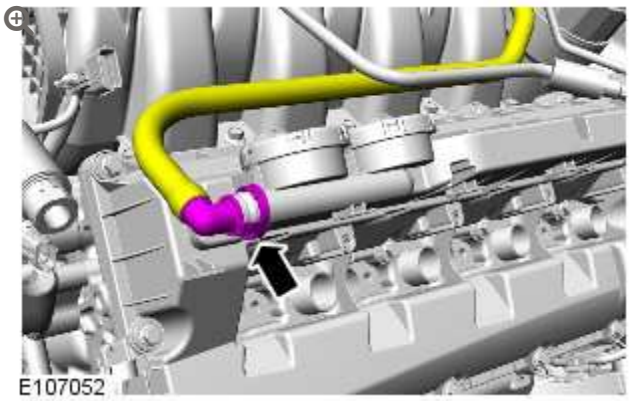

7.

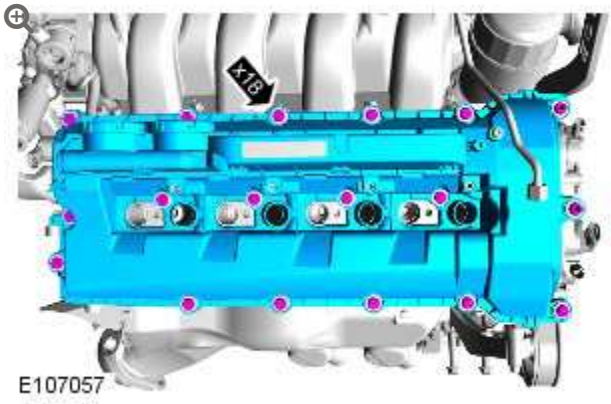

INSTALLATION

1.

CAUTIONS:

- Use only a plastic scraper when removing the sealing material.
- Use lint free cloth.
- Make sure that the mating faces are clean and free of corrosion and foreign material.
- Installation of the valve cover and tightening must be carried out within 7 minutes of applying the sealant.

NOTE:

Apply two beads of silcone gasket sealant (Loctite 5901) as shown on the illustration. The application of the sealant must be 1.5mm diameter 12mm long. Install the valve cover immediately after applying the sealant. The cover should be fitted directly to the head without smearing the sealant or the seals.

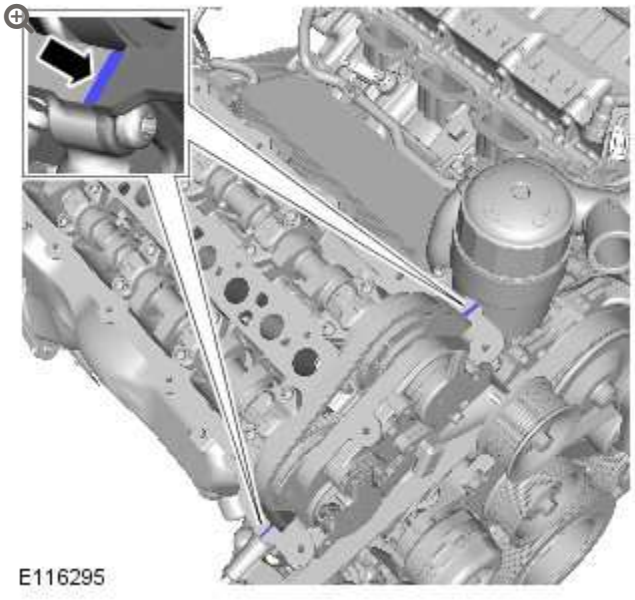

To install, reverse the removal procedure.

2.

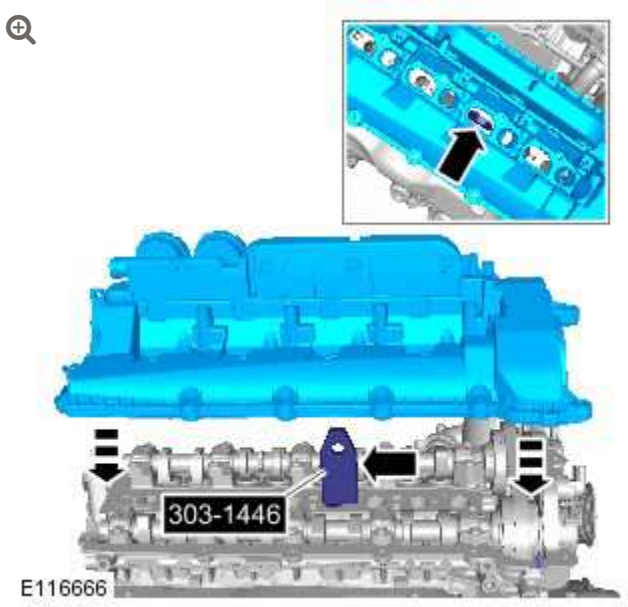

Special Tool(s): 303-1446

3.

NOTE:

Tighten the bolts in the indicated sequence.

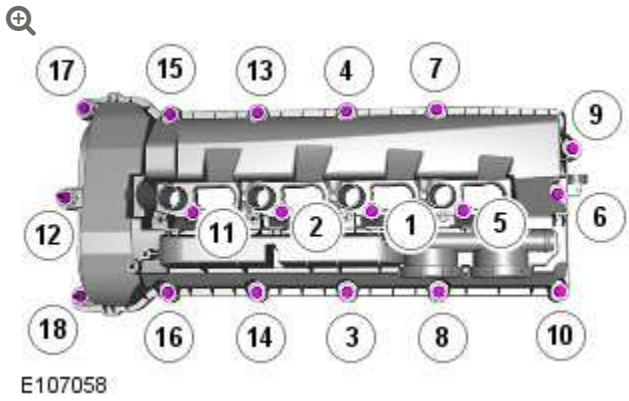

Torque: **13 Nm**

2012.0 RANGE ROVER (LM), 303-03

ENGINE COOLING – V8 5.0L PETROL/V8 S/C 5.0L PETROL

DESCRIPTION AND OPERATION

COMPONENT LOCATION – NATURALLY ASPIRATED VEHICLES

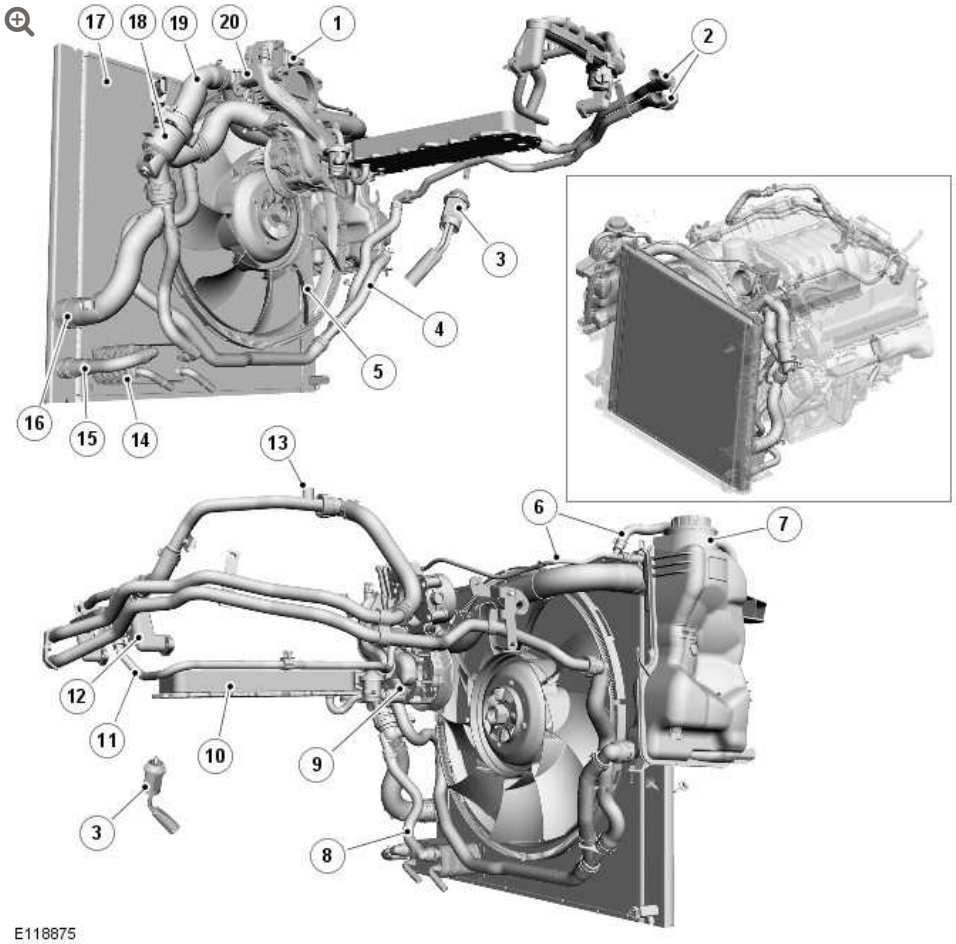

ITEM	DESCRIPTION
1	Throttle
2	Heater system supply and return hoses
3	Engine block heater (230 V version shown) or drain plug
4	Coolant supply/expansion hose
5	Cooling fan
6	Bleed hoses
7	Coolant expansion tank
8	Transmission fluid cooler return hose
9	Coolant pump
10	Engine oil cooler
11	Throttle body heater hose
12	Heater manifold
13	Bleed screw
14	Transmission fluid cooler
15	Transmission fluid cooler supply hose
16	Radiator lower hose
17	Radiator
18	Thermostat
19	Radiator upper hose
20	Outlet tube

COMPONENT LOCATION – SUPERCHARGER VEHICLES

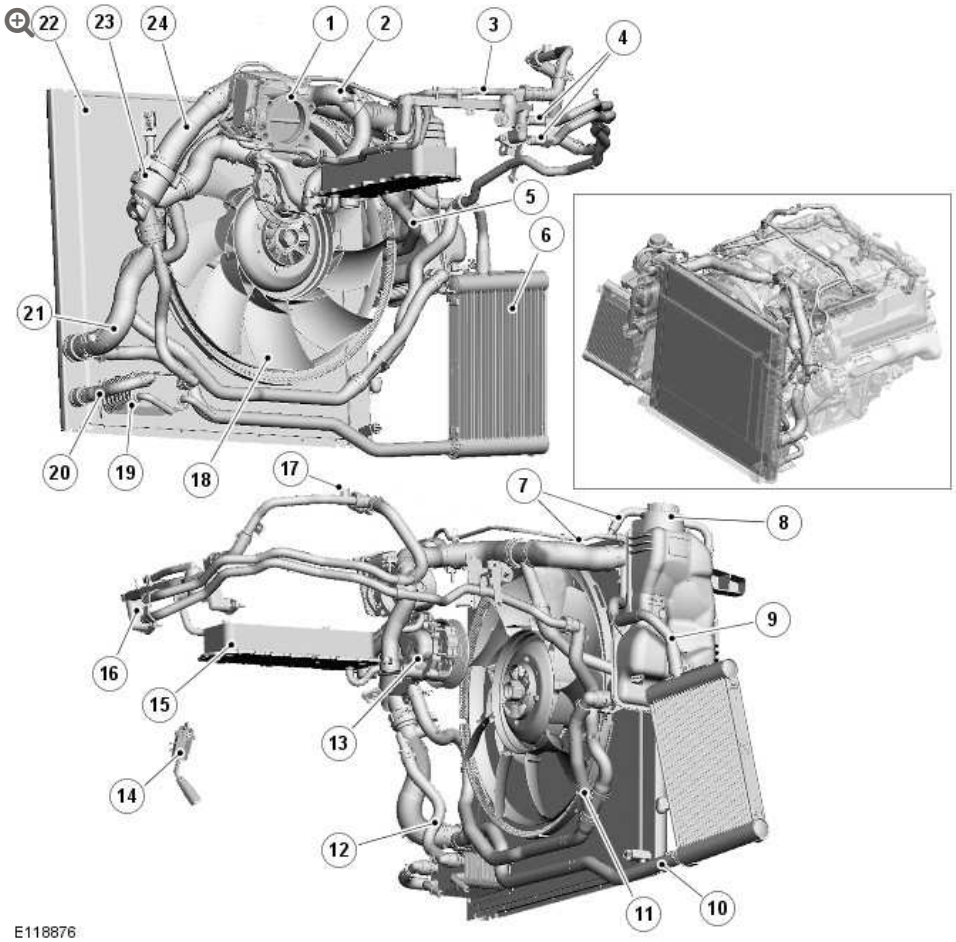

ITEM	DESCRIPTION
1	Throttle
2	Outlet tube
3	Throttle body heater hose
4	Heater system supply and return hoses
5	Charge air radiator supply hose
6	Auxiliary radiator
7	Bleed hoses
8	Coolant expansion tank
9	Auxiliary radiator supply hose

ITEM	DESCRIPTION
10	Auxiliary radiator return hose
11	Coolant supply/expansion hose
12	Transmission fluid cooler return hose
13	Coolant pump
14	Engine block heater (230 V version shown) or drain plug
15	Engine oil cooler
16	Heater manifold
17	Bleed screw
18	Cooling fan
19	Transmission fluid cooler
20	Transmission fluid cooler supply hose
21	Radiator lower hose
22	Radiator
23	Thermostat
24	Radiator upper hose

INTRODUCTION

The engine cooling system maintains the engine within an optimum temperature range under changing ambient and engine operating conditions. The system is a pressurized expansion tank system with continuous bleeds to separate air from the coolant and prevent the formation of air locks. The engine cooling system also provides:

- Heating for:
  - The passenger compartment.
  - The throttle body.
- Cooling for:
  - The engine oil cooler.

- The transmission fluid cooler.

The primary components of the engine cooling system are the:

- Coolant pump.
- Thermostat.
- Radiator.
- Auxiliary radiator (SC (supercharger) vehicles only).
- Cooling fan.
- Expansion tank.
- Outlet tube and heater manifold.
- Connecting hoses and pipes.

COOLANT PUMP

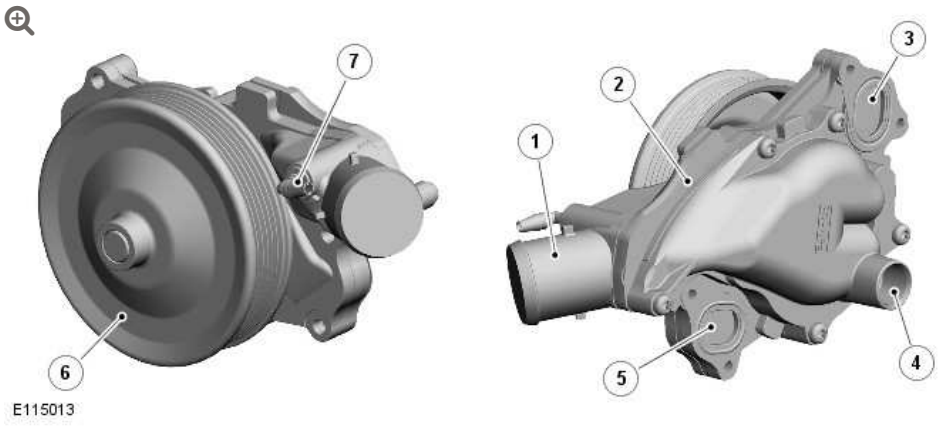

ITEM	DESCRIPTION
1	Inlet connection
2	Pump body
3	Outlet flange to RH cylinder head
4	Outlet to engine oil cooler
5	Outlet flange to LH cylinder head

ITEM	DESCRIPTION
6	Pulley
7	Bleed pipe connection (containing check valve)

The body of the coolant pump contains an impeller attached to a shaft supported in a bearing assembly. The impeller is driven by a pulley, pressed on to the front of the shaft, which is driven by the accessory drive belt.
For additional information, refer to: Accessory Drive (303-05B, Description and Operation).

Two coolant outlet flanges attach the coolant pump to the front of the cylinder heads. A pipe connects a further coolant outlet to a pipe from the engine oil cooler. A bleed connector is installed in the front of the coolant pump, adjacent to the coolant inlet connection from the thermostat. A check valve is incorporated into the bleed connection.

THERMOSTAT

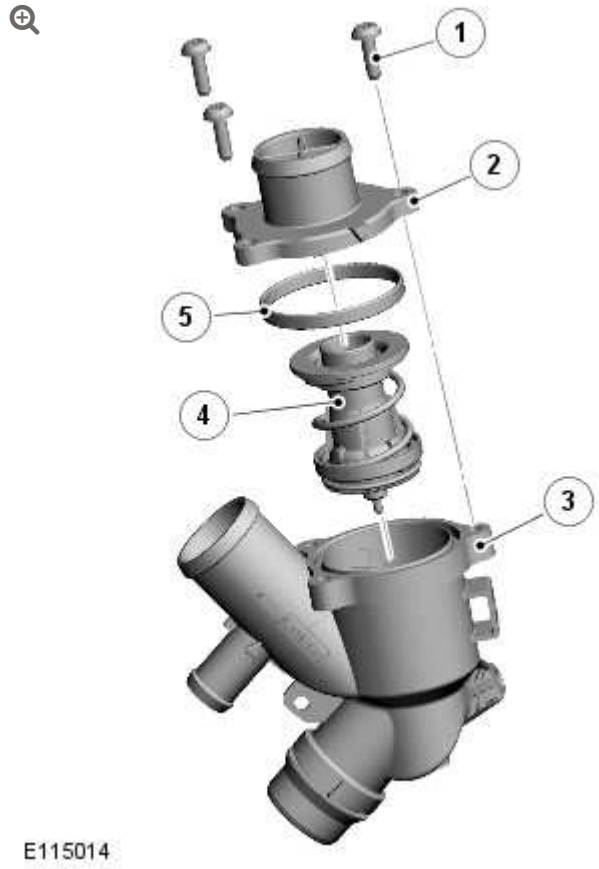

ITEM	DESCRIPTION
1	Screw (3 off)
2	Lower body
3	Upper body
4	Thermostat
5	Seal

The thermostat is a multi-stage device located in the coolant pump inlet to provide fast response and control of the engine outlet temperature.

The thermostat allows rapid engine warm-up by preventing coolant flow through the radiator and by limiting coolant flow through the cylinder block when the engine is cold. During warm-up and at

engines speeds above approximately 1800 rev/min, a by-pass valve opens to control the coolant flow and pressure, to protect the engine components. When the thermostat opening reaches 6 mm (0.24 in.), the by-pass flow is shut-off. When the thermostat opening exceeds 6 mm (0.24 in.), the radiator coolant flow is further controlled up to the point where the thermostat is fully open. At this point maximum radiator coolant flow is achieved to provide maximum cooling.

On both naturally aspirated and supercharger vehicles, the thermostat begins to open at 88 - 90 °C (190 - 194 °F) and is fully open at 102 °C (216 °F).

RADIATOR

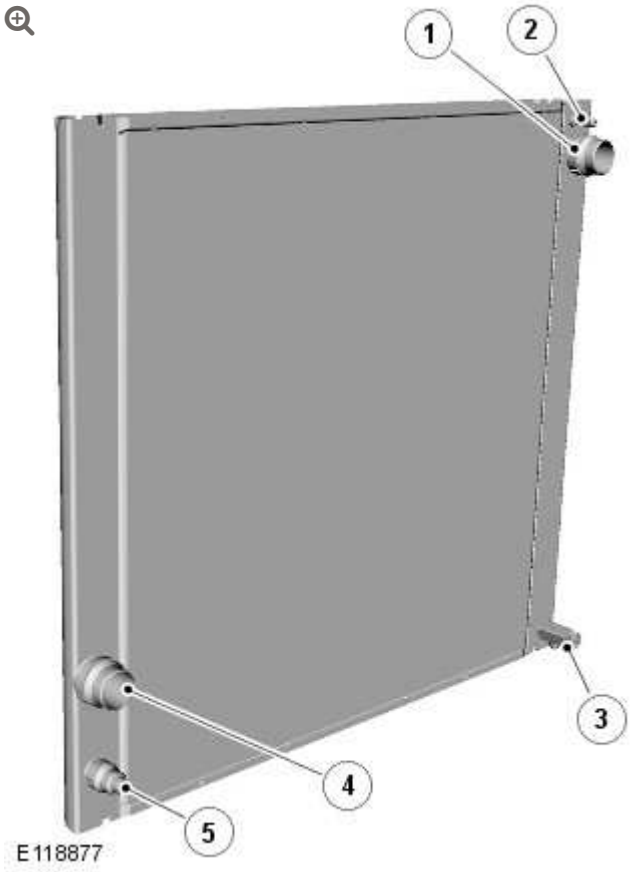

ITEM	DESCRIPTION
1	Upper hose connection

ITEM	DESCRIPTION
2	Bleed hose connection
3	Drain valve
4	Lower hose connection
5	Transmission fluid cooler supply hose connection

The radiator is an aluminum cross flow type installed in a plastic frame. Upper and lower mounting brackets attach the sides of the frame to the hood locking platform and the front side members respectively.

Connections are incorporated into the end tanks for the upper and lower hoses, the supply hose of the transmission fluid cooler and a bleed hose. A drain valve is installed in the bottom rear of the RH (right-hand) end tank.

AUXILIARY RADIATOR (SUPERCHARGER VEHICLES ONLY)



ITEM	DESCRIPTION
1	Supply hose connection
2	Return hose connection

The auxiliary radiator is connected in parallel with the (main) radiator to increase the engine cooling capacity on SC vehicles. The auxiliary radiator is installed in an air duct located between the front bumper and the RH wheel arch liner. Slots in the wheel arch liner allow the air to flow through the auxiliary cooler and into the wheel arch. The two end tanks of the auxiliary radiator incorporate connections for the supply and return hoses that connect it to the radiator upper and lower hoses.

COOLING FAN

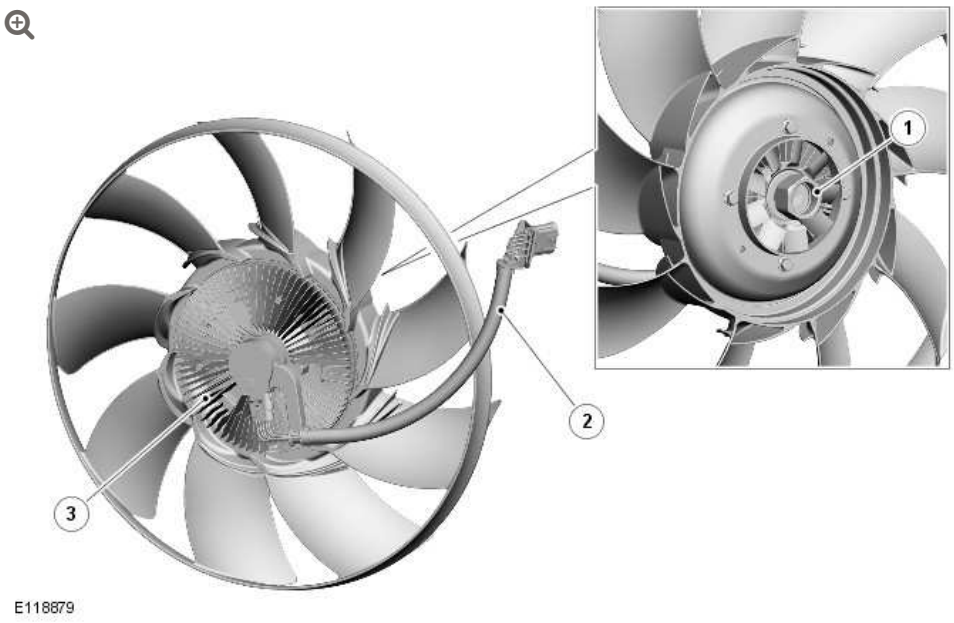

ITEM	DESCRIPTION
1	Securing nut
2	Harness
3	Electro-viscous drive unit

For additional airflow through the radiator, particularly when the vehicle is stationary or moving slowly, there is an engine driven electro-viscous cooling fan. The cooling fan functions as a normal viscous fan, but with electronic control over the level of engagement of the viscous clutch. The ECM (engine control module) controls the level of engagement to optimize fan speed for all operating conditions.

A securing nut attaches the cooling fan to a drive pulley, which is mounted on the front of the engine and driven by the accessory drive system.

NOTE:

On naturally aspirated engines the securing nut has a LH (left-hand) thread; on SC engines the securing nut has a RH thread.

The blades of the cooling fan are located in a fan cowl attached to the rear of the radiator frame. Brushes around the circumference of the aperture in the fan cowl provide a seal with the blade shroud. An electrical connector in the top left corner of the fan cowl provides the interface between the cooling fan harness and the vehicle wiring.

EXPANSION TANK

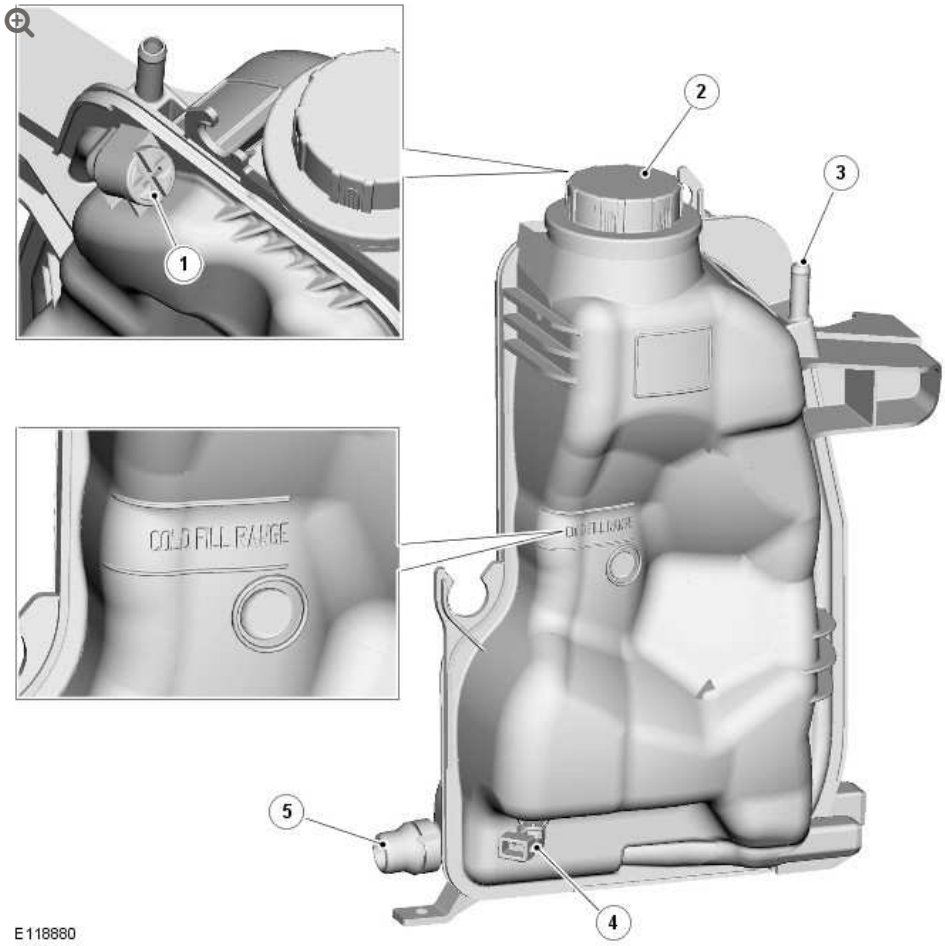

ITEM	DESCRIPTION
1	Bleed screw

ITEM	DESCRIPTION
2	Filler cap
3	Bleed hose connection
4	Level sensor
5	Coolant supply/expansion hose connection

The expansion tank is installed on the RH side of the engine compartment, immediately behind the suspension turret. A filler cap, bleed screw and level sensor are incorporated into the expansion tank. MAX and MIN level markings are molded onto the exterior of the tank.

The expansion tank provides the following functions:

- Service fill.
- Coolant expansion during warm-up.
- Air separation during operation.
- System pressurization by the filler cap.

The expansion tank has an air space of approximately 1.1 liters (1.16 US quarts), above the MAX level, to allow for coolant expansion.

OUTLET TUBE AND HEATER MANIFOLD

Outlet Tube

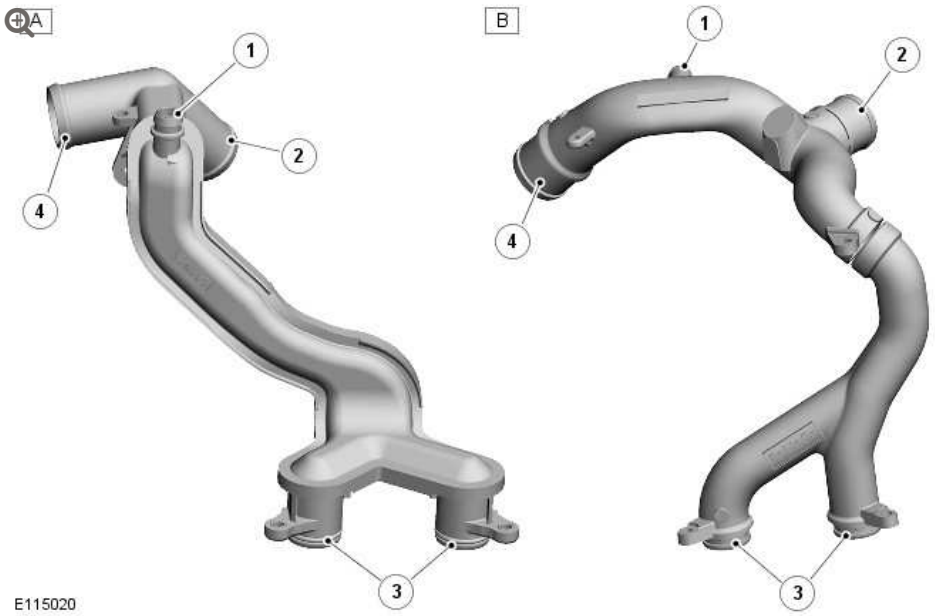

ITEM	DESCRIPTION
A	Outlet tube on naturally aspirated vehicles
B	Outlet tube on supercharger vehicles
1	Bleed spigot (fitted with blanking plug)
2	Radiator upper hose connection
3	Cylinder block connections
4	Thermostat hose connection

Heater Manifold

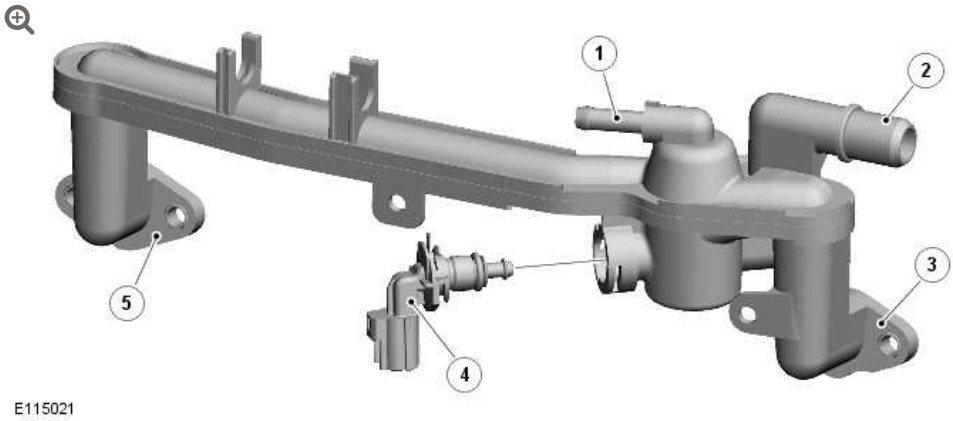

ITEM	DESCRIPTION

ITEM	DESCRIPTION
1	Throttle body heater hose connection
2	Heater core supply hose connection
3	RH cylinder head connection
4	Engine coolant temperature sensor
5	LH cylinder head connection

ENGINE COOLANT

The engine coolant is formulated to last for ten years or 240,000 km (150,000 miles). The coolant is silicate free and must not be mixed with conventional engine coolant.

CONTROL DIAGRAM

NOTE:

A = Hardwired

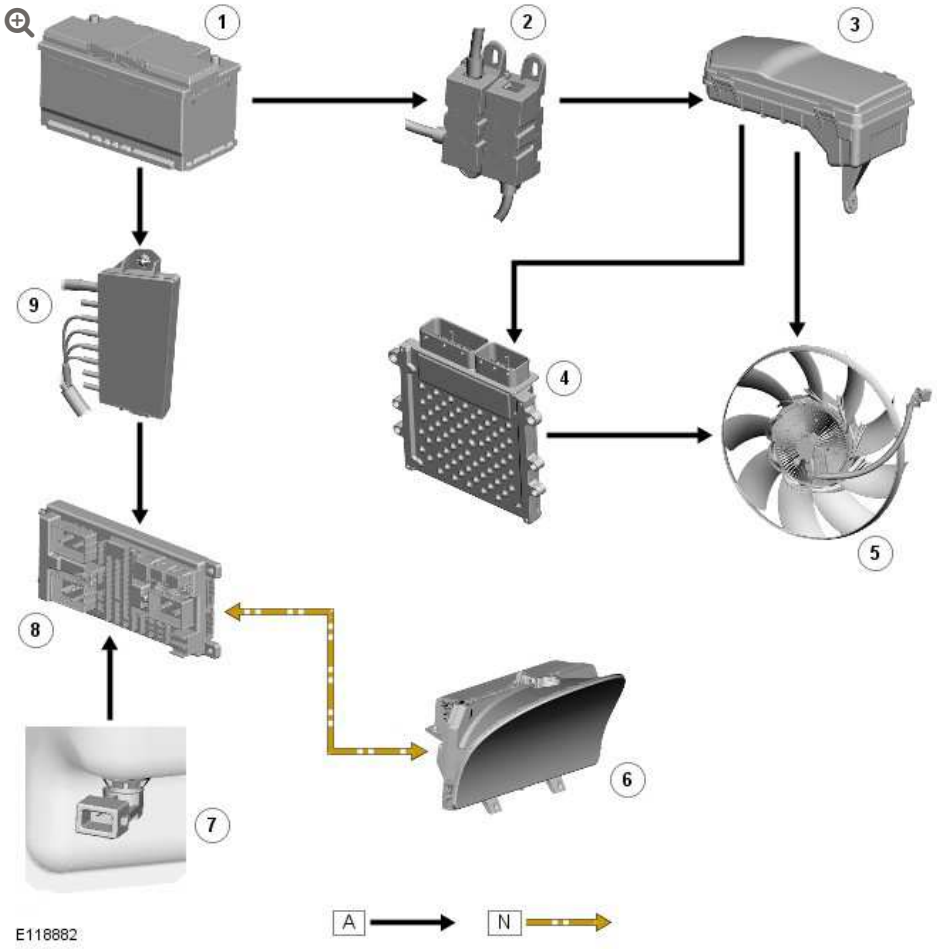

ITEM	DESCRIPTION
1	Battery
2	BJB (battery junction box) 2 (250 A megafuse)
3	EJB (engine junction box)
4	ECM (engine control module)
5	Cooling fan
6	Instrument cluster
7	Coolant level sensor
8	CJB (central junction box)
9	BJB (40 A megafuse)

OPERATION

Engine Cooling Flow Diagram - Naturally Aspirated Vehicles

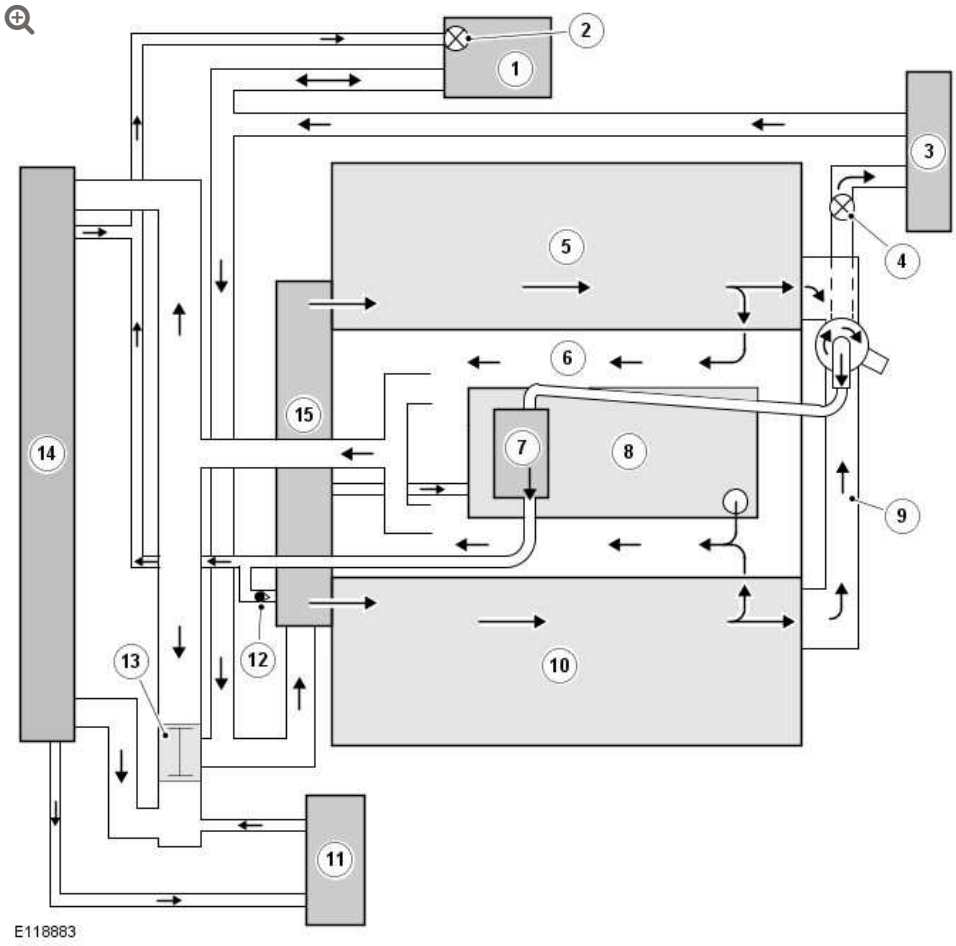

ITEM	DESCRIPTION
1	Expansion tank
2	Bleed screw
3	Heater system
4	Bleed screw
5	RH cylinder head
6	Cylinder block
7	Throttle
8	Engine oil cooler
9	Heater manifold
10	LH cylinder head

ITEM	DESCRIPTION
11	Transmission fluid cooler
12	Check valve
13	Thermostat
14	Radiator
15	Coolant pump

Engine Cooling Flow Diagram - Supercharger Vehicles

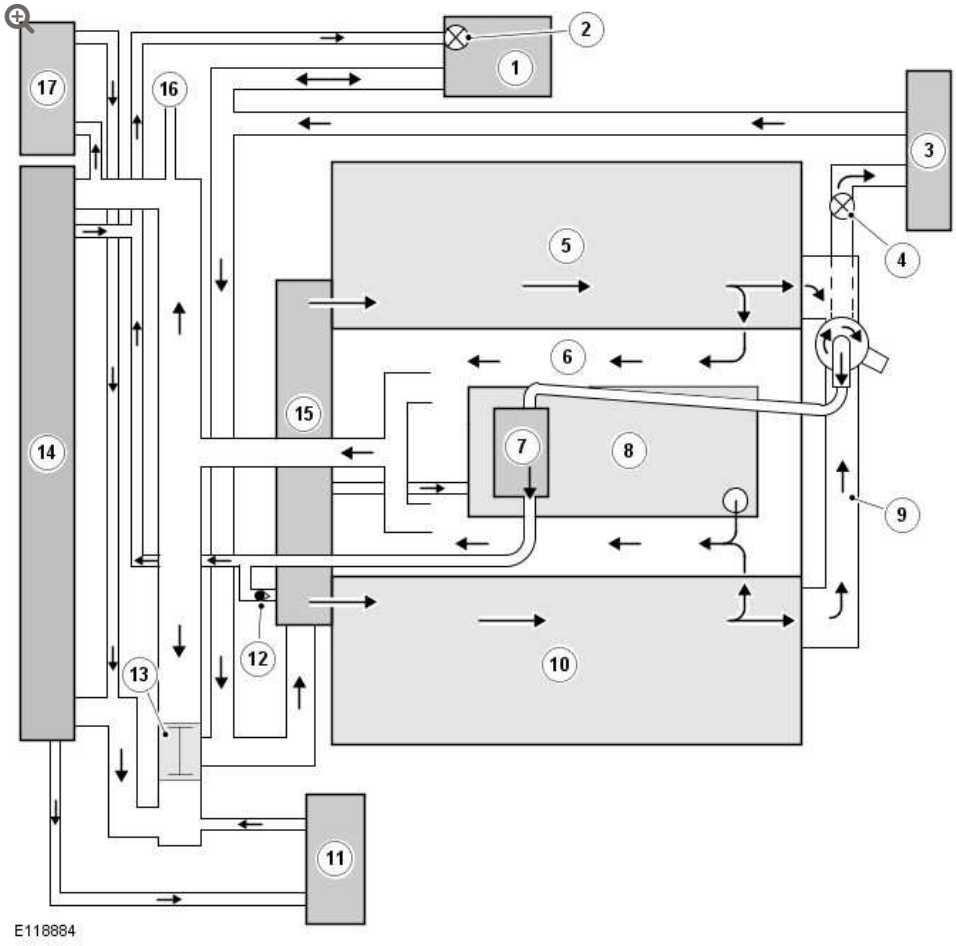

ITEM	DESCRIPTION
1	Expansion tank
2	Bleed screw
3	Heater system
4	Bleed screw

ITEM	DESCRIPTION
5	RH cylinder head
6	Cylinder block
7	Throttle
8	Engine oil cooler
9	Heater manifold
10	LH cylinder head
11	Transmission fluid cooler
12	Check valve
13	Thermostat
14	Radiator
15	Coolant pump
16	Connection with SC cooling system
17	Auxiliary radiator

When the engine is running, the coolant is circulated around the engine cooling system by the coolant pump. From the coolant pump, coolant flows through the cylinder heads and the engine oil cooler into the cylinder block and the heater manifold.

In the cylinder block, the coolant flows forwards to the outlet tube. When the coolant is cold, the thermostat is closed and the coolant flows direct from the outlet tube back to the coolant pump. Once the coolant reaches operating temperature the thermostat begins to open, to control system temperature, and coolant flows from the outlet tube to the coolant pump via the radiator and, on SC vehicles, the auxiliary radiator. When the thermostat is open, the coolant flow through the radiator(s) also generates a coolant flow through the transmission fluid cooler.

From the heater manifold the coolant flows through the electronic throttle and the heater core, in parallel circuits that are unaffected by

the position of the thermostat. From the electronic throttle, the coolant merges with bleed coolant from the coolant pump and the outlet tube and flows to the expansion tank. From the heater core, the coolant flows back to the inlet of the coolant pump.

Expansion and contraction of the coolant is accommodated by an air space in the expansion tank and the compliance of the flexible hoses.

If the coolant level in the expansion tank decreases below a predetermined value, the coolant level sensor connects a ground to the CJB (central junction box), which sends a message to the instrument cluster on the medium speed CAN (controller area network) bus to display the message COOLANT LEVEL LOW in the message center.
For additional information, refer to: Instrument Cluster (413-01, Description and Operation).

To control the cooling fan, the ECM sends a PWM (pulse width modulation) signal to the cooling fan drive unit. The ECM varies the duty cycle of the PWM signal between 0 and 100% to vary the clutch engagement and thus fan speed. The ECM determines the required fan speed from:

- Coolant, ambient air and transmission fluid temperatures
- A/C (air conditioning) system condenser cooling fan demand
- Road speed
- Terrain optimization mode.

If the electrical connections to the viscous fan are disconnected the fan will idle and the engine may overheat. If the ECM detects a cooling fan fault it stores the appropriate DTC (diagnostic trouble code) and signals the instrument cluster on the medium speed CAN bus to display the message COOLING SYSTEM FAULT MONITOR GAUGE in the message center.

ENGINE COOLING - V8 5.0L PETROL/V8 S/C 5.0L PETROL

AUXILIARY RADIATOR (G1224079)

REMOVAL AND INSTALLATION

26.40.09	RADIATOR ASSEMBLY - SUPPLEMENTARY - RENEW	5000 CC, AJ V8, SUPERCHARGED	1.7	USED WITHINS	+

REMOVAL

NOTE:

Removal steps in this procedure may contain installation details.

1. **WARNING:**

   Make sure to support the vehicle with axle stands.

   Raise and support the vehicle.

2. Refer to: Coolant Expansion Tank (303-03, Removal and Installation).

3.

Refer to: Fender Splash Shield (501-02, Removal and Installation).

4. **CAUTION:**

Be prepared to collect escaping coolant.

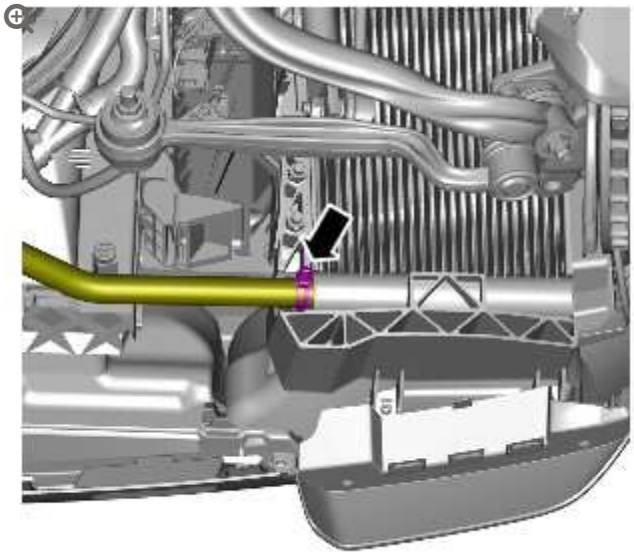

E118953

5.

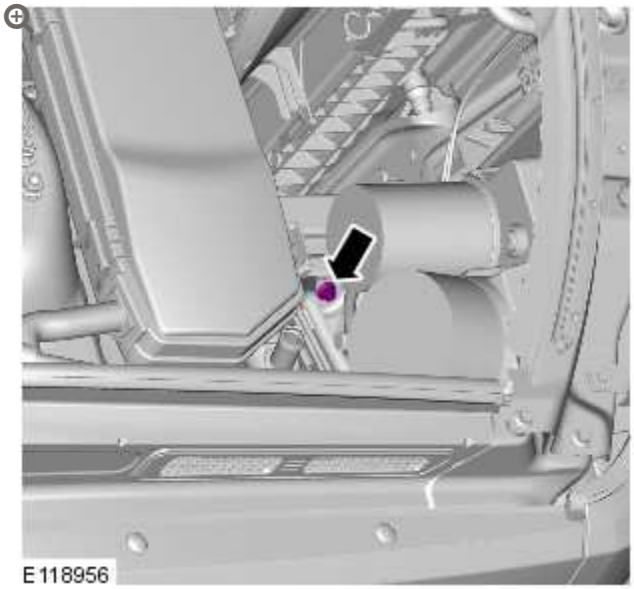

E118956

Torque: **10 Nm**

6.

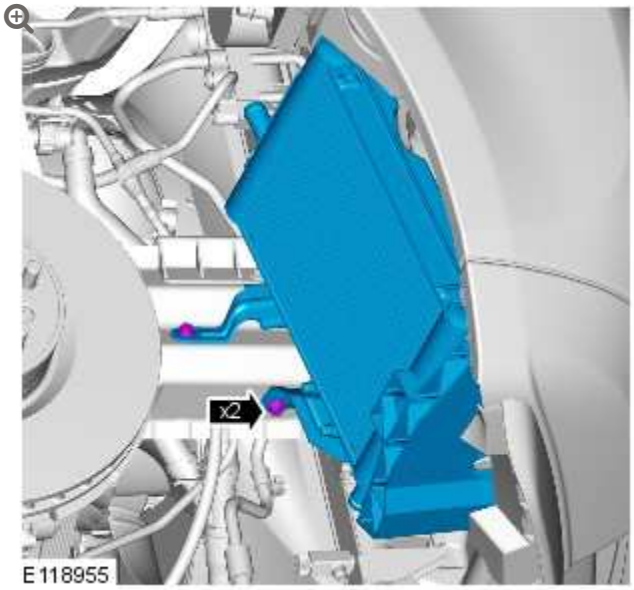

Torque: **10 Nm**

7.

NOTE:

Do not disassemble further if the component is removed for access only.

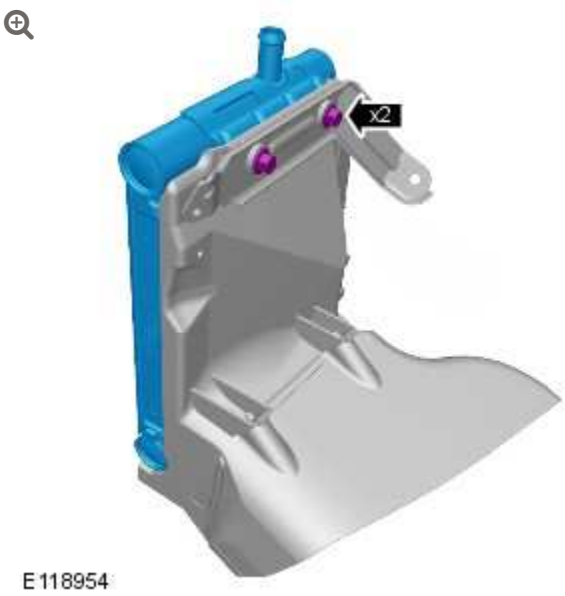

Torque: **10 Nm**

INSTALLATION

1. To install reverse the removal procedure.

ENGINE COOLING – V8 5.0L PETROL/V8 S/C 5.0L PETROL

COOLANT EXPANSION TANK – V8 S/C 5.0L PETROL (G1245617)

REMOVAL AND INSTALLATION

26.15.01	TANK - RENEW	5000 CC, AJ V8, SUPERCHARGED	1.2	USED WITHINS	+

REMOVAL

NOTE:

Removal steps in this procedure may contain installation details.

1. **WARNING:**

   Make sure to support the vehicle with axle stands.

   Raise and support the vehicle.

2. Refer to: Cooling System Partial Draining and Vacuum Filling (303-03B, General Procedures).

3. Refer to: Air Cleaner Outlet Pipe RH (303-12A Intake Air Distribution and Filtering - V8 5.0L Petrol, Removal and Installation).

4. Refer to: Air Cleaner RH (303-12A Intake Air Distribution and Filtering - V8 5.0L Petrol, Removal and Installation).

5. **CAUTION:**

   Be prepared to collect escaping coolant.

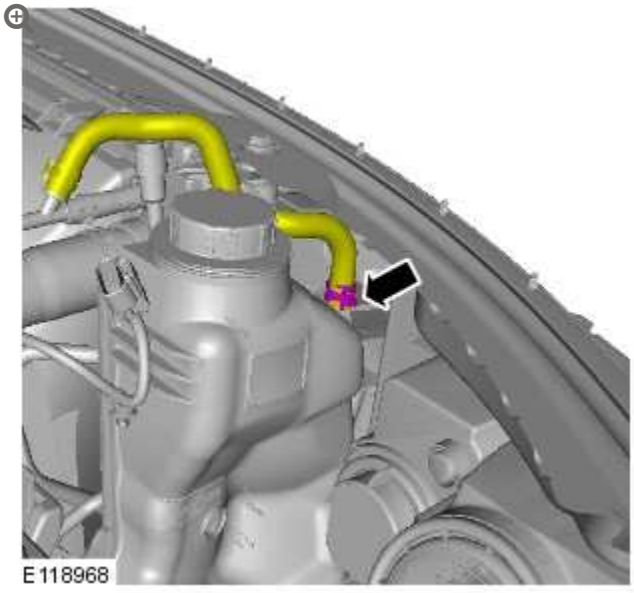

6. **CAUTION:**

   Be prepared to collect escaping coolant.

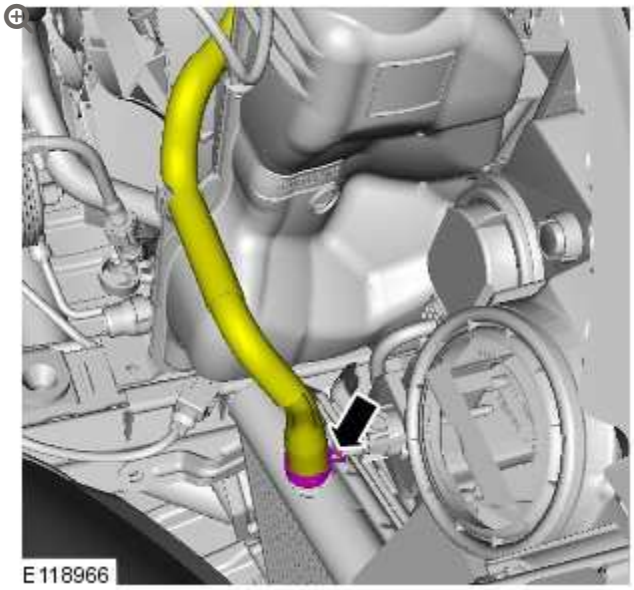

7.

NOTE:

Some variation in the illustrations may occur, but the essential information is always correct.

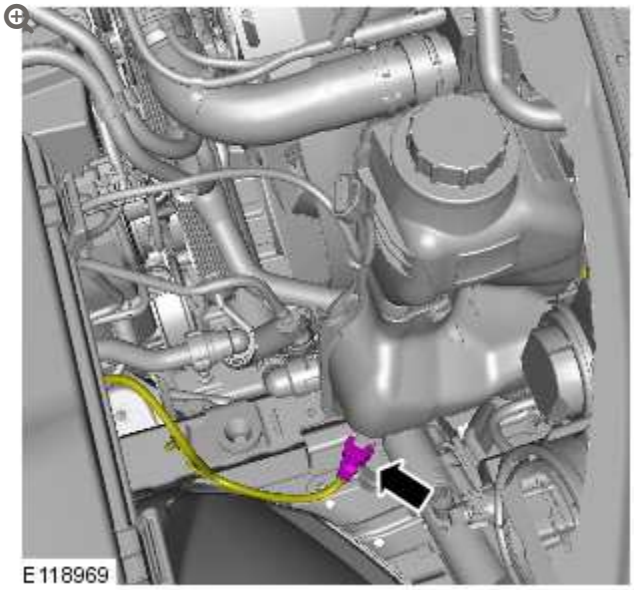

8.

CAUTION:

Be prepared to collect escaping coolant.

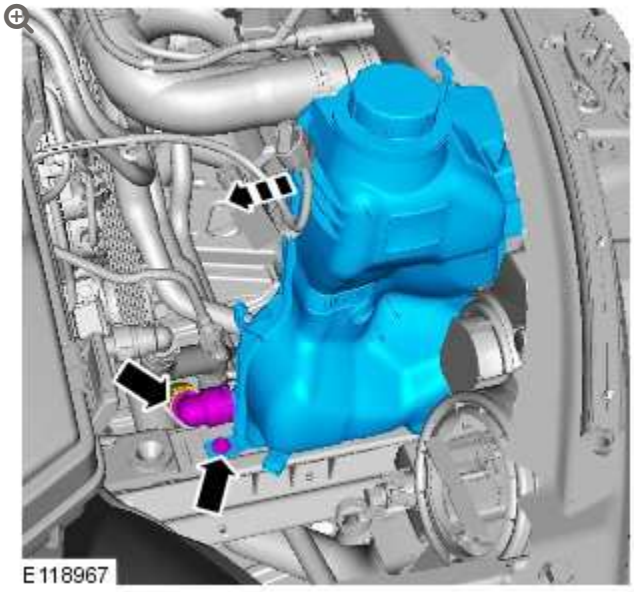

Torque: **9 Nm**

INSTALLATION

1. To install reverse the removal procedure.

ENGINE COOLING - V8 5.0L PETROL/V8 S/C 5.0L PETROL

COOLANT PUMP - V8 S/C 5.0L PETROL (G1224388)

REMOVAL AND INSTALLATION

26.50.01	PUMP - WATER - RENEW	5000 CC, AJ V8, SUPERCHARGED	1.5	USED WITHINS	+
26.50.26	AUXILIARY COOLANT PUMP - RENEW	5000 CC, AJ V8, SUPERCHARGED	0.4	USED WITHINS	+

REMOVAL

NOTE:

Removal steps in this procedure may contain installation details.

1. Disconnect the battery ground cable.
   Refer to: Specifications (414-00 Battery and Charging System - General Information, Specifications).

2.

WARNING:

Make sure to support the vehicle with axle stands.

Raise and support the vehicle.

3. Refer to: Cooling System Partial Draining and Vacuum Filling (303-03B, General Procedures).

4. Refer to: Accessory Drive Belt - V8 S/C 5.0L Petrol (303-05 Accessory Drive - V8 5.0L Petrol/V8 S/C 5.0L Petrol, Removal and Installation).

5. 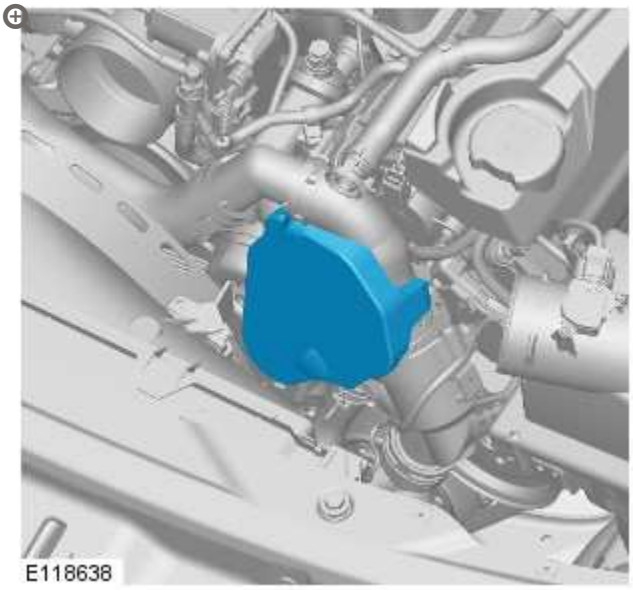

6.

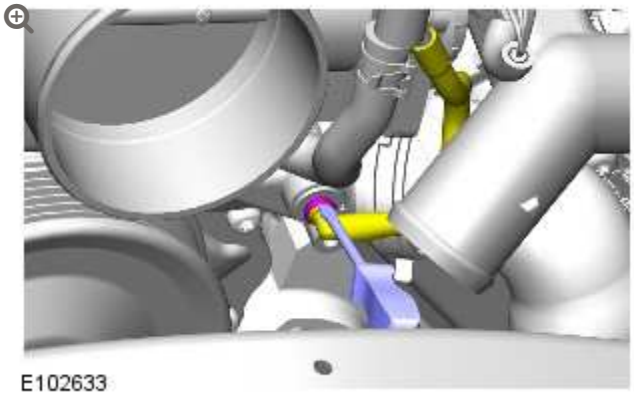

7.

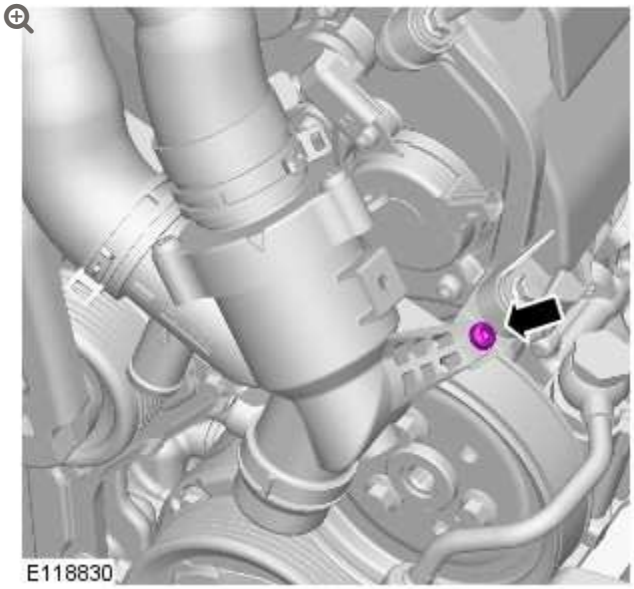

- *Torque:* **10 Nm**

8.

NOTE:

Some variation in the illustrations may occur, but the essential information is always correct.

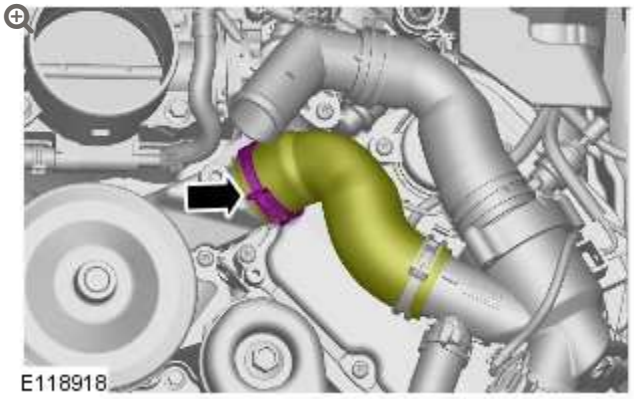

9.

NOTE:

Some variation in the illustrations may occur, but the essential information is always correct.

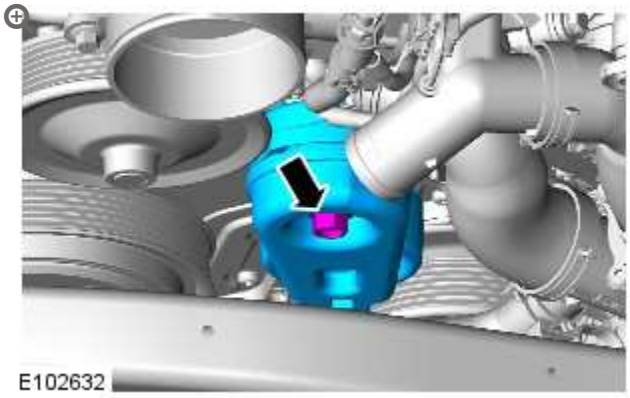

- *Torque:* **40 Nm**

10.

WARNING:

Fluid loss is unavoidable, use absorbent cloth or a container to collect the fluid.

CAUTION:

Engine coolant will damage the paint finished surfaces. If spilt, immediately remove the coolant and clean the area with water.

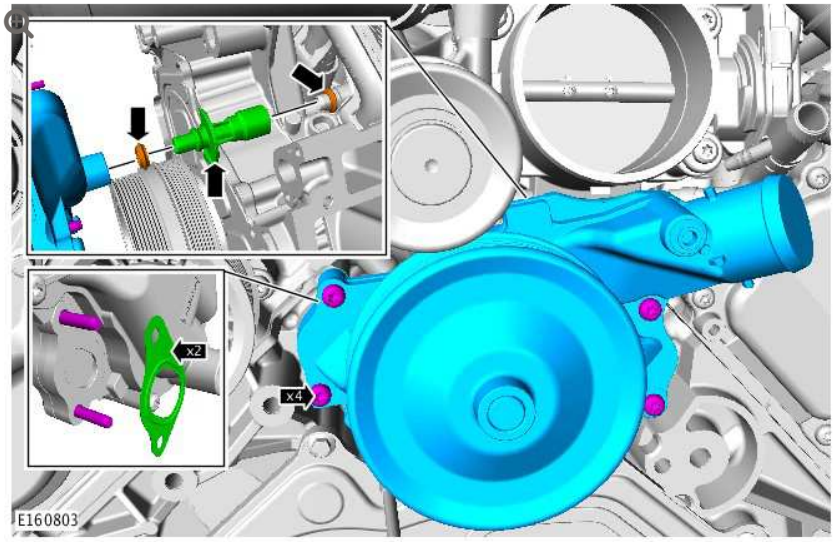

- *Torque:* **12 Nm**

INSTALLATION

1.

CAUTIONS:

- Make sure that the gaskets are correctly located.
- Install new o-ring seals.
- Install all the bolts finger tight before final tightening.

NOTE:

Install new gaskets.

To install, reverse the removal procedure.

ENGINE COOLING - V8 5.0L PETROL/V8 S/C 5.0L PETROL

COOLING FAN - V8 S/C 5.0L PETROL (G1235552)

REMOVAL AND INSTALLATION

SPECIAL TOOL(S)



303-1142

Viscous Coupling Wrench



303-1143

Viscous Coupling Holding Tool

REMOVAL

NOTE:

Removal steps in this procedure may contain installation details.

1. Disconnect the battery ground cable.
   Refer to: Specifications (414-00, Specifications).

2. **WARNING:**

   Make sure to support the vehicle with axle stands.

   Raise and support the vehicle.

3. Refer to: Air Cleaner Outlet Pipe T-Connector (303-12, Removal and Installation).

4. Refer to: Air Cleaner Outlet Pipe LH (303-12, Removal and Installation).

5. Refer to: Air Cleaner Outlet Pipe RH (303-12, Removal and Installation).

6.

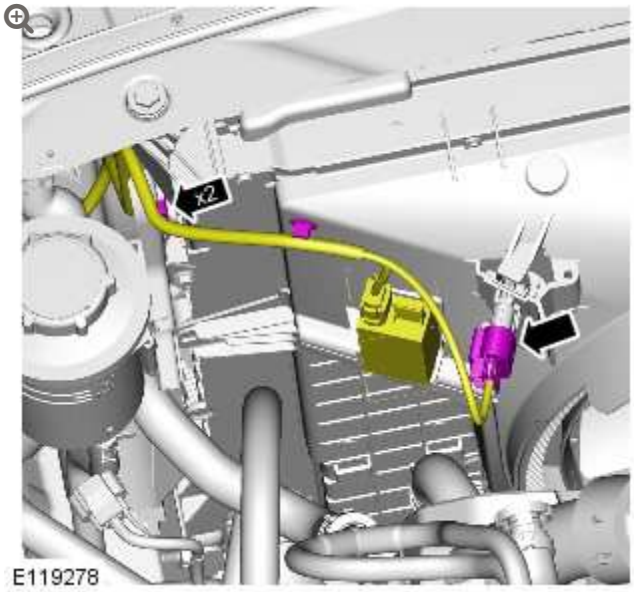

7.

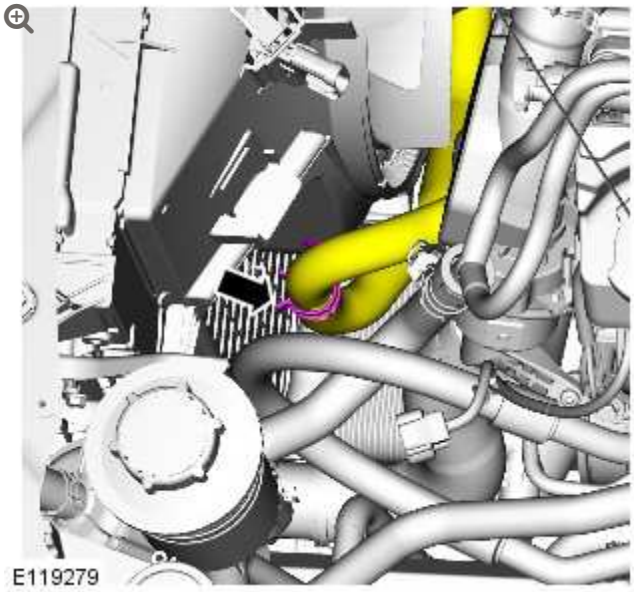

8.

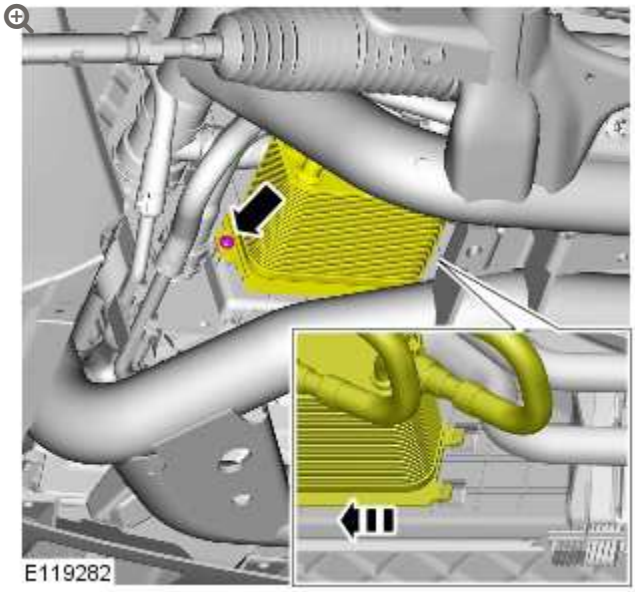

9.

NOTE:

Some variation in the illustrations may occur, but the essential information is always correct.

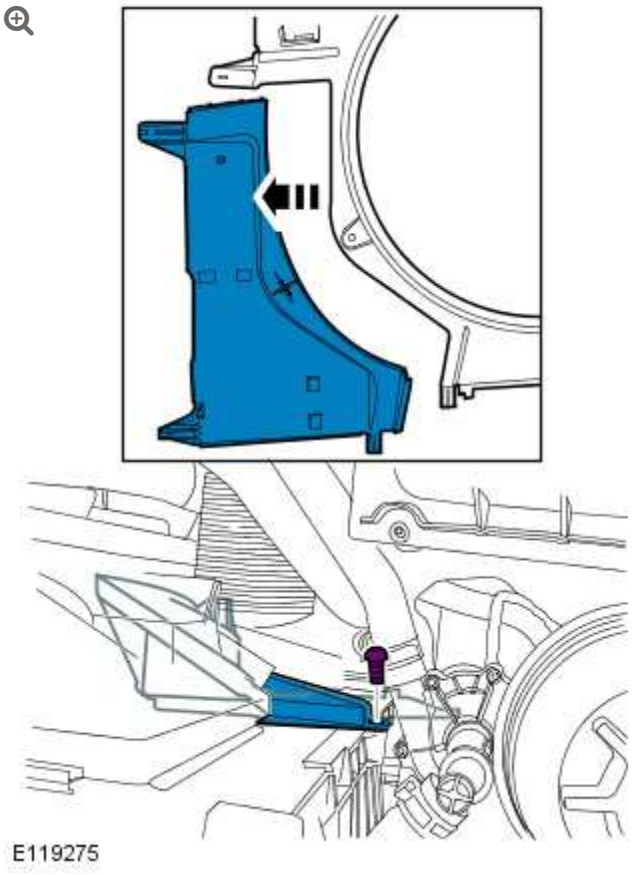

10.

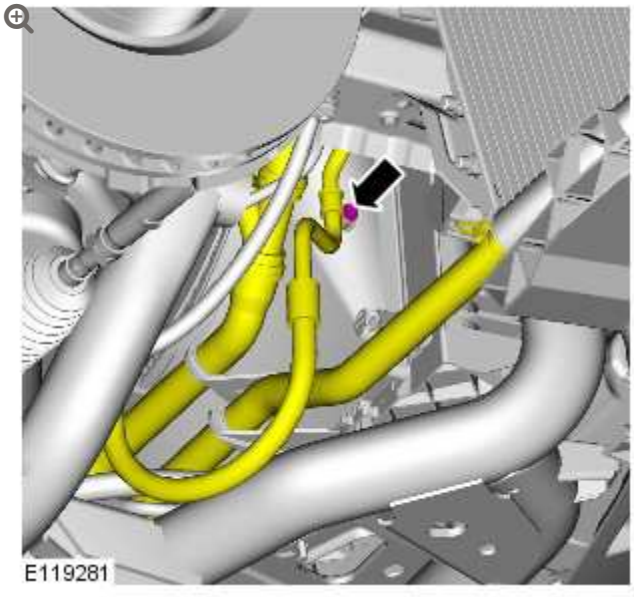

11.

CAUTION:

Always protect the cooling pack elements to prevent accidental damage.

NOTES:

- The thread is right handed.
- Some variation in the illustrations may occur, but the essential information is always correct.

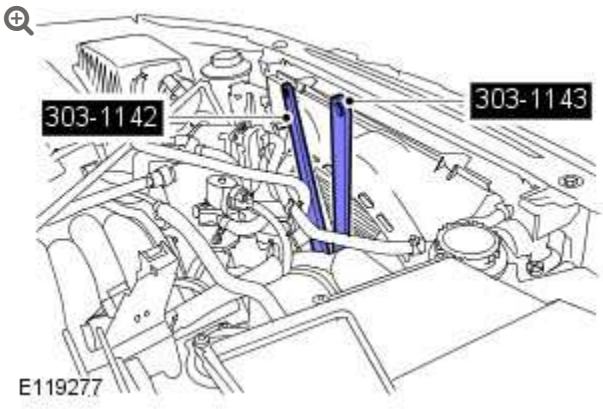

Special Tool(s): 303-1142, 303-1143

Torque: **65 Nm**

12.

NOTE:

Some variation in the illustrations may occur, but the essential information is always correct.

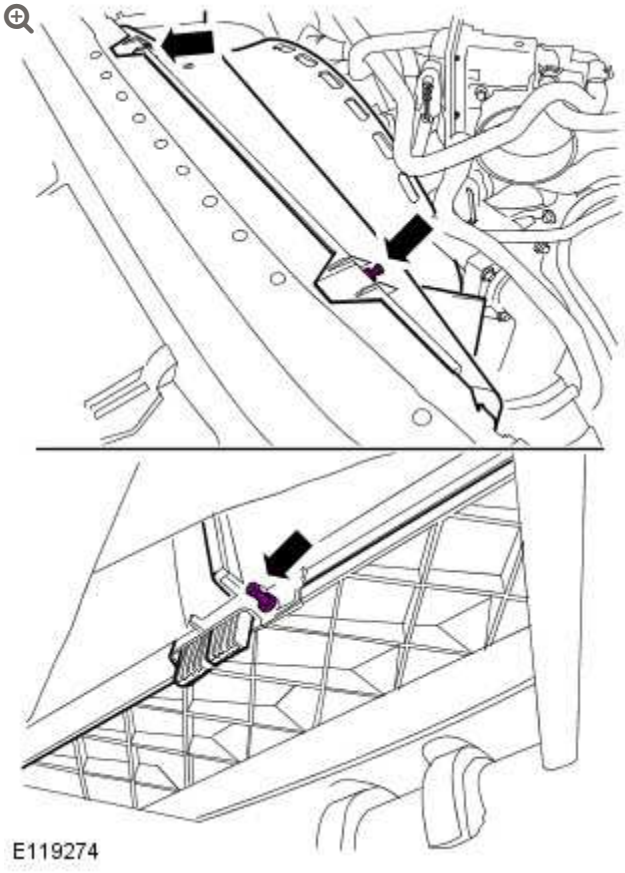

13.

CAUTION:

Always protect the cooling pack elements to prevent accidental damage.

NOTE:

Some variation in the illustrations may occur, but the essential information is always correct.

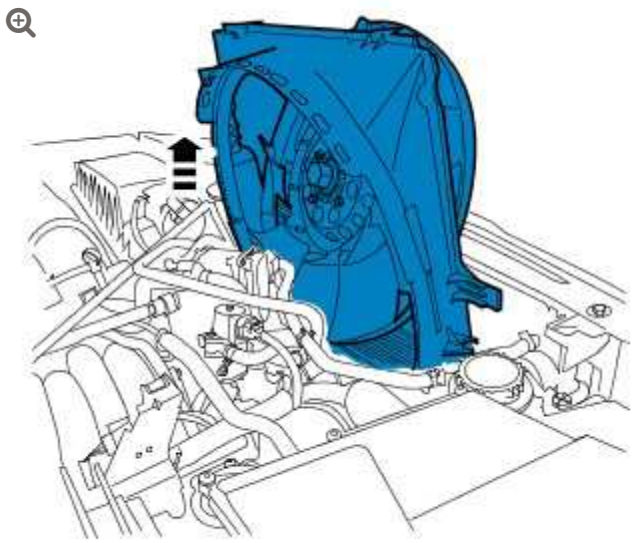

E119276

INSTALLATION

1. To install reverse the removal procedure.

COOLING MODULE – V8 S/C 5.0L PETROL (G1224083)

REMOVAL AND INSTALLATION

REMOVAL

NOTE:

Removal steps in this procedure may contain installation details.

1. Refer to: Specifications (414-00 Battery and Charging System - General Information, Specifications).
2. Refer to: Air Conditioning (A/C) System Recovery, Evacuation and Charging - V8 5.0L Petrol/V8 S/C 5.0L Petrol (412-00 Climate Control System - General Information, General Procedures).
3. **WARNING:**

   Make sure to support the vehicle with axle stands.

Raise and support the vehicle.

4. **NOTE:**

Some variation in the illustrations may occur, but the essential information is always correct.

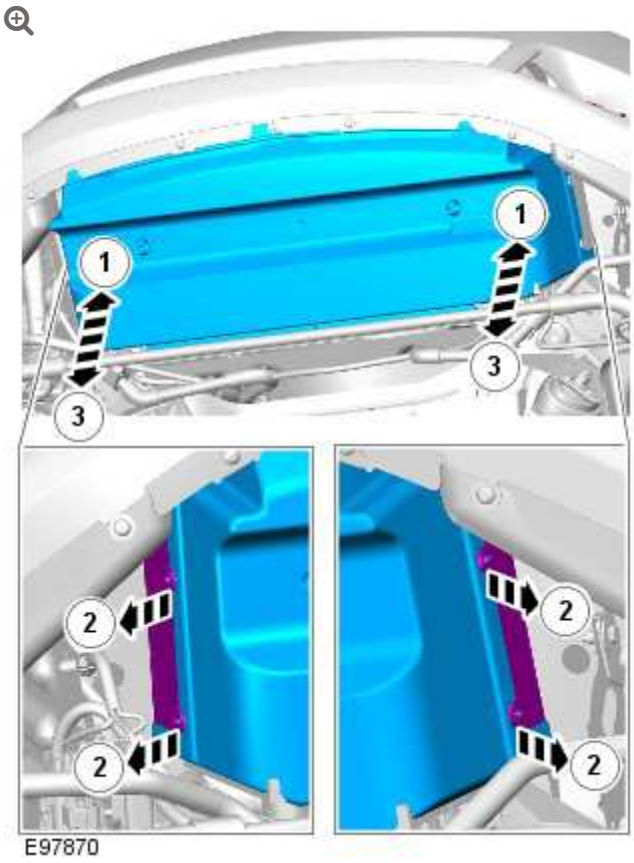

E97870

5. **WARNINGS:**

- Since injury such as scalding could be caused by escaping steam or coolant, do not remove the filler cap from the coolant expansion tank while the system is hot.
- Be prepared to catch escaping fluid.

Refer to: Cooling System Partial Draining, Filling and Bleeding - V8 S/C 5.0L Petrol (303-03A Engine Cooling - V8 5.0L Petrol/V8 S/C 5.0L Petrol, General Procedures).

6.

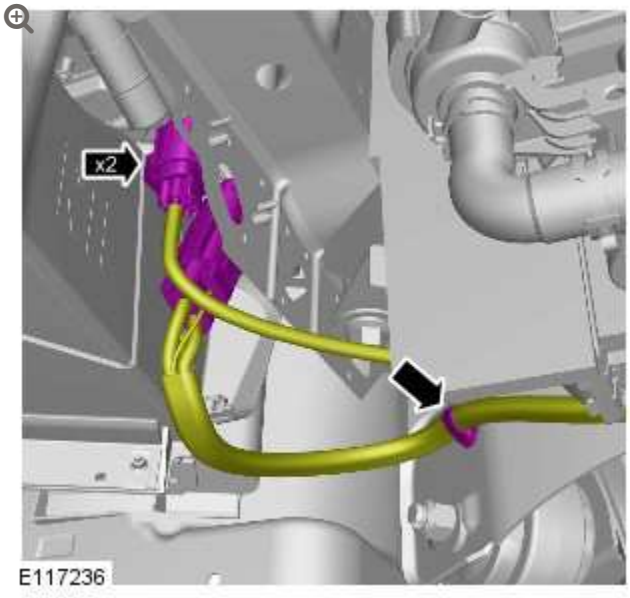

7.

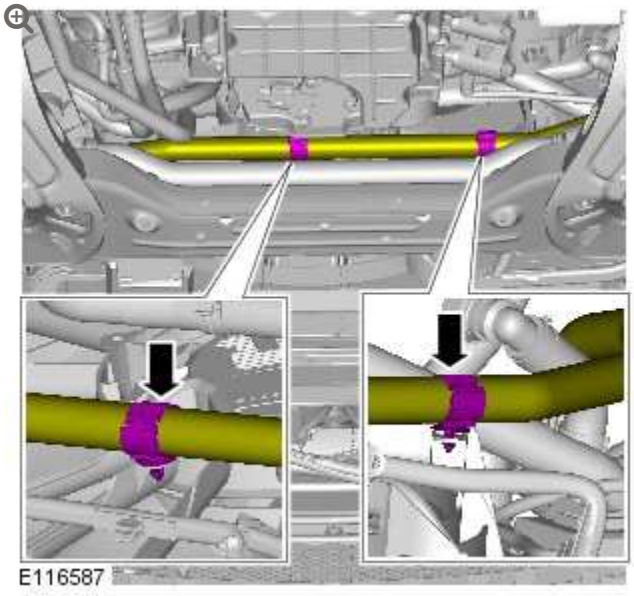

8.

CAUTION:

A new O-ring seal is to be installed.

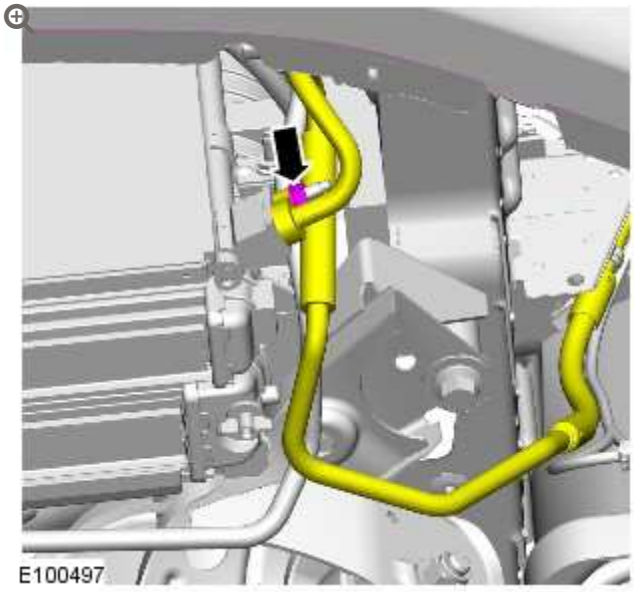

Torque: **8 Nm**

9. **CAUTION:**

A new O-ring seal is to be installed.

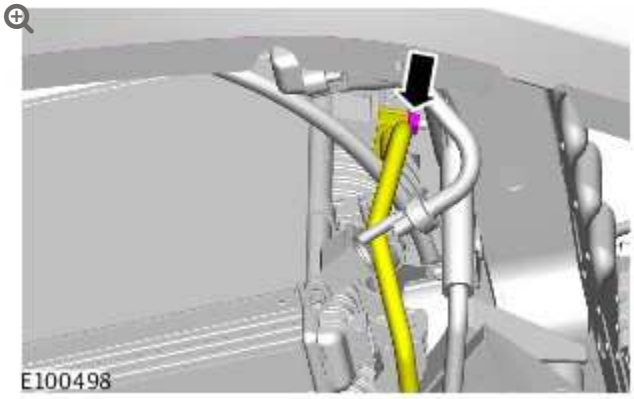

Torque: **8 Nm**

10. Lower the vehicle.

11.

Refer to: Air Cleaner Outlet Pipe LH (303-12A Intake Air Distribution and Filtering - V8 5.0L Petrol, Removal and Installation).

12. Refer to: Air Cleaner Outlet Pipe RH (303-12A Intake Air Distribution and Filtering - V8 5.0L Petrol, Removal and Installation).

13. Refer to: Air Cleaner Outlet Pipe T-Connector (303-12B Intake Air Distribution and Filtering - V8 S/C 5.0L Petrol, Removal and Installation).

14. Refer to: Air Cleaner RH (303-12A Intake Air Distribution and Filtering - V8 5.0L Petrol, Removal and Installation).

15. Refer to: Air Cleaner LH (303-12A Intake Air Distribution and Filtering - V8 5.0L Petrol, Removal and Installation).

16. Refer to: Hood Latch Panel (501-02 Front End Body Panels, Removal and Installation).

17. **CAUTION:**

Be prepared to collect escaping coolant.

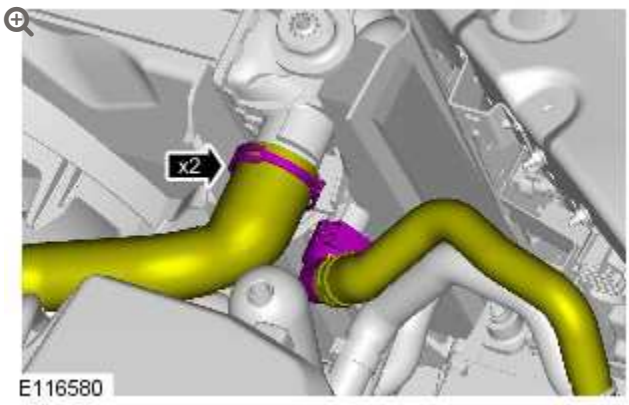

18.

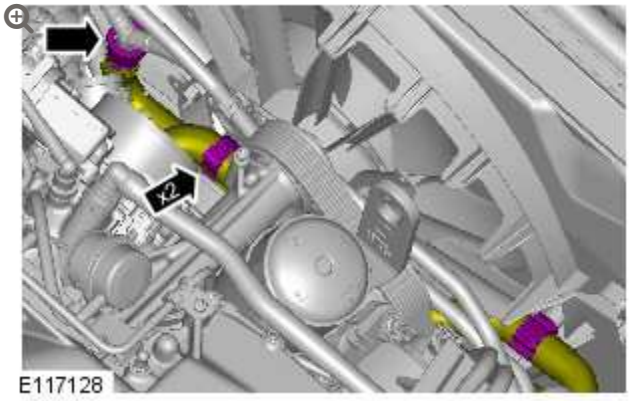

19.

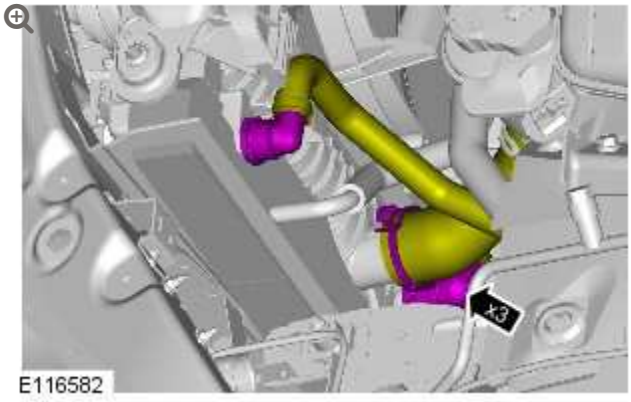

20.

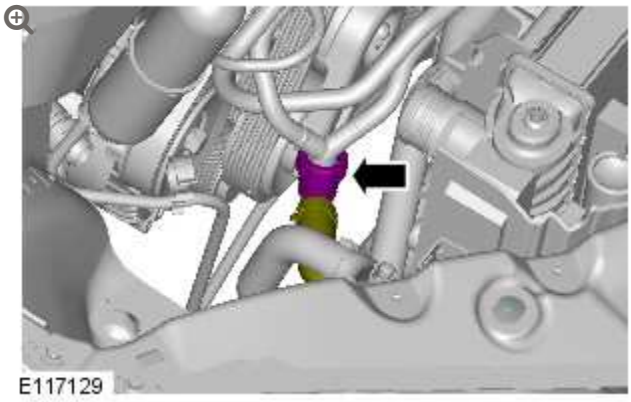

21.

CAUTION:

Be prepared to collect escaping coolant.

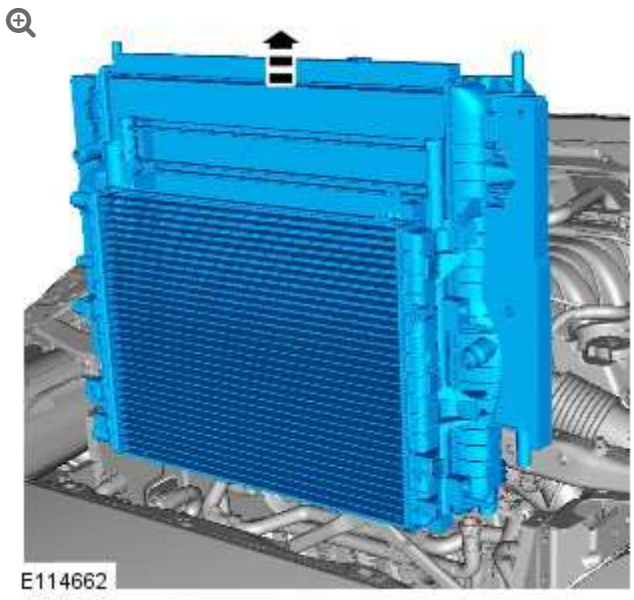

INSTALLATION

1. To install, reverse the removal procedure.

ENGINE COOLING – V8 5.0L PETROL/V8 S/C 5.0L PETROL

COOLING SYSTEM DRAINING AND VACUUM FILLING (G1224153)

GENERAL PROCEDURES

26.10.05	COOLANT – DRAIN, FLUSH AND VACUUM FILL	5000 CC, AJ V8	1.1	USED WITHINS
26.10.05	COOLANT – DRAIN, FLUSH AND VACUUM FILL	AJ V8	0.9	USED WITHINS
26.10.05	COOLANT – DRAIN, FLUSH AND VACUUM FILL	AJ V8, SUPERCHARGED	1.2	USED WITHINS

DRAINING

NOTE:

Removal steps in this procedure may contain installation details.

1. Disconnect the battery ground cable.
   Refer to: Specifications (414-00, Specifications).

2. Refer to: Engine Cover - 5.0L (501-05, Removal and Installation).

3. **WARNING:**

   Do not work on or under a vehicle supported only by a jack. Always support the vehicle on safety stands.

   Raise and support the vehicle.

4. Refer to: Radiator Splash Shield (501-02, Removal and Installation).

5. **WARNING:**

   Release the cooling system pressure by slowly turning the coolant expansion tank cap a quarter of a turn. Cover the expansion tank cap with a thick cloth to prevent the possibility of scalding. Failure to follow this instruction may result in personal injury.

CAUTIONS:

- Since injury such as scalding could be caused by escaping steam or coolant, make sure the vehicle cooling system is cool prior to carrying out this procedure
- Be prepared to collect escaping coolant.

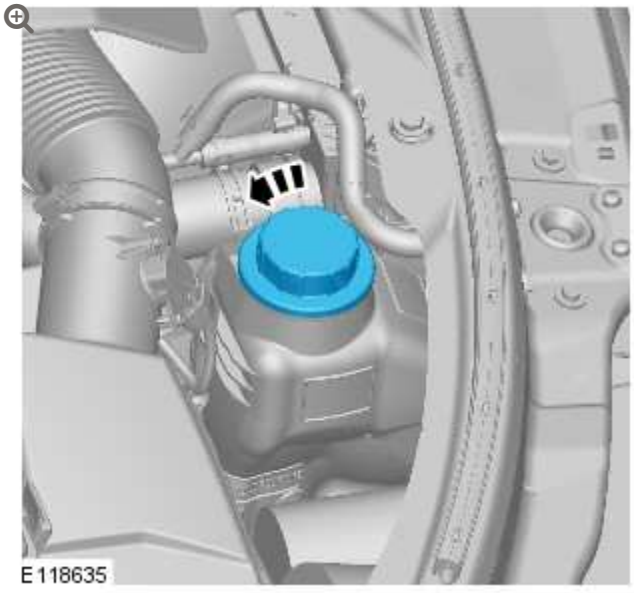

6.

CAUTION:

Be prepared to collect escaping coolant.

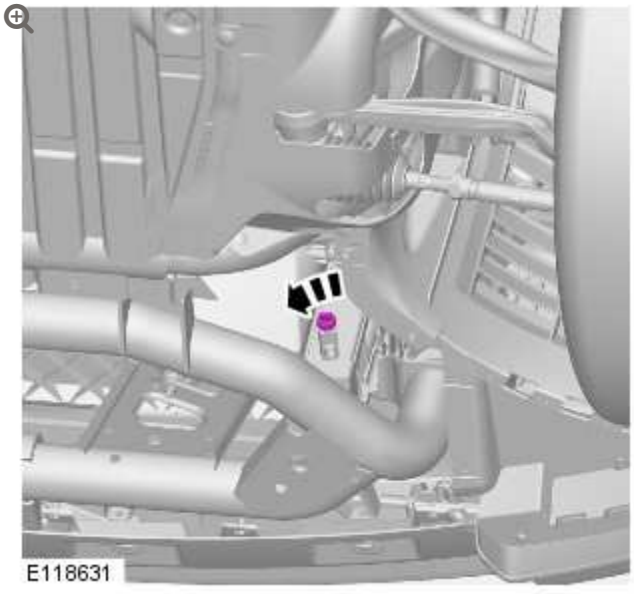

- Position a container to collect the fluid.
- Attach a hose to the radiator drain tap. Open the tap.

7.

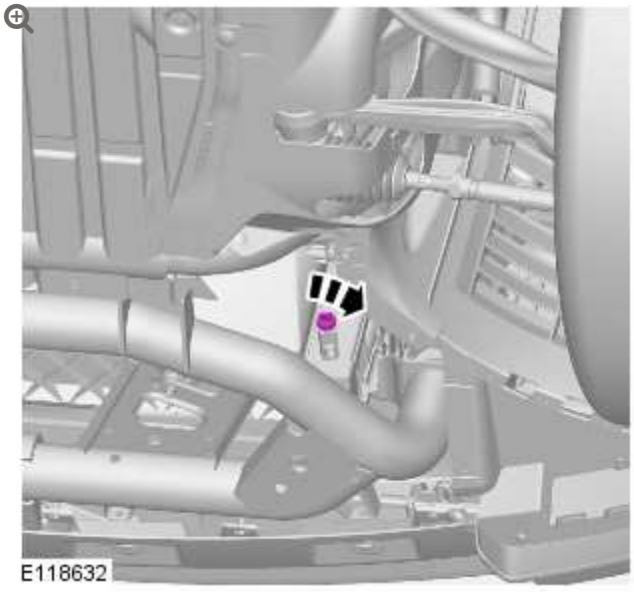

Torque: **2 Nm**

FILLING

NOTE:

Removal steps in this procedure may contain installation details.

8. Refer to: Radiator Splash Shield (501-02, Removal and Installation).

9. Lower the vehicle.

10. **CAUTION:**

    Anti-freeze concentration must be maintained at 50%.

    1. Install the cooling system vacuum refill adaptor to the expansion tank.
    2. Install the vacuum filler gauge to the cooling system vacuum refill adaptor.
    3. Install the venturi tube assembly to the vacuum filler gauge.

11. **NOTES:**

    - Make sure the coolant supply valve is in the closed position on the vacuum filler gauge assembly.
    - The coolant vacuum fill tool needs an air pressure of 6 to 8 bar (87 to 116 psi) to operate correctly.
    - Small diameter or long airlines may restrict airflow to the coolant vacuum fill tool.

Connect a regulated compressed air supply to the venturi tube assembly.

12. Position the evacuated air hose into a container.

13. Open the air supply valve.

14. **NOTE:**

> Make sure the coolant supply hose is positioned into a container of fifty percent mixture of Jaguar Premium Cooling System Fluid or equivalent, meeting Jaguar specification WSS M97B44-D and fifty percent water. Make sure no air can enter the coolant supply hose.

Open the coolant supply valve for 2 seconds to prime the coolant supply hose.

15. Apply air pressure progressively until the arrow on the vacuum filler gauge reaches the green segment.

16. Disconnect the compressed air supply line.

17. **NOTE:**

> Close the coolant supply valve when the coolant expansion tank MAX mark is reached or coolant movement has ceased.

Open the coolant supply valve and allow the coolant to be drawn into the system.

18.

Remove the vacuum filler gauge and cooling system vacuum refill adaptor assembly.

19. 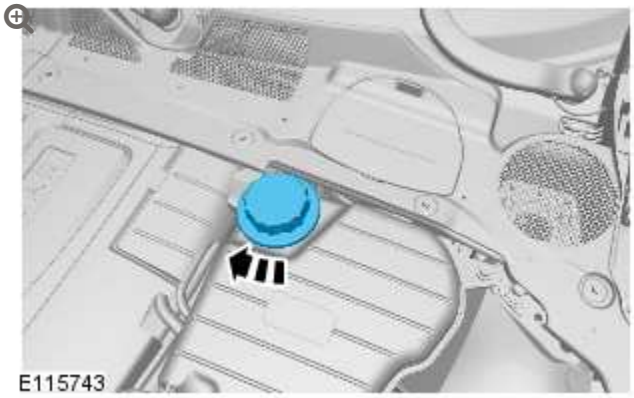

20. Set the heater controls to maximum.

21. **CAUTION:**

> Observe the engine temperature gauge. If the engine starts to over-heat switch off immediately and allow to cool. Failure to follow this instruction may cause damage to the vehicle

Start the engine and idle until hot air is emited at the face registers.

22. Switch the heater off.

23. Raise the engine speed to 2000 RPM for eight minutes.

24. **CAUTION:**

> Switch off the engine and allow the coolant temperature to go cold.

25. Visually check the engine and cooling system for signs of coolant leakage.

26. **WARNING:**

When releasing the cooling system pressure, cover the coolant expansion tank cap with a thick cloth.

CAUTIONS:

- Since injury such as scalding could be caused by escaping steam or coolant, make sure the vehicle cooling system is cool prior to carrying out this procedure
- Make sure the coolant level remains above the "COLD FILL RANGE" lower level mark.

NOTE:

When the cooling system is warm, the coolant will be approximately 10mm above the upper level mark on the expansion tank with the cap removed.

Check and top-up the coolant if required.

ENGINE COOLING - V8 5.0L PETROL/V8 S/C 5.0L PETROL

COOLING SYSTEM PARTIAL DRAINING AND VACUUM FILLING (G1313553)

GENERAL PROCEDURES

26.10.09	COOLANT - PARTIAL DRAINING AND VACUUM FILL	5000 CC, AJ V8, SUPERCHARGED	0.8	USED WITHINS	+

SPECIAL TOOL(S)



HU-919

Coolant System Vacuum Refill Kit

DRAINING

WARNING:

Since injury such as scalding could be caused by escaping steam or coolant, do not remove the filler cap from the coolant expansion tank while the system is hot.

CAUTIONS:

- The engine cooling system must be maintained with the correct concentration and type of anti-freeze solution to prevent corrosion and frost damage. Failure to follow this instruction may result in damage to the engine.
- Engine coolant will damage the paint finished surfaces. If spilt, immediately remove the coolant and clean the area with water.

NOTE:

Removal steps in this procedure may contain installation details.

ℹ	All vehicles

1.

WARNING:

Since injury such as scalding could be caused by escaping steam or coolant, do not remove the filler cap from the coolant expansion tank while the system is hot.

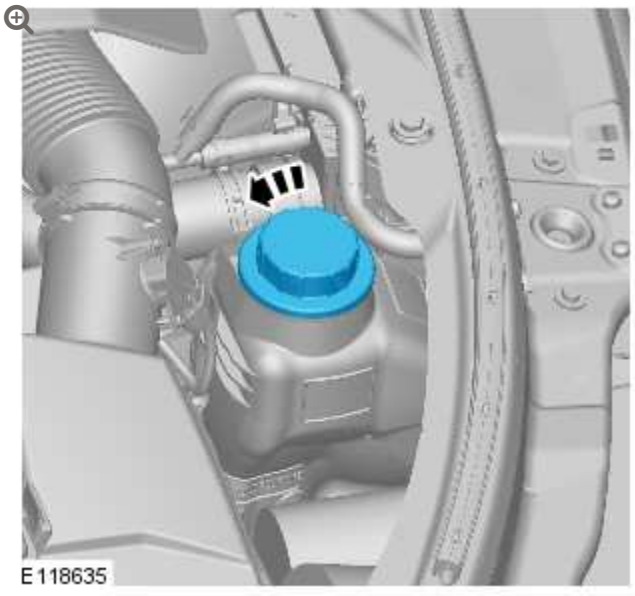

2.

WARNING:

Make sure to support the vehicle with axle stands.

Raise and support the vehicle.

3. For additional information, refer to: Radiator Splash Shield (501-02 Front End Body Panels, Removal and Installation).

	Vehicles with 5.0L engine

4.

WARNING:

Eye protection must be worn.

CAUTION:

Be prepared to collect escaping fluids.

NOTE:

Collect the coolant in a clean container and reuse.

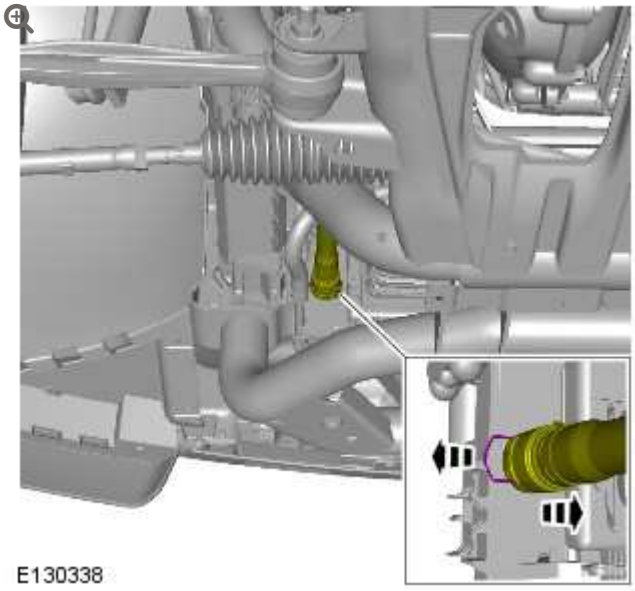

- Position a container to collect the fluid.

5.

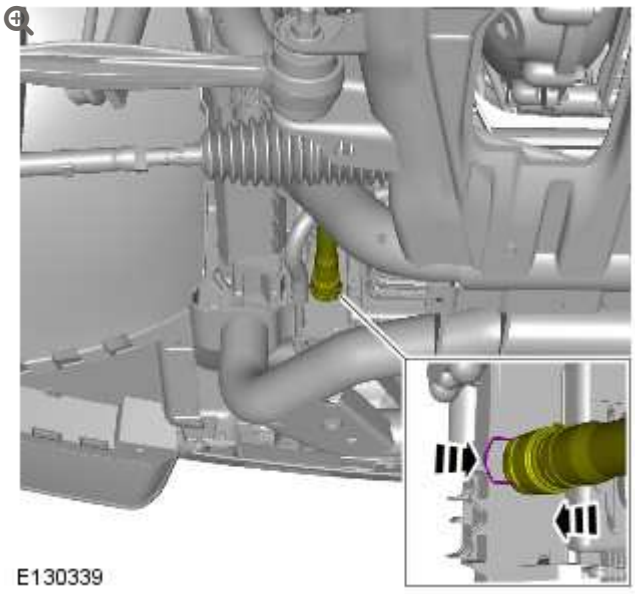

- Remove the container.

	Vehicles with 3.6L diesel engine

6.



Drain the coolant.

- Position a container to collect the fluid.
- Attach a hose to the radiator drain tap.
- Open the radiator drain tap.

7. Close the radiator drain tap and remove the hose.
   - Remove the container.

	Vehicles with 4.4L diesel engine

8.

WARNING:

Eye protection must be worn.

CAUTION:

Be prepared to collect escaping fluids.

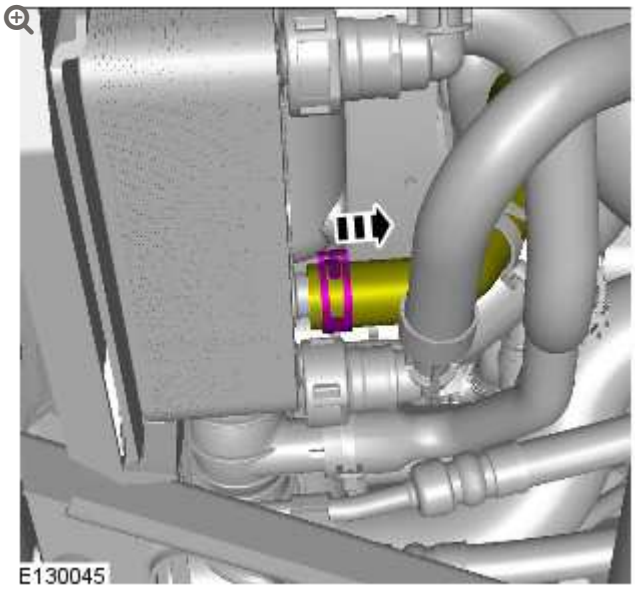

- Position a container to collect the fluid.

9.

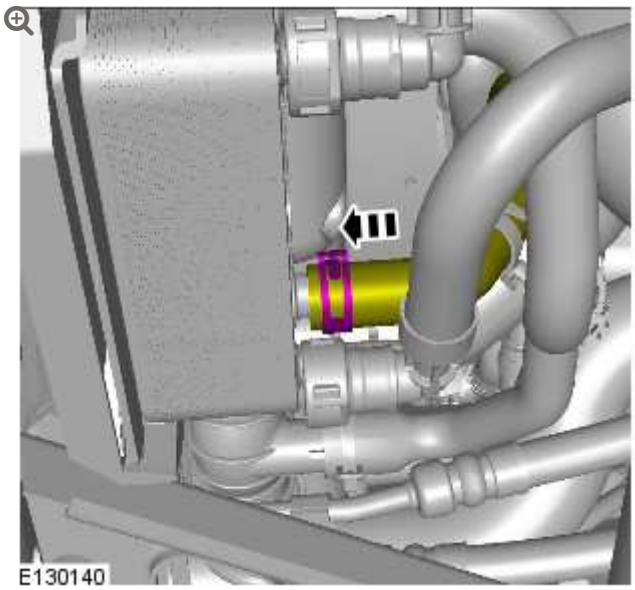

- Remove the container.

FILLING

1. For additional information, refer to: Radiator Splash Shield (501-02 Front End Body Panels, Removal and Installation).

2. Prepare a sufficient amount of coolant to the specified concentration.

3. **NOTES:**

   - Make sure the coolant supply valve is in the closed position on the special tool.
   - The special tool needs an air pressure of 6 to 8 bar (87 to 116 psi) to operate correctly.
   - Small diameter or long airlines may restrict airflow to the coolant vacuum fill tool.

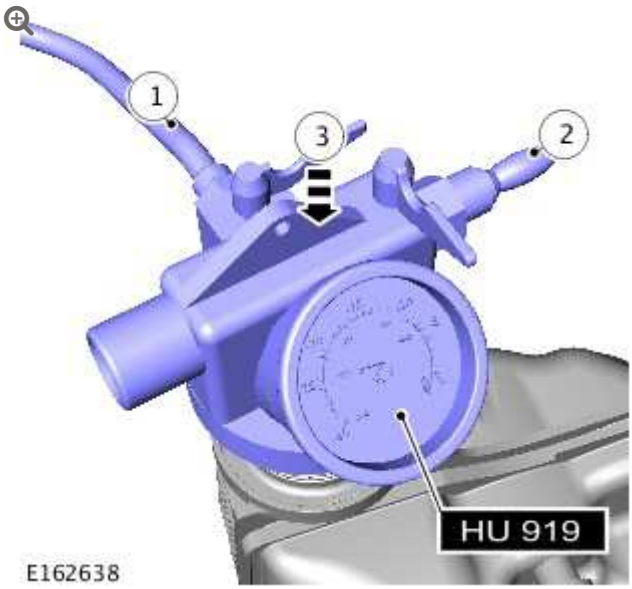

1. Position the hose from the special tool into a container of clean coolant.
2. Connect a regulated compressed air supply to the special tool.
3. Move the special tool to the expansion tank.

4.

NOTES:

- Make sure the coolant supply valve is in the closed position on the special tool.
- The coolant vacuum fill tool needs an air pressure of 6 to 8 bar (87 to 116 psi) to operate correctly.
- Small diameter or long airlines may restrict airflow to the coolant vacuum fill tool.

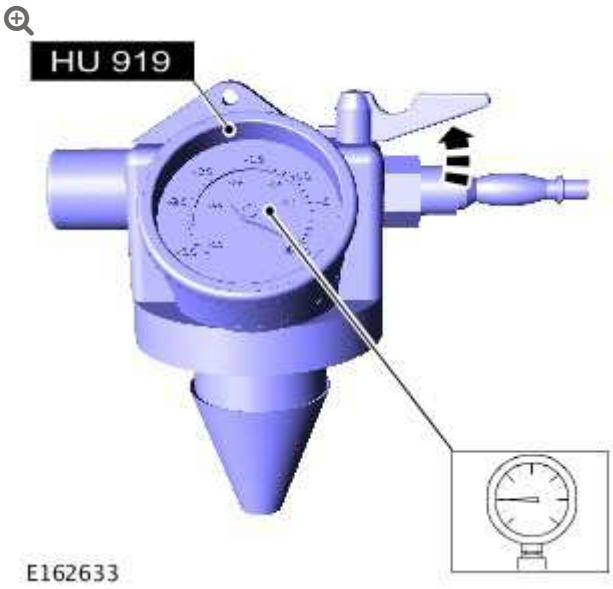

Open the air supply valve until -0.8 Bar (-12 psi) is shown on the gauge.

5.

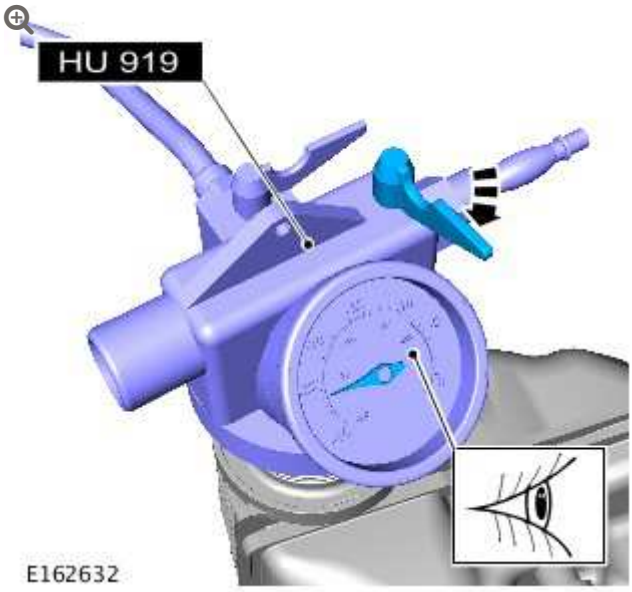

- Close the air supply valve.
- Allow 1 minute to check the vacuum is held.

6.

NOTES:

- The coolant is to be reused.
- Close the coolant supply valve when the coolant expansion tank MAX mark is reached or coolant movement has stopped.

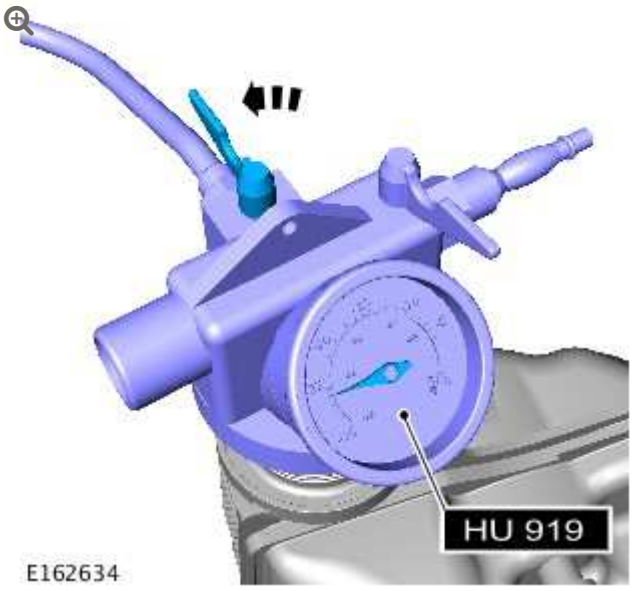

Open the coolant supply valve and allow the coolant to be drawn into the system.

7. Remove the special tool.

8. Connect exhaust extraction hoses to the tail pipes.

9. Start and run the engine.

10. Install the coolant expansion tank cap.

11. Hold the engine speed at 2000 revolutions per minute (RPM) until warm air is expelled from the heater.

12. Switch the engine off and allow to cool.

13. Clean any spilt or excess coolant from the vehicle.

14. **WARNING:**

> Since injury such as scalding could be caused by escaping steam or coolant, allow the vehicle cooling system to cool prior to carrying out this procedure.

Check and top-up the coolant if required.

COOLING SYSTEM PARTIAL DRAINING, FILLING AND BLEEDING – V8 S/C 5.0L PETROL (G1341838)

GENERAL PROCEDURES

DRAINING

WARNING:

Since injury such as scalding could be caused by escaping steam or coolant, do not remove the filler cap from the coolant expansion tank while the system is hot.

CAUTIONS:

- The engine cooling system must be maintained with the correct concentration and type of anti-freeze solution to prevent corrosion and frost damage. Failure to follow this instruction may result in damage to the engine.
- Engine coolant will damage the paint finished surfaces. If spilt, immediately remove the coolant and clean the area with water.

NOTE:

Removal steps in this procedure may contain installation details.

1. Refer to: Air Cleaner Outlet Pipe T-Connector (303-12, Removal and Installation).
2. **WARNING:**

   Since injury such as scalding could be caused by escaping steam or coolant, do not remove the filler cap from the coolant expansion tank while the system is hot.

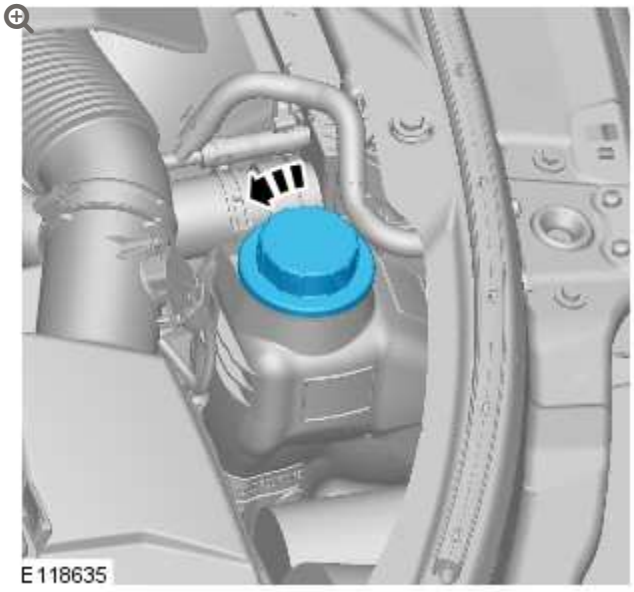

3. **WARNING:**

   Make sure to support the vehicle with axle stands.

   Raise and support the vehicle.

4. Refer to: Radiator Splash Shield (501-02, Removal and Installation).

5. **WARNING:**

   Eye protection must be worn.

   CAUTION:

   Be prepared to collect escaping fluids.

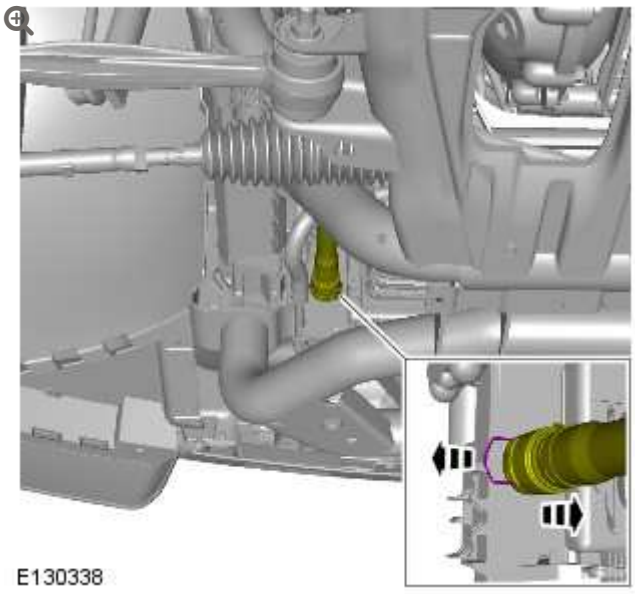

- Allow the coolant to drain.
- Position a container to collect the fluid.

6.

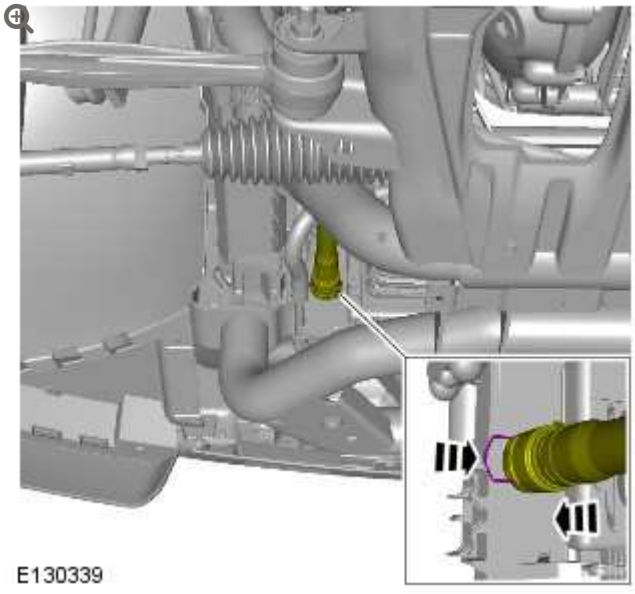

Remove the container.

FILLING

WARNING:

Since injury such as scalding could be caused by escaping steam or coolant, do not remove the filler cap from the coolant expansion tank while the system is hot.

CAUTIONS:

- The engine cooling system must be maintained with the correct concentration and type of anti-freeze solution to prevent corrosion and frost damage. Failure to follow this instruction may result in damage to the engine.
- Engine coolant will damage the paint finished surfaces. If spilt, immediately remove the coolant and clean the area with water.

NOTE:

Removal steps in this procedure may contain installation details.

7.

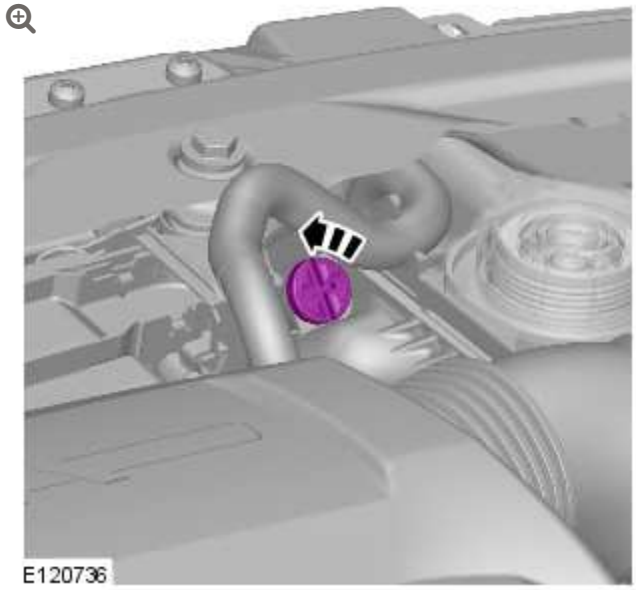

8.

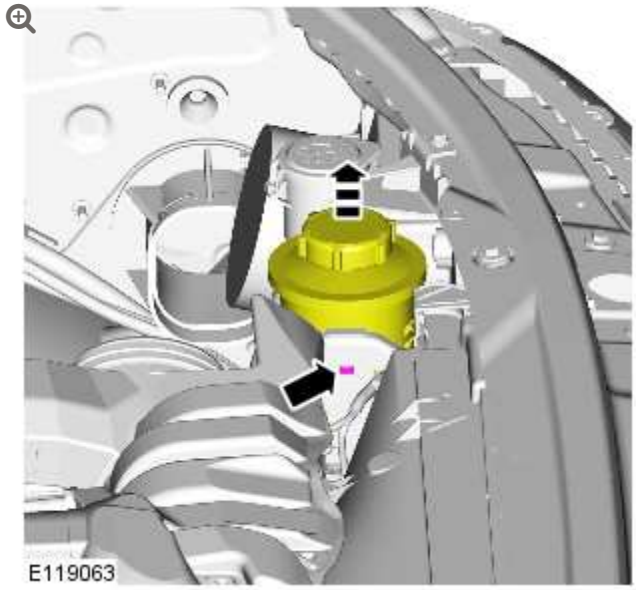

9.

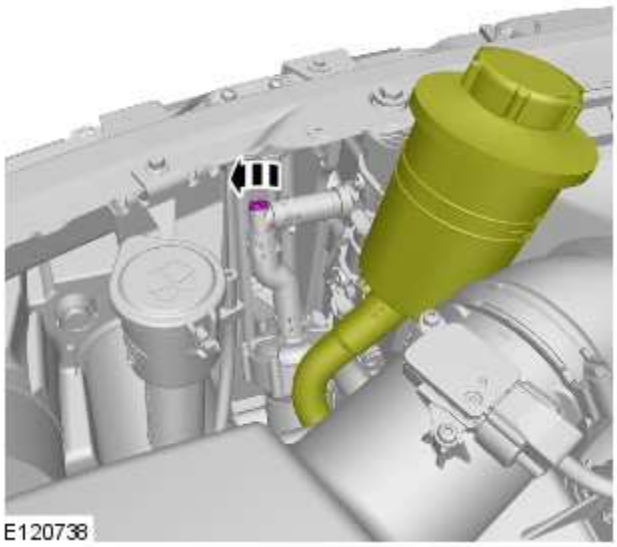

10.

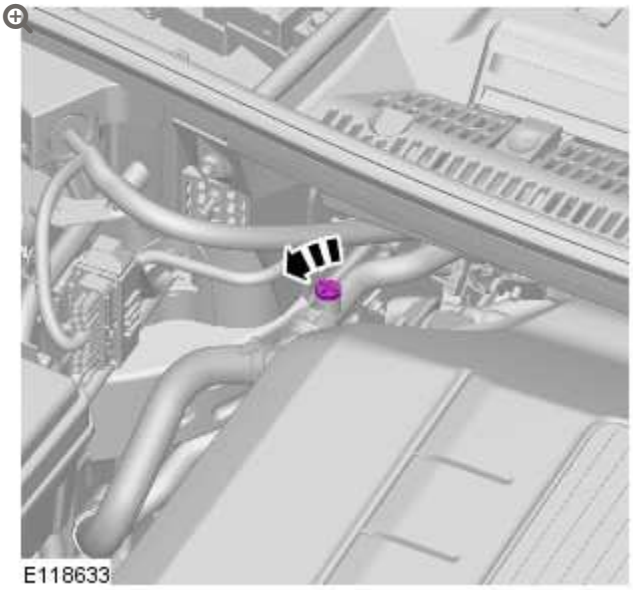

11.

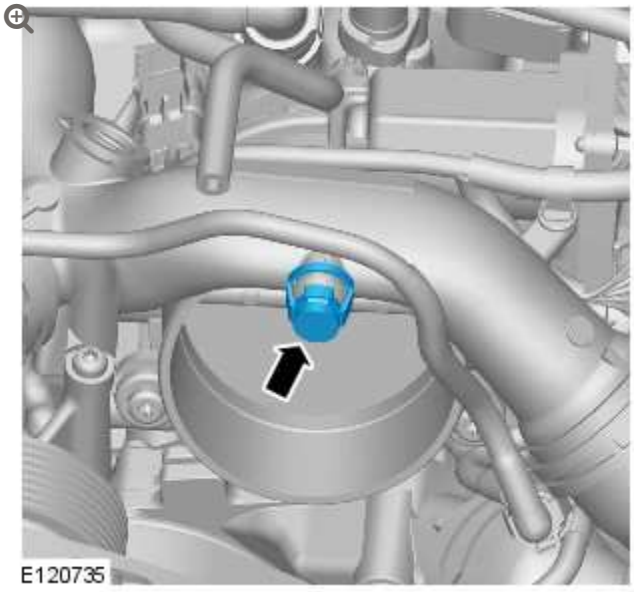

12. Fill the coolant expansion tank until coolant appears through the bleed ports.

13. **CAUTIONS:**

- Anti-freeze concentration must be maintained at 50%.
- Be prepared to collect escaping coolant.

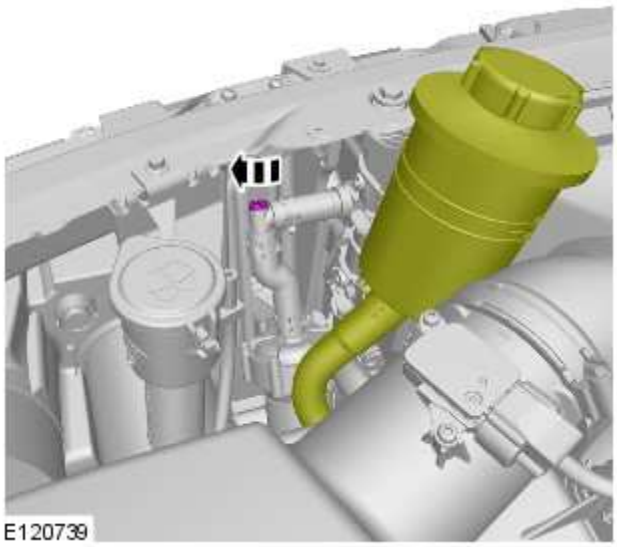

14.

CAUTION:

Be prepared to collect escaping coolant.

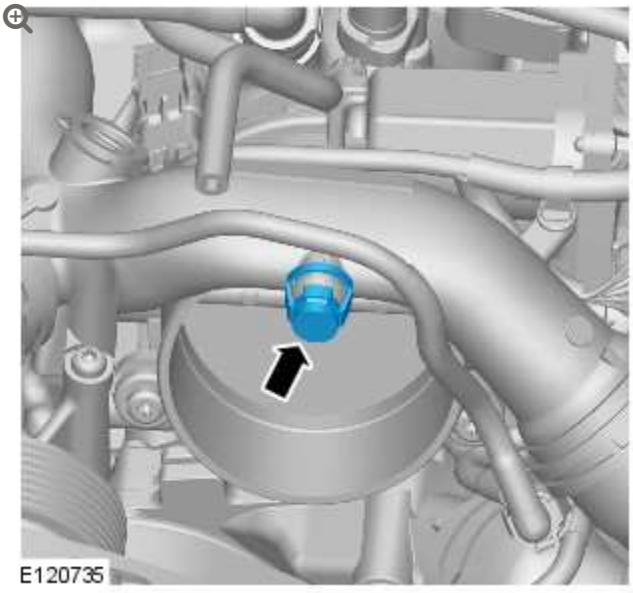

15.

CAUTION:

Be prepared to collect escaping coolant.

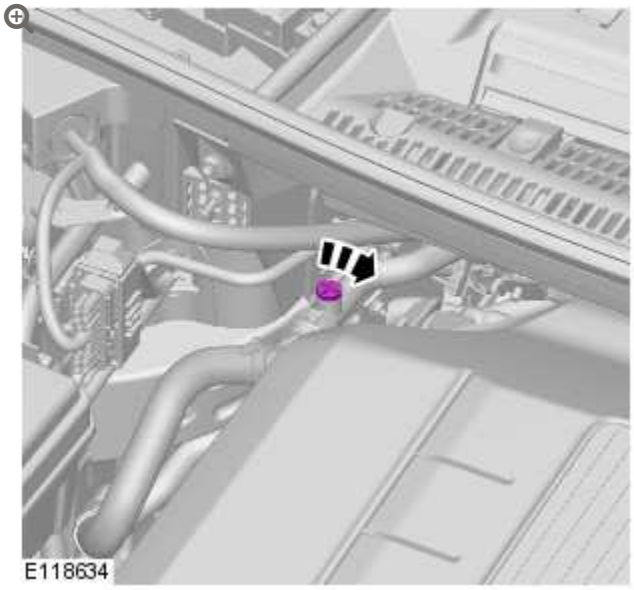

16.

CAUTION:

Be prepared to collect escaping coolant.

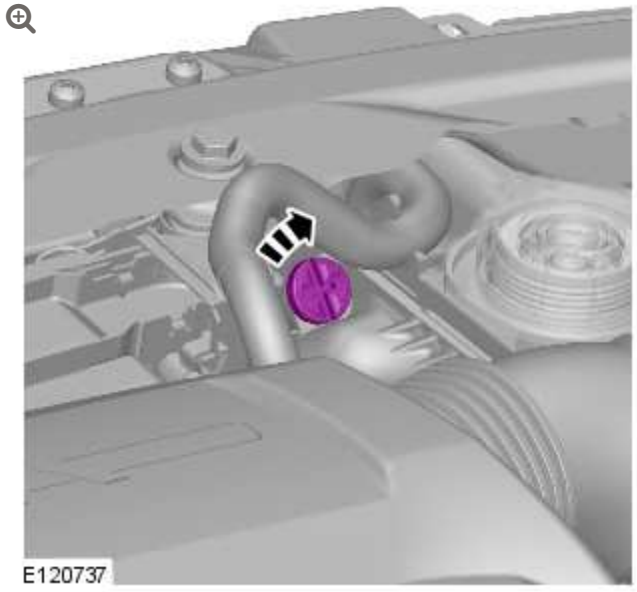

17. Continue to fill the coolant until the maximum level is reached.

18. Set the heater controls to maximum.

19. **CAUTION:**

    Anti-freeze concentration must be maintained at 50%.

    Start the engine and continue to fill the coolant until the maximum level is reached.

20. Increase the engine speed to 1500 rpm.

21. Check if the front heater is warm after 2 minutes, if warm proceed to step 17.

22. If not, turn the engine off for 10 seconds and then start the engine and return to step 13.

23.

Once the front heater is warm, check if the rear heater is warm (if equipped). If no heat is felt, increase the engine speed to 3000 rpm for 30 seconds and repeat until the heater is warm and return to idle.

24. Continue filling with coolant until the level stops dropping and top up to 65mm below rim (to top rib on back of the coolant expansion tank).

25. **CAUTION:**

> Correct installation of the Coolant expansion tank cap can be obtained by tightening the cap until an audible click is heard.

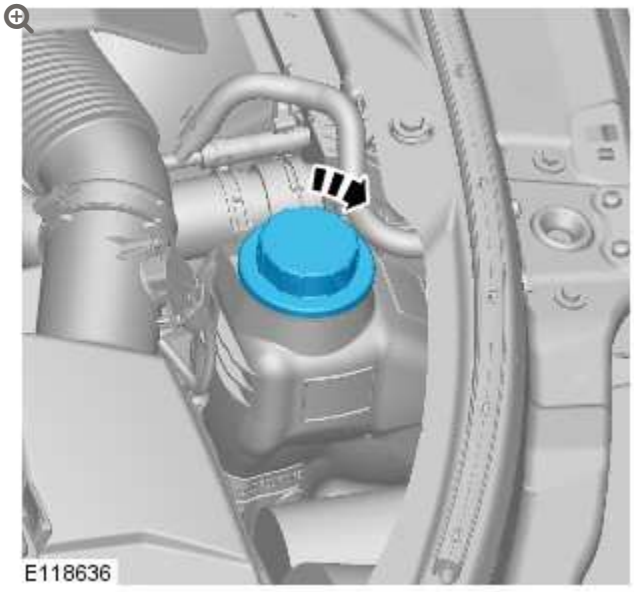

26. Switch the heater off.

27. Raise the engine speed to 2000 RPM for eight minutes.

28.

CAUTION:

Switch off the engine and allow the coolant temperature to go cold.

Switch the engine off and allow to cool.

29. Visually check the engine and cooling system for signs of coolant leakage.

30. **WARNING:**

When releasing the cooling system pressure, cover the coolant expansion tank cap with a thick cloth.

CAUTIONS:

- Since injury such as scalding could be caused by escaping steam or coolant, make sure the vehicle cooling system is cool prior to carrying out this procedure
- Make sure the coolant level remains above the "COLD FILL RANGE" lower level mark.

NOTE:

When the cooling system is warm, the coolant will be approximately 10mm above the upper level mark on the expansion tank with the cap removed.

Check and top-up the coolant if required.

31. Refer to: Radiator Splash Shield (501-02, Removal and Installation).

32. Refer to: Air Cleaner Outlet Pipe T-Connector (303-12, Removal and Installation).

ENGINE COOLING – V8 5.0L PETROL/V8 S/C 5.0L PETROL

SPECIFICATIONS

Lubricants

NOTE:

Coolant must be collected into a clean container and can be reused if not contaminated.

DESCRIPTION	SPECIFICATION
Coolant	Havoline Extended Life Coolant (XLC)
Coolant concentration	50%

Capacities

ITEM	SPECIFICATION
Vehicles with supercharger - vehicles fitted with 4 zone Air Conditioning (A/C)	20.5L (dry capacity)
Vehicles without supercharger - vehicles fitted with 4 zone Air Conditioning (A/C)	16.6L (dry capacity)
Vehicles with supercharger - vehicles fitted with 2 zone Air Conditioning (A/C)	19.8L (dry capacity)

ITEM	SPECIFICATION
Vehicles without supercharger - vehicles fitted with 2 zone Air Conditioning (A/C)	15.9L (dry capacity)

Torque Specifications

DESCRIPTION	NM	LB-FT	LB-IN
Coolant expansion tank retaining bolt	10	7	-
Cooling fan assembly retaining nut	65	48	-
Thermostat housing retaining bolts	10	7	-
Coolant pump retaining bolts	12	9	-
Radiator drain plug	2	-	18
Coolant bleed screw(s)	3	-	27

ENGINE COOLING – V8 5.0L PETROL/V8 S/C 5.0L PETROL

DIAGNOSIS AND TESTING

PRINCIPLE OF OPERATION

For a detailed description of the engine cooling system and operation, refer to the relevant Description and Operation section of the workshop manual. REFER to: Engine Cooling (303-03A Engine Cooling - V8 5.0L Petrol/V8 S/C 5.0L Petrol, Description and Operation).

INSPECTION AND VERIFICATION

CAUTION:

Diagnosis by substitution from a donor vehicle is **NOT** acceptable. Substitution of control modules does not guarantee confirmation of a fault and may also cause additional faults in the vehicle being checked and/or the donor vehicle.

NOTE:

Check and rectify basic faults before beginning diagnostic routines involving pinpoint tests.

1. Verify the customer concern.
2. Visually inspect for obvious signs of mechanical or electrical damage.

Visual Inspection

MECHANICAL	ELECTRICAL
▪ Coolant leaks ▪ Coolant Hoses ▪ Coolant expansion tank ▪ Radiator ▪ Heater core ▪ Accessory drive belt ▪ Viscous fan	▪ Fuses ▪ Harnesses ▪ Loose or corroded connector(s) ▪ Engine Coolant Temperature (ECT) sensor

3. If an obvious cause for an observed or reported concern is found, correct the cause (if possible) before proceeding to the next step.
4. If the cause is not visually evident, verify the symptom and refer to the Symptom Chart, alternatively check for Diagnostic Trouble Codes (DTCs) and refer to the DTC Index.

SYMPTOM CHART

SYMPTOM	POSSIBLE CAUSES	ACTION

SYMPTOM	POSSIBLE CAUSES	ACTION
Coolant loss	▪ Hoses ▪ Hose connections ▪ Radiator ▪ Water pump ▪ Heater core ▪ Gaskets ▪ Engine casting cracks ▪ Engine block core plugs	Carry out a visual inspection. If there are no obvious leaks, carry out a cooling system pressure test. Rectify any leaks as necessary.
Overheating	▪ Low/Contaminated coolant ▪ Thermostat ▪ Viscous fan ▪ ECT sensor ▪ Restricted air flow over the radiator	Check the coolant level and condition. Carry out a cooling system pressure test. Rectify any leaks as necessary. Check the thermostat and rectify as necessary. Check the viscous fan operation, make sure the viscous fan rotates freely. Check for obstructions to the air flow over the radiator. Rectify as necessary.
Engine not reaching normal temperature	▪ Thermostat ▪ Viscous fan ▪ Thermostat ▪ Electric fan ▪ Fan speed module	Check the thermostat operation. Check the viscous fan operation, make sure the viscous fan is not seized. Rectify as necessary.

DTC INDEX

For a list of Diagnostic Trouble Codes (DTCs) that could be logged on this vehicle, please refer to Section 100-00. REFER to: Diagnostic Trouble Code (DTC) Index - V8 5.0L Petrol/V8 S/C 5.0L Petrol (100-00 General Information, Description and Operation).

ENGINE COOLING – V8 5.0L PETROL/V8 S/C 5.0L PETROL

RADIATOR – V8 S/C 5.0L PETROL (G1224085)

REMOVAL AND INSTALLATION

26.40.01	RADIATOR ASSEMBLY – RENEW	5000 CC, AJ V8, SUPERCHARGED	3.4	USED WITHINS	+

REMOVAL

NOTE:

Removal steps in this procedure may contain installation details.

1. Disconnect the battery ground cable.
   Refer to: Specifications (414-00 Battery and Charging System - General Information, Specifications).

2. **WARNING:**

   Make sure to support the vehicle with axle stands.

   Raise and support the vehicle.

3. Refer to: Cooling System Partial Draining and Vacuum Filling (303-03B, General Procedures).

4. Refer to: Cooling Fan - V8 S/C 5.0L Petrol (303-03A Engine Cooling - V8 5.0L Petrol/V8 S/C 5.0L Petrol, Removal and Installation).

5. Refer to: Hood Latch Panel (501-02 Front End Body Panels, Removal and Installation).

6. **NOTE:**

> Some variation in the illustrations may occur, but the essential information is always correct.

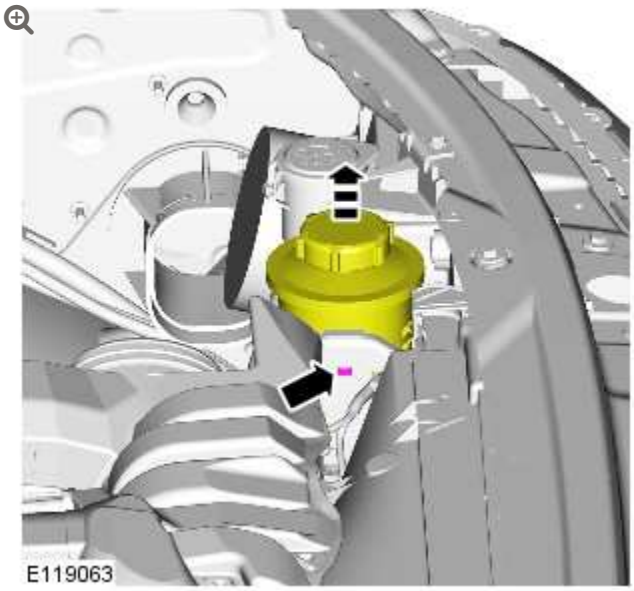

7.

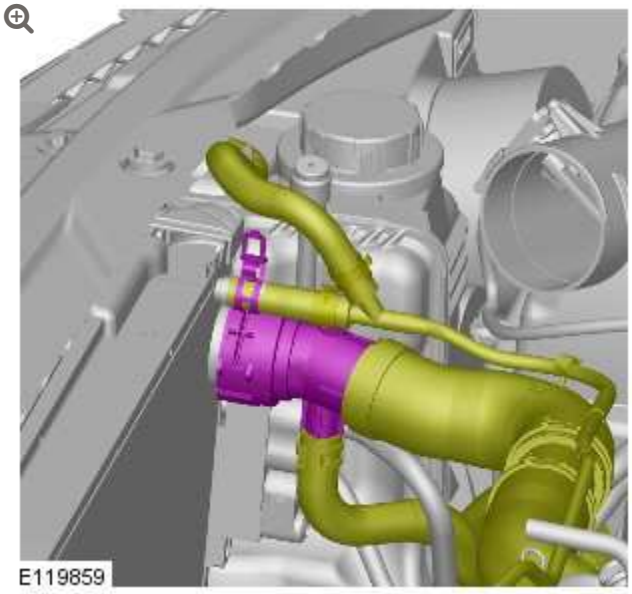

8.

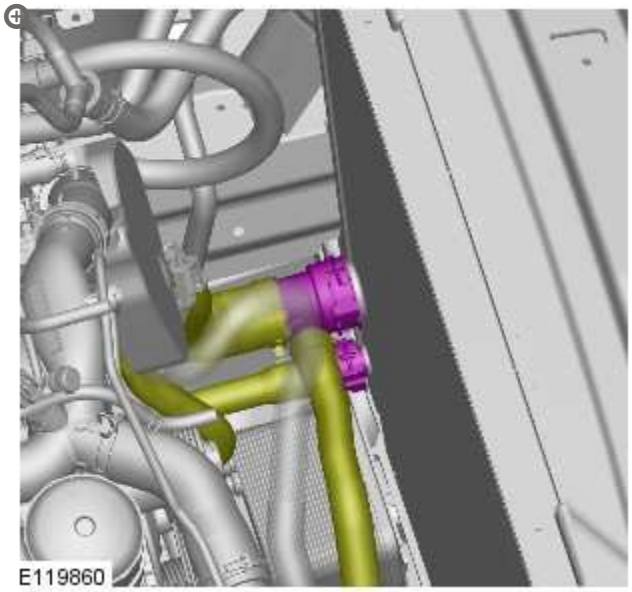

9.

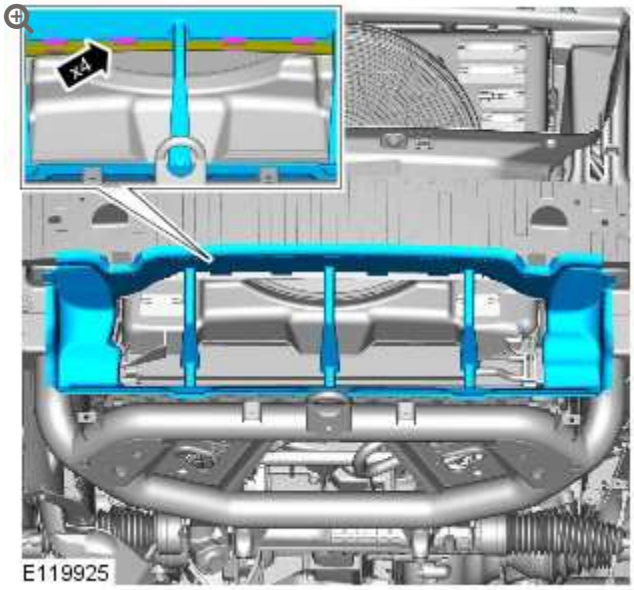

10.

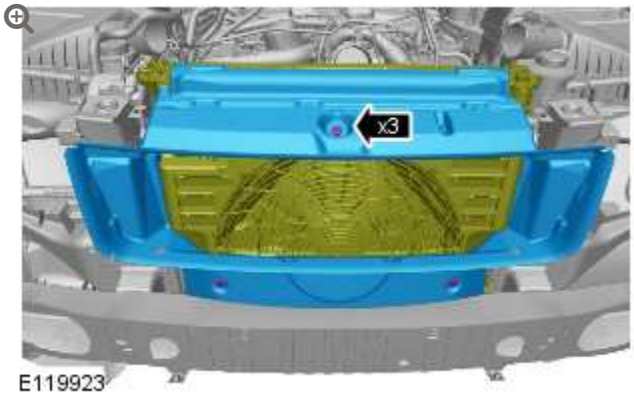

11.

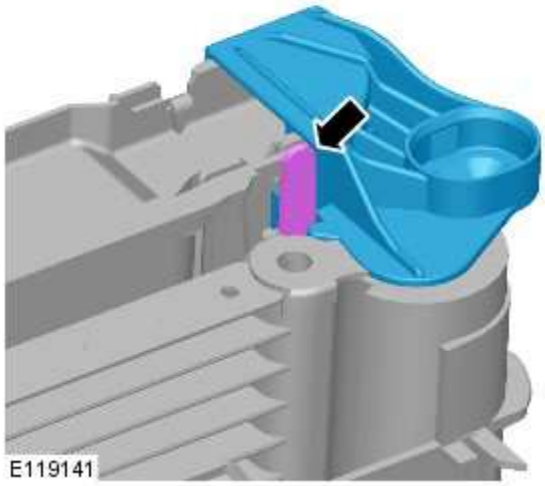

12.

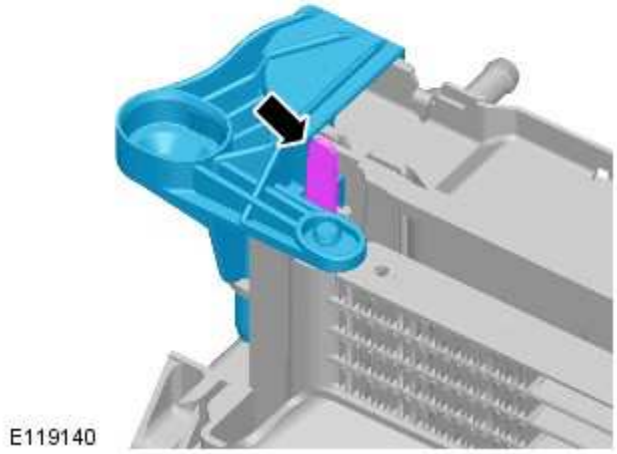

13.

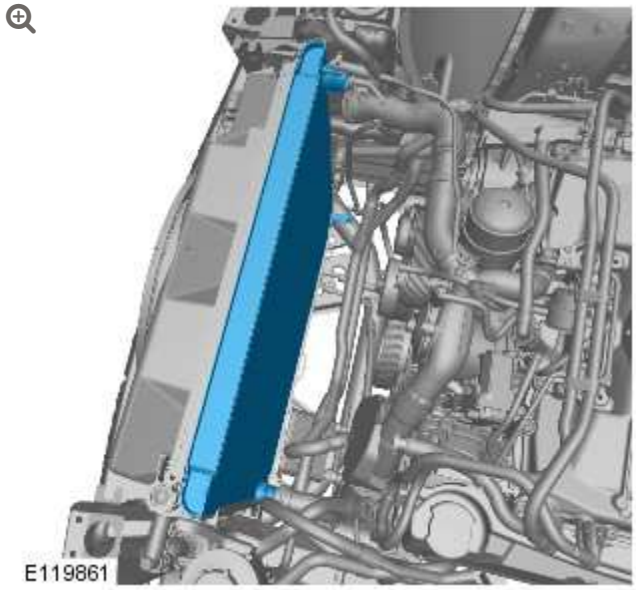

INSTALLATION

1. To install reverse the removal procedure.

ENGINE COOLING - V8 5.0L PETROL/V8 S/C 5.0L PETROL

THERMOSTAT HOUSING - V8 S/C 5.0L PETROL (G1224160)

REMOVAL AND INSTALLATION

26.45.10	HOUSING - THERMOSTAT - RENEW	5000 CC, AJ V8, SUPERCHARGED	1.2	USED WITHINS	+

REMOVAL

NOTE:

Removal steps in this procedure may contain installation details.

1. Disconnect the battery ground cable.
   Refer to: Specifications (414-00 Battery and Charging System - General Information, Specifications).

2. **WARNING:**

   Make sure to support the vehicle with axle stands.

   Raise and support the vehicle.

3. Refer to: Cooling System Partial Draining and Vacuum Filling (303-03B, General Procedures).

4. Refer to: Air Cleaner Outlet Pipe T-Connector (303-12B Intake Air Distribution and Filtering - V8 S/C 5.0L Petrol, Removal and Installation).

5. Refer to: Air Cleaner Outlet Pipe LH (303-12A Intake Air Distribution and Filtering - V8 5.0L Petrol, Removal and Installation).

6. 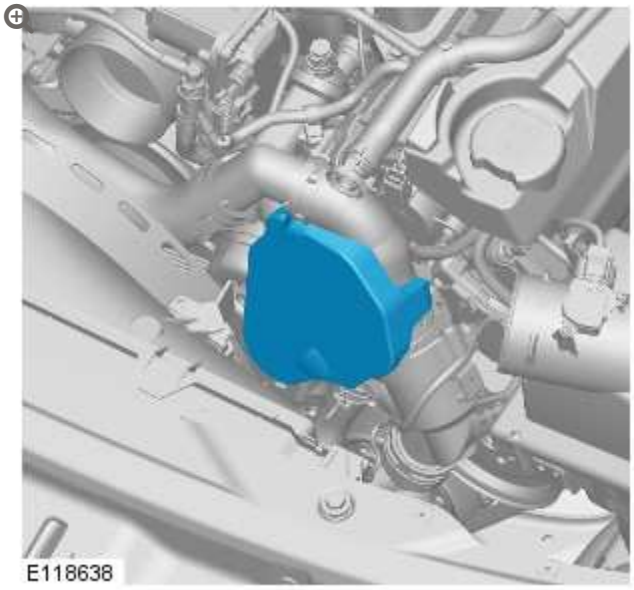

7.

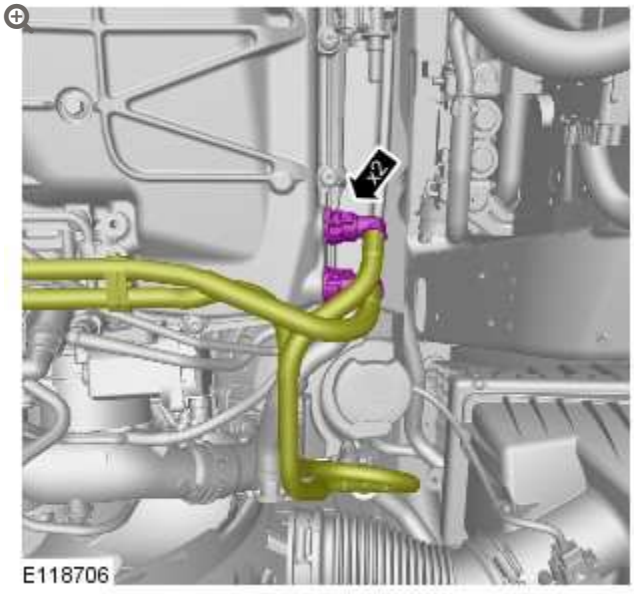

8.

NOTE:

Some variation in the illustrations may occur, but the essential information is always correct.

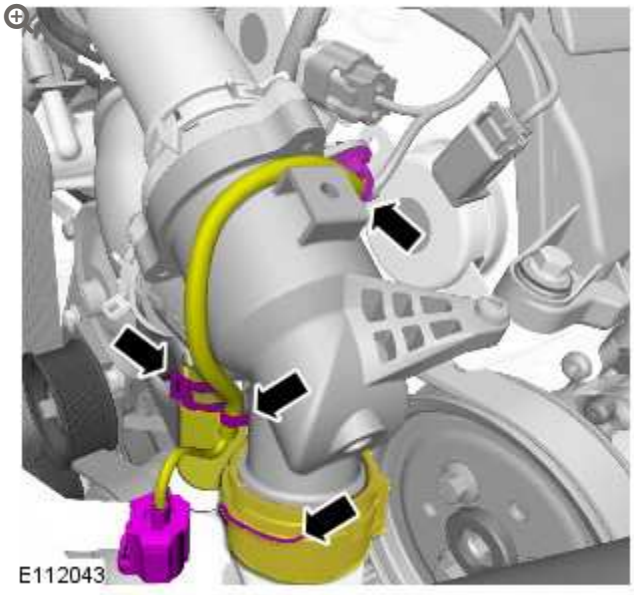

9.

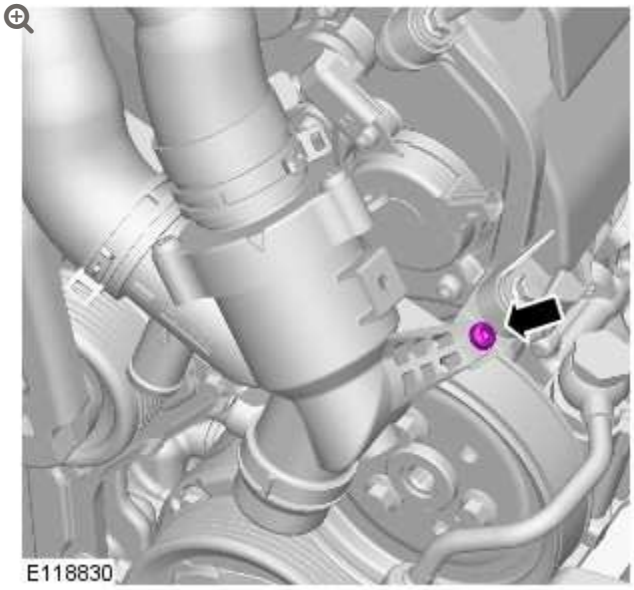

Torque: **10 Nm**

10.

NOTES:

- Some variation in the illustrations may occur, but the essential information is always correct.
- The retaining clips cannot be removed from the pipe.

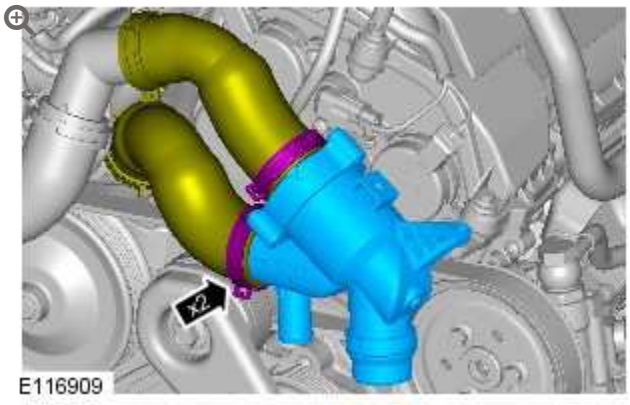

INSTALLATION

1. To install, reverse the removal procedure.

SUPERCHARGER COOLING

SPECIFICATIONS

Torque Specifications

DESCRIPTION	NM	LB-FT
Supercharger coolant pump mounting bracket bolts	6	4

SUPERCHARGER COOLING

COOLANT PUMP (G455371)

REMOVAL AND INSTALLATION

26.50.01	PUMP - WATER - RENEW	5000 CC, AJ V8, SUPERCHARGED	1.5	USED WITHINS	+
26.50.26	AUXILIARY COOLANT PUMP - RENEW	5000 CC, AJ V8, SUPERCHARGED	0.4	USED WITHINS	+

REMOVAL

WARNING:

Since injury such as scalding could be caused by escaping steam or coolant, make sure the vehicle cooling system is cool prior to carrying out this procedure.

CAUTION:

Engine coolant will damage the paint finished surfaces. If spilt, immediately remove the coolant and clean the area with water.

NOTES:

- Some variation in the illustrations may occur, but the essential information is always correct.
- This procedure covers the removal and installation of the supercharger auxiliary coolant pump.

1. Remove the air cleaner.
   For additional information, refer to: Air Cleaner (303-12 Intake Air Distribution and Filtering - 4.2L SC V8 - AJV8, Removal and Installation).

2.

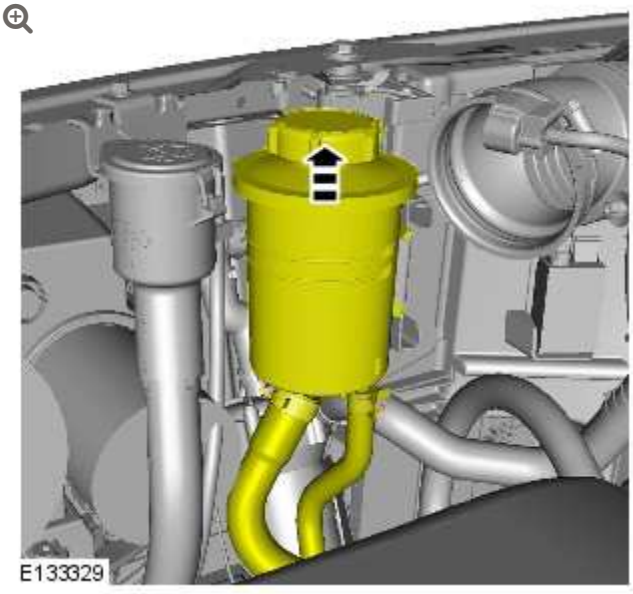

Release the power assisted steering (PAS) reservoir, and move aside.

3.

WARNING:

Fluid loss is unavoidable, use absorbent cloth or a container to collect the fluid.

CAUTION:

Make sure that all openings are sealed. Use new blanking caps.

Disconnect the 2 coolant pump hoses.

- Clamp the relevant hoses, to minimise the coolant loss.
- Release the 2 clips.

4.

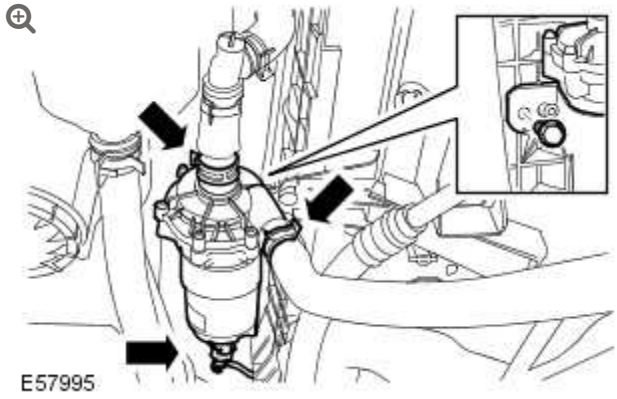

Remove the coolant pump.

- Remove the clamp bolt.
- Disconnect the electrical connector.

INSTALLATION

1. Install the coolant pump and align with bracket register.
   - Connect the electrical connector.
   - Tighten the bolt to 6 Nm (4 lb.ft).
2. Connect the coolant pump hoses.
   - Secure with the clips.
   - Remove the hose clamps.
3. Remove the coolant expansion tank cap.
4.

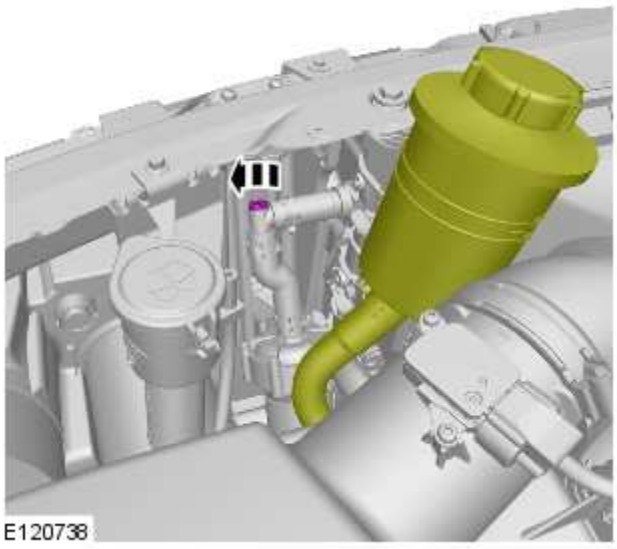

Release the coolant bleed screw.

- When coolant runs from the bleed point bubble-free, tighten the bleed screw.

5. Install the PAS reservoir.

6. Install the air cleaner.
   For additional information, refer to: Air Cleaner (303-12 Intake Air Distribution and Filtering - 4.2L SC V8 - AJV8, Removal and Installation).

7. Check and top-up the coolant.

8. **CAUTION:**

   Damage to the charge air cooler coolant pump will occur if the pump is allowed to cavitate.

NOTE:

With the ignition key turned to position II the charge air coolant pump will run, to aid coolant bleed. Make sure the charge air coolant pump is primed prior to running the pump.

Start the engine and allow to run for 30 seconds, stop the engine.

9. Check and top-up the coolant.

10. **NOTE:**

For NAS vehicles only.

If required, carry out a long drive cycle.
For additional information, refer to: Powertrain Control Module (PCM) Long Drive Cycle Self-Test (303-14 Electronic Engine Controls - 4.2L SC V8 - AJV8, General Procedures).

SUPERCHARGER COOLING

RADIATOR (G455372)

REMOVAL AND INSTALLATION

26.40.10	RADIATOR ASSEMBLY - SUPERCHARGER - RENEW	5000 CC, AJ V8, SUPERCHARGED	2.7	USED WITHINS	+

REMOVAL

1. Disconnect the battery ground cable.
   For additional information, refer to: Specifications (414-00, Specifications).

2. **WARNING:**

   Do not work on or under a vehicle supported only by a jack. Always support the vehicle on safety stands.

   Raise and support the vehicle.

3. Remove the radiator assembly.
   For additional information, refer to: Radiator (303-03, Removal and Installation).

4.

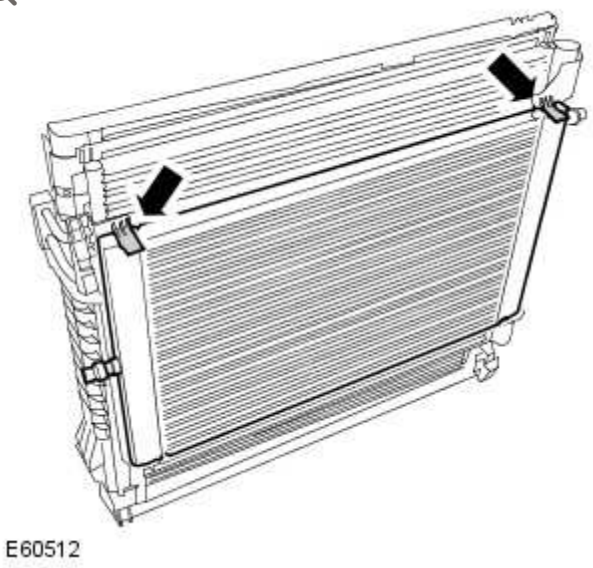

Remove the supercharger radiator.

- Release the 2 clips.

INSTALLATION

1. Install the supercharger radiator.
   - Secure with the clips.
2. Install the radiator assembly.
   For additional information, refer to: Radiator (303-03, Removal and Installation).
3. Connect the battery ground cable.
   For additional information, refer to: Specifications (414-00, Specifications).

SUPERCHARGER COOLING

RADIATOR (G1225029)

REMOVAL AND INSTALLATION

26.40.01	RADIATOR ASSEMBLY - RENEW	5000 CC, AJ V8, SUPERCHARGED	3.4	USED WITHINS	+

REMOVAL

NOTE:

Removal steps in this procedure may contain installation details.

1. Disconnect the battery ground cable.
   Refer to: Specifications (414-00 Battery and Charging System - General Information, Specifications).

2. **WARNING:**

   Make sure to support the vehicle with axle stands.

   Raise and support the vehicle.

3. Refer to: Cooling System Partial Draining and Vacuum Filling (303-03B, General Procedures).

4. Refer to: Condenser Fan - V8 5.0L Petrol/V8 S/C 5.0L Petrol (412-03A Air Conditioning, Removal and Installation).

5. 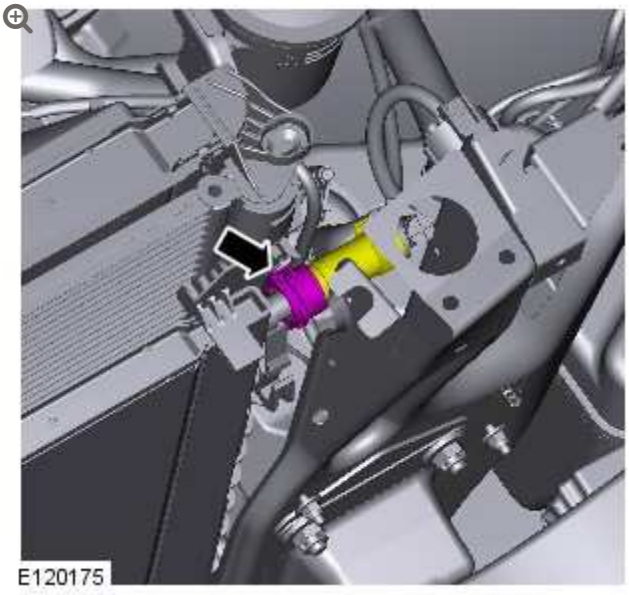

6. 

7.

CAUTION:

Always protect the cooling pack elements to prevent accidental damage.

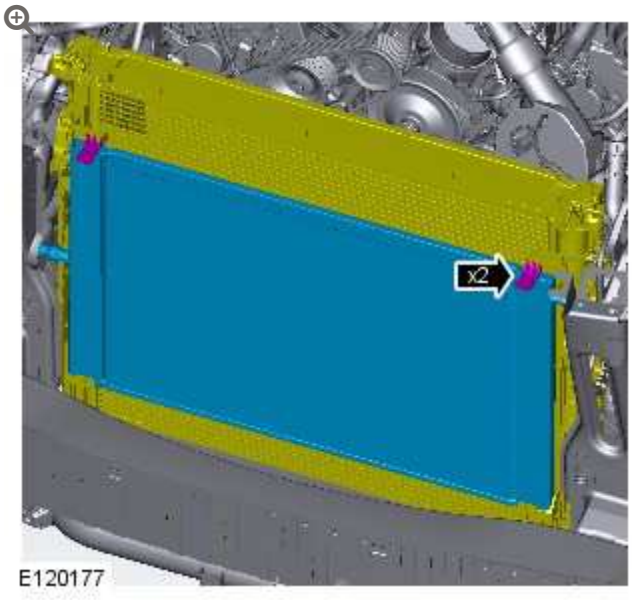

INSTALLATION

1. To install reverse the removal procedure.

SUPERCHARGER COOLING

COOLANT PUMP (G1225034)

REMOVAL AND INSTALLATION

26.50.01	PUMP - WATER - RENEW	5000 CC, AJ V8, SUPERCHARGED	1.5	USED WITHINS	+
26.50.26	AUXILIARY COOLANT PUMP - RENEW	5000 CC, AJ V8, SUPERCHARGED	0.4	USED WITHINS	+

REMOVAL

WARNING:

Since injury such as scalding could be caused by escaping steam or coolant, make sure the vehicle cooling system is cool prior to carrying out this procedure.

CAUTION:

Engine coolant will damage the paint finished surfaces. If spilt, immediately remove the coolant and clean the area with water.

NOTES:

- Some variation in the illustrations may occur, but the essential information is always correct.
- This procedure covers the removal and installation of the supercharger auxiliary coolant pump.

1. Refer to: Air Cleaner LH (303-12C, Removal and Installation).

2.

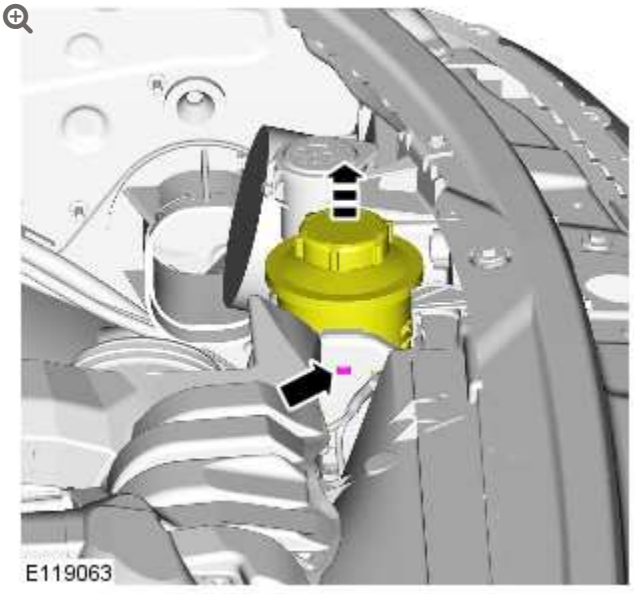

3.

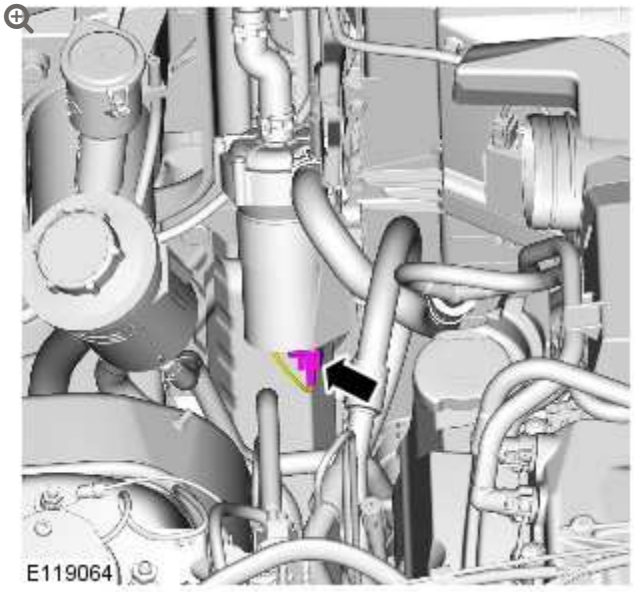

4.

WARNING:

Fluid loss is unavoidable, use absorbent cloth or a container to collect the fluid.

CAUTION:

Make sure that all openings are sealed. Use new blanking caps.

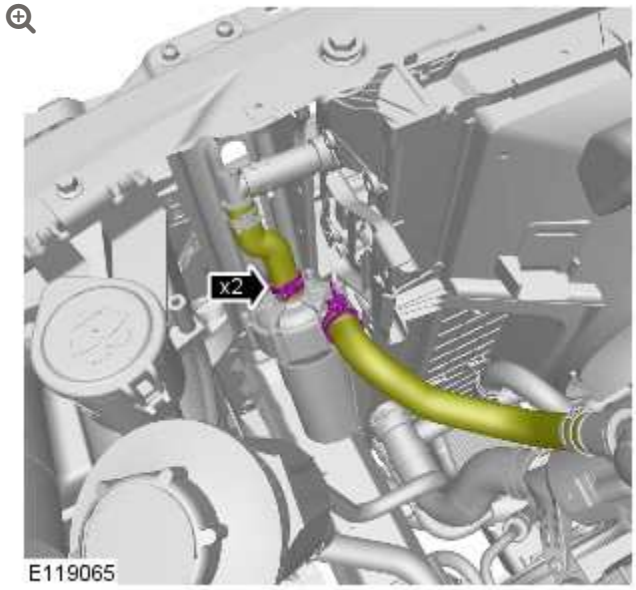

Clamp the hoses to minimize coolant loss.

5.

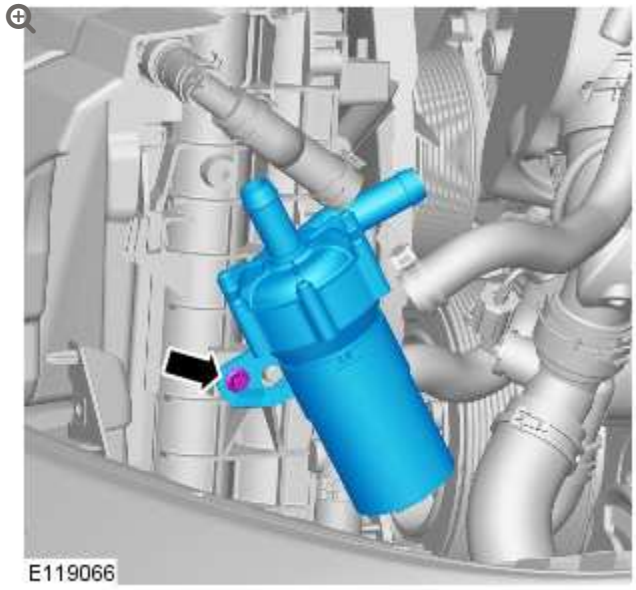

INSTALLATION

1.

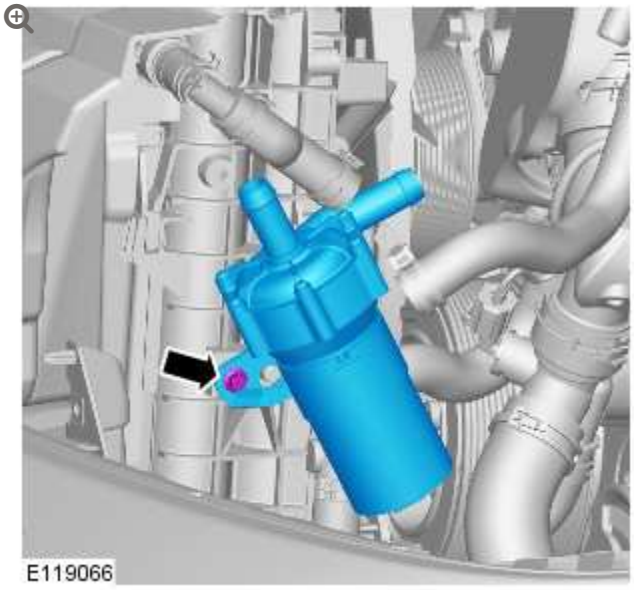

Torque: **6 Nm**

2.

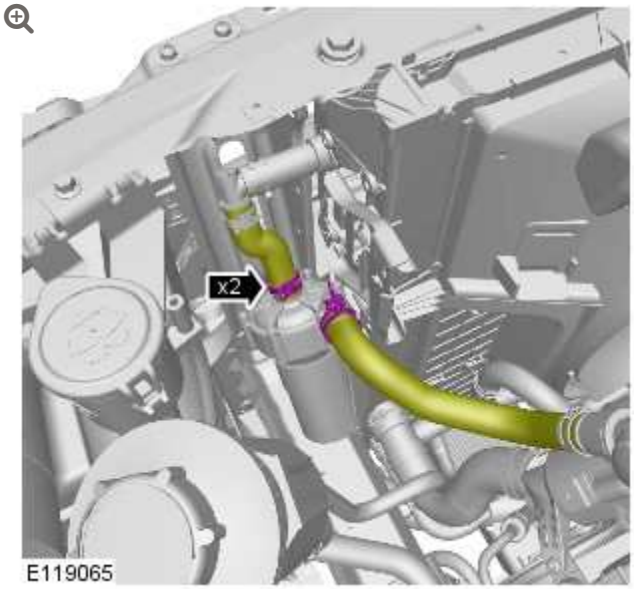

3.

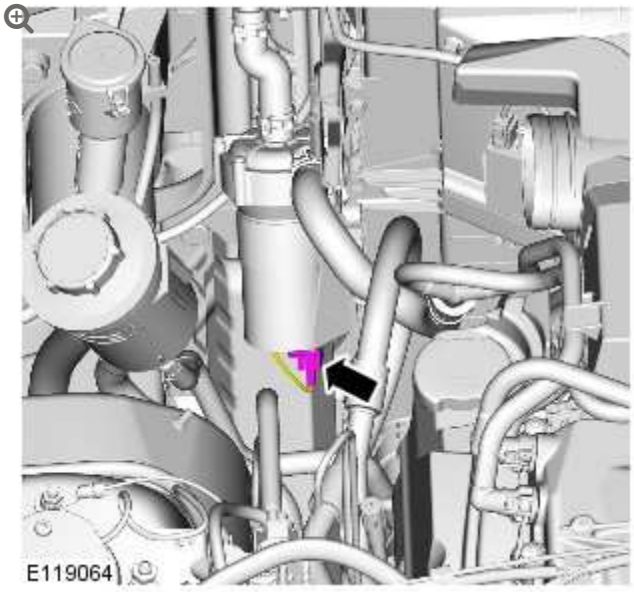

4.

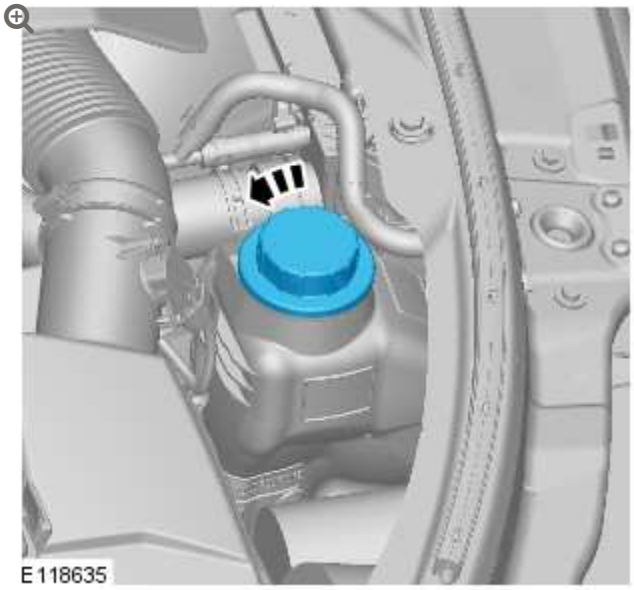

5.

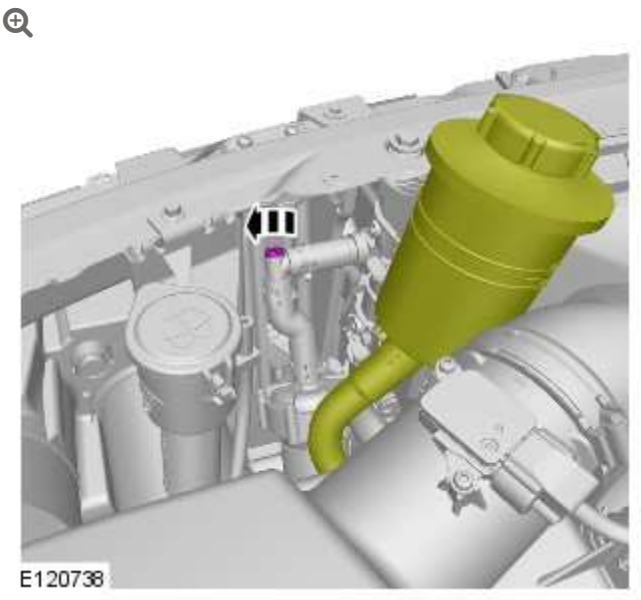

When coolant runs from the bleed point bubble-free, tighten the bleed screw.

6. Install the power steering fluid reservoir.

7. Refer to: Air Cleaner LH (303-12C, Removal and Installation).

8. Check and top-up the coolant.

9. **CAUTION:**

   Damage to the charge air cooler coolant pump will occur if the pump is allowed to cavitate.

   NOTE:

   With the ignition on the charge air coolant pump will run, to aid coolant bleed. Make sure the charge air coolant pump is primed prior to running the pump.

Start the engine and allow to run for 30 seconds, stop the engine.

10. Check and top-up the coolant.

SUPERCHARGER COOLING

DIAGNOSIS AND TESTING

PRINCIPLE OF OPERATION

For a detailed description of the engine cooling system and operation, refer to the relevant Description and Operation section of the workshop manual. REFER to: Supercharger Cooling (303-03B Supercharger Cooling, Description and Operation).

INSPECTION AND VERIFICATION

CAUTION:

Diagnosis by substitution from a donor vehicle is **NOT** acceptable. Substitution of control modules does not guarantee confirmation of a fault and may also cause additional faults in the vehicle being checked and/or the donor vehicle.

NOTE:

Check and rectify basic faults before beginning diagnostic routines involving pinpoint tests.

1. Verify the customer concern.

2. Visually inspect for obvious signs of mechanical or electrical damage.

Visual Inspection

MECHANICAL	ELECTRICAL
▪ Coolant leaks ▪ Coolant Hoses ▪ Coolant expansion tank ▪ Radiator ▪ Heater core ▪ Accessory drive belt ▪ Viscous fan	▪ Fuses ▪ Harnesses ▪ Loose or corroded connector(s) ▪ Engine Coolant Temperature (ECT) sensor

3. If an obvious cause for an observed or reported concern is found, correct the cause (if possible) before proceeding to the next step.

4. If the cause is not visually evident, verify the symptom and refer to the Symptom Chart, alternatively check for Diagnostic Trouble Codes (DTCs) and refer to the DTC Index.

SYMPTOM CHART

SYMPTOM	POSSIBLE CAUSES	ACTION
Coolant loss	▪ Hoses ▪ Hose connections ▪ Radiator ▪ Water pump ▪ Heater core ▪ Gaskets	Carry out a visual inspection. If there are no obvious leaks, carry out a cooling system pressure test. Rectify any leaks as necessary.

SYMPTOM	POSSIBLE CAUSES	ACTION
	▪ Engine casting cracks ▪ Engine block core plugs	
Overheating	▪ Low/Contaminated coolant ▪ Thermostat ▪ Viscous fan ▪ ECT sensor ▪ Restricted air flow over the radiator	Check the coolant level and condition. Carry out a cooling system pressure test. Rectify any leaks as necessary. Check the thermostat and rectify as necessary. Check the viscous fan operation, make sure the viscous fan rotates freely. Check for obstructions to the air flow over the radiator. Rectify as necessary.
Engine not reaching normal temperature	▪ Thermostat ▪ Viscous fan ▪ Thermostat ▪ Electric fan ▪ Fan speed module	Check the thermostat operation. Check the viscous fan operation, make sure the viscous fan is not seized. Rectify as necessary.

DTC INDEX

For a list of Diagnostic Trouble Codes (DTCs) that could be logged on this vehicle, please refer to Section 100-00. REFER to: Diagnostic Trouble Code (DTC) Index - V8 5.0L Petrol/V8 S/C 5.0L Petrol (100-00 General Information, Description and Operation).

SUPERCHARGER COOLING SYSTEM DRAINING, FILLING AND BLEEDING

(G455370)

GENERAL PROCEDURES

19.46.01	COOLING SYSTEM - SUPERCHARGER - PARTIAL DRAIN AND REFILL	AJ V8, SUPERCHARGED	0.4	USED WITHINS

NOTE:

Cooling system partial drain and refill is used on all supercharger cooling procedures.

1. Disconnect the battery ground cable.
   For additional information, refer to: Specifications (414-00, Specifications).

2. Remove the engine cover.
   For additional information, refer to: Engine Cover - 4.2L,

Vehicles With: Supercharger (501-05, Removal and Installation).

3. Connect the battery ground cable.
   For additional information, refer to: Specifications (414-00, Specifications).

4. **CAUTIONS:**

   - Engine coolant will damage the paint finished surfaces. If spilt, immediately remove the coolant and clean the area with water.
   - Damage to the charge air cooler coolant pump will occur if the pump is allowed to cavitate.

   NOTE:

   With the ignition key turned to position II the charge air coolant pump will run, to aid coolant bleed. Make sure the charge air coolant pump is primed prior to running the pump.

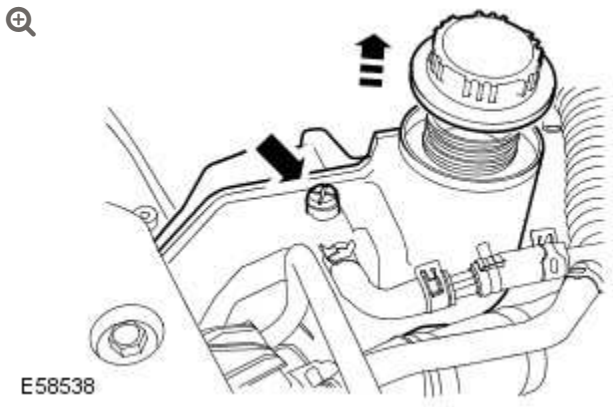

Top-up and bleed the supercharger cooling system.

- Remove the coolant expansion tank cap.
- Loosen the coolant expansion tank bleed screw.
- Turn the ignition key to position II.
- Add coolant to the expansion tank as required.

5. When a clear thread of coolant runs from the expansion tank, tighten the bleed screw.

6. Check and top-up the coolant.
   - Turn the ignition switch to the OFF position.
   - Install the coolant expansion tank cap.

7. Install the engine cover.
   For additional information, refer to: Engine Cover - 4.2L, Vehicles With: Supercharger (501-05, Removal and Installation).

2012.0 RANGE ROVER (LM), 303-03

SUPERCHARGER COOLING

DESCRIPTION AND OPERATION

COMPONENT LOCATION

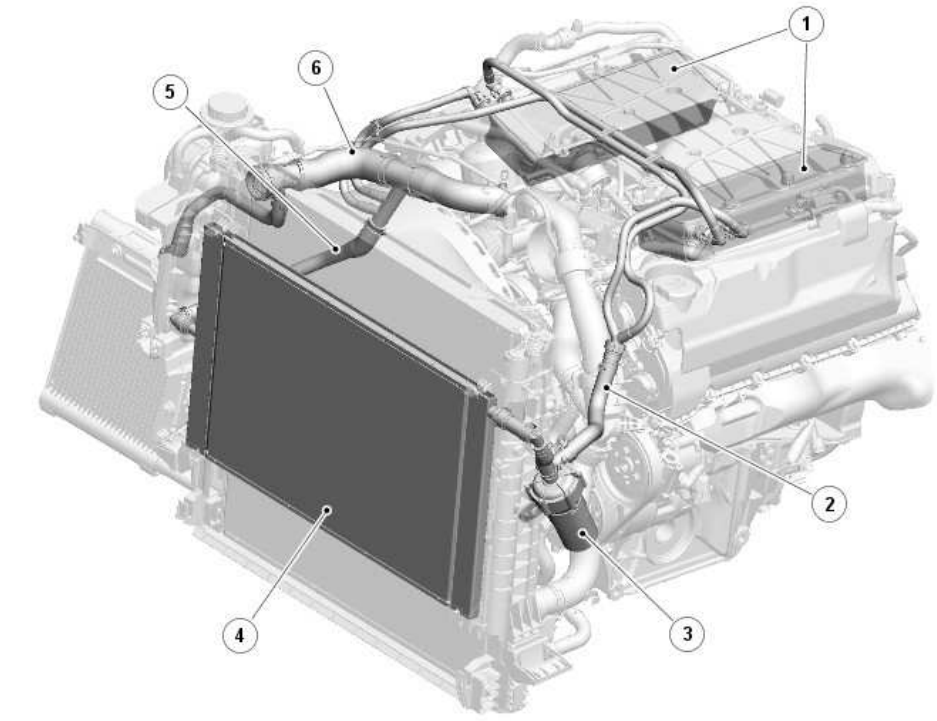

E120370

ITEM	DESCRIPTION
1	Charge air coolers
2	Supply hose to charge air coolers

ITEM	DESCRIPTION
3	Charge air coolant pump
4	Charge air radiator
5	Return hose from charge air coolers
6	Radiator upper hose

INTRODUCTION

The supercharger cooling system cools the pressurized charge air from the supercharger. The supercharger cooling system consists of:

- A charge air coolant pump.
- A charge air radiator.
- Two charge air coolers.
- Connecting hoses and pipes.

The supercharger cooling system is operationally independent of the engine cooling system, but connected to it at the radiator upper hose. The connection with the engine cooling system accommodates thermal expansion and retraction of the coolant in the supercharger cooling system, and enables filling and draining of the supercharger cooling system.

CHARGE AIR COOLANT PUMP

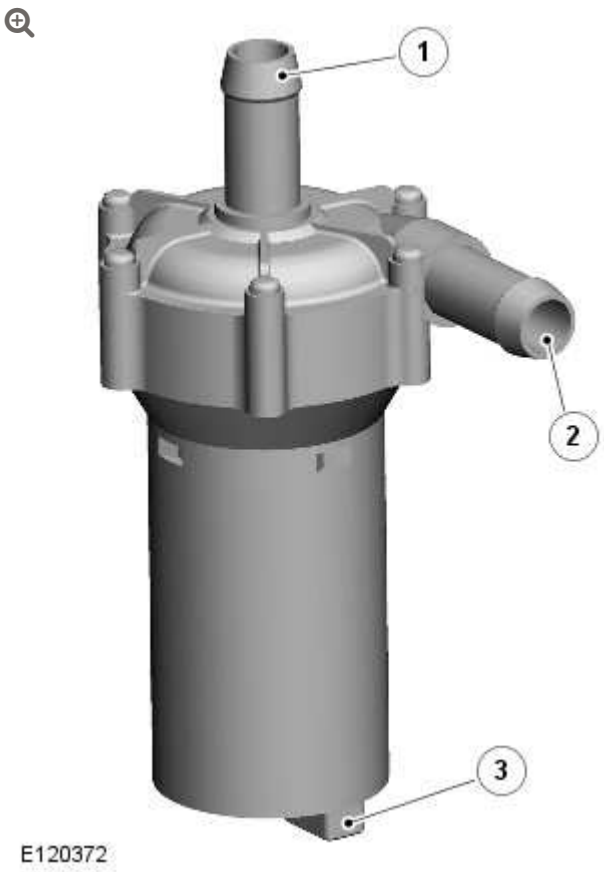

ITEM	DESCRIPTION
1	Coolant inlet connection
2	Coolant outlet connection
3	Electrical connector

The charge air coolant pump is an electric pump attached to the LH (left-hand) side of the radiator pack frame. Hoses connect the inlet of the charge air coolant pump to the charge air radiator, and the outlet to the charge air coolers. An electrical connector provides the interface between the motor of the charge air coolant pump and the vehicle wiring.

CHARGE AIR RADIATOR



E120371

ITEM	DESCRIPTION
1	Coolant outlet connection
2	Coolant inlet connection

The charge air radiator is installed in the radiator pack frame, immediately behind the condenser cooling fan.

The coolant inlet and outlet connections of the charge air radiator are installed in the RH (right-hand) and LH end tanks respectively. Hoses connect the inlet of the charge air radiator to the charge air coolers, and the outlet to the charge air coolant pump.

CHARGE AIR COOLERS

A charge air cooler is installed in each intake manifold.

For additional information, refer to: Intake Air Distribution and Filtering (303-12B Intake Air Distribution and Filtering - V8 S/C 5.0L Petrol, Description and Operation).

CONTROL DIAGRAM

NOTE:

A = Hardwired.

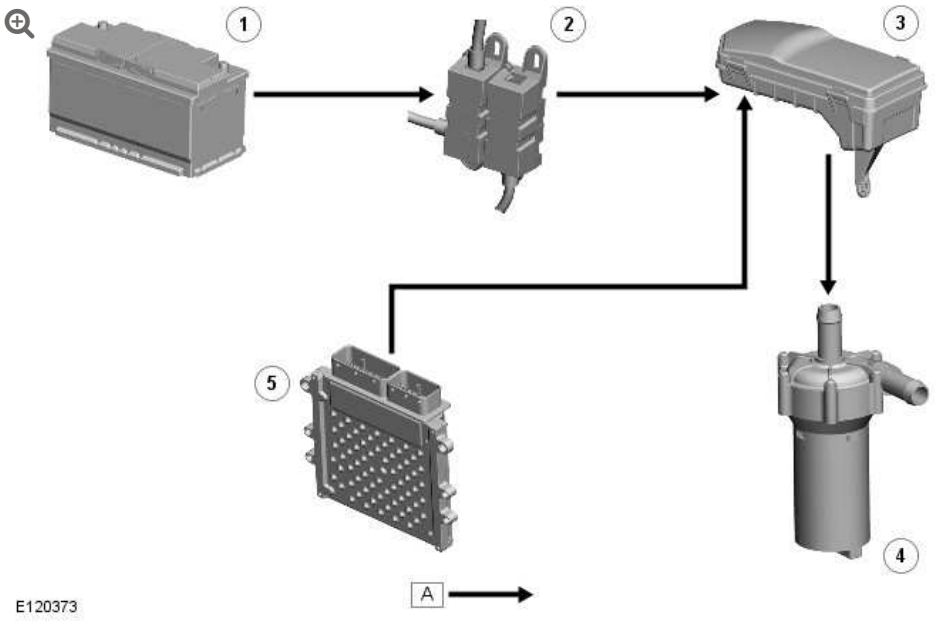

ITEM	DESCRIPTION
1	Battery
2	BJB (battery junction box) 2 (250 A megafuse)
3	EJB (engine junction box) (charge air coolant pump relay)
4	Charge air coolant pump
5	ECM (engine control module)

OPERATION

Supercharger Cooling Flow Diagram

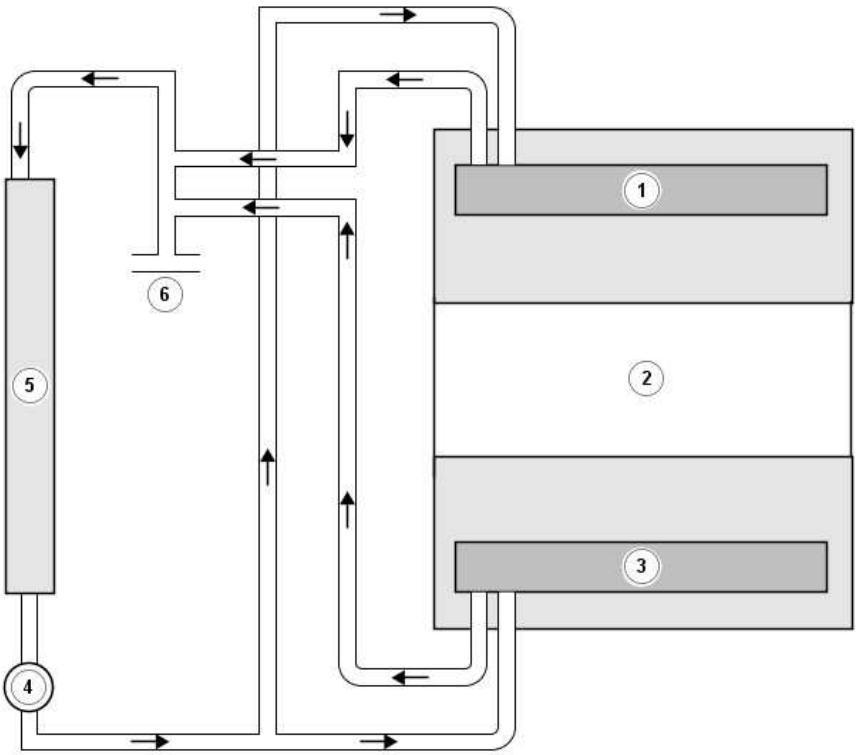

E120374

ITEM	DESCRIPTION
1	RH charge air cooler
2	Engine
3	LH (left hand) charge air cooler
4	Charge air coolant pump
5	Charge air radiator
6	Radiator upper hose

Electrical power for the charge air coolant pump is supplied from the charge air coolant pump relay in the EJB (engine junction box). When

the relay is energized, it connects power from the battery, via the BJB (battery junction box) 2 and EJB, to the charge air coolant pump. Operation of the relay is controlled by the ECM (engine control module). The charge air coolant pump relay is energized continuously while the ignition is in power mode 6.

When the charge air coolant pump is running, coolant flows from the pump outlet through the charge air coolers, the charge air radiator and back to the pump inlet.

FUEL CHARGING AND CONTROLS – V8 S/C 5.0L PETROL

SPECIFICATIONS

Torque Specifications

WARNINGS:

- Do not smoke or carry lighted tobacco or open flame of any type when working on or near any fuel related components. Highly flammable vapors are always present and may ignite. Failure to follow these instructions may result in personal injury.
- Before any work is carried out on the fuel system, ground the vehicle to earth and maintain the ground connection until the work is complete.

CAUTION:

Before disconnecting or removing components, make sure the area around the joint faces and connections are clean. Plug open connections to prevent contamination.

NOTE:

Tighten the fuel rail high pressure fuel pump fuel line unions and fuel rail crossover pipe unions as it is instructed in service manual.

DESCRIPTION	NM	LB-FT	LB-IN
Ignition coil-on-plugs retaining bolts	7	-	62
Spark plugs	20	15	-
Fuel rail retaining bolt	Stage 1 - 20 Stage 2 - 30	Stage 1 - 15 Stage 2 - 22	-
Fuel rail crossover pipe unions	21	15	-
Fuel rail crossover pipe retaining bolts	12	9	-
Fuel pressure regulator	33	24	-
Fuel rail high pressure fuel pump fuel line unions	21	15	-
Fuel rail high pressure fuel pump fuel line M8 bolt	25	18	-
Fuel rail high pressure fuel pump fuel line M6 bolt	11	8	-
Fuel rail high pressure fuel pump fuel line M5 nut	6	-	53
Fuel rail high pressure fuel pump fuel line shield M10 bolt	29	21	-
Fuel rail high-pressure fuel pump fuel line shield M6 bolt	11	8	-
Fuel rail high pressure fuel pump torx bolts	12	9	-
Throttle body retaining bolts	10	7	-
Accessory drive belt idler pulley retaining bolts	25	18	-

DESCRIPTION	NM	LB-FT	LB-IN
Halfshaft bearing retaining bolts	22	16	-
Right-hand engine mount to front subframe retaining bolts	56	41	-
Right-hand engine mount bracket to engine mount retaining nut	100	74	-

2012.0 RANGE ROVER (LM), 303-04

FUEL CHARGING AND CONTROLS – V8 S/C 5.0L PETROL

DESCRIPTION AND OPERATION

COMPONENT LOCATION

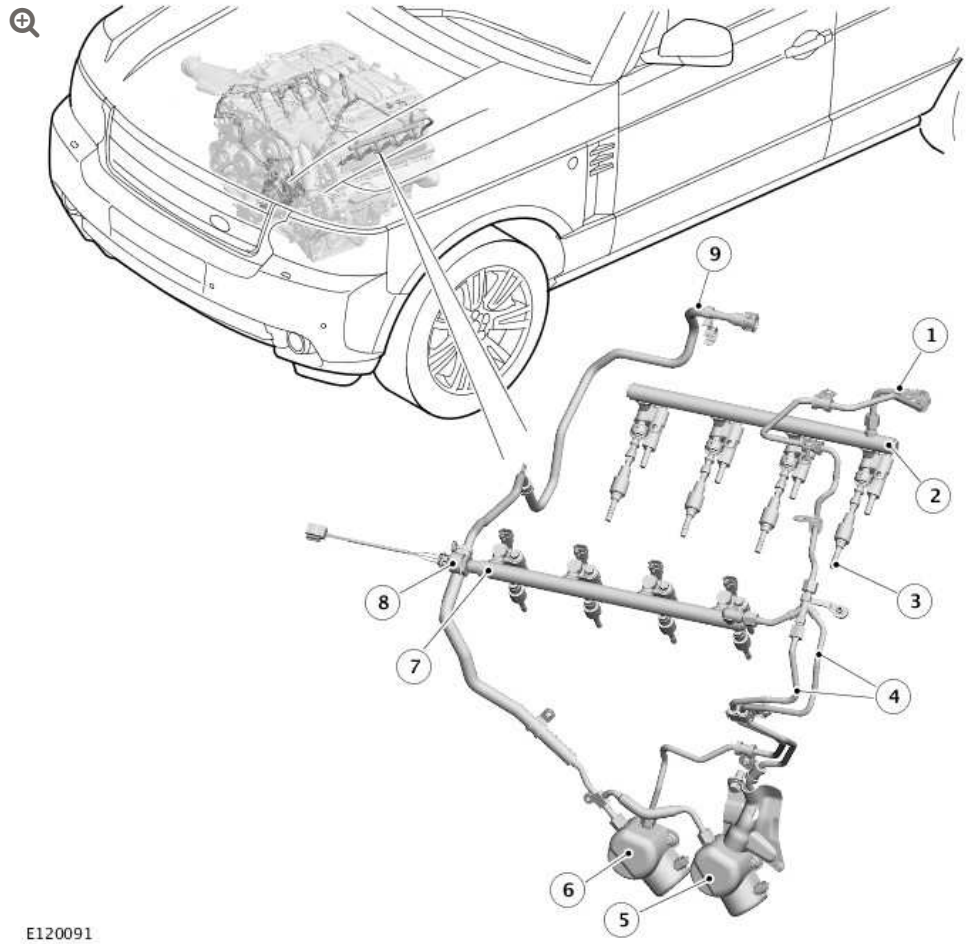

ITEM	DESCRIPTION
1	Crossover tube
2	LH (left hand) fuel rail
3	Fuel injector
4	HP (high pressure) fuel lines
5	HP fuel pump - No.1 (Front)
6	HP fuel pump - No.2 (Rear)
7	RH (right hand) fuel rail
8	FRP (fuel rail pressure) sensor
9	LP (low pressure) fuel lines

INTRODUCTION

The fuel charging and controls system is a gasoline DI (direct injection) system controlled by the ECM (engine control module).

The fuel charging and controls system consists of:

- LP and HP fuel lines.
- Two HP fuel pumps.
- Two fuel rails and a crossover tube.
- A FRP (fuel rail pressure) sensor.
- Eight fuel injectors.

LP fuel from the pump in the fuel tank is pressurized by the HP fuel pumps and supplied to the fuel injectors via the fuel rails and crossover tube. The ECM controls the fuel injectors and HP fuel pumps to inject the required volume of fuel into the combustion chambers.

LOW AND HIGH PRESSURE FUEL LINES

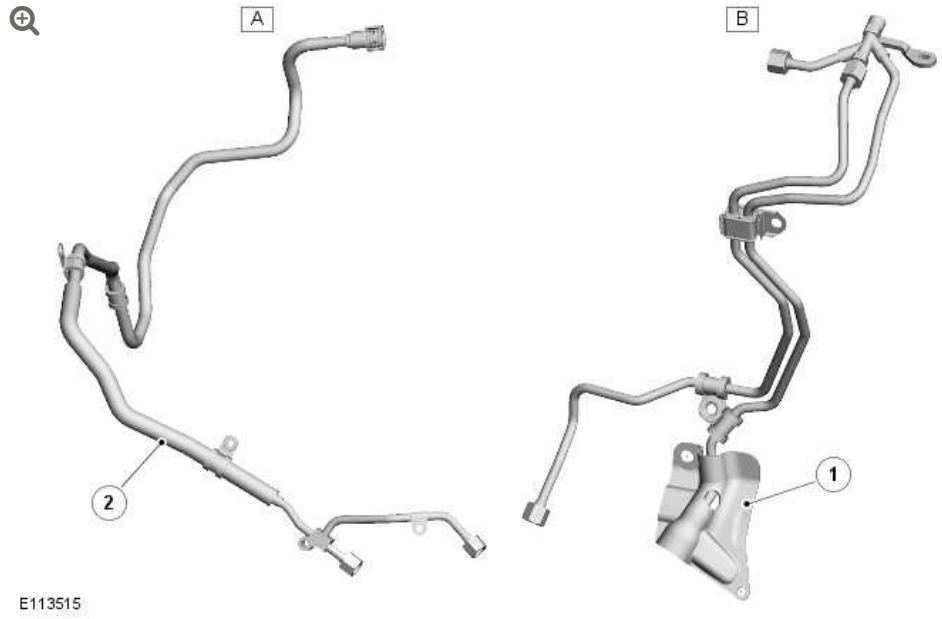

ITEM	DESCRIPTION
A	LP fuel lines
B	HP fuel lines
1	Acoustic cover
2	Heat reflective and insulation sleeves

The LP fuel line connects the HP fuel pumps to the fuel delivery line from the fuel tank and lines system. A quick release connector at the start of the LP fuel line is held in a clip integrated into the LH (left-hand) ignition coils cover. P-clips secure the LP fuel line to the rear of each cylinder head and to the RH (right-hand) side of the cylinder block. A heat reflective and insulation sleeves are installed on the LP fuel line where it runs behind the RH exhaust manifold.

The HP fuel lines connect the HP fuel pumps to the RH fuel rail and the crossover tube. Two P-clips and a pipe clamp attach the HP fuel lines to the cylinder block and the RH cylinder head respectively. An integral bracket on the front HP fuel line is attached to a stud on the

front-upper RH timing cover. An acoustic cover is installed on the bottom of the front HP fuel line.

HIGH PRESSURE FUEL PUMPS

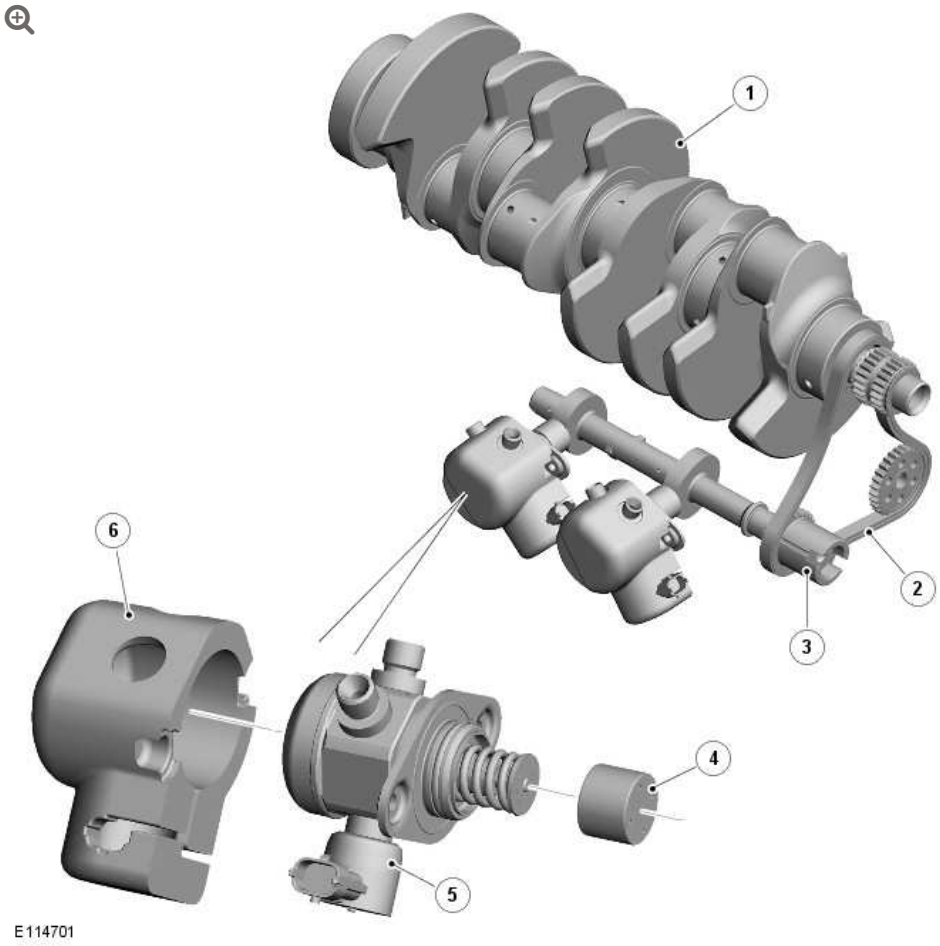

ITEM	DESCRIPTION
1	Crankshaft
2	Auxiliary drive chain
3	Auxiliary camshaft
4	Tappet
5	HP fuel pump - No.2
6	Acoustic cover

The two HP fuel pumps are identical mechanically-driven pumps installed on the RH side of the sump body, behind the generator. An O-ring seals each of the HP fuel pumps in the sump body. The front HP fuel pump is identified as No. 1 pump; the rear HP fuel pump is identified as No. 2 pump. An acoustic cover is installed on each of the HP fuel pumps.

The HP fuel pumps are single-plunger pumps. The plunger of each pump extends through the sump body and the carrier of the auxiliary camshaft. A tappet on the end each plunger is operated by a two-lobe cam on the auxiliary camshaft. A spring installed on the outside of the plunger ensures the plunger and tappet remain in contact with the cam.

The auxiliary camshaft is driven by the crankshaft, via the auxiliary drive chain, at engine speed. The auxiliary camshaft is timed to match the pump delivery strokes with crankshaft position.

HP Fuel Pump Schematic

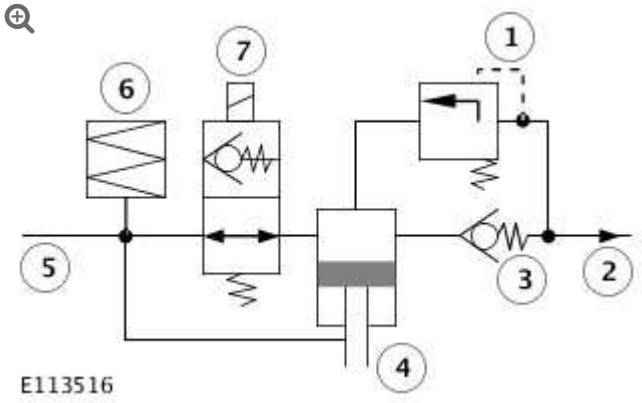

ITEM	DESCRIPTION
1	PRV (pressure relief valve)
2	To HP fuel lines
3	Check valve
4	Plunger

ITEM	DESCRIPTION
5	From LP fuel lines
6	Damper chamber
7	Fuel metering valve

In addition to the plunger, each HP fuel pump contains:

- A damper chamber.
- A fuel metering valve.
- A check valve.
- A PRV.

The damper absorbs pressure pulses from the plunger when the fuel metering valve is open at the start of the delivery stroke.

The fuel metering valve regulates the output pressure from the HP fuel pump. The fuel metering valve is a normally open solenoid valve controlled by the ECM. During the inlet stroke of the plunger the fuel metering valve is de-energized, which allows LP fuel into the pumping chamber. The ECM energizes the fuel metering valve closed during the delivery stroke of the plunger, which forces the fuel in the pumping chamber through the check valve into the HP lines. By changing the closing point of the fuel metering valve, the ECM can determine the volume of fuel output during the delivery stroke, and thus the pressure in the HP side of the system.

The check valve prevents the return of HP fuel to the pumping chamber during the inlet stroke of the plunger.

The PRV protects the HP side of the system from excessive pressure if there is a failure of the fuel metering valve. If the pump delivery pressure increases to 195 - 204 bar (2828 - 2959 lbf/in^2), the PRV opens and returns fuel to the inlet side of the plunger.

FUEL RAILS AND CROSSOVER TUBE

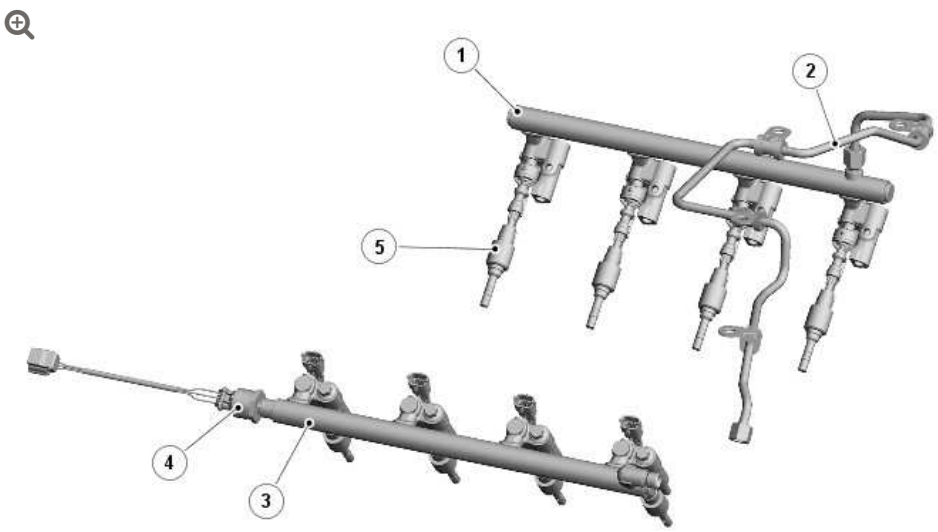

E113517

ITEM	DESCRIPTION
1	LH fuel rail
2	Crossover tube
3	RH fuel rail
4	FRP sensor
5	Fuel injector

The fuel rails and crossover tube are made from stainless steel. Bolts attach each fuel rail to the related cylinder head. The crossover tube connects the front high pressure line to the LH fuel rail, which ensures there is equal pressure in the two fuel rails. Four P-clips attach the crossover tube to the intercooler-tank top.

The rear of the RH fuel rail incorporates a threaded boss for installation of the FRP sensor.

FUEL RAIL PRESSURE SENSOR

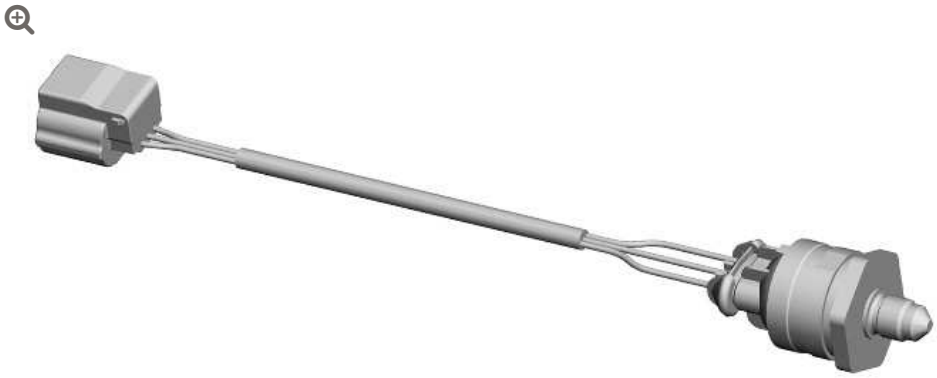

The FRP sensor provides the ECM with a continuous signal of fuel rail pressure. The FRP sensor is installed in the rear of the RH fuel rail. The FRP sensor is screwed into a threaded boss in the fuel rail. A flying lead and three pin connector provides the interface with the engine harness.

The FRP sensor contains a steel diaphragm fitted with strain gages, which are incorporated into a Wheatstone bridge. The output from the Wheatstone bridge is processed by the ECM to derive a pressure value.

FUEL INJECTORS

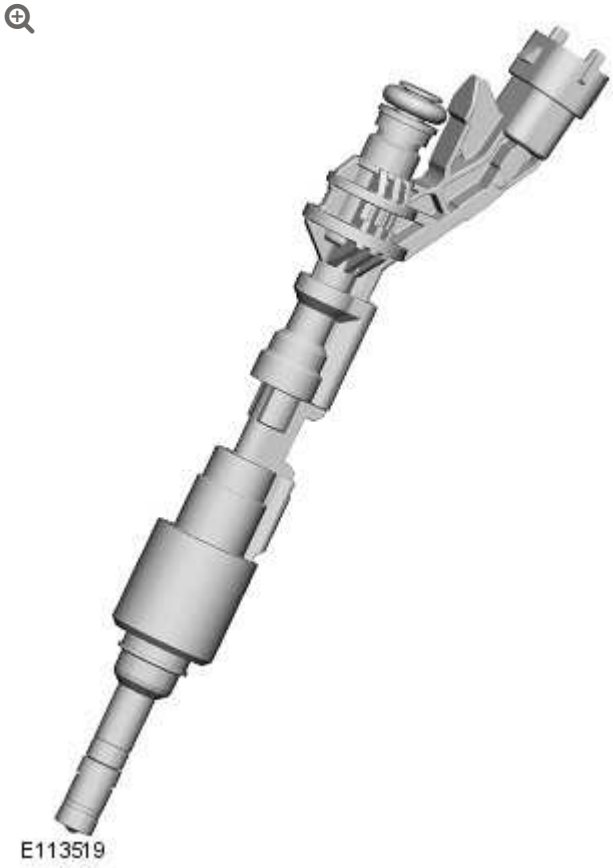

The fuel injectors spray fuel from the fuel rail directly into the combustion chambers. The fuel injectors are installed close to the center of the combustion chambers, between the inlet and exhaust valves and next to the spark plug.

The fuel injectors are a push fit in the fuel rails and the cylinder heads. On each fuel injector, a rubber O-ring seals the head of the fuel injector in the fuel rail. A teflon ring seals the nozzle of the fuel injector in the cylinder head. A clamp locks each fuel injector to the fuel rail.

Each fuel injector contains a solenoid-operated needle valve, which opens when the solenoid winding is energized. While the needle valve is open, fuel is sprayed into the combustion chamber. The solenoid winding is connected to a power feed and a ground from the ECM, which operates the fuel injectors with a two stage power

supply. Initially the ECM supplies the fuel injectors with 65 V, then once the boost current reaches 11 A the power supply is switched to battery voltage. The ECM meters the amount of fuel injected into the combustion chambers by adjusting the time that the solenoid winding is energized.

There are six holes around the tip of the nozzle through which the fuel is sprayed. Two of the holes direct fuel below the spark plug. The other four holes direct fuel evenly around the remainder of the combustion chamber.

If a fuel injector fails, the engine will suffer from unstable idle speed, poor NVH (noise, vibration and harshness) and poor emissions performance.

CONTROL DIAGRAM

NOTE:

A = Hardwired

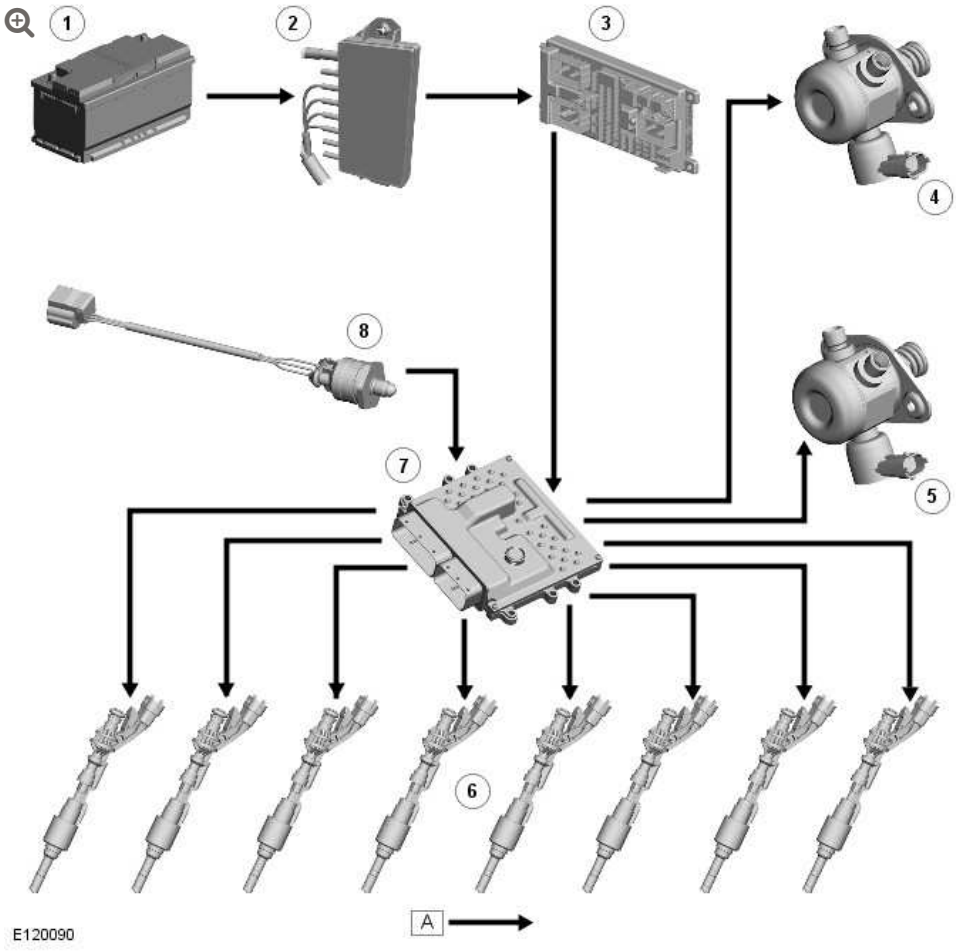

ITEM	DESCRIPTION
1	Battery
2	BJB (battery junction box) (50 A megafuse)
3	CJB (central junction box) (ignition relay)
4	No. 1 HP fuel pump
5	No. 2 HP fuel pump
6	Fuel injectors
7	ECM
8	FRP sensor

PRINCIPLES OF OPERATION

The ECM controls the output from the HP fuel pumps to deliver the required volume of fuel at pressures up to 150 bar (2175 lbf/in^2).

The ECM uses the signal from the FRP sensor to calculate the time the fuel injectors need to be energized to deliver the correct mass of fuel to the combustion chambers.

FUEL INJECTION COMPONENT CLEANING

(G1202495)

GENERAL PROCEDURES

19.50.02	FUEL SYSTEM – DEPRESSURISE	5000 CC, AJ V8	0.1	USED WITHINS
19.50.02	FUEL SYSTEM – DEPRESSURISE	AJ V8, SUPERCHARGED	0.3	USED WITHINS
19.50.22	FUEL INJECTION COMPONENT CLEANING USING A VACUUM GUN	5000 CC, AJ V8	0.1	USED WITHINS

GENERAL EQUIPMENT

EQUIPMENT NAME
Pneumatic vacuum gun

CLEANING

WARNINGS:

- Do not carry out any repairs to the fuel system with the engine running. Failure to follow this instruction may result in personal injury.
- Do not smoke or carry lighted tobacco or open flame of any type when working on or near any fuel related components. Highly flammable vapors are always present and may ignite. Failure to follow these instructions may result in personal injury.
- If fuel contacts the eyes, flush the eyes with cold water or eyewash solution and seek immediate medical attention.
- Place the vehicle in a well ventilated, quarantined area and arrange ' No Smoking/Petrol Fumes' signs about the vehicle.
- Wash hands thoroughly after fuel handling, as prolonged contact may cause irritation. Should irritation develop, seek medical attention.
- Do not carry or operate cellular phones when working on or near any fuel related components. Highly flammable vapors are always present and may ignite. Failure to follow these instructions may result in personal injury.

CAUTIONS:

- Before using the cleaning fluid, protect all electrical components and connectors with lint-free non-flocking material.
- Make sure that all parts removed from the vehicle are placed on the lint-free non-flocking material.
- Make sure that any protective clothing worn is clean and made from lint-free non-flocking material.
- Make sure that clean non-plated tools are used. Clean tools using a new brush that will not lose its bristles, prior to starting work on the vehicle.
- Use a steel topped workbench and cover it with clean, lint-free non-flocking material.
- Make sure the workshop area in which the vehicle is being worked on is as clean and as dust free as possible. Foreign matter from work on clutches, brakes or from machining or welding operations can contaminate the fuel system and may result in later malfunction.

1. Using a new brush that will not lose its bristles, brush the components being removed and the surrounding area.

2. Using a pneumatic vacuum gun, remove all traces of foreign material.
   General Equipment: Pneumatic vacuum gun

FUEL CHARGING AND CONTROLS – V8 S/C 5.0L PETROL

FUEL INJECTORS (G1225236)

REMOVAL AND INSTALLATION

19.60.12	INJECTORS – SET – RENEW	5000 CC, AJ V8, SUPERCHARGED	5	USED WITHINS	+
19.60.12	INJECTORS – SET – RENEW	AJ V8, SUPERCHARGED	5.1	USED WITHINS	+

REMOVAL

1. Refer to: Fuel Rail LH (303-04, Removal and Installation).

INSTALLATION

1. Refer to: Fuel Rail LH (303-04, Removal and Installation).

FUEL CHARGING AND CONTROLS – V8 S/C 5.0L PETROL

FUEL RAIL LH (G1224858)

REMOVAL AND INSTALLATION

19.60.03	FUEL RAIL – LH BANK – RENEW	5000 CC, AJ V8, SUPERCHARGED	1.4	USED WITHINS	+

SPECIAL TOOL(S)



303–1450

Spark Plug Remover/Installer



310-197

Remover, Fuel Injector



310-198

Installer, Teflon Seal

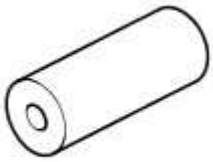

310-199

Re-shape Tool, Teflon Seal

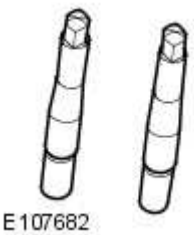

310-200-01

Fuel Rail Installation Guide Pins - Threaded

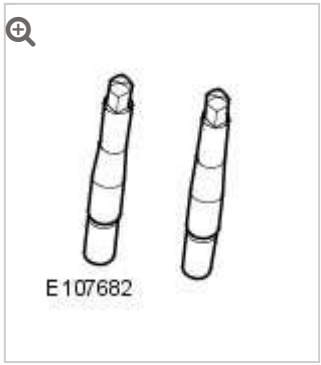

310-200-02

Fuel Rail Installation Guide Pins - Unthreaded

REMOVAL

CAUTIONS:

- Make sure that tools and equipment are clean and free of foreign material and lubricant.
- Always carry out the cleaning process before carrying out any repairs to the fuel injection system components. Failure to follow this instruction may result in foreign matter ingress to the fuel injection system.

NOTES:

- Removal steps in this procedure may contain installation details.
- Some variation in the illustrations may occur, but the essential information is always correct.

1.

Refer to: Petrol and Petrol-Ethanol Fuel Systems Health and Safety Precautions (100-00 General Information, Description and Operation).

2. Refer to: Fuel System Pressure Release - V8 5.0L Petrol/V8 S/C 5.0L Petrol (310-00 Fuel System - General Information, General Procedures).

3. Disconnect the battery ground cable.
Refer to: Specifications (414-00 Battery and Charging System - General Information, Specifications).

4. Refer to: Fuel Injection Component Cleaning (303-04A Fuel Charging and Controls - V8 5.0L Petrol, General Procedures).

5. Refer to: Air Cleaner Outlet Pipe T-Connector (303-12B Intake Air Distribution and Filtering - V8 S/C 5.0L Petrol, Removal and Installation).

6. **CAUTION:**

Be prepared to collect escaping fluids.

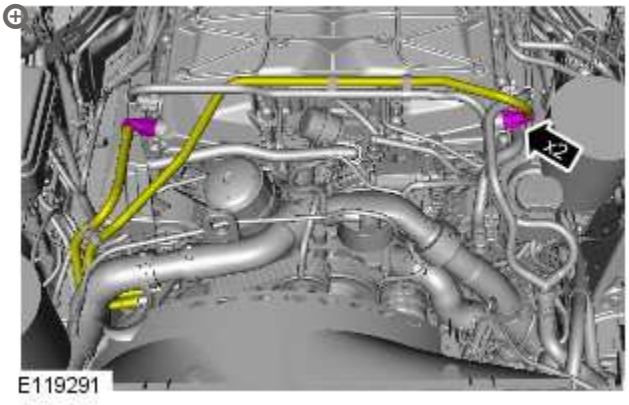

7.

CAUTION:

Be prepared to collect escaping fluids.

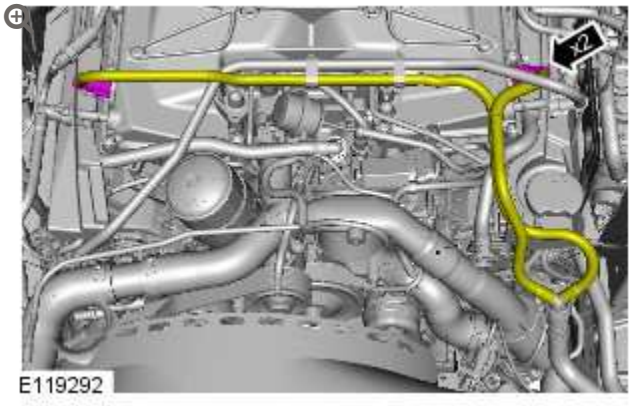

8.

CAUTION:

Be prepared to collect escaping fluids.

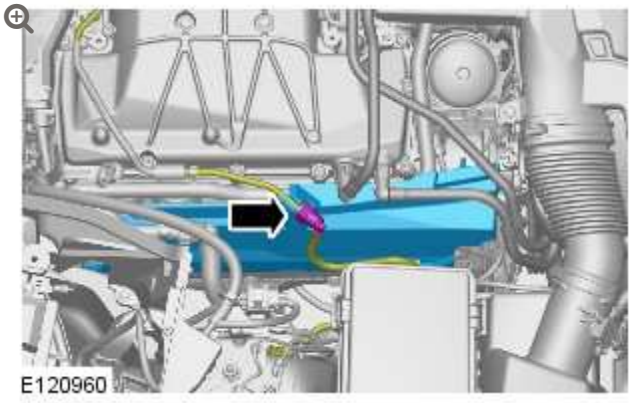

9.

CAUTION:

Be prepared to collect escaping fluids.

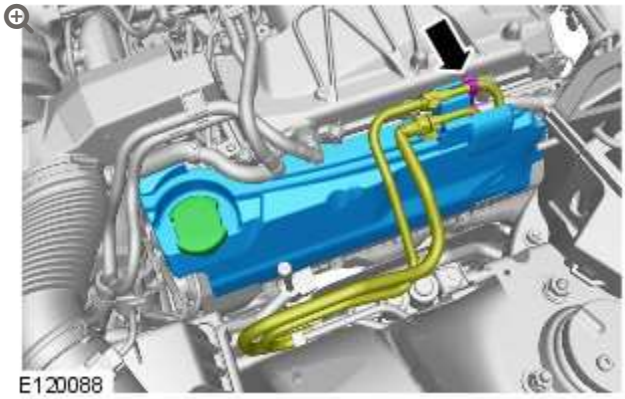

10.

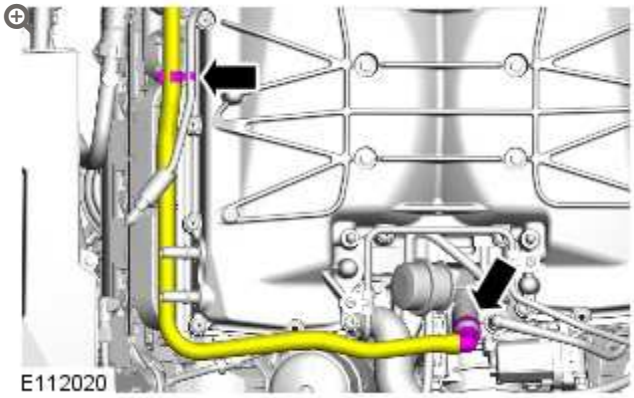

11.

CAUTIONS:

- Make sure that all openings are sealed. Use new blanking caps.
- Be prepared to collect escaping fluids.

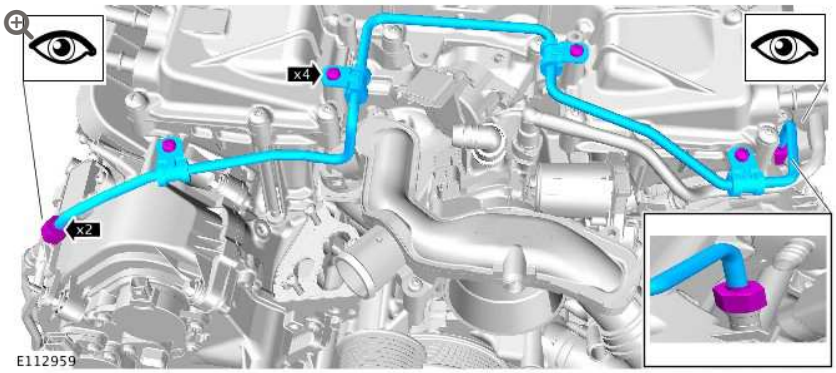

12.

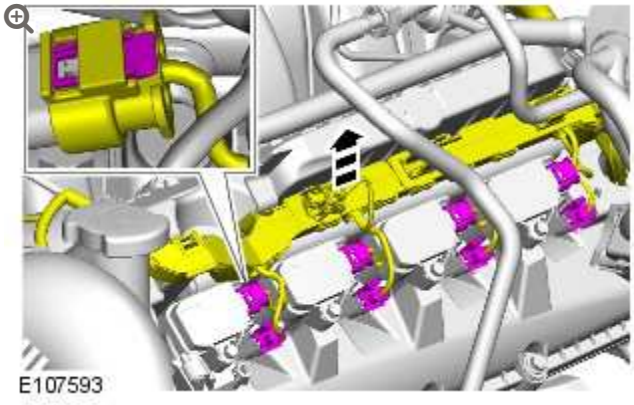

13.

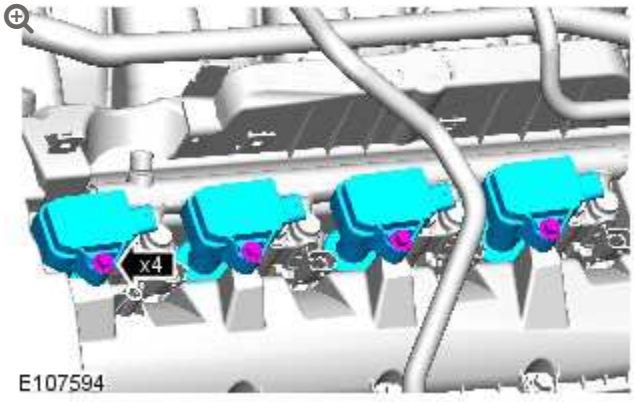

14.

NOTE:

RH illustration shown, LH is similar.



Special Tool(s): 303-1450

15.

CAUTION:

Make a note of the fuel injector clamp alignment to the fuel rail prior to removal.

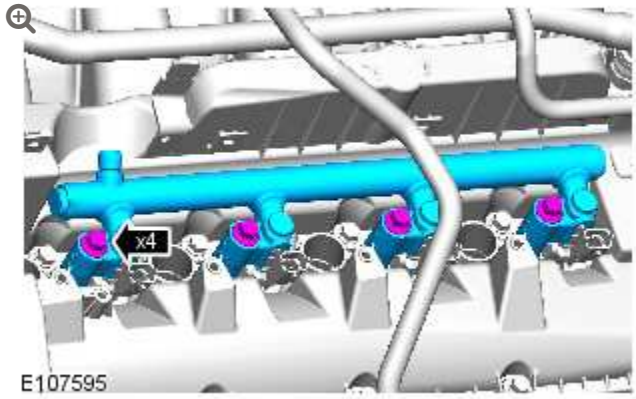

16.

CAUTIONS:

- Make sure that the special tool is located correctly to the fuel injector prior to removing the fuel injector.
- Make sure that the special tool is held square to the fuel injector during removal.
- Make sure that all open ports are covered to prevent any foreign material ingress.

NOTE:

RH illustration shown, LH is similar.

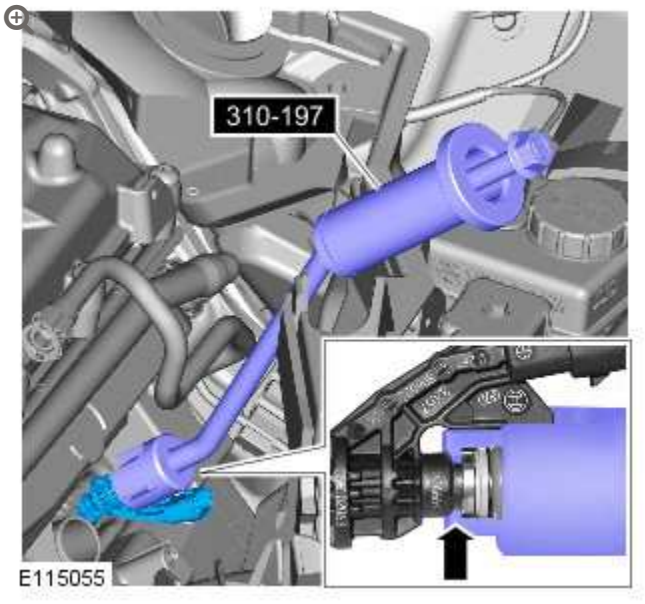

Special Tool(s): 310-197

17.

CAUTIONS:

- If new fuel injectors are installed, a new injector clamp must be installed.
- If the fuel injector is being removed without a new component being installed, the fuel injector clamp must remain with the fuel injector it is removed with.

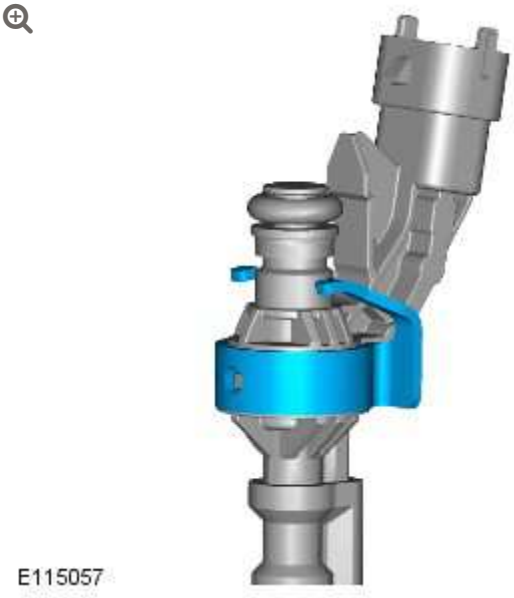

18.

CAUTIONS:

- Do not use a knife to remove the Teflon seal as damage could occur to the fuel injector.
- Do not cut the Teflon seal to deep as damage could occur to the fuel injector.
- Pinch the Teflon seal to allow the tool to cut the Teflon seal without damaging the fuel injector.

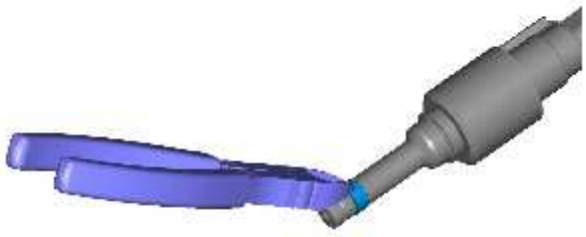

E115058

19.

CAUTION:

Do not use any sharp tools to remove the O-ring seal as damage could occur to the fuel injector.

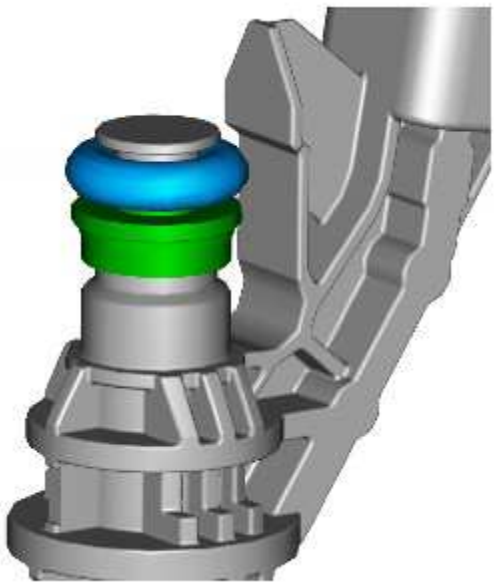

E115059

INSTALLATION

1.

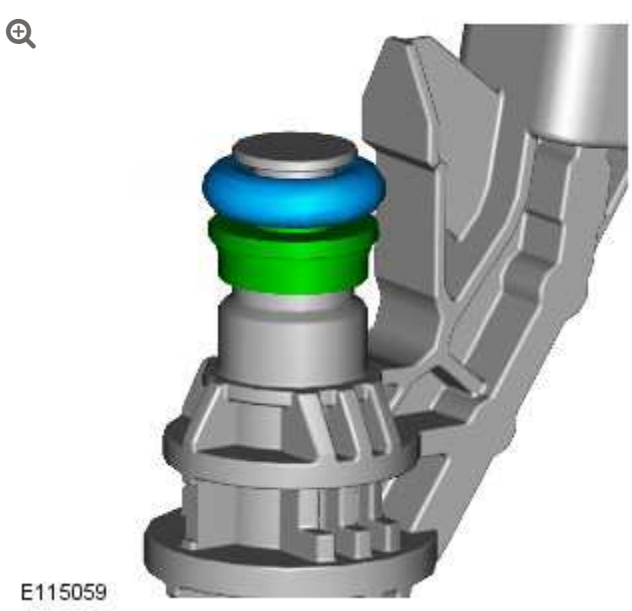

Install new O-ring seals.

2.

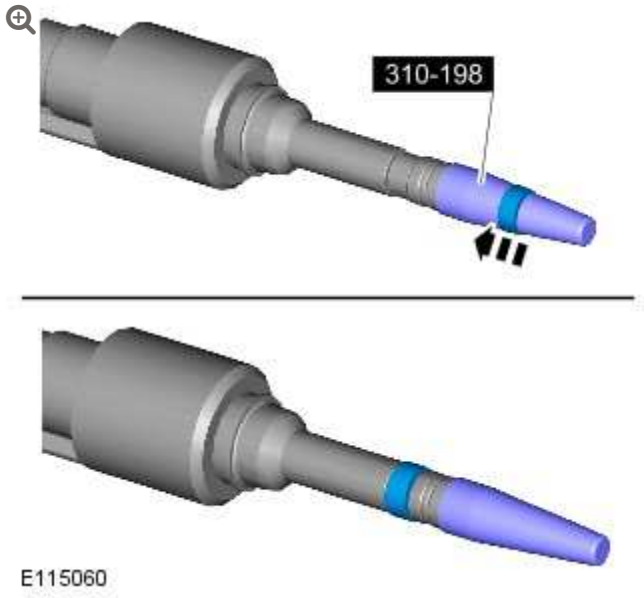

Install new Teflon seals.

Special Tool(s): 310-198

3.

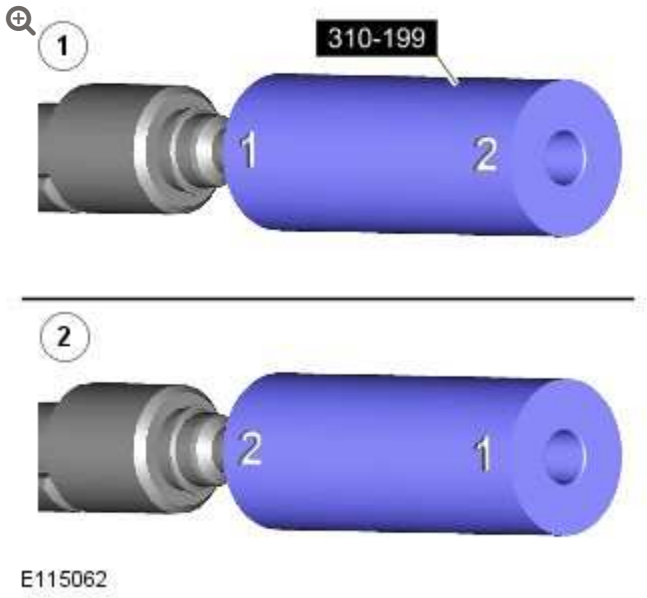

E115062

Special Tool(s): 310-199

4.

CAUTION:

If the original fuel injector is being installed, the original fuel injector clamp must installed with the fuel injector it was removed with.

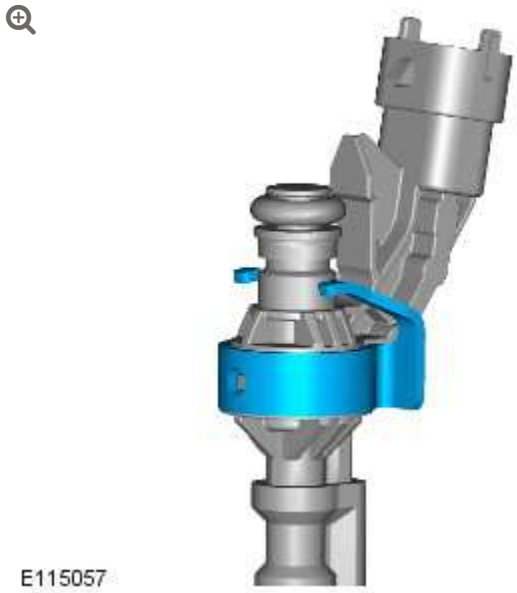
E115057

5.

CAUTION:

If a new cylinder head has been installed then the special tool 310-200-02 without the thread must be used to install the fuel rail.

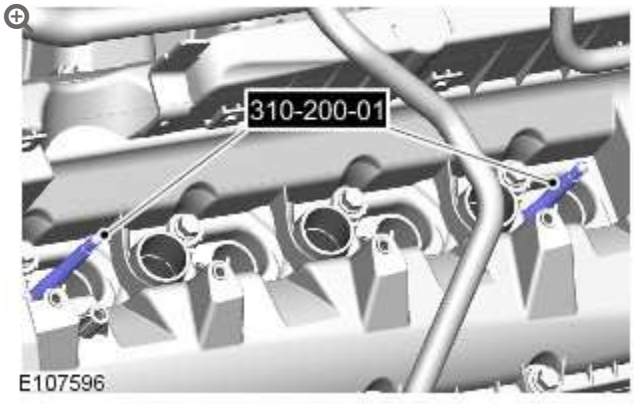

Special Tool(s): 310-200-01, 310-200-02

6.

CAUTIONS:

- Make sure that the area around the open fuel injector ports are clean and free of foreign material and lubricant prior to installing the fuel injector.
- When installing the fuel injector(s), make sure that the Teflon seal is clean and free of foreign material and lubricant.

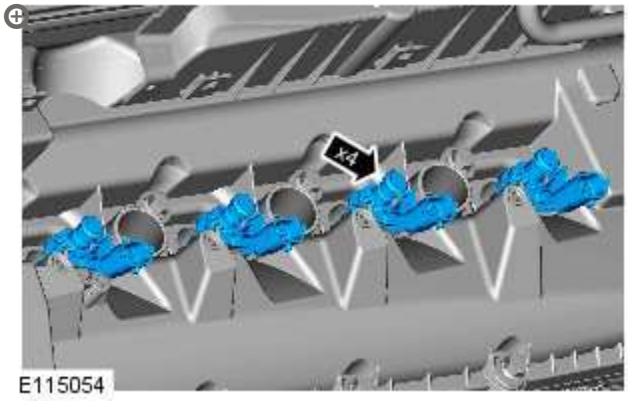

7.

CAUTIONS:

- If new fuel injectors are installed, a new injector clamp must be installed.
- Make sure that the fuel injector is aligned and installed into the fuel rail correctly, as noted in the removal step.
- Tighten the fuel rail retaining bolts a turn at a time until the correct torque is achieved.

NOTE:

Lubricate the fuel injector O-ring seals with clean engine oil.

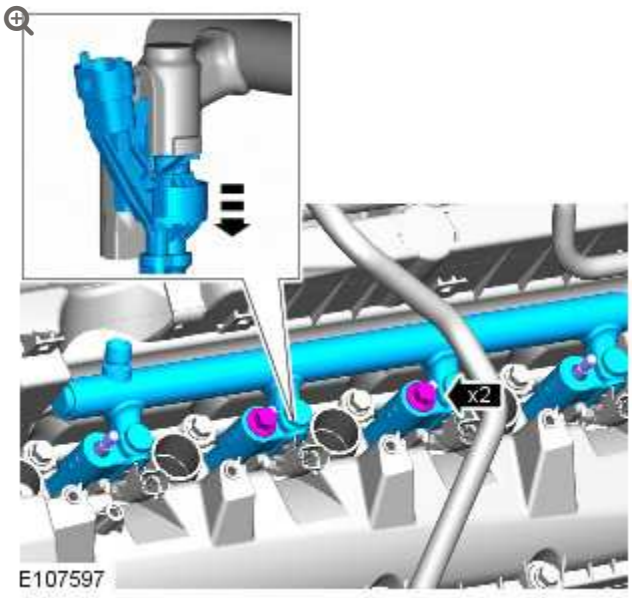

Torque: **20 Nm**

8.



Special Tool(s): 310-200-01, 310-200-02

9.

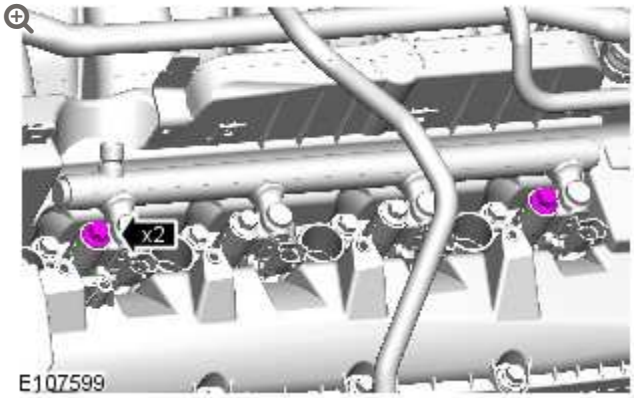

Torque: **20 Nm**

10. **NOTE:**

Tighten the bolts in the indicated sequence.

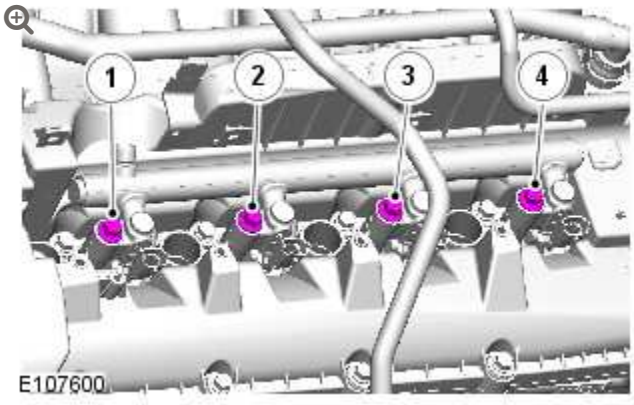

Torque:

Bolt 2 **30 Nm**

Bolt 3 **30 Nm**

Bolt 1 **30 Nm**

Bolt 4 **30 Nm**

11. **NOTE:**

RH illustration shown, LH is similar.

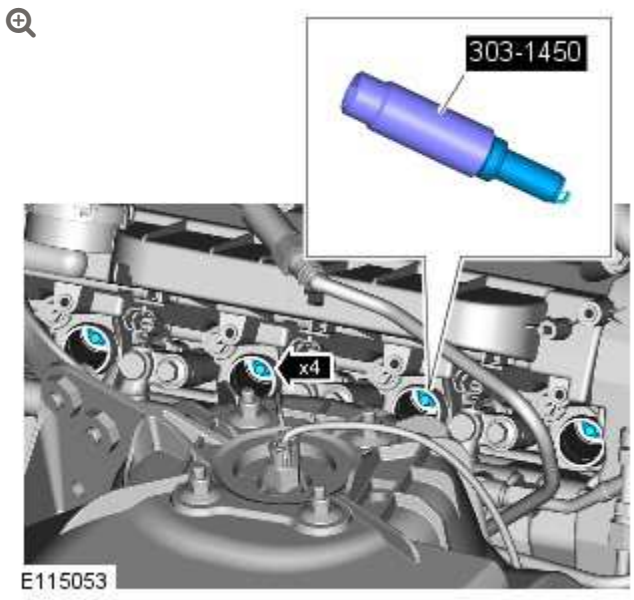

Special Tool(s): 303-1450

Torque: **20 Nm**

12.

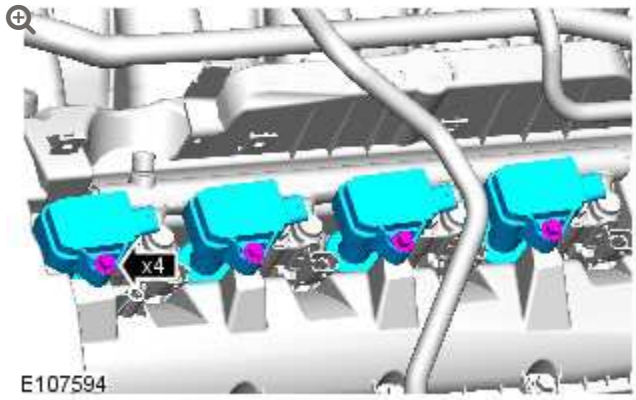

Torque: **7 Nm**

13.

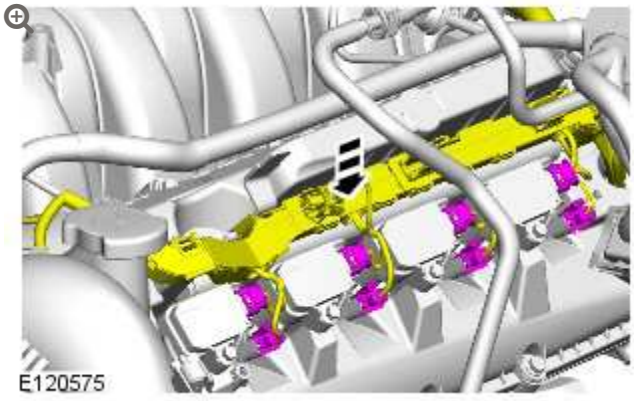

14.

CAUTION:

Lubricate only the union threads with clean engine oil.

NOTES:

- Do not tighten at this stage.
- Remove and discard the blanking caps.

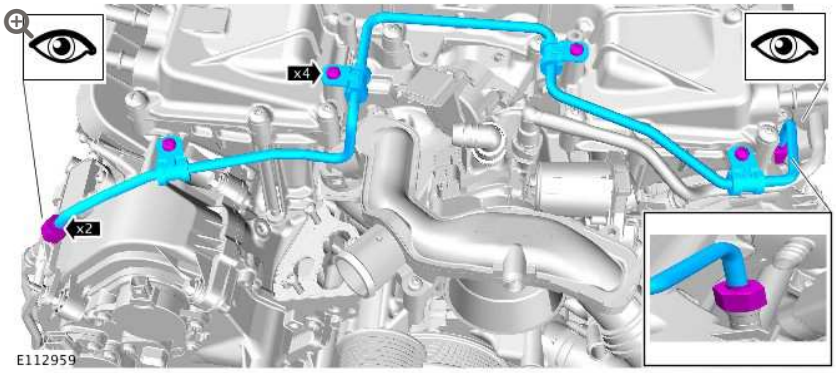

15.

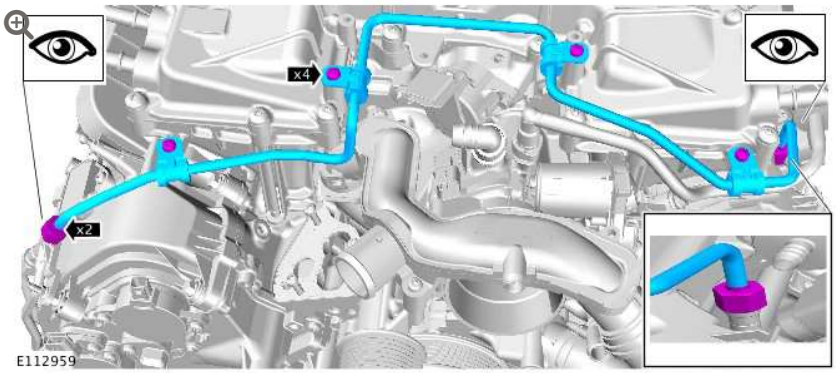

Torque:

Unions **21 Nm**

Bolts **8 Nm**

16.

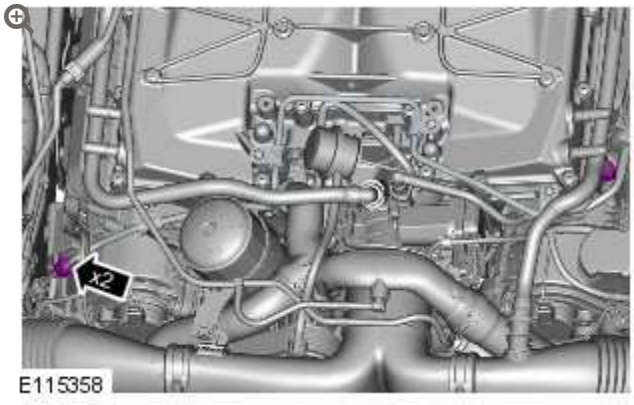

Torque: **21 Nm**

17.

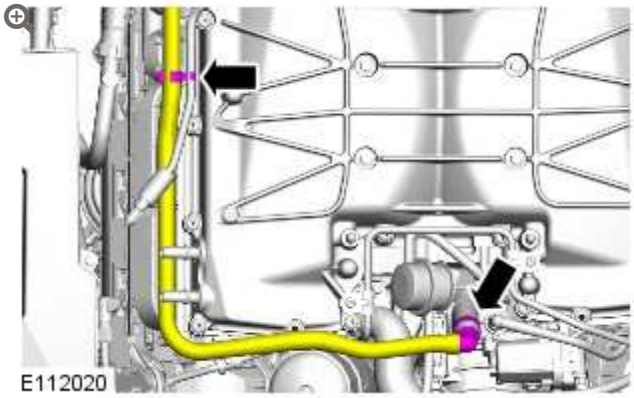

18.

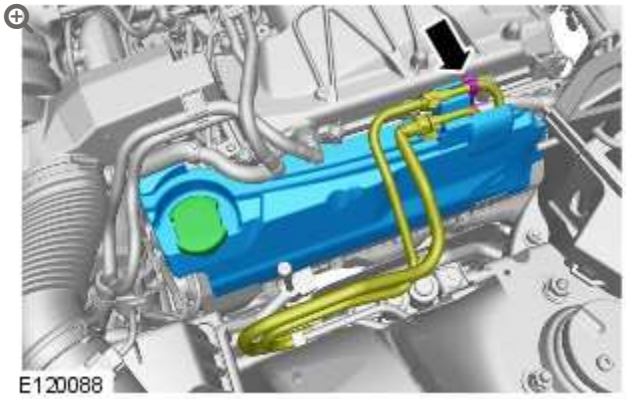

19.

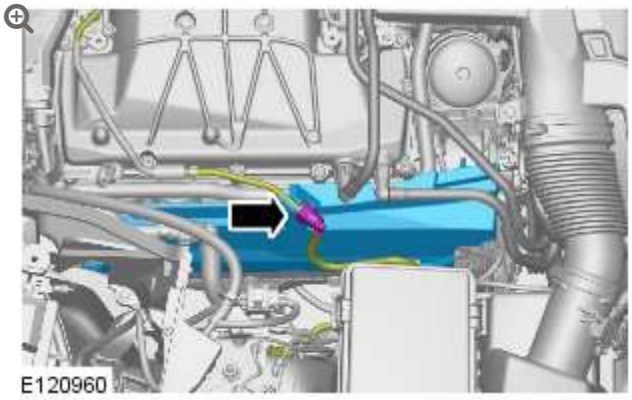

20.

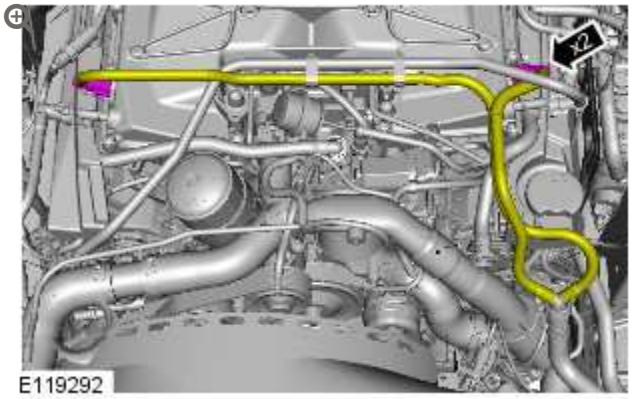

21.

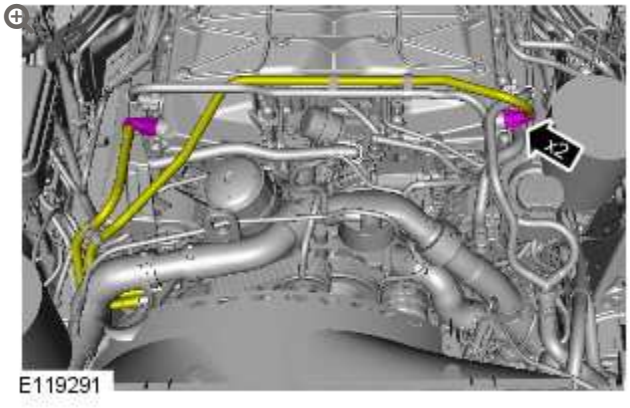

22. Refer to: Air Cleaner Outlet Pipe T-Connector (303-12B Intake Air Distribution and Filtering - V8 S/C 5.0L Petrol, Removal and Installation).

23. Refer to: Specifications (414-00 Battery and Charging System - General Information, Specifications).

FUEL CHARGING AND CONTROLS – V8 S/C 5.0L PETROL

FUEL RAIL RH (G1224859)

REMOVAL AND INSTALLATION

19.60.05	FUEL RAIL – RH BANK – RENEW	5000 CC, AJ V8, SUPERCHARGED	4	USED WITHINS	+

SPECIAL TOOL(S)



310–197

Remover, Fuel Injector



310-198

Installer, Teflon Seal



310-199

Re-shape Tool, Teflon Seal

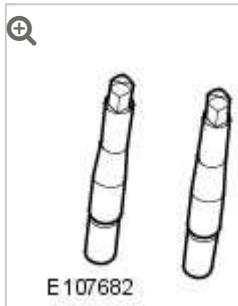

310-200-01

Fuel Rail Installation Guide Pins - Threaded

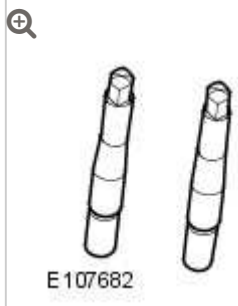

310-200-02

Fuel Rail Installation Guide Pins - Unthreaded

REMOVAL

CAUTIONS:

- Make sure that tools and equipment are clean and free of foreign material and lubricant.
- Always carry out the cleaning process before carrying out any repairs to the fuel injection system components. Failure to follow this instruction may result in foreign matter ingress to the fuel injection system.

NOTES:

- Removal steps in this procedure may contain installation details.
- Some variation in the illustrations may occur, but the essential information is always correct.

1. Refer to: Petrol and Petrol-Ethanol Fuel Systems Health and Safety Precautions (100-00 General Information, Description and Operation).

2. Refer to: Fuel System Pressure Release - V8 5.0L Petrol/V8 S/C 5.0L Petrol (310-00 Fuel System - General Information, General Procedures).

3. Disconnect the battery ground cable.
   Refer to: Specifications (414-00 Battery and Charging System - General Information, Specifications).

4. Refer to: Fuel Injection Component Cleaning (303-04A Fuel Charging and Controls - V8 5.0L Petrol, General Procedures).

5. Refer to: Air Cleaner Outlet Pipe T-Connector (303-12B Intake Air Distribution and Filtering - V8 S/C 5.0L Petrol, Removal and Installation).

6. 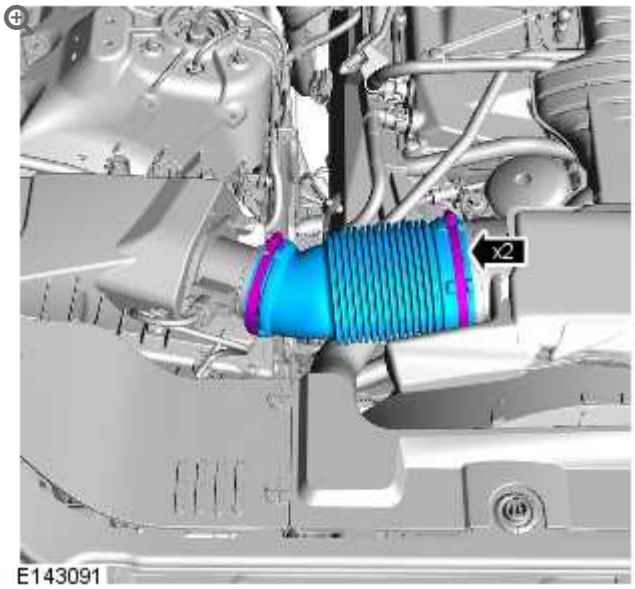

7. Refer to: Air Cleaner RH (303-12A Intake Air Distribution and Filtering - V8 5.0L Petrol, Removal and Installation).

8. **CAUTION:**

Be prepared to collect escaping coolant.

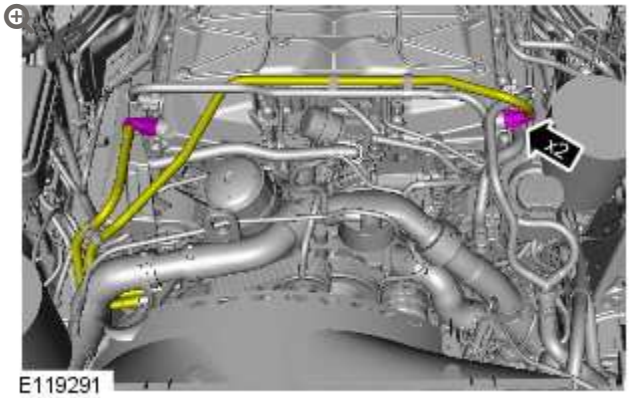

9.

CAUTION:

Be prepared to collect escaping coolant.

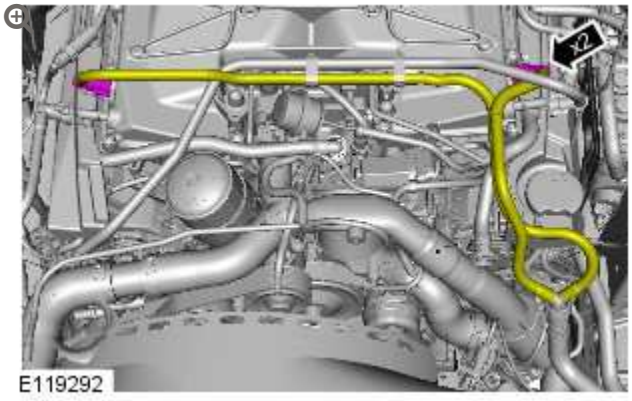

10.

CAUTION:

Be prepared to collect escaping fluids.

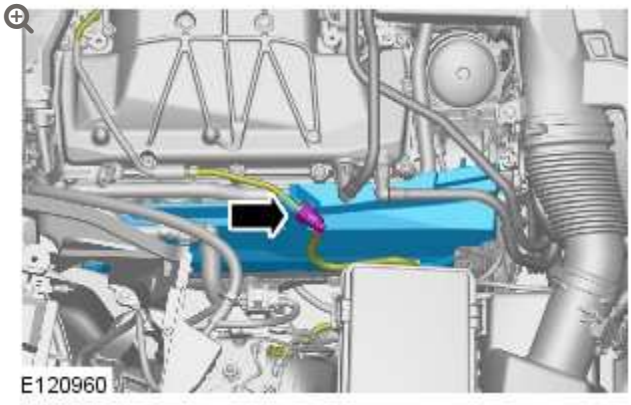

11.

CAUTION:

Be prepared to collect escaping fluids.

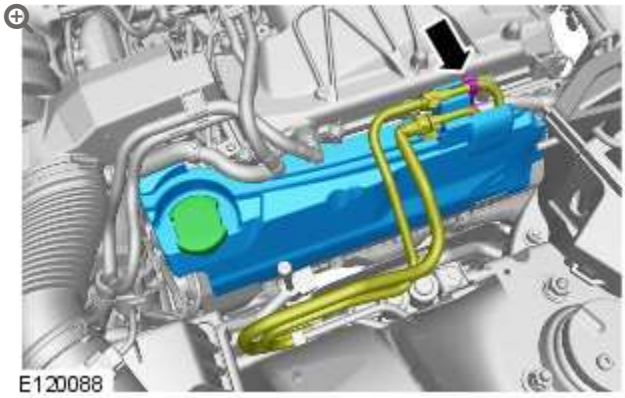

12.

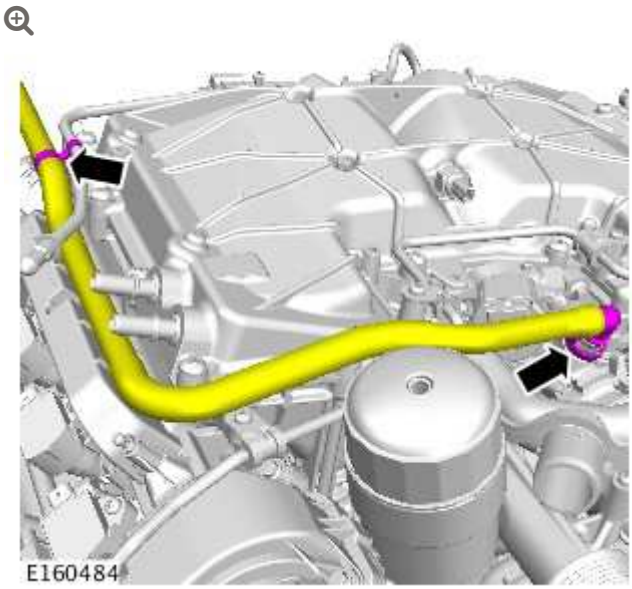

13.

CAUTIONS:

- Be prepared to collect escaping fluids.
- Make sure that all openings are sealed. Use new blanking caps.

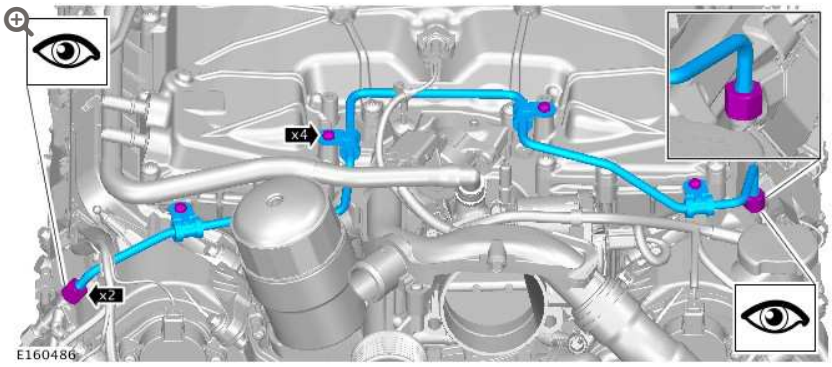

14.

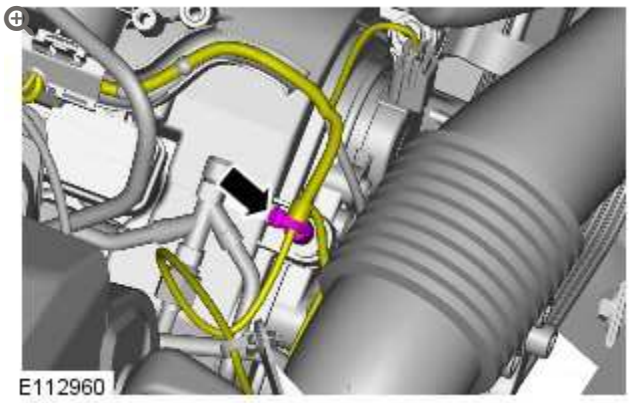

15.

CAUTIONS:

- Be prepared to collect escaping fluids.
- Make sure that all openings are sealed. Use new blanking caps.

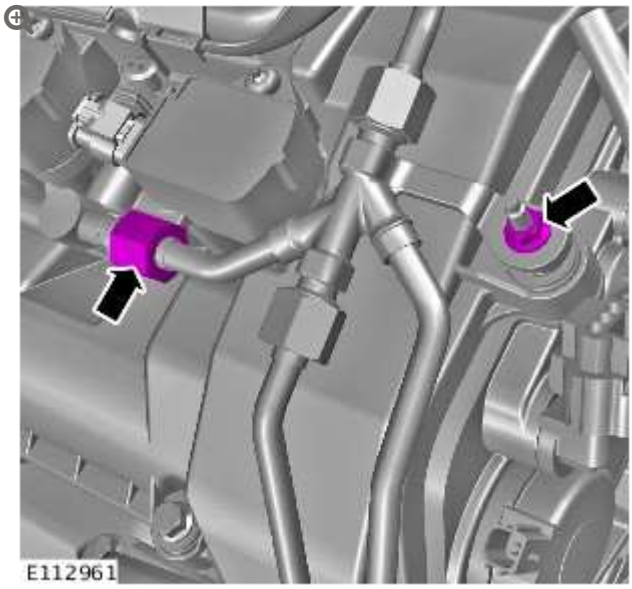

16.

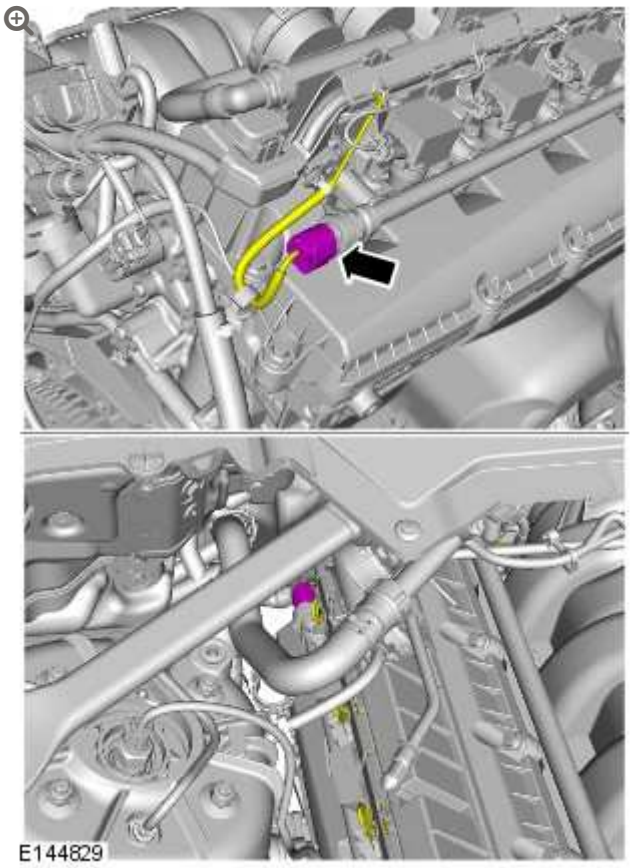

17.

NOTE:

If equipped.

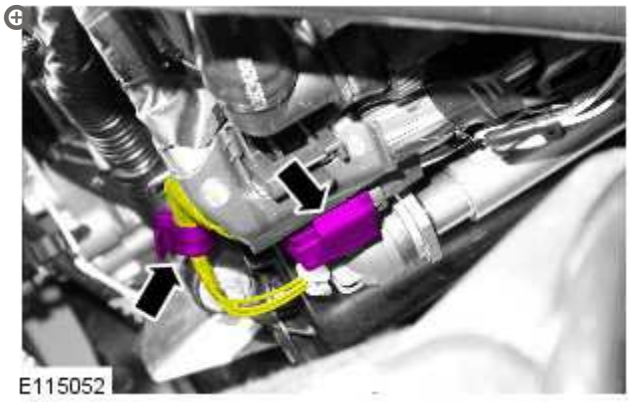

18.

NOTE:

LH illustration shown, RH is similar.

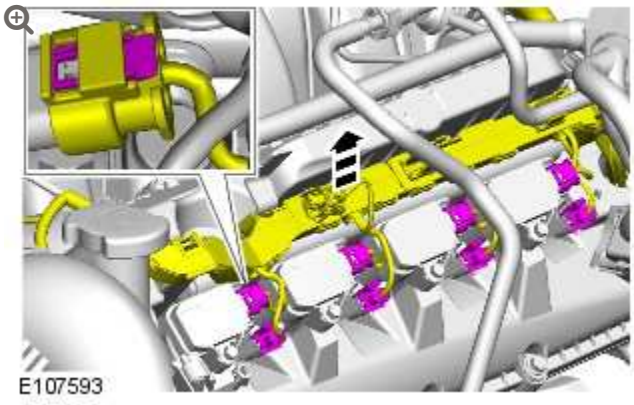

19.

NOTE:

LH illustration shown, RH is similar.

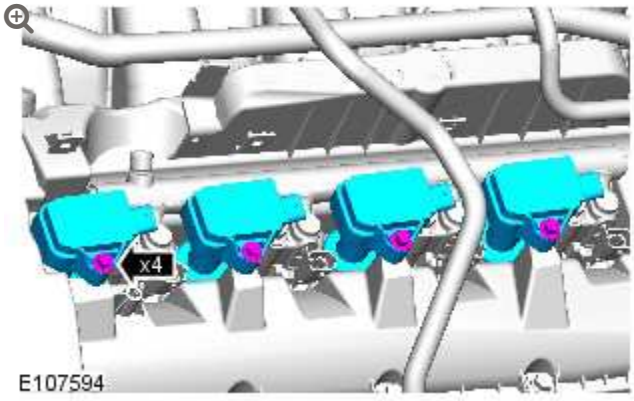

20.

CAUTION:

Make a note of the fuel injector clamp alignment to the fuel rail prior to removal.

NOTE:

LH illustration shown, RH is similar.

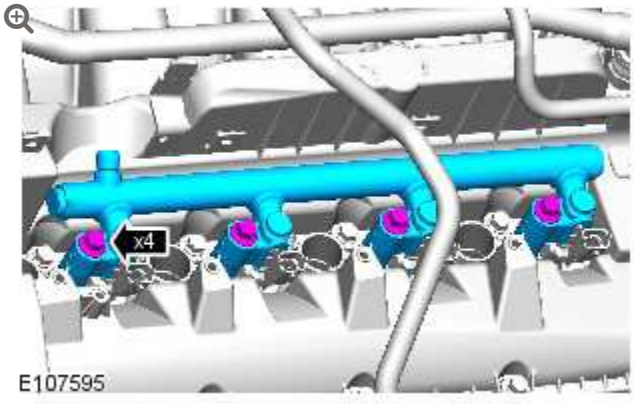

21.

NOTE:

This step is only required if a new fuel rail is installed.

Refer to: Fuel Rail Pressure (FRP) Sensor (303-14A Electronic Engine Controls - V8 5.0L Petrol, Removal and Installation).

22.

CAUTIONS:

- Make sure that the special tool is located correctly to the fuel injector prior to removing the fuel injector.
- Make sure that the special tool is held square to the fuel injector during removal.
- Make sure that all open ports are covered to prevent any foreign material ingress.

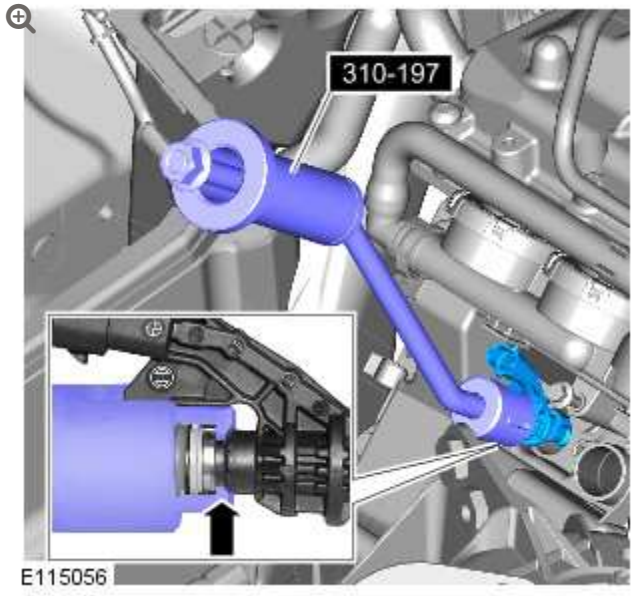

Special Tool(s): 310-197

23.

CAUTION:

If the fuel injector is being removed without a new component being installed, the fuel injector clamp must remain with the fuel injector it is removed with.

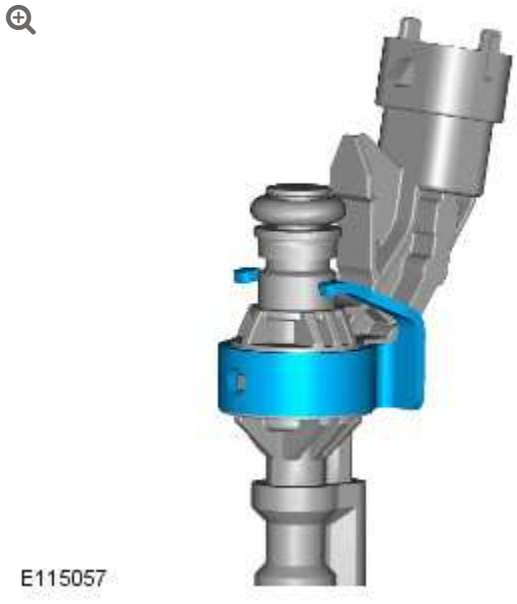

24. **CAUTIONS:**

- Do not use a knife to remove the Teflon seal as damage could occur to the fuel injector.
- Do not cut the Teflon seal to deep as damage could occur to the fuel injector.
- Pinch the Teflon seal to allow the tool to cut the Teflon seal without damaging the fuel injector.

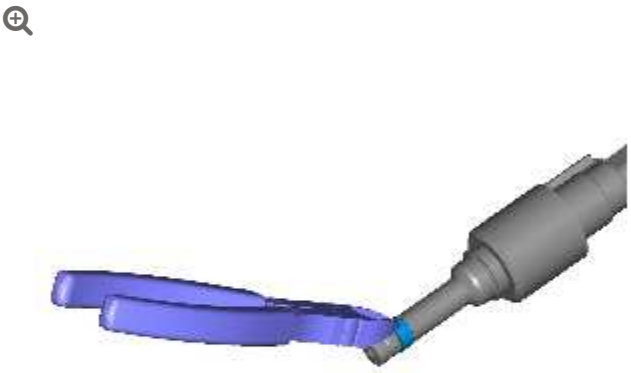

E115058

25. **CAUTION:**

Do not use any sharp tools to remove the O-ring seal as damage could occur to the fuel injector.

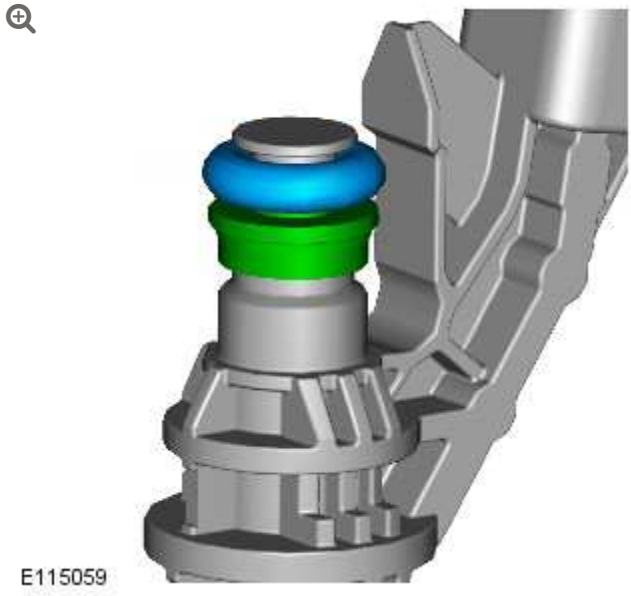

26.

WARNING:

Do not work on or under a vehicle supported only by a jack. Always support the vehicle on safety stands.

Raise and support the vehicle.

27.

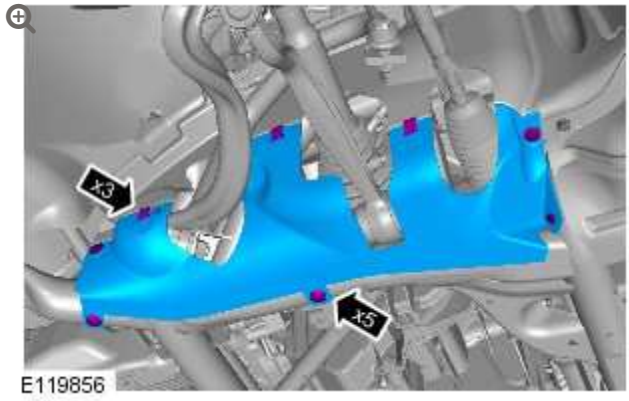

28.

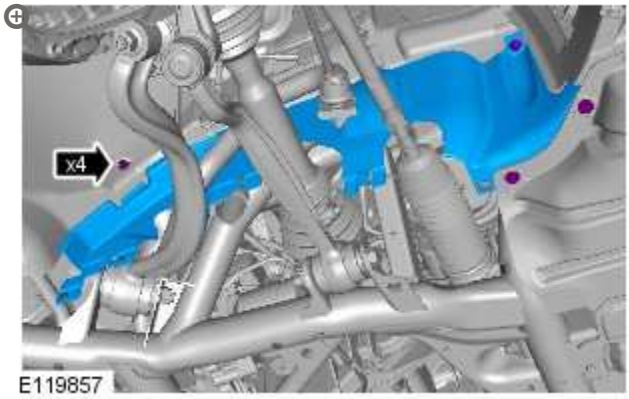

29. Refer to: Generator (414-02B, Removal and Installation).

30.

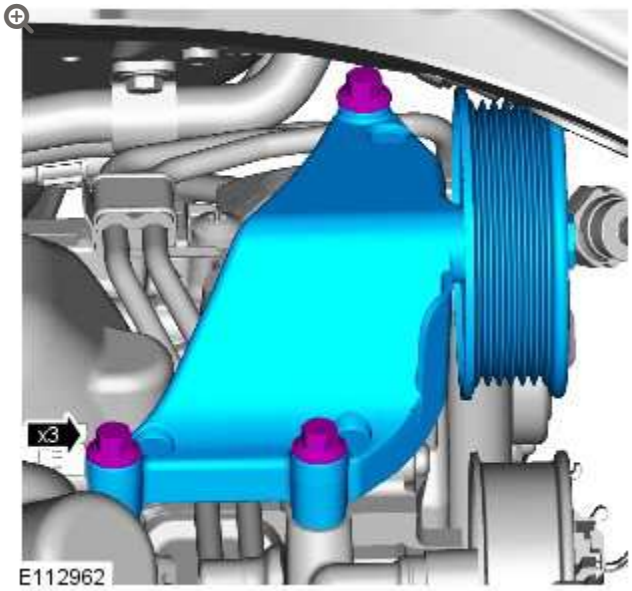

31.

NOTE:

Engine shown removed for clarity.

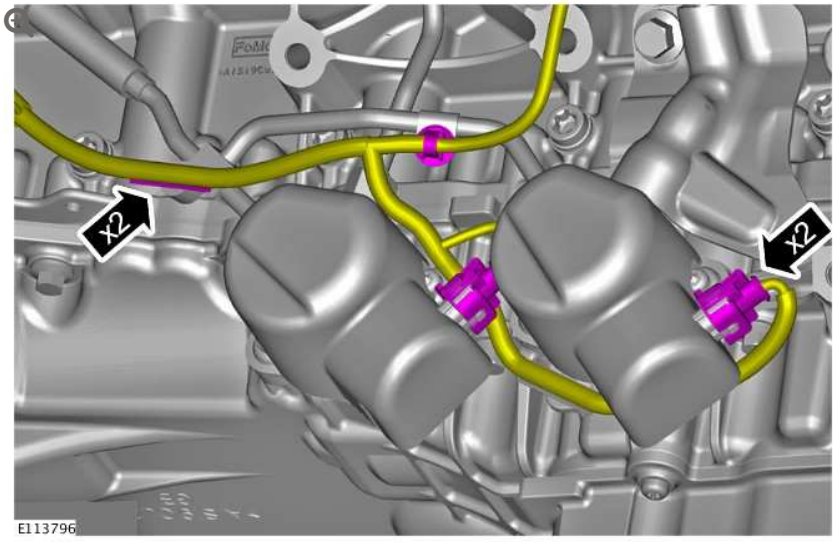

32.

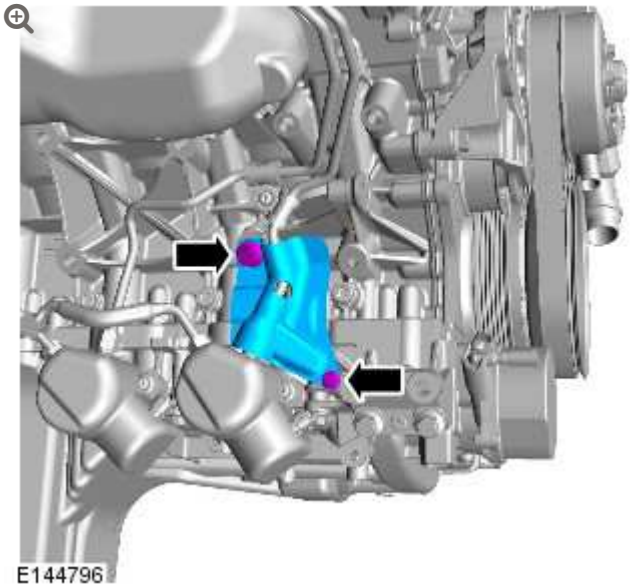

33.

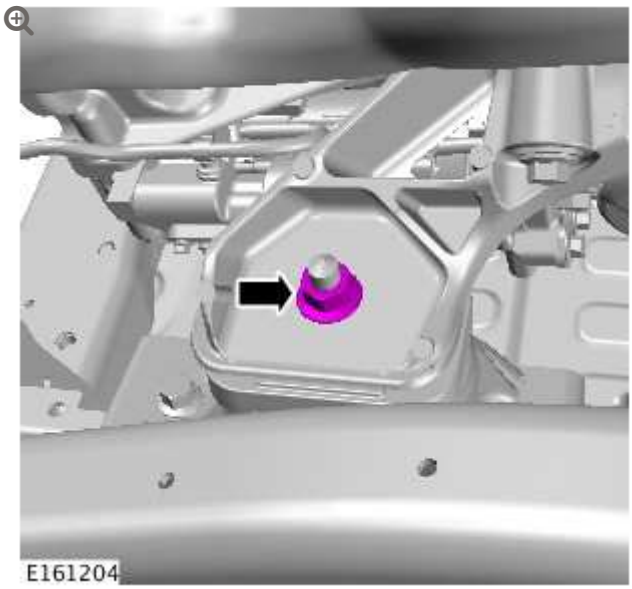

34.

CAUTION:

Use a wooden block to protect the oil pan when supporting the engine.

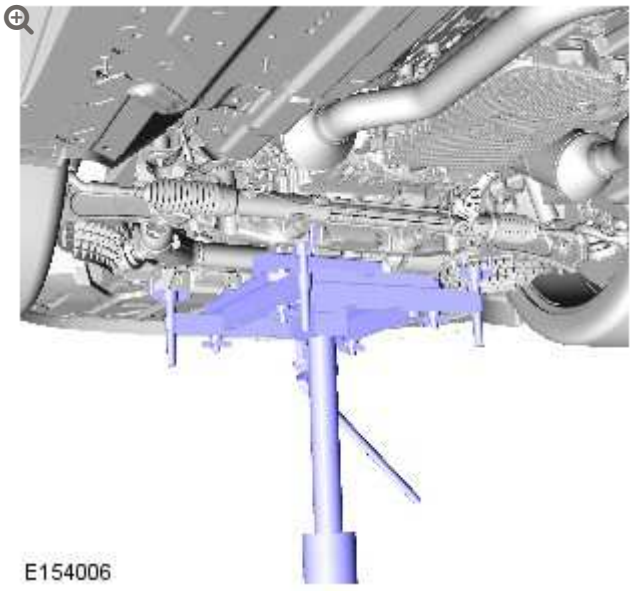

Using a suitable hydraulic jack, support the engine.

35.

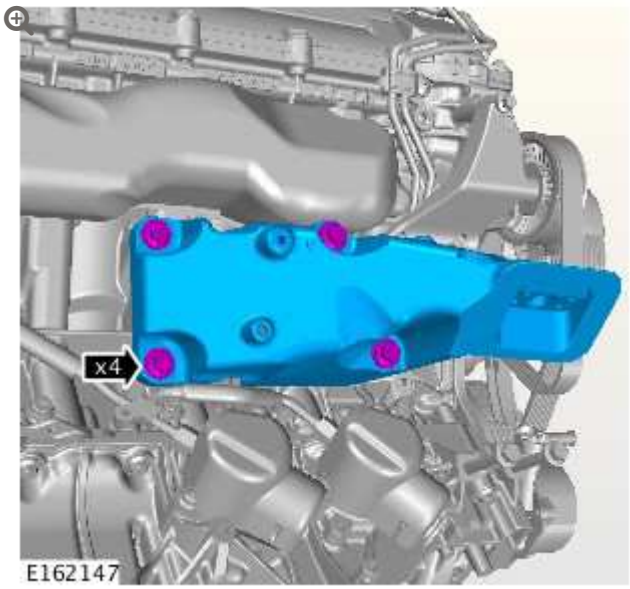

36.

WARNING:

Do not smoke or carry lighted tobacco or open flame of any type when working on or near any fuel related components. Highly flammable vapors are always present and may ignite. Failure to follow these instructions may result in personal injury.

CAUTIONS:

- Remove and discard the high-pressure fuel supply lines.
- Be prepared to collect escaping fluids.
- Make sure that all openings are sealed. Use new blanking caps.

NOTE:

Engine shown removed for clarity.

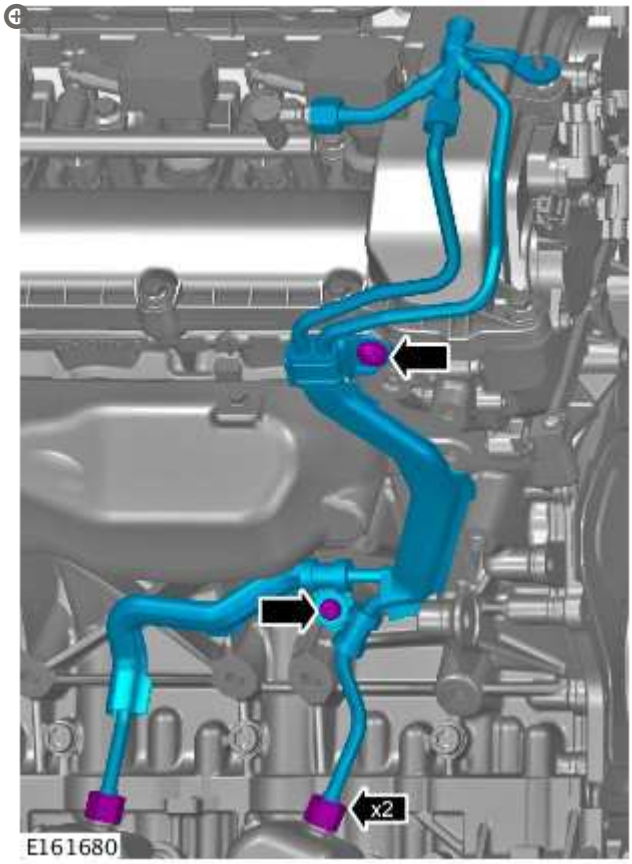

INSTALLATION

1.

CAUTION:

Lubricate only the union threads with clean engine oil.

NOTES:

- Engine shown removed for clarity.
- Install the bolts and unions finger tight before final tightening.
- Remove and discard the blanking caps.

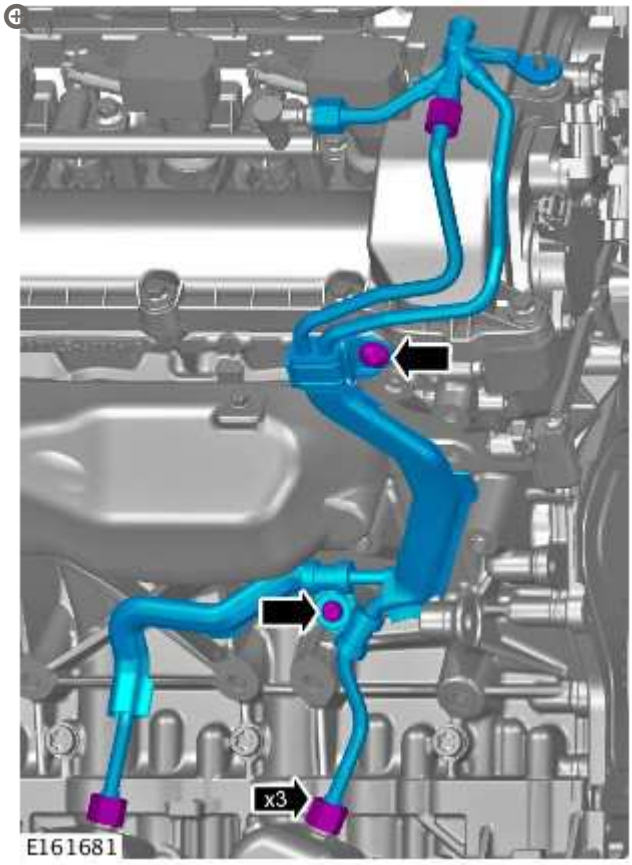

2.

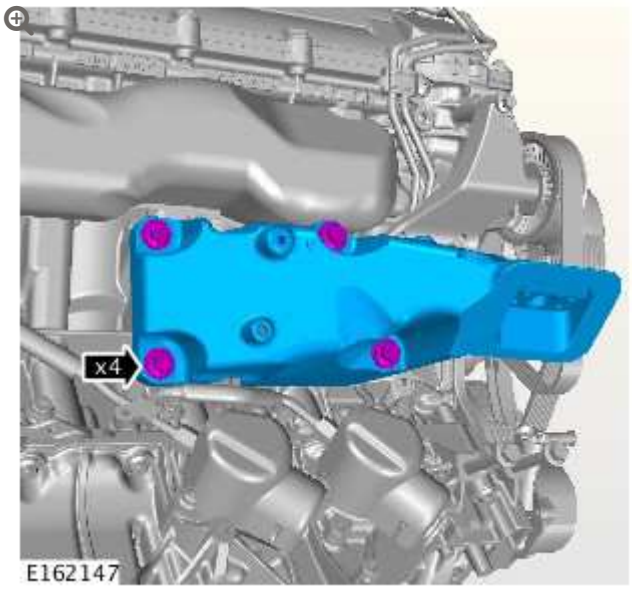

Torque:

Stage 1: **45 Nm**

Stage 2: **60°**

3.

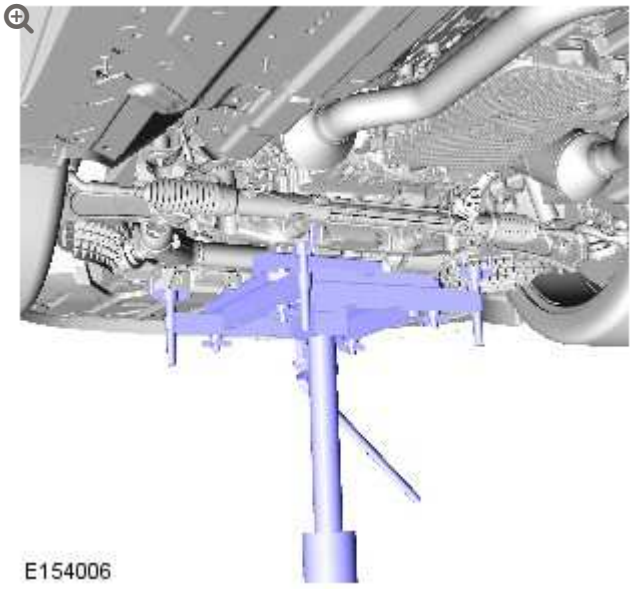

Remove the special tool.

4.

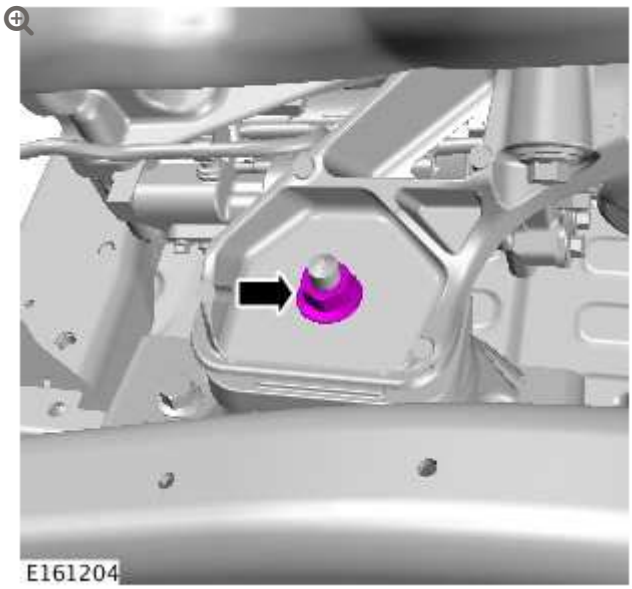

Torque: **100 Nm**

5.

NOTE:

Some components shown removed for clarity.

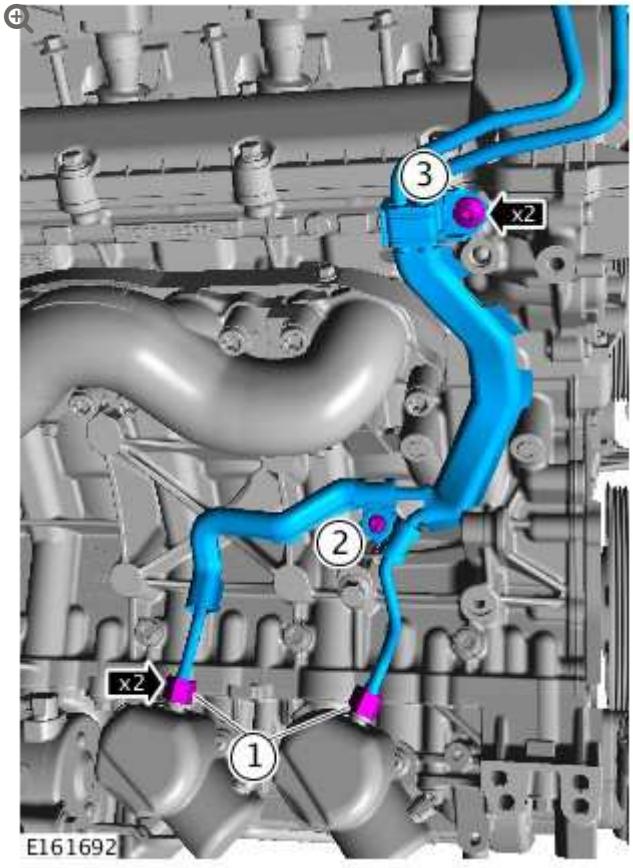

Torque:

Unions (1) **21 Nm**

M6 (2) **11 Nm**

M8 (3) **25 Nm**

6.

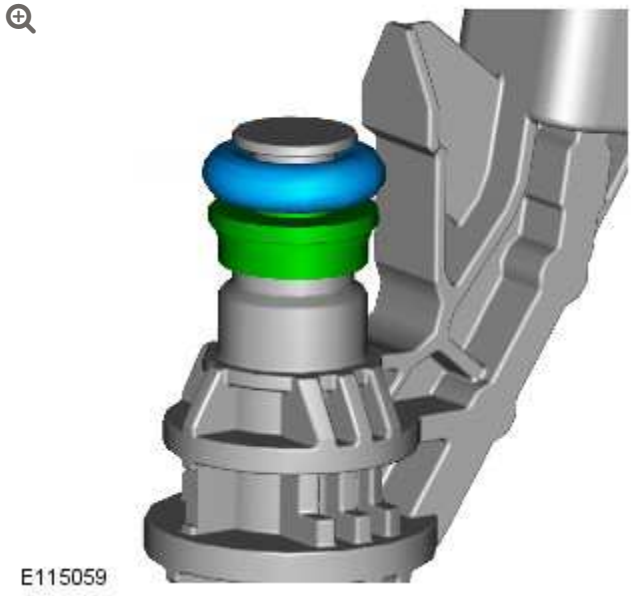

Install new O-ring seals.

7.

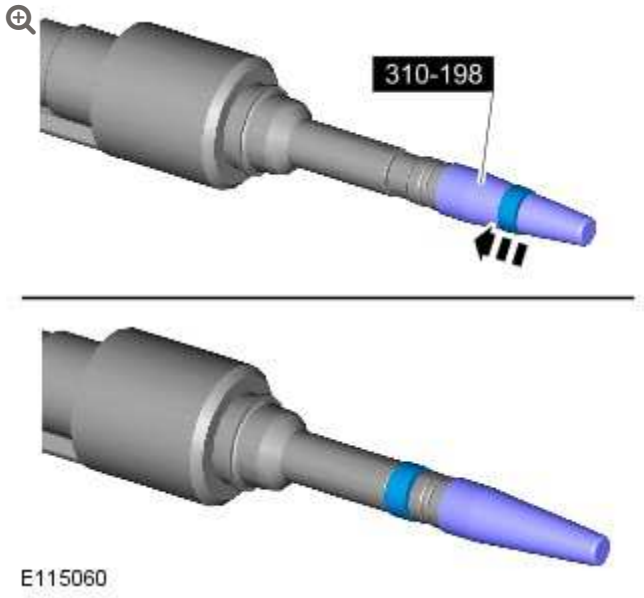

Install new Teflon seals.

Special Tool(s): 310-198

8.

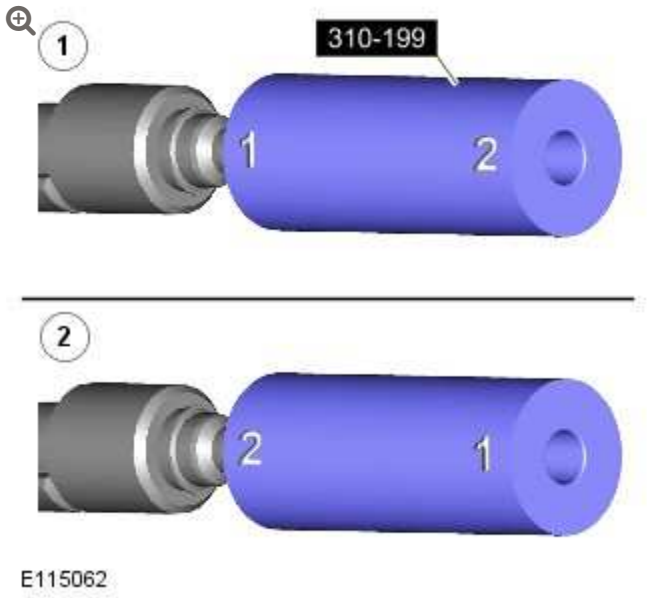

E115062

Special Tool(s): 310-199

9.

CAUTION:

If the original fuel injector is being installed, the original fuel injector clamp must installed with the fuel injector it was removed with.

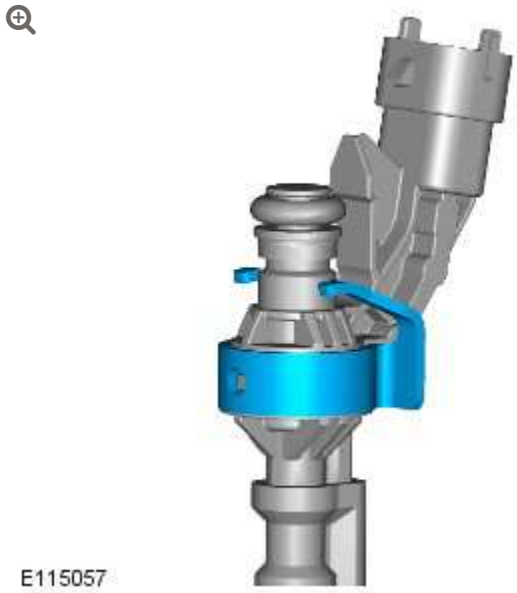
E115057

10.

CAUTION:

If a new cylinder head has been installed then the special tool 310-200-02 without the thread must be used to install the fuel rail.

NOTE:

LH illustration shown, RH is similar.

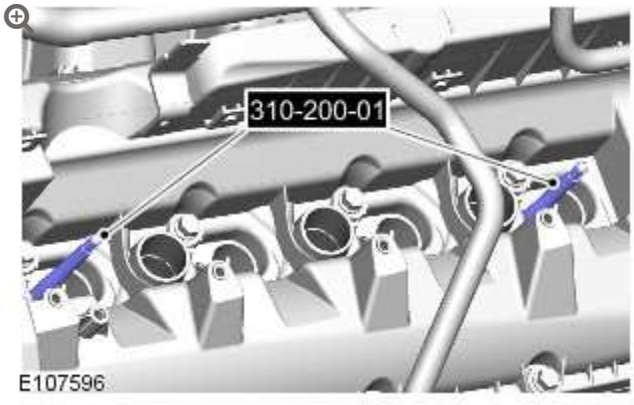

Special Tool(s): 310-200-01, 310-200-02

11.

CAUTIONS:

- Make sure that the area around the open fuel injector ports are clean and free of foreign material and lubricant prior to installing the fuel injector.
- When installing the fuel injector(s), make sure that the Teflon seal is clean and free of foreign material and lubricant.

NOTE:

LH illustration shown, RH is similar.

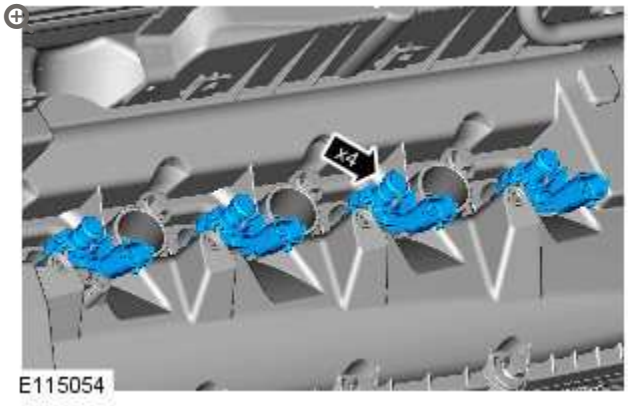

12.

NOTE:

This step is only required if a new fuel rail is installed.

Refer to: Fuel Rail Pressure (FRP) Sensor (303-14A Electronic Engine Controls - V8 5.0L Petrol, Removal and Installation).

13.

CAUTIONS:

- If new fuel injectors are installed, a new injector clamp must be installed.
- Make sure that the fuel injector is aligned and installed into the fuel rail correctly, as noted in the removal step.
- Tighten the fuel rail retaining bolts a turn at a time until the correct torque is achieved.

NOTES:

- Lubricate the fuel injector O-ring seals with clean engine oil.
- LH illustration shown, RH is similar.

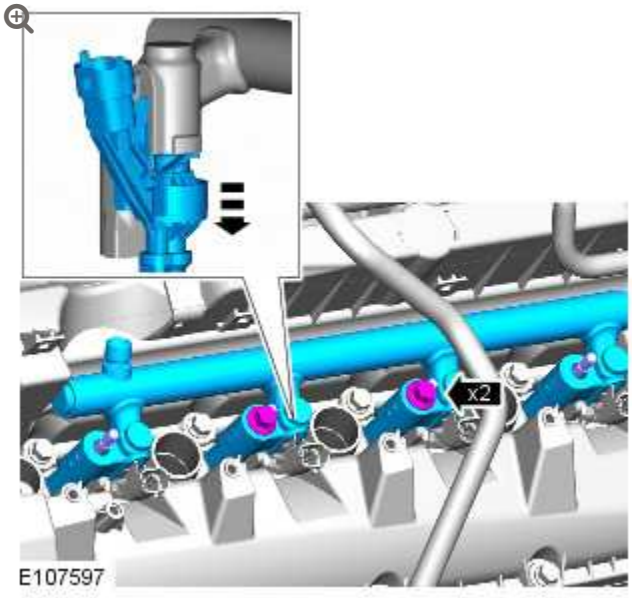

Torque: **20 Nm**

14.

NOTE:

LH illustration shown, RH is similar.



Special Tool(s): 310-200-01, 310-200-02

15. **NOTE:**

LH illustration shown, RH is similar.

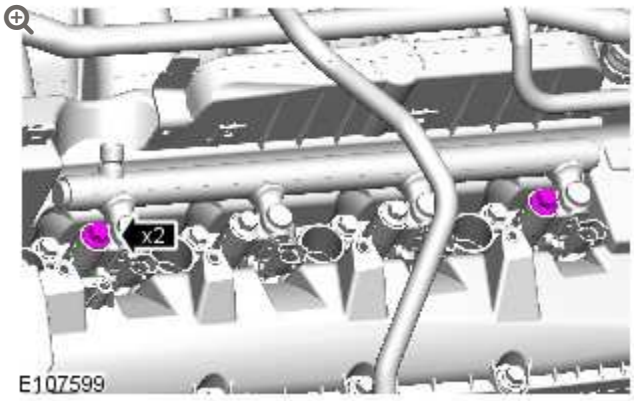

Torque: **20 Nm**

16. **NOTES:**

- Tighten the bolts in the indicated sequence.
- LH illustration shown, RH is similar.

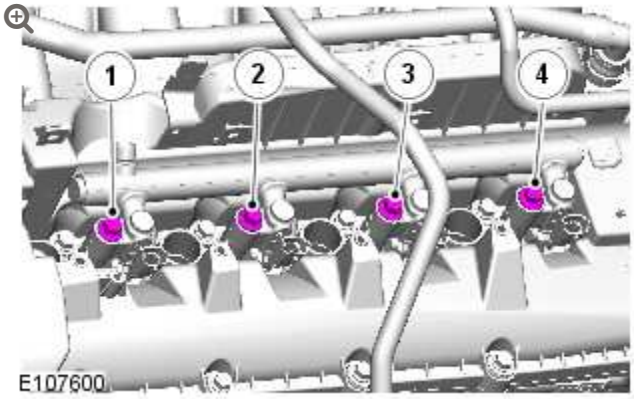

Torque:

Bolt 2 **30 Nm**

Bolt 3 **30 Nm**

Bolt 1 **30 Nm**

Bolt 4 **30 Nm**

17. **NOTE:**

LH illustration shown, RH is similar.

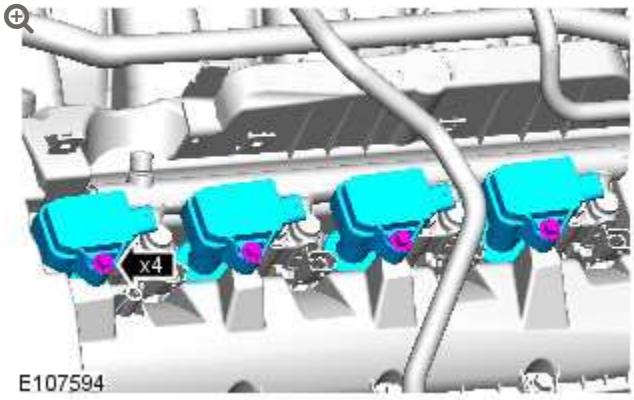

Torque: **7 Nm**

18. **NOTE:**

LH illustration shown, RH is similar.

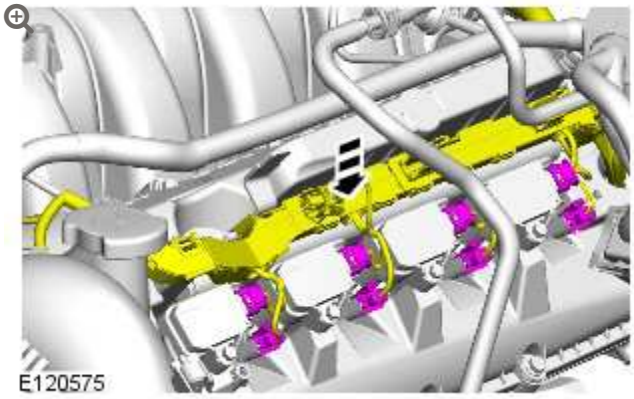

19.

NOTE:

If equipped.

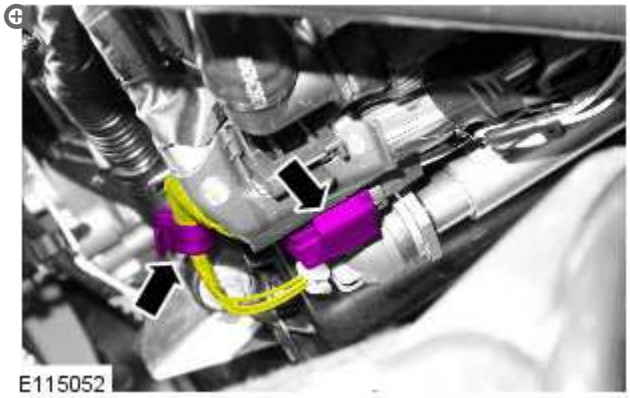

20.

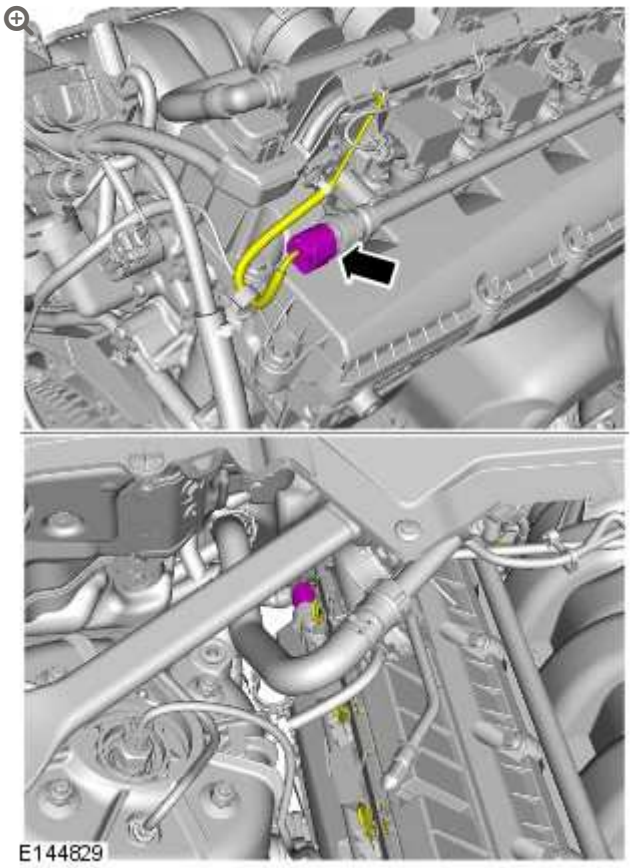

21.

NOTE:

Remove and discard the blanking caps.

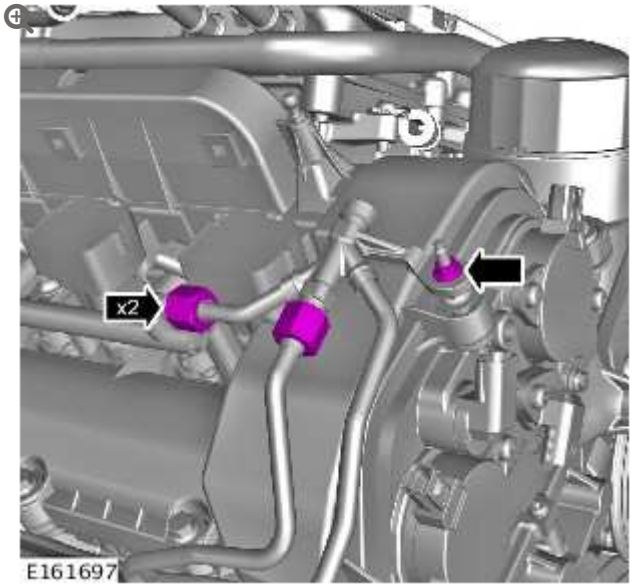

Torque:

Unions **21 Nm**

Nut **6 Nm**

22.

WARNING:

Do not work on or under a vehicle supported only by a jack. Always support the vehicle on safety stands.

Raise and support the vehicle.

23.

NOTE:

Some components shown removed for clarity.

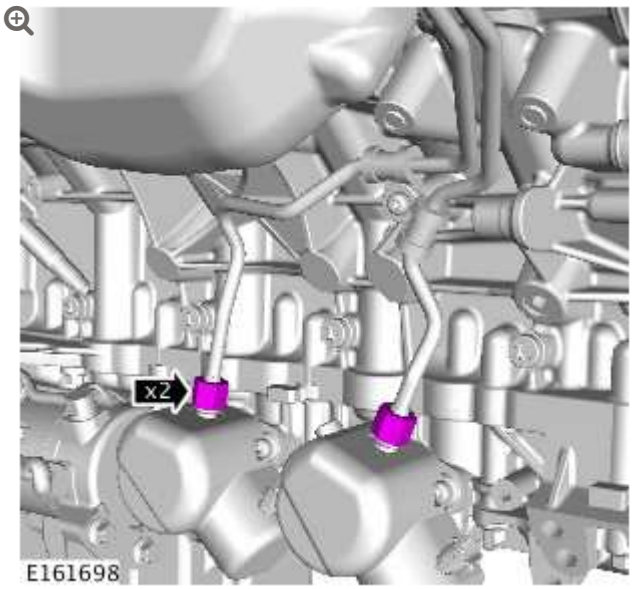

Torque: **21 Nm**

24.

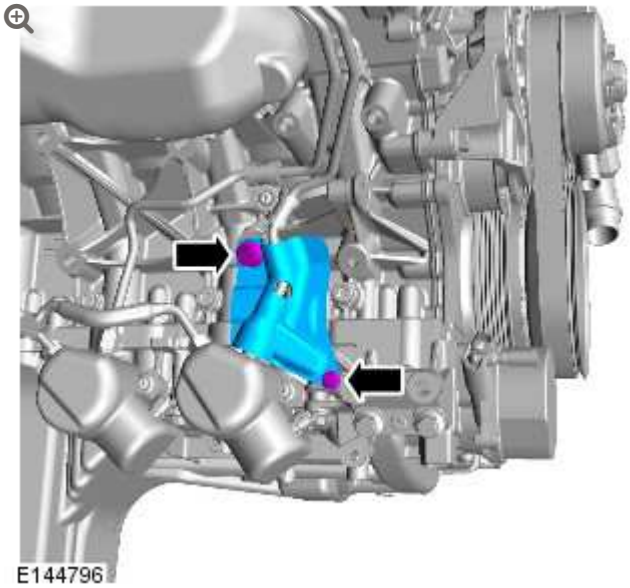

Torque:

M6 **12 Nm**

M10 **29 Nm**

25.

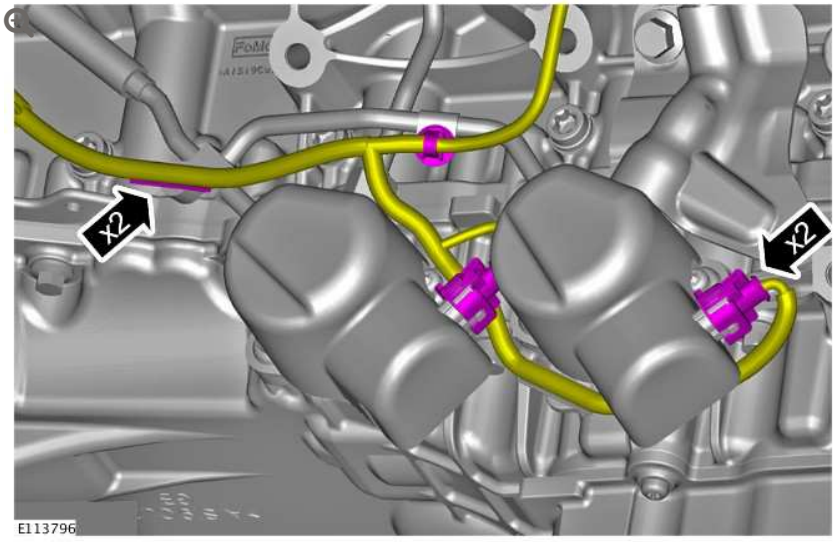

26.

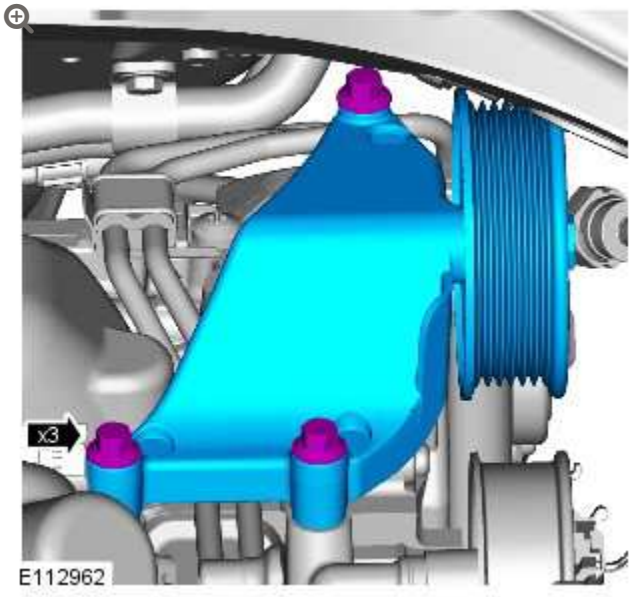

Torque: **25 Nm**

27. Refer to: Generator (414-02B, Removal and Installation).

28.

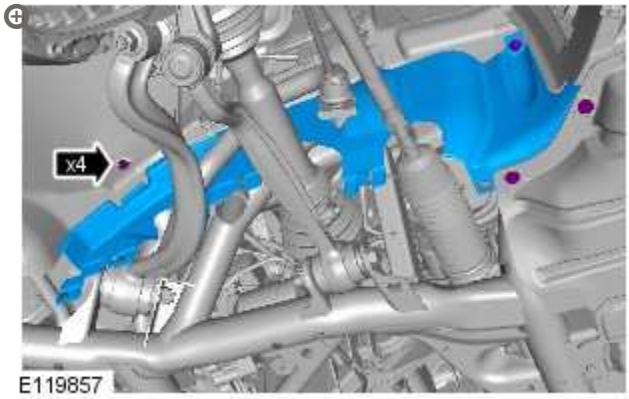

29.

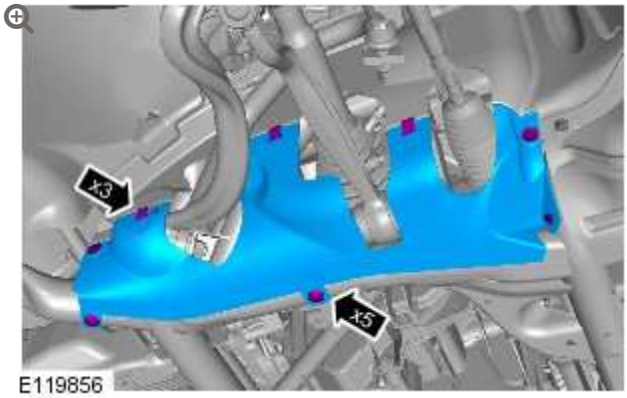

30. Lower the vehicle.

31.

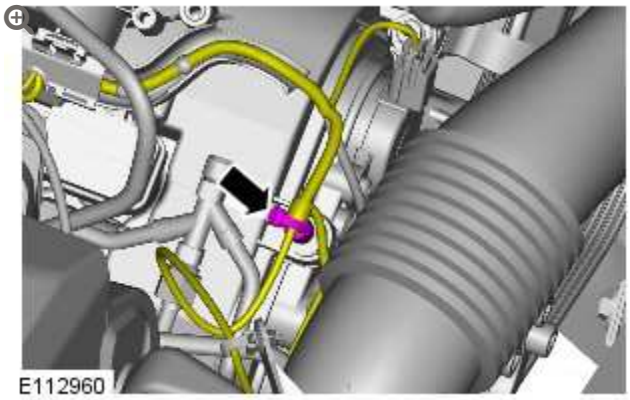

32.

CAUTION:

Lubricate only the union threads with clean engine oil.

NOTES:

- Do not tighten at this stage.
- Remove and discard the blanking caps.

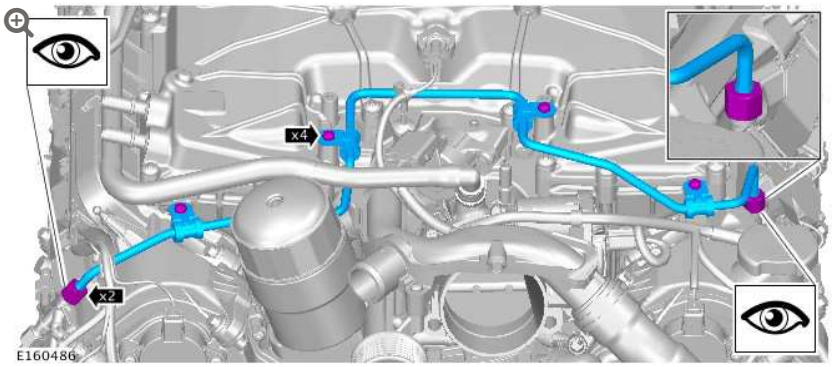

33.

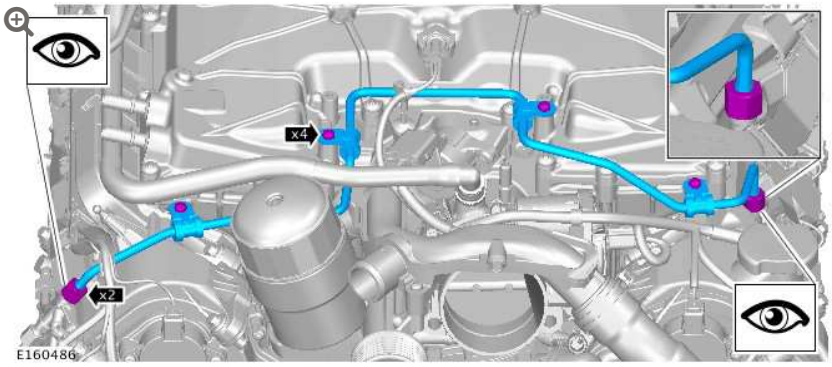

Torque:

Unions **21 Nm**

Bolts **8 Nm**

34.

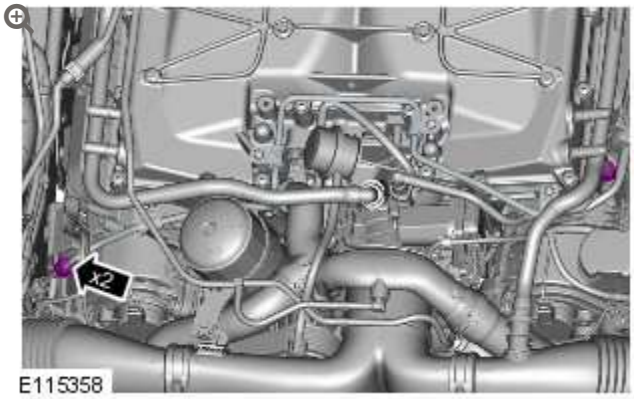

Torque: **21 Nm**

35.

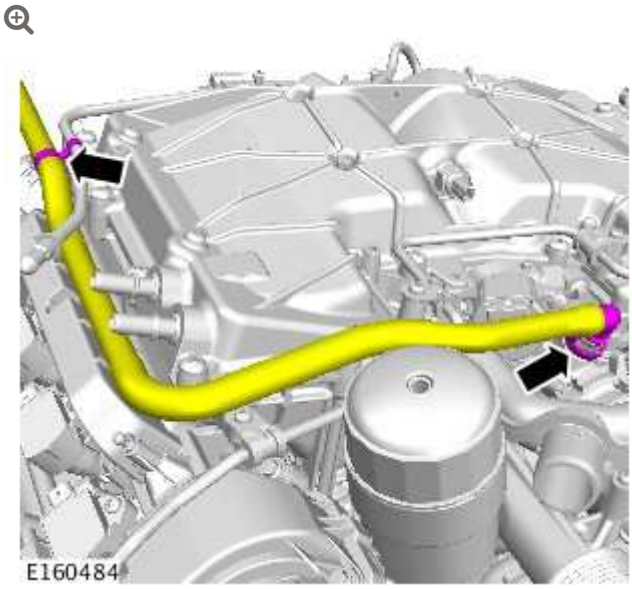

36.

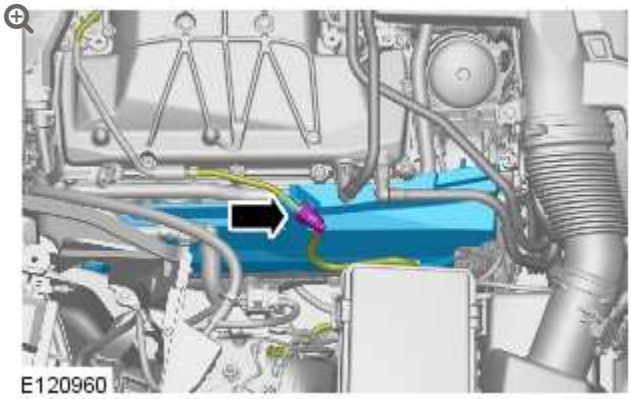

37.

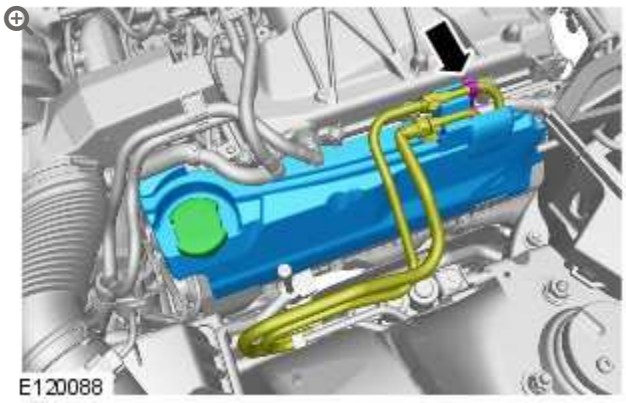

38.

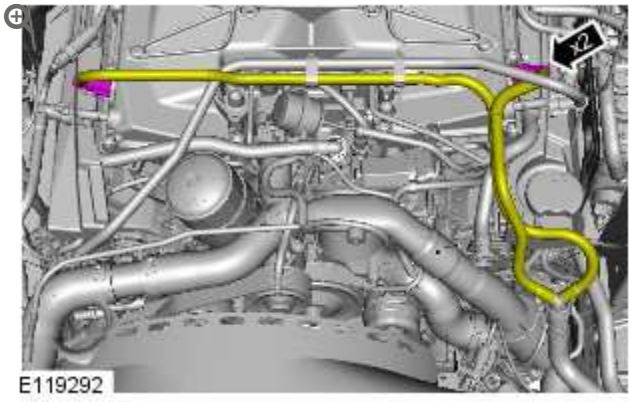

39.

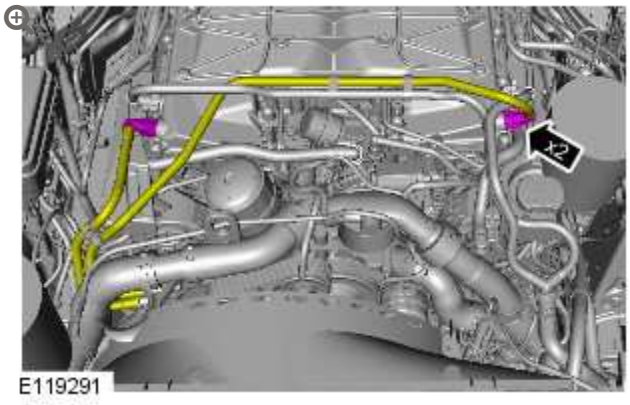

40. Refer to: Air Cleaner RH (303-12A Intake Air Distribution and Filtering - V8 5.0L Petrol, Removal and Installation).

41.

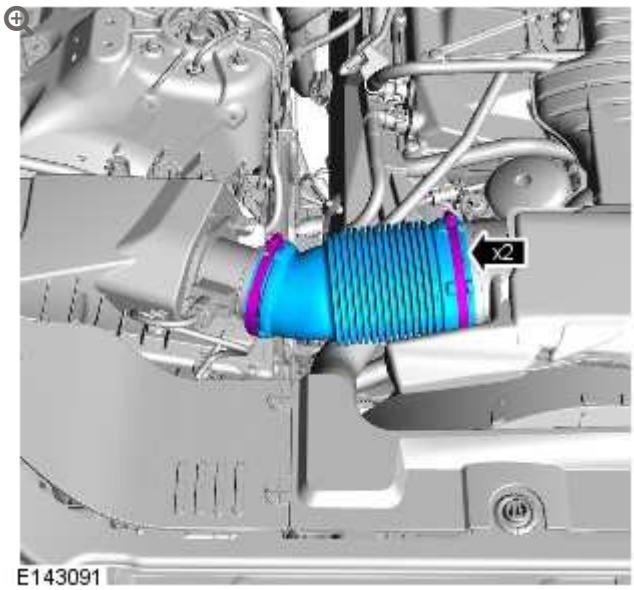

Torque: **3.5 Nm**

42. Refer to: Air Cleaner Outlet Pipe T-Connector (303-12B Intake Air Distribution and Filtering - V8 S/C 5.0L Petrol, Removal and Installation).

43. Refer to: Specifications (414-00 Battery and Charging System - General Information, Specifications).

HIGH PRESSURE FUEL PUMP 1 (G1225237)

REMOVAL AND INSTALLATION

19.45.31	HIGH PRESSURE FUEL PUMP – REAR – RENEW	5000 CC, AJ V8, SUPERCHARGED	3.8	USED WITHINS	+

REMOVAL

CAUTION:

Always carry out the cleaning process before carrying out any repairs to the fuel injection system components. Failure to follow this instruction may result in foreign matter ingress to the fuel injection system.

NOTE:

Removal steps in this procedure may contain installation details.

	All vehicles

1. Refer to: Petrol and Petrol-Ethanol Fuel Systems Health and Safety Precautions (100-00 General Information, Description and Operation).

2. Refer to: Fuel System Pressure Release - V8 5.0L Petrol/V8 S/C 5.0L Petrol (310-00 Fuel System - General Information, General Procedures).

3. Disconnect the battery ground cable.
   Refer to: Specifications (414-00 Battery and Charging System - General Information, Specifications).

4. **WARNING:**

   Do not work on or under a vehicle supported only by a jack. Always support the vehicle on safety stands.

   Raise and support the vehicle.

5. Refer to: Engine Undershield (501-02 Front End Body Panels, Removal and Installation).

6. Refer to: Fuel Injection Component Cleaning (303-04B Fuel Charging and Controls - V8 S/C 5.0L Petrol, General Procedures).

7. Refer to: Air Cleaner Outlet Pipe T-Connector (303-12B Intake Air Distribution and Filtering - V8 S/C 5.0L Petrol, Removal and Installation).

8.

CAUTION:

Be prepared to collect escaping coolant.

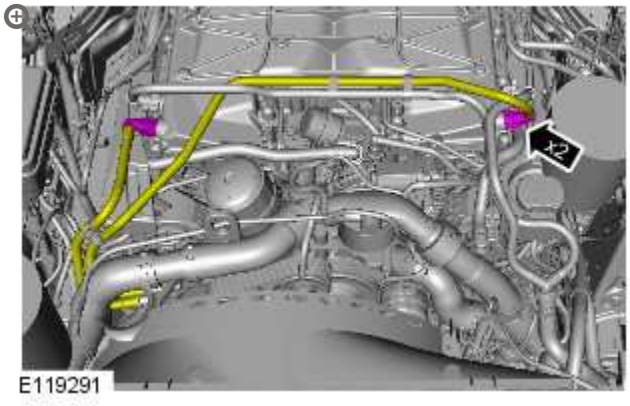

9.

WARNING:

Be prepared to collect escaping fluids.

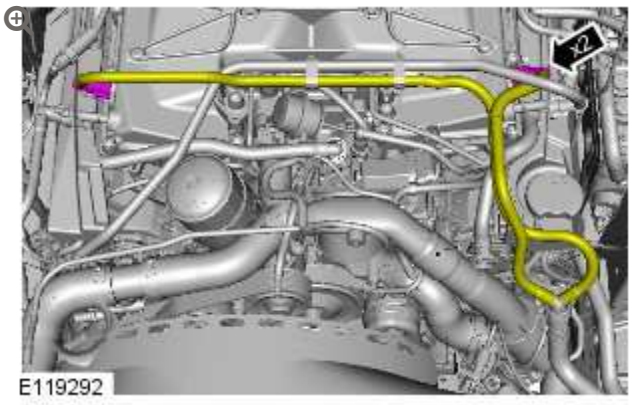

10.

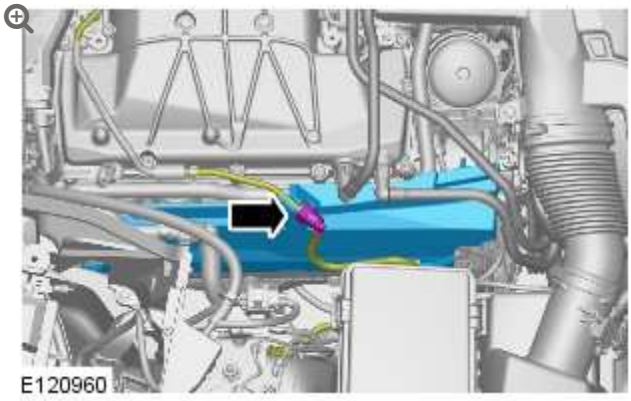

11.

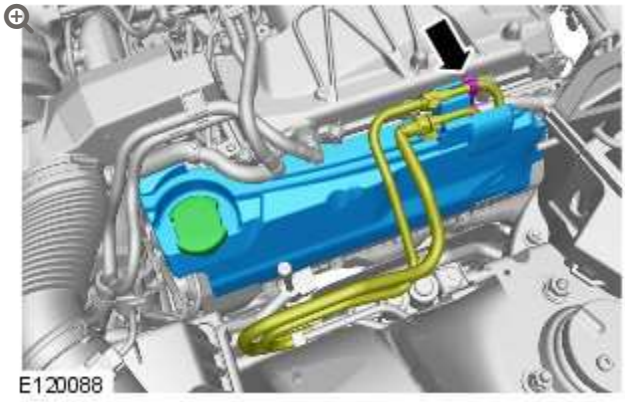

12.

CAUTIONS:

- Be prepared to collect escaping fluids.
- Make sure that all openings are sealed. Use new blanking caps.

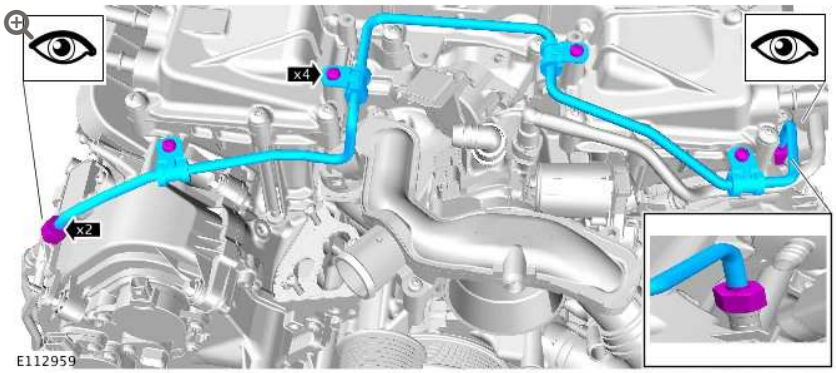

13.

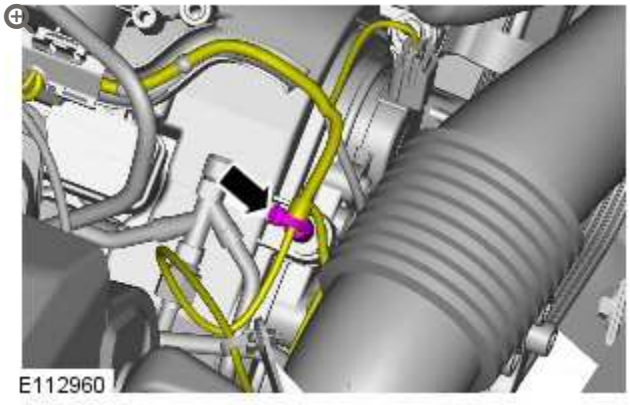

14.

CAUTIONS:

- Be prepared to collect escaping fluids.
- Make sure that all openings are sealed. Use new blanking caps.

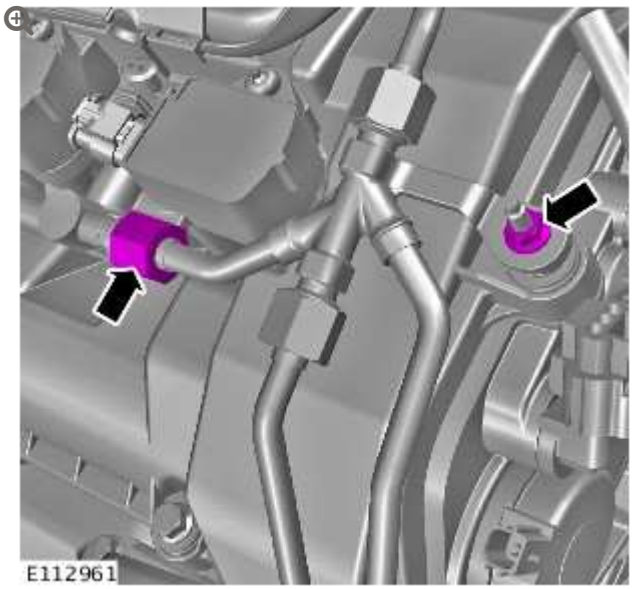

15. **WARNING:**

    Do not work on or under a vehicle supported only by a jack. Always support the vehicle on safety stands.

    Raise and support the vehicle.

16. Refer to: Engine Mount RH (303-01B Engine - V8 S/C 5.0L Petrol, Removal and Installation).

17. Refer to: Generator - V8 S/C 5.0L Petrol (414-02 Generator and Regulator - V8 5.0L Petrol/V8 S/C 5.0L Petrol, Removal and Installation).

	Left-hand drive vehicles

18.

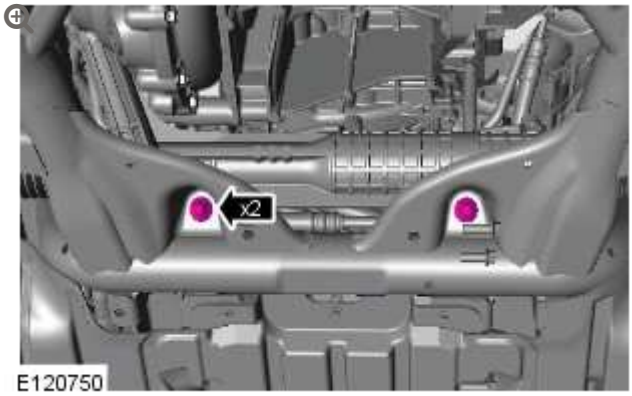

19.

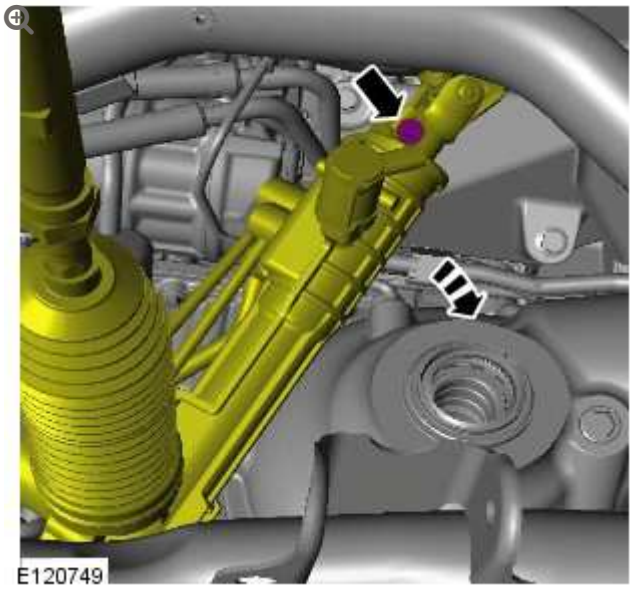

All vehicles

20.

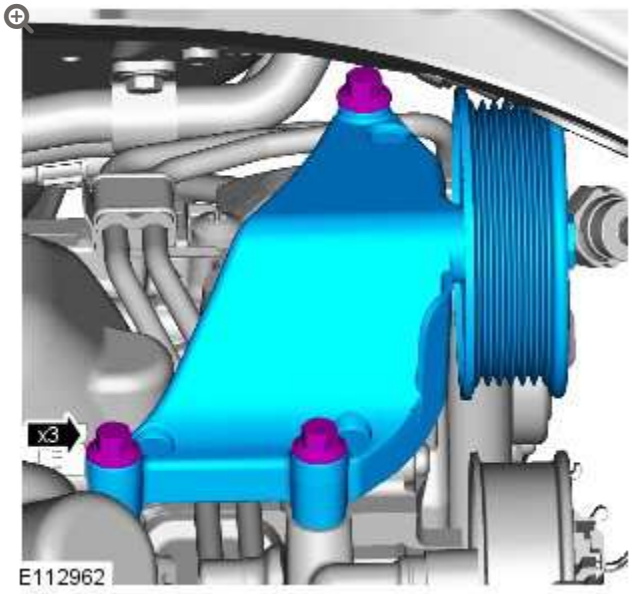

21.

NOTE:

Engine shown removed for clarity.

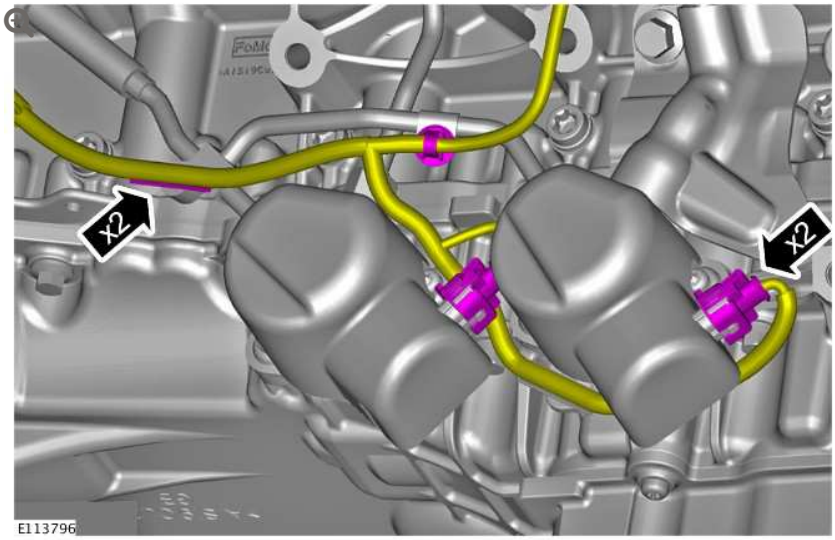

22.

CAUTIONS:

- Be prepared to collect escaping fluids.
- Make sure that all openings are sealed. Use new blanking caps.

NOTE:

Engine shown removed for clarity.

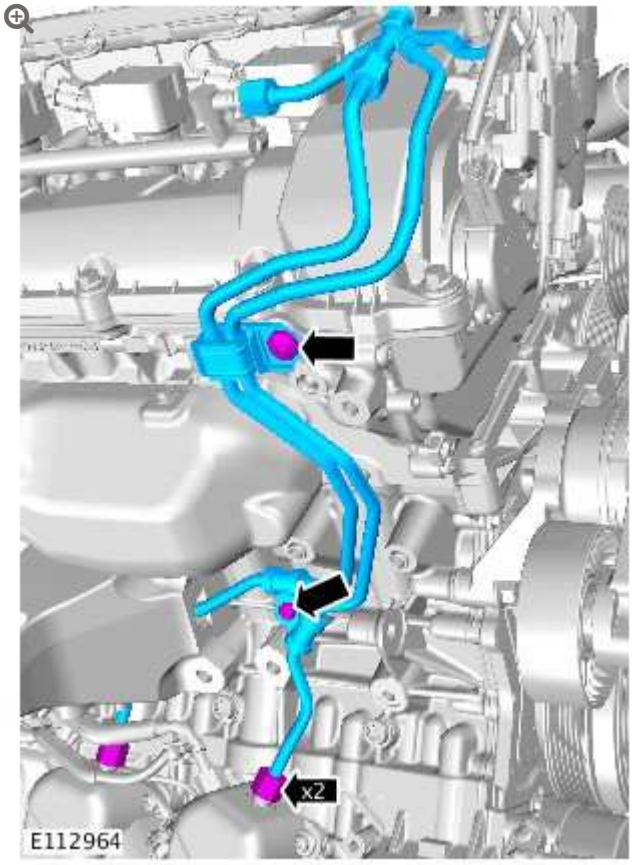

23.

CAUTIONS:

- Be prepared to collect escaping fluids.
- Make sure that all openings are sealed. Use new blanking caps.

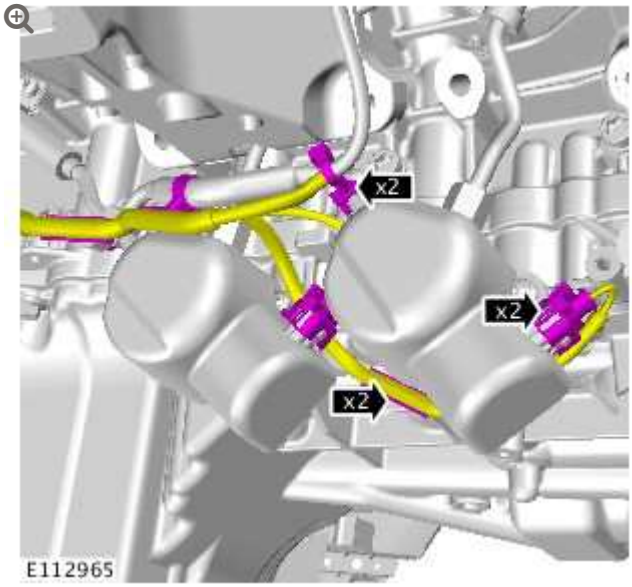

24.

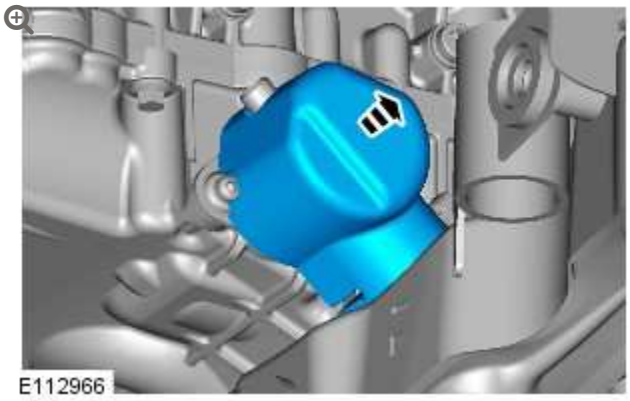

25.

CAUTION:

Be prepared to collect escaping fluids.

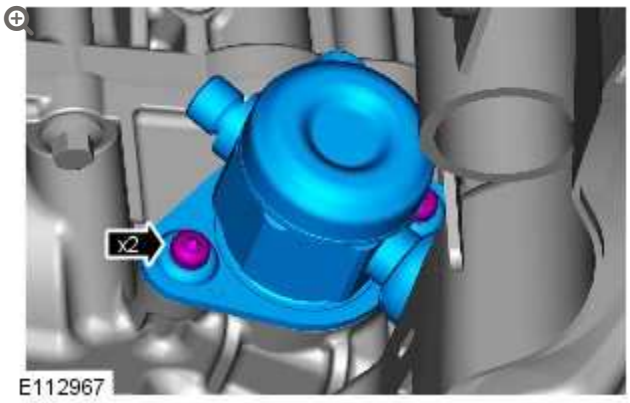

Loosen the Torx screws a turn each at a time.

26.

CAUTION:

Be prepared to collect escaping fluids.

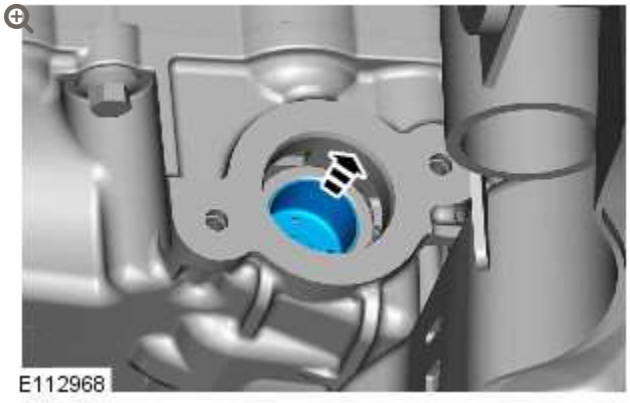

INSTALLATION

All vehicles

1.

NOTE:

Lubricate the fuel rail high-pressure fuel pump bucket with clean engine oil.

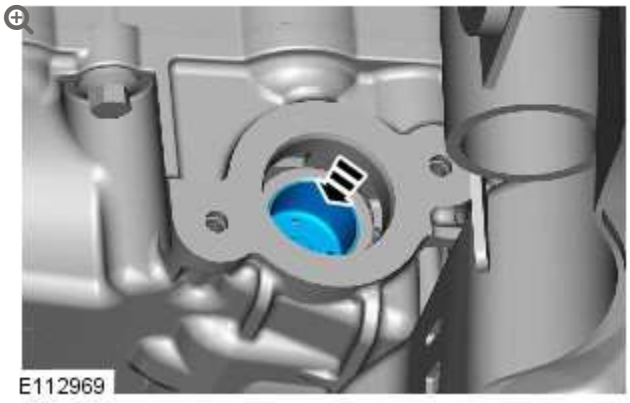

2.

CAUTION:

Tighten the Torx screws a turn at a time until the correct torque is achieved.

NOTE:

Lubricate the fuel rail high-pressure fuel pump O-ring seal with clean engine oil.

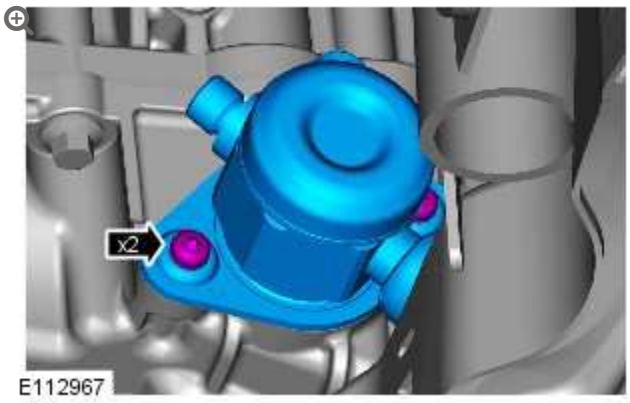

Torque: **11 Nm**

3.

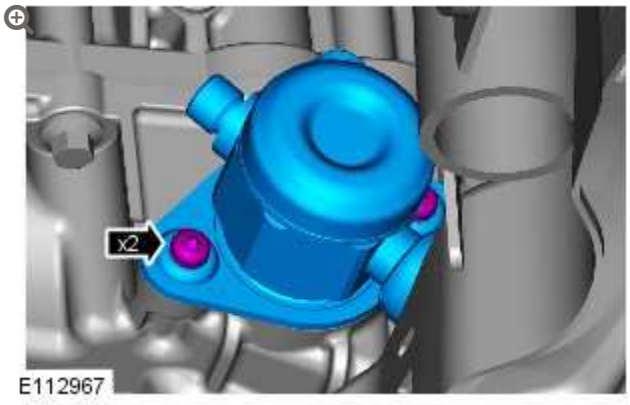

Loosen the Torx screws half a turn each.

4.

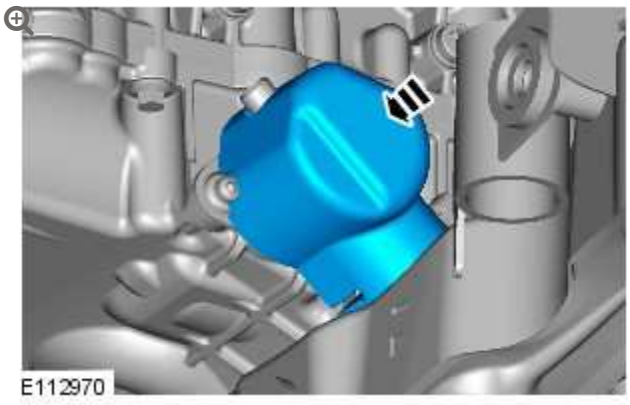

5.

CAUTIONS:

- Install new high-pressure fuel supply lines.
- Lubricate only the union threads with clean engine oil.

NOTES:

- Remove and discard the blanking caps.
- Engine shown removed for clarity.
- Install the bolt and unions fully finger tight before final tightening.

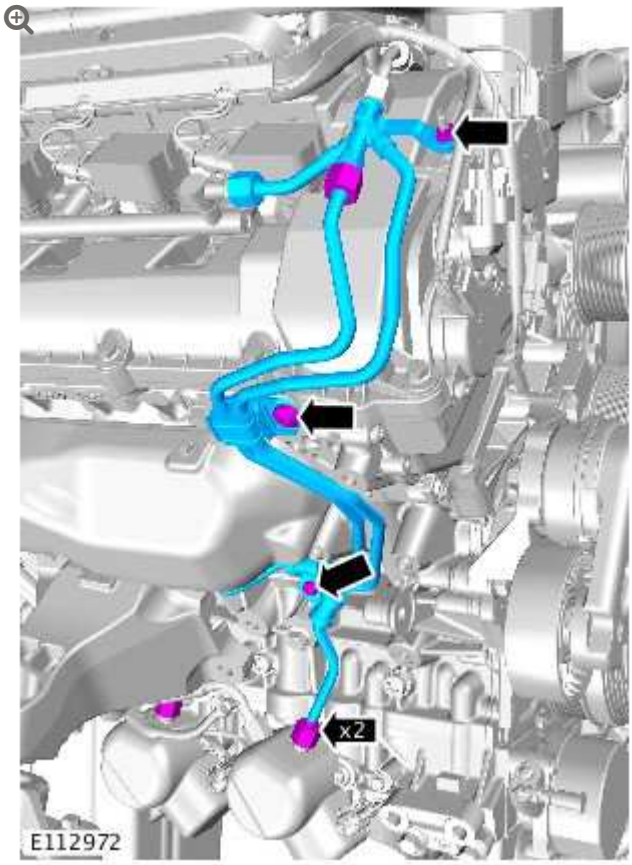

6.

CAUTION:

Care must be taken when positioning the fuel rail high-pressure fuel pump cover to one side.

NOTE:

Fuel rail high-pressure fuel pump cover shown removed for clarity.

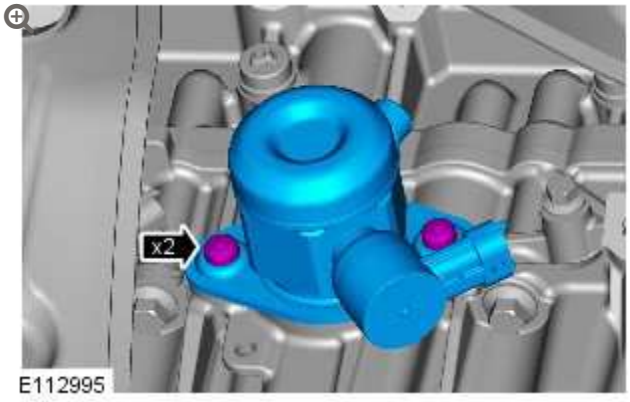

Torque: **11 Nm**

7. Lower the vehicle.

8.

NOTES:

- Do not tighten at this stage.
- Remove and discard the blanking caps.

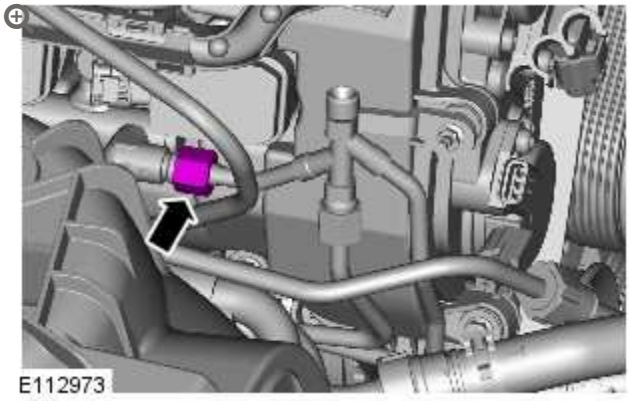

9.

NOTE:

Engine shown removed for clarity.

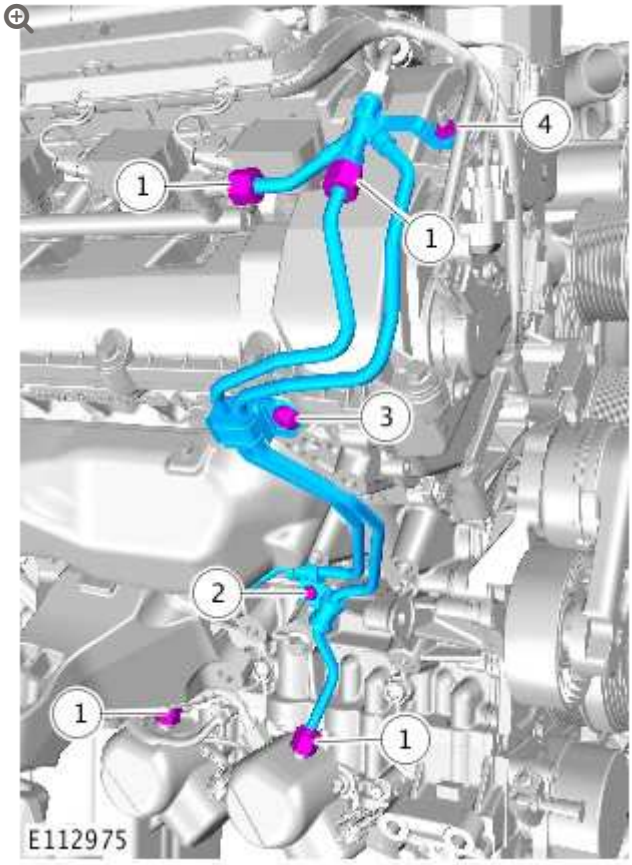

- *Torque:*

  Unions (1) **21 Nm**

M6 (2) **11 Nm**

M8 (3) **25 Nm**

M5 nut (4) **6 Nm**

10.

NOTE:

Engine shown removed for clarity.

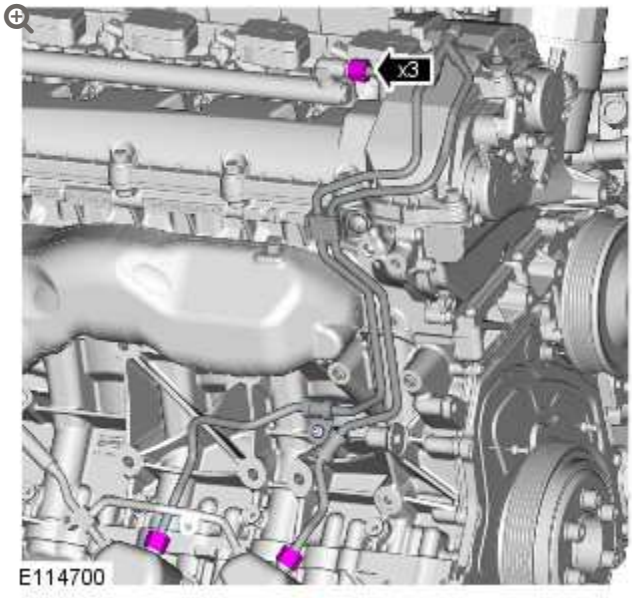

Torque: **21 Nm**

11.

NOTES:

- Install the bolt and unions finger tight before final tightening.
- Remove and discard the blanking caps.

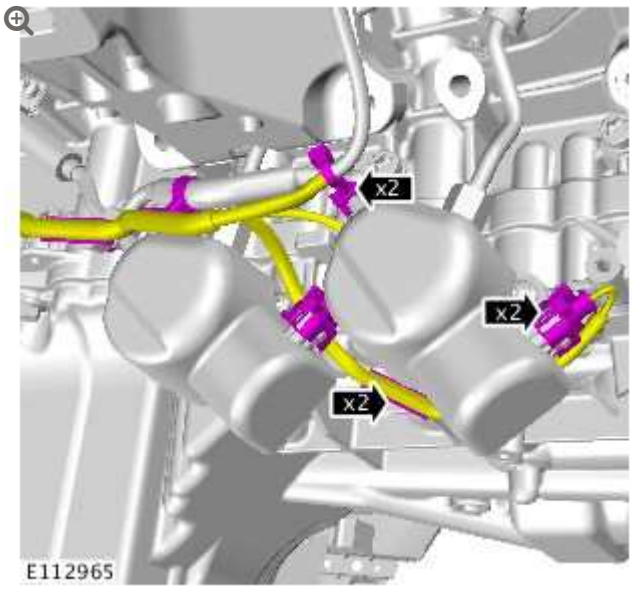

- *Torque:*

  Unions **21 Nm**

  M6 **11 Nm**

12.

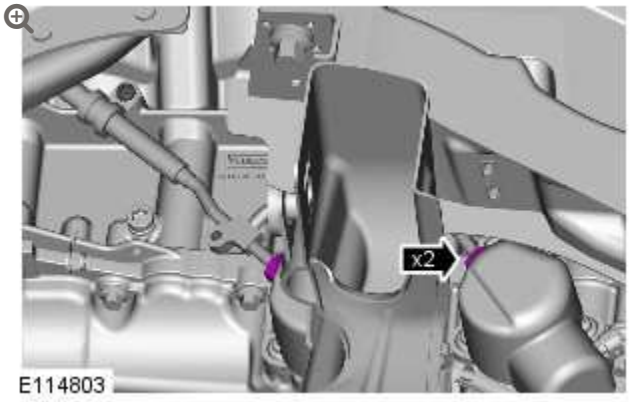

Torque: **21 Nm**

13.

NOTE:

Engine shown removed for clarity.

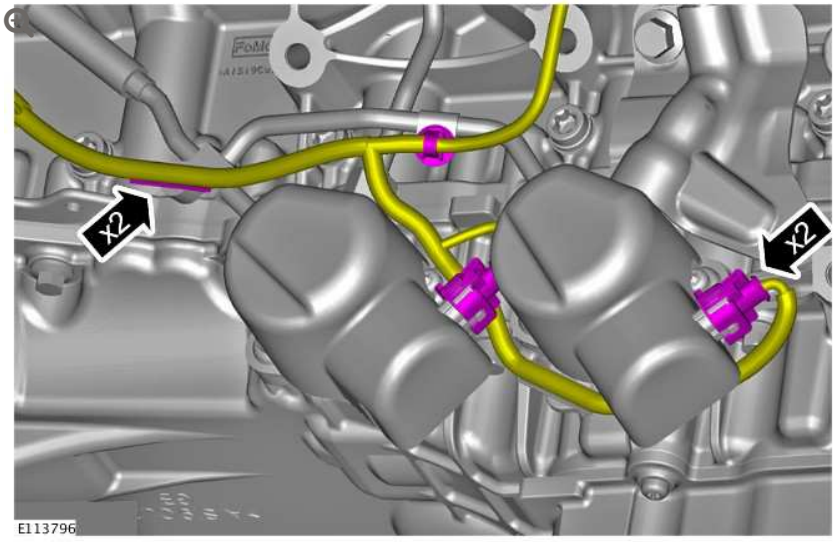

14.

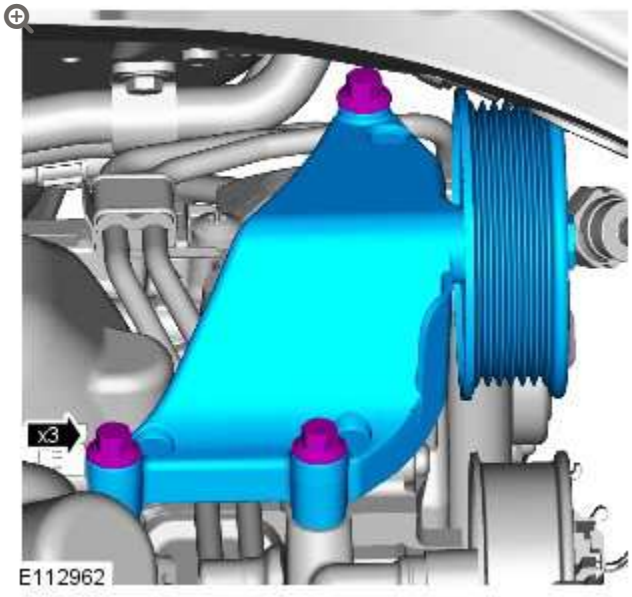

Torque: **25 Nm**

	Left-hand drive vehicles

15.

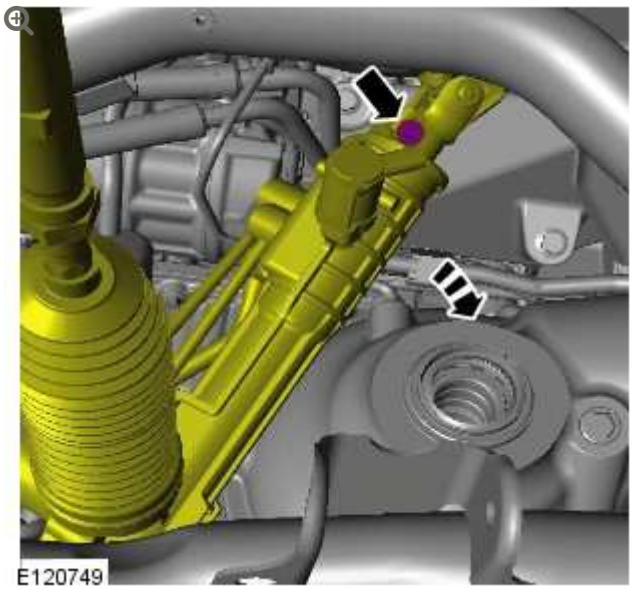

Torque: **24 Nm**

16.

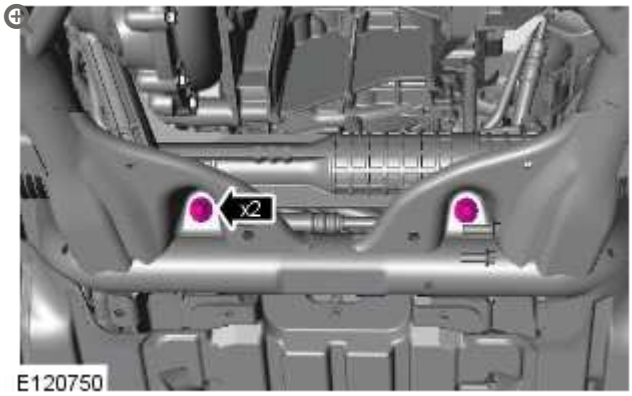

Torque: **100 Nm**

All vehicles

17. Refer to: Generator - V8 S/C 5.0L Petrol (414-02 Generator and Regulator - V8 5.0L Petrol/V8 S/C 5.0L Petrol, Removal and Installation).

18. Refer to: Engine Mount RH (303-01B Engine - V8 S/C 5.0L Petrol, Removal and Installation).

19. Lower the vehicle.

20.

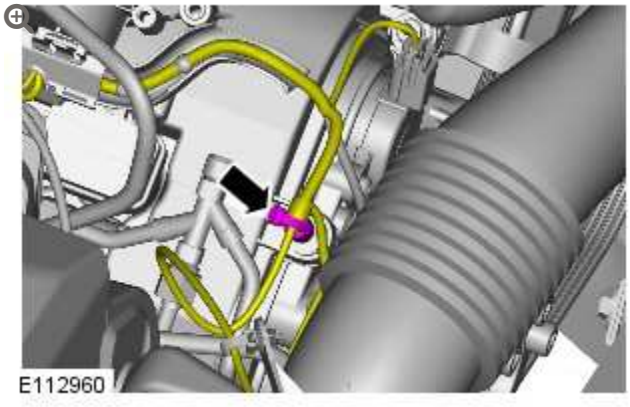

21.

NOTES:

- Do not tighten at this stage.
- Remove and discard the blanking caps.

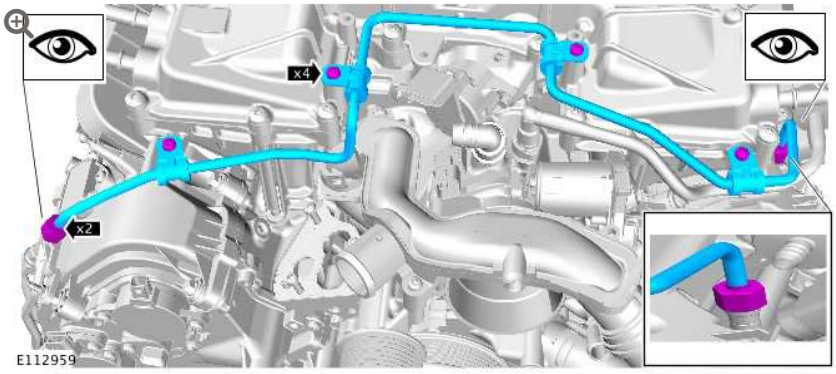

22.

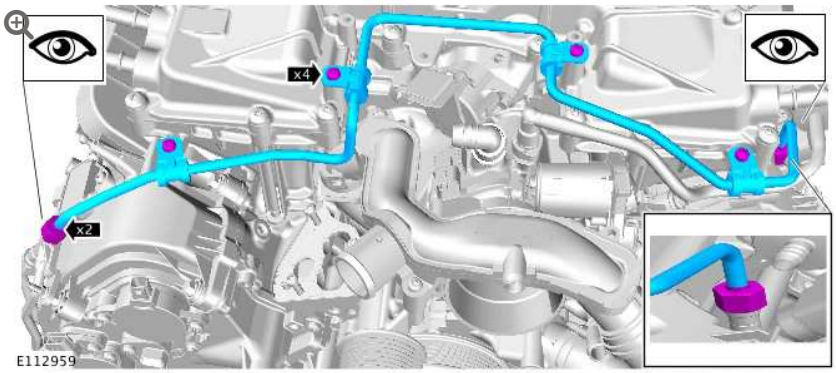

- *Torque:*

  Unions **21 Nm**

  Bolts **8 Nm**

23.

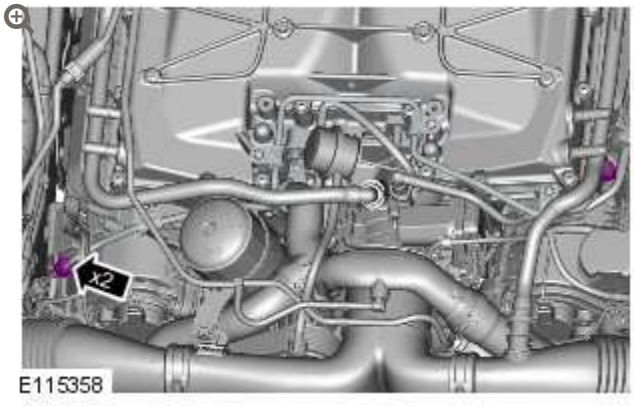

Torque: **21 Nm**

24.

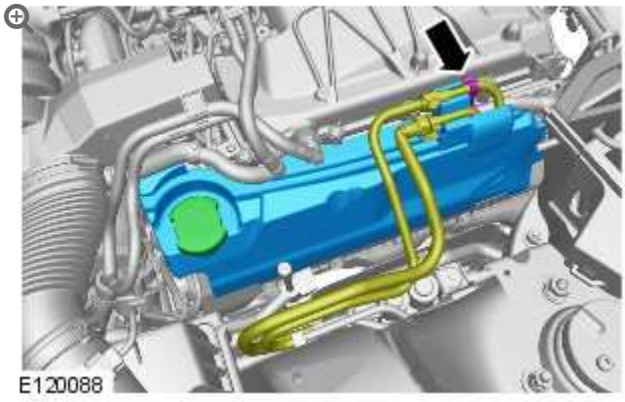

25.

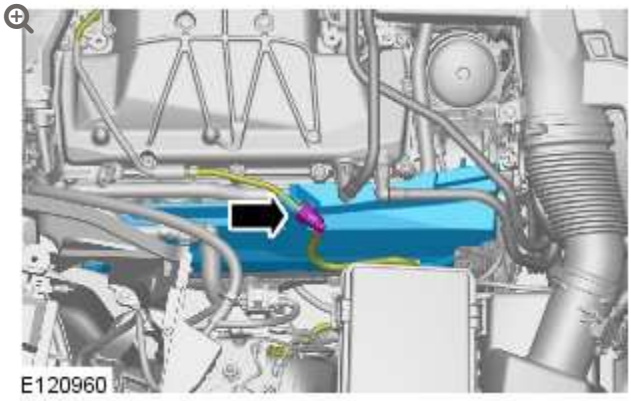

26.

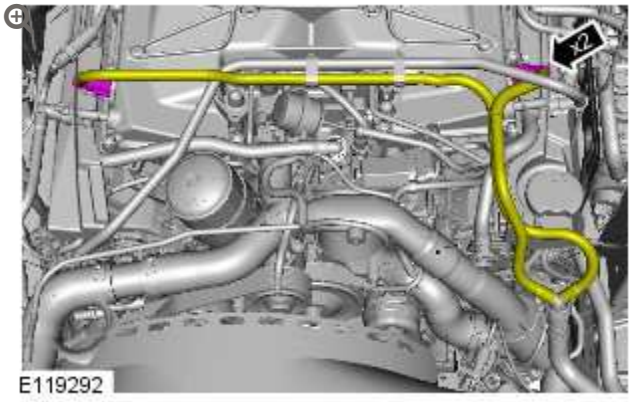

27.

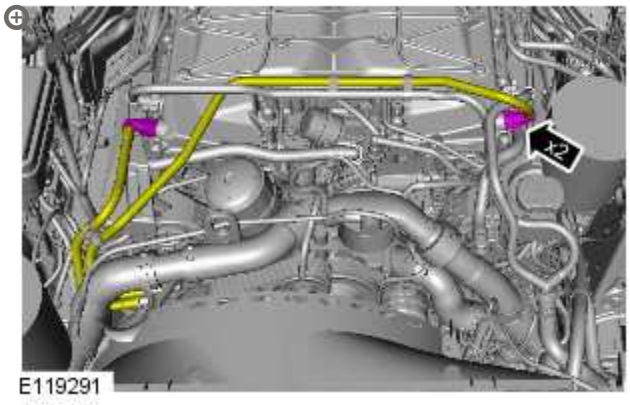

28. Refer to: Air Cleaner Outlet Pipe T-Connector (303-12B Intake Air Distribution and Filtering - V8 S/C 5.0L Petrol, Removal and Installation).

29.

Refer to: Engine Undershield (501-02 Front End Body Panels, Removal and Installation).

30. Connect the battery earth lead.
Refer to: Specifications (414-00 Battery and Charging System - General Information, Specifications).

31.
- Start the engine and allow to run for 10 minutes, stop the engine.
- Check for leaks.

32.

CAUTIONS:

- Make sure that the selector lever and the gearshift mechanism are in the park (P) position.
- Make sure that the hood is open.

- Turn the ignition on.

33.

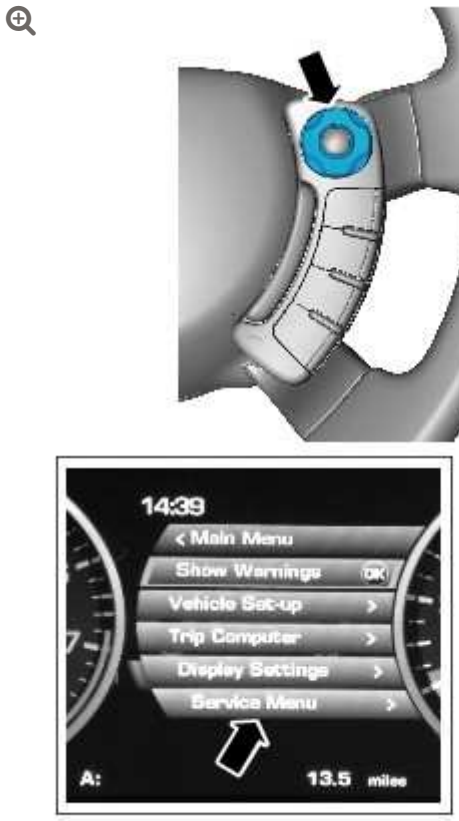

E122817

- Press the right-hand directional button to access the instrument cluster menu.

34.

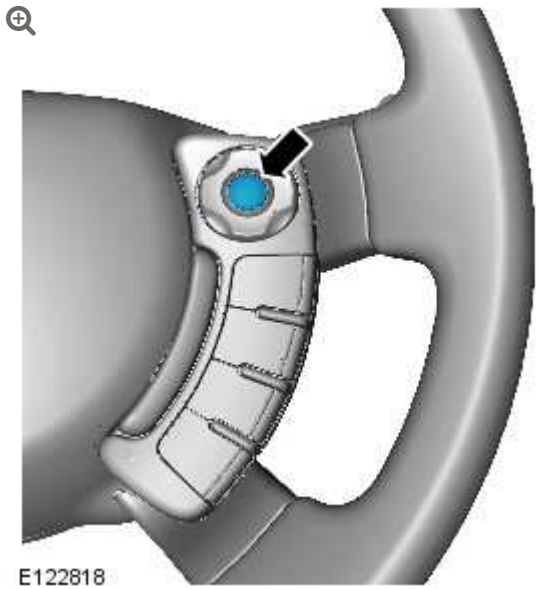

E122818

- Press the right-hand OK button.

35.

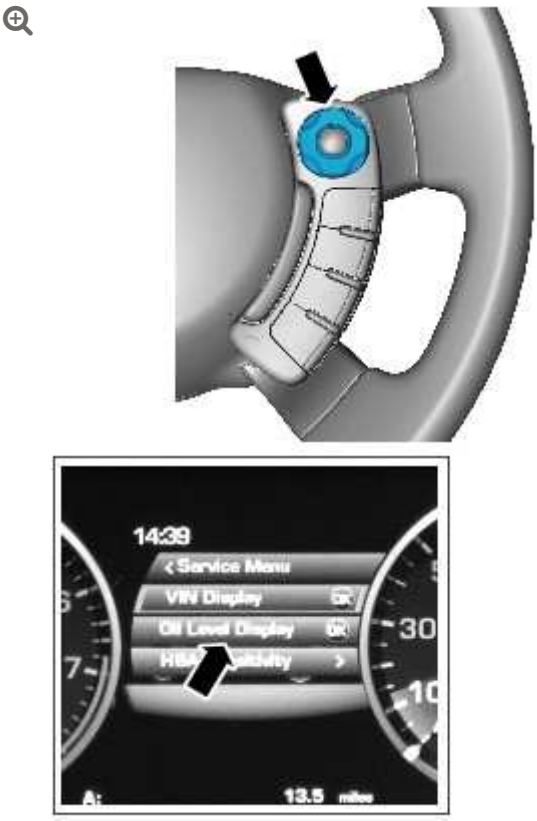

E122819

- Press the right-hand directional button to access the Oil Level Display.

36.



E122820

- Press the right-hand OK button and follow the instructions.

37.

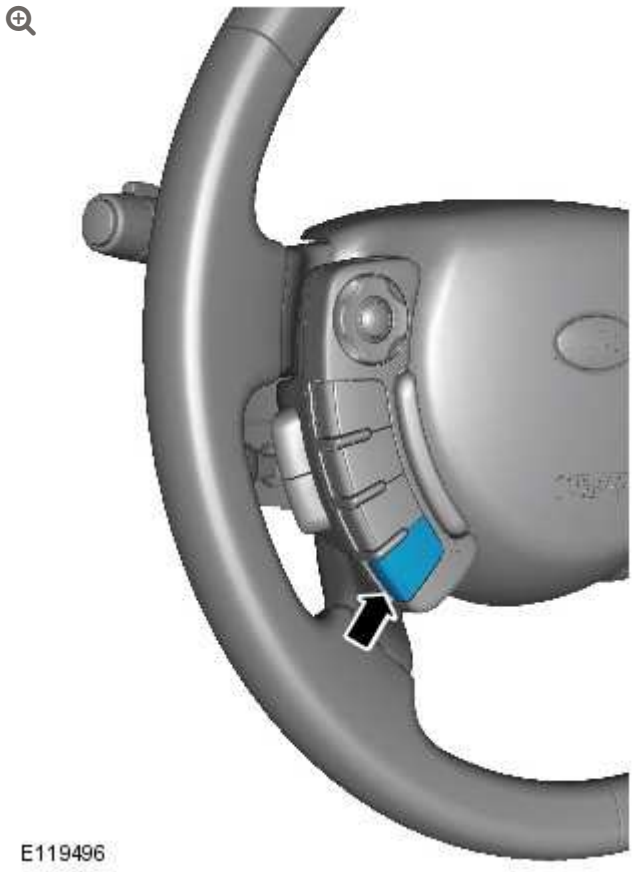

- Press the cruise control cancel button twice within 2 seconds.

38.



E122821

- The message center display will revert to the normal display in the trip computer.
- Press the right-hand OK button and follow the instructions.
- Check that the oil level display shows an oil level reading.
- Only after having started and run the engine for 10 minutes (as indicated in Step 31), switch off the engine, then stabilizing for 10 minutes, take a reading from the oil level display and, if necessary top up with engine oil.

39. Turn the ignition off.

40. Allow 10 minutes for the engine oil level to stabilize if there has been additional oil top up.

41. **NOTE:**

The following steps are to update the average oil level value.

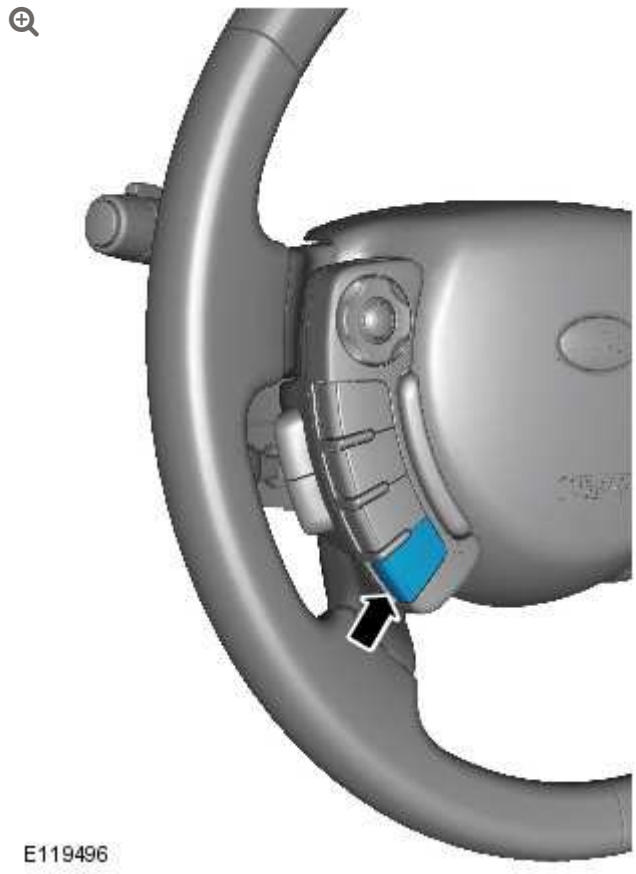

- Turn the ignition on.
- Press and hold the cruise control cancel button for more than 2 seconds.

42. - The message center display will revert to the normal display in the trip computer.

43. Turn the ignition off.

44. Turn the ignition on.

45.



E122817

- Press the right-hand directional button to access the instrument cluster menu.

46.

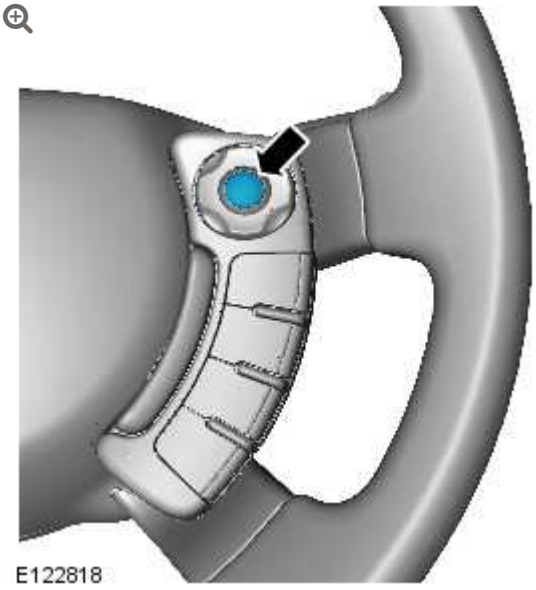

E122818

- Press the right-hand OK button.

47.

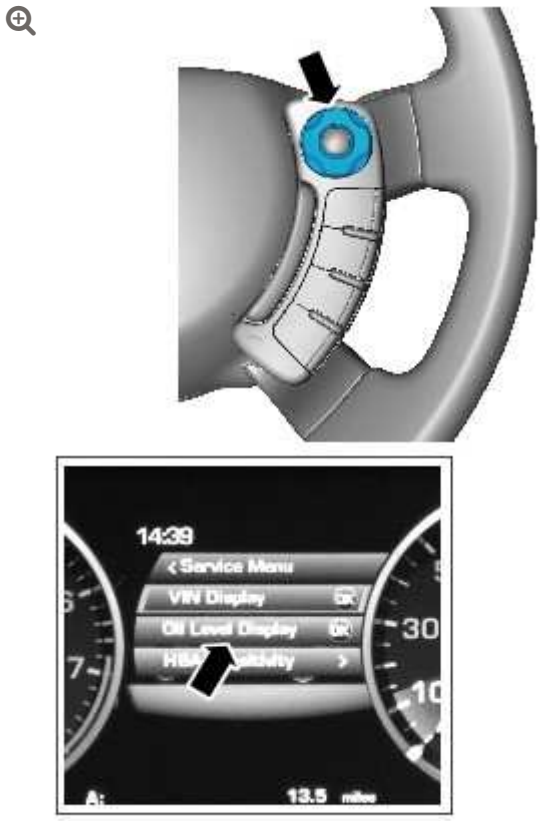

E122819

- Press the right-hand directional button to access the Oil Level Display.

48.



E122821

- Press the right-hand OK button and follow the instructions.
- Make sure that the average oil level value has now been updated.

49. Refer to: Engine Cover - V8 5.0L Petrol/V8 S/C 5.0L Petrol (501-05 Interior Trim and Ornamentation, Removal and Installation).

FUEL CHARGING AND CONTROLS – V8 S/C 5.0L PETROL

HIGH PRESSURE FUEL PUMP 2 (G1225238)

REMOVAL AND INSTALLATION

19.45.30	HIGH PRESSURE FUEL PUMP – FRONT – RENEW	5000 CC, AJ V8, SUPERCHARGED	4	USED WITHINS	+

REMOVAL

CAUTION:

Always carry out the cleaning process before carrying out any repairs to the fuel injection system components. Failure to follow this instruction may result in foreign matter ingress to the fuel injection system.

NOTES:

- Removal steps in this procedure may contain installation details.
- Some variation in the illustrations may occur, but the essential information is always correct.

1. Refer to: Petrol and Petrol-Ethanol Fuel Systems Health and Safety Precautions (100-00 General Information, Description and Operation).

2. Refer to: Fuel System Pressure Release - V8 5.0L Petrol/V8 S/C 5.0L Petrol (310-00 Fuel System - General Information, General Procedures).

3. Disconnect the battery ground cable.
   Refer to: Specifications (414-00 Battery and Charging System - General Information, Specifications).

4. **WARNING:**

   Do not work on or under a vehicle supported only by a jack. Always support the vehicle on safety stands.

   Raise and support the vehicle.

5. Refer to: Engine Undershield (501-02 Front End Body Panels, Removal and Installation).

6. Refer to: Fuel Injection Component Cleaning (303-04B Fuel Charging and Controls - V8 S/C 5.0L Petrol, General Procedures).

7. Refer to: Air Cleaner Outlet Pipe T-Connector (303-12B Intake Air Distribution and Filtering - V8 S/C 5.0L Petrol, Removal and Installation).

8. **CAUTION:**

Be prepared to collect escaping coolant.

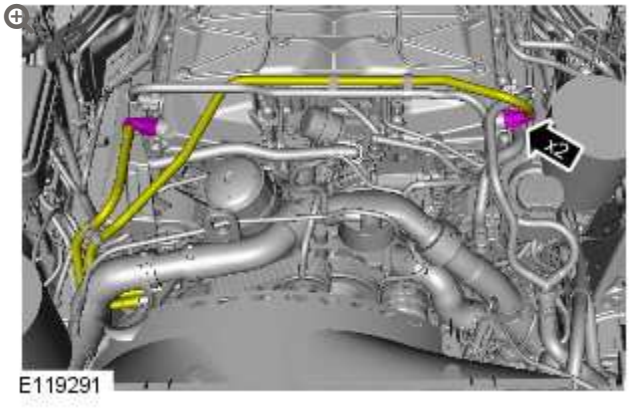

9. **WARNING:**

Be prepared to collect escaping fluids.

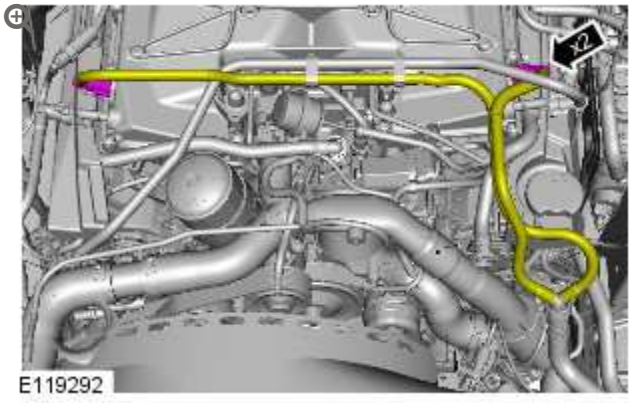

10.

CAUTION:

Be prepared to collect escaping fluids.

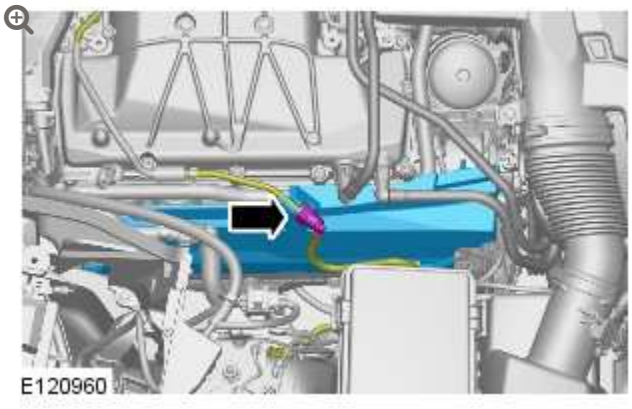

11.

CAUTION:

Be prepared to collect escaping fluids.

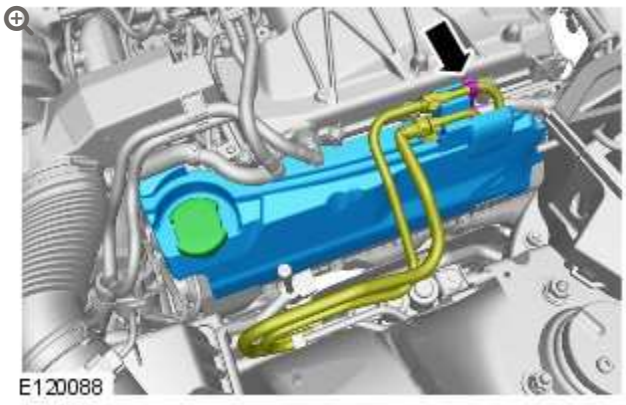

12.

CAUTION:

Be prepared to collect escaping fluids.

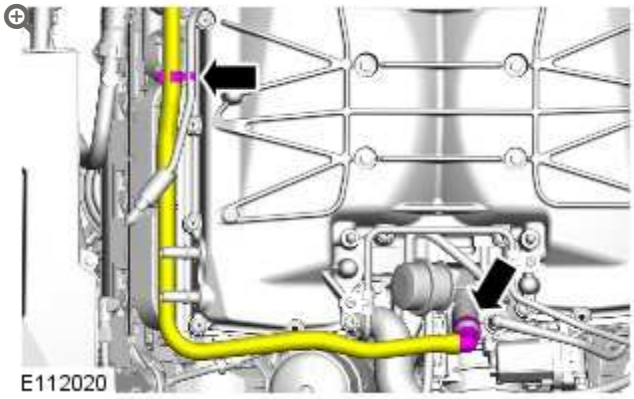

13.

CAUTIONS:

- Be prepared to collect escaping fluids.
- Make sure that all openings are sealed. Use new blanking caps.

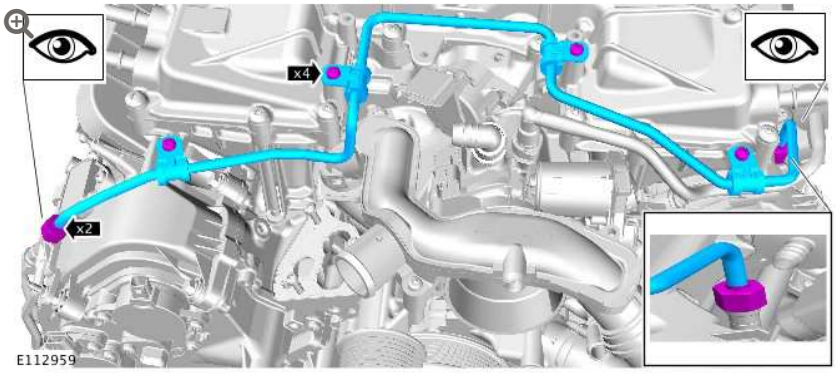

14.

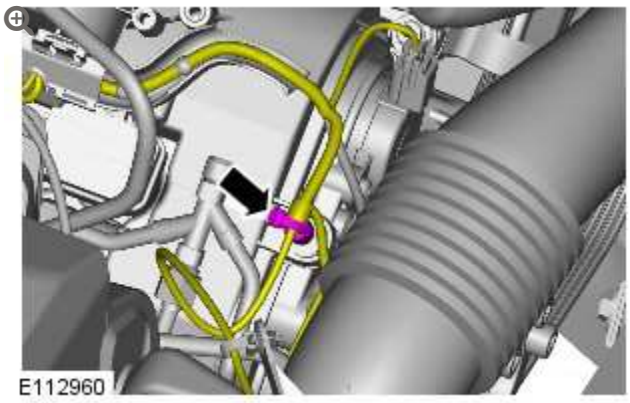

15.

CAUTIONS:

- Be prepared to collect escaping fluids.
- Make sure that all openings are sealed. Use new blanking caps.

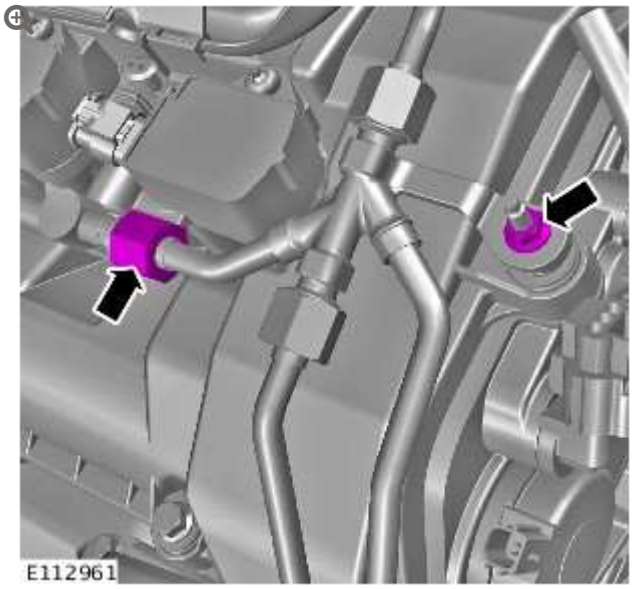

16.

WARNING:

Make sure to support the vehicle with axle stands.

Raise and support the vehicle.

17. Refer to: Engine Mount RH (303-01B Engine - V8 S/C 5.0L Petrol, Removal and Installation).

18. Refer to: Generator - V8 S/C 5.0L Petrol (414-02 Generator and Regulator - V8 5.0L Petrol/V8 S/C 5.0L Petrol, Removal and Installation).

19. 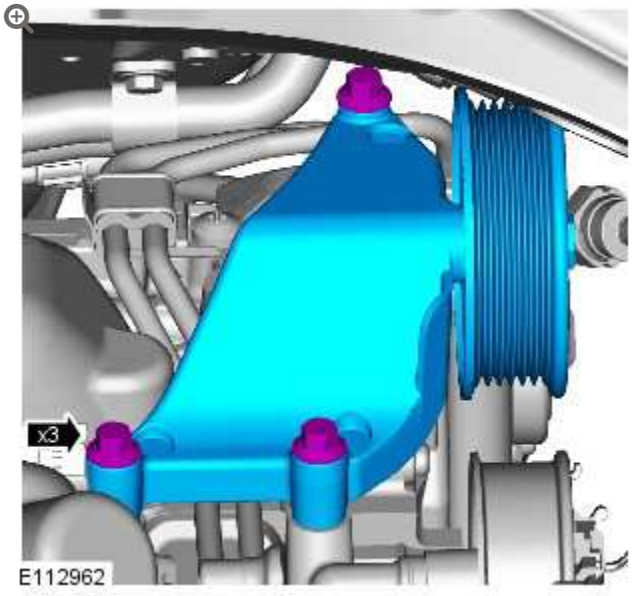

20. **NOTE:**

Engine shown removed for clarity.

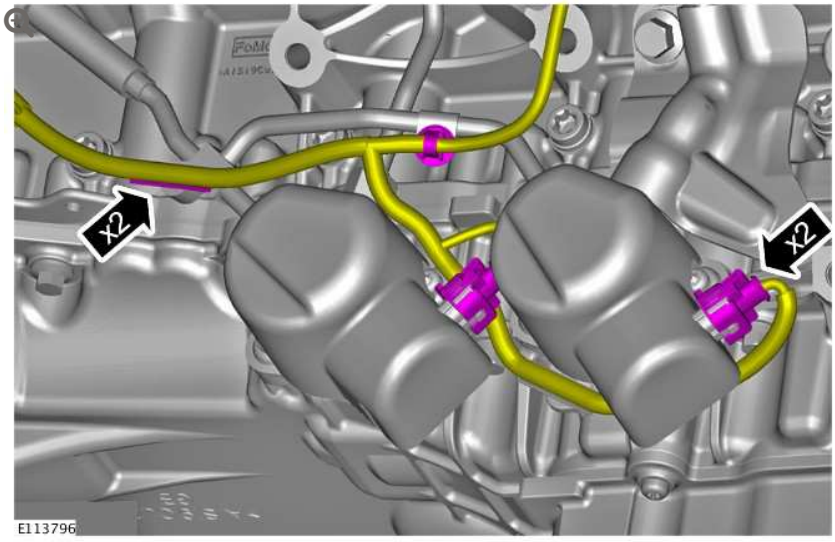

21.

CAUTIONS:

- Be prepared to collect escaping fluids.
- Make sure that all openings are sealed. Use new blanking caps.
- Remove and discard the high-pressure fuel supply lines.

NOTE:

Engine shown removed for clarity.

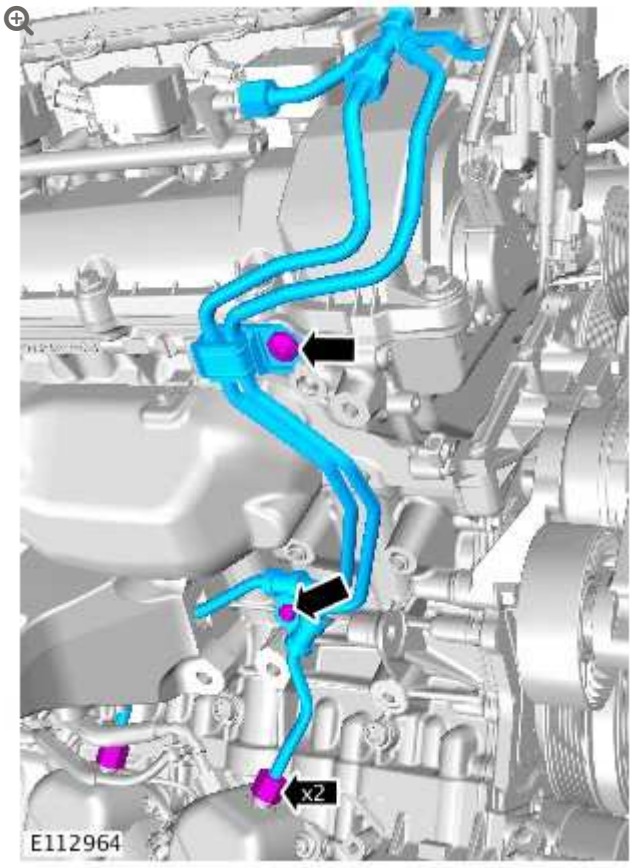

22.

CAUTIONS:

- Be prepared to collect escaping fluids.
- Make sure that all openings are sealed. Use new blanking caps.

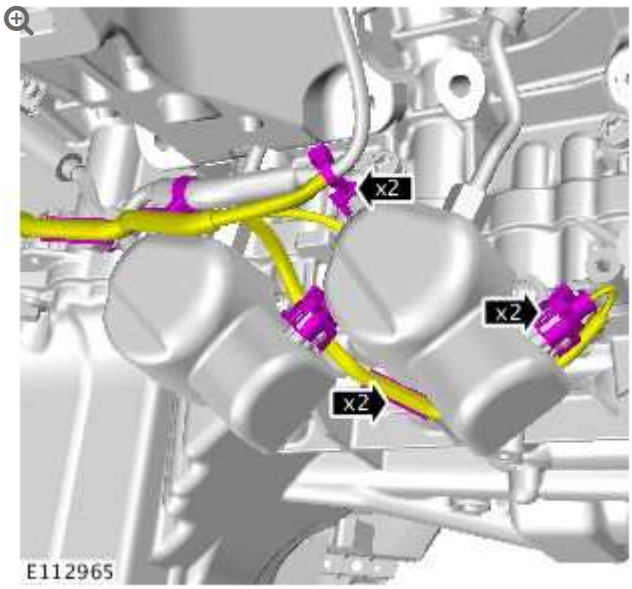

23.

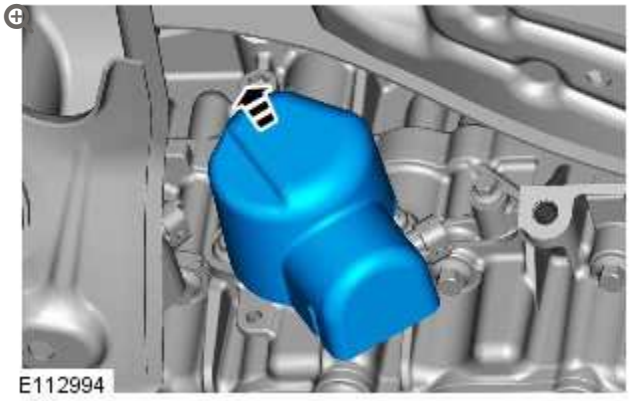

24.

CAUTION:

Be prepared to collect escaping fluids.

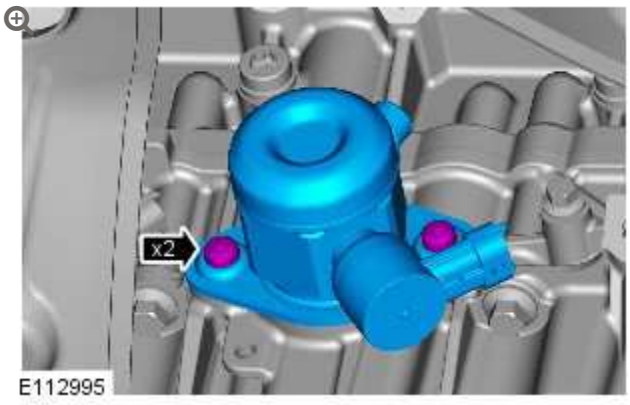

Loosen the Torx screws a turn each at a time.

25.

CAUTION:

Be prepared to collect escaping fluids.



INSTALLATION

1.

NOTE:

Lubricate the fuel rail high-pressure fuel pump bucket with clean engine oil.



2.

CAUTION:

Tighten the Torx screws a turn at a time until the correct torque is achieved.

NOTE:

Lubricate the fuel rail high-pressure fuel pump O-ring seal with clean engine oil.

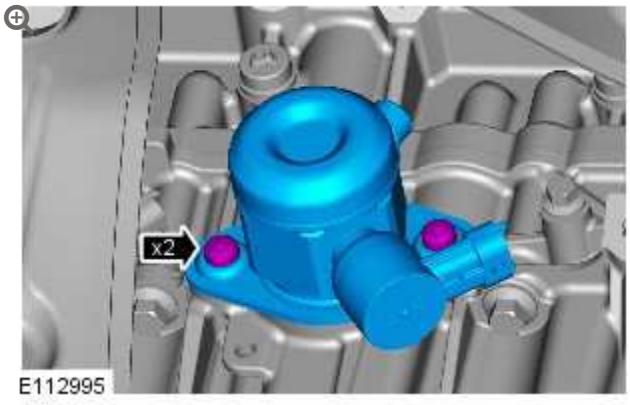

Torque: **11 Nm**

3.

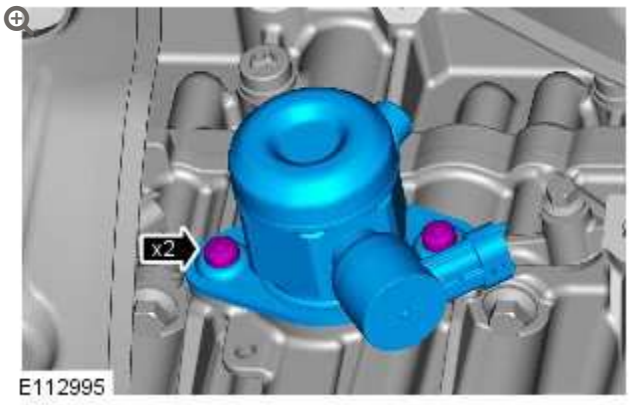

Loosen the Torx screws half a turn each.

4.

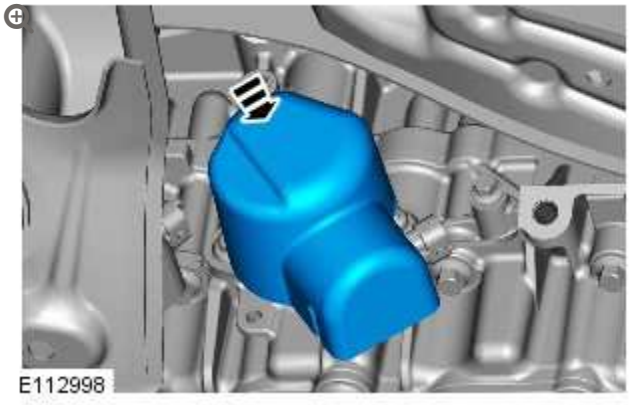

5.

CAUTIONS:

- Install new high-pressure fuel supply lines.
- Lubricate only the union threads with clean engine oil.

NOTES:

- Remove and discard the blanking caps.
- Engine shown removed for clarity.
- Install the bolt and unions fully finger tight before final tightening.

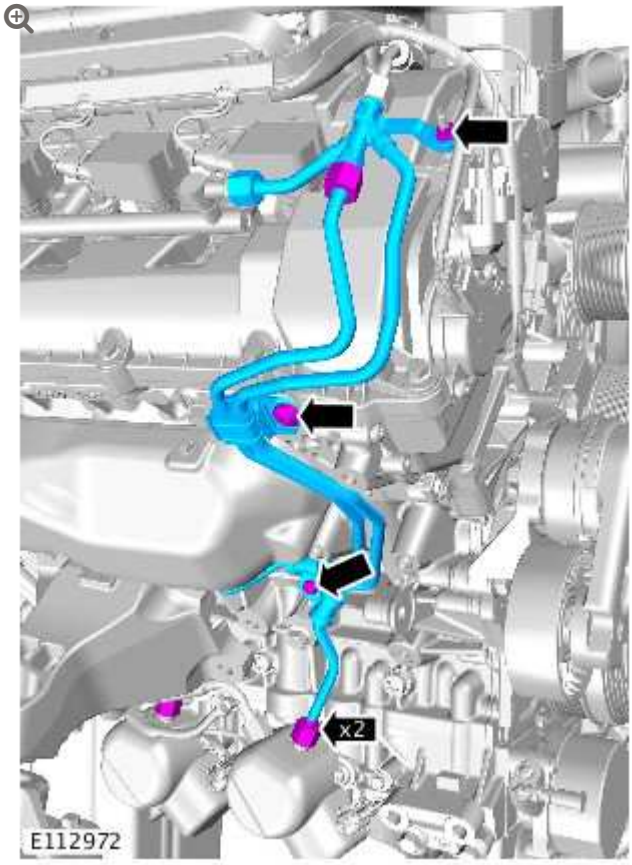

6.

CAUTION:

Care must be taken when positioning the fuel rail high-pressure fuel pump cover to one side.

NOTE:

Fuel rail high-pressure fuel pump cover shown removed for clarity.

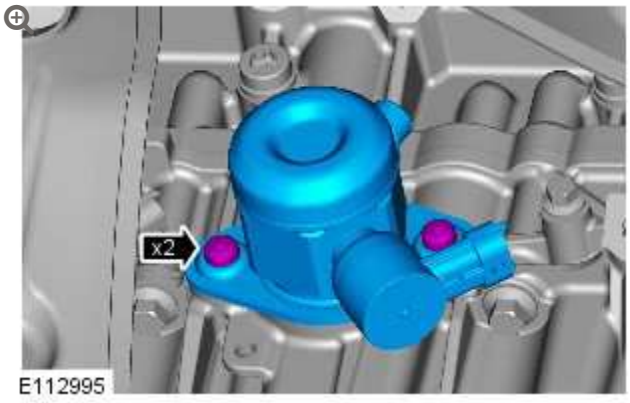

Torque: **11 Nm**

7. Lower the vehicle.

8. **NOTES:**

- Do not tighten at this stage.
- Remove and discard the blanking caps.

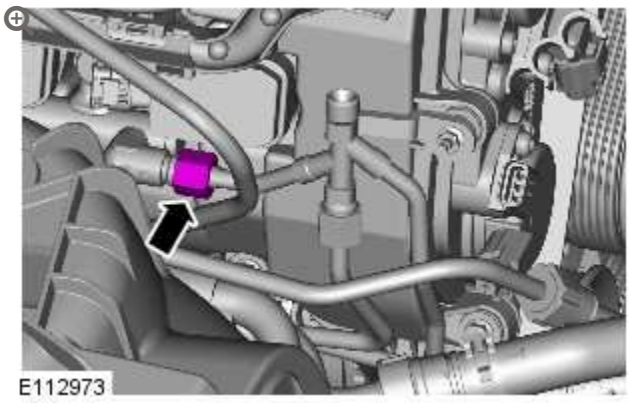

9. **WARNING:**

> Do not work on or under a vehicle supported only by a jack. Always support the vehicle on safety stands.

Raise and support the vehicle.

10. **NOTE:**

> Engine shown removed for clarity.

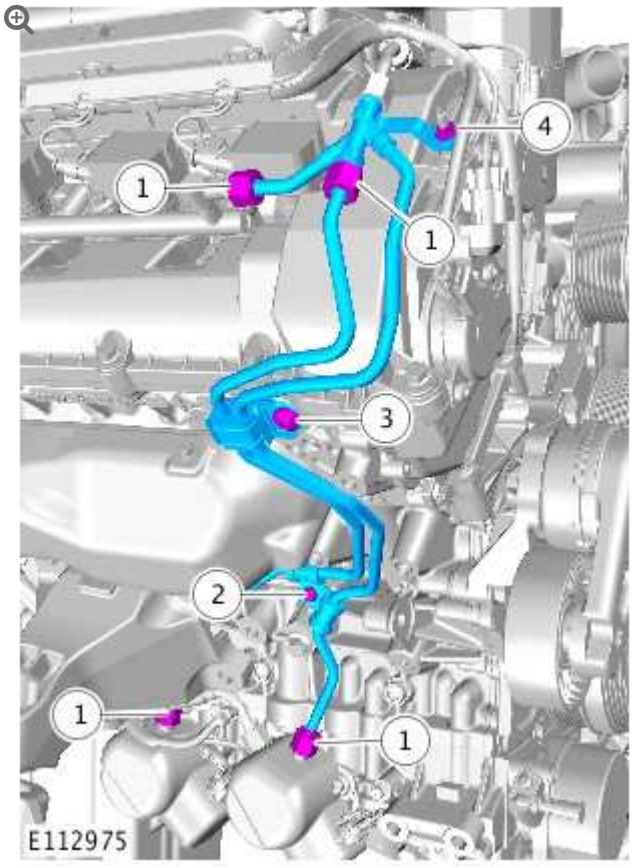

Torque:

Unions (1) **21 Nm**

M6 (2) **11 Nm**

M8 (3) **25 Nm**

M5 nut (4) **6 Nm**

11. **NOTE:**

Engine shown removed for clarity.

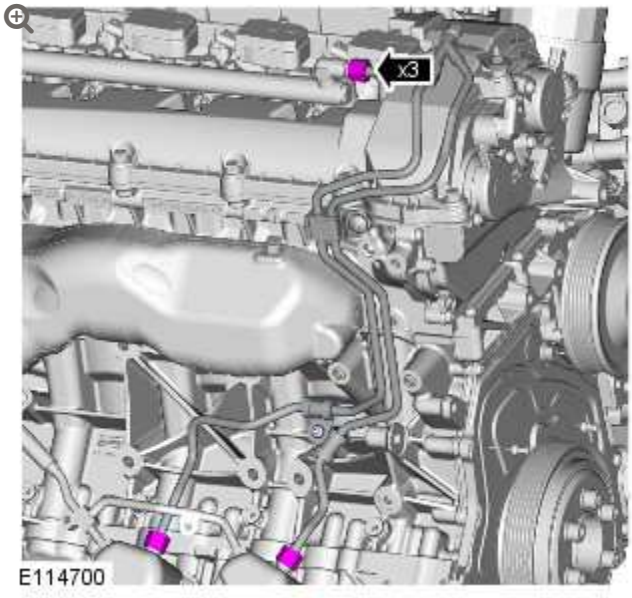

Torque: **21 Nm**

12. **NOTES:**

- Install the bolt and unions finger tight before final tightening.
- Remove and discard the blanking caps.

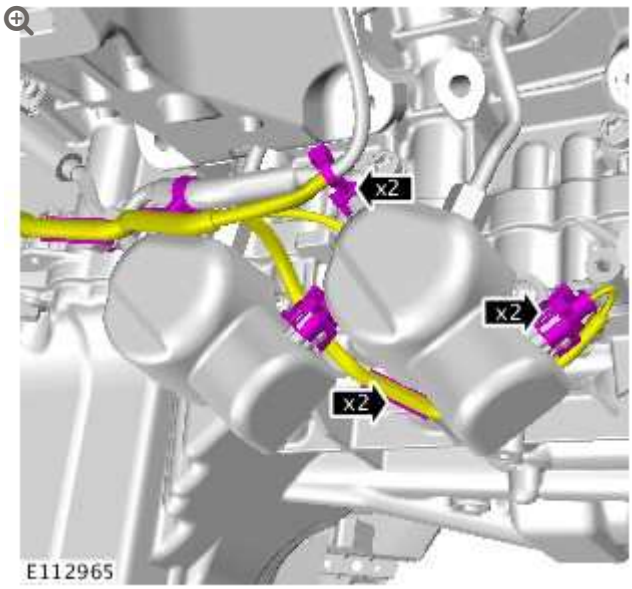

Torque:

Unions **21 Nm**

M6 **11 Nm**

13.

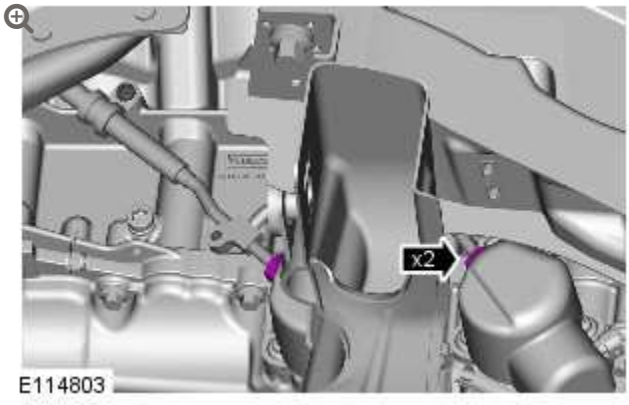

Torque: **21 Nm**

14.

NOTE:

Engine shown removed for clarity.

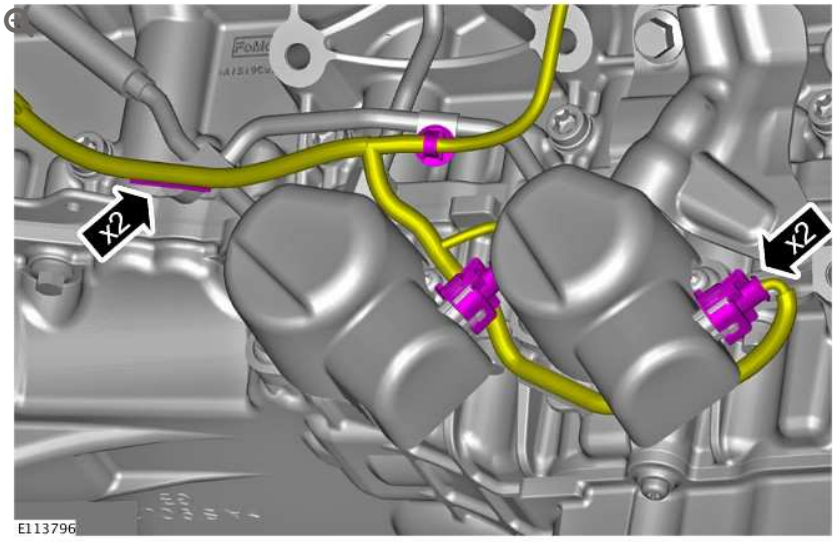

15.

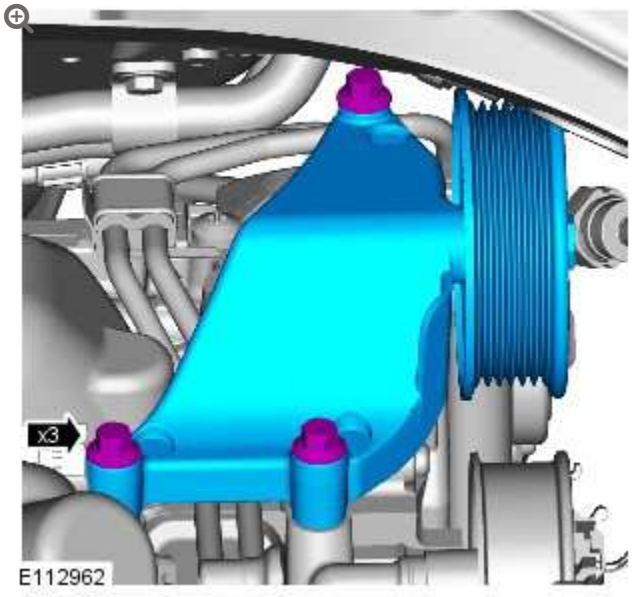

Torque: **25 Nm**

16. Refer to: Generator - V8 S/C 5.0L Petrol (414-02 Generator and Regulator - V8 5.0L Petrol/V8 S/C 5.0L Petrol, Removal and Installation).

17. Refer to: Engine Mount RH (303-01B Engine - V8 S/C 5.0L Petrol, Removal and Installation).

18. Lower the vehicle.

19.

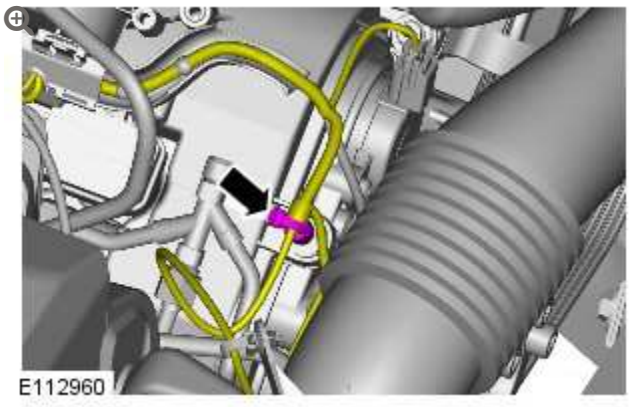

20.

CAUTION:

Lubricate only the union threads with clean engine oil.

NOTES:

- Do not tighten at this stage.
- Remove and discard the blanking caps.

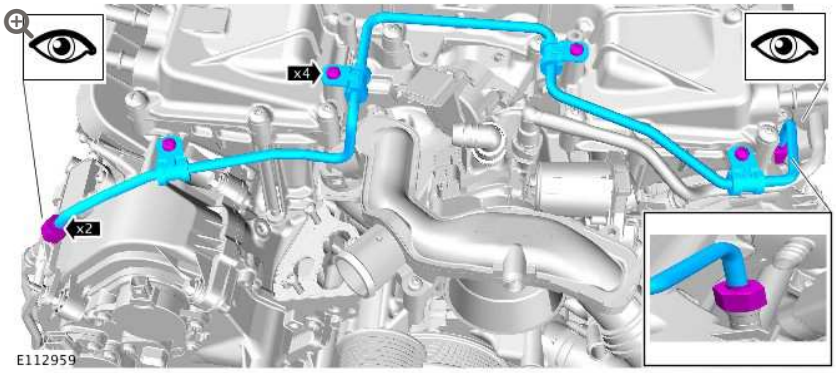

21.

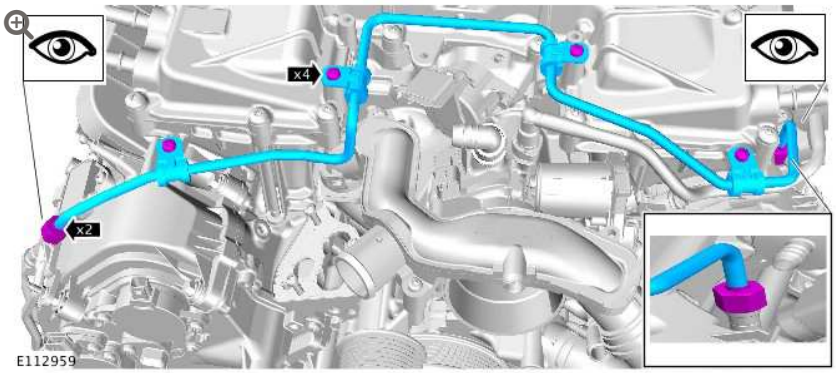

Torque:

Unions **21 Nm**

Bolts **8 Nm**

22.

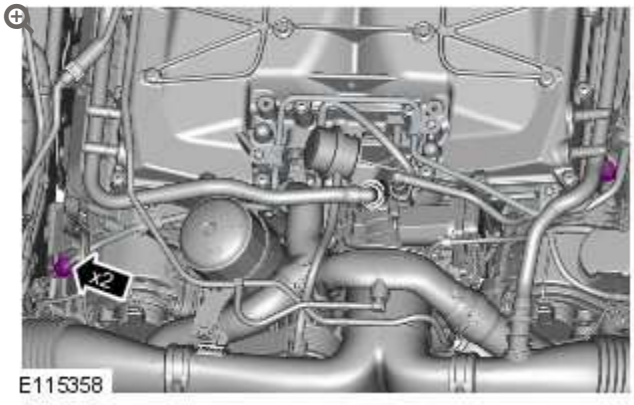

Torque: **21 Nm**

23.

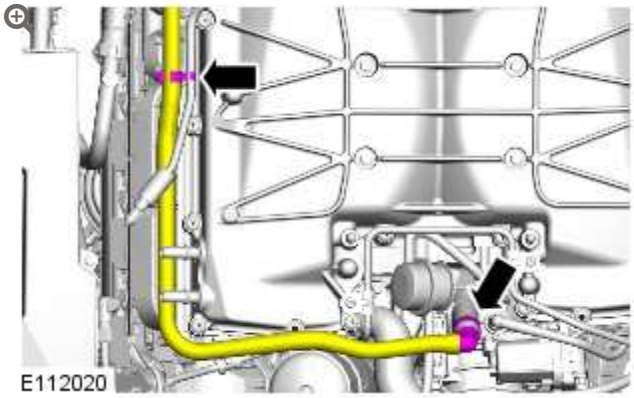

24.

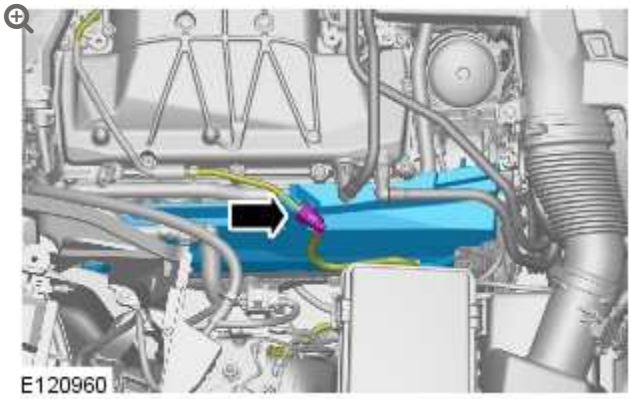

25.

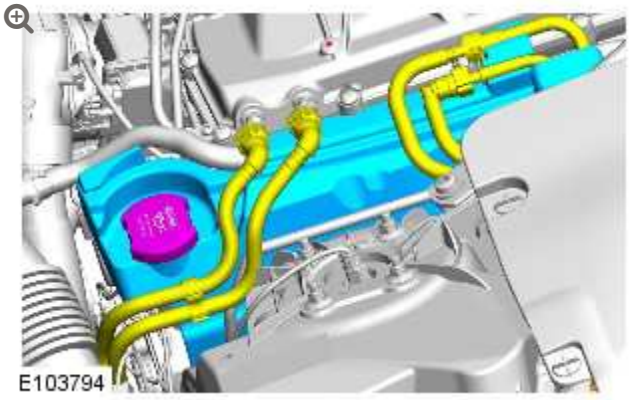

26.

CAUTION:

Be prepared to collect escaping coolant.

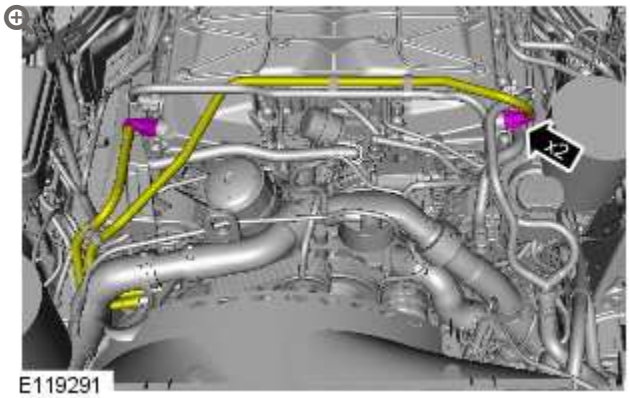

27.

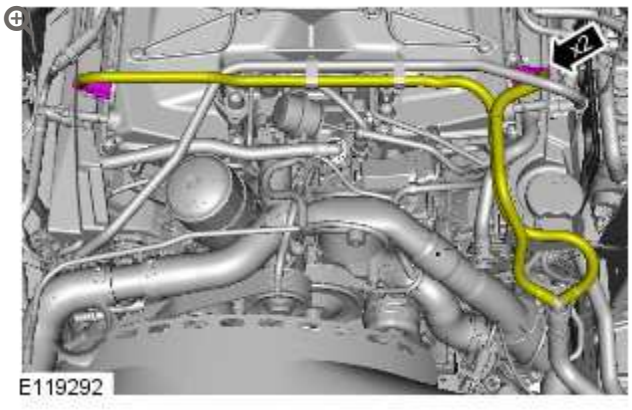

28. Refer to: Air Cleaner Outlet Pipe T-Connector (303-12B Intake Air Distribution and Filtering - V8 S/C 5.0L Petrol, Removal and Installation).

29. Refer to: Engine Undershield (501-02 Front End Body Panels, Removal and Installation).

30. Connect the battery earth lead.
Refer to: Specifications (414-00 Battery and Charging System - General Information, Specifications).

31.
- Start the engine and allow to run for 10 minutes, stop the engine.
- Check for leaks.

32. **CAUTIONS:**

- Make sure that the selector lever and the gearshift mechanism are in the park (P) position.
- Make sure that the hood is open.

- Turn the ignition on.

33.

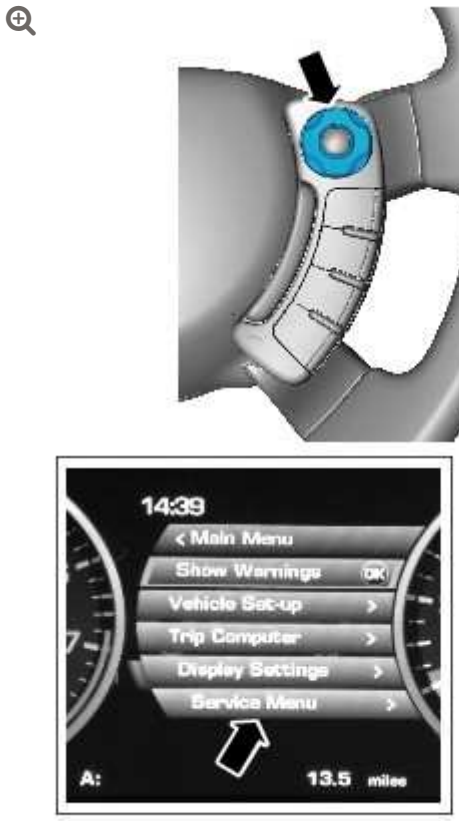

E122817

- Press the right-hand directional button to access the instrument cluster menu.

34.

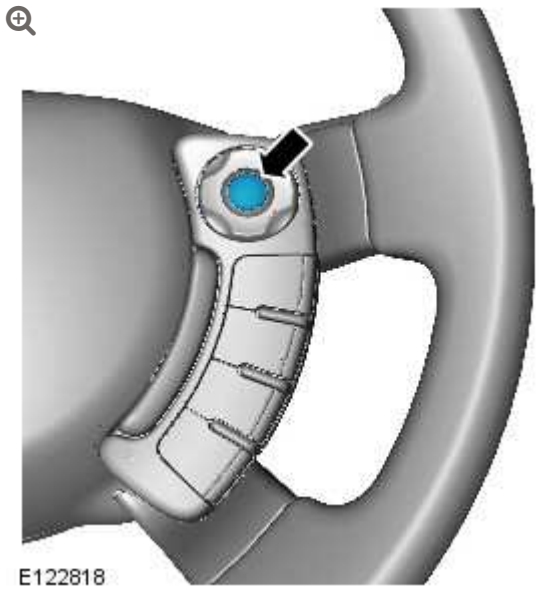

E122818

- Press the right-hand OK button.

35.

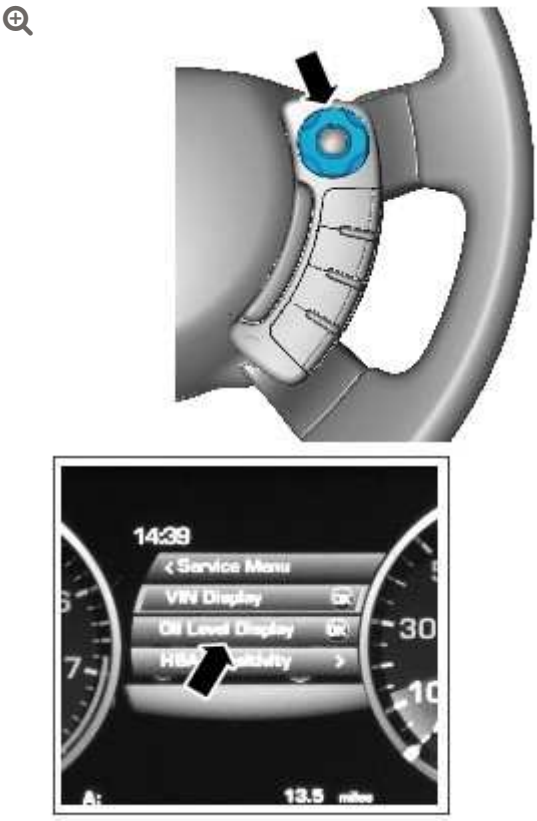

E122819

- Press the right-hand directional button to access the Oil Level Display.

36.



E122820

- Press the right-hand OK button and follow the instructions.

37.

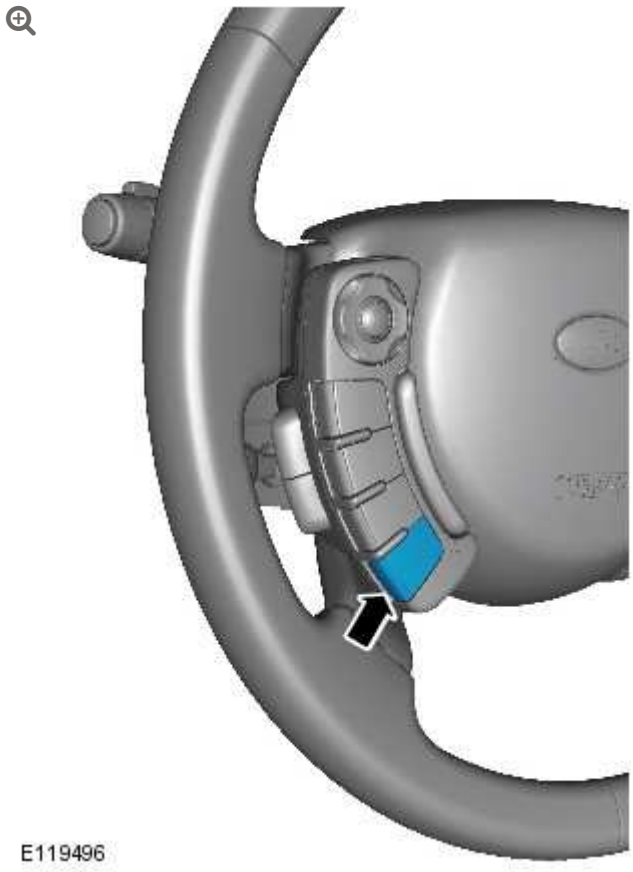

- Press the cruise control cancel button twice within 2 seconds.

38.



E122821

- The message center display will revert to the normal display in the trip computer.
- Press the right-hand OK button and follow the instructions.
- Check that the oil level display shows an oil level reading.
- Only after having started and run the engine for 10 minutes (as indicated in Step 31), switch off the engine, then stabilizing for 10 minutes, take a reading from the oil level display and, if necessary top up with engine oil.

39. Turn the ignition off.

40. Allow 10 minutes for the engine oil level to stabilize if there has been additional oil top up.

41. **NOTE:**

The following steps are to update the average oil level value.

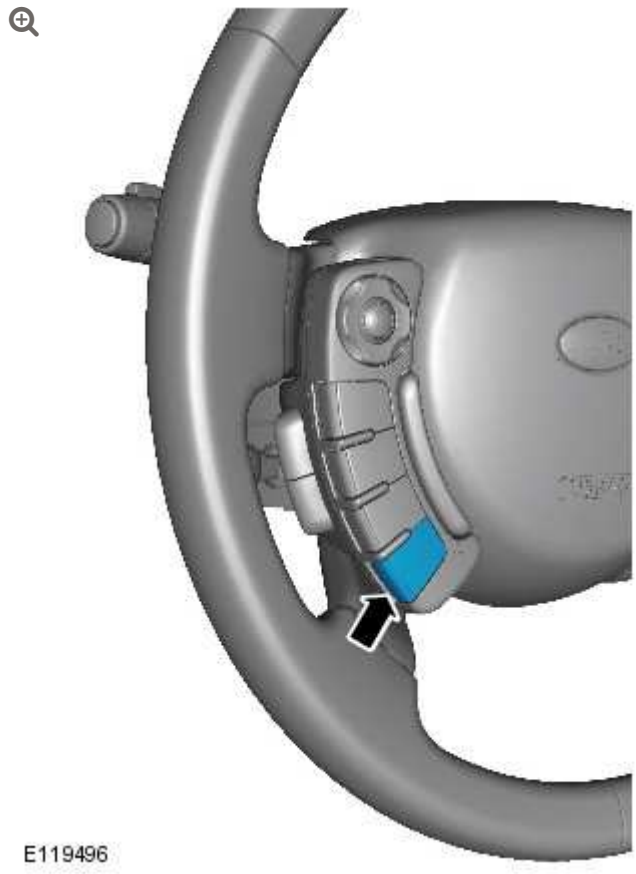

- Turn the ignition on.
- Press and hold the cruise control cancel button for more than 2 seconds.

42. - The message center display will revert to the normal display in the trip computer.

43. Turn the ignition off.

44. Turn the ignition on.

45.



E122817

- Press the right-hand directional button to access the instrument cluster menu.

46.

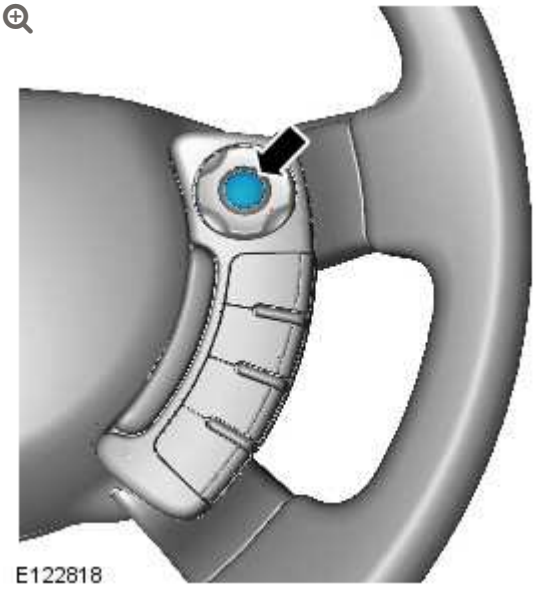

E122818

- Press the right-hand OK button.

47.

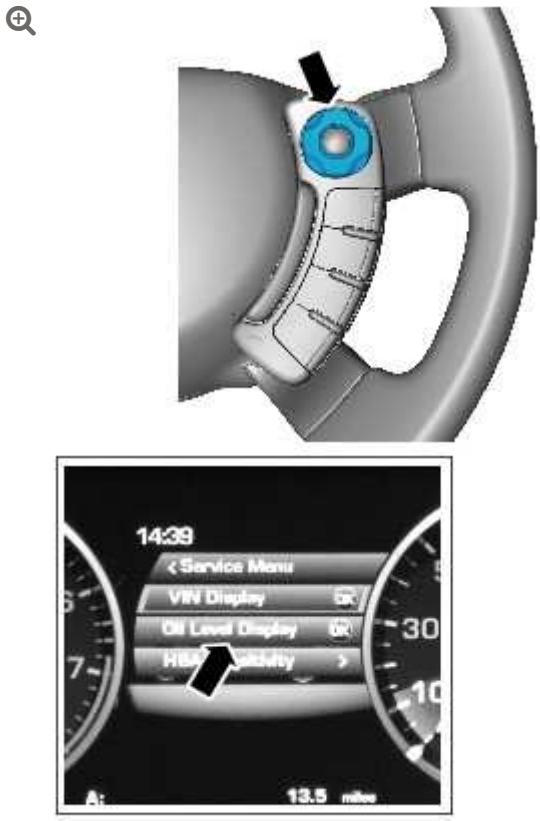

E122819

- Press the right-hand directional button to access the Oil Level Display.

48.



E122821

- Press the right-hand OK button and follow the instructions.
- Make sure that the average oil level value has now been updated.

49. Refer to: Engine Cover - V8 5.0L Petrol/V8 S/C 5.0L Petrol (501-05 Interior Trim and Ornamentation, Removal and Installation).

FUEL CHARGING AND CONTROLS - V8 S/C 5.0L PETROL

THROTTLE BODY (G1224058)

REMOVAL AND INSTALLATION

19.22.45	THROTTLE BODY - RENEW	5000 CC, AJ V8, SUPERCHARGED	1.3	USED WITHINS	+

REMOVAL

NOTE:

Removal steps in this procedure may contain installation details.

1. Disconnect the battery ground cable.
   Refer to: Specifications (414-00 Battery and Charging System - General Information, Specifications).

2. **WARNING:**

   Make sure to support the vehicle with axle stands.

   Raise and support the vehicle.

3. Refer to: Engine Cover - V8 5.0L Petrol/V8 S/C 5.0L Petrol (501-05 Interior Trim and Ornamentation, Removal and Installation).

4. Refer to: Cooling System Partial Draining and Vacuum Filling (303-03B, General Procedures).

5. Refer to: Air Cleaner Outlet Pipe T-Connector (303-12B Intake Air Distribution and Filtering - V8 S/C 5.0L Petrol, Removal and Installation).

6. 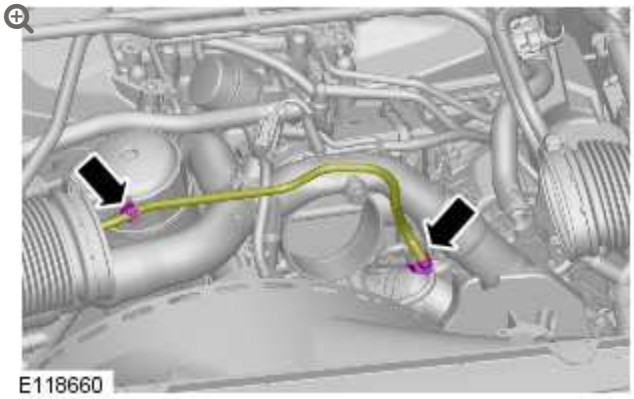

7. 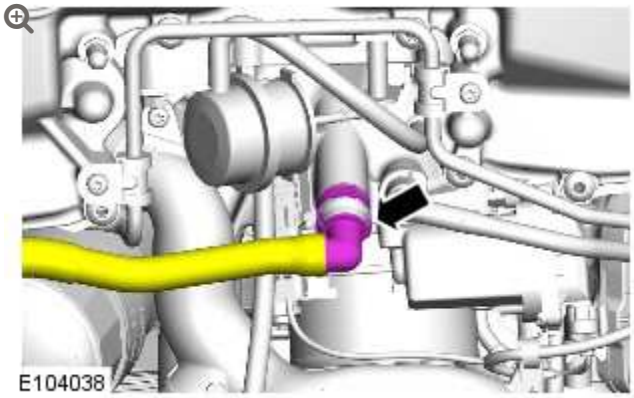

8.

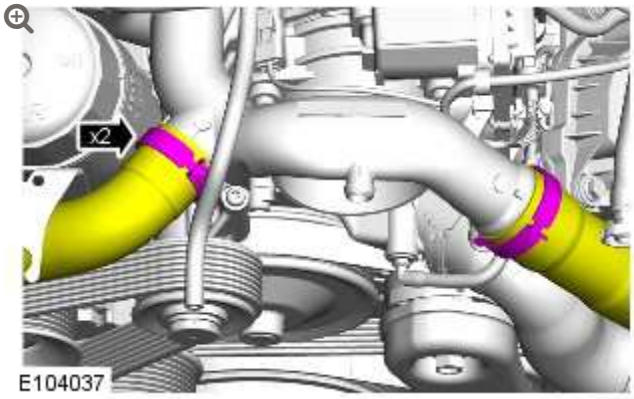

9.

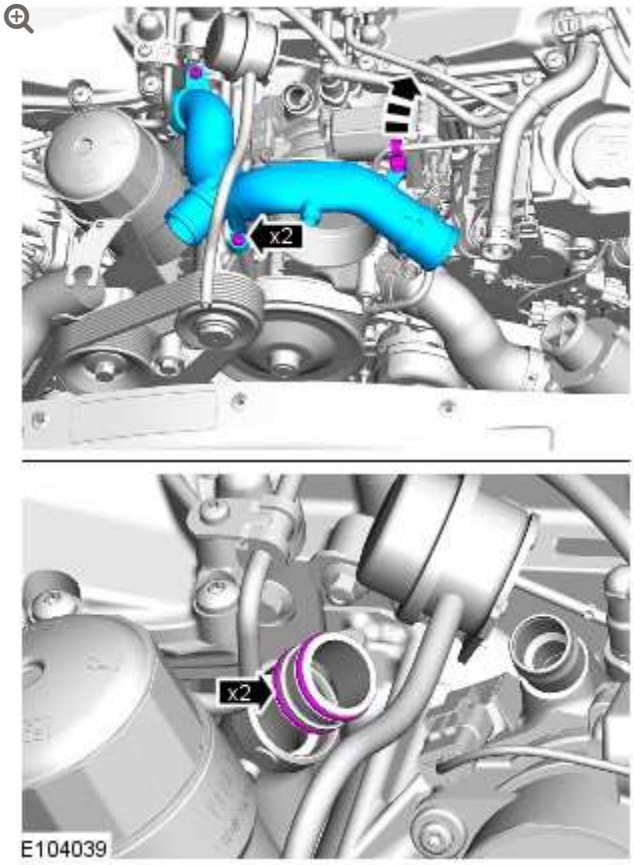

Torque: **10 Nm**

10.

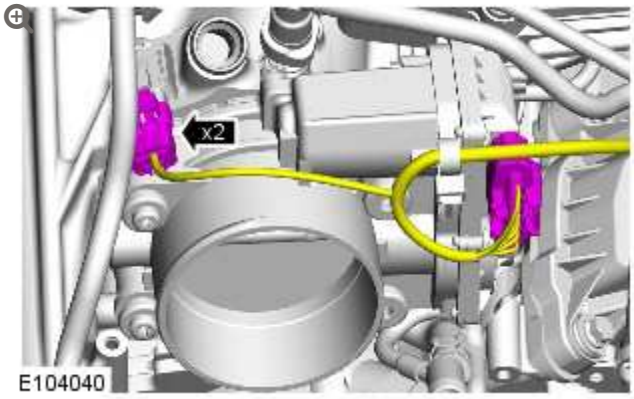

11.

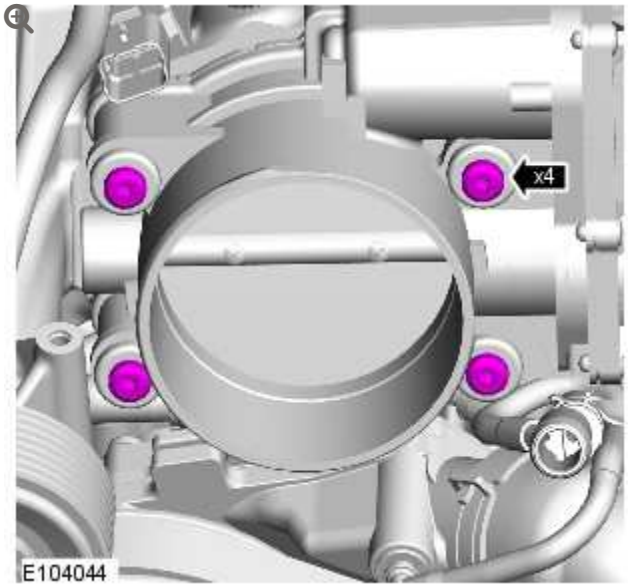

Torque: **10 Nm**

12.

CAUTIONS:

- Do not attempt to clean the throttle body bore, build up of deposits reduces air leakage past the throttle plate at the fully closed position.
- Take extra care when removing the throttle body, failure to follow this instruction may result in damage to the manifold absolute pressure (MAP) sensor.

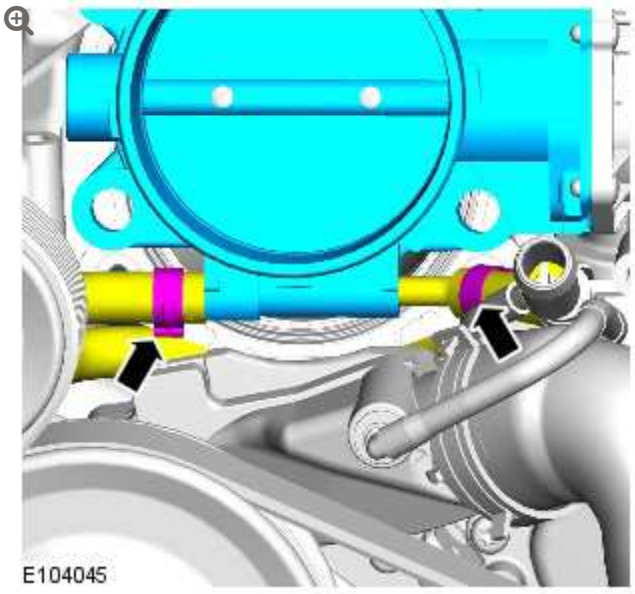

- Remove and discard the gasket.
- Install a new gasket.
- Clean the components mating faces.

INSTALLATION

1. To install, reverse the removal procedure.
2. Using the approved diagnostic equipment, clear the powertrain control module (PCM) adaptions.

ACCESSORY DRIVE – V8 5.0L PETROL/V8 S/C 5.0L PETROL

SPECIFICATIONS

DESCRIPTION	NM	LB-FT	LB-IN
Accessory drive belt tensioner retaining bolt	47	35	-
Accessory drive belt idler pulley retaining bolt - all vehicles	47	35	-
Accessory drive belt center idler pulley retaining bolt - vehicles without supercharger	47	35	-
Accessory drive belt idler pulley retaining bolt to tensioner bracket - vehicles with supercharger	47	35	-
Supercharger belt tensioner bracket retaining bolt	25	19	-
Supercharger belt tensioner retaining bolt	47	35	-
Supercharger belt idler pulley retaining bolt	47	35	-
Cooling fan pulley retaining bolts	25	19	
Cooling fan retaining nut	65	48	

ACCESSORY DRIVE – V8 5.0L PETROL/V8 S/C 5.0L PETROL

DIAGNOSIS AND TESTING

PRINCIPLES OF OPERATION

For a detailed description of the Accessory Drive Belts, refer to the relevant Description and Operation section in the workshop manual. REFER to: Accessory Drive Belt - V8 S/C 5.0L Petrol (303-05 Accessory Drive - V8 5.0L Petrol/V8 S/C 5.0L Petrol, Removal and Installation).

INSPECTION AND VERIFICATION

CAUTION:

Diagnosis by substitution from a donor vehicle is **NOT** acceptable. Substitution of control modules does not guarantee confirmation of a fault, and may also cause additional faults in the vehicle being tested and/or the donor vehicle.

NOTES:

- If a control module or a component is suspect and the vehicle remains under manufacturer warranty, refer to the Warranty Policy and Procedures manual, or determine if any prior approval programme is in operation, prior to the installation of a new module/component.
- When performing voltage or resistance tests, always use a digital multimeter accurate to three decimal places, and with an up-to-date calibration certificate. When testing resistance always take the resistance of the digital multimeter leads into account.
- Check and rectify basic faults before beginning diagnostic routines involving pinpoint tests.

1. Verify the customer concern

2. Visually inspect for obvious signs of damage and system integrity

Visual Inspection

MECHANICAL
▪ Accessory drive belt ▪ Belt tensioner ▪ Idler pulley ▪ Generator ▪ Coolant pump ▪ Air conditioning compressor ▪ Torsional vibration damper

3.

If an obvious cause for an observed or reported concern is found, correct the cause (if possible) before proceeding to the next step

4. If the cause is not visually evident, verify the symptom and refer to the Symptom Chart, alternatively check for Diagnostic Trouble Codes (DTCs) and refer to the DTC Index

5. Check DDW for open campaigns. Refer to the corresponding bulletins and SSMs which may be valid for the specific customer complaint and carry out the recommendations as required

SYMPTOM CHART

CAUTION:

If the engine is run without the drive belt(s) connected to eliminate driven components, diagnostic trouble codes, (DTCs) may be set which must be cleared before the vehicle is returned to the owner. The engine should not be run for more than 2-3 minutes with the belts disconnected. Failure to follow this instruction may result in damage to the vehicle

SYMPTOM	POSSIBLE CAUSES	ACTION
Noise	▪ Accessory drive belt condition and tension ▪ Pulleys misaligned ▪ Driven components (including tensioners)	▪ Check the integrity of the accessory drive belt. Rectify as necessary ▪ Check the alignment of the accessory drive belt pulleys. Rectify as necessary ▪ Check the integrity of the driven components. Rectify as necessary
	▪ Accessory drive belt wear	

SYMPTOM	POSSIBLE CAUSES	ACTION
Accessory drive belt does not hold tension	▪ Belt tensioner failure	▪ Check the integrity of the accessory drive belt. Rectify as necessary ▪ Check the integrity of the belt tensioner. Rectify as necessary

DTC INDEX

For a list of Diagnostic Trouble Codes (DTCs) that could be logged on this vehicle, please refer to Section 100-00. REFER to: Diagnostic Trouble Code (DTC) Index - V8 5.0L Petrol/V8 S/C 5.0L Petrol (100-00 General Information, Description and Operation).

2012.0 RANGE ROVER (LM), 303-05

ACCESSORY DRIVE – V8 5.0L PETROL/V8 S/C 5.0L PETROL

DESCRIPTION AND OPERATION

COMPONENT LOCATION – NATURALLY ASPIRATED VEHICLES

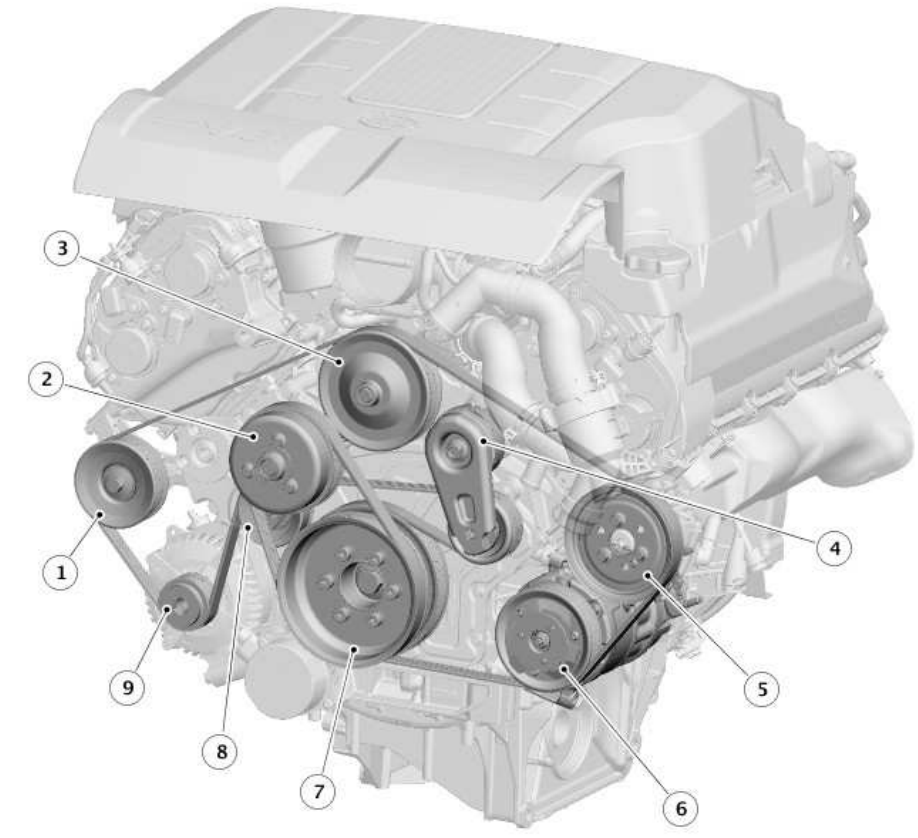

E121125

ITEM	DESCRIPTION
1	Idler pulley
2	Viscous cooling fan pulley
3	Coolant pump
4	Belt tensioner
5	Power steering pump
6	A/C (air conditioning) compressor
7	Crankshaft pulley/torsional vibration damper
8	Idler pulley
9	Generator

COMPONENT LOCATION – SUPERCHARGED VEHICLES

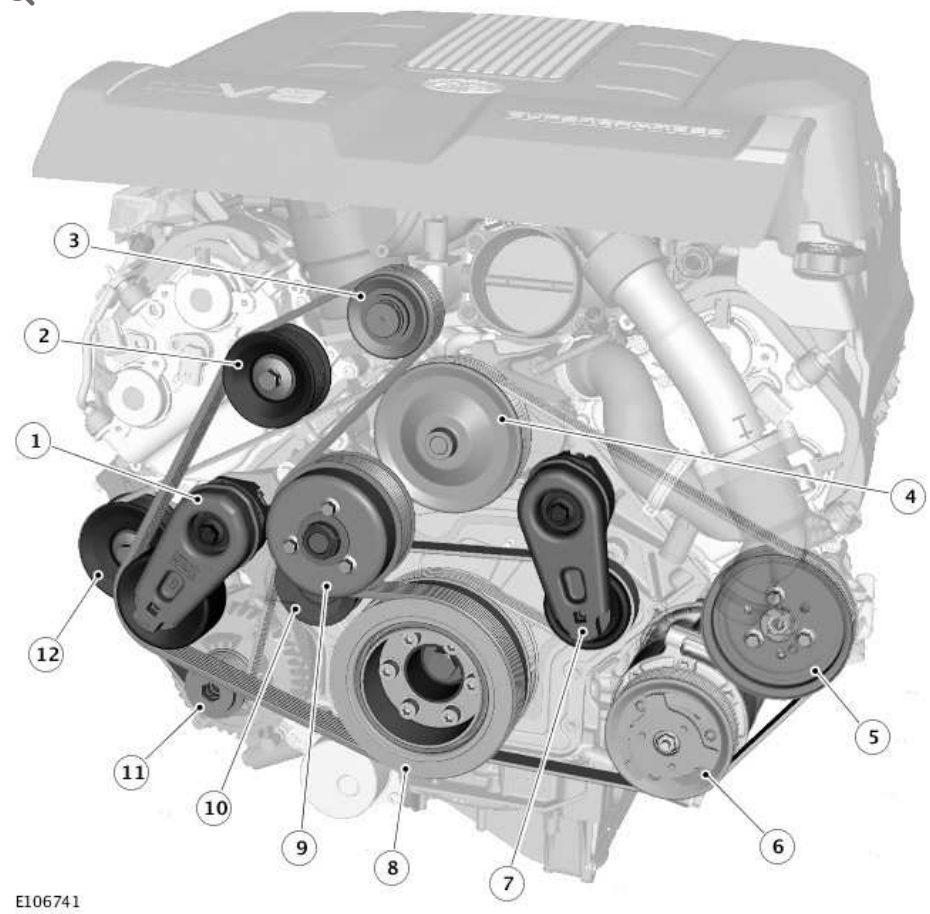

ITEM	DESCRIPTION
1	Secondary belt tensioner
2	Idler pulley
3	Supercharger
4	Coolant pump
5	Power steering pump
6	A/C compressor
7	Primary belt tensioner
8	Crankshaft pulley/torsional vibration damper
9	Viscous cooling fan pulley

ITEM	DESCRIPTION
10	Idler pulley
11	Generator
12	Idler pulley

INTRODUCTION

The accessory drive is a belt system powered by a pulley attached to the front of the crankshaft. The crankshaft pulley, which incorporates a torsional vibration damper, drives primary and secondary drive belts. An automatic belt tensioner in each belt run maintains the drive belts at the correct tension. Together with idler pulleys, the belt tensioners also guide the drive belts clear of obstructions and set the correct 'wrap-around' of the accessory component drive pulleys to ensure a slip-free drive.

PRIMARY DRIVE BELT

The primary drive belt is a six-ribbed poly-V belt that drives the:

- Coolant pump
- Power steering pump
- A/C (air conditioning) compressor
- Generator.

SECONDARY DRIVE BELT

The secondary drive belt is an eight-ribbed poly-V belt that drives the pulley of the viscous cooling fan. On SC (supercharger) vehicles, the secondary drive belt also drives the SC.

BELT TENSIONERS

Each belt tensioner consists of an idler pulley on the end of a spring loaded pivot arm. The pivot arm can be turned for removal and installation of the belt.

Each belt tensioner is calibrated to automatically maintain the correct tension in the related drive belt.

ACCESSORY DRIVE – V8 5.0L PETROL/V8 S/C 5.0L PETROL

ACCESSORY DRIVE BELT – V8 S/C 5.0L PETROL

(G1226053)

REMOVAL AND INSTALLATION

86.10.03	DRIVE BELT - GENERATOR - RENEW	5000 CC, AJ V8, SUPERCHARGED	1	USED WITHINS +

SPECIAL TOOL(S)



303-1142

Viscous Coupling Wrench



303-1143

Viscous Coupling Holding Tool

REMOVAL

NOTES:

- Some variation in the illustrations may occur, but the essential information is always correct.
- Removal steps in this procedure may contain installation details.

1. Disconnect the battery ground cable.
   Refer to: Specifications (414-00, Specifications).

2. **WARNING:**

   Make sure to support the vehicle with axle stands.

   Raise and support the vehicle.

3. Refer to: Supercharger Belt (303-05, Removal and Installation).

4.

CAUTION:

Always protect the cooling pack elements to prevent accidental damage.

NOTES:

- The thread is right handed.
- Some variation in the illustrations may occur, but the essential information is always correct.

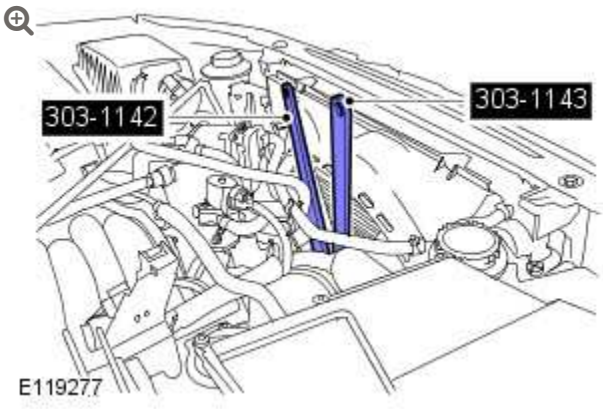

- *Special Tool(s):* 303-1142
- *Special Tool(s):* 303-1143

5.

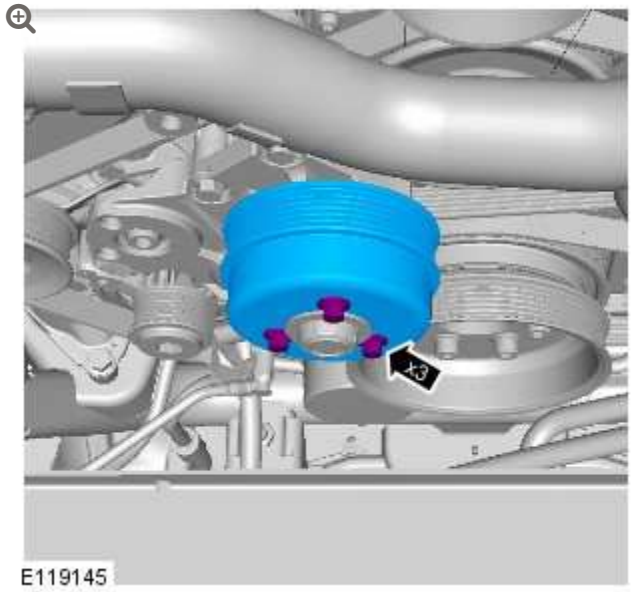

6.

NOTE:

Note the fitted position.

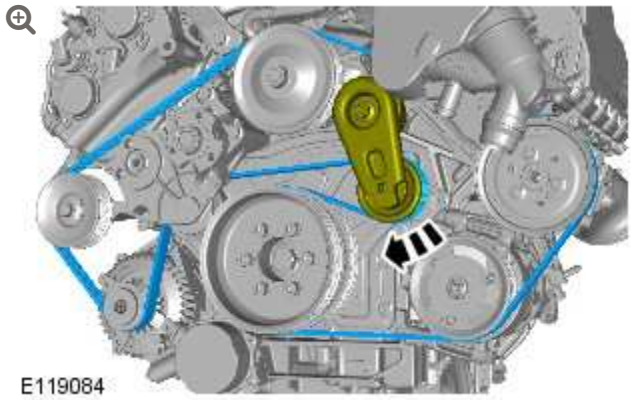

7.



INSTALLATION

1.



Torque: **25 Nm**

2. **NOTE:**

Note the fitted position.

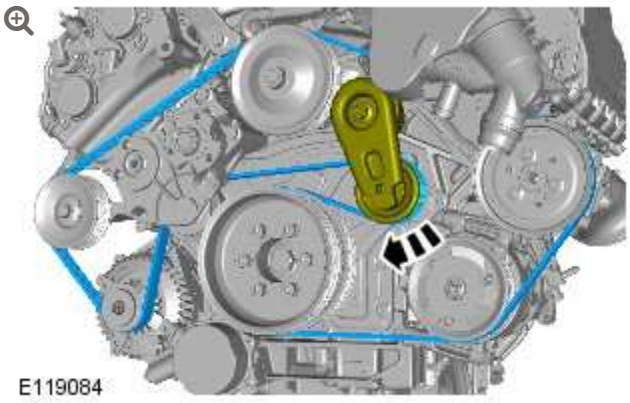

3.

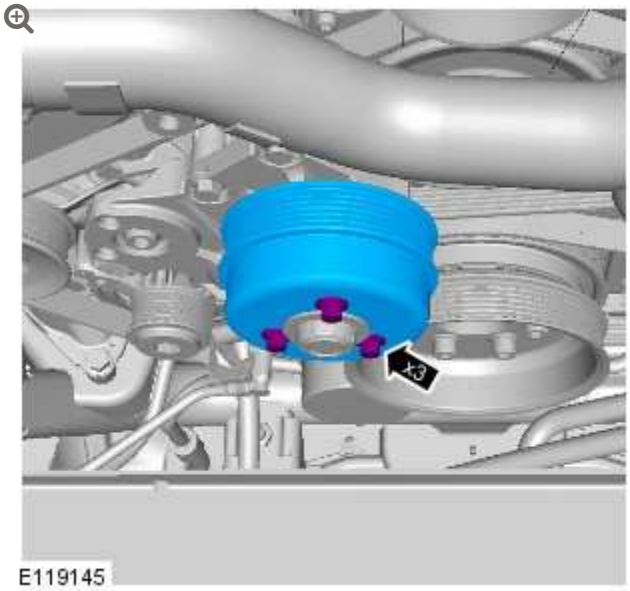

Torque: **25 Nm**

4.

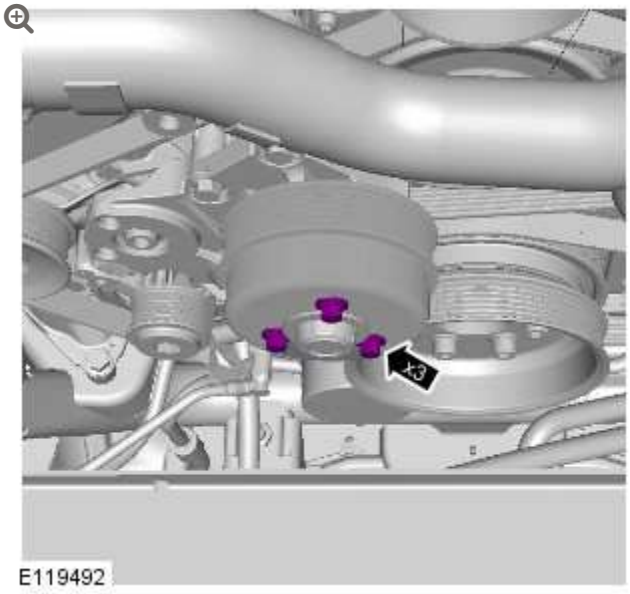

Torque: **25 Nm**

5.

CAUTION:

Always protect the cooling pack elements to prevent accidental damage.

NOTES:

- The thread is right handed.
- Some variation in the illustrations may occur, but the essential information is always correct.

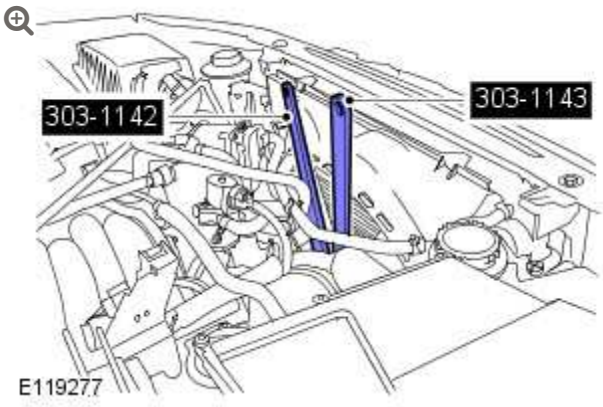

- Install the cooling fan.
- *Torque:* **65 Nm**
- *Special Tool(s):* 303-1142
- *Special Tool(s):* 303-1143

6. Refer to: Supercharger Belt (303-05, Removal and Installation).

7. Connect the battery ground cable.
   Refer to: Specifications (414-00, Specifications).

ACCESSORY DRIVE – V8 5.0L PETROL/V8 S/C 5.0L PETROL

ACCESSORY DRIVE BELT IDLER PULLEY (G1224661)

REMOVAL AND INSTALLATION

86.10.23	JOCKEY PULLEY – GENERATOR DRIVE BELT – RENEW	5000 CC, AJ V8, SUPERCHARGED	0.3	USED WITHINS	+
86.10.23	JOCKEY PULLEY – GENERATOR DRIVE BELT – RENEW	AJ V8, SUPERCHARGED	1.4	USED WITHINS	+

REMOVAL

NOTES:

- Some variation in the illustrations may occur, but the essential information is always correct.
- Removal steps in this procedure may contain installation details.

1. Disconnect the battery ground cable.

Refer to: Specifications (414-00 Battery and Charging System - General Information, Specifications).

2. Refer to: Air Cleaner Outlet Pipe T-Connector (303-12A Intake Air Distribution and Filtering - V8 5.0L Petrol, Removal and Installation).

3. Refer to: Air Cleaner Outlet Pipe T-Connector (303-12B Intake Air Distribution and Filtering - V8 S/C 5.0L Petrol, Removal and Installation).

4. 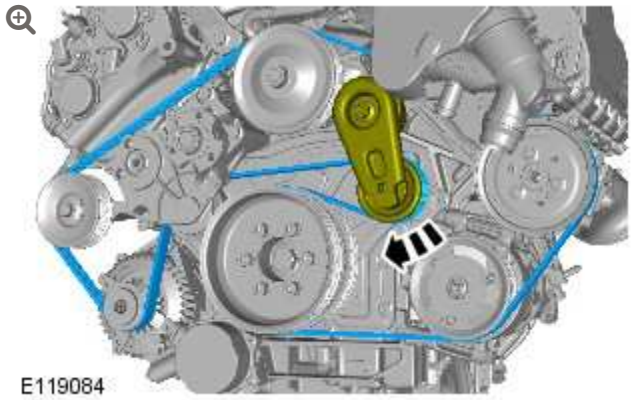

5. 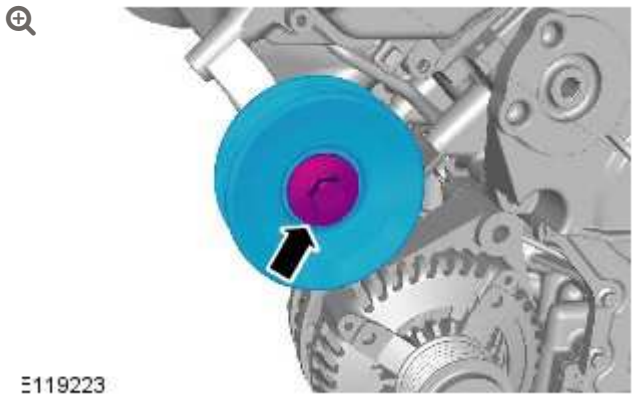

Torque: **47 Nm**

INSTALLATION

1. To install, reverse the removal procedure.

ACCESSORY DRIVE BELT TENSIONER – V8 S/C 5.0L PETROL (G1224664)

REMOVAL AND INSTALLATION

86.10.06	TENSIONER – GENERATOR DRIVE BELT – RENEW	5000 CC, AJ V8, SUPERCHARGED	0.3	USED WITHINS	+

REMOVAL

NOTES:

- Some variation in the illustrations may occur, but the essential information is always correct.
- Removal steps in this procedure may contain installation details.

1. Disconnect the battery ground cable.
   Refer to: Specifications (414-00 Battery and Charging System - General Information, Specifications).

2. Refer to: Air Cleaner Outlet Pipe T-Connector (303-12B Intake Air Distribution and Filtering - V8 S/C 5.0L Petrol, Removal and Installation).

3. 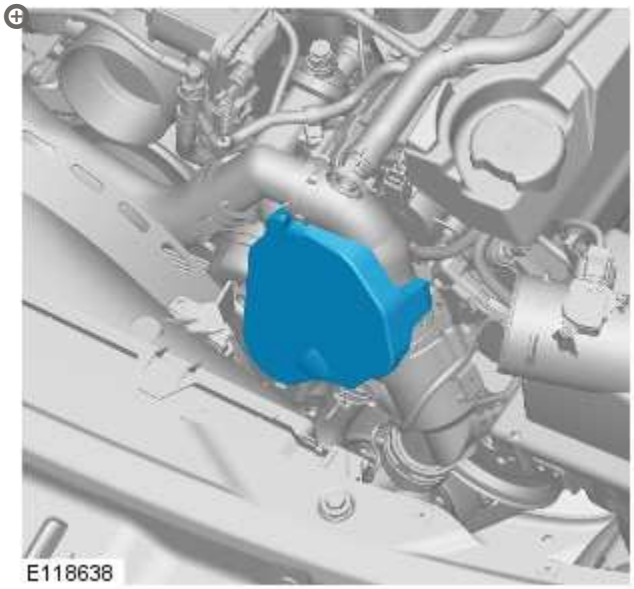

4. **NOTE:**

Note the fitted position.

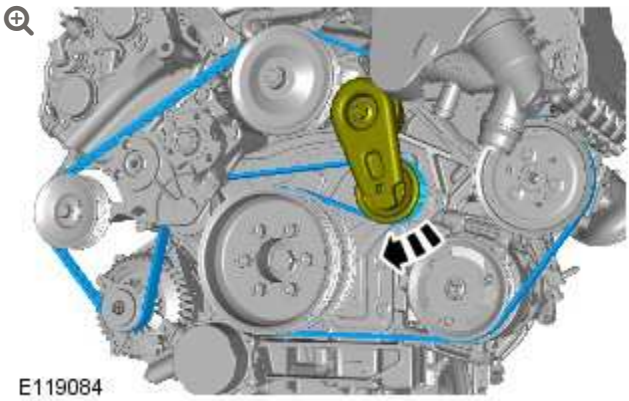

5.



Torque: **47 Nm**

INSTALLATION

1. To install, reverse the removal procedure.

2012.0 RANGE ROVER (LM), 303-05

ACCESSORY DRIVE – V8 5.0L PETROL/V8 S/C 5.0L PETROL

COOLING FAN BELT (G1224829)

REMOVAL AND INSTALLATION

26.25.01	BELT - VISCOUS FAN - RENEW	5000 CC, AJ V8, SUPERCHARGED	0.7	USED WITHINS	+

SPECIAL TOOL(S)



303-1142

Viscous Coupling Wrench



303-1143

Viscous Coupling Holding Tool



303-1500

Installer, Stretchy Belt

REMOVAL

1. Disconnect the battery ground cable.
   Refer to: Specifications (414-00, Specifications).

2. Refer to: Air Cleaner Outlet Pipe T-Connector (303-12, Removal and Installation).

3. **CAUTION:**

   Always protect the cooling pack elements to prevent accidental damage.

NOTE:

Some variation in the illustrations may occur, but the essential information is always correct.

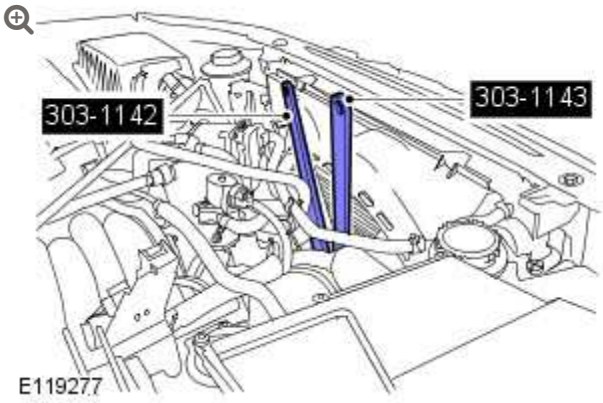

- *Special Tool(s):* 303-1142
- *Special Tool(s):* 303-1143

4.

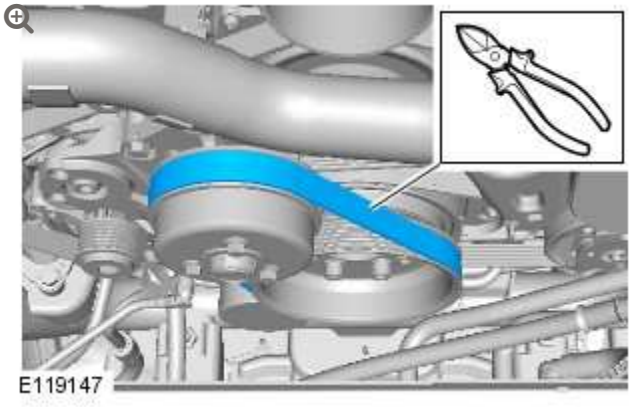

INSTALLATION

1.

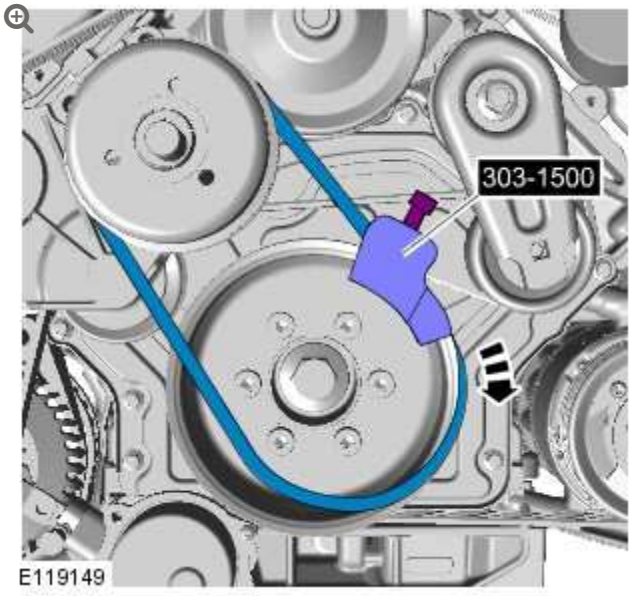

- Install the cooling fan belt.
- *Special Tool(s):* 303-1500

2.
- Whilst rotating the engine, make sure that pressure is applied to the left hand side of the cooling fan belt to aid installation.
- Rotate the engine until the special tool has reached the 9 o clock position.

3. Remove the special tool.

4. Rotate the engine clockwise twice, making sure that the belt is seated on both pulleys correctly.

5. **CAUTION:**

Always protect the cooling pack elements to prevent accidental damage.

NOTE:

Some variation in the illustrations may occur, but the essential information is always correct.

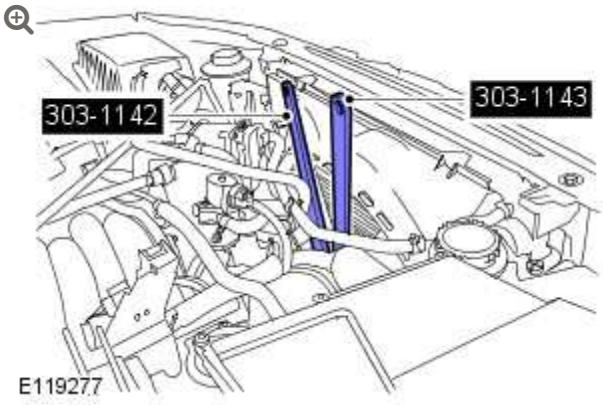

- *Torque:* **65 Nm**
- *Special Tool(s):* 303-1142
- *Special Tool(s):* 303-1143

6. Refer to: Air Cleaner Outlet Pipe T-Connector (303-12, Removal and Installation).

7. Connect the battery ground cable.
   Refer to: Specifications (414-00, Specifications).

ACCESSORY DRIVE – V8 5.0L PETROL/V8 S/C 5.0L PETROL

SUPERCHARGER BELT

(G1224509)

REMOVAL AND INSTALLATION

26.25.01	BELT – VISCOUS FAN – RENEW	5000 CC, AJ V8, SUPERCHARGED	0.7	USED WITHINS	+

REMOVAL

1. Disconnect the battery ground cable.
   Refer to: Specifications (414-00, Specifications).
2. Refer to: Radiator Splash Shield (501-02, Removal and Installation).
3. Refer to: Engine Cover - 5.0L (501-05, Removal and Installation).
4. Refer to: Air Cleaner Outlet Pipe T-Connector (303-12, Removal and Installation).
5.

WARNING:

Make sure to support the vehicle with axle stands.

Raise and support the vehicle.

6.

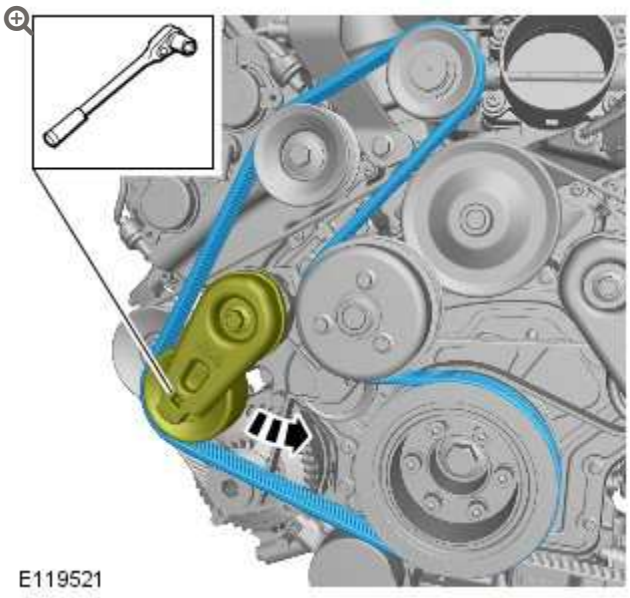

INSTALLATION

1.

CAUTION:

Make sure that the accessory drive belt is correctly aligned to the pulleys. Failure to follow this instruction may result in damage to the vehicle.

To install reverse the removal procedure.

ACCESSORY DRIVE – V8 5.0L PETROL/V8 S/C 5.0L PETROL

SUPERCHARGER BELT IDLER PULLEY (G1224510)

REMOVAL AND INSTALLATION

19.46.09	PULLEY – TENSIONER – SUPERCHARGER DRIVE BELT	5000 CC, AJ V8, SUPERCHARGED	0.7	USED WITHINS	+
26.25.09	IDLER PULLEY – COOLANT FAN BELT – RENEW	5000 CC, AJ V8, SUPERCHARGED	0.7	USED WITHINS	+

REMOVAL

1. Disconnect the battery ground cable.
   Refer to: Specifications (414-00 Charging System - General Information, Specifications).

2. Refer to: Radiator Splash Shield (501-02 Front End Body Panels, Removal and Installation).

3. Refer to: Engine Cover - V8 5.0L Petrol/V8 S/C 5.0L Petrol (501-05 Interior Trim and Ornamentation, Removal and Installation).

4. Refer to: Air Cleaner Outlet Pipe T-Connector (303-12B Intake Air Distribution and Filtering - V8 S/C 5.0L Petrol, Removal and Installation).

5. **WARNING:**

> Make sure to support the vehicle with axle stands.

Raise and support the vehicle.

6. 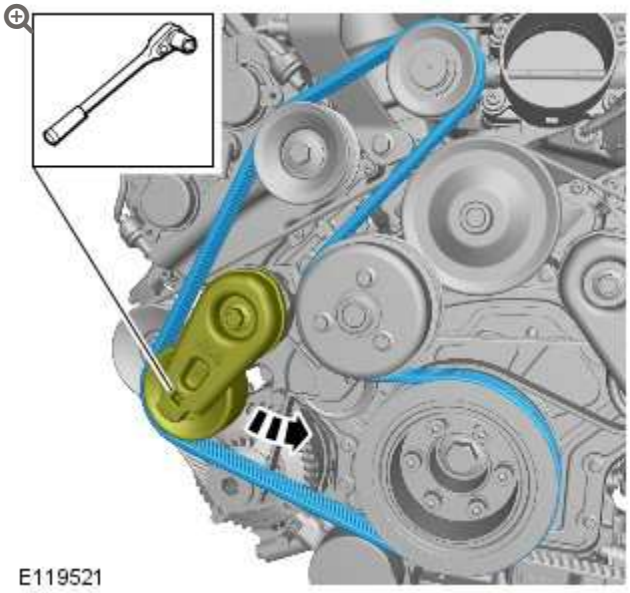

7. 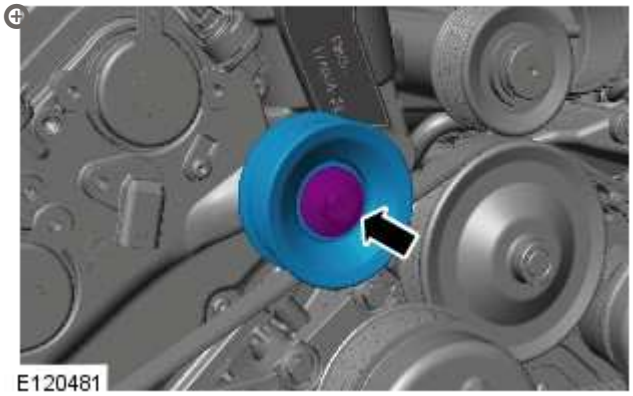

Torque: **47 Nm**

INSTALLATION

1. **CAUTION:**

   > Make sure the supercharger belt is correctly aligned to the pulleys. Failure to follow this instruction may result in damage to the vehicle.

   To install, reverse the removal procedure.

ACCESSORY DRIVE – V8 5.0L PETROL/V8 S/C 5.0L PETROL

SUPERCHARGER BELT TENSIONER (G1224511)

REMOVAL AND INSTALLATION

19.46.09	PULLEY – TENSIONER – SUPERCHARGER DRIVE BELT	5000 CC, AJ V8, SUPERCHARGED	0.7	USED WITHINS	+

REMOVAL

1. Disconnect the battery ground cable.
   Refer to: Specifications (414-00 Charging System - General Information, Specifications).

2. Refer to: Radiator Splash Shield (501-02 Front End Body Panels, Removal and Installation).

3. Refer to: Engine Cover - 5.0L (501-05 Interior Trim and Ornamentation, Removal and Installation).

4. Refer to: Air Cleaner Outlet Pipe T-Connector (303-12 Intake Air Distribution and Filtering - 5.0L, Vehicles With: Supercharger, Removal and Installation).

5.

WARNING:

Make sure to support the vehicle with axle stands.

Raise and support the vehicle.

6.

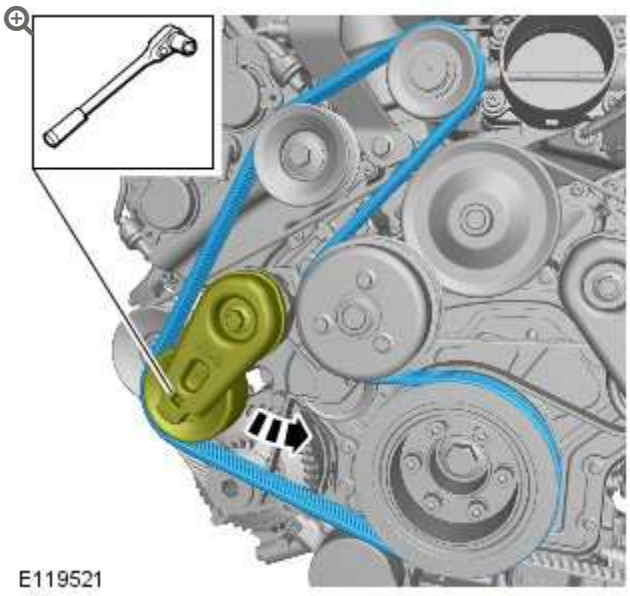

7.

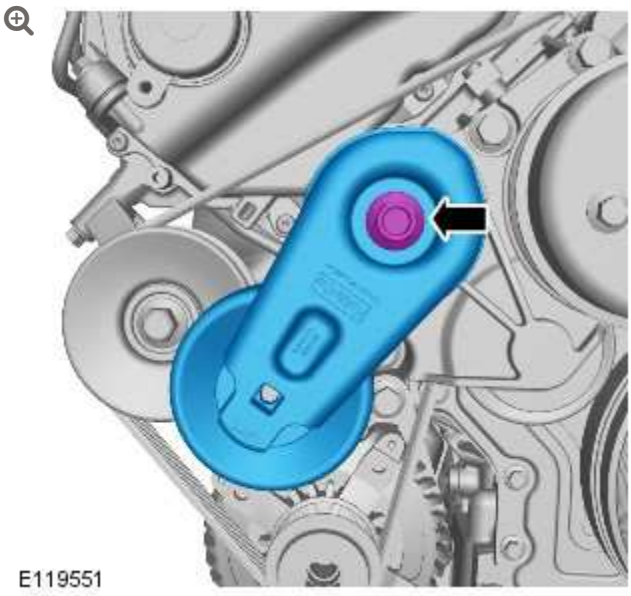

Torque: **40 Nm**

INSTALLATION

1. **CAUTIONS:**

   - Make sure the supercharger belt is correctly aligned to the pulleys. Failure to follow this instruction may result in damage to the vehicle.
   - Clean and inspect the accessory drive belt pulleys for damage.

   To install, reverse the removal procedure.

STARTING SYSTEM – V8 5.0L PETROL/V8 S/C 5.0L PETROL

SPECIFICATIONS

DESCRIPTION	NM	LB-FT	LB-IN
Starter motor retaining bolts	48	36	-
Battery positive terminal connector retaining nut	10	7	-
Solenoid terminal connector retaining nut	4	-	35

STARTING SYSTEM – V8 5.0L PETROL/V8 S/C 5.0L PETROL

STARTER MOTOR (G1224852)

REMOVAL AND INSTALLATION

86.60.01	STARTER MOTOR – RENEW	5000 CC, AJ V8	1.2	USED WITHINS	+

REMOVAL

NOTES:

- Removal steps in this procedure may contain installation details.
- Some variation in the illustrations may occur, but the essential information is always correct.

1. Disconnect the battery ground cable.
   Refer to: Specifications (414-00 Charging System - General Information, Specifications).

2. **WARNING:**

   Make sure to support the vehicle with axle stands.

Raise and support the vehicle.

3. **CAUTION:**

LH illustration shown, RH is similar.

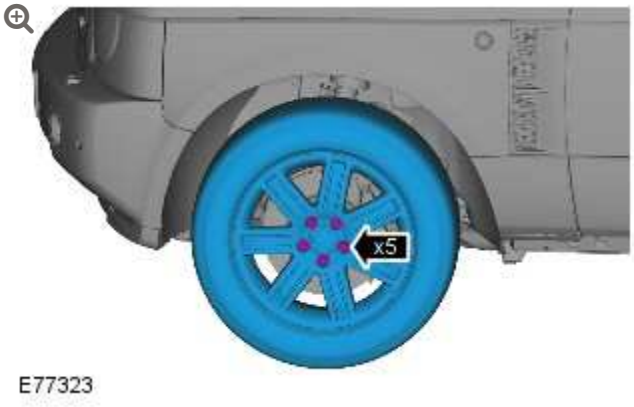

Remove the RH front wheel and tire.
Torque: **140 Nm**

4. Refer to: Radiator Splash Shield (501-02 Front End Body Panels, Removal and Installation).

5. 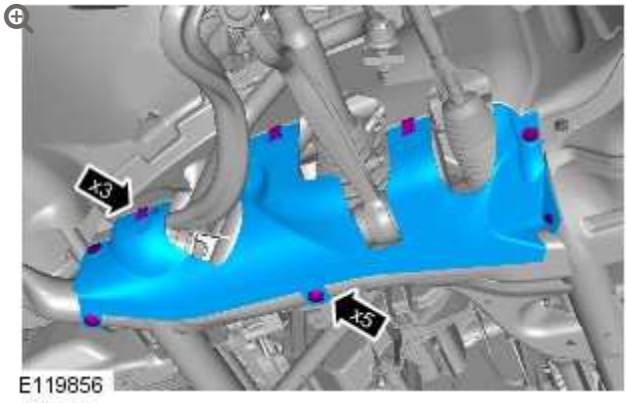

Torque: **8 Nm**

6.

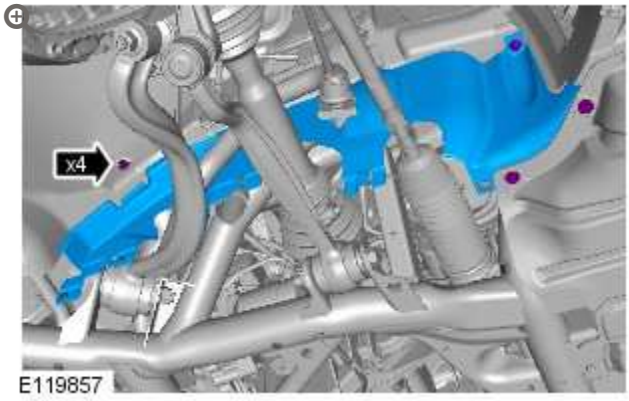

Torque: **8 Nm**

7.

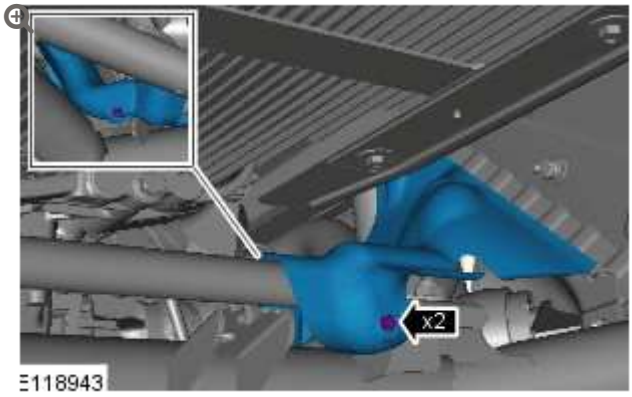

Torque: **10 Nm**

8.

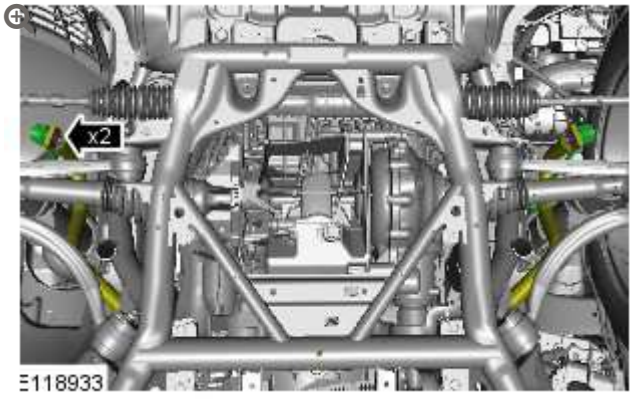

Torque: **100 Nm**

9.

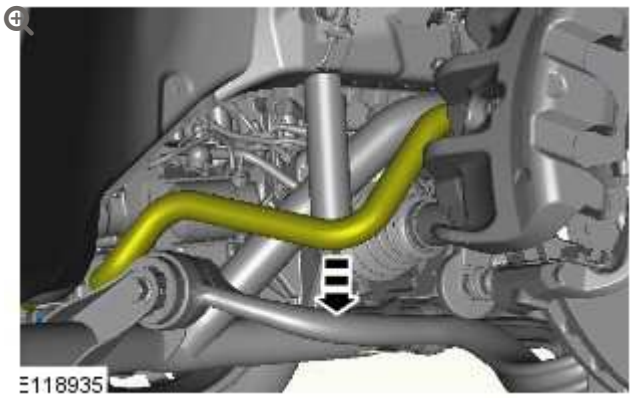

10.

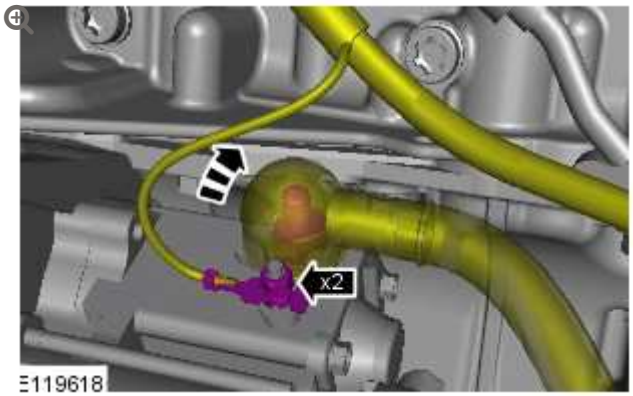

Torque:

M8 **10 Nm**

M6 **4 Nm**

11.

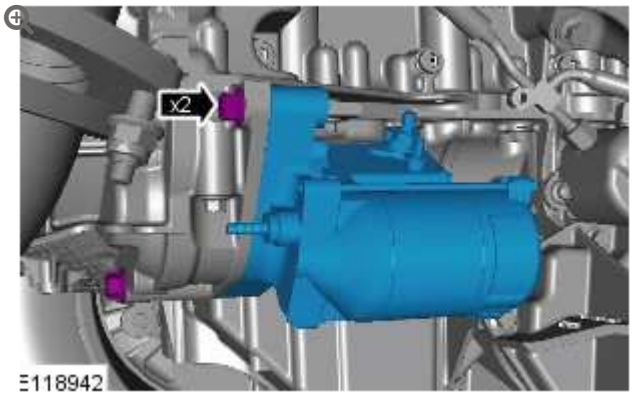

Torque: **48 Nm**

INSTALLATION

1. To install, reverse the removal procedure.

STARTING SYSTEM – V8 5.0L PETROL/V8 S/C 5.0L PETROL

DIAGNOSIS AND TESTING

PRINCIPLES OF OPERATION

For a detailed description of the starting system and operation, refer to the relevant Description and Operation section in the Workshop Manual.
REFER to: Starting System (303-06 Starting System - V8 5.0L Petrol/V8 S/C 5.0L Petrol, Description and Operation).

INSPECTION AND VERIFICATION

CAUTION:

Diagnosis by substitution from a donor vehicle is NOT acceptable. Substitution of control modules does not guarantee confirmation of a fault, and may also cause additional faults in the vehicle being tested and/or the donor vehicle.

1. Verify the customer concern.

2. Visually inspect for obvious signs of mechanical or electrical damage.

Visual Inspection

MECHANICAL	ELECTRICAL
▪ Gear selector lever cable adjustment (vehicles with automatic transmission) ▪ Starter motor ▪ Engine (turns freely)	▪ Battery ▪ Fuses ▪ Starter relay ▪ Wiring harness(es) ▪ Damaged, loose or corroded connectors ▪ Ignition switch ▪ Generator ▪ Engine Control Module (ECM) ▪ Transmission Control Module (TCM)

3. If an obvious cause for an observed or reported concern is found, correct the cause (if possible) before proceeding to the next step.

4. If the cause is not visually evident, verify the symptom and refer to the Symptom Chart, alternatively check for Diagnostic Trouble Codes (DTCs) and refer to the DTC Index.

5. Check DDW for open campaigns. Refer to the corresponding bulletins and SSM's which may be valid for the specific customer complaint and carry out the recommendations as needed.

SYMPTOM CHART

SYMPTOM	POSSIBLE CAUSES	ACTION

The engine does not crank (starter motor does **not** turn)	▪ Gear selector not in **P** or **N** position (vehicles with automatic transmission)
	▪ Battery
	▪ Starter relay
	  ▪ Output circuit: high resistance
	  ▪ Output circuit: short circuit to power
	▪ Invalid key code received by Central Junction Box (CJB)
	▪ Harness/Connectors
	▪ Starter motor
	▪ Ignition switch
	▪ Generator
	▪ Engine seized
		Make sure the gear selector is in the **P** or **N** position and correctly adjusted. Check the battery condition and state of charge. Check for DTCs indicating an immobilizer fault. Check the starter motor relay, ignition switch and generator circuits. Refer to the electrical guides. Check that the engine turns freely.

The engine does not crank (starter motor **does** turn)	▪ Starter motor fitment ▪ Starter motor ▪ Flywheel/Drive plate ring gear	Check the starter motor fitment (fasteners tight, starter motor square to engine, etc). Check the flywheel/drive plate ring gear teeth for damage, foreign objects, etc.
Engine cranks too slowly	▪ Battery ▪ Harness/Connectors ▪ Starter motor ▪ Oil grade	Check the battery condition and state of charge. Check the starter motor circuits. Refer to the electrical guides. Check the engine oil grade and condition.
Engine cranks too fast	▪ Low engine compression	Check the engine condition and compressions.
Excessive starter motor noise	▪ Starter motor ▪ Flywheel/Drive plate ring gear	Check the starter motor fitment (fasteners tight, motor square to engine, etc). Check the starter

SYMPTOM	POSSIBLE CAUSES	ACTION
	▪ Starter motor installation/casing	motor casing condition. Check the flywheel/drive plate ring gear teeth for damage, foreign objects, etc.

ECO (stop/start) system inoperative	▪ ECO system inhibited
	▪ ECO system fault
		NOTE:
		"ECO STOP/START FAULT" will be displayed in the instrument cluster message centre when the system is inoperative due to a fault.
		▪ Refer to the ECO System Inhibits table for possible inhibit conditions
		  ▪ ECO system inhibited due to owner error: Explain/demonstrate the ECO system operation to the owner
		  ▪ ECO system inhibited due to battery condition: Using the manufacturer approved diagnostic system, perform the Power Supply Service Mode Diagnostic routine
		▪ Using the manufacturer approved diagnostic system, check the Engine Control Module (ECM) for related DTCs and refer to the relevant DTC index
		▪ Automatic/ECO stop/start system inhibited due to a DTC clear performed and a drive cycle not completed: Road test the vehicle between 48-80 km/h (30-50 mph) for 2 to 3 minutes, allow the engine to idle, auto stop/start will now activate

ECO SYSTEM INHIBITS

The inhibit conditions listed below will not set Diagnostic Trouble Codes (DTCs) but will set flags which can be viewed using the manufacturer approved diagnostic system - Datalogger / Engine Control Module (ECM). Normal ECO system operation will resume when an inhibit condition is no longer present, but the battery related inhibits may persist for some time.

NOTES:

- Performing a DTC clear on a petrol (gas) engine vehicle will inhibit the auto stop/start system.
- Do not reset the Battery Monitoring System (BMS) to rectify battery condition inhibits. This may temporarily restore ECO system operation but will lead to a recurrence of the fault.

INHIBITS
▪ ECO switch has been pressed by driver
▪ DTC clear performed
▪ Transmission not in neutral
▪ Clutch pedal not fully released
▪ Accelerator pedal not released
▪ Hood open detected
▪ Driver door detected open
▪ Driver seatbelt not fastened
▪ Hill Descent Control (HDC) is switched on
▪ Terrain response special programme selected
▪ Climate control demand exceeds calibrated threshold
▪ Heated windshield operating
▪ Trailer connected
▪ Brake booster vacuum below threshold
▪ Engine coolant temperature below threshold
▪ Engine oil temperature below threshold

INHIBITS

- Catalytic converter outside either pre or post calibration range
- Diesel Particulate Filter (DPF) active regeneration in progress (diesel engines only)
- Battery state of charge low
- Battery cold cranking capability below threshold
- Ambient temperature above 40°C
- Ambient temperature below 0°C

DTC INDEX

For a list of Diagnostic Trouble Codes (DTCs) that could be logged on this vehicle, please refer to Section 100-00. REFER to: Diagnostic Trouble Code (DTC) Index - V8 5.0L Petrol/V8 S/C 5.0L Petrol (100-00 General Information, Description and Operation).

STARTING SYSTEM – V8 5.0L PETROL/V8 S/C 5.0L PETROL

DESCRIPTION AND OPERATION

COMPONENT LOCATION

NOTE:

Installation on naturally aspirated engine shown, installation on supercharger engine similar.

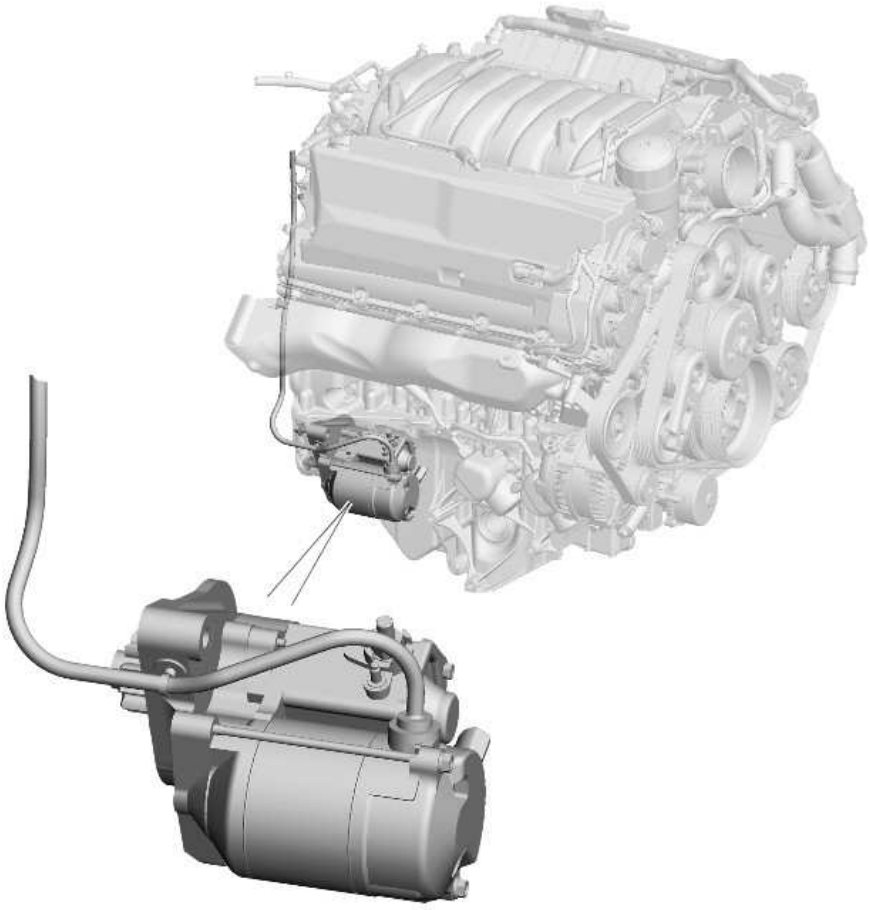

E120141

INTRODUCTION

The starter motor is manufactured by Denso and is rated at 1.4 kW. The motor is geared directly to the pinion. The motor is a series wound motor with an overrunning clutch. The interior of the motor is ventilated through a breather tube attached to the rear of the engine.

The starter motor is located on the rear right side of the engine sump. The motor is installed in an aperture in the sump and the pinion is engaged with the ring gear of the crankshaft drive plate.

A heavy duty cable, which supplies the electrical power to turn the starter motor, is connected to the battery positive terminal via 400 A megafuse.

At the starter motor, the cable is connected to a terminal stud on the solenoid. The power feed from the starter relay, to energize the solenoid, is connected to a second terminal stud on the solenoid.

Starer Motor Assembly

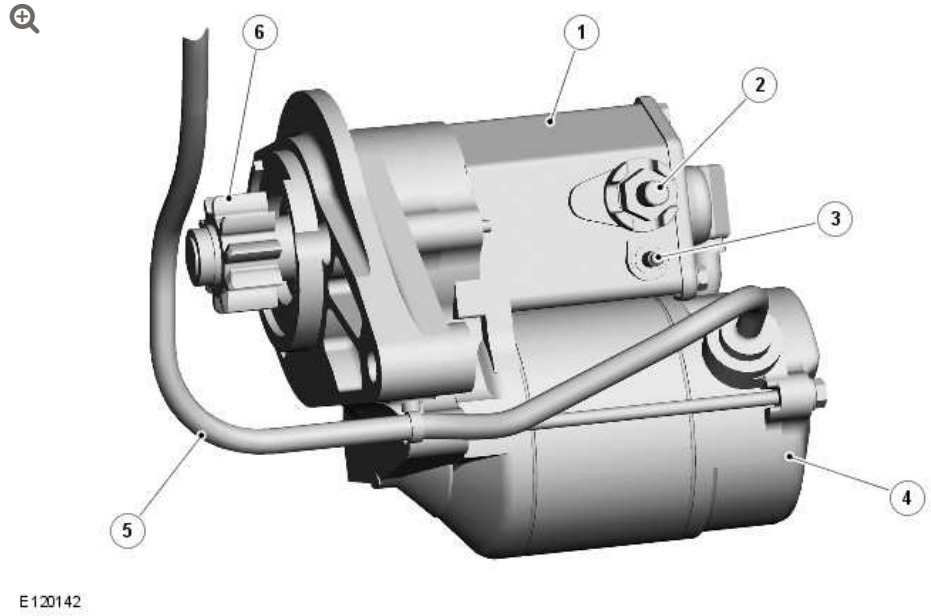

ITEM	DESCRIPTION
1	Starter solenoid
2	Starter power terminal
3	Solenoid power terminal
4	Electric motor
5	Breather tube
6	Pinion gear

CONTROL DIAGRAM

NOTE:

A = Hardwired.

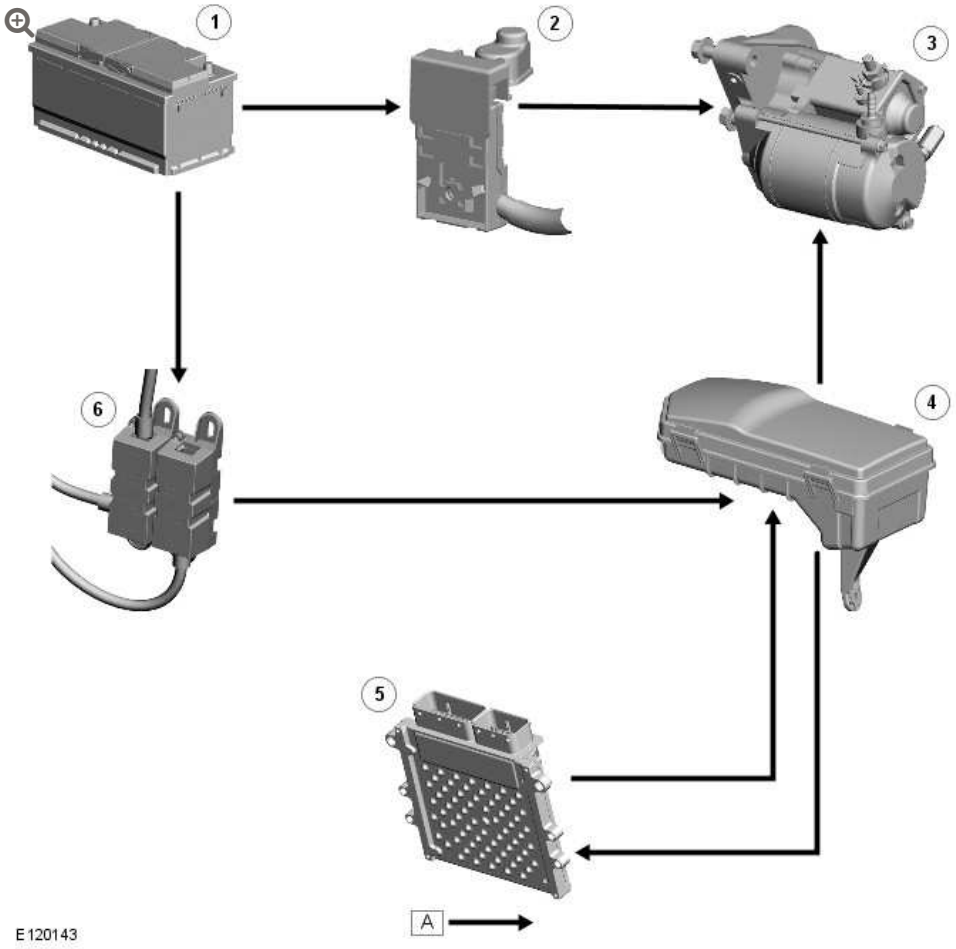

ITEM	DESCRIPTION
1	Battery
2	Terminal post megafuse (400 A)
3	Starter motor
4	EJB (engine junction box) (starter relay)
5	ECM (engine control module)
6	BJB (battery junction box) 2 (250 A megafuse)

OPERATION

Engine crank requests are monitored by the passive anti-theft system and, if valid, passed on to the ECM (engine control module).
For additional information, refer to: Anti-Theft - Passive (419-01 Anti-Theft - Passive, Description and Operation).

When the ECM receives a crank request, it energizes the starter relay in the EJB (engine junction box). The energized starter relay supplies 12 V power (fed via the 250 A megafuse in BJB (battery junction box) 2 to energize the pull-in coil of the starter solenoid. Once activated, the pull-in coil engages the solenoid plunger, which engages the pinion gear with the ring gear. The plunger then closes the solenoid circuit, feeding power from the 400 A megafuse on the battery positive terminal to the starter motor.

ENGINE IGNITION – V8 5.0L PETROL/V8 S/C 5.0L PETROL

SPECIFICATIONS

ITEM	SPECIFICATION
Firing order	1:2:7:3:4:5:6:8
Spark plug type - Vehicles with supercharger	ILKAR7C-10
Spark plug type - Vehicles without supercharger	ILKAR7C-10

DESCRIPTION	NM	LB-FT	LB-IN
Spark plugs	22	16	-
Ignition coil-on-plug retaining bolts	7	5	-

ENGINE IGNITION – V8 5.0L PETROL/V8 S/C 5.0L PETROL

DESCRIPTION AND OPERATION

COMPONENT LOCATION

NOTE:

Installation on RHD (right-hand drive) naturally aspirated vehicle shown, other installations similar.

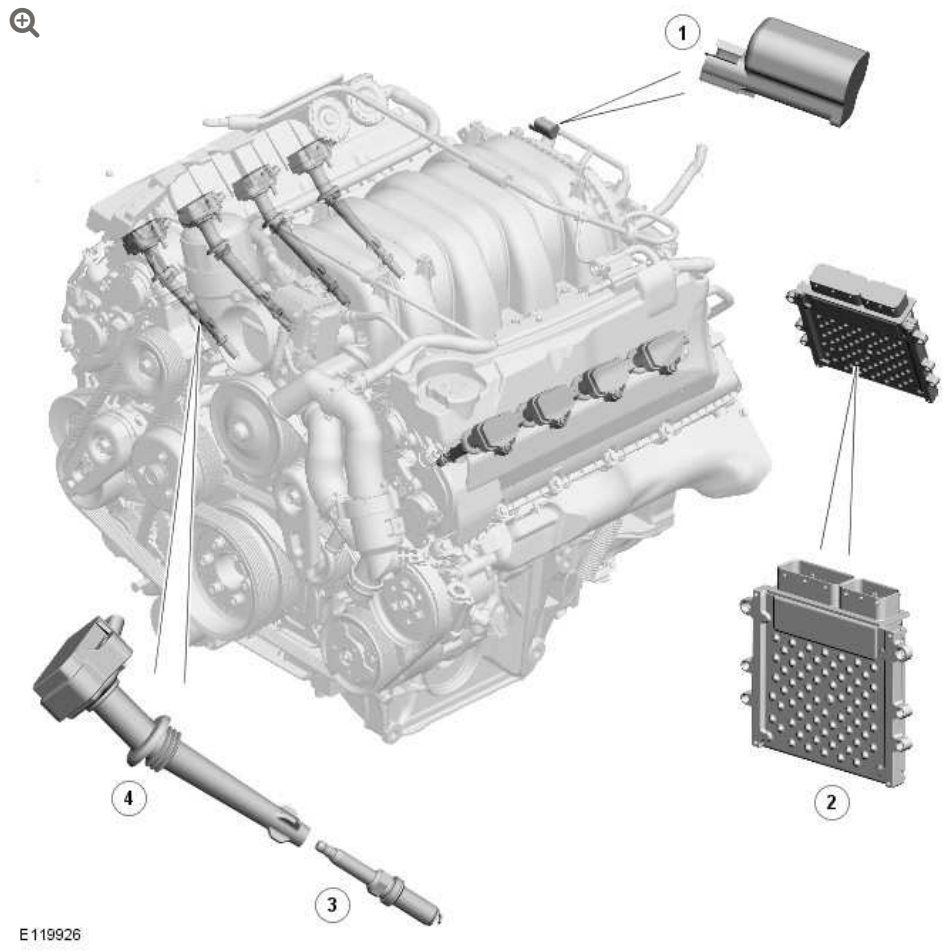

ITEM	DESCRIPTION
1	RFI (radio frequency interference) suppressor
2	ECM (engine control module)
3	Spark plug (8 off)
4	Ignition coil (8 off)

INTRODUCTION

The engine ignition system is a coil-on-plug, single spark system controlled by the ECM (engine control module). An iridium tipped spark plug is installed in each combustion chamber, between the inlet and exhaust valves, and an ignition coil is installed on each spark plug. A RFI (radio frequency interference) suppressor is connected to the power feed to the ignition coils.

IGNITION COILS



E116147

The ignition coils are installed in the cylinder head covers, under the NVH (noise, vibration and harshness) covers. Each ignition coil locates on a spark plug and is secured to the related cylinder head cover with a single screw. Each ignition coil incorporates a three pin electrical connector for connection to the engine harness.

Each ignition coil contains a primary and a secondary winding. The primary winding receives electrical power from the ignition relay in the power distribution box. A power stage in the primary winding allows the ECM to interrupt the power supply, to induce a voltage in the secondary winding and thus the spark plug. A diode in the ground side of the secondary winding reduces any undesirable switch-on voltage, to prevent misfiring into the intake manifold. The power stage limits the maximum voltage and current in the primary

winding, to protect the power stage and limit the voltage in the secondary winding.

RFI SUPPRESSOR

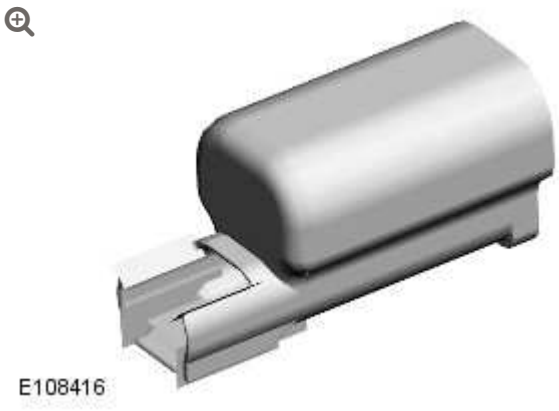

The RFI (radio frequency interference) suppressor is installed on the engine harness carrier at the rear of the engine.

CONTROL DIAGRAM

NOTE:

A = Hardwired

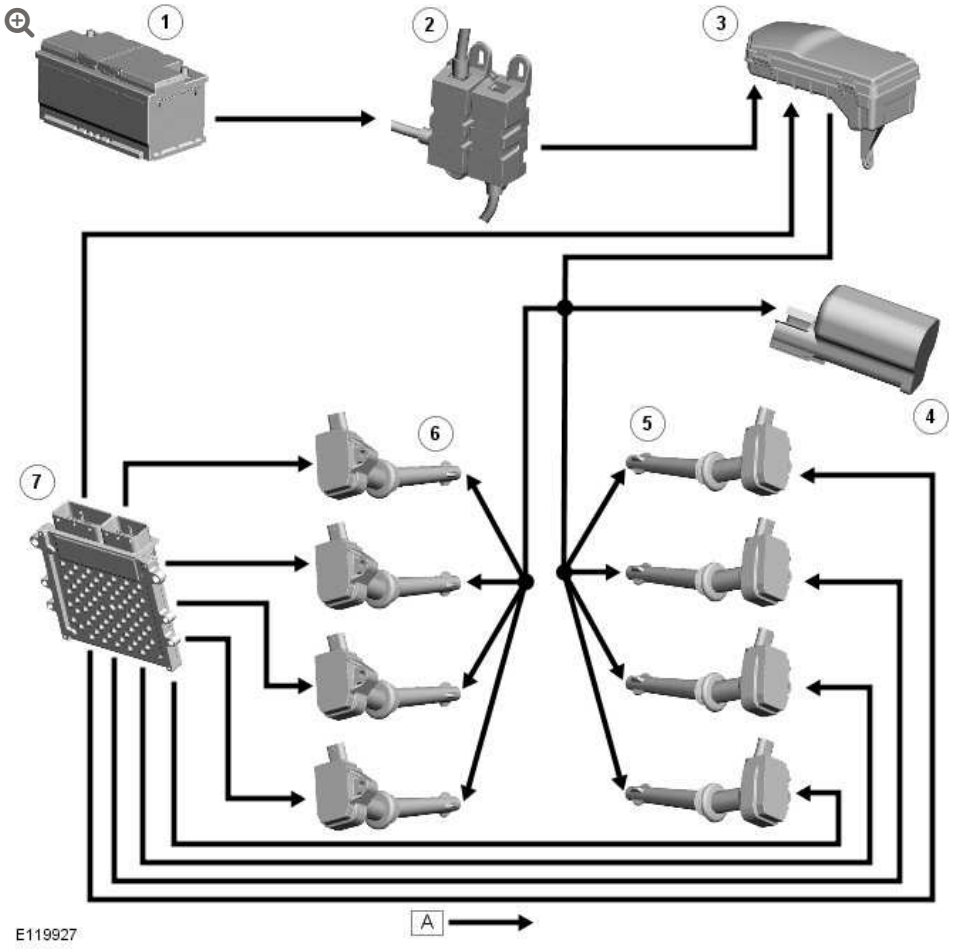

ITEM	DESCRIPTION
1	Battery
2	BJB (battery junction box) 2 (250 A megafuse)
3	EJB (engine junction box) (ECM relay)
4	RFI suppressor
5	LH (left hand) cylinder bank ignition coil (4 off)
6	RH (right hand) cylinder bank ignition coil (4 off)
7	ECM

OPERATION

The ignition coils are supplied with electrical power from the battery via a 250 A megafuse in BJB 2 and the ECM relay in the EJB (engine junction box). The ECM controls the operation of the ECM relay.

The ECM sends a separate signal to each ignition coil to trigger the power stage switching. The ECM calculates the dwell time from the battery voltage and engine speed, to ensure a constant energy level is produced in the secondary coil each time the power stage is switched. This ensures sufficient spark energy is available without excessive primary current flow, which avoids overheating and damage to the ignition coils.

The ECM calculates the ignition timing for individual cylinders from:

- Engine speed
- Camshaft position
- Engine load
- Engine temperature
- The knock control function
- The shift control function
- The idle speed control function.

ENGINE IGNITION – V8 5.0L PETROL/V8 S/C 5.0L PETROL

DIAGNOSIS AND TESTING

PRINCIPLES OF OPERATION

For a detailed description of the engine ignition system and operation, refer to the relevant Description and Operation section of the workshop manual. REFER to: Engine Ignition (303-07 Engine Ignition - V8 5.0L Petrol/V8 S/C 5.0L Petrol, Description and Operation).

INSPECTION AND VERIFICATION

CAUTION:

Diagnosis by substitution from a donor vehicle is **NOT** acceptable. Substitution of control modules does not guarantee confirmation of a fault and may also cause additional faults in the vehicle being checked and/or the donor vehicle.

NOTE:

Check and rectify basic faults before beginning diagnostic routines involving pinpoint tests.

1. Verify the customer concern.

2. Visually inspect for obvious signs of mechanical and electrical damage.

Visual Inspection

MECHANICAL	ELECTRICAL
▪ Engine oil level ▪ Cooling system coolant level ▪ Fuel level ▪ Fuel contamination/grade/quality	▪ Fuses ▪ Wiring harness ▪ Loose or corroded electrical connectors ▪ Ignition coils ▪ Sensor(s) ▪ Engine Control Module (ECM) ▪ Transmission Control Module (TCM)

3. If an obvious cause for an observed or reported concern is found, correct the cause (if possible) before proceeding to the next step.

4. If the cause is not visually evident, verify the symptom and refer to the Symptom Chart, alternatively check for Diagnostic Trouble Codes (DTCs) and refer to the DTC Index.

SYMPTOM CHART

SYMPTOM	POSSIBLE CAUSES	ACTION
Engine cranks, but does not fire	▪ Engine breather system disconnected/restricted ▪ Ignition system ▪ Fuel system ▪ Electronic engine control	Ensure the engine breather system is free from restriction and is correctly installed. Check for ignition system, fuel system and electronic engine control DTCs and refer to the relevant DTC Index
Engine cranks and fires, but will not start	▪ Evaporative emissions purge valve ▪ Fuel pump ▪ Spark plugs ▪ HT short to ground (tracking) check rubber boots for cracks/damage ▪ Ignition system	Check for evaporative emissions, fuel system and ignition system related DTCs and refer to the relevant DTC Index
Difficult cold start	▪ Engine coolant level/anti-freeze content ▪ Battery ▪ Electronic engine controls ▪ Fuel pump ▪ Purge valve	Check the engine coolant level and condition. Ensure the battery is in a fully charged and serviceable condition. Check for electronic engine controls, engine emissions, fuel system and evaporative emissions system related DTCs and refer to the relevant DTC Index
Difficult hot start	▪ Injector leak ▪ Electronic engine control ▪ Purge valve ▪ Fuel pump ▪ Ignition system	Check for injector leak, install new injector as required. Check for electronic engine controls, evaporative emissions, fuel system, ignition system and engine emission system related DTCs and refer to the relevant DTC Index
Difficult to start after hot soak (vehicle	▪ Injector leak	Check for injector leak, install new injector as

SYMPTOM	POSSIBLE CAUSES	ACTION
standing, engine off, after engine has reached operating temperature)	▪ Electronic engine control ▪ Purge valve ▪ Fuel pump ▪ Ignition system	required. Check for electronic engine controls, evaporative emissions, fuel system, ignition system and engine emission system related DTCs and refer to the relevant DTC Index
Engine stalls soon after start	▪ Breather system disconnected/restricted ▪ ECM relay ▪ Electronic engine control ▪ Ignition system ▪ Air intake system restricted ▪ Air leakage ▪ Fuel lines	Ensure the engine breather system is free from restriction and is correctly installed. Check for electronic engine control, ignition system and fuel system related DTCs and refer to the relevant DTC Index. Check for blockage in air filter element and air intake system. Check for air leakage in air intake system
Engine hesitates/poor acceleration	▪ Fuel pressure, fuel pump, fuel lines ▪ Injector leak ▪ Air leakage ▪ Electronic engine control ▪ Throttle motor ▪ Restricted accelerator pedal travel (carpet, etc) ▪ Ignition system ▪ Transmission malfunction	Check for fuel system related DTCs and refer to the relevant DTC Index. Check for injector leak, install new injector as required. Check for air leakage in air intake system. Ensure accelerator pedal is free from restriction. Check for electronic engine controls, ignition, engine emission system and transmission related DTCs and refer to the relevant DTC Index
Engine backfires	▪ Fuel pump/lines ▪ Air leakage ▪ Electronic engine controls ▪ Ignition system	Check for fuel system failures. Check for air leakage in intake air system. Check for electronic engine controls, ignition system and VCT system related

SYMPTOM	POSSIBLE CAUSES	ACTION
	▪ Sticking variable camshaft timing (VCT) hub	DTCs and refer to the relevant DTC Index
Engine surges	▪ Fuel pump/lines ▪ Electronic engine controls ▪ Throttle motor ▪ Ignition system	Check for fuel system failures. Check for electronic engine controls, throttle system and ignition system related DTCs and refer to the relevant DTC Index
Engine detonates/knocks	▪ Fuel pump/lines ▪ Air leakage ▪ Electronic engine controls ▪ Sticking VCT hub	Check for fuel system failures. Check for air leakage in intake air system. Check for electronic engine controls and VCT system related DTCs and refer to the relevant DTC Index
No throttle response	▪ Electronic engine controls ▪ Throttle motor	Check for electronic engine controls and throttle system related DTCs and refer to the relevant DTC Index
Poor throttle response	▪ Breather system disconnected/restricted ▪ Electronic engine control ▪ Transmission malfunction ▪ Traction control event ▪ Air leakage	Ensure the engine breather system is free from restriction and is correctly installed. Check for electronic engine controls, transmission and traction control related DTCs and refer to the related DTC Index. Check for air leakage in intake air system

DTC INDEX

For a list of Diagnostic Trouble Codes (DTCs) that could be logged on this vehicle, please refer to Section 100-00. REFER to: Diagnostic

Trouble Code (DTC) Index - V8 5.0L Petrol/V8 S/C 5.0L Petrol (100-00 General Information, Description and Operation).

ENGINE IGNITION – V8 5.0L PETROL/V8 S/C 5.0L PETROL

IGNITION COIL–ON–PLUG

(G1224088)

REMOVAL AND INSTALLATION

18.20.44	IGNITION COIL – MULTIPLE – EACH – RENEW	5000 CC, AJ V8	0.2	USED WITHINS	+
18.20.44	IGNITION COIL – MULTIPLE – EACH – RENEW	AJ V8, SUPERCHARGED	0.3	USED WITHINS	+

REMOVAL

NOTE:

Removal steps in this procedure may contain installation details.

1. Disconnect the battery ground cable.
   Refer to: Specifications (414-00, Specifications).

2.

Refer to: Engine Cover - 5.0L (501-05, Removal and Installation).

3. **NOTE:**

> Some variation in the illustrations may occur, but the essential information is always correct.

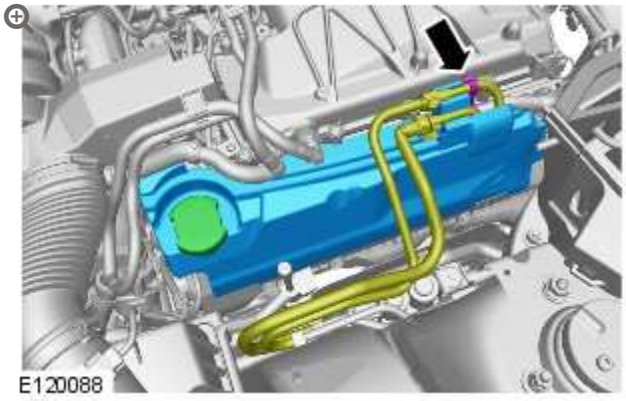

4.

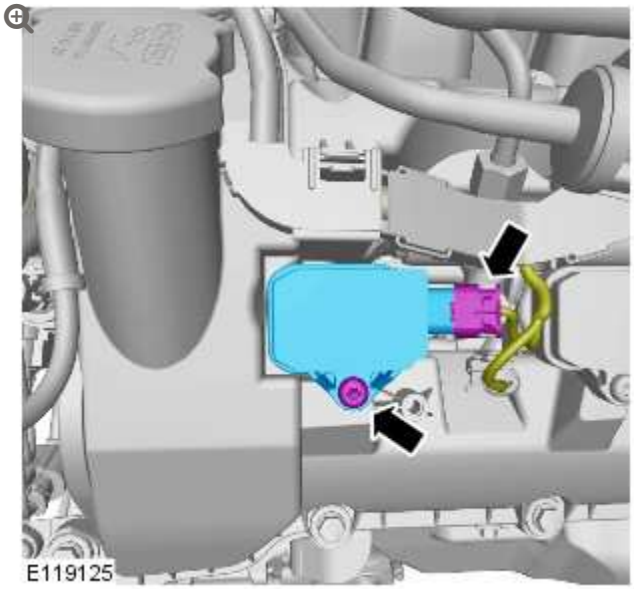

Torque: **7 Nm**

INSTALLATION

1. To install, reverse the removal procedure.

ENGINE EMISSION CONTROL – V8 S/C 5.0L PETROL

DIAGNOSIS AND TESTING

PRINCIPLES OF OPERATION

For a detailed description of the engine emission system and operation, refer to the relevant Description and Operation section of the Workshop Manual.
REFER to: Engine Emission Control (303-08B Engine Emission Control - V8 S/C 5.0L Petrol, Description and Operation).

INSPECTION AND VERIFICATION

CAUTION:

Diagnosis by substitution from a donor vehicle is NOT acceptable. Substitution of control modules does not guarantee confirmation of a fault, and may also cause additional faults in the vehicle being tested and/or the donor vehicle.

1. Verify the customer concern.

2. Visually inspect for obvious signs of mechanical or electrical damage.

Visual Inspection

MECHANICAL	ELECTRICAL
▪ Engine breather hoses ▪ Oil separator	▪ Fuse(s) ▪ Wiring harness ▪ Loose or corroded electrical connector(s) ▪ Intake manifold tuning (IMT) valve ▪ Engine control module (ECM)

3. If an obvious cause for an observed or reported concern is found, correct the cause (if possible) before proceeding to the next step.

4. If the cause is not visually evident, verify the symptom and refer to the Symptom Chart, alternatively check for Diagnostic Trouble Codes (DTCs) and refer to the DTC Index.

SYMPTOM CHART

SYMPTOM	POSSIBLE CAUSES	ACTION
Engine stops/stalls Excessive fuel consumption Excessive black smoke Excessive emissions	▪ Breather system disconnected/restricted/blocked ▪ Breather system restricted/blocked	Check the engine breather system. Check the oil separator. Check for DTCs indicating a throttle or sensor fault. Rectify as necessary.
Excessive blow-by	▪ Breather system restricted/blocked	Check the engine breather hoses. Check

SYMPTOM	POSSIBLE CAUSES	ACTION
		the oil separator. Rectify as necessary.
Engine oil leaks	▪ Breather system restricted/blocked	Check the engine breather hoses. Check the oil separator. Rectify as necessary.

DTC INDEX

For a list of Diagnostic Trouble Codes (DTCs) that could be logged on this vehicle, please refer to Section 100-00. REFER to: Diagnostic Trouble Code (DTC) Index - V8 5.0L Petrol/V8 S/C 5.0L Petrol (100-00 General Information, Description and Operation).

2012.0 RANGE ROVER (LM), 303-08

ENGINE EMISSION CONTROL – V8 S/C 5.0L PETROL

DESCRIPTION AND OPERATION

COMPONENT LOCATION

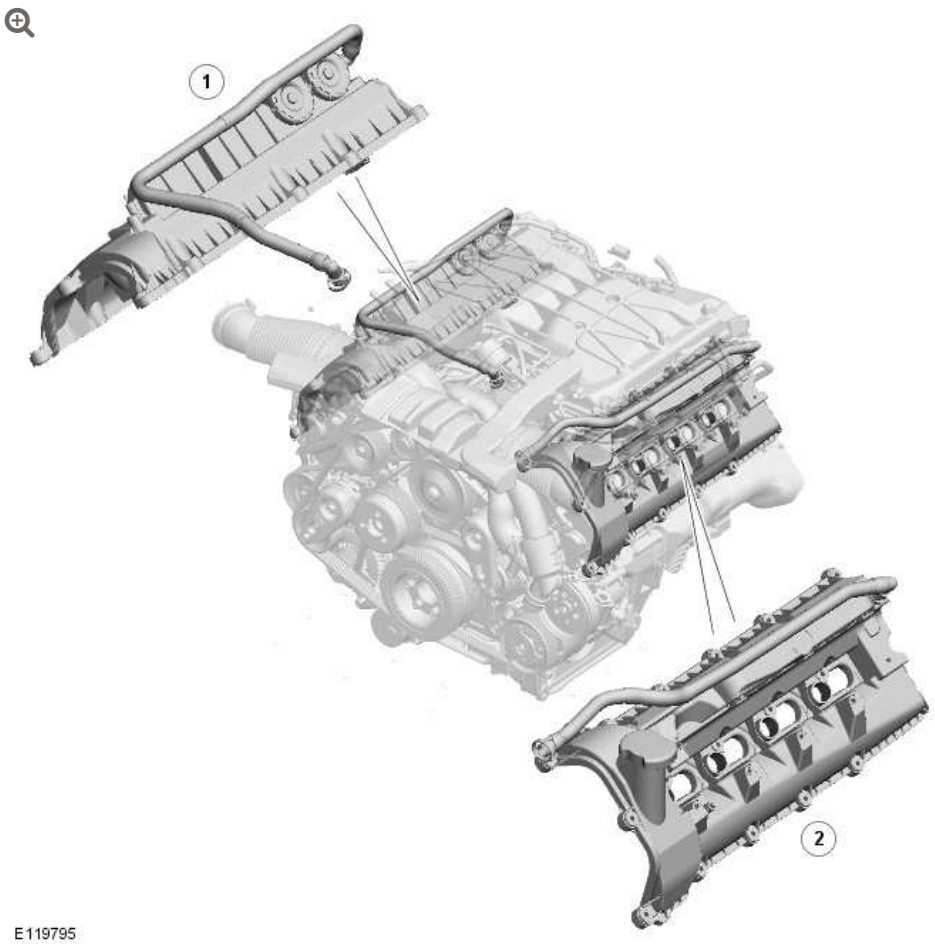

ITEM	DESCRIPTION
1	Part load breather
2	Full load breather

INTRODUCTION

The engine emission control system reduces the level of hydrocarbon emissions released to atmosphere from the engine. The engine emission control system consists of a PCV (positive crankcase ventilation) system with part and full load breathers. Piston blow-by gases are drawn through the breathers into the engine air intake and added to the air charge. The resultant depression in the engine sump, front covers and cylinder head covers reduces the load on the joint seals in those areas.

PART LOAD BREATHER

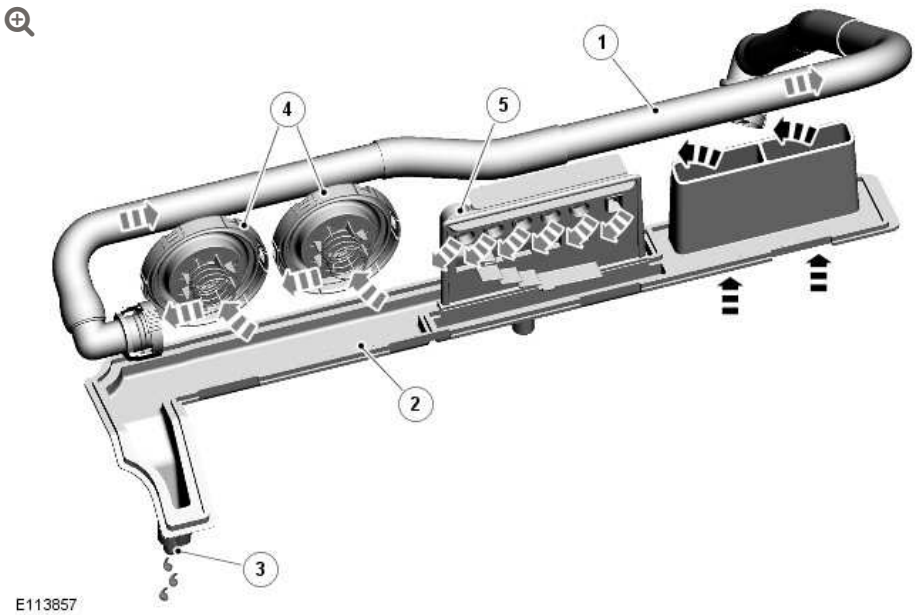

ITEM	DESCRIPTION
1	Flexible hose
2	Baffle plate

ITEM	DESCRIPTION
3	Oil drain
4	PCV (positive crankcase ventilation) valves
5	Oil separator

The part load breather consists of an oil separator, two PCV valves and a flexible hose. The oil separator and the PCV valves are installed in the top of the RH (right-hand) cylinder head cover. The flexible hose connects the RH cylinder head cover to the inlet of the SC (supercharger).

The oil separator is installed in a channel in the top of the cylinder head cover. A baffle plate, which incorporates a gas inlet and an oil drain, is installed over the channel. The two PCV valves are installed on the outside of the cylinder head cover and connected in parallel in the gas outlet from the channel to the flexible hose. The PCV valves prevent reverse flow into the cylinder head cover when there is minimal depression in the inlet of the SC.

FULL LOAD BREATHER

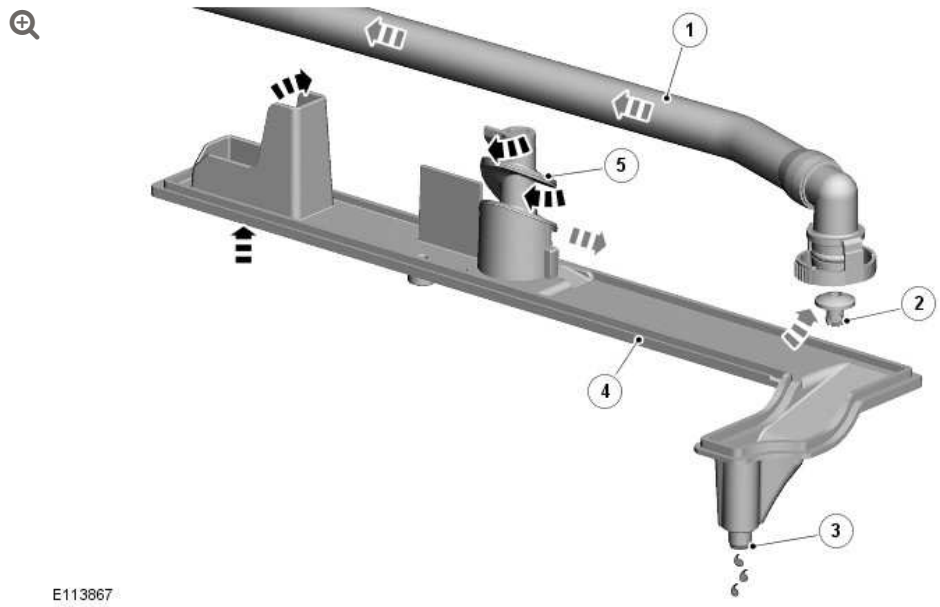

ITEM	DESCRIPTION
1	Flexible hose
2	Two-way valve
3	Oil drain
4	Baffle plate
5	Oil separator

The full load breather consists of an oil separator, a two-way valve and a flexible hose. The oil separator and the two-way valve are installed in the top of the LH (left-hand) cylinder head cover. The flexible hose connects the LH cylinder head cover to the LH air duct of the intake air distribution and filtering system.

The oil separator is installed in a channel in the top of the cylinder head cover. A baffle plate, which incorporates a gas inlet and an oil drain, is installed over the channel. The two-way valve is installed in the gas outlet from the channel. The two-way valve prevents reverse flow into the cylinder head cover when there is minimal depression in the air duct.

INTAKE AIR DISTRIBUTION AND FILTERING – V8 S/C 5.0L PETROL

SPECIFICATIONS

DESCRIPTION	NM	LB-FT	LB-IN
Air Cleaner Outlet Pipe T-Connector bolt	10	7	-
Air Cleaner Outlet Pipe T-Connector clip	3.5	-	31
Air Cleaner Outlet clips	3.5	-	31
Supercharger retaining bolts	25	18	-
Charge air cooler lower assembly retaining bolts	25	18	-
Throttle body retaining studs	10	7	-
Charge air cooler top assembly retaining bolts	25	18	-
Manifold absolute pressure and temperature (MAPT) sensor	5	-	44
Coolant outlet pipe	11	8	-

INTAKE AIR DISTRIBUTION AND FILTERING – V8 S/C 5.0L PETROL

AIR CLEANER ELEMENT

(G1224274)

REMOVAL AND INSTALLATION

REMOVAL

NOTES:

- Removal steps in this procedure may contain installation details.
- Air cleaner elements must be renewed in pairs.

1. Disconnect the battery ground cable.
   Refer to: Specifications (414-00, Specifications).

2. **NOTES:**

   - Left-hand shown, right-hand similar.
   - Some variation in the illustrations may occur, but the essential information is always correct.

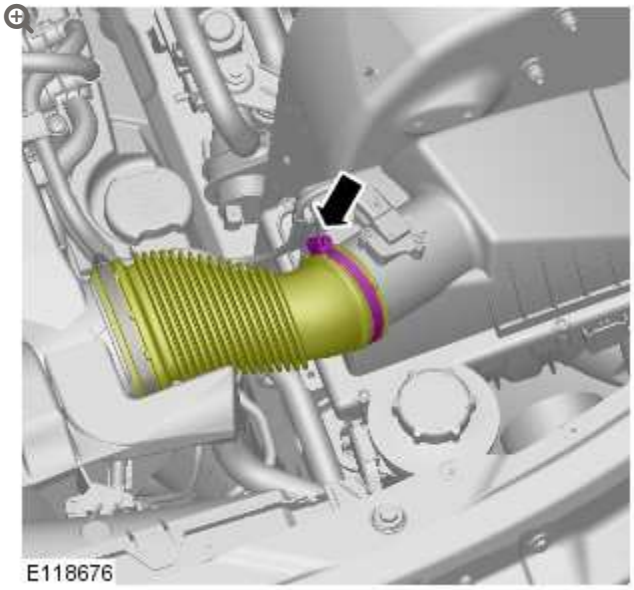

Torque: **3.5 Nm**

3.

NOTES:

- Left-hand shown, right-hand similar.
- Some variation in the illustrations may occur, but the essential information is always correct.

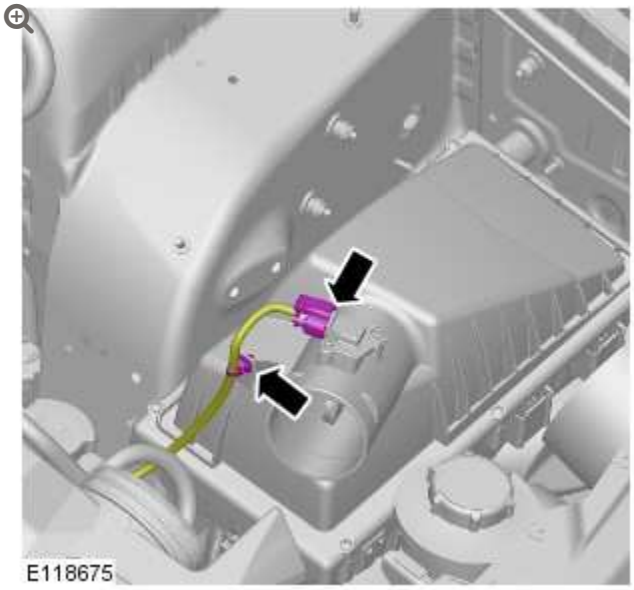

4.

NOTE:

Left-hand shown, right-hand similar.

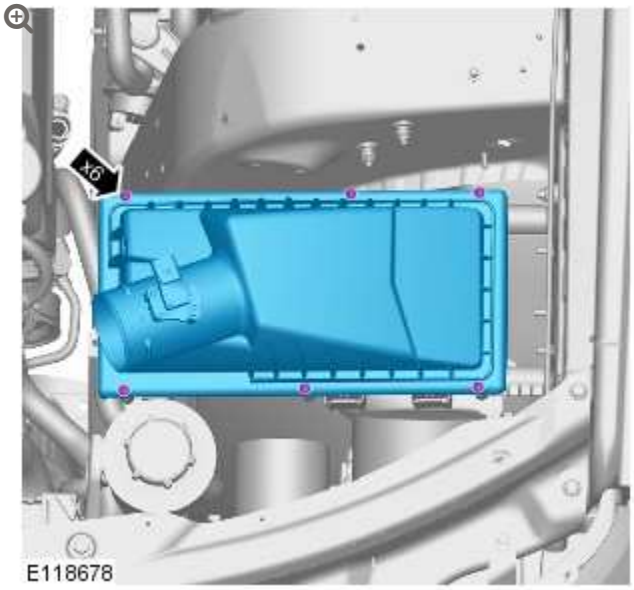

5.

NOTE:

Right-hand shown, left-hand similar.

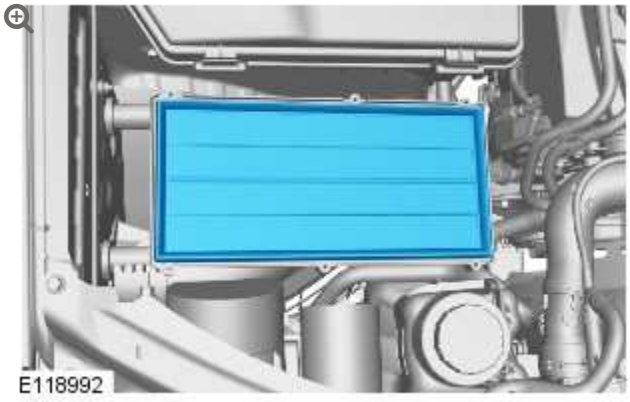

- Repeat the above procedure for the other side.

INSTALLATION

1. To install reverse the removal procedure.

INTAKE AIR DISTRIBUTION AND FILTERING – V8 S/C 5.0L PETROL

AIR CLEANER LH (G1224093)

REMOVAL AND INSTALLATION

19.10.03	AIR CLEANER – LH – RENEW	5000 CC, AJ V8	0.2	USED WITHINS	+

REMOVAL

NOTE:

Removal steps in this procedure may contain installation details.

1. **NOTE:**

   Some variation in the illustrations may occur, but the essential information is always correct.

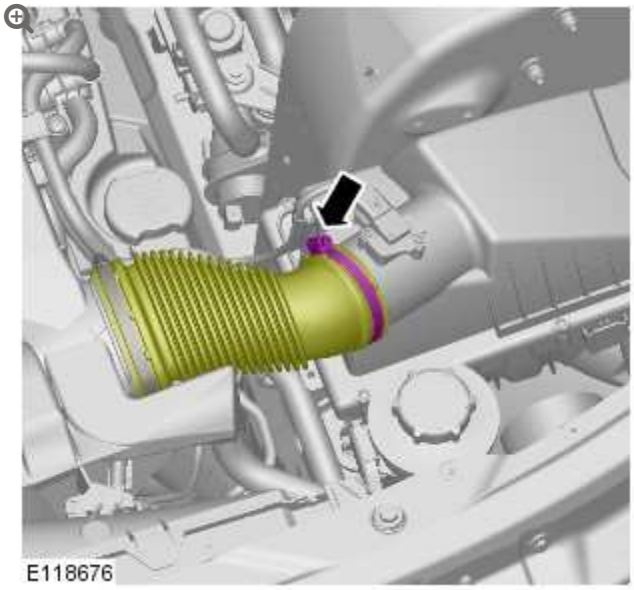

Torque: **3.5 Nm**

2.

NOTE:

Some variation in the illustrations may occur, but the essential information is always correct.

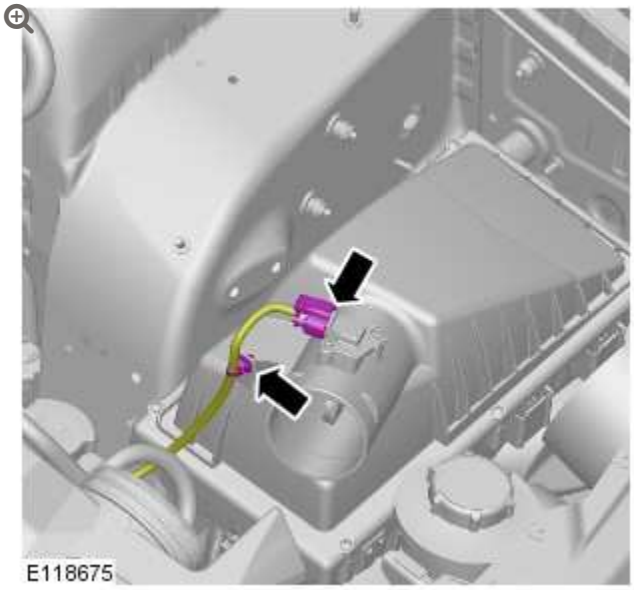

3.

NOTE:

Some variation in the illustrations may occur, but the essential information is always correct.



4.

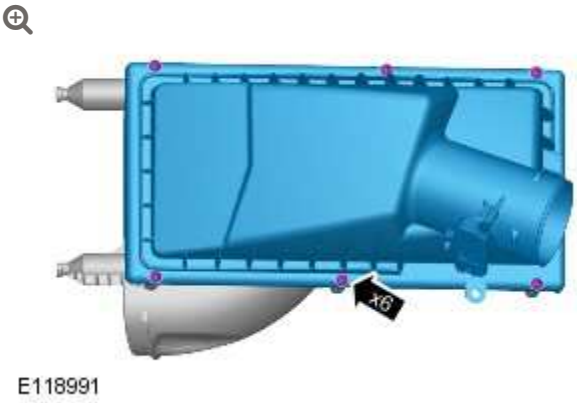

5.



E118990

INSTALLATION

1. To install reverse the removal procedure.

INTAKE AIR DISTRIBUTION AND FILTERING – V8 S/C 5.0L PETROL

AIR CLEANER OUTLET PIPE LH (G1224095)

REMOVAL AND INSTALLATION

19.10.21	PIPE – AIR CLEANER OUTLET – LH – RENEW	5000 CC, AJ V8	0.1	USED WITHINS	+

REMOVAL

NOTE:

Removal steps in this procedure may contain installation details.

1. Refer to: Engine Cover - 5.0L (501-05, Removal and Installation).

2.

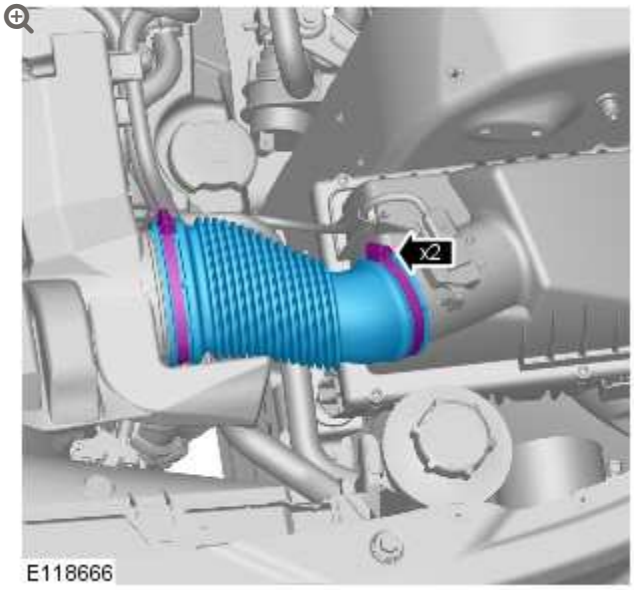

Torque: **3.5 Nm**

INSTALLATION

1. To install reverse the removal procedure.

INTAKE AIR DISTRIBUTION AND FILTERING – V8 S/C 5.0L PETROL

AIR CLEANER OUTLET PIPE RH (G1224096)

REMOVAL AND INSTALLATION

19.10.22	PIPE – AIR CLEANER OUTLET – RH – RENEW	5000 CC, AJ V8	0.1	USED WITHINS	+

REMOVAL

NOTE:

Removal steps in this procedure may contain installation details.

1. Refer to: Engine Cover - 5.0L (501-05, Removal and Installation).

2.

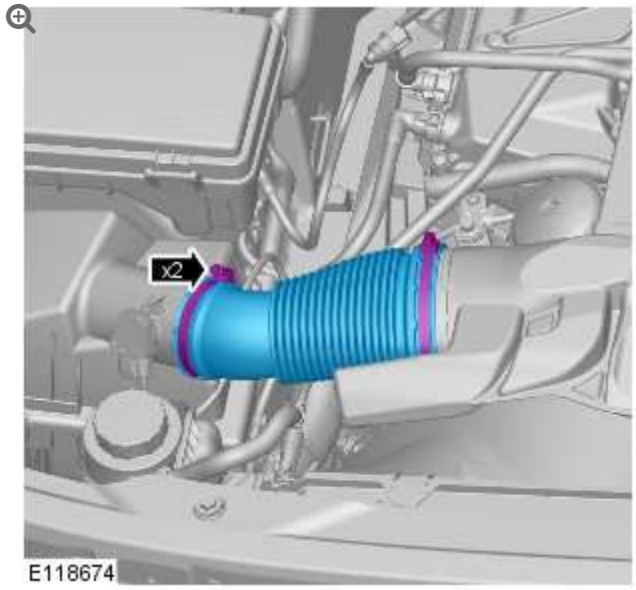

Torque: **3.5 Nm**

INSTALLATION

1. To install reverse the removal procedure.

INTAKE AIR DISTRIBUTION AND FILTERING – V8 S/C 5.0L PETROL

AIR CLEANER OUTLET PIPE T-CONNECTOR (G1224059)

REMOVAL AND INSTALLATION

19.10.24	T-CONNECTOR – AIR CLEANER OUTLET PIPE – RENEW	5000 CC, AJ V8, SUPERCHARGED	0.2	USED WITHINS	+

REMOVAL

NOTE:

Removal steps in this procedure may contain installation details.

1. Refer to: Engine Cover - 5.0L (501-05, Removal and Installation).

2.

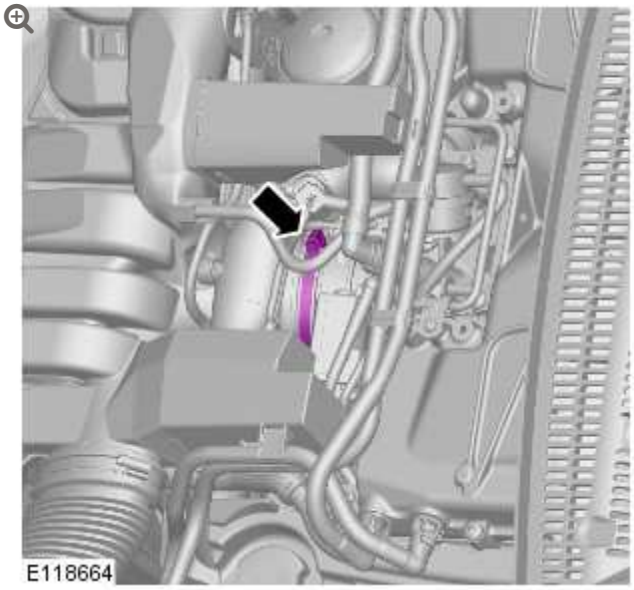

Torque: **3.5 Nm**

3.

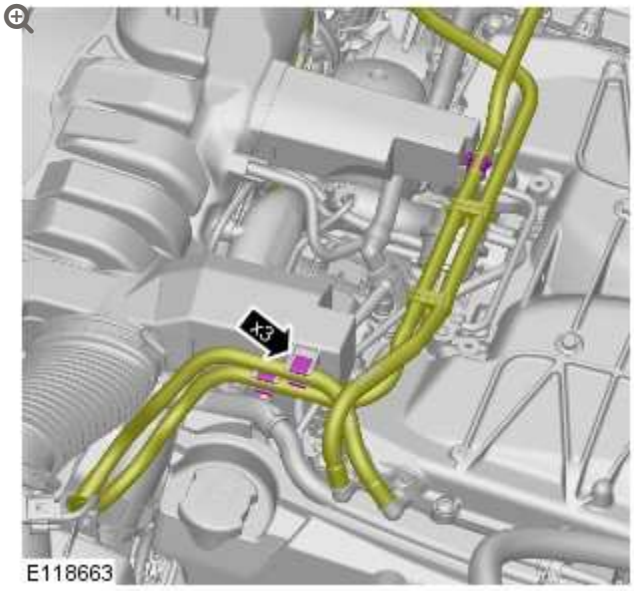

4.

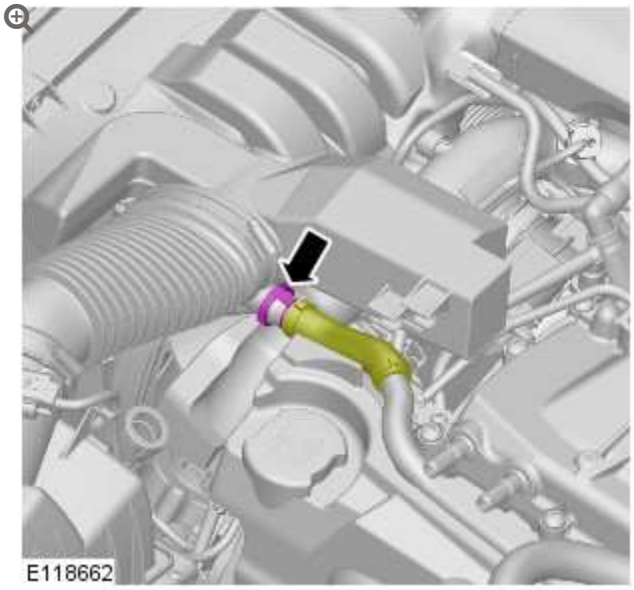

5.

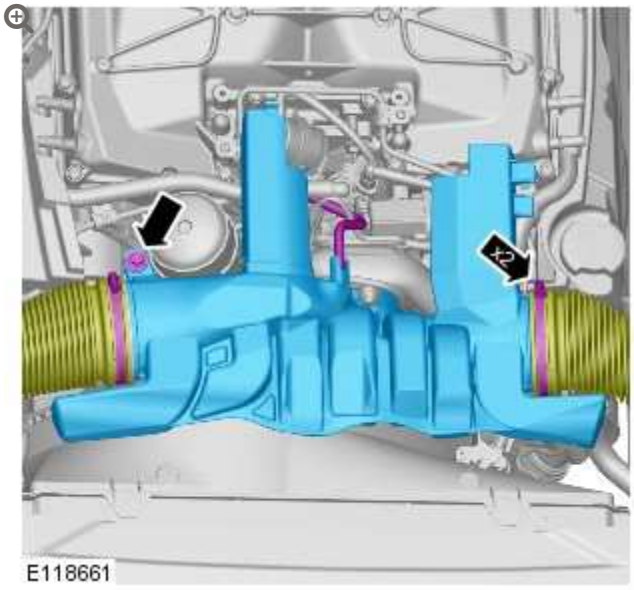

Torque:

M6 **10 Nm**

3.5 Nm

INSTALLATION

1. To install, reverse the removal procedure.

INTAKE AIR DISTRIBUTION AND FILTERING – V8 S/C 5.0L PETROL

AIR CLEANER RH (G1224094)

REMOVAL AND INSTALLATION

19.10.04	AIR CLEANER – RH – RENEW	5000 CC, AJ V8	0.3	USED WITHINS	+

REMOVAL

NOTE:

Removal steps in this procedure may contain installation details.

1. **NOTE:**

   Some variation in the illustrations may occur, but the essential information is always correct.

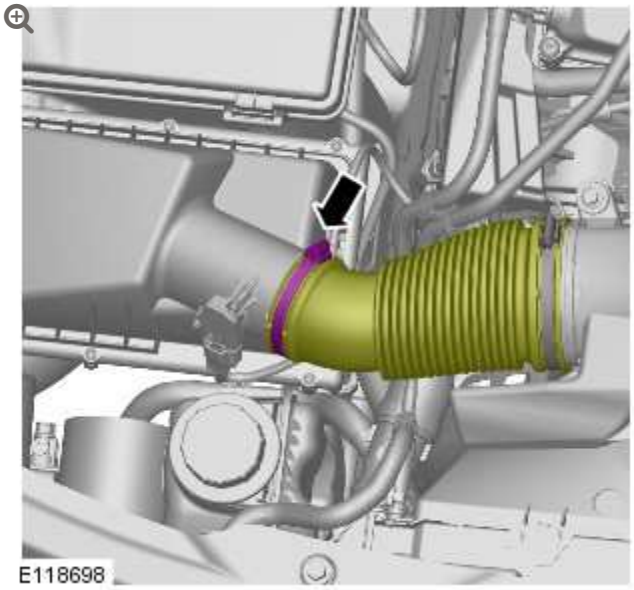

Torque: **3.5 Nm**

2.

NOTE:

Some variation in the illustrations may occur, but the essential information is always correct.

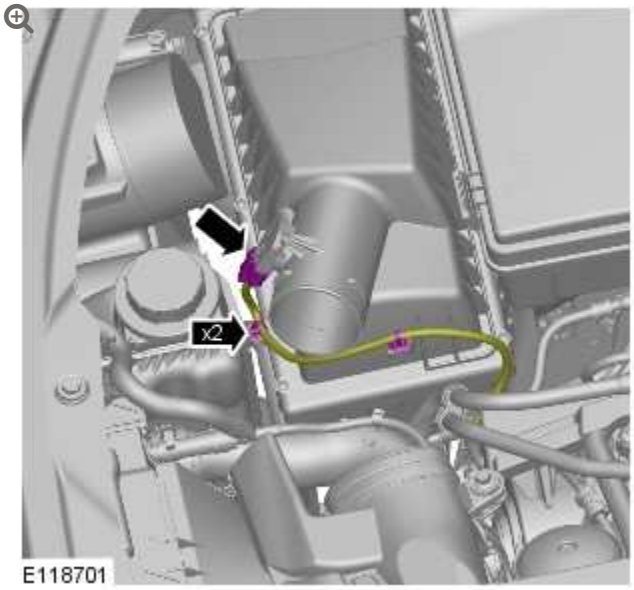

3.

NOTE:

Some variation in the illustrations may occur, but the essential information is always correct.

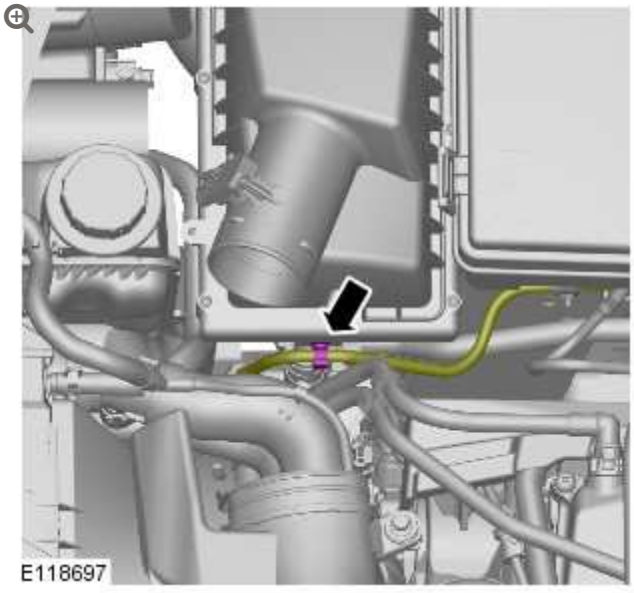

4.

NOTE:

Some variation in the illustrations may occur, but the essential information is always correct.

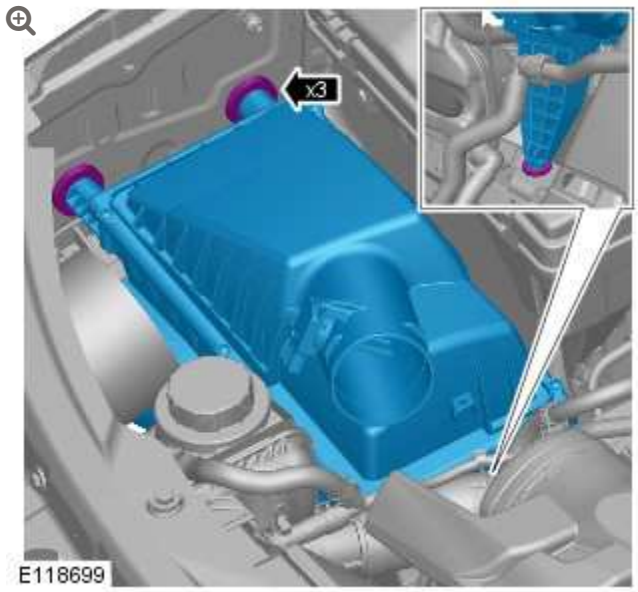

5.

NOTE:

Do not disassemble further if the component is removed for access only.

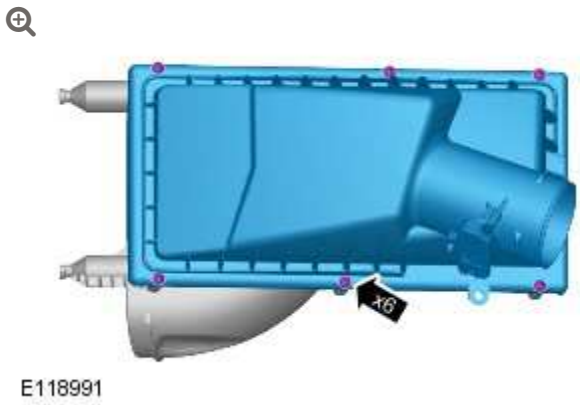

6.



E118990

INSTALLATION

1. To install reverse the removal procedure.

INTAKE AIR DISTRIBUTION AND FILTERING – V8 S/C 5.0L PETROL

CHARGE AIR COOLER (G1223972)

REMOVAL AND INSTALLATION

REMOVAL

NOTE:

Removal steps in this procedure may contain installation details.

1. Disconnect the battery ground cable.
   Refer to: Specifications (414-00 Battery and Charging System - General Information, Specifications).

2. **WARNING:**

   Make sure to support the vehicle with axle stands.

   Raise and support the vehicle.

3. Refer to: Cooling System Partial Draining and Vacuum Filling (303-03B, General Procedures).

4. Refer to: Engine Cover - V8 5.0L Petrol/V8 S/C 5.0L Petrol (501-05 Interior Trim and Ornamentation, Removal and Installation).

5. Refer to: Plenum Chamber (412-01A Air Distribution and Filtering, Removal and Installation).

6. Refer to: Fuel Injection Component Cleaning (303-04A Fuel Charging and Controls - V8 5.0L Petrol, General Procedures).

7. Refer to: Fuel System Pressure Release - V8 5.0L Petrol/V8 S/C 5.0L Petrol (310-00 Fuel System - General Information, General Procedures).

8. 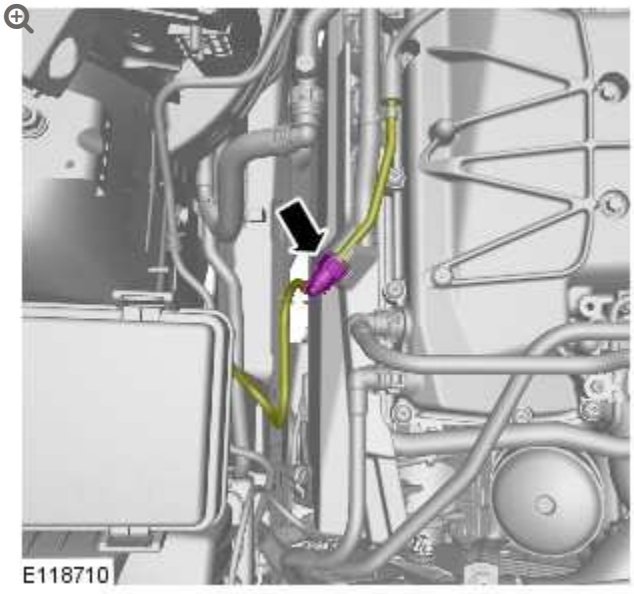

9.

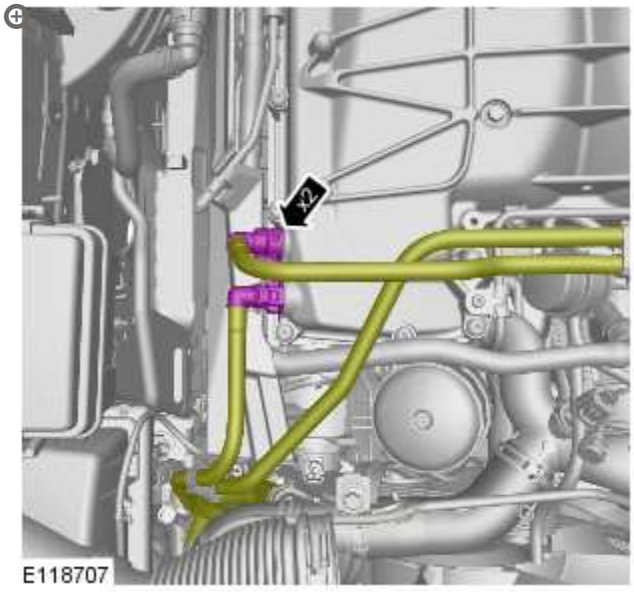

10.

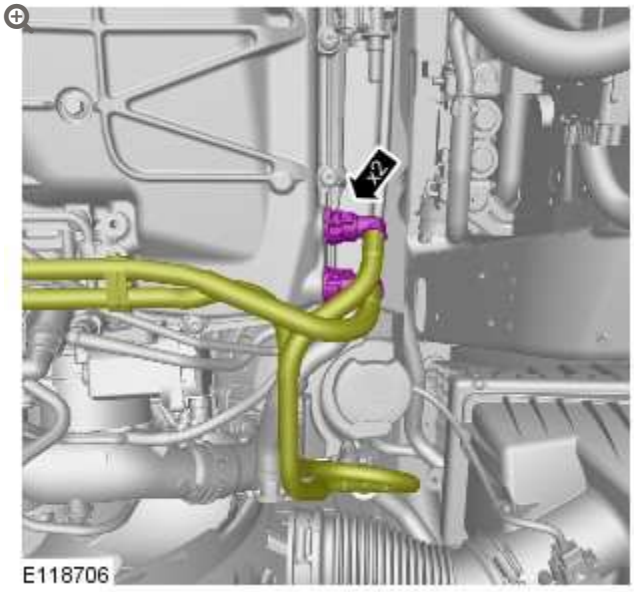

11.

CAUTION:

Be prepared to collect escaping fluids.

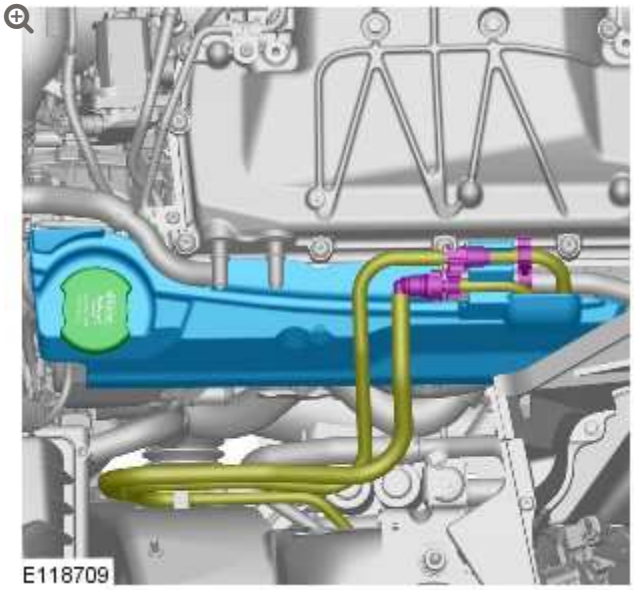

12.

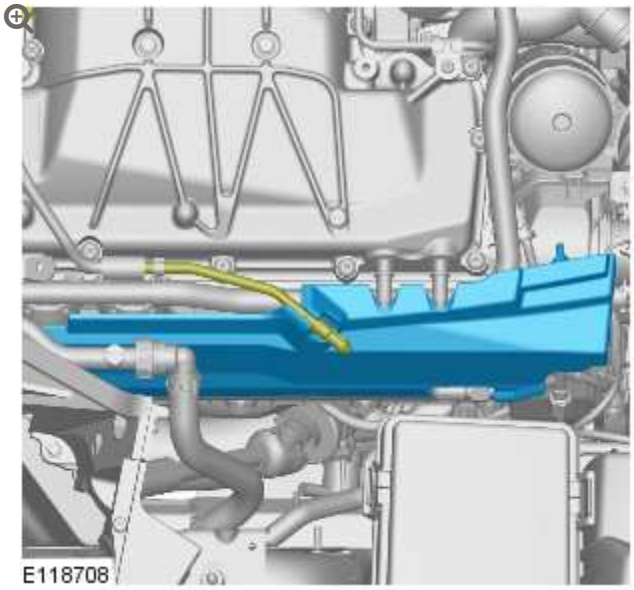

13.

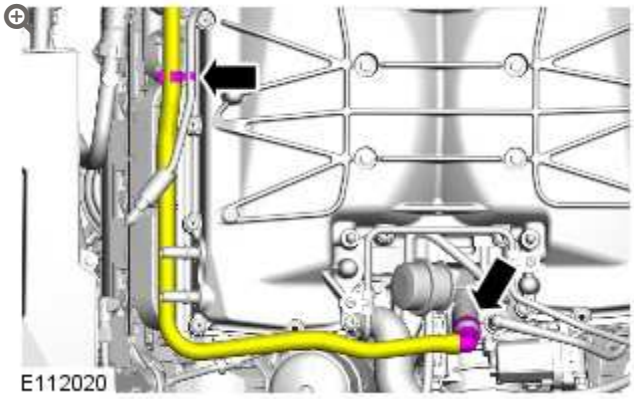

14.

WARNING:

Do not smoke or carry lighted tobacco or open flame of any type when working on or near any fuel related components. Highly flammable vapors are always present and may ignite. Failure to follow these instructions may result in personal injury.

CAUTIONS:

- Make sure that the fuel line union does not rotate.
- Be prepared to collect escaping fluids.
- Make sure that all openings are sealed. Use new blanking caps.

NOTE:

Some variation in the illustrations may occur, but the essential information is always correct.

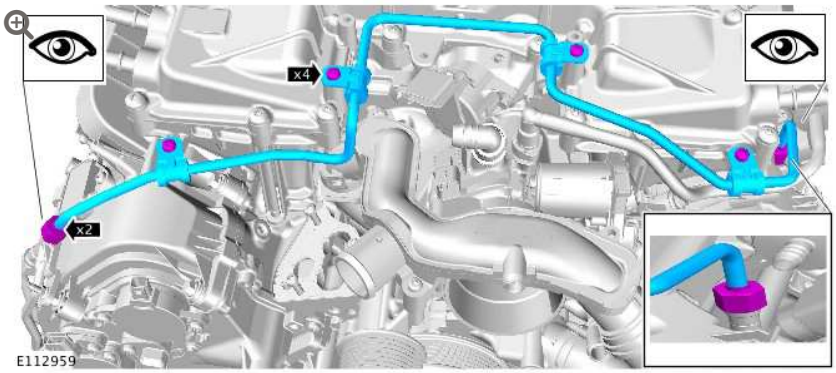

15.

NOTE:

Some variation in the illustrations may occur, but the essential information is always correct.

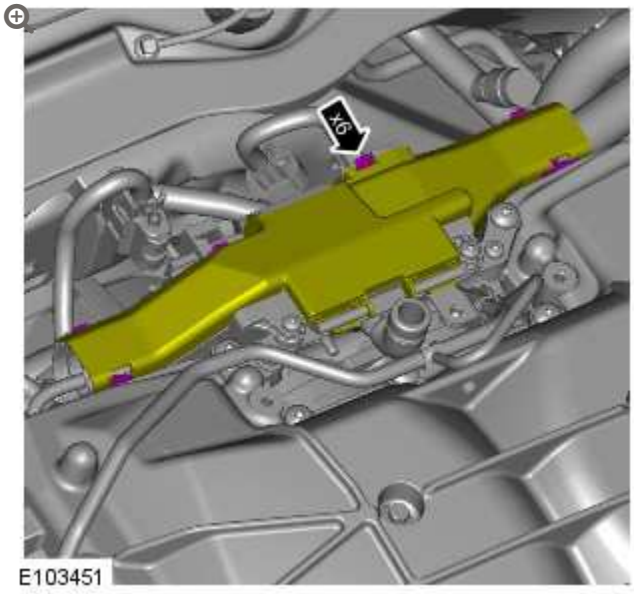

16.

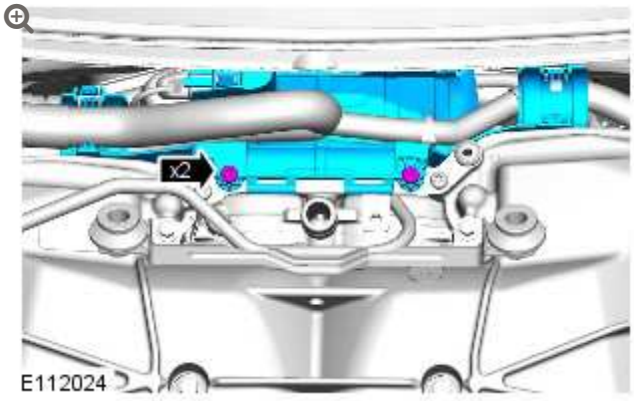

Torque: **10 Nm**

17.

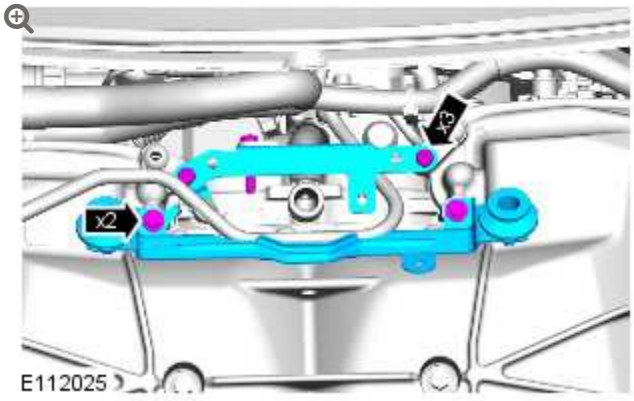

Torque: **10 Nm**

18.

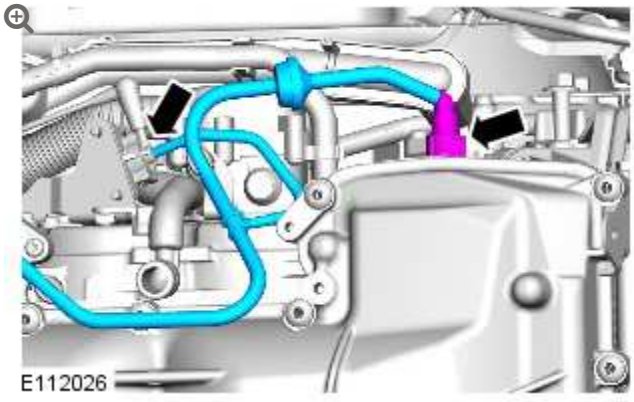

19.

NOTE:

Remove and discard the gasket.

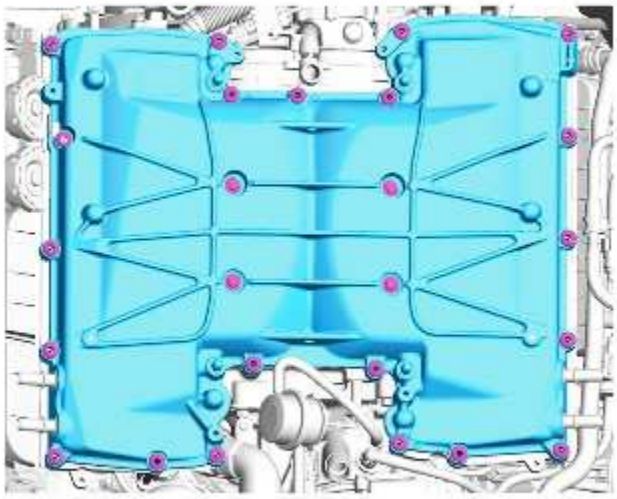

E120312

INSTALLATION

1. To install, reverse the removal procedure.

2. **NOTES:**

   - Install and finger tighten bolts in sequence illustrated.
   - Tighten the bolts in the indicated sequence.
   - Install a new gasket.

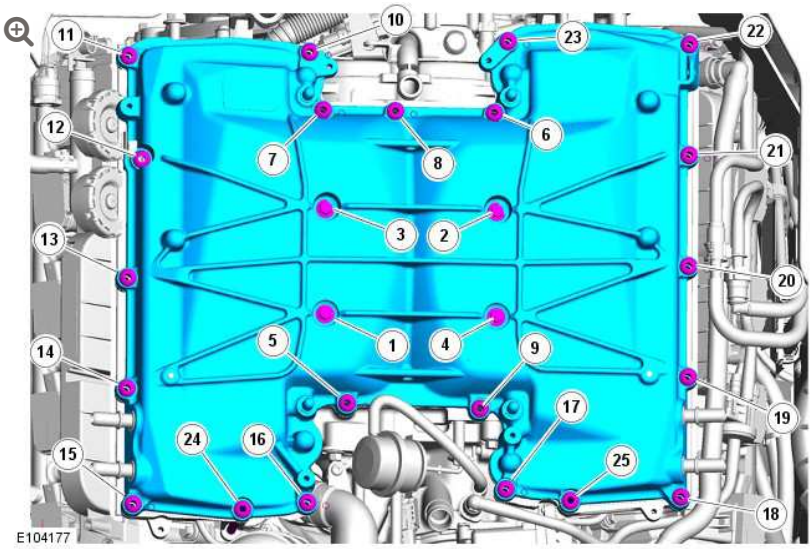

Torque: **25 Nm**

3.

WARNING:

Do not smoke or carry lighted tobacco or open flame of any type when working on or near any fuel related components. Highly flammable vapors are always present and may ignite. Failure to follow these instructions may result in personal injury.

CAUTION:

Lubricate only the union threads with clean engine oil.

NOTES:

- Do not tighten at this stage.
- Remove and discard the blanking caps.
- Some variation in the illustrations may occur, but the essential information is always correct.

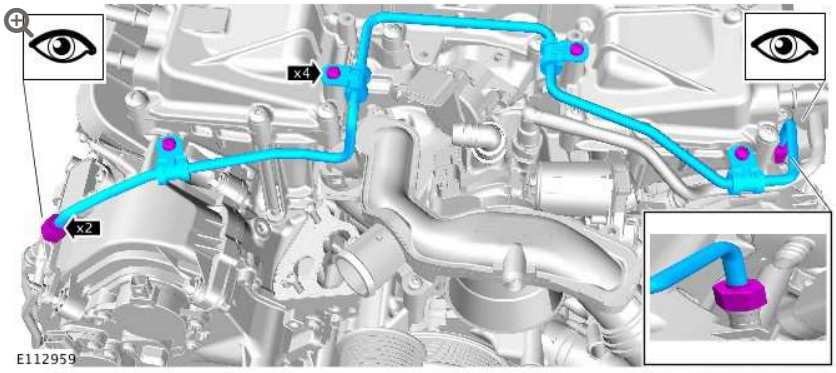

4.

WARNING:

Do not smoke or carry lighted tobacco or open flame of any type when working on or near any fuel related components. Highly flammable vapors are always present and may ignite. Failure to follow these instructions may result in personal injury.

NOTE:

Some variation in the illustrations may occur, but the essential information is always correct.

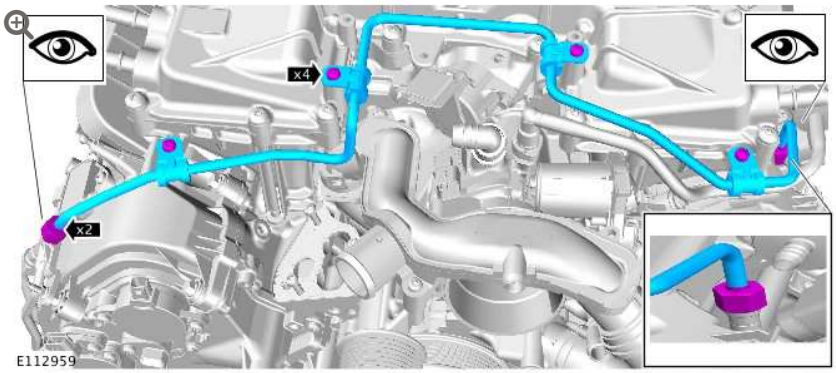

Torque:

Union **21 Nm**

M6 **12 Nm**

5.

WARNINGS:

- Do not smoke or carry lighted tobacco or open flame of any type when working on or near any fuel related components. Highly flammable vapors are always present and may ignite. Failure to follow these instructions may result in personal injury.
- After carrying out repairs, the fuel system must be checked visually for leaks. Failure to follow these instructions may result in personal injury.

NOTE:

Some variation in the illustrations may occur, but the essential information is always correct.

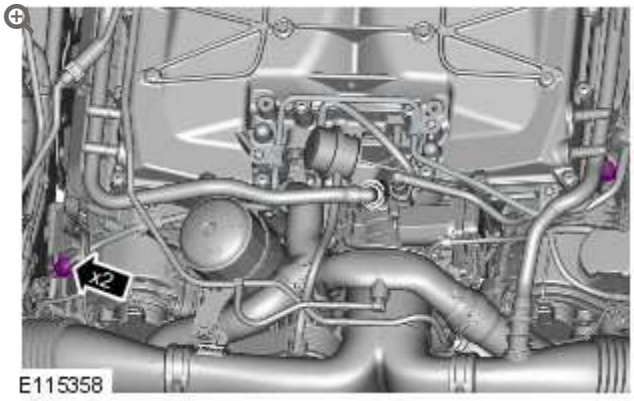

Torque: **21 Nm**

INTAKE AIR DISTRIBUTION AND FILTERING – V8 S/C 5.0L PETROL

DIAGNOSIS AND TESTING

PRINCIPLES OF OPERATION

For a detailed description of the intake air distribution and filtering system and operation, refer to the relevant Description and Operation section in the Workshop Manual.

INSPECTION AND VERIFICATION

CAUTION:

Diagnosis by substitution from a donor vehicle is NOT acceptable. Substitution of control modules does not guarantee confirmation of a fault, and may also cause additional faults in the vehicle being tested and/or the donor vehicle.

1. Verify the customer concern.
2. Visually inspect for obvious signs of mechanical or electrical damage.

Visual Inspection

MECHANICAL	ELECTRICAL
▪ Hoses and ducts: condition and installation ▪ Air cleaner element condition and installation ▪ Restricted air intake ▪ Vacuum hoses condition and installation ▪ Pipework to/from supercharger: condition and installation ▪ Supercharger: condition and installation ▪ Charge air coolers	▪ Fuse(s) ▪ Wiring harness(es) ▪ Loose or corroded electrical connector(s) ▪ Mass air flow (MAF) sensors ▪ Manifold absolute pressure and temperature (MAPT) sensor ▪ Intake air temperature (IAT) sensor ▪ The IAT sensor is built into the right-hand MAF sensor

3. If an obvious cause for an observed or reported concern is found, correct the cause (if possible) before proceeding to the next step.

4. If the cause is not visually evident, verify the symptom and refer to the Symptom Chart, alternatively check for Diagnostic Trouble Codes (DTCs) and refer to the DTC Index.

SYMPTOM CHART

SYMPTOM	POSSIBLE CAUSES	ACTION
Vehicle does not start/hard starting	▪ Restricted/blocked air intake ▪ Restricted/blocked air cleaner element	Check the intake air system for blockages or restriction. Rectify as necessary.
Poor performance	▪ Intake air system fault ▪ Supercharger fault ▪ Low fuel pressure	Check the intake air system for blockages or restriction. Rectify as necessary. Check for DTCs indicating a

SYMPTOM	POSSIBLE CAUSES	ACTION
	▪ Restricted exhaust system	supercharger or fuel pressure fault. Rectify as necessary. Check the exhaust system for evidence of damage or restriction. Rectify as necessary.
Excessive intake noise	▪ Intake air leak after the supercharger ▪ Intake pipe disconnected/damaged after the air cleaner ▪ Air cleaner assembly incorrectly assembled/damaged	Check the intake air system for loose or disconnected hoses or ducts. Check the hoses and ducts for damage, splits, etc. Rectify as necessary.

DTC INDEX

For a list of Diagnostic Trouble Codes (DTCs) that could be logged on this vehicle, please refer to Section 100-00. REFER to: Diagnostic Trouble Code (DTC) Index - V8 S/C 5.0L Petrol, DTC: Engine Control Module (ECM) (100-00 General Information, Description and Operation).

2012.0 RANGE ROVER (LM), 303-12

INTAKE AIR DISTRIBUTION AND FILTERING – V8 S/C 5.0L PETROL

DESCRIPTION AND OPERATION

COMPONENT LOCATION

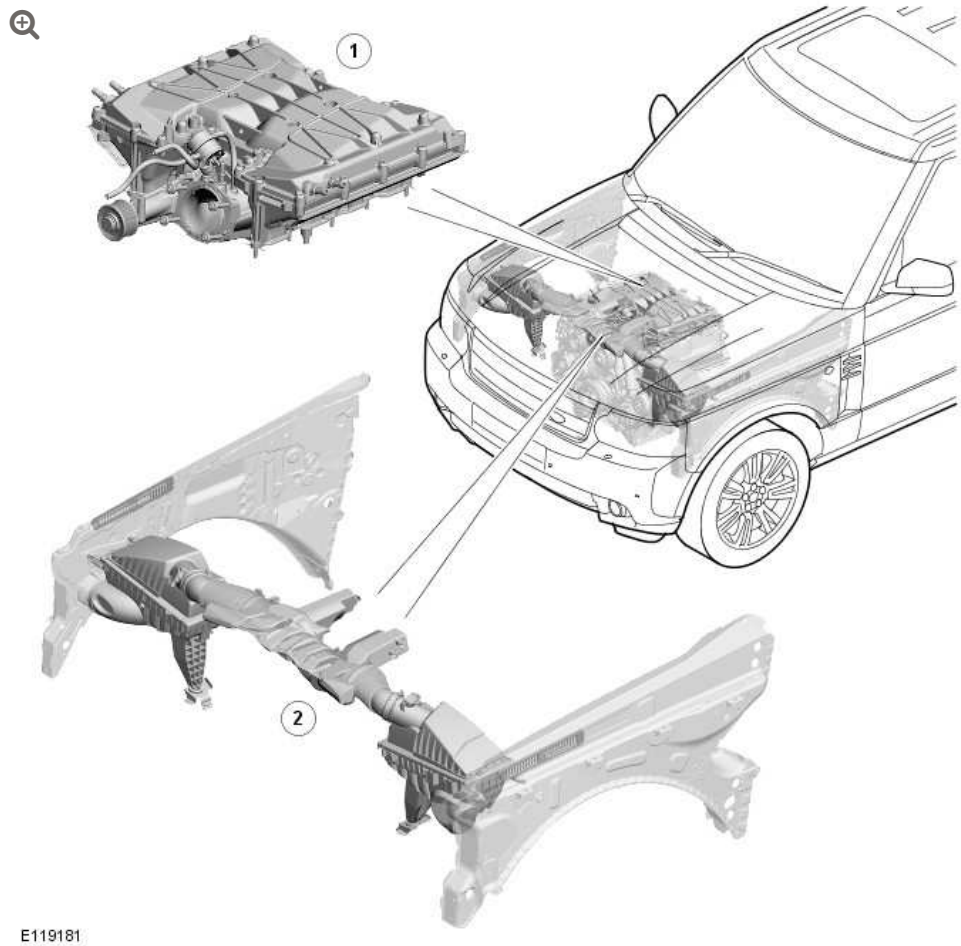

ITEM	DESCRIPTION
1	Supercharger and intake manifolds
2	Air intakes, air cleaners and air ducts

INTRODUCTION

The intake air distribution and filtering system comprises:

- Dual air intakes, air cleaners and air ducts.
- A supercharger and intake manifolds.

AIR INTAKES, AIR CLEANERS AND AIR DUCTS

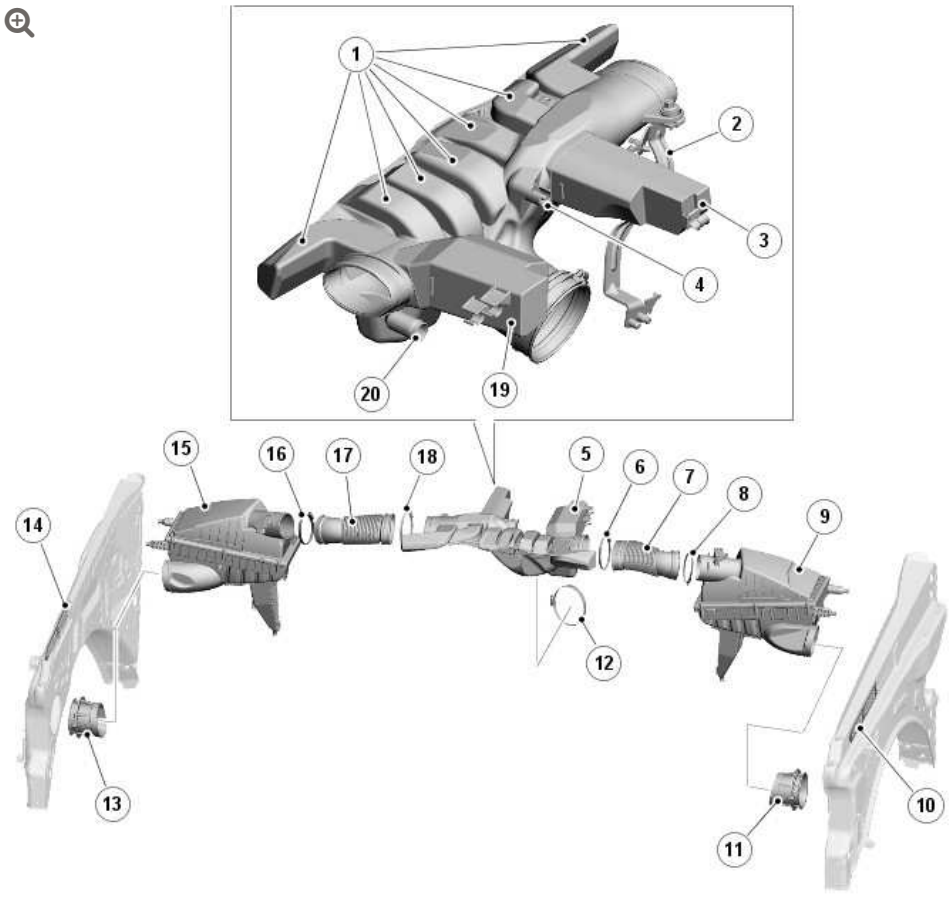

E119182

ITEM	DESCRIPTION

ITEM	DESCRIPTION
1	Resonators
2	Mounting grommet and bracket
3	Resonator
4	Connector stub for vacuum tube of S/C (supercharger) bypass valve actuator
5	Clean air duct
6	Hose clamp
7	LH (left hand) clean air convolute
8	Hose clamp
9	LH air cleaner
10	LH air intake
11	LH dirty air duct
12	Hose clamp
13	RH (right hand) dirty air duct
14	RH air intake
15	RH air cleaner
16	Hose clamp
17	RH clean air convolute
18	Hose clamp
19	Resonator
20	Full load breather connector stub

Air is supplied to the air cleaners, from under the sides of the hood, through the air intakes, the front fender aprons and the dirty air ducts.

The air cleaners are located in the engine compartment, forward of the suspension housings. Three isolators locate each air cleaner to a bracket on the related front side member and front fender apron.

Each air cleaner consists of an air cleaner element installed in a tray and enclosed with a cover secured by six screws. Air inlet and outlet connections are incorporated into the tray and cover respectively. The bottom of the tray incorporates a drain valve to prevent the accumulation of water in the air cleaner. The air outlet connection incorporates a MAFT (mass air flow and temperature) sensor.

Air Cleaner

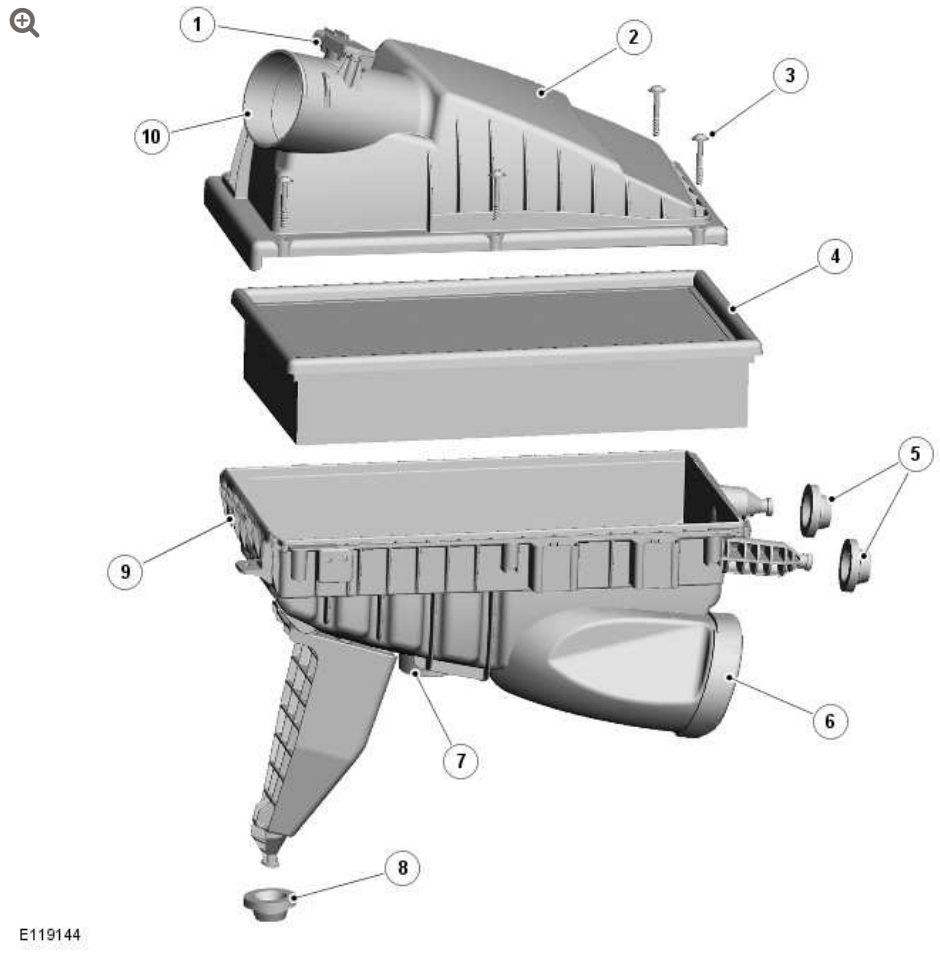

ITEM	DESCRIPTION
1	MAFT sensor
2	Cover
3	Screw (6 off)
4	Air cleaner element
5	Isolators

ITEM	DESCRIPTION
6	Inlet connection
7	Drain valve
8	Isolator
9	Tray
10	Outlet connection

The clean air convolutes and the clean air duct direct the air from the air cleaners into the electric throttle. Hose clamps connect the clean air convolutes and the clean air duct together, and to the air cleaners and the electric throttle.

The clean air duct also incorporates the following:

- Resonators, to reduce air induction noise.
- A connector stub for the engine full load breather pipe.

The clean air duct is supported by a bracket attached to the RH (right-hand) cylinder head.

SUPERCHARGER AND INTAKE MANIFOLDS

The SC (supercharger) increases the pressure, and thus mass, of the air supplied to the engine, to increase the engine's power output. Two separate intake manifolds direct air from the SC to the cylinder inlet ports.

The intake manifolds are attached to their related cylinder heads and the sides of the SC. Two dowels locate the SC in position on the cylinder block. A charge air cooler tank top is installed on top of the SC and intake manifolds to form the air duct from the SC outlet to the intake manifolds. A charge air cooler is installed in each intake manifold.

The charge air cooler tank top incorporates four studs for the attachment of the engine cover. A NVH (noise, vibration and harshness) pad is attached to the side of each intake manifold.

Supercharger and Intake Manifolds - Assembled

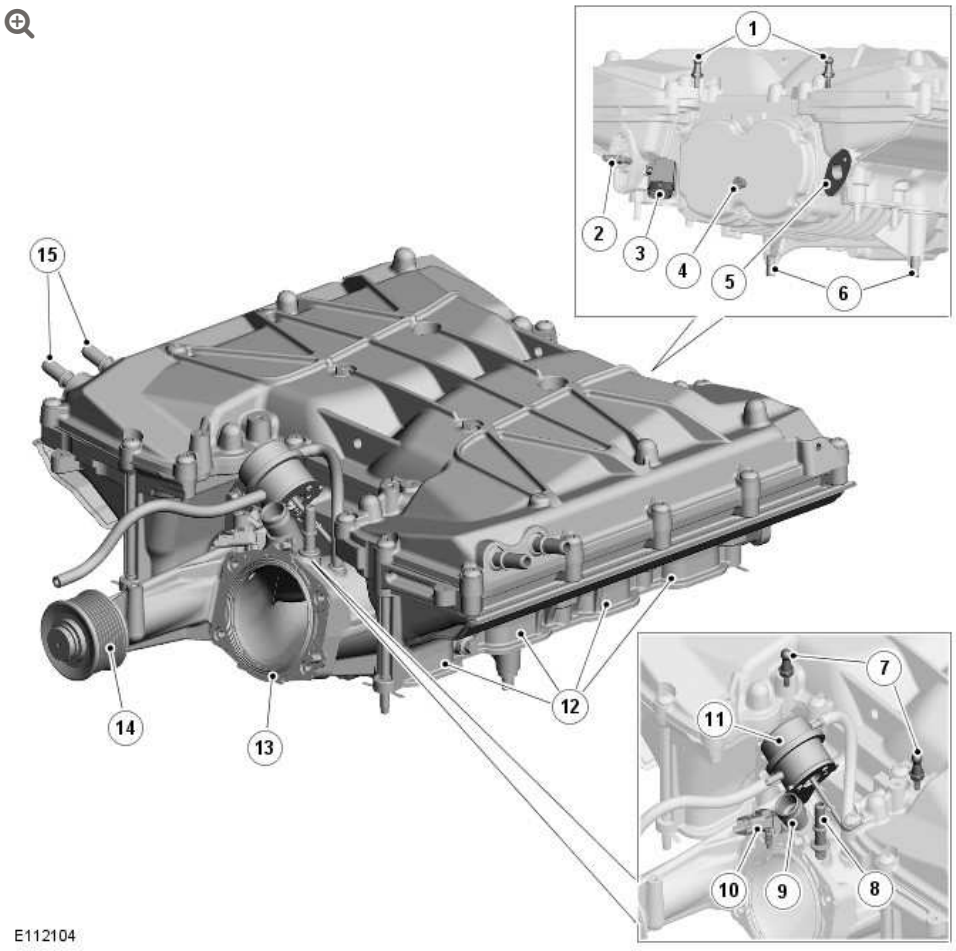

ITEM	DESCRIPTION
1	Engine cover rear attachment points
2	Vacuum connector stub
3	MAPT (manifold absolute pressure and temperature) sensor
4	SC filler/level plug
5	Symposer inlet pipe connection
6	Dowels
7	Engine cover front attachment points

ITEM	DESCRIPTION
8	EVAP (evaporative emissions) connector stub
9	Part load breather connector stub
10	MAP (manifold absolute pressure) sensor
11	Bypass valve pneumatic actuator
12	Outlet ports
13	Inlet port
14	Pulley
15	Coolant inlet and outlet connections

Supercharger and Intake Manifolds - Exploded

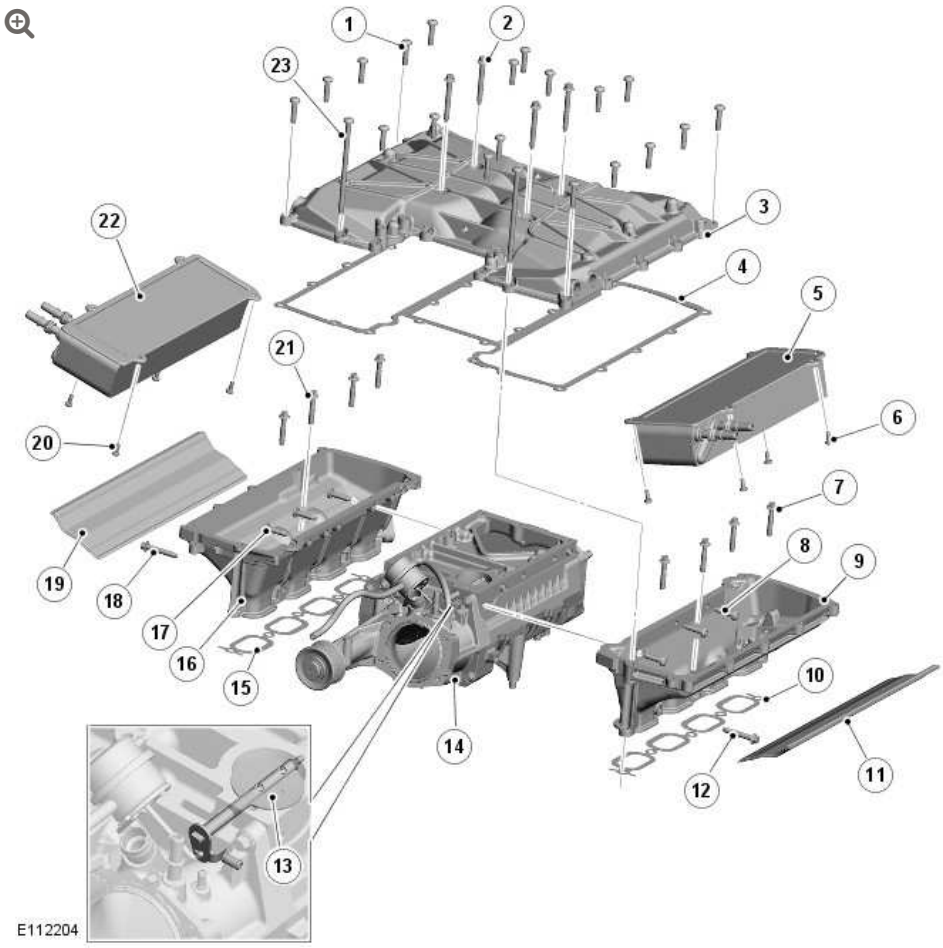

ITEM	DESCRIPTION
1	M08 x 35 mm screw (19 off)

ITEM	DESCRIPTION
2	M08 x 65 mm screw (4 off)
3	Charge air cooler tank top
4	Gasket
5	LH charge air cooler
6	M6 x 15 mm screw (4 off)
7	M08 x 45 mm screw (4 off)
8	M08 x 30 mm crew (3 off)
9	LH intake manifold
10	Gasket
11	NVH pad
12	M08 x 50 mm screw
13	Bypass valve
14	SC
15	Gasket
16	RH intake manifold
17	M08 x 30 mm crew (3 off)
18	M08 x 50 mm screw
19	NVH pad
20	M6 x 15 mm screw (4 off)
21	M08 x 45 mm screw (4 off)
22	RH charge air cooler
23	M08 x 150 mm screw

SUPERCHARGER

The SC is a Roots blower with high angle helix rotors driven at 2.1 x engine speed by the secondary belt of the accessory drive.

The two rotors of the SC are contained in a housing. The ends of the rotors are supported in bearings in the front cover and the bearing plate. A rear cover seals the bearing plate and incorporates a filler/level plug for lubricant. A pulley transfers power from the accessory drive to the shaft of one of the rotors.

A pneumatic actuator on the front cover is attached to a by-pass valve in the housing. The bypass valve regulates a flow of air from the outlet of the SC back to the inlet side of the rotors, to control the outlet pressure of the SC. Hoses connect the pneumatic actuator to the throttle T-piece of the air ducts, upstream of the electric throttle, and to the front cover, downstream of the electric throttle. A lever connects the actuating rod of the pneumatic actuator to the shaft of the bypass valve. A screw in the front cover limits movement of the lever in the closed direction to allow calibration of the SC output.

The front cover also incorporates:

- The SC air inlet and mounting face for the electric throttle.
- A connector stub for the part load breather.
- A MAP (manifold absolute pressure) sensor.
- A connector stub for a hose from the EVAP (evaporative emission) canister purge valve.

INTAKE MANIFOLDS

Each intake manifold is attached to the SC with three screws and a bolt. Two dowels ensure correct alignment of each intake manifold. The RHD (right-hand drive) intake manifold incorporates a connection port for the symposer, which, although fitted, is inactive on this vehicle. The LH (left-hand) intake manifold incorporates:

- A connector stub for the brake vacuum system.
- A MAPT (manifold absolute pressure and temperature) sensor.

SUPERCHARGER

At closed or partially open throttle positions, the bypass valve is fully open, allowing a flow of air from the SC outlet back to the inlet side. This results in little or no pressure increase across the SC. Progressive opening of the throttle reduces the depression downstream of the electric throttle. This is sensed by the pneumatic actuator, which moves to close the bypass valve. As the bypass valve closes there is a corresponding increase in the outlet pressure from the SC, which increases engine power output.

INTAKE AIR DISTRIBUTION AND FILTERING – V8 S/C 5.0L PETROL

SUPERCHARGER SPRING ISOLATOR (G1702598)

REMOVAL AND INSTALLATION

REMOVAL

CAUTION:

Make sure that all open ports are covered to prevent any foreign material ingress.

NOTE:

Some variation in the illustrations may occur, but the essential information is always correct.

1. **WARNING:**

   Make sure to support the vehicle with axle stands.

   Raise and support the vehicle.

2. Refer to: Supercharger (303-12B Intake Air Distribution and Filtering - V8 S/C 5.0L Petrol, Removal and Installation).

3. 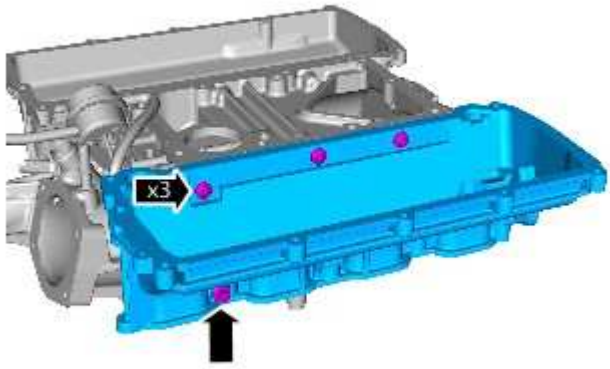

E160352

4. **NOTES:**

- Note the orientation prior to removal.
- Hoses must be cut off to prevent damage to the actuator.

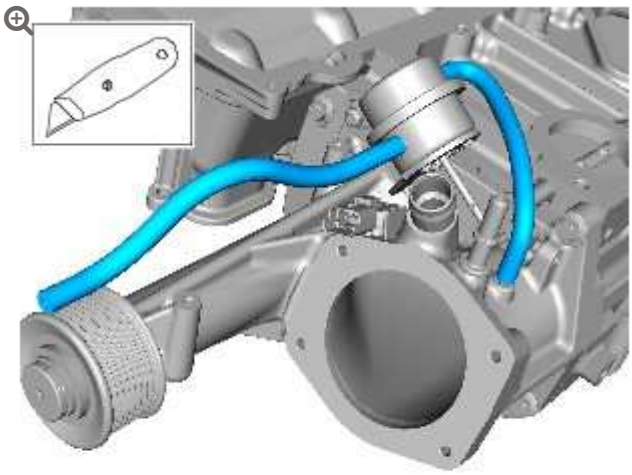

E160350

5.

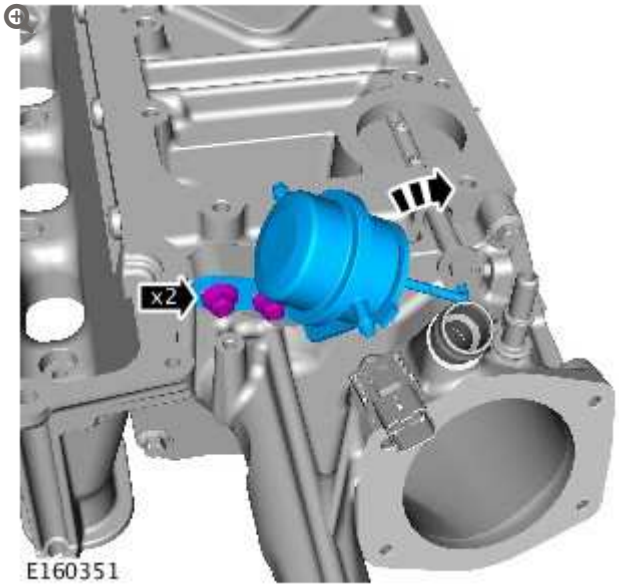

E160351

6.

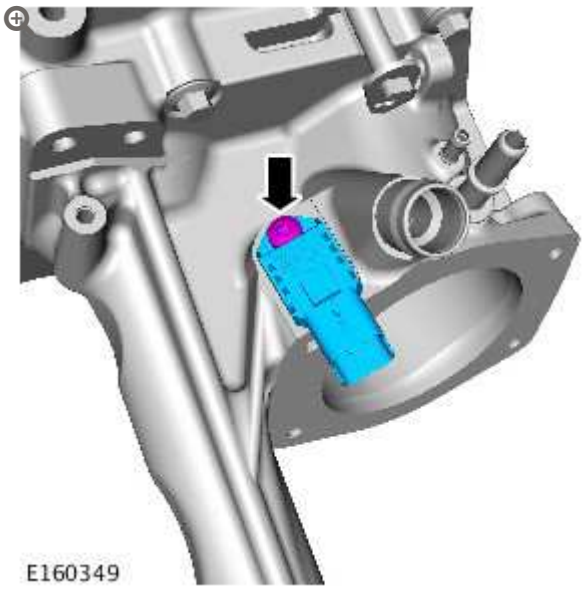

7.

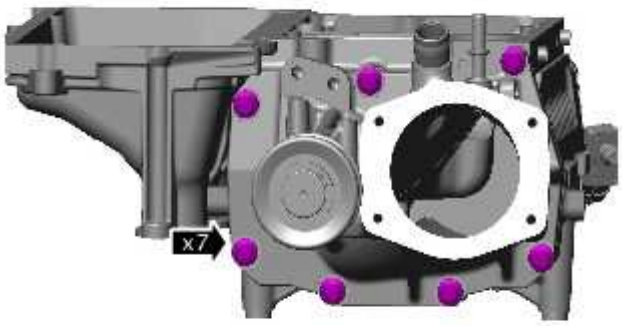

E160344

8.

CAUTION:

Make sure the actuator arm is rotated to allow the front cover to be removed. Failure to follow this instruction may result in damage to the component.

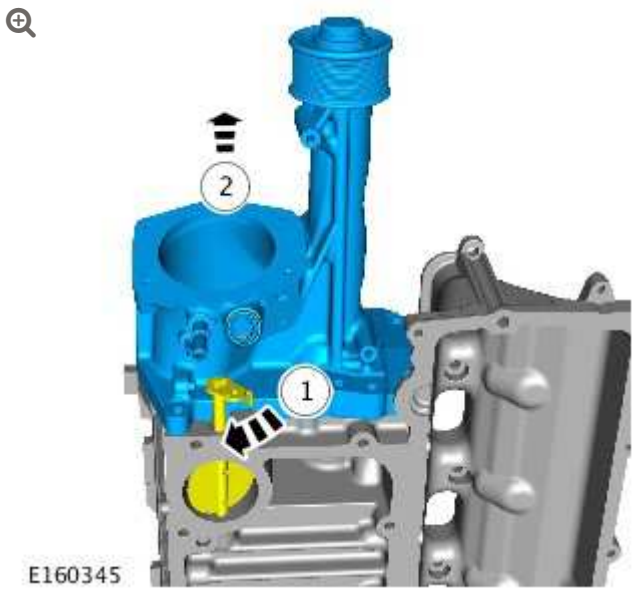

9.

CAUTION:

Make sure that all open ports are covered to prevent any foreign material ingress.

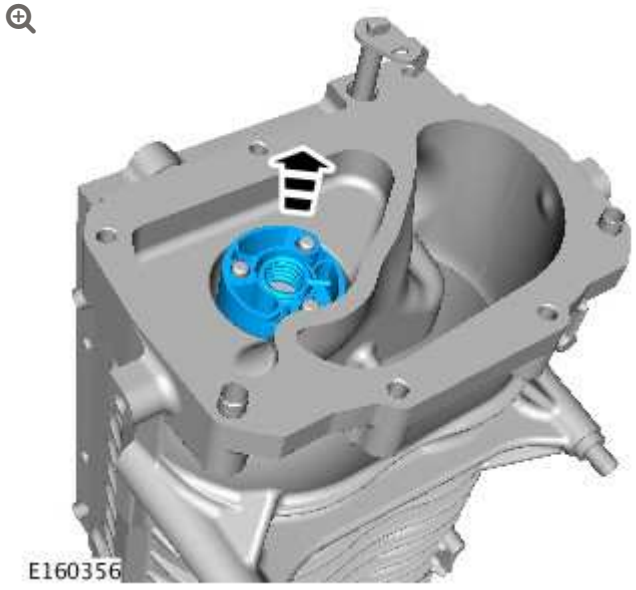

10.

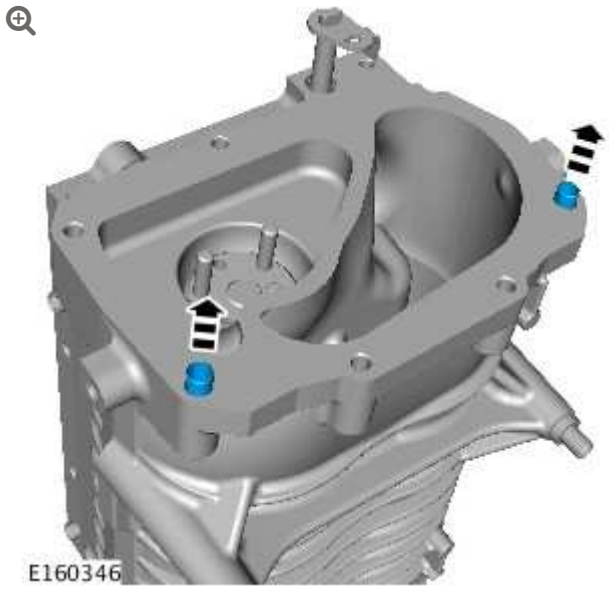

11.

CAUTION:

Make sure that all open ports are covered to prevent any foreign material ingress.

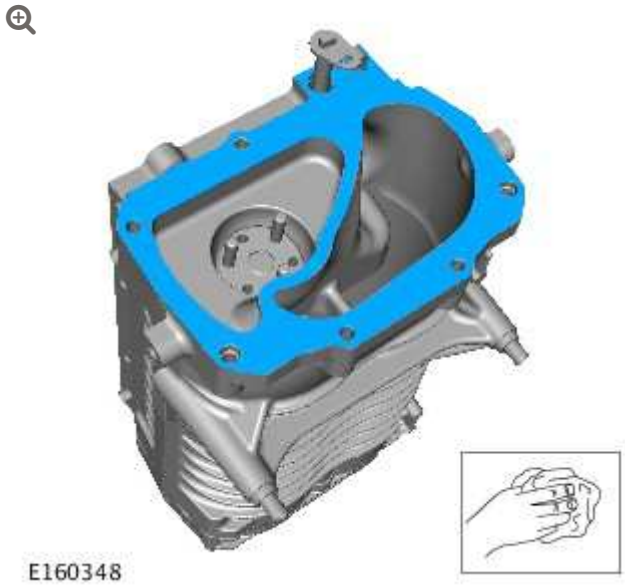

INSTALLATION

1. **CAUTION:**

Make sure that all open ports are covered to prevent any foreign material ingress.

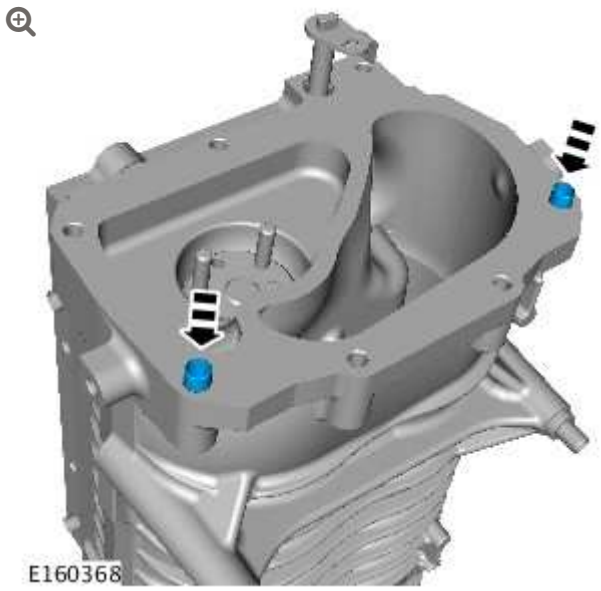

2. **CAUTION:**

Apply a continuous bead of gasket sealant as shown on the illustration. The application of the sealant must be 1mm diameter. Install the component immediately after applying the sealant without smearing the sealant.

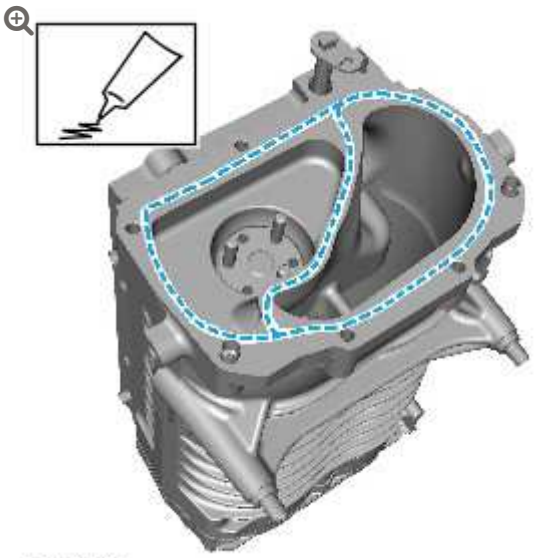

E160360

3.

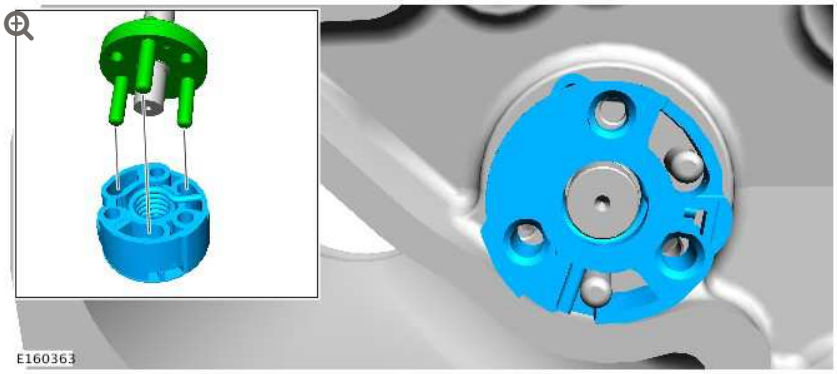

E160363

4.

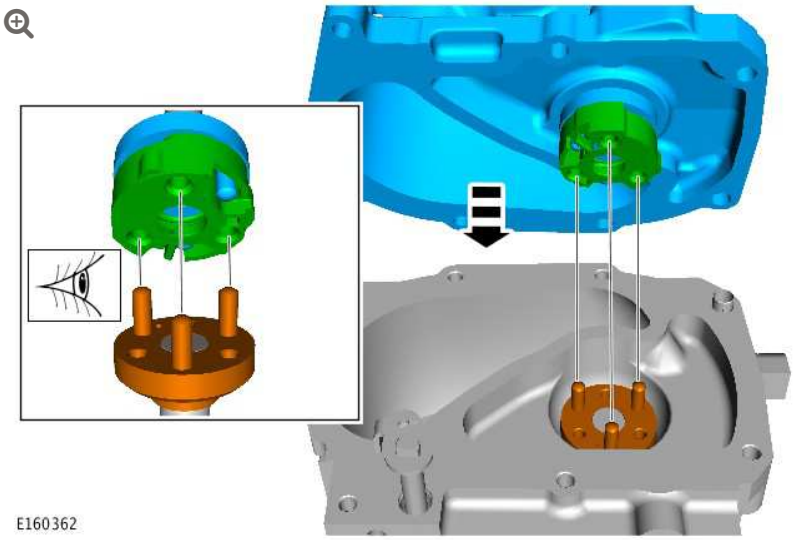

E160362

5.

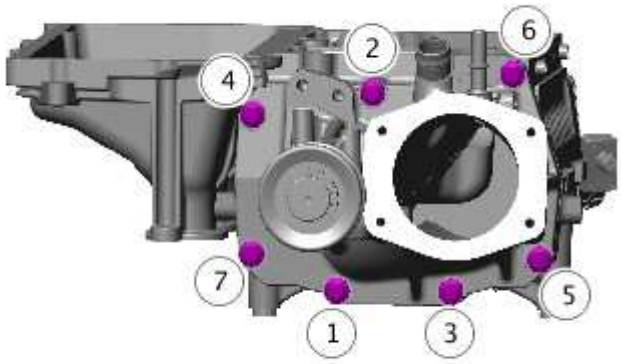

E160365

Torque: **27 Nm**

6.

NOTE:

Loosen the adjustment screw.

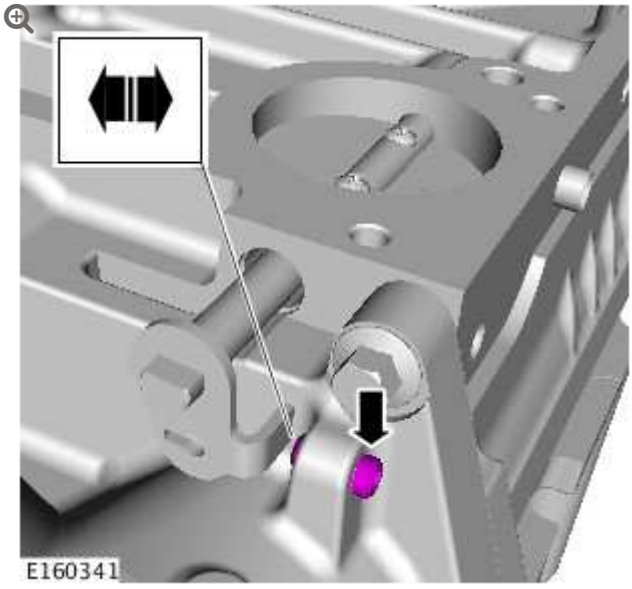

E160341

7.

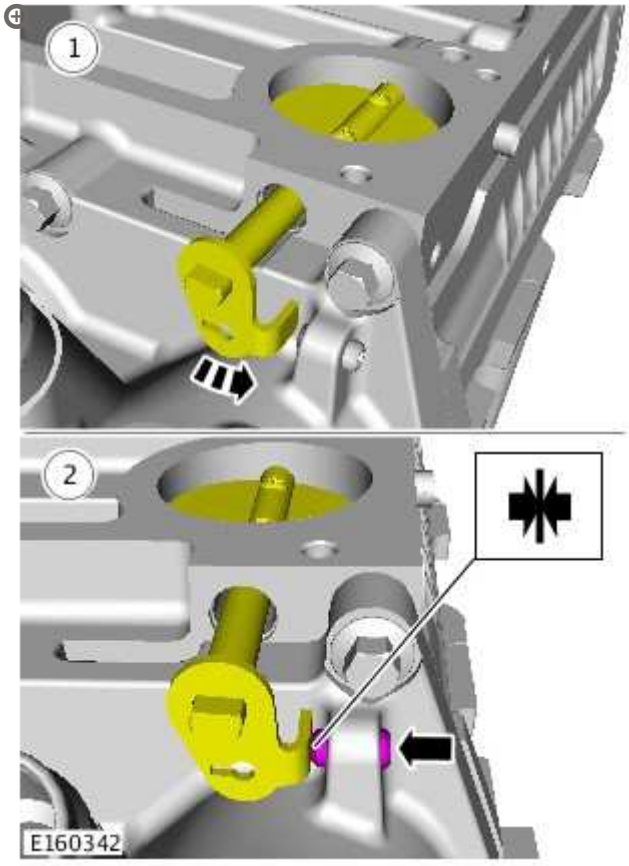

1. Using light pressure rotate the arm counter clockwise and hold.
2. Tighten the adjustment screw until no gap is visible.

8.

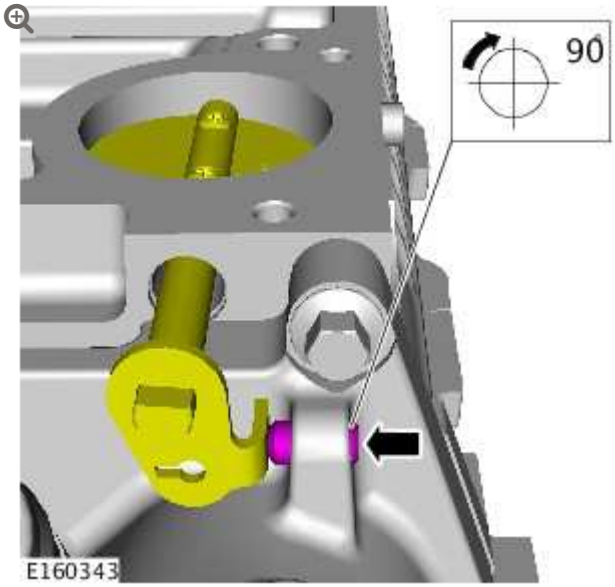

9.

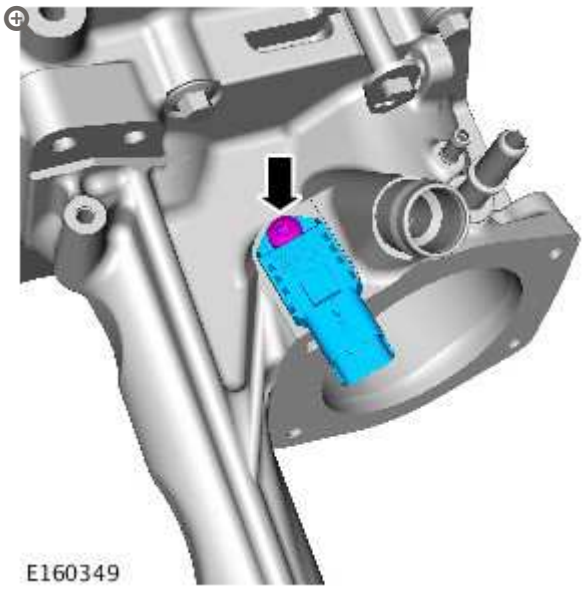

Torque: **5 Nm**

10.

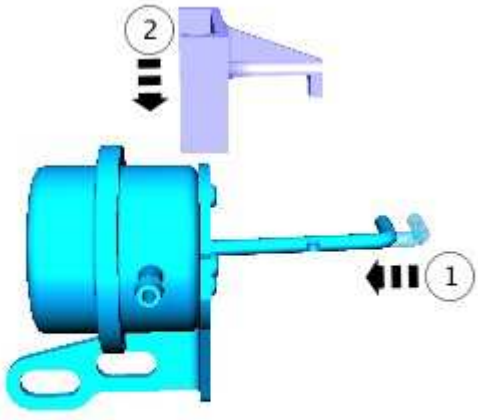

Assemble the installation tool, supplied, to the actuator.

11.

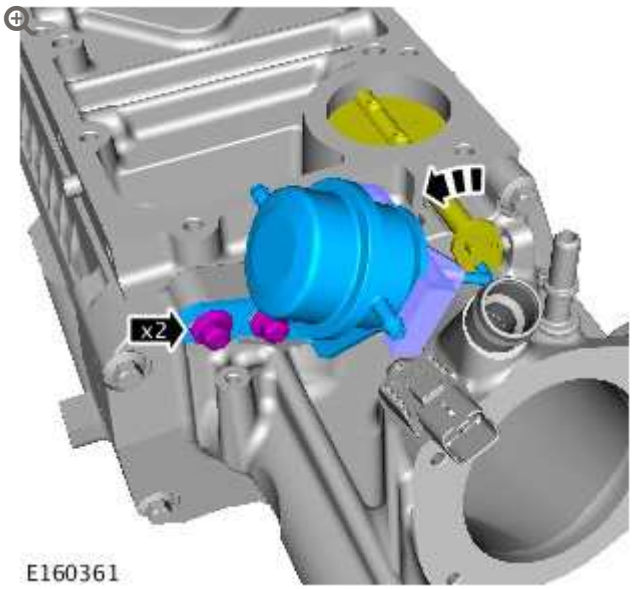

Torque: **20 Nm**

12.

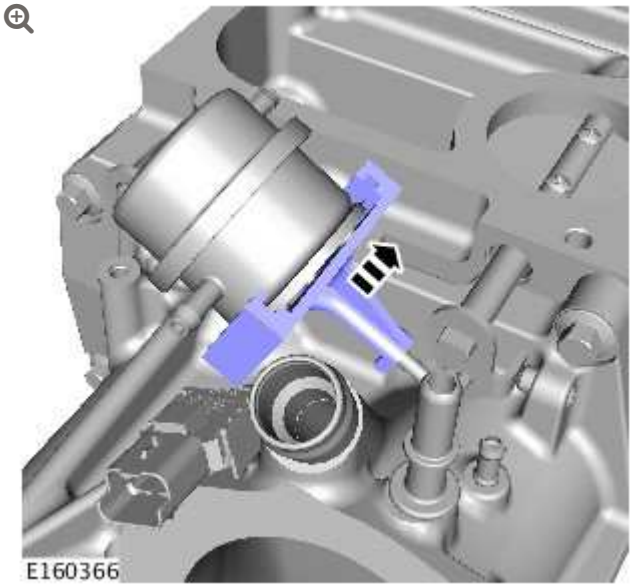

Remove the installation tool.

13.

CAUTIONS:

- Make sure that spring resistance is felt in both directions of the pulley as shown.
- Make sure that all open ports are covered to prevent any foreign material ingress.

NOTE:

Supercharger rotors will appear polished, this is normal.

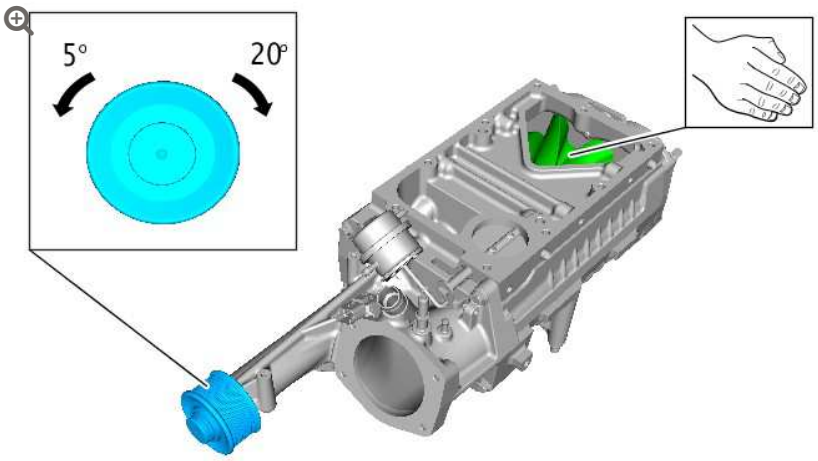

E160353

14.

CAUTION:

Make sure the components are installed as noted on removal. Failure to follow this instruction may result in damage to the component.

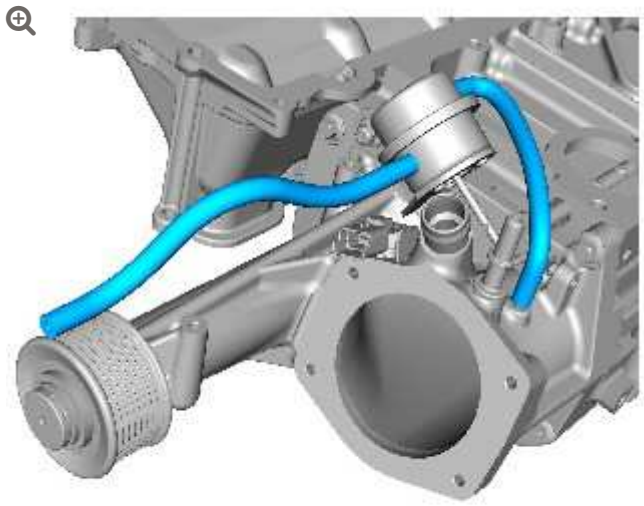

E160367

15.

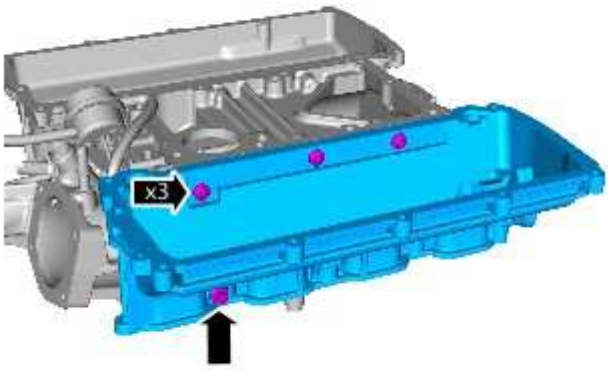

E160352

Torque: **25 Nm**

16. Refer to: Supercharger (303-12B Intake Air Distribution and Filtering - V8 S/C 5.0L Petrol, Removal and Installation).

INTAKE AIR DISTRIBUTION AND FILTERING – V8 S/C 5.0L PETROL

SUPERCHARGER (G1223973)

REMOVAL AND INSTALLATION

19.46.15	SUPERCHARGER ASSEMBLY – RENEW	5000 CC, AJ V8, SUPERCHARGED	3.5	USED WITHINS	+

SPECIAL TOOL(S)



303-1449-01

Supercharger Installation Guide Pins - Threaded



303-1449-02

Supercharger Installation Guide Pins - Unthreaded

REMOVAL

CAUTION:

If a new cylinder head has been installed, then new taptite bolts must be used to install the supercharger.

NOTES:

- New taptite bolts when used cut their own threads on the first application.
- Removal steps in this procedure may contain installation details.

1. **WARNING:**

   Make sure to support the vehicle with axle stands.

   Raise and support the vehicle.

2. Refer to: Supercharger Belt (303-05 Accessory Drive - V8 5.0L Petrol/V8 S/C 5.0L Petrol, Removal and Installation).

3. Refer to: Throttle Body (303-04B Fuel Charging and Controls - V8 S/C 5.0L Petrol, Removal and Installation).

4. Refer to: Charge Air Cooler (303-12B Intake Air Distribution and Filtering - V8 S/C 5.0L Petrol, Removal and Installation).

5. 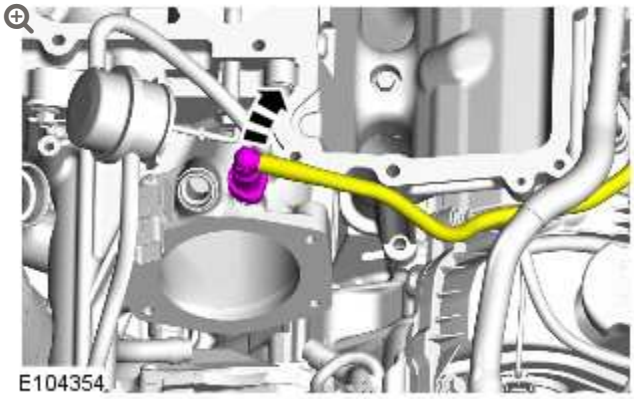

6. 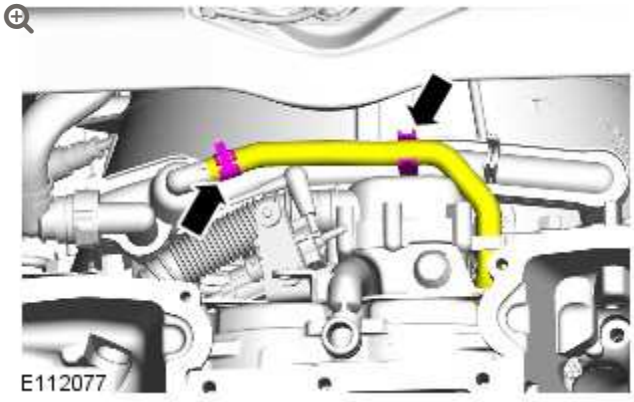

7.

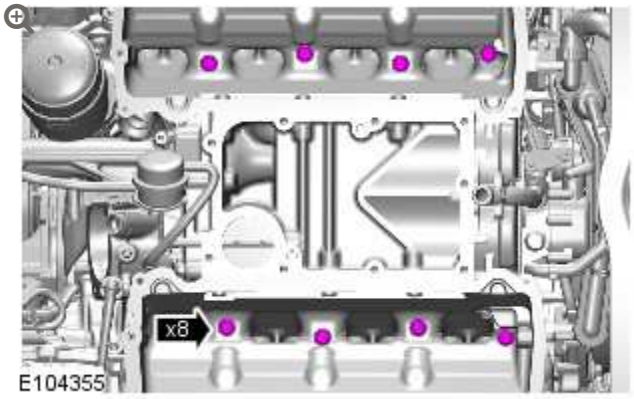

8.

NOTE:

Detatch component but do not remove at this stage.

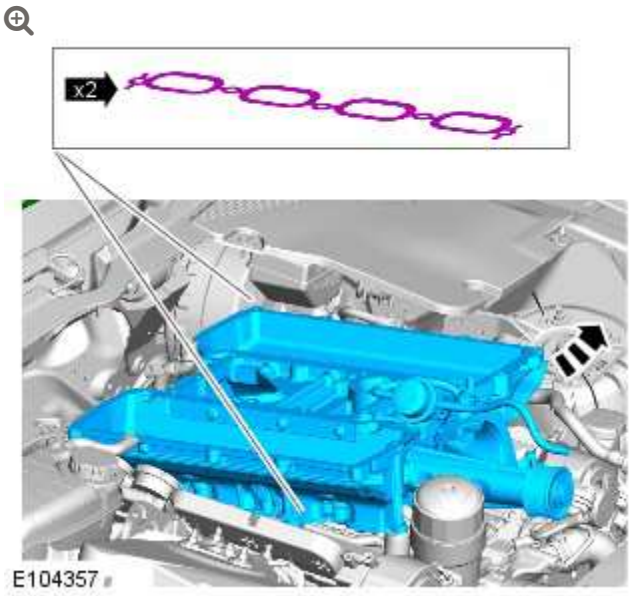

Discard the gaskets.

9.

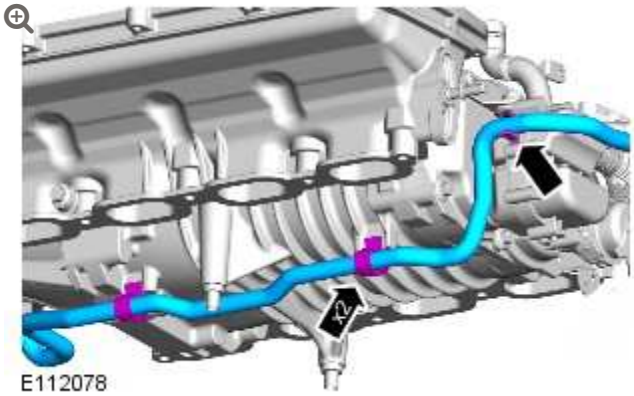

10.

CAUTION:

Make sure the wiring harness and electrical connectors are not damaged during this operation.

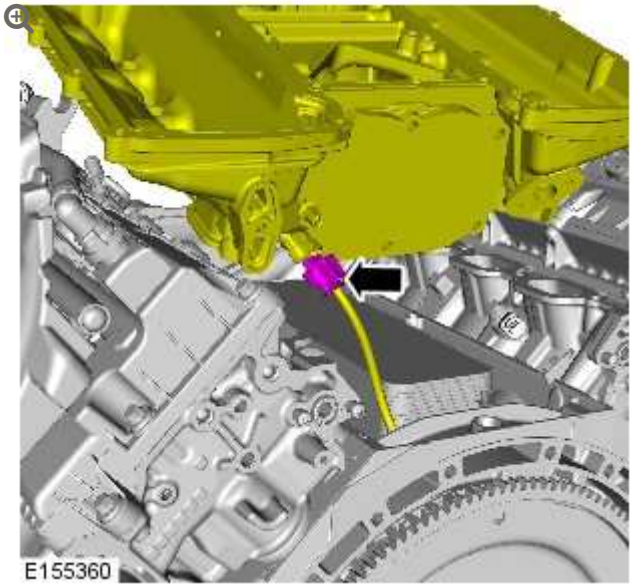

11.

NOTE:

Do not disassemble further if the component is removed for access only.

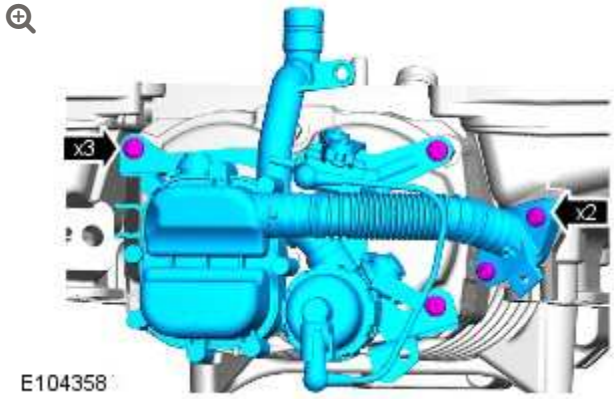

E104358

12.

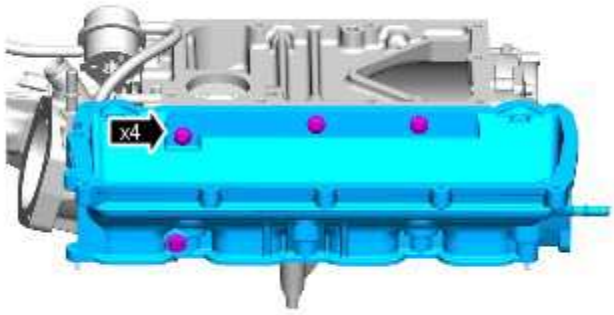

E104360

Torque: **25 Nm**

13.

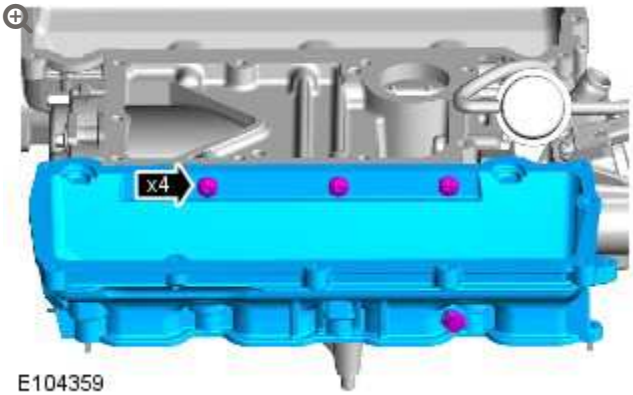

E104359

INSTALLATION

CAUTION:

If a new cylinder head has been installed, then new taptite bolts must be used to install the supercharger.

NOTE:

New taptite bolts when used cut their own threads on the first application.

1.

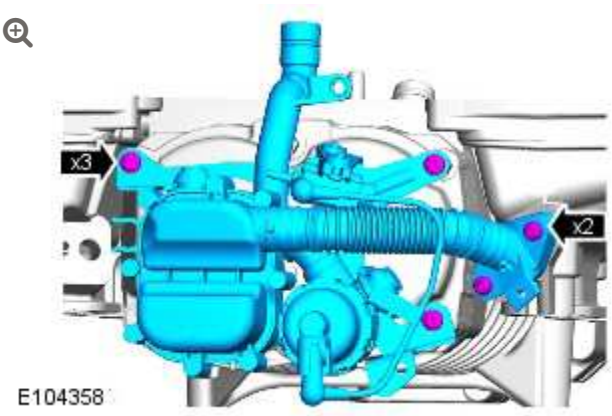

Torque: **10 Nm**

2.

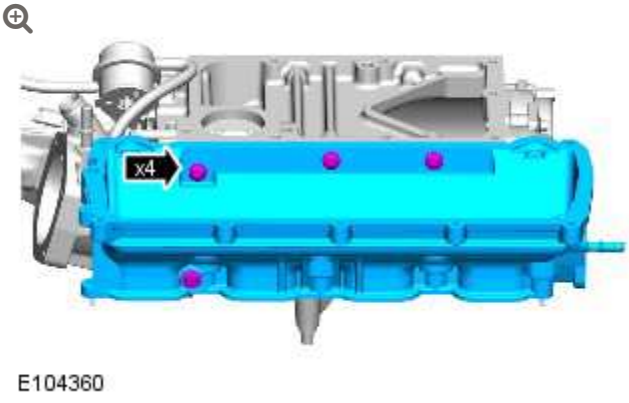

Torque: **25 Nm**

3.

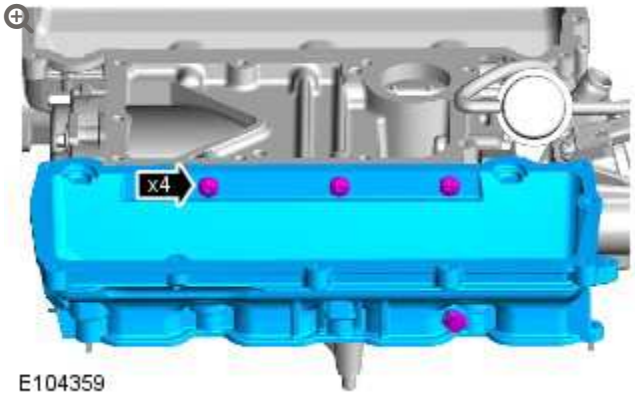

Torque: **25 Nm**

4.

CAUTIONS:

- If a new cylinder head has been installed then the special tool 303-1449-02 without the thread must be used to install the supercharger.
- If a new cylinder head has been installed, then new taptite bolts must be used to install the supercharger.

NOTE:

New taptite bolts when used cut their own threads on the first application.

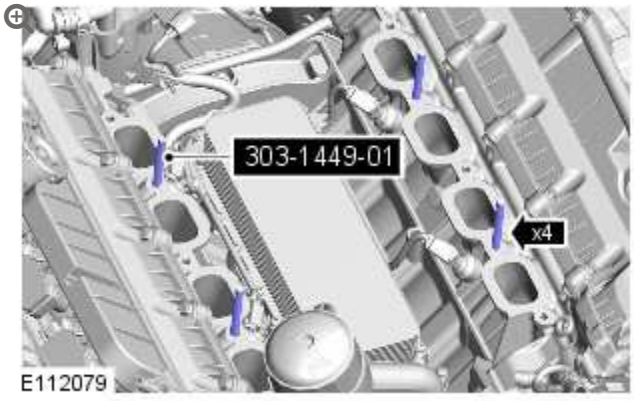

- *Special Tool(s):* 303-1449-01
- *Special Tool(s):* 303-1449-02

5.

CAUTION:

Make sure that the mating faces are clean and free of foreign material.

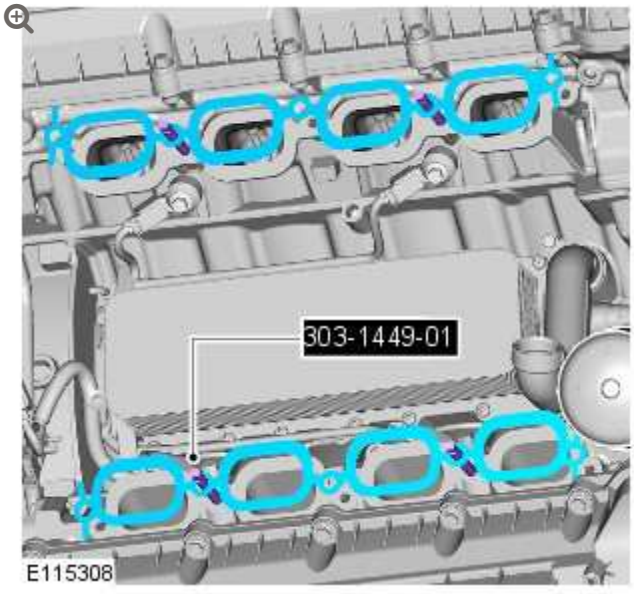

- Install new gaskets.

6.

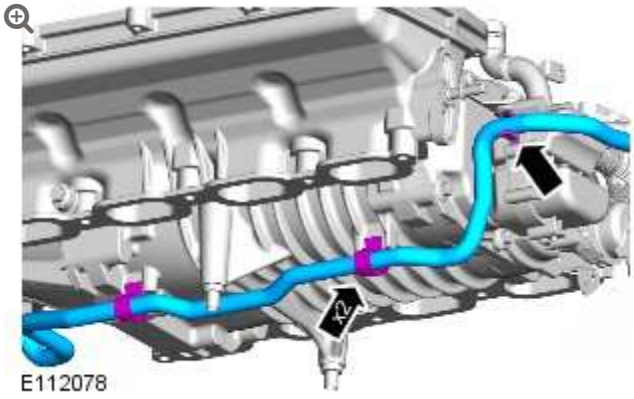

7.

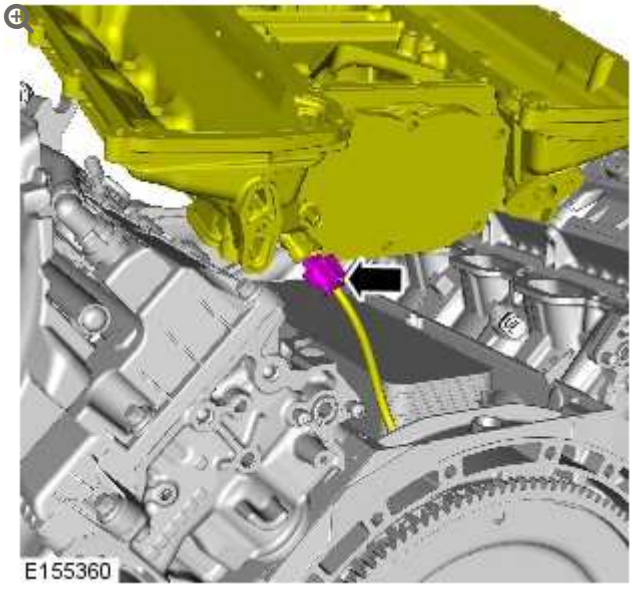

8.

CAUTION:

Make sure that the mating faces are clean and free of foreign material.

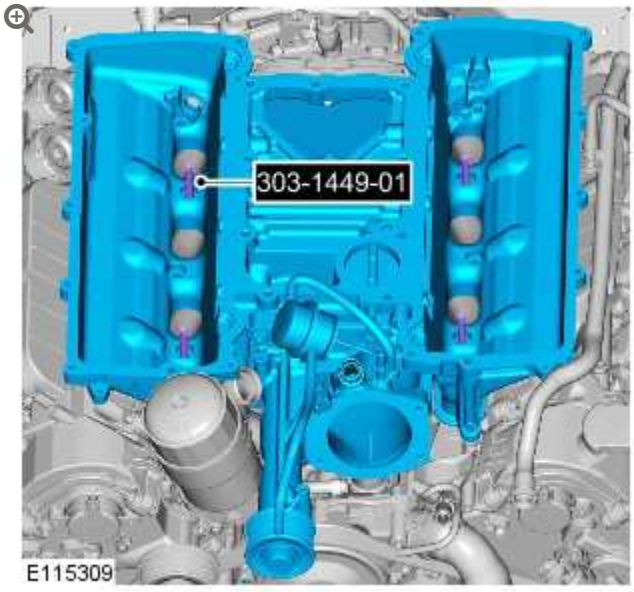

9.

CAUTION:

If a new cylinder head has been installed then the special tool 303-1449-02 without the thread must be used to install the supercharger.

NOTE:

Left-hand shown, right-hand similar.

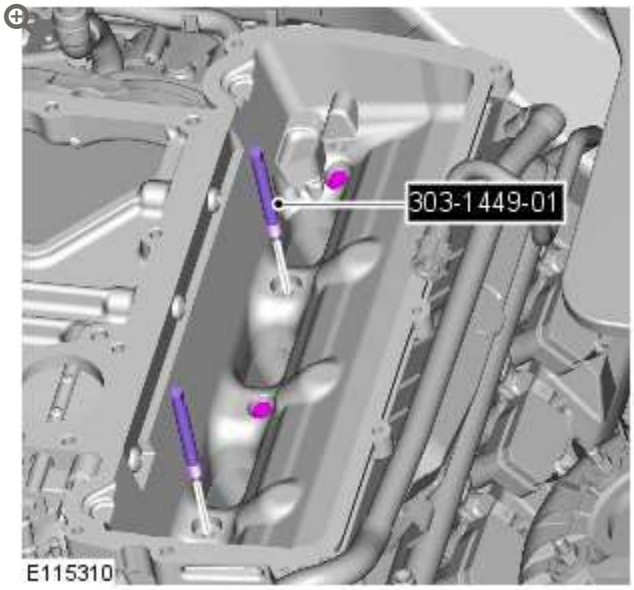

Torque: **25 Nm**

10.

NOTE:

Left-hand shown, right-hand similar.

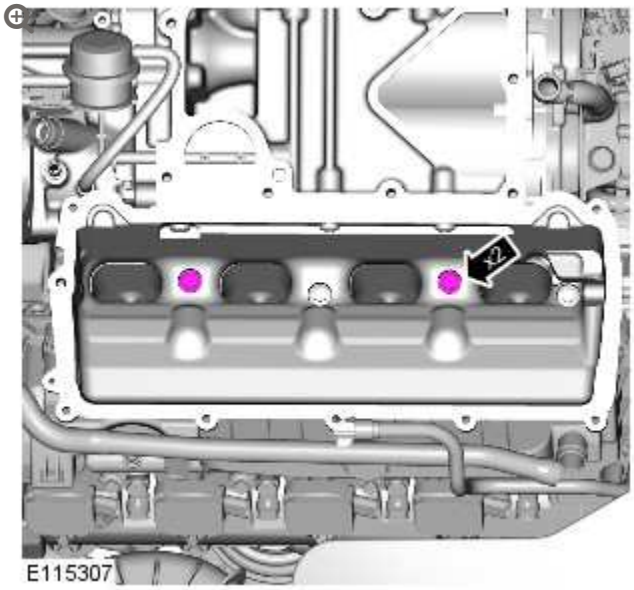

Torque: **25 Nm**

11.

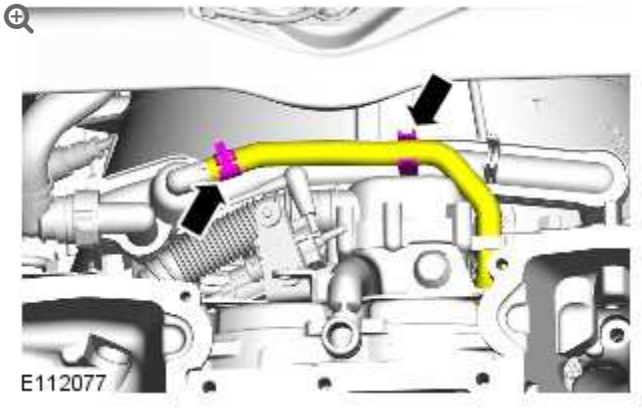

12.

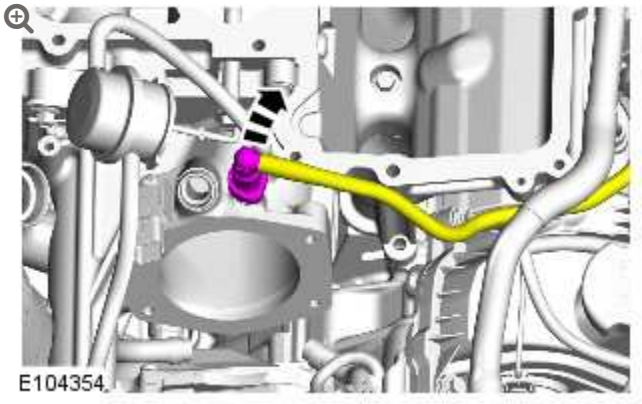

13. Refer to: Charge Air Cooler (303-12B Intake Air Distribution and Filtering - V8 S/C 5.0L Petrol, Removal and Installation).

14. Refer to: Throttle Body (303-04B Fuel Charging and Controls - V8 S/C 5.0L Petrol, Removal and Installation).

15. Refer to: Supercharger Belt (303-05 Accessory Drive - V8 5.0L Petrol/V8 S/C 5.0L Petrol, Removal and Installation).

EVAPORATIVE EMISSIONS – V8 5.0L PETROL/V8 S/C 5.0L PETROL

SPECIFICATIONS

Torque Specifications

DESCRIPTION	NM	LB-FT	LB-IN
Evaporative emission canister retaining bolts	19	14	-

EVAPORATIVE EMISSIONS - V8 5.0L PETROL/V8 S/C 5.0L PETROL

EVAPORATIVE EMISSION CANISTER (G1224390)

REMOVAL AND INSTALLATION

17.15.13	EVAPORATIVE EMISSION CANISTER - RENEW	5000 CC, AJ V8	1	USED WITHINS	+

REMOVAL

NOTE:

Removal steps in this procedure may contain installation details.

1. Disconnect the battery ground cable.
   Refer to: Specifications (414-00 Charging System - General Information, Specifications).

2. **WARNING:**

Refer to: Petrol and Petrol-Ethanol Fuel Systems Health and Safety Precautions (100-00, Description and Operation).

3. **WARNING:**

> Make sure to support the vehicle with axle stands.

Raise and support the vehicle.

4. Refer to: Exhaust System (309-00 Exhaust System - 5.0L NA V8 - AJ133/5.0L SC V8 - AJ133, Removal and Installation).

5. 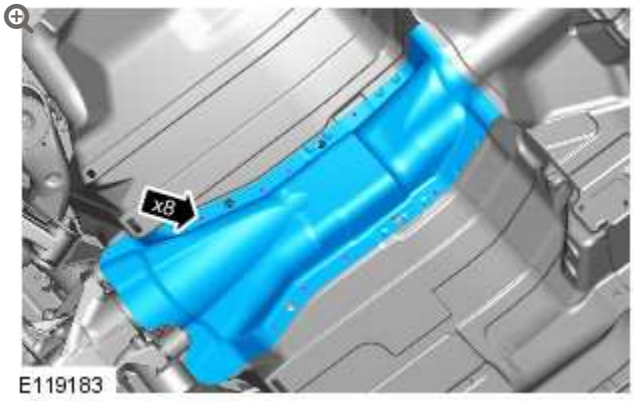

- *Torque:* **5 Nm**

6. 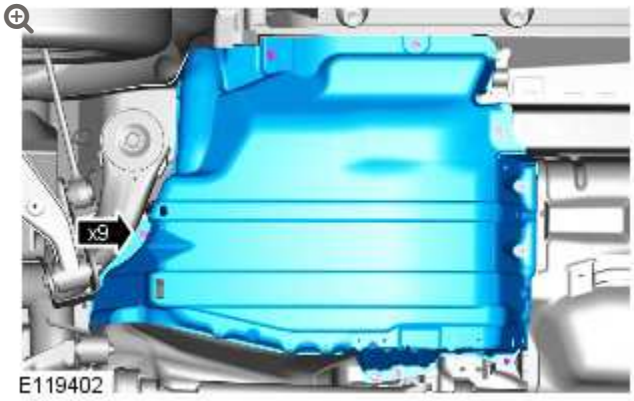

- *Torque:* **22 Nm**

7. **CAUTION:**

> Before the disconnection or removal of any components, ensure the area around joint faces and connections are clean. Plug any open connections to prevent contamination.

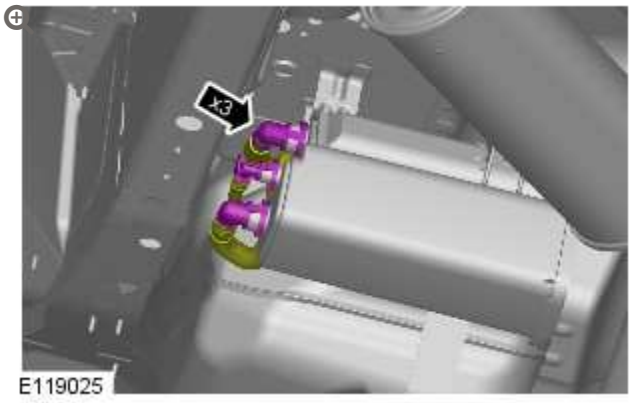

8. 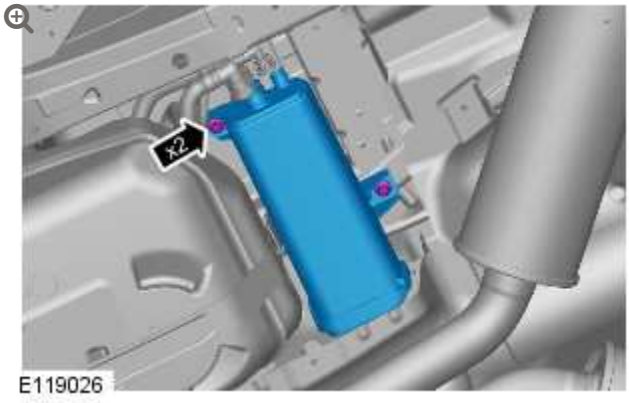

Remove the evaporative emissions canister.

Torque: **19 Nm**

INSTALLATION

1. To install, reverse the removal procedure.

EVAPORATIVE EMISSIONS – V8 5.0L PETROL/V8 S/C 5.0L PETROL

EVAPORATIVE EMISSION CANISTER PURGE VALVE – V8 S/C 5.0L PETROL

(G1224392)

REMOVAL AND INSTALLATION

17.15.06	SOLENOID – EVAPORATIVE EMISSION CANISTER PURGE – RENEW	AJ V8, SUPERCHARGED	0.6	USED WITHINS	+
17.15.39	VALVE – EVAPORATIVE EMISSION CANISTER PURGE – RENEW	5000 CC, AJ V8, SUPERCHARGED	0.2	USED WITHINS	+

REMOVAL

NOTE:

Removal steps in this procedure may contain installation details.

1. Disconnect the battery ground cable.
   Refer to: Specifications (414-00, Specifications).

2. Refer to: Engine Cover - 5.0L (501-05, Removal and Installation).

3. 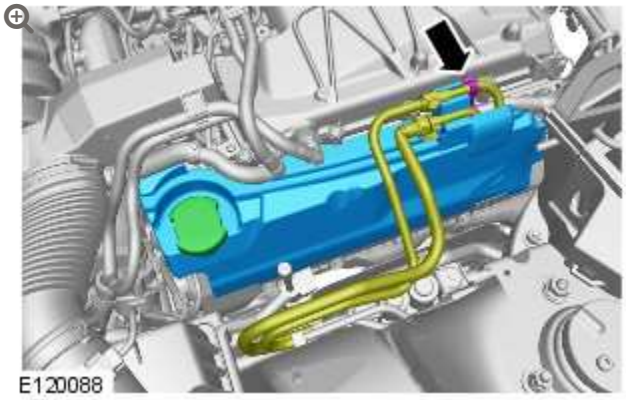

4. 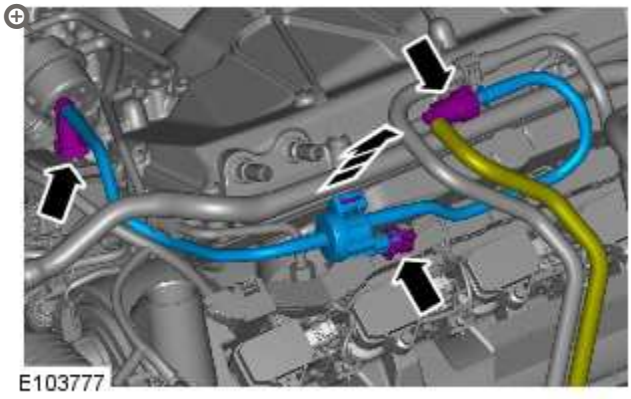

INSTALLATION

1. To install, reverse the removal procedure.

EVAPORATIVE EMISSIONS – V8 5.0L PETROL/V8 S/C 5.0L PETROL

DESCRIPTION AND OPERATION

COMPONENT LOCATION – ALL EXCEPT NAS

NOTE:

Installation on naturally aspirated vehicle shown, installation on SC (supercharger) vehicle similar.

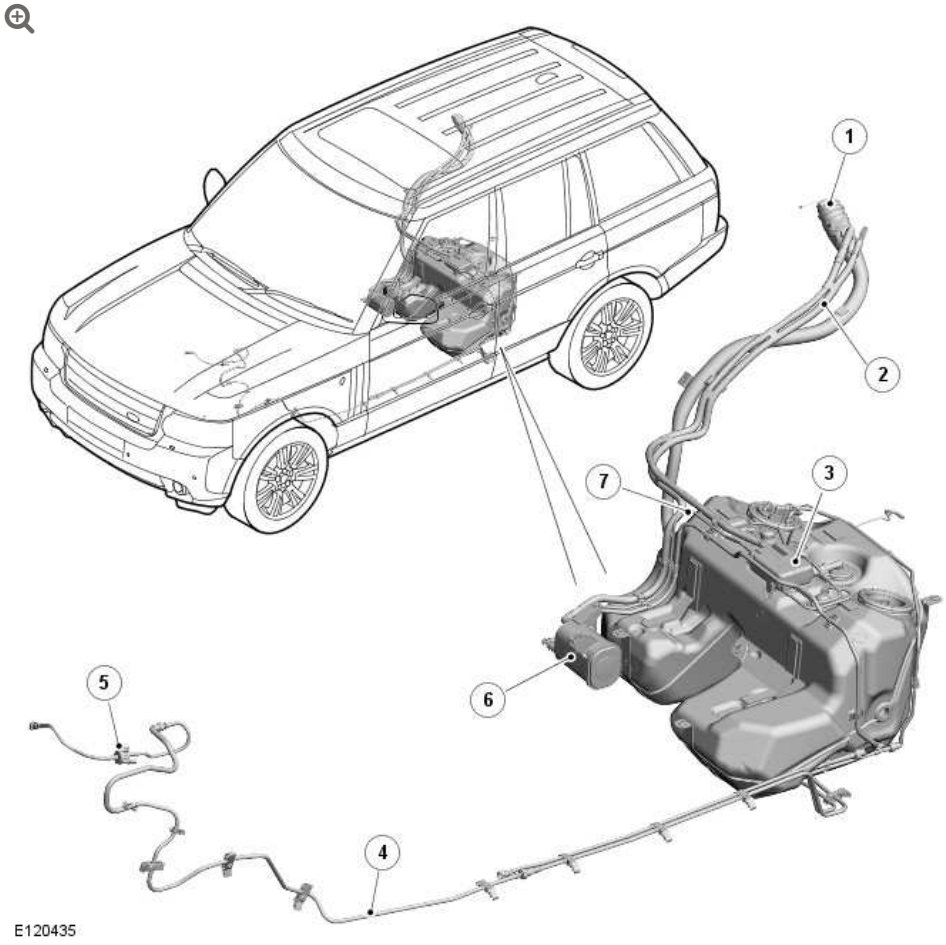

ITEM	DESCRIPTION
1	Fuel filler pipe/cap
2	Charcoal canister atmospheric vent hose
3	Vapor separator
4	Pipe to purge valve
5	Purge valve
6	Charcoal canister
7	Fuel tank vent pipe to canister

COMPONENT LOCATION – NAS

NOTE:

Installation on SC vehicle shown, installation on naturally aspirated vehicle similar.

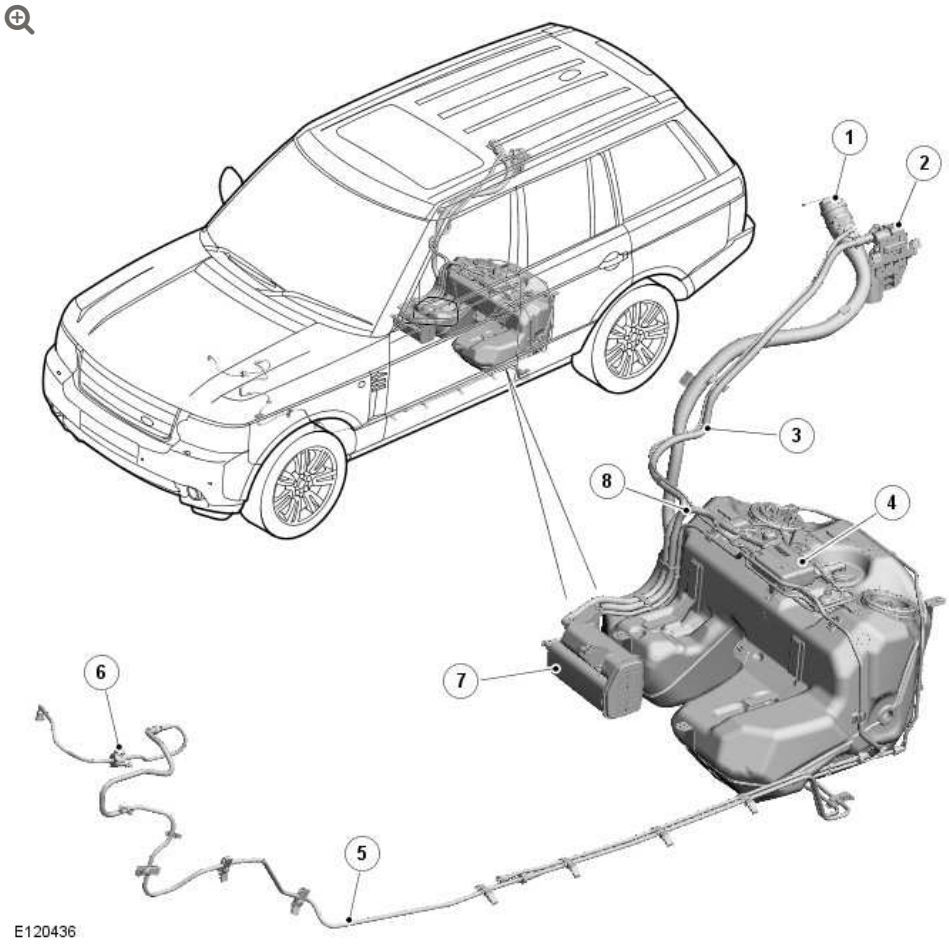

ITEM	DESCRIPTION
1	Fuel filler pipe/cap
2	DMTL (diagnostic module tank leakage) pump
3	Charcoal canister atmospheric vent hose
4	Vapor separator
5	Pipe to purge valve
6	Purge valve
7	Charcoal canister

ITEM	DESCRIPTION
8	Fuel tank vent hose to canister

INTRODUCTION

The EVAP (evaporative emission) control system reduces the level of hydrocarbons released into the atmosphere by fuel vapor venting from the fuel tank. The system comprises a charcoal canister, purge valve and interconnecting vent pipes and hoses. The vent pipes are connected to the system components using quick release connectors.

Fuel vapor is generated by the fuel in the tank and the amount of vapor produced increases as the fuel heats up. Fuel vapor can flow freely to the charcoal canister via the tank venting system. The venting system consists of roll over valves and a liquid vapor separator mounted on the top of the tank and connected via a breather hose. The breather hose allows the hydrocarbon fuel vapor to flow to the charcoal canister.

On NAS vehicles the vapor generated in the fuel tank during refueling flows without restriction to the charcoal canister.

On all vehicles except NAS, the vapor is restricted in its path to the charcoal canister but can flow freely during the fuel filling operation to atmosphere, via the filler opening.

The vapor from the fuel tank passes from the vapor separator into the charcoal canister where it is absorbed and stored by the charcoal. Because there is a limit to the amount of vapor the canister can contain, the fuel vapor is purged from the canister when the engine is running and burned in the engine during the combustion cycle.

PURGE VALVE AND PIPES

NOTE:

Installation on naturally aspirated vehicle shown, installation on SC vehicle similar.

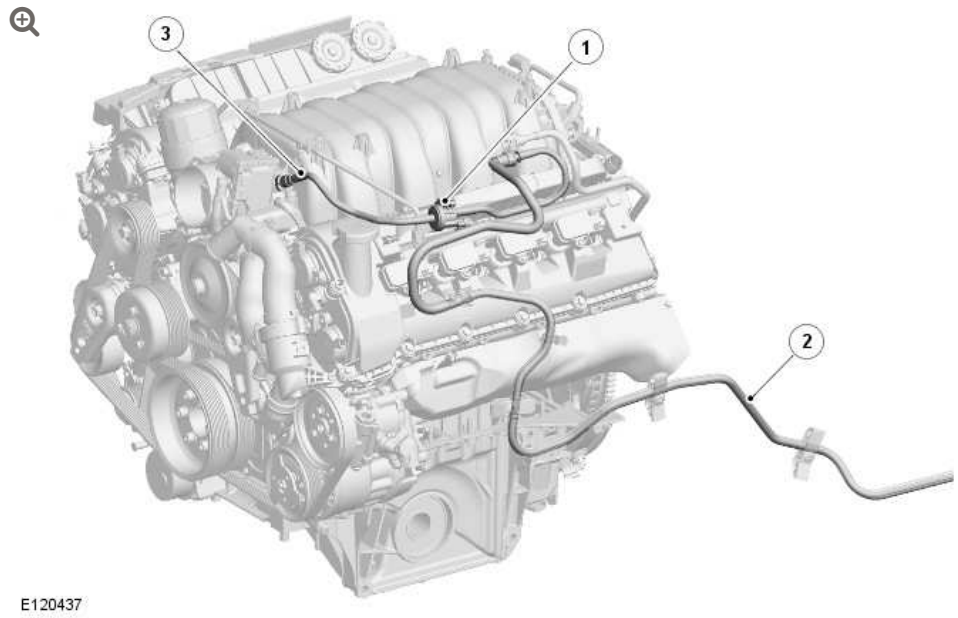

ITEM	DESCRIPTION
1	Purge valve
2	Pipe from charcoal canister
3	Pipe to engine

The purge valve is installed on a bracket attached to the LH (left-hand) cylinder head cover. The pipe to the engine from the purge valve is connected to the intake manifold (naturally aspirated vehicles), or SC front cover (SC vehicles), with a quick release connecter. The pipe to the charcoal canister from the purge valve is installed between the LH cylinder head cover and ignition coil cover, then goes through the left front suspension housing and along the underside of the vehicle, parallel with the fuel feed line. Just forward

of the left rear wheel arch the pipe goes across the top of the fuel tank to the charcoal canister.

The purge valve is a solenoid operated valve, which is closed when de-energized. The valve is controlled by the ECM (engine control module) and is operated when engine operating conditions are suitable for purging of the charcoal canister.

The purge valve is controlled by a PWM (pulse width modulation) signal at 10 Hz from the ECM. At this frequency, the pulses of purge gas flow into the engine in an almost continuous flow. The valve operates between 0% and 99% duty or mark space ratio (% open time).

The atmospheric pressure at the air intake vent of the system is higher than the inlet manifold pressure under all throttled engine running conditions. It is this pressure differential across the system that causes the air to flow through the air intake of the purge system and in to the engine. The operation of the supercharger does not affect the purging process.

The ECM waits until the engine is running above 55 °C (131 °F) coolant temperature, with closed loop fuel operational, before the purging process is activated. Under these conditions the engine should be running smoothly with no warm up enrichment. The purge valve duty (and flow) is initially ramped slowly because the vapor concentration is unknown (a sudden increase in purge could cause the engine to stall or loss of AFR control to occur). The concentration is then determined from the amount of adjustment that the closed loop fueling is required to make to achieve the target AFR (air fuel ratio). Once the concentration has been determined, the purge flow can be increased and the injected fuel can be proactively adjusted to compensate for the known purge vapor and the target AFR control is maintained.

When the purging process is active, fresh air is drawn into the charcoal canister via the DMTL atmospheric vent connection and filter (NAS vehicles) or via the vent hose connection and spider trap (all except NAS vehicles).

On NAS vehicles the system does not include a pressure test point. To pressure test the pipes of the purge system a special tool must be installed in the quick release connector adjacent to the purge valve or at the engine. This enables a pressure test of the pipes from the purge valve to the charcoal canister or from the engine to the purge valve.

CHARCOAL CANISTER

Charcoal Canister - All Except NAS

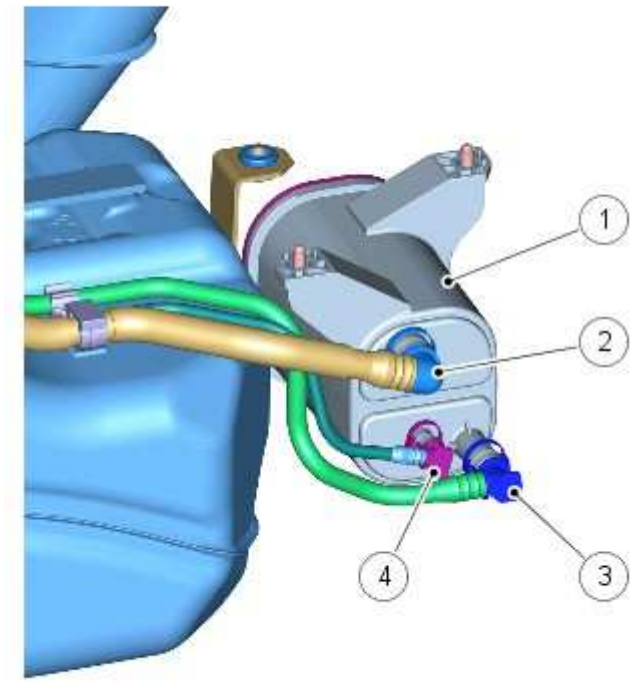

E60202

ITEM	DESCRIPTION
1	Charcoal canister

ITEM	DESCRIPTION
2	Charcoal canister atmospheric vent connection
3	Fuel tank vapor vent connection
4	Purge pipe connection

Charcoal Canister - NAS

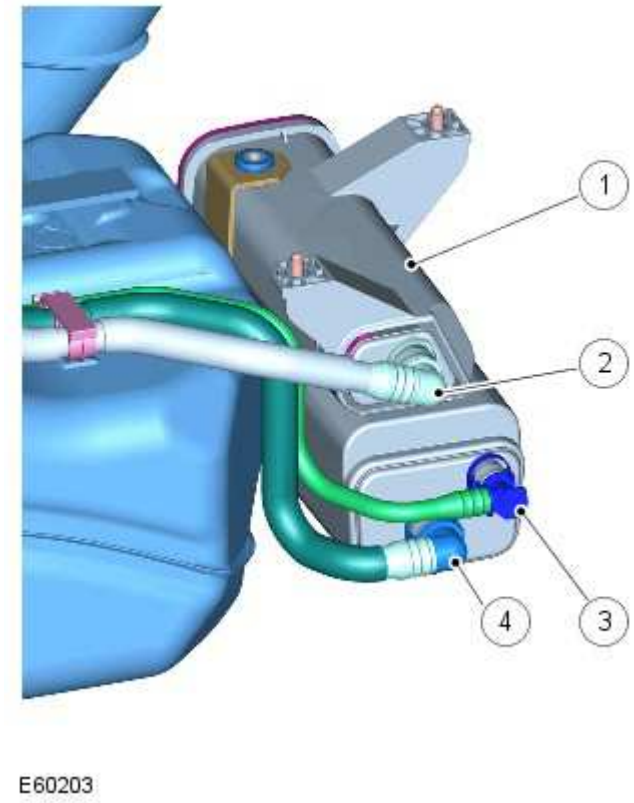

E60203

ITEM	DESCRIPTION
1	Charcoal canister
2	Charcoal canister atmospheric vent connection
3	Purge pipe connection
4	Fuel tank vapor vent connection

The charcoal canister is located on the forward edge of the fuel tank on the RH (right-hand) side. It is attached to brackets on the underfloor of the vehicle.

The canister on all except NAS vehicles has a capacity of 1200 cc (73.2 in^3).

The canister on NAS vehicles has a capacity of 3000 cc (183 in^3).

The canister has three ports which allow for the attachment of the pipes from the atmospheric vent, the purge valve and the tank vent. On NAS vehicles the atmospheric vent pipe connection allows for the attachment of the DMTL pump.

The canister contains a bed of activated charcoal or carbon. The charcoal is produced using special manufacturing techniques to treat the charcoal with oxygen. The oxygen treatment opens up millions of pores between the carbon atoms resulting in a highly porous charcoal with a very large effective surface area which is capable of absorbing large quantities of fuel vapor. Once treated the charcoal is known as 'activated' carbon or charcoal. The charcoal canister on NAS vehicles uses a higher grade charcoal to meet the requirements of LEV2 emission regulations.

DIAGNOSTIC MODULE TANK LEAKAGE – NAS ONLY

The DMTL system is a legislative requirement for NAS vehicles. The DMTL system periodically checks the EVAP system and the fuel tank for leaks when the ignition is switched off.

The DMTL system comprises the previously described components of the EVAP system with the following additional components; a DMTL pump and a DMTL filter.

DMTL Pump

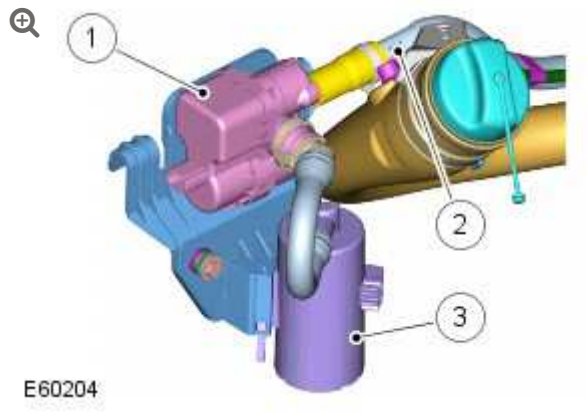

ITEM	DESCRIPTION
1	DMTL pump
2	Charcoal canister atmospheric vent pipe
3	DMTL pump intake filter

The DMTL pump is located at the top of the fuel filler pipe, on a bracket near to the filler neck. The pump is connected by a pipe to the atmospheric vent of the charcoal canister and incorporates a PTC (positive temperature coefficient) heating element, a normally open valve and a reference orifice. The DMTL pump is only operated when the ignition is switched off and is controlled by the ECM. The ECM also monitors the electric air pump operation and the normally open valve for faults.

The DMTL filter protects the pump from dust being drawn into the system when the pump is being operated. The filter is located below the DMTL pump and is connected by a hose.

DMTL OPERATION

To check the fuel tank and the EVAP system for leaks, the ECM operates the DMTL pump and monitors the current draw. Initially, the ECM establishes a reference current by pumping air through the reference orifice and back to atmosphere. Once the reference current is determined, the ECM closes the normally open valve, which seals the EVAP system. The purge valve remains de-energized

and is therefore closed. The output from the air pump is diverted from the reference orifice and into the EVAP system.

DMTL System Inactive

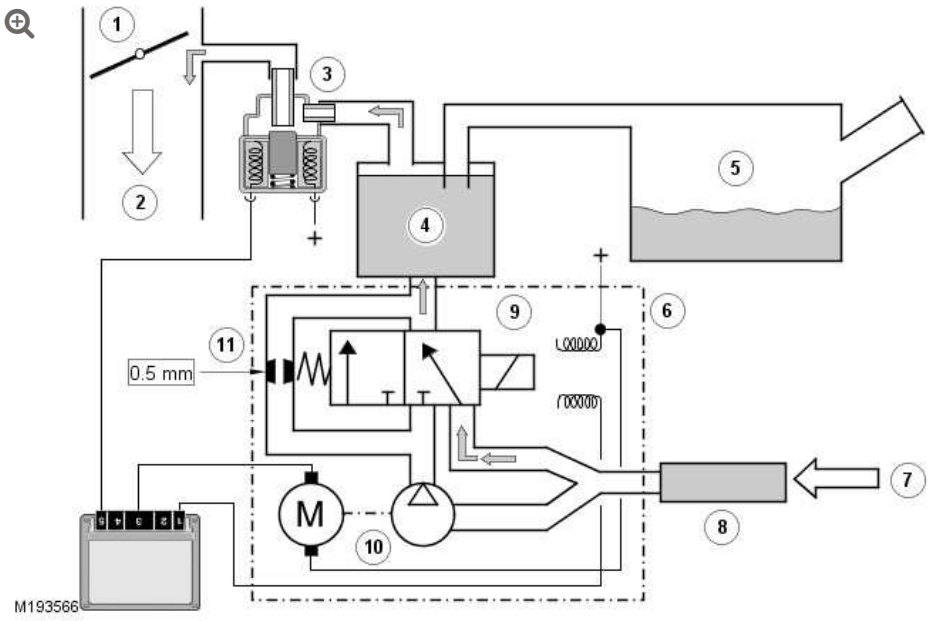

ITEM	DESCRIPTION
1	Throttle plate
2	Air flow to engine
3	Purge valve
4	Charcoal canister
5	Fuel tank
6	DMTL pump assembly
7	Air intake
8	Air filter
9	Change over valve
10	Pump
11	Reference orifice

In its inactive state, the DMTL pump motor and the change over valve solenoid are not energized. When the ECM energizes the purge valve, filtered fresh air enters the evaporative system through the sprung open change over valve of the DMTL pump. The filtered air enters the system compensating for engine vacuum drawing on the hydrocarbon vapors stored in the charcoal canister.

DMTL System Active

Phase 1 - Reference Measurement

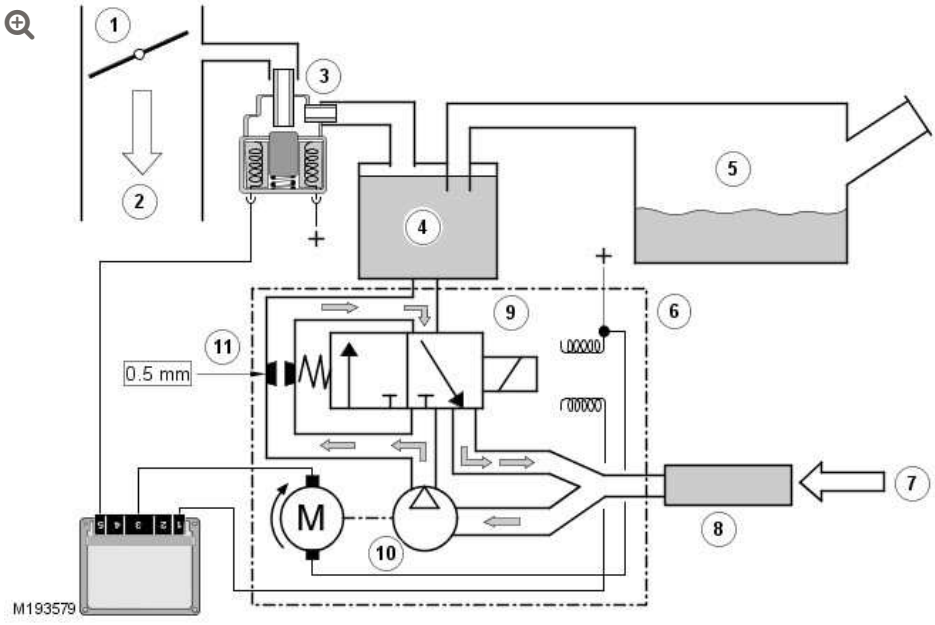

ITEM	DESCRIPTION
1	Throttle plate
2	Air flow to engine
3	Purge valve
4	Charcoal canister
5	Fuel tank
6	DMTL pump assembly
7	Air intake
8	Air filter

ITEM	DESCRIPTION
9	Change over valve
10	Pump
11	Reference orifice

When the ECM activates the DMTL system, it first activates only the DMTL pump motor. This pumps air through a 0.5 mm (0.02 in) reference orifice, which causes the electric motor to draw a specific amperage value. This value equates to the size of the reference orifice.

When the change over valve solenoid is energized, the normally open valve is closed, sealing the EVAP system from atmosphere. Providing there are no leaks, the air pump will begin to pressurize the EVAP system and the load and current draw on the pump increases. By monitoring the rate and level of the current increase, the ECM can determine if there is a leak in the EVAP system.

During normal vehicle operation, the ECM energizes the heating element in the pump to prevent condensation formation and possible incorrect current readings.

Leaks are classified as:

- Minor - equivalent to a hole diameter of 0.5 to 1.0 mm (0.02 to 0.04 in)
- Major - equivalent to hole diameter of 1.0 mm (0.04 in) or greater.

The ECM performs a check for major leaks each time the ignition is switched off, providing the following conditions are met:

- The vehicle speed is zero
- The engine speed is zero

- The pressure altitude (70 kPa (10.15 lbf/in^2) derived from engine load calculations) is below 3047 m (10000 feet)
- The ambient temperature is between 0 and 40 °C (32 and 104 °F)
- The charcoal canister load factor is 5 or less (the load factor is a measure, between -1 and +30, of the fuel vapor stored in the charcoal canister, where -1 is 0% fuel vapor, 0 is stoichiometric fuel vapor level and +30 is 100% saturated with fuel vapor)
- The fuel tank level is valid and between 15 and 85% of nominal capacity
- The engine running time during the previous cycle was more than 10 minutes
- The battery voltage is between 10 and 15 volts
- The last engine off time was more than 180 minutes
- No errors are detected with the EVAP components, the ambient air temperature and the fuel level
- High range is selected on the transfer box.

NOTE:

A leak test can be performed using the Land Rover recommended diagnostic tool. This overrides the above conditions and is useful for checking correct system and component operation.

Phase 2 - Leak Detection

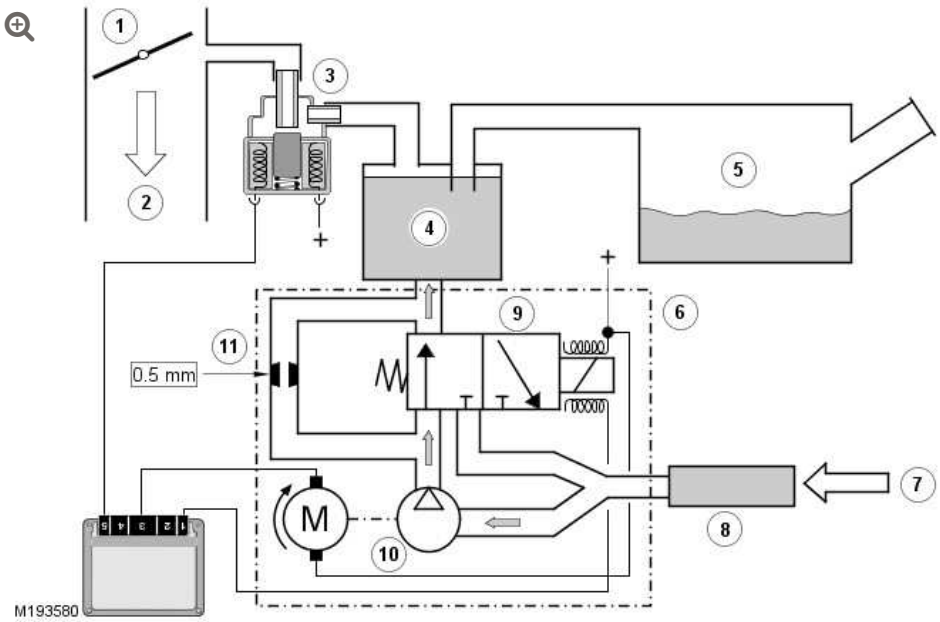

ITEM	DESCRIPTION
1	Throttle plate
2	Air flow to engine
3	Purge valve
4	Charcoal canister
5	Fuel tank
6	DMTL pump assembly
7	Air intake
8	Air filter
9	Change over valve
10	Pump
11	Reference orifice

The ECM performs a check for minor leaks after every 2nd major leak check or after refueling is detected.

When the leak check is complete, the ECM stops the DMTL pump and opens (de-energizes) the normally open change over valve.

If the fuel filler cap is opened or refueling is detected during the leak check, by a sudden drop in the current draw or a rise in the fuel level, the ECM aborts the leak check.

If a leak is detected during the check, the ECM stores an appropriate fault code in its memory. If a leak is detected on two consecutive checks, the ECM illuminates the MIL (malfunction indicator lamp) in the instrument cluster on the next drive cycle.

The duration of a leak check can be between 60 and 900 seconds depending on the test results (developed tank pressure amperage within a specific time period) and fuel tank level.

The following chart depicts the logic used to determine fuel system leaks:

Test Results

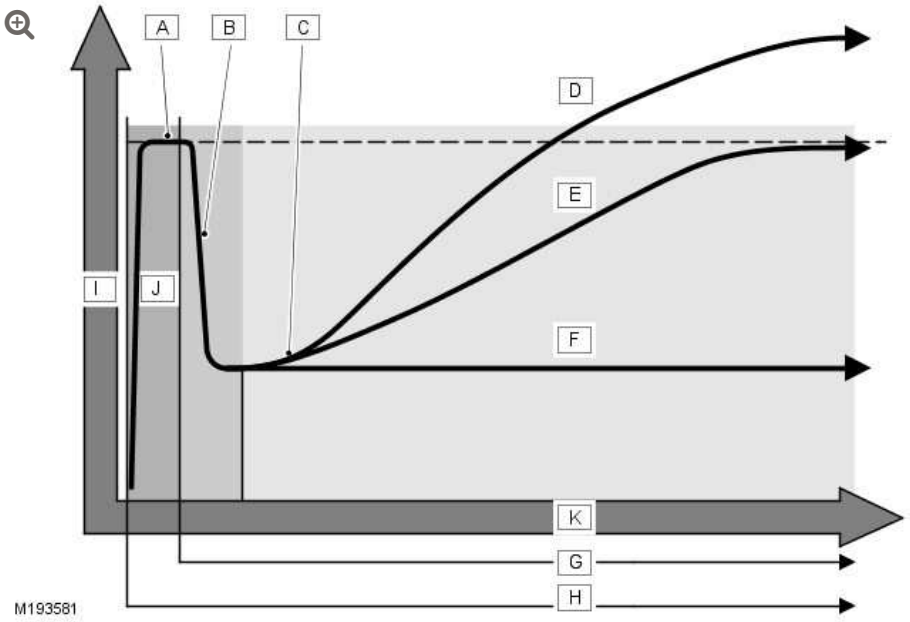

ITEM	DESCRIPTION
A	Current stabilizes
B	Current drops
C	Current rises

ITEM	DESCRIPTION
D	No leak detected
E	0.5 mm leak
F	Leak >1.0 mm
G	Change over valve energized
H	Pump motor energized
I	Motor current pressure
J	Reference measurement 0.5 mm
K	Time duration

EVAPORATIVE EMISSIONS – V8 5.0L PETROL/V8 S/C 5.0L PETROL

DIAGNOSIS AND TESTING

PRINCIPLES OF OPERATION

For a detailed description of the evaporative emission system and operation, refer to the relevant Description and Operation section of the workshop manual.

INSPECTION AND VERIFICATION

WARNINGS:

- This procedure involves fuel handling. Be prepared for fuel spillage at all times and always observe fuel handling precautions. Failure to follow this instruction may result in personal injury.
- Eye protection must be worn at all times when working on or near any fuel related components. Failure to follow this instruction may result in personal injury.
- If fuel contacts the eyes, flush the eyes with cold water or eyewash solution and seek medical attention. Failure to follow this instruction may result in personal injury.

CAUTION:

Diagnosis by substitution from a donor vehicle is **NOT** acceptable. Substitution of control modules does not guarantee confirmation of a fault, and may also cause additional faults in the vehicle being tested and/or the donor vehicle.

NOTES:

- If the control module or a component is suspect and the vehicle remains under manufacturer warranty, refer to the Warranty Policy and Procedures manual (section B1.2), or determine if any prior approval programme is in operation, prior to the installation of a new module/component.
- When performing voltage or resistance tests, always use a digital multimeter accurate to three decimal places, and with an up-to-date calibration certificate. When testing resistance always take the resistance of the digital multimeter leads into account.

1. Verify the customer concern

2. Visually inspect for obvious signs of damage and system integrity (Visual inspection only - Do not disturb any components)

Visual Inspection

MECHANICAL	ELECTRICAL
▪ Fuel filler cap ▪ Fuel filler neck ▪ Fuel pipes ▪ Fuel tank ▪ Evaporative emissions canister ▪ Purge valve ▪ Diagnostic Module Tank Leakage (DMTL) filter ▪ Diagnostic Module Tank Leakage (DMTL) pump	▪ Fuses ▪ Wiring harnesses and connectors ▪ Purge valve ▪ Diagnostic Module Tank Leakage (DMTL) pump ▪ Diagnostic Module Tank Leakage (DMTL) changeover valve

3. If an obvious cause for an observed or reported concern is found, correct the cause (if possible) before proceeding to the next step

4. If the cause is not visually evident, verify the symptom and refer to the Symptom Chart, alternatively check for Diagnostic Trouble Codes (DTCs) and refer to the DTC Index

5. Check DDW for open campaigns. Refer to the corresponding bulletins and SSMs which may be valid for the specific customer complaint and carry out the recommendations as required

SYMPTOM CHART

SYMPTOM	POSSIBLE CAUSES	AC
Difficulty in filling fuel tank	▪ Restriction in the vapor line between the fuel tank and the carbon canister outlet/atmospheric port	▪ Check f restricti etc (see inspecti
Fuel smell	▪ Fuel system leak ▪ Purge valve inoperative	▪ Check f ▪ Check t of the p
CHECK FUEL FILLER CAP displayed on message center and only evaporative emission system leak DTCs P0442/P0455/P0456 set	▪ Fuel system leak detected	▪ Refer to sections regardi diagnos and the tools. G Pinpoint
Malfunction Indicator Lamp (MIL) illuminated and only evaporative emission system leak DTCs P0442/P0455/P0456 set	▪ Fuel system leak detected	▪ Refer to sections regardi diagnos and the

SYMPTOM	POSSIBLE CAUSES	AC
		tools. G Pinpoint
DMTL system related DTCs P0447/P0448/P2401/P2402/P2404/P2405/P2406/P2450 set	▪ Diagnostic Module Tank Leakage (DMTL) system fault	▪ Refer to sections regardir diagnos and the tools. G Pinpoint

DIAGNOSTIC ROUTINE

NOTES:

- The Evaporative System Diagnostic Check routine will not run if the battery state of charge is too low. To proceed, connect the manufacturer approved Vehicle Battery Conditioner / Power Supply.
- The Evaporative System Diagnostic Check routine will not run if the fuel level is too low (<15%). To proceed, add the correct grade of fuel as necessary.

The Evaporative System Diagnostic Check routine will initially measure the reference current drawn by the diagnostic module tank leakage pump, and then energise the changeover valve to pressurise the fuel tank. The combustible gas detector is then used to identify the source of a leak. The routine takes approximately 10 minutes may be performed up to 3 times to allow time to test the entire fuel system.

SPECIAL TOOLS

COMBUSTIBLE GAS DETECTOR

The combustible gas detector is used to detect petrol vapor leaks. Before testing, perform the proving and calibrating routines.

WARNING:

> Do not use the combustible gas detector if the proving routine or the calibration routine cannot be completed successfully.

CAUTION:

> The combustible gas detector and its rechargeable batteries will be damaged if the batteries are installed in the wrong orientation.

NOTE:

> The combustible gas detector should be switched on and calibrated in a non-contaminated environment.

Proving Routine

Perform the following steps to test the combustible gas detector:

1. Rotate the sensitivity control fully counter-clockwise
2. Set the combustible gas detector power switch to 'ON'
3. Check the battery warning indicator - The batteries must be recharged if the warning indicator is **not** illuminated
4. Allow the combustible gas detector to warm up (approximately 30 seconds)

5. Slowly rotate the sensitivity control fully clockwise - Check that the ticking rate increases and ultimately becomes a siren

6. When testing is complete, set the combustible gas detector power switch to 'OFF'

Calibration Routine

Perform the following step to calibrate the combustible gas detector:

7. Slowly rotate the sensitivity control until a rapid ticking is audible - the detector is now set to 'high sensitivity' mode and this is suitable for detecting small leaks. Alternatively, if the siren sounds repeatedly during testing, rotate the sensitivity control until a slow ticking is audible - the detector is now set to 'low sensitivity' mode and this is suitable for detecting the source of large leaks

Testing

The fuel tank must be pressurised during leak testing. To achieve this, use the manufacturer approved diagnostic system to perform routine - Evaporative System Diagnostic Check. Test the fuel system components for leaks in the following order:

- Fuel filler cap
- Purge valve
- Diagnostic module tank leakage module
- Fuel tank
- Filler neck / vapor hose

PURGE VALVE HOSE BUNGS

A leaking (not closing fully) purge valve is identified in the Pinpoint Tests by performing the test routine with a bung installed in the purge hose.

Bung Sizes

MODEL	BLANKING TOOL
XF (X250)	9.89mm male
XJ (X351)	9.89mm male
XK (X150)	9.89mm male
F-Type (X152)	9.89mm male
LR2 (L359)	7.89mm female
LR3/LR4 (L319)	9.89mm female
Evoque (L538)	7.89mm female
Range Rover (L322)	9.89mm male
Range Rover (L405)	9.89mm male
Range Rover Sport (L320)	9.89mm female
Range Rover Sport (L494)	7.89mm male / 9.89mm male

LEAK REPAIRS

Each component joint in the fuel system is a potential leak path. For further information regarding the installation of hoses and seals, refer to the relevant section of the workshop manual.

The fuel filler cap is the only component that is frequently disturbed and as such is the most likely leak path. When installing the fuel filler cap, it should be tightened securely to ensure a leak free system.

The diagnostic module tank leakage pump is not sealed internally at the electrical connector. The wiring harness connector contains grommets and a conventional seal. This connector must be installed securely to ensure a leak free system.

SMOKE TESTING

Smoke testing should be used to identify a leak only when instructed by Dealer Technical Support. Refer to the manufacturer's instructions for information regarding using the smoke test equipment. Smoke may be introduced into the fuel system via the purge hose, the fuel filler neck or the DMTL filter housing. When introducing smoke via the DMTL filter housing, use the manufacturer approved diagnostic system to perform routine - Evaporative System Diagnostic Check - to ensure that the DMTL changeover valve is energised and the DMTL pump is running.

PINPOINT TESTS

PINPOINT TEST A : DTC READ	
TEST CONDITIONS	DETAILS/RESULTS/ACTIONS
A1: DTC READ	
	1 Using the manufacturer approved diagnostic system, check the engine control module for related DTCs
	Are any purge valve DTCs set? **Yes** Refer to the relevant DTC Index and rectify any purge valve faults before proceeding. GO to Pinpoint Test **B.** **No** GO to Pinpoint Test **B.**

PINPOINT TEST B : DIAGNOSTIC MODULE TANK LEAKAGE TESTS	
TEST CONDITIONS	DETAILS/RESULTS/ACTIONS
B1: DIAGNOSTIC MODULE TANK LEAKAGE TEST 1	
	1 Using the manufacturer approved diagnostic system, perform routine - Evaporative System Diagnostic Check - and use the combustible gas detector to check for leaks
	Was a leak detected around the fuel filler cap? **Yes** GO to B2. **No** GO to B3.

PINPOINT TEST B : DIAGNOSTIC MODULE TANK LEAKAGE TESTS	
B2: DIAGNOSTIC MODULE TANK LEAKAGE TEST 2	
	1 Tighten the fuel filler cap securely
	2 Using the manufacturer approved diagnostic system, perform routine - Evaporative System Diagnostic Check - and use the combustible gas detector to check for leaks
	Test passed? **Yes** Repair complete. Advise the customer to always tighten the fuel filler cap securely **No** GO to B3.
B3: DIAGNOSTIC MODULE TANK LEAKAGE TEST 3	
	1 Consider the previous test results
	Was a leak detected by the routine? **Yes** GO to B4. **No** Diagnostic module tank leakage system circuit fault. Check DTCs and refer to the relevant DTC Index. Repair the circuit fault as necessary. GO to Pinpoint Test E.
B4: DIAGNOSTIC MODULE TANK LEAKAGE TEST 4	
	1 Consider the previous test results
	Was the source of the leak identified? **Yes** Repair as necessary. GO to Pinpoint Test E. **No** GO to Pinpoint Test D.

NOTE:

When the vehicle has been exposed to cold ambient temperatures, it is possible for the DMTL filter to become blocked with snow or ice. This can cause a leak to be detected in error as the DMTL pump will be unable to pressurise the fuel tank within the prescribed time.

PINPOINT TEST C : BLOCKED DMTL FILTER TESTS	
TEST CONDITIONS	DETAILS/RESULTS/ACTIONS
C1: BLOCKED DMTL FILTER TEST 1	
	1 Check the DMTL filter for restrictions/blockages
	Is a restriction or blockage present? **Yes** Repair as necessary. GO to Pinpoint Test **E.** **No** GO to Pinpoint Test **D.**

NOTE:

This test is performed when a DTC indicates that a leak is present but an external leak has not been identified using the combustible gas detector.

PINPOINT TEST D : PURGE HOSE BUNG TESTS	
TEST CONDITIONS	DETAILS/RESULTS/ACTIONS
D1: PURGE HOSE BUNG TEST 1	
	1 Disconnect the purge hose from the purge valve
	2 Install the appropriate bung to the purge hose
	3 Using the combustible gas detector, check for fuel vapor near the bung; allow fuel vapor to dissipate before proceeding
	4 Using the manufacturer approved diagnostic system, perform routine - Evaporative System Diagnostic Check - and use the combustible gas detector to check for leaks
	Test passed? **Yes** Remove the bung. Install a new purge valve. GO to Pinpoint Test **E.** **No** **GO to D2.**
D2: PURGE HOSE BUNG TEST 2	

PINPOINT TEST D : PURGE HOSE BUNG TESTS	
	1 Consider the results of the previous test
	Was the source of the leak identified? **Yes** Repair as necessary. GO to Pinpoint Test **E.** **No** **GO to D3**.
D3: PURGE HOSE BUNG TEST 3	
	1 Remove the bung
	2 Reconnect the purge hose to the purge valve
	3 Using the manufacturer approved diagnostic system, perform routine - Evaporative System Diagnostic Check - and use the combustible gas detector to check for leaks
	Was the source of the leak identified? **Yes** Repair as necessary. GO to Pinpoint Test **E.** **No** Install a new diagnostic module tank leakage module. GO to Pinpoint Test **E.**

PINPOINT TEST E : REPAIR VALIDATION TESTS	
TEST CONDITIONS	**DETAILS/RESULTS/ACTIONS**
E1: REPAIR VALIDATION TEST 1	
	1 Using the manufacturer approved diagnostic system, perform routine - Evaporative System Diagnostic Check - and use the combustible gas detector to check for leaks
	Test passed? **Yes** Repair complete **No** Contact Dealer Technical Support

DTC INDEX

For a list of Diagnostic Trouble Codes (DTCs) that could be logged on this vehicle, please refer to Section 100-00.

ELECTRONIC ENGINE CONTROLS – V8 S/C 5.0L PETROL

BRAKE PEDAL POSITION (BPP) SWITCH ADJUSTMENT (G1395342)

GENERAL PROCEDURES

CHECK

1. Remove the brake pedal rubber.

2. **NOTE:**

   Make sure that the dial test indicator (DTI) gauge is in line with the brake pedal movement.



Position the DTI gauge on a suitable mounting block, as illustrated.

3. With the aid of another technician, gently press the brake pedal until the stop lamps illuminate.

4. **NOTE:**

> The specification is that the stop lamps should illuminate at between 5.5mm and 8.5mm brake pedal travel.

Note the measurement of the brake pedal travel from rest position until the stop lamps illuminated.

ADJUST

NOTE:

The Brake Pedal Position Switch is self adjusting when removed and installed.

1. Remove and install Brake Pedal Position Switch.
   For additional information, refer to: Stoplamp Switch (417-01 Exterior Lighting, Removal and Installation).

2. Check the adjustment of the stop lamp switch by following the **Check** procedure in this procedure and carry out the **Adjust** procedure if required.

ELECTRONIC ENGINE CONTROLS – V8 S/C 5.0L PETROL

CAMSHAFT POSITION (CMP) SENSOR LH (G1086656)

REMOVAL AND INSTALLATION

18.30.25	SENSOR – CAMSHAFT POSITION (CMP) – LH – RENEW	AJ V8, SUPERCHARGED	0.3	USED WITHINS	+

REMOVAL

NOTE:

Removal steps in this procedure may contain installation details.

1. Disconnect the battery ground cable.
   Refer to: Specifications (414-00 Battery and Charging System - General Information, Specifications).

2. **WARNING:**

   Make sure to support the vehicle with axle stands.

Raise and support the vehicle.

3. Refer to: Thermostat Housing - V8 S/C 5.0L Petrol (303-03A Engine Cooling - V8 5.0L Petrol/V8 S/C 5.0L Petrol, Removal and Installation).

4. **NOTE:**

> Some variation in the illustrations may occur, but the essential information is always correct.

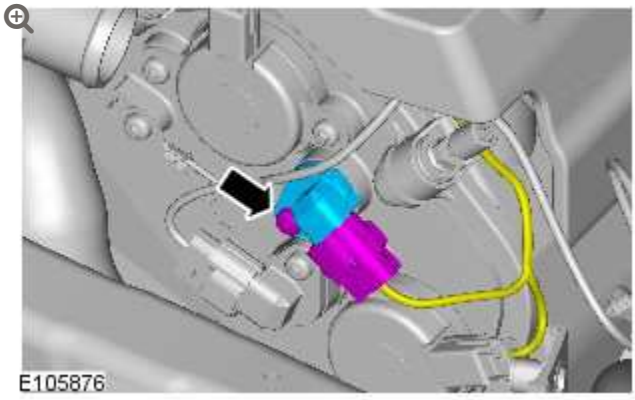

Torque: **10 Nm**

INSTALLATION

1. **CAUTIONS:**

> - Make sure that the mating faces are clean and free of foreign material.
> - Make sure that the sensor tip is clean and free of foreign material.

NOTE:

Lubricate the O-ring seal with clean engine oil.

To install, reverse the removal procedure.

ELECTRONIC ENGINE CONTROLS – V8 S/C 5.0L PETROL

CAMSHAFT POSITION (CMP) SENSOR RH (G1220847)

REMOVAL AND INSTALLATION

18.30.23	SENSOR – CAMSHAFT POSITION (CMP) – EXHAUST CAMSHAFT – RENEW	5000 CC, AJ V8, SUPERCHARGED	1.2	USED WITHINS	+

REMOVAL

NOTE:

Removal steps in this procedure may contain installation details.

1. Disconnect the battery ground cable.
   Refer to: Specifications (414-00 Battery and Charging System - General Information, Specifications).

2.

WARNING:

Make sure to support the vehicle with axle stands.

Raise and support the vehicle.

3. Refer to: Thermostat Housing - V8 S/C 5.0L Petrol (303-03A Engine Cooling - V8 5.0L Petrol/V8 S/C 5.0L Petrol, Removal and Installation).

4. **NOTE:**

Some variation in the illustrations may occur, but the essential information is always correct.

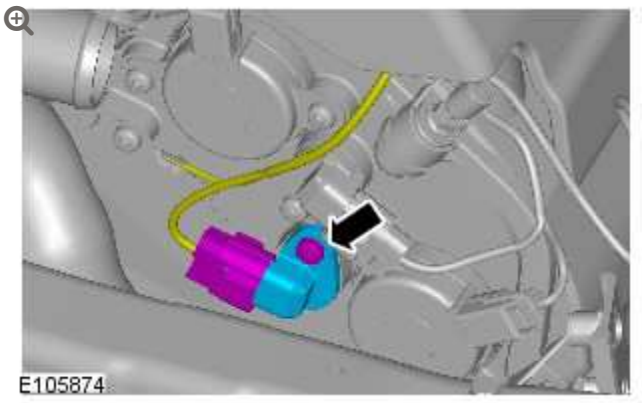

- *Torque:* **10 Nm**

INSTALLATION

1.

CAUTIONS:

- Make sure that the mating faces are clean and free of foreign material.
- Make sure that the sensor tip is clean and free of foreign material.

NOTE:

Lubricate the O-ring seal with clean engine oil.

To install, reverse the removal procedure.

CATALYST MONITOR SENSOR LH (G1225148)

REMOVAL AND INSTALLATION

REMOVAL

NOTE:

Removal steps in this procedure may contain installation details.

1. Disconnect the battery ground cable.
   Refer to: Specifications (414-00, Specifications).

2. **WARNING:**

   Make sure to support the vehicle with axle stands.

   Raise and support the vehicle.

3.

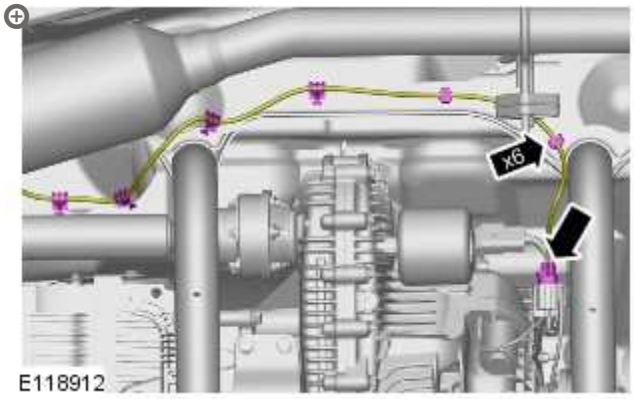

4.

CAUTION:

Make sure that the mating faces are clean and free of foreign material.

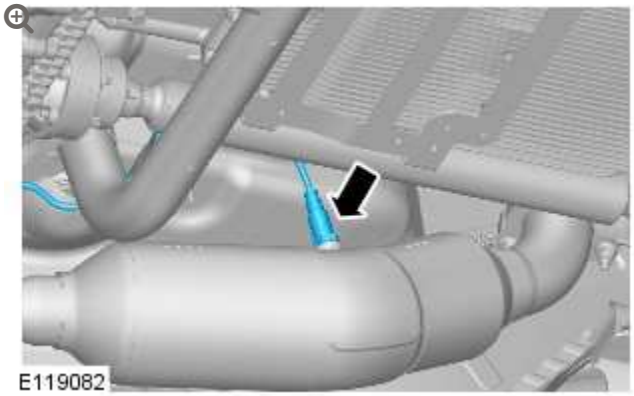

Torque: **48 Nm**

INSTALLATION

1.

CAUTIONS:

- Make sure the anti-seize compound does not contact the HO2S tip.
- If accidentally dropped or knocked install a new sensor.
- Make sure the HO2S wiring harness is not twisted more than 180 degrees and is not in contact with either the exhaust or driveshaft.

NOTE:

If the original sensor is to be installed, apply lubricant meeting specification ESE-M12A4-A to the thread of the sensor.

To install, reverse the removal procedure.

ELECTRONIC ENGINE CONTROLS – V8 S/C 5.0L PETROL

CATALYST MONITOR SENSOR RH (G1225149)

REMOVAL AND INSTALLATION

REMOVAL

NOTE:

Removal steps in this procedure may contain installation details.

1. Disconnect the battery ground cable.
   Refer to: Specifications (414-00, Specifications).

2. **WARNING:**

   Make sure to support the vehicle with axle stands.

   Raise and support the vehicle.

3.

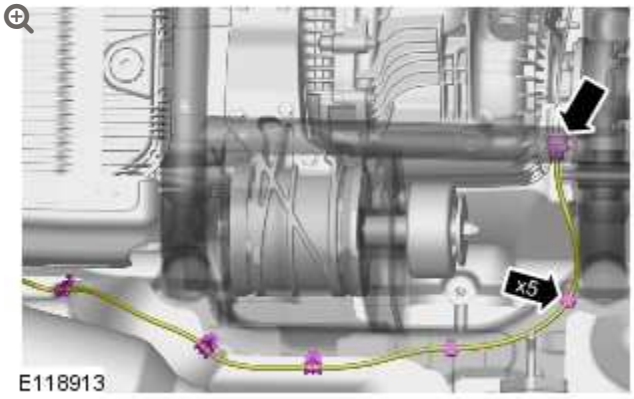

4.

CAUTION:

Make sure that the mating faces are clean and free of foreign material.

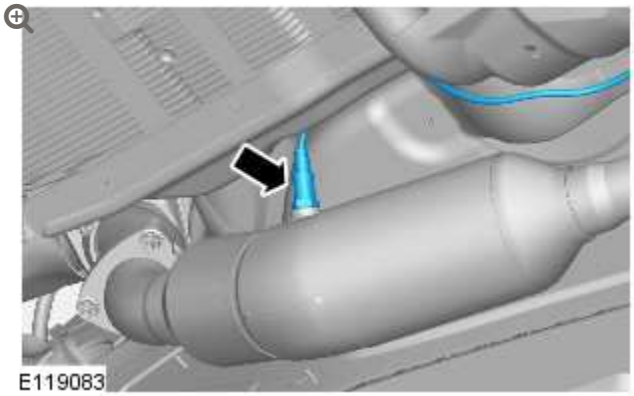

Torque: **48 Nm**

INSTALLATION

1.

CAUTIONS:

- Make sure the anti-seize compound does not contact the HO2S tip.
- If accidentally dropped or knocked install a new sensor.
- Make sure the HO2S wiring harness is not twisted more than 180 degrees and is not in contact with either the exhaust or driveshaft.

NOTE:

If the original sensor is to be installed, apply lubricant meeting specification ESE-M12A4-A to the thread of the sensor.

To install, reverse the removal procedure.

ELECTRONIC ENGINE CONTROLS - V8 S/C 5.0L PETROL

CRANKSHAFT POSITION (CKP) SENSOR (G1224146)

REMOVAL AND INSTALLATION

18.30.12	SENSOR - CRANKSHAFT POSITION (CKP) - RENEW	5000 CC, AJ V8	0.3	USED WITHINS	+

REMOVAL

NOTE:

Removal steps in this procedure may contain installation details.

1. **WARNING:**

   Make sure to support the vehicle with axle stands.

   Raise and support the vehicle.

2. Disconnect the battery ground cable.

Refer to: Specifications (414-00 Charging System - General Information, Specifications).

3. Refer to: Engine Undershield (501-02 Front End Body Panels, Removal and Installation).

4.

CAUTION:

Before the disconnection or removal of any components, ensure the area around joint faces and connections are clean. Plug any open connections to prevent contamination.

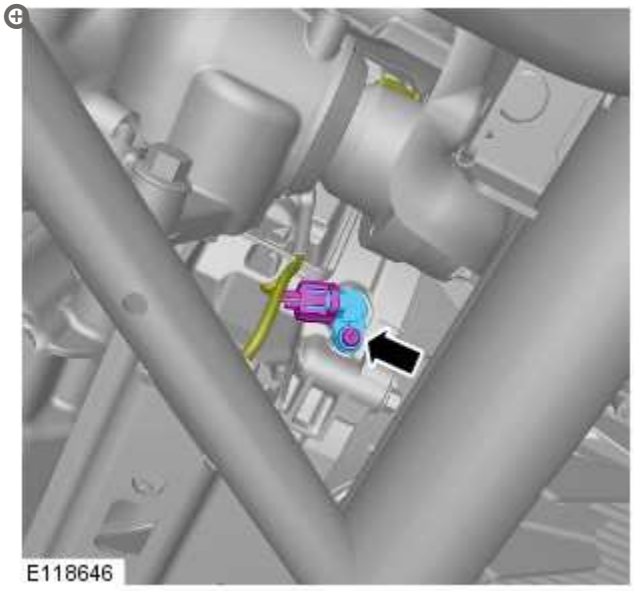

Remove the crankshaft position (CKP) sensor.
Torque: **10 Nm**

INSTALLATION

1.

CAUTIONS:

- Make sure that the mating faces are clean and free of foreign material.
- Make sure that the component is clean, free of foreign material and lubricant.

To install, reverse the removal procedure.

2. Using the approved diagnostic equipment, clear the powertrain control module (PCM) adaptions.

ELECTRONIC ENGINE CONTROLS – V8 S/C 5.0L PETROL

DIAGNOSIS AND TESTING

DIAGNOSIS OF BOSCH HEATED OXYGEN SENSORS (HO2S)

A full description of oxygen sensor monitoring, can be found in the workshop manual Documents Tab / Diagnostics Section / OBD II System Information

CAUTION:

Diagnosis by substitution from a donor vehicle is **NOT** acceptable. Substitution of control modules does not guarantee confirmation of a fault and may also cause additional faults in the vehicle being checked and/or the donor vehicle

NOTES:

- **Check and rectify basic faults before beginning diagnostic routines involving pinpoint tests**
- Generic scan tools may not read the codes listed, or may read only 5-digit codes. Match the 5 digits from the scan tool to the first 5 digits of the 7-digit code listed to identify the fault (the last 2 digits give extra information read by the manufacturer-approved diagnostic system).
- When performing voltage or resistance tests, always use a digital multimeter accurate to three decimal places, and with an up-to-date calibration certificate. When testing resistance always take the resistance of the digital multimeter leads into account.
- Inspect connectors for signs of water ingress, and pins for damage and/or corrosion.
- If DTCs are recorded and, after performing the pinpoint tests, a fault is not present, an intermittent concern may be the cause. Always check for loose connections and corroded terminals.
- Check DDW for open campaigns. Refer to the corresponding bulletins and SSMs which may be valid for the specific customer complaint and carry out the recommendations as required.

The purpose of this document is to aid in the correct diagnosis of Bosch Heated Oxygen Sensors (HO2S) and to prevent unnecessary installation of new parts. It may be deemed after diagnosis that a particular sensor has failed, in this case it would be expected that only the failed sensor is replaced and **NOT** a complete vehicle set.

PRINCIPLE OF OPERATION

For a detailed description of electronic engine controls, refer to the relevant description and operation section of the workshop manual.

Heated Oxygen Sensor (HO2S) location

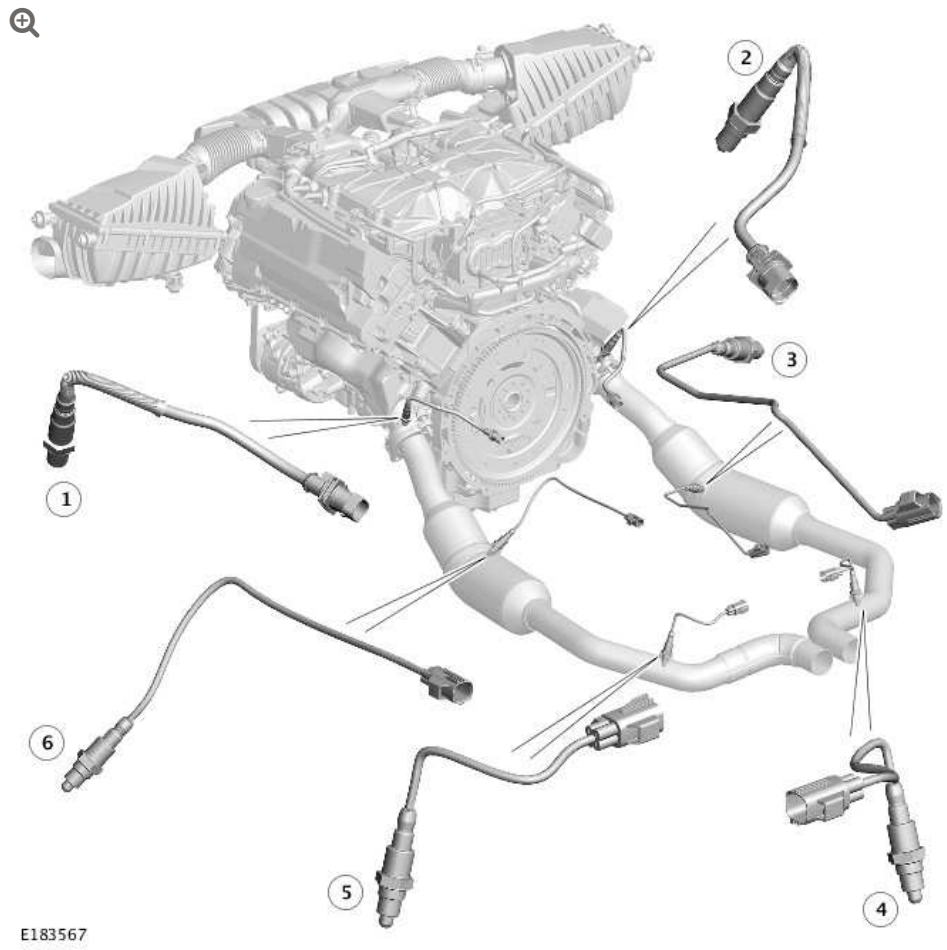

ITEM	DESCRIPTION
1	Heated Oxygen Sensor (HO2S) - Pre catalyst - Bank 2 sensor 1
2	Heated Oxygen Sensor (HO2S) - Pre catalyst - Bank 1 sensor 1
3	Heated Oxygen Sensor (HO2S) - Mid catalyst - Bank 1 sensor 2
4	Heated Oxygen Sensor (HO2S) - Post catalyst - Bank 1 sensor 3
5	Heated Oxygen Sensor (HO2S) - Post catalyst - Bank 2 sensor 3
6	Heated Oxygen Sensor (HO2S) - Mid catalyst - Bank 2 sensor 2

INSPECTION AND VERIFICATION

1. Verify the customer concern.
2. Visually inspect for obvious signs of mechanical or electrical damage.

Visual Inspection

MECHANICAL	ELECTRICAL
▪ Heated Oxygen Sensor (HO2S) incorrect installation ▪ Heated Oxygen Sensor (HO2S) contamination by incorrect fuel or oil ▪ Heated Oxygen Sensor (HO2S) degraded ▪ Exhaust system leakage ▪ Exhaust system restriction ▪ Air intake system leakage ▪ Mass air flow sensor contamination ▪ Incorrect fuel pressure ▪ Pipe detached or union leakage between intake manifold and cylinder head	▪ Connector is disconnected, connector pin is backed out, connector pin corrosion ▪ Fuses ▪ Wiring harness ▪ Electrical connector(s)

3. If an obvious cause for an observed or reported concern is found, correct the cause (if possible) before proceeding to the next step.
4. **Using the approved diagnostic tool, check for Diagnostic Trouble Codes (DTCs).**
5. Refer to the DTC help text in Section 100-00 for diagnostic help specific to the logged DTC(s).

HEATED OXYGEN SENSOR (HO2S) ACTIVATION REQUIREMENTS

NOTE:

> If the sensor has not become active, then DTCs will not be logged.

The drive cycle required to activate all of the Heated Oxygen Sensor (HO2S) can vary greatly in time. This is dependent on all of the sensors reaching 'dew point' during previous drive cycles. 'Dew point' is where the moisture content in the exhaust has evaporated and can no longer damage the Heated Oxygen Sensor (HO2S). The closer a Heated Oxygen Sensor (HO2S) is to the engine, the faster it will achieve 'dew point'. Once a Heated Oxygen Sensor (HO2S) has reached 'dew point' the Heated Oxygen Sensor (HO2S) heating is activated and shortly afterwards the Heated Oxygen Sensor (HO2S) will be functional. **Once functional the Heated Oxygen Sensor (HO2S) diagnostics become active and can report any error states with a DTC.**

VIEWING OPERATION OF HEATED OXYGEN SENSOR (HO2S)

Using Datalogger view the output signals for all Heated Oxygen Sensors (HO2S) and confirm correct operation. As each Heated Oxygen Sensor (HO2S) becomes active the output signal can be seen reacting to changes in engine speed/load.

NOTE:

> Heated Oxygen Sensors (HO2S) will become functional at different times, depending on their location within the exhaust system and the previous drive cycles. See 'Drive Cycle' section below for further information.

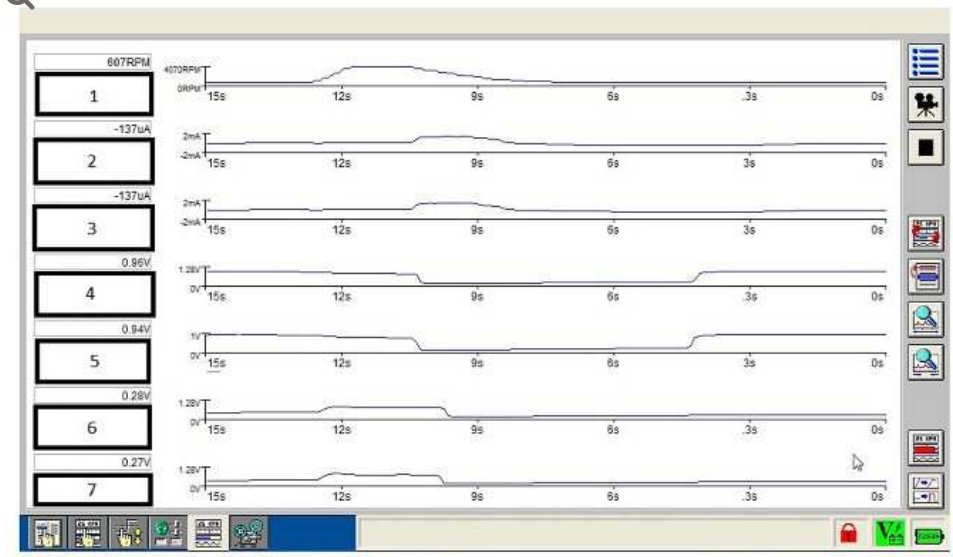

E189631

ITEM	DESCRIPTION
1	Engine speed
2	Oxygen Sensor Current Bank 1 sensor 1
3	Oxygen Sensor Current Bank 2 sensor 1
4	Oxygen Sensor Output Voltage Bank 1 - sensor 2
5	Oxygen Sensor Output Voltage Bank 2 - sensor 2
6	Oxygen Sensor Output Voltage Bank 1 - sensor 3
7	Oxygen Sensor Output Voltage Bank 2 - sensor 3

HEATED OXYGEN SENSOR DATALOGGER SIGNALS

PID	DESCRIPTION	ACTION
BANK 1		
Datalogger signal for Heated Oxygen Sensor (HO2S) - Pre catalyst - Bank 1 sensor 1		
0x03A1	Oxygen Sensor (O2S) Heater Duty Cycle Bank 1 Sensor 1	Using the manufacturer approved diagnostic system check datalogger signal.

PID	DESCRIPTION	ACTION
		The signal is a duty cycle displayed in % varying between limits
0xF434	Oxygen Sensor Current Bank 1 sensor 1	Using the manufacturer approved diagnostic system check datalogger signal. The signal is displayed in mA varying between limits
Datalogger signal for Heated Oxygen Sensor (HO2S) - Mid catalyst - Bank 1 sensor 2		
0x03A2	Oxygen Sensor (O2S) Heater Duty Cycle Bank 1 Sensor 2	Using the manufacturer approved diagnostic system check datalogger signal. The signal is a pulse width modulated signal digital output operating between 0 and 1
0xF415	Oxygen Sensor Output Voltage Bank 1 - sensor 2	Using the manufacturer approved diagnostic system check datalogger signal. The signal is displayed in volts varying between limits
Datalogger signal for Heated Oxygen Sensor (HO2S) - Post catalyst - Bank 1 sensor 3		
0x03A3	Oxygen sensor heater duty cycle - Bank 1 sensor 3	Using the manufacturer approved diagnostic system check datalogger signal. The signal is a pulse width modulated signal digital output operating between 0 and 1
0xF416	Oxygen Sensor Output Voltage Bank 1 - sensor 3	Using the manufacturer approved diagnostic system check datalogger signal. The signal is displayed in volts varying between limits
BANK 2		
Datalogger signal for Heated Oxygen Sensor (HO2S) - Pre catalyst - Bank 2 sensor 1		
0x03A4	Oxygen Sensor (O2S) Heater Duty Cycle Bank 2 Sensor 1	Using the manufacturer approved diagnostic system check datalogger signal. The signal is a duty cycle displayed in % varying between limits
0xF438	Oxygen Sensor Current Bank 2 sensor 1	Using the manufacturer approved diagnostic system check datalogger signal. The signal is displayed in mA varying between limits

PID	DESCRIPTION	ACTION
Datalogger signal for Heated Oxygen Sensor (HO2S) - Mid catalyst - Bank 2 sensor 2		
0x03A5	Oxygen Sensor (O2S) Heater Duty Cycle Bank 2 Sensor 2	Using the manufacturer approved diagnostic system check datalogger signal. The signal is a pulse width modulated signal digital output operating between 0 and 1
0xF419	Oxygen Sensor Output Voltage Bank 2 - sensor 2	Using the manufacturer approved diagnostic system check datalogger signal. The signal is displayed in volts varying between limits
Heated Oxygen Sensor (HO2S) - Post catalyst - Bank 2 sensor 3		
0x03A6	Oxygen sensor heater duty cycle - Bank 2 sensor 3	Using the manufacturer approved diagnostic system check datalogger signal. The signal is a pulse width modulated signal digital output operating between 0 and 1
0xF41A	Oxygen Sensor Output Voltage Bank 2 - sensor 3	Using the manufacturer approved diagnostic system check datalogger signal. The signal is displayed in volts varying between limits

DRIVE CYCLE

Pre catalyst and Mid catalyst sensors

Drive the vehicle until the engine is fully warm (greater than +80 °C). The drive cycle should include driving the vehicle in a steady throttle condition at a road speed of 30 mph or above for a duration of at least 2 minutes. (Once functional the oxygen sensor output signal can be seen reacting to changes in engine speed/load or if the sensor is faulty a DTC(s) will be raised).

Post catalyst sensors

Post catalyst sensor monitoring can take over 30 minutes of driving to become active if the 'dew point' has not been achieved in

previous drive cycles or an EMS ECU battery reset has occurred. The Drive cycle should consist of a constant speed and load allowing sufficient heat to build up in the exhaust system.

PINPOINT TEST A : ELECTRONIC ENGINE CONTROLS PINPOINT TEST	
TEST CONDITIONS	DETAILS/RESULTS/ACTIONS
A1: PERFORMANCE CHECK OF HEATED OXYGEN SENSOR(S) (HO2S)	
	NOTES: ▪ Refer to the **Heated Oxygen Sensor (HO2S) location** section for information on Heated Oxygen Sensor (HO2S) locations ▪ Oxygen sensors will become functional at different times, depending on their location within the exhaust system and the previous drive cycles 1 Refer to the **Heated Oxygen Sensor (HO2S) Activation Requirements** and **Drive Cycle** sections for information on Heated Oxygen Sensor (HO2S) activation requirements and drive cycles
	NOTE: Pre catalyst oxygen sensor - Signal displayed in mA - Signal changes either side of 0mA as fueling changes from lean to rich 2 Using the manufacturer approved diagnostic system check datalogger signal Oxygen Sensor Current Bank 1 - sensor 1 (low res)
	3 Using the manufacturer approved diagnostic system check datalogger signal Oxygen Sensor Current Bank 2 - sensor 1 (low res)

PINPOINT TEST A : ELECTRONIC ENGINE CONTROLS PINPOINT TEST	
	NOTE: Mid and post catalyst oxygen sensor - Signal displayed in Volts - Signal changes between 0 and 1 volt as fueling switches from lean to rich **4** Using the manufacturer approved diagnostic system check datalogger signal Oxygen Sensor Output Voltage Bank 1 - sensor 3
	5 Using the manufacturer approved diagnostic system check datalogger signal Oxygen Sensor Output Voltage Bank 1 - sensor 2
	6 Using the manufacturer approved diagnostic system check datalogger signal Oxygen Sensor Output Voltage Bank 2 - sensor 2
	7 Using the manufacturer approved diagnostic system check datalogger signal Oxygen Sensor Output Voltage Bank 2 - sensor 3
	8 View the output signals for each Heated Oxygen Sensor (HO2S). Once active each sensor can be seen reacting to changes in engine speed/load
	Observe the oxygen sensor signal responsible for the DTC. Is the sensor functioning correctly? **Yes** No failure is found. Clear DTCs and perform road test to confirm no fault is present. Refer to the **Heated Oxygen Sensor (HO2S) Activation Requirements** and **Drive Cycle** sections for information on Heated Oxygen Sensor (HO2S) activation requirements and drive cycles **No** Proceed to the next step
A2: ELECTRICAL CHECK OF HEATED OXYGEN SENSOR(S) (HO2S) HEATER POWER SUPPLY	

PINPOINT TEST A : ELECTRONIC ENGINE CONTROLS PINPOINT TEST	
	NOTES: ▪ Refer to the **Heated Oxygen Sensor (HO2S) location** section for information on Heated Oxygen Sensor (HO2S) locations ▪ Carry out the following electrical checks **ONLY** on the sensor(s) with the related DTC(s) logged **1** Refer to the electrical circuit diagrams and check the heater power supply
	2 Switch ignition OFF
	3 Disconnect Heated Oxygen Sensor (HO2S) (with the related DTC(s) logged)
	4 Switch ignition ON
	5 **Pre catalyst oxygen sensor.** Measure the voltage between pin 4 and battery ground
	6 **Mid and post catalyst oxygen sensor.** Measure the voltage between pin 1 and battery ground
	Is the measured voltage between 11 and 14 volts? **Yes** Proceed to the next step **No** Check for fuse failure Check connectors for signs of water ingress, and pins for damage and/or corrosion Check for vehicle harness failure - Wiring integrity short circuit to ground, short circuit to power, open circuit, high resistance
A3: ELECTRICAL CHECK OF HEATED OXYGEN SENSOR(S) (HO2S) HEATER RESISTANCE	

PINPOINT TEST A : ELECTRONIC ENGINE CONTROLS PINPOINT TEST	
	NOTES: ▪ Refer to the **Heated Oxygen Sensor (HO2S) location** section for information on Heated Oxygen Sensor (HO2S) locations ▪ Carry out the following electrical checks **ONLY** on the sensor(s) with the related DTC(s) logged ▪ Remove multimeter internal resistance value from measurement **1** Refer to the electrical circuit diagrams and check the heater resistance
	2 Switch ignition OFF
	3 Ensure the Heated Oxygen Sensor (HO2S) connector is disconnected
	4 **Pre catalyst oxygen sensor.** Measure the resistance of the sensor between pin 4 and pin 3
	5 **Mid and post catalyst oxygen sensor.** Measure the resistance of the sensor between pin 1 and pin 2
	Is the measured resistance between 1 and 15 Ohms? **Yes** Check connectors for signs of water ingress, and pins for damage and/or corrosion Check for vehicle harness failure - Wiring integrity short circuit to ground, short circuit to power, open circuit, high resistance **No** Install a new Heated Oxygen Sensor (HO2S) component

DTC INDEX

For a list of Diagnostic Trouble Codes (DTCs) that could be logged on this vehicle, please refer to Section 100-00.

2012.0 RANGE ROVER (LM), 303-14

ELECTRONIC ENGINE CONTROLS – V8 S/C 5.0L PETROL

DESCRIPTION AND OPERATION

COMPONENT LOCATION – SHEET 1 OF 3

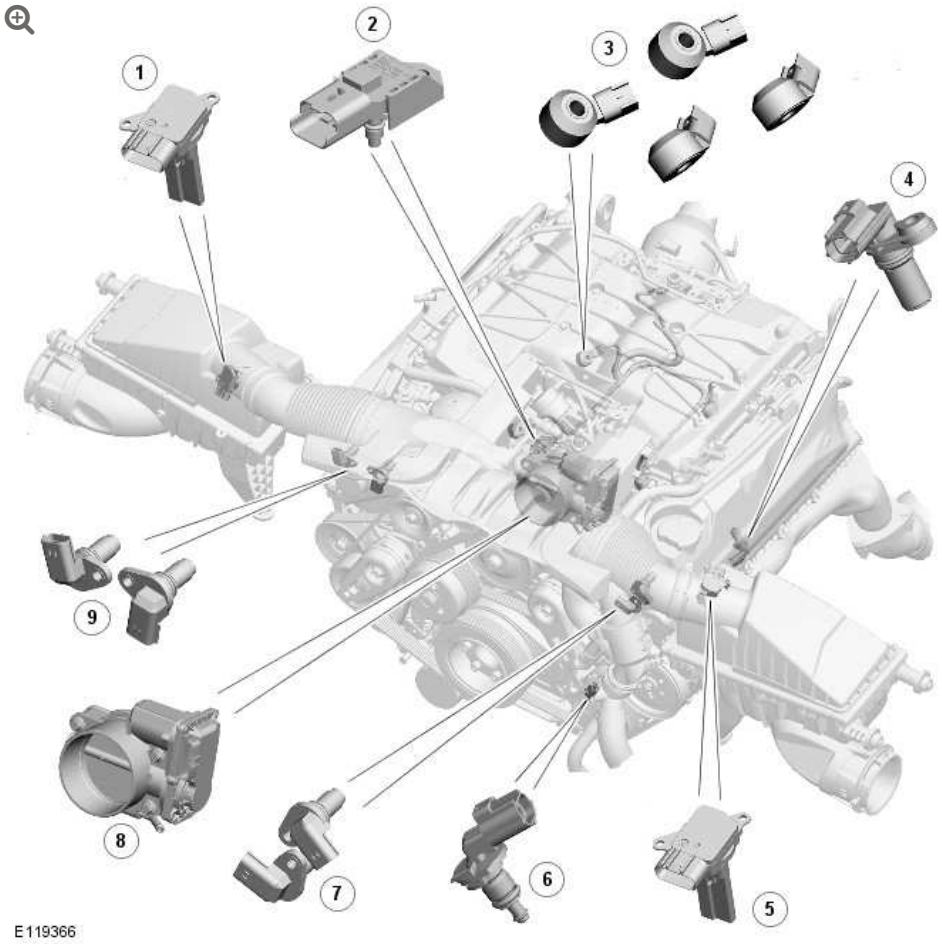

ITEM	DESCRIPTION
1	MAFT (mass air flow and temperature) sensor
2	MAP (manifold absolute pressure) sensor
3	Knock sensors
4	CKP (crankshaft position) sensor
5	MAFT sensor
6	ECT (engine coolant temperature) sensor (ECT 2)
7	CMP (camshaft position) sensors
8	Electronic throttle
9	CMP sensors

COMPONENT LOCATION – SHEET 2 OF 3

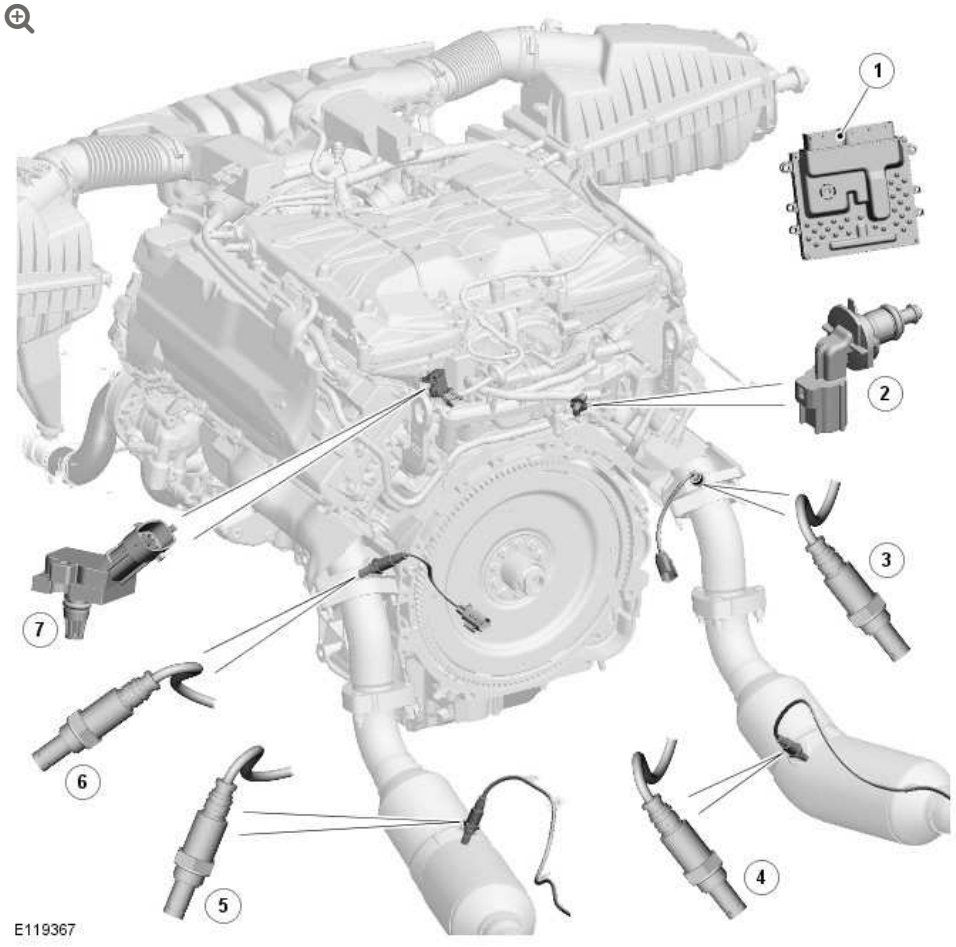

ITEM	DESCRIPTION
1	ECM (engine control module)
2	ECT sensor (ECT 1)
3	Upstream HO2S (heated oxygen sensor)
4	Downstream HO2S
5	Downstream HO2S
6	Upstream HO2S
7	MAPT (manifold absolute pressure and temperature) sensor

COMPONENT LOCATION – SHEET 3 OF 3

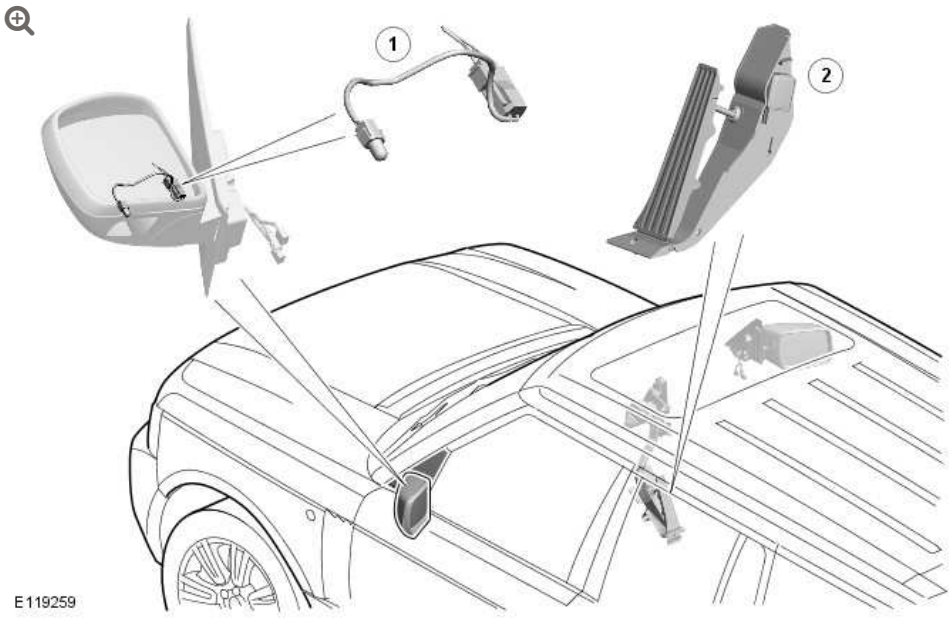

ITEM	DESCRIPTION
1	AAT (ambient air temperature) sensor
2	APP (accelerator pedal position) sensor

INTRODUCTION

The EEC (electronic engine control) system operates the engine to generate the output demanded by the accelerator pedal and loads imposed by other systems. The EEC system has an ECM (engine control module) that uses a torque-based strategy to evaluate inputs from sensors and other systems, then produces outputs to engine actuators to produce the required torque.

The EEC system controls the following:

- Charge air
- Fueling
- Ignition timing

- Valve timing
- Cylinder knock
- Idle speed
- Engine cooling fan
- Evaporative emissions
- On-board diagnostics
- Immobilization system interface
- Speed control.

ENGINE CONTROL MODULE

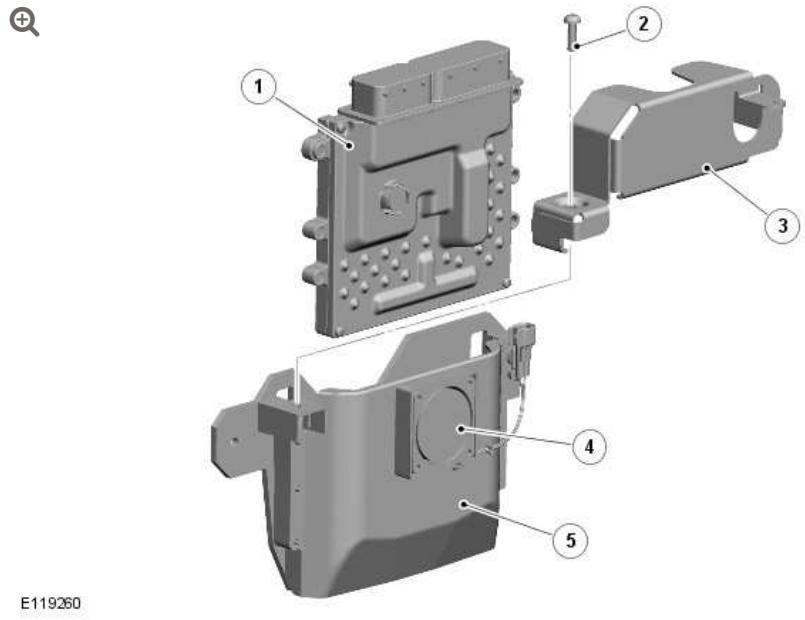

ITEM	DESCRIPTION
1	ECM
2	Screw
3	Cover
4	Cooling fan
5	ECM and cooling fan mounting bracket

The ECM is installed in the passenger side protective box in the engine compartment, on a bracket attached to the suspension housing. The bracket also contains an electric cooling fan. The ECM, which has an internal temperature sensor, controls the operation of the cooling fan. While the ignition is on, the cooling fan receives a power supply from the ECM relay in the EJB (engine junction box). When cooling is required, the ECM connects the cooling fan to ground.

The ECM has the capability of adapting its fuel and ignition control outputs in response to several sensor inputs.

The ECM receives inputs from the following:

- CKP (crankshaft position) sensor.
- CMP (camshaft position) sensors (4 off).
- ECT (engine coolant temperature) sensor.
- Knock sensors (4 off).
- MAP (manifold absolute pressure) sensor.
- MAFT (mass air flow and temperature) sensors (2 off).
- MAPT (manifold absolute pressure and temperature) sensor.
- Throttle position sensor.
- Heated oxygen sensors (4 off).
- APP (accelerator pedal position) sensor.
- Ambient air temperature sensor.
- FRP (fuel rail pressure) sensor.
  For additional information, refer to: Fuel Charging and Controls (303-04B Fuel Charging and Controls - V8 S/C 5.0L Petrol, Description and Operation).
- Engine cooling fan.
  For additional information, refer to: Engine Cooling (303-03A

Engine Cooling - V8 5.0L Petrol/V8 S/C 5.0L Petrol, Description and Operation).

- Stoplamp switch.
  For additional information, refer to: Anti-Lock Control - Traction Control (206-09A Anti-Lock Control - Traction Control, Description and Operation).
- Speed control cancel/suspend switch.
  For additional information, refer to: Speed Control (310-03 Speed Control - V8 5.0L Petrol/V8 S/C 5.0L Petrol, 5.0L, Description and Operation).
- Oil level and temperature sensor.
  For additional information, refer to: Engine (303-01B Engine - V8 S/C 5.0L Petrol, Description and Operation).
- Fuel LP (low pressure) sensor.
  For additional information, refer to: Fuel Tank and Lines (310-01 Fuel Tank and Lines - V8 5.0L Petrol/V8 S/C 5.0L Petrol, Description and Operation).
- Fuel pump driver module.
  For additional information, refer to: Fuel Tank and Lines (310-01 Fuel Tank and Lines - V8 5.0L Petrol/V8 S/C 5.0L Petrol, Description and Operation).

The ECM provides outputs to the following:

- Electronic throttle.
- Main relay.
- Heaters elements of the heated oxygen sensors (4 off).
- Fuel injectors (8 off).
  For additional information, refer to: Fuel Charging and Controls (303-04B Fuel Charging and Controls - V8 S/C 5.0L Petrol, Description and Operation).

- Ignition coils (8 off).
  For additional information, refer to: Engine Ignition (303-07 Engine Ignition - V8 5.0L Petrol/V8 S/C 5.0L Petrol, Description and Operation).
- VCT (variable camshaft timing) solenoids (4 off).
  For additional information, refer to: Engine (303-01B Engine - V8 S/C 5.0L Petrol, Description and Operation).
- EVAP (evaporative emission) canister purge valve. For additional information, refer to 303-15: Evaporative Emissions - 5.0L, Description and Operation.
- Engine starter relay.
  For additional information, refer to: Starting System (303-06 Starting System - V8 5.0L Petrol/V8 S/C 5.0L Petrol, Description and Operation).
- Engine cooling fan.
  For additional information, refer to: Engine Cooling (303-03A Engine Cooling - V8 5.0L Petrol/V8 S/C 5.0L Petrol, Description and Operation).
- Charge air coolant pump relay.
  For additional information, refer to: Supercharger Cooling (303-03B Supercharger Cooling, Description and Operation).
- Generator.
  For additional information, refer to: Generator (414-02 Generator and Regulator - V8 5.0L Petrol/V8 S/C 5.0L Petrol, Description and Operation).
- HP fuel pumps.
  For additional information, refer to: Fuel Charging and Controls (303-04B Fuel Charging and Controls - V8 S/C 5.0L Petrol, Description and Operation).
- Fuel pump driver module.
  For additional information, refer to: Fuel Tank and Lines (310-01

Fuel Tank and Lines - V8 5.0L Petrol/V8 S/C 5.0L Petrol, Description and Operation).

- DMTL (diagnostic module - tank leakage). For additional information, refer to 303-15: Evaporative Emissions - 5.0L, Description and Operation.

CRANKSHAFT POSITION SENSOR



The CKP sensor is an inductive sensor that allows the ECM to determine the angular position of the crankshaft and the engine speed.

The CKP sensor is installed in the rear left side of the sump body, in line with the engine drive plate. The sensor is secured with a single screw and sealed with an O-ring. A two pin electrical connector provides the interface with the engine harness.

The head of the CKP sensor faces a reluctor ring pressed into the outer circumference of the engine drive plate. The reluctor ring has a 60 minus 2 tooth pattern. There are 58 teeth at 6° intervals, with two teeth removed to provide a reference point with a centerline that is 21° BTDC (before top dead center) on cylinder 1 of bank A.

If the CKP sensor fails, the ECM:

- Uses signals from the CMP sensors to determine the angular position of the crankshaft and the engine speed
- Adopts a limp home mode where engine speed is limited to a maximum of 3000 rev/min.

With a failed CKP sensor, engine starts will require a long crank time while the ECM determines the angular position of the crankshaft.

CAMSHAFT POSITION SENSORS



The CMP sensors are MRE (magneto resistive element) sensors that allow the ECM to determine the angular position of the camshafts. MRE sensors produce a digital output which allows the ECM to detect speeds down to zero.

The four CMP sensors are installed in the front upper timing covers, one for each camshaft.

Each CMP sensor is secured with a single screw and sealed with an O-ring. On each CMP sensor, a three pin electrical connector provides the interface with the engine harness.

The head of each CMP sensor faces a sensor wheel attached to the front of the related VCT unit.

If a CMP sensor fails, the ECM:

- Defaults to base mapping for the ignition timing, with no cylinder correction
- Disables the VCT system.

ENGINE COOLANT TEMPERATURE SENSORS

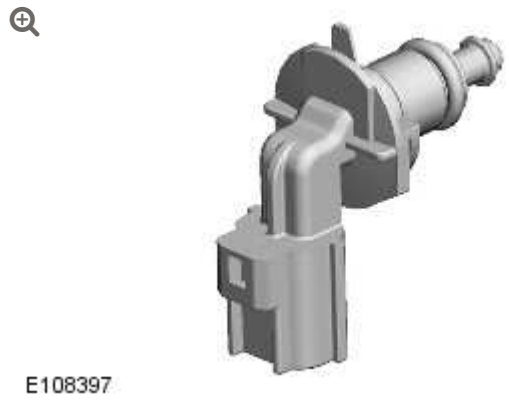

The ECT sensors are NTC (negative temperature coefficient) thermistors that allow the ECM to monitor the engine coolant temperature.

There are two identical ECT sensors installed, which are identified as ECT 1 and ECT 2. Each sensor is secured with a twist-lock and latch mechanism, and is sealed with an O-ring. A two pin electrical connector provides the interface between the sensor and the engine harness.

ECT 1

ECT 1 is installed in the heater manifold, at the rear of the RH (right-hand) cylinder head. The input from this sensor is used in calibration tables and by other systems.

If there is an ECT 1 fault, the ECM adopts an estimated coolant temperature. On the second consecutive trip with an ECT 1 fault, the ECM illuminates the MIL (malfunction indicator lamp).

ECT 2

ECT 2 is installed in the lower hose connector which attaches to the bottom of the thermostat. The input from this sensor is used for OBD (on-board diagnostic) 2 diagnostics and, in conjunction with the input from ECT 1, to confirm that the thermostat is functional.

If there is an ECT 2 fault, the ECM illuminates the MIL on the second consecutive trip.

KNOCK SENSORS

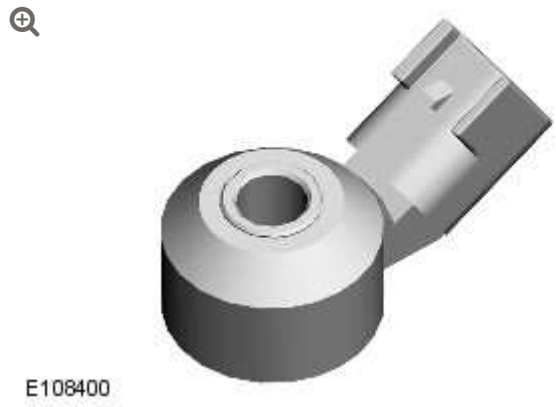

The knock sensors are piezo-ceramic sensors that allow the ECM to employ active knock control and prevent engine damage from pre-ignition or detonation.

Two knock sensors are installed on the inboard side of each cylinder head, one mid-way between cylinders 1 and 2, and one mid-way between cylinders 3 and 4. Each knock sensor is secured with a single screw. On each knock sensor, a two pin electrical connector provides the interface with the engine harness.

The ECM compares the signals from the knock sensors with mapped values stored in memory to determine when detonation occurs on individual cylinders. When detonation is detected, the ECM retards the ignition timing on that cylinder for a number of engine cycles, then gradually returns it to the original setting.

The ECM cancels closed loop control of the ignition system if the signal received from a knock sensor becomes implausible. In these circumstances the ECM defaults to base mapping for the ignition timing. This ensures the engine will not become damaged if low quality fuel is used. The MIL will not illuminate, although the driver may notice that the engine 'pinks' in some driving conditions and displays a drop in performance and smoothness.

The ECM calculates the default value if one sensor fails on each bank of cylinders.

MANIFOLD ABSOLUTE PRESSURE SENSOR

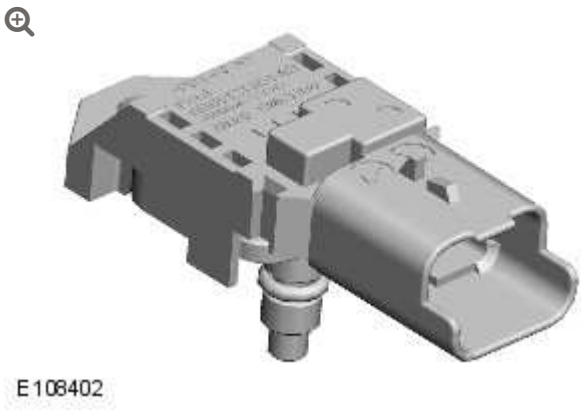

The MAP sensor allows the ECM to calculate the load on the engine, which is used in the calculation of fuel injection time.

The MAP sensor is installed in the air inlet of the SC (supercharger). The sensor is secured with a single screw and sealed with an O-ring. A three pin electrical connector provides the interface with the engine harness.

If the MAP sensor fails, the ECM adopts a default value of 1 bar (14.5 lbf/in.^{2}).

With a failed MAP sensor, the engine will suffer from poor starting, rough running and poor driveability.

MASS AIR FLOW AND TEMPERATURE SENSORS



The MAFT sensors allow the ECM to measure the mass and the temperature of the air flow into the engine. The mass air flow is measured with a hot film element in the sensor. The temperature of the air flow is measured with a NTC thermistor in the sensor. The mass air flow is used to determine the fuel quantity to be injected in order to maintain the stoichiometric air:fuel mixture required for correct operation of the engine and the catalytic converters.

There are two MAFT sensors installed, one in each air cleaner outlet duct. Each MAFT sensor is secured with two screws and sealed with an O-ring. On each MAFT sensor, a five pin electrical connector provides the interface with the engine harness.

If the hot film element signal fails the ECM invokes a software backup strategy to calculate the mass air flow from other inputs. Closed loop fuel control, closed loop idle speed control and evaporative emissions control are discontinued. The engine will suffer from poor starting, poor throttle response and, if the failure occurs while driving, the engine speed may dip before recovering.

If the NTC thermistor signal fails the ECM adopts a default value of 25 °C (77 °F) for the intake air temperature.

MANIFOLD ABSOLUTE PRESSURE AND TEMPERATURE SENSOR

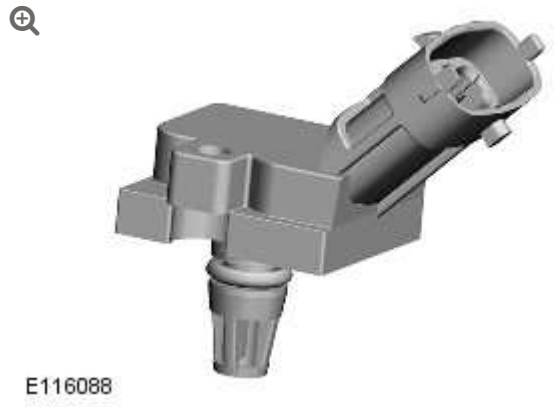

The MAPT sensor allows the ECM to calculate the air charge density immediately before it enters the cylinders. This is used to adjust the ignition timing relative to the boost pressure, and to monitor the performance of the charge air coolers.

The MAPT sensor is installed in the rear of the LH intake manifold. The sensor is secured with a single screw and sealed with an O-ring. A four pin electrical connector provides the interface with the engine harness.

THROTTLE POSITION SENSORS

The TP (throttle position) sensors allow the ECM to determine the position and angular rate of change of the throttle blade.

There are two TP sensors located in the electronic throttle. See below for details of the electronic throttle.

If a TP sensor fails, the ECM:

- Adopts a limp home mode where engine speed is limited to a maximum of approximately 2000 rev/min
- Discontinues evaporative emissions control

- Discontinues closed loop control of engine idle speed.

With a failed TP sensor, the engine will suffer from poor running and throttle response.

HEATED OXYGEN SENSORS



E119261

The heated oxygen sensors allow the ECM to measure the oxygen content of the exhaust gases, for closed loop control of the air:fuel mixture and for catalytic converter monitoring.

An upstream heated oxygen sensor is installed in the outlet of each exhaust manifold, which enables independent control of the air:fuel mixture for each cylinder bank. A downstream heated oxygen sensor is installed in each catalytic converter, which enables the performance of the catalytic converters to be monitored.

Oxygen sensors need to operate at high temperatures in order to function correctly. To achieve the high temperatures required, the sensors are fitted with heater elements that are controlled by a PWM (pulse width modulation) signal from the ECM. The heater elements are operated immediately after each engine start and during low load conditions when the temperature of the exhaust gases is insufficient to maintain the required sensor temperature. The PWM duty cycle is carefully controlled to prevent thermal shock to cold

sensors. A non-functioning heater delays the sensor's readiness for closed loop control and increases emissions.

The upstream heated oxygen sensors produce a constant voltage, with a variable current that is proportional to the lambda ratio. The downstream heated oxygen sensors produce an output voltage dependant on the ratio of the exhaust gas oxygen to the ambient oxygen.

The heated oxygen sensors age with mileage, increasing their response time to switch from rich to lean and lean to rich. This increase in response time influences the ECM closed loop control and leads to progressively increased emissions. Measuring the period of rich to lean and lean to rich switching monitors the response rate of the upstream sensors.

Diagnosis of electrical faults is continually monitored in both the upstream and downstream sensors. This is achieved by checking the signal against maximum and minimum threshold, for open and short circuit conditions.

If a heated oxygen sensor fails:

- The ECM defaults to open loop fueling for the related cylinder bank
- The CO (carbon monoxide) and emissions content of the exhaust gases increases
- The exhaust smells of rotten eggs (hydrogen sulphide).

With a failed heated oxygen sensor, the engine will suffer from unstable operation and reduced performance.

ACCELERATOR PEDAL POSITION SENSOR

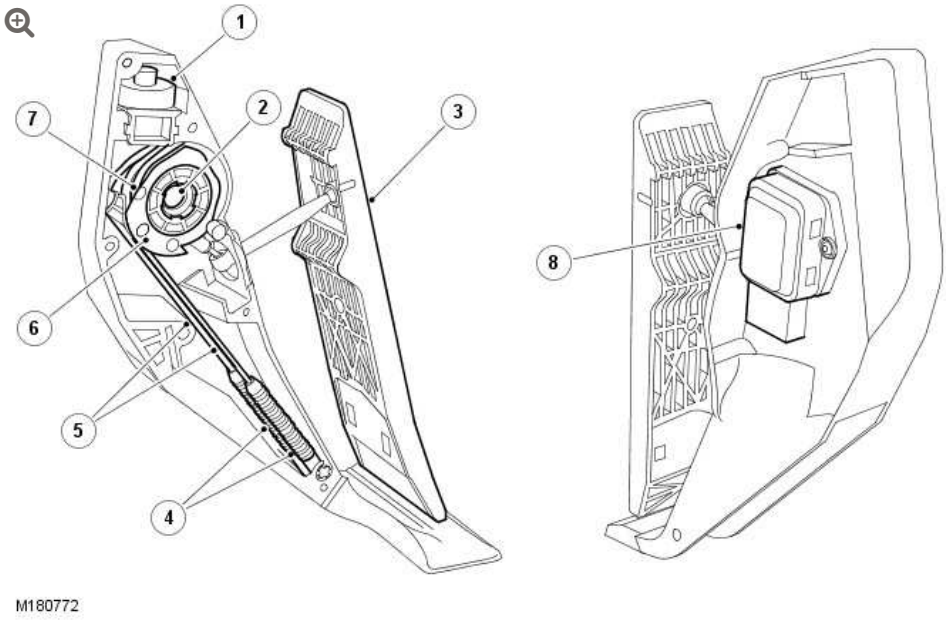

ITEM	DESCRIPTION
1	Detente mechanism
2	Sensor spigot
3	Pedal
4	Springs
5	Cables
6	Bush
7	Drum
8	APP sensor

The APP sensor allows the ECM to determine the driver requests for vehicle speed, acceleration and deceleration. The ECM uses this information to determine the setting of the electronic throttle.

The APP sensor is located on the accelerator pedal and secured with two Torx screws. The sensor has a six pin connector which provides the interface with the vehicle harness.

The APP sensor has a spigot which protrudes into the housing of the accelerator pedal and provides the pivot point for the pedal mechanism. The spigot has a slot which allows for a pin, which is attached to the sensor potentiometers, to rotate through approximately 90 degrees , which relates to pedal movement. The pedal is connected via a link to a drum, which engages with the sensor pin, changing the linear movement of the pedal into rotary movement of the drum. The drum has two steel cables attached to it. The cables are secured to two tension springs which are secured in the opposite end of the housing. The springs provide 'feel' on the pedal movement and require an effort from the driver similar to that of a cable controlled throttle. A detente mechanism is located at the forward end of the housing and is operated by a ball located on the drum. At near maximum throttle pedal movement, the ball contacts the detente mechanism. A spring in the mechanism is compressed and gives the driver the feeling of depressing a 'kickdown' switch when full pedal travel is achieved.

APP Sensor Output Graph

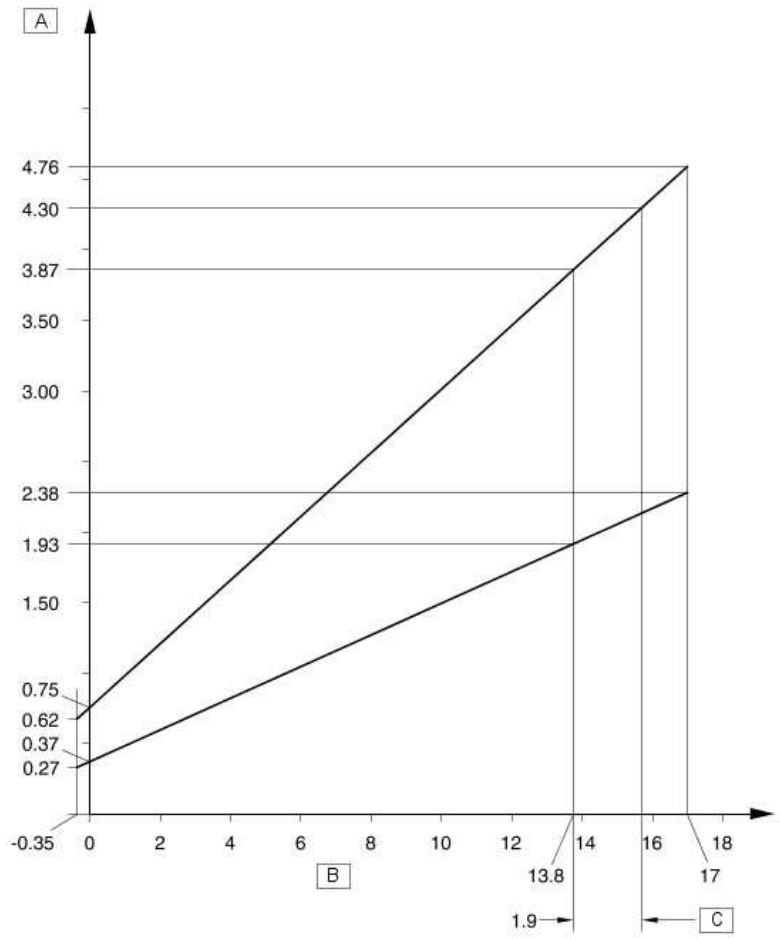

M180795

ITEM	DESCRIPTION
A	Voltage
B	APP sensor angle
C	Kick down angle

The APP sensor has two potentiometer tracks which each receive a 5 V input voltage from the ECM. Track 1 provides an output of 0.5 V with the pedal at rest and 2.0 V at 100% full throttle. Track 2 provides an output of 0.5 V with the pedal at rest and 4.5 V at 100% full throttle. The signals from the two tracks are used by the ECM to

determine fueling for engine operation and also by the ECM and the TCM (transmission control module) to initiate a kickdown request for the automatic transmission.

The ECM monitors the outputs from each of the potentiometer tracks and can determine the position, rate of change and direction of movement of the throttle pedal. The closed throttle position signal is used by the ECM to initiate idle speed control and overrun fuel cut-off.

The APP sensor signals are checked for range and plausibility. Should one signal fail, the ECM adopts a limp home mode, which limits the engine speed to 2000 rev/min maximum.

AMBIENT AIR TEMPERATURE SENSOR



The AAT (ambient air temperature) sensor is a NTC thermistor that allows the ECM to monitor the temperature of the air around the vehicle. The ECM uses the AAT input for a number of functions, including engine cooling fan control. The ECM also transmits the ambient temperature on the high speed CAN (controller area network) bus for use by other control modules.

The AAT sensor is installed in the LH (left-hand) exterior mirror, with the bulb of the sensor positioned over a hole in the bottom of the mirror casing.

The ECM supplies the sensor with a 5 V reference voltage and a ground, and translates the return signal voltage into a temperature.

If there is a fault with the AAT sensor, the ECM calculates the AAT from the temperature inputs of the MAFT sensors. If the AAT sensor and the temperature inputs of the MAFT sensors are all faulty, the ECM adopts a default ambient temperature of 20 °C (68 °F).

ELECTRONIC THROTTLE

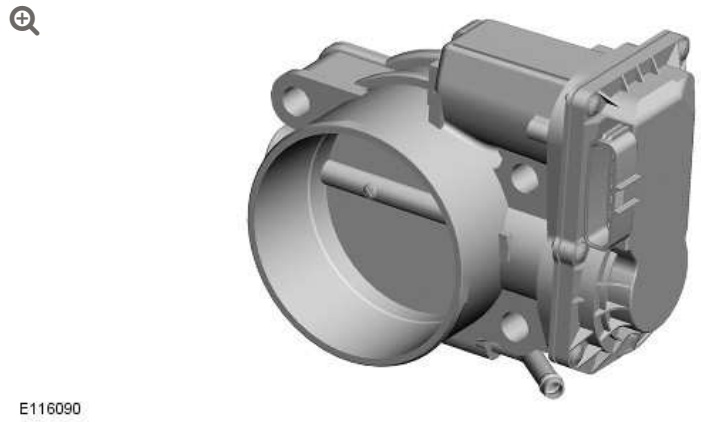

The ECM uses the electronic throttle to regulate engine torque.

The electronic throttle is installed between the T piece duct, of the intake air distribution and filtering system, and the inlet of the SC. For additional information, refer to: Intake Air Distribution and Filtering (303-12B Intake Air Distribution and Filtering - V8 S/C 5.0L Petrol, Description and Operation).

The throttle plate is operated by an electric DC (direct current) motor integrated into the throttle body. The ECM uses a PWM signal to control the DC motor. The ECM compares the APP sensor inputs against an electronic map to determine the required position of the throttle plate. The ECM and electronic throttle are also required to:

- Monitor requests for cruise control operation

- Automatically operate the electronic throttle for accurate cruise control
- Perform all dynamic stability control engine interventions
- Monitor and carry out maximum engine speed and road speed cut outs
- Provide different engine maps for the ride and handling optimization system.

A software strategy within the ECM calibrates the position of the throttle plate at the beginning of each ignition cycle. When the ignition is turned on, the ECM performs a self test and calibration routine by fully closing the throttle plate and then opening it again. This tests the default position springs and allows the ECM to learn the position of the closed hard stop. Subsequently the ECM keeps the throttle plate a minimum of 0.5 degree from the closed hard stop.

ECM RELAY

The ECM relay is used to initiate the power up and power down routines within the ECM. The main relay is installed in the EJB.

When the ignition is turned on, battery voltage is applied to the ignition sense input. The ECM then starts its power up routines and energizes the ECM relay.

When the ignition is turned off, the ECM maintains its powered up state while it conducts the power down routines (up to 20 minutes in extreme cases, when cooling fans are required) and on completion will turn off the ECM relay.

CONTROL DIAGRAM

Sheet 1 of 2

NOTE:

A = Hardwired.

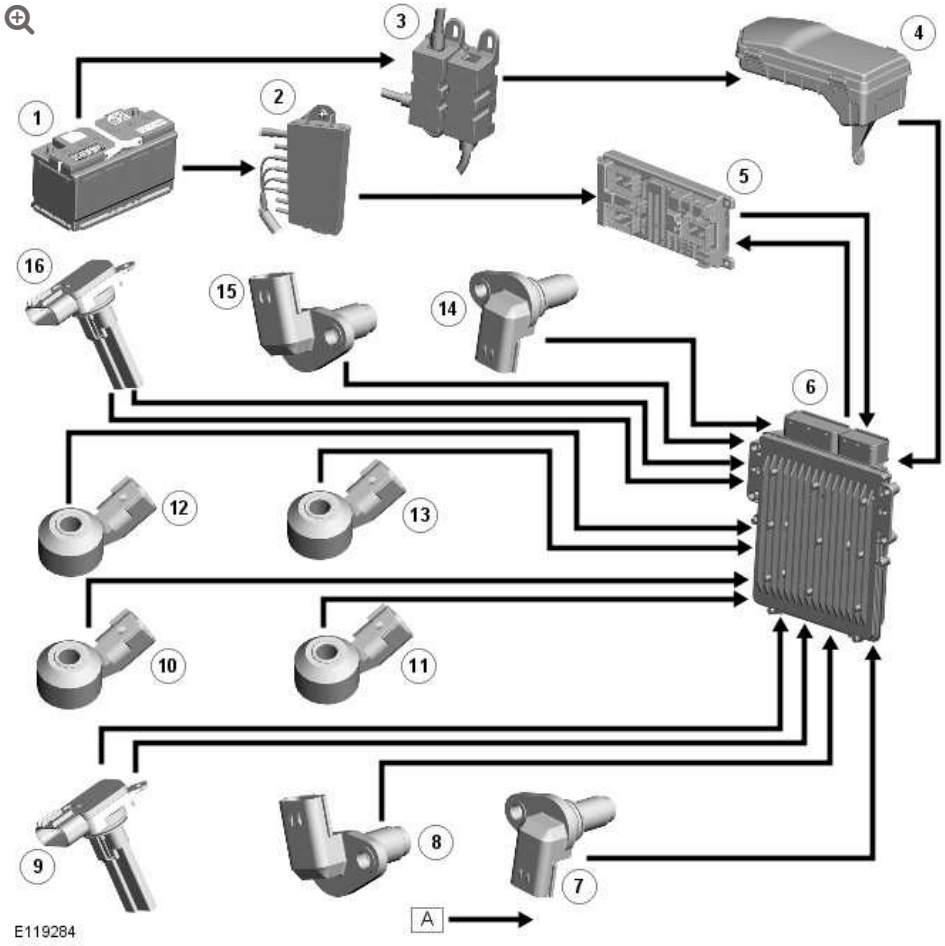

ITEM	DESCRIPTION
1	Battery
2	Pre fuse box
3	CJB (central junction box)
4	BJB (battery junction box) (250 A megafuse)
5	EJB (engine junction box)
6	ECM
7	LH (left hand) intake CMP sensor
8	LH exhaust CMP sensor

ITEM	DESCRIPTION
9	LH MAFT sensor
10	LH front knock sensor
11	LH rear knock sensor
12	RH (right hand) rear knock sensor
13	RH front knock sensor
14	RH intake CMP sensor
15	RH exhaust CMP sensor
16	RH MAFT sensor

NOTE:

A = Hardwired; D = High speed CAN bus.

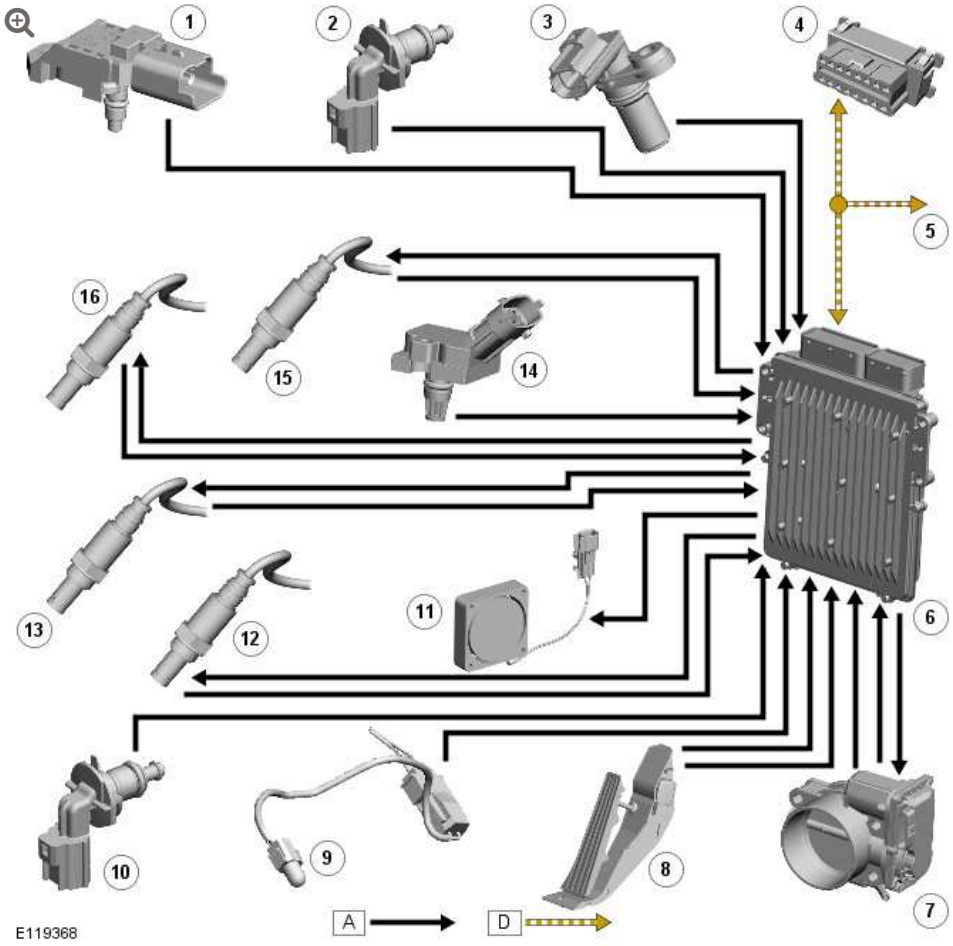

ITEM	DESCRIPTION
1	MAP sensor
2	ECT sensor (ECT 2)
3	CKP sensor
4	Diagnostic socket
5	To other system control modules
6	ECM
7	Electronic throttle
8	APP sensor
9	AAT sensor
10	ECT sensor (ECT 1)
11	ECM cooling fan
12	LH downstream HO2S

ITEM	DESCRIPTION
13	LH upstream HO2S
14	MAPT (manifold absolute pressure and temperature) sensor
15	RH downstream HO2S
16	RH upstream HO2S

OPERATION

ECM ADAPTIONS

The ECM has the ability to adapt the input values it uses to control certain outputs. This capability maintains engine refinement and ensures the engine emissions remain within the legislated limits. The components which have adaptions associated with them are:

- The APP sensor
- The heated oxygen sensors
- The MAFT sensors
- The CKP sensor
- Electronic throttle.

OXYGEN AND MAFT SENSORS

There are several adaptive maps associated with the fueling strategy. Within the fueling strategy the ECM calculates short-term adaptions and long term adaptions. The ECM will monitor the deterioration of the heated oxygen sensors over a period of time. It will also monitor the current correction associated with the sensors.

The ECM will store a fault code in circumstances where an adaption is forced to exceed its operating parameters. At the same time, the ECM will record the engine speed, engine load and intake air temperature.

CRANKSHAFT POSITION SENSOR

The characteristics of the signal supplied by the CKP sensor are learned by the ECM. This enables the ECM to set an adaption and support the engine misfire detection function. Due to the small variation between different drive plates and different CKP sensors, the adaption must be reset if either component is renewed, or removed and refitted. It is also necessary to reset the drive plate adaption if the ECM is renewed or replaced. The ECM supports four drive plate adaptions for the CKP sensor. Each adaption relates to a specific engine speed range. The engine speed ranges are detailed in the table below:

ADAPTION	ENGINE SPEED, REV/MIN
1	1800 - 3000
2	3001 - 3800
3	3801 - 4600
4	4601 - 5400

MISFIRE DETECTION

Legislation requires that the ECM must be able to detect the presence of an engine misfire. It must be able to detect misfires at two separate levels. The first level is a misfire that could lead to the legislated emissions limit being exceeded by a given amount. The second level is a misfire that may cause catalytic converter damage.

The ECM monitors the number of misfire occurrences within two engine speed ranges. If the ECM detects more than a predetermined number of misfire occurrences within either of these two ranges, over two consecutive journeys, it will record a fault code and details of the engine speed, engine load and engine coolant temperature. In addition, the ECM monitors the number of misfire occurrences that happen in a 'window' of 200 engine revolutions. The misfire occurrences are assigned a weighting according to their likely impact on the catalytic converters. If the number of misfires exceeds a given

value, the ECM stores catalytic converter damage fault codes, along with the engine speed, engine load and engine coolant temperature.

The signal from the CKP sensor indicates how fast the poles on the drive plate are passing the sensor tip. A sine wave is generated each time a pole passes the sensor tip. The ECM can detect variations in drive plate speed by monitoring the sine wave signal supplied by the crankshaft position sensor. By assessing this signal, the ECM can detect the presence of an engine misfire. At this time, the ECM will assess the amount of variation in the signal received from the CKP sensor and assign a roughness value to it. This roughness value can be viewed within the real time monitoring feature using Land Rover approved diagnostic equipment. TheECM will evaluate the signal against a number of factors and will decide whether to record the occurrence or ignore it. The ECM can assign a roughness and misfire signal for each cylinder.

DIAGNOSTICS

The ECM stores each fault as a DTC (diagnostic trouble code). The DTC and associated environmental and freeze frame data can be read using Land Rover approved diagnostic equipment, which can also read real time data from each sensor, the adaption values currently being employed and the current fueling, ignition and idle speed settings.

ELECTRONIC ENGINE CONTROLS – V8 S/C 5.0L PETROL

DIAGNOSIS AND TESTING

PRINCIPLES OF OPERATION

For a detailed description of the electronic engine control system and operation, refer to the relevant Description and Operation section of the workshop manual. REFER to: Electronic Engine Controls (303-14 Electronic Engine Controls - 5.0L, Vehicles With: Supercharger, Description and Operation).

INSPECTION AND VERIFICATION

CAUTION:

Diagnosis by substitution from a donor vehicle is **NOT** acceptable. Substitution of control modules does not guarantee confirmation of a fault and may also cause additional faults in the vehicle being checked and/or the donor vehicle.

NOTE:

Check and rectify basic faults before beginning diagnostic routines involving pinpoint tests.

1. Verify the customer concern.

2. Visually inspect for obvious signs of mechanical or electrical damage.

Visual Inspection

MECHANICAL	ELECTRICAL
▪ Engine oil level ▪ Cooling system coolant level ▪ Fuel level ▪ Fuel contamination/grade/quality ▪ Fuel leaks ▪ Accessory drive belt ▪ Sensor installation/condition ▪ Viscous fan and solenoid ▪ Air cleaner condition	▪ Fuses ▪ Wiring harness ▪ Electrical connector(s) ▪ 5 volt sensor supply ▪ Sensor(s) ▪ Engine Control Module (ECM) ▪ Transmission Control Module (TCM)

3. If an obvious cause for an observed or reported concern is found, correct the cause (if possible) before proceeding to the next step.

4. If the cause is not visually evident, verify the symptom and refer to the Symptom Chart, alternatively check for Diagnostic Trouble Codes (DTCs) and refer to the DTC Index.

SYMPTOM CHART

SYMPTOM	POSSIBLE CAUSES	ACTION
Engine cranks, but does not fire	▪ Engine breather system disconnected/restricted ▪ Ignition system ▪ Fuel system ▪ Electronic engine control	Ensure the engine breather system is free from restriction and is correctly installed. Check for ignition system, fuel system and electronic engine control DTCs and refer to the relevant DTC Index
Engine cranks and fires, but will not start	▪ Evaporative emissions purge valve ▪ Fuel pump ▪ Spark plugs ▪ HT short to ground (tracking) check rubber boots for cracks/damage ▪ Ignition system	Check for evaporative emissions, fuel system and ignition system related DTCs and refer to the relevant DTC Index
Difficult cold start	▪ Engine coolant level/anti-freeze content ▪ Battery ▪ Electronic engine controls ▪ Exhaust Gas Recirculation (EGR) valve stuck open ▪ Fuel pump ▪ Purge valve	Check the engine coolant level and condition. Ensure the battery is in a fully charged and serviceable condition. Check for electronic engine controls, engine emissions, fuel system and evaporative emissions system related DTCs and refer to the relevant DTC Index
Difficult hot start	▪ Injector leak ▪ Electronic engine control ▪ Purge valve ▪ Fuel pump ▪ Ignition system ▪ EGR valve stuck open	Check for injector leak, install new injector as required. Check for electronic engine controls, evaporative emissions, fuel system, ignition system and engine emission system related DTCs and refer to the relevant DTC Index
	▪ Injector leak	

SYMPTOM	POSSIBLE CAUSES	ACTION
Difficult to start after hot soak (vehicle standing, engine off, after engine has reached operating temperature)	▪ Electronic engine control ▪ Purge valve ▪ Fuel pump ▪ Ignition system ▪ EGR valve stuck open	Check for injector leak, install new injector as required. Check for electronic engine controls, evaporative emissions, fuel system, ignition system and engine emission system related DTCs and refer to the relevant DTC Index
Engine stalls soon after start	▪ Breather system disconnected/restricted ▪ ECM relay ▪ Electronic engine control ▪ Ignition system ▪ Air intake system restricted ▪ Air leakage ▪ Fuel lines	Ensure the engine breather system is free from restriction and is correctly installed. Check for electronic engine control, ignition system and fuel system related DTCs and refer to the relevant DTC Index. Check for blockage in air filter element and air intake system. Check for air leakage in air intake system
Engine hesitates/poor acceleration	▪ Fuel pressure, fuel pump, fuel lines ▪ Injector leak ▪ Air leakage ▪ Electronic engine control ▪ Throttle motor ▪ Restricted accelerator pedal travel (carpet, etc) ▪ Ignition system ▪ EGR valve stuck open ▪ Transmission malfunction	Check for fuel system related DTCs and refer to the relevant DTC Index. Check for injector leak, install new injector as required. Check for air leakage in air intake system. Ensure accelerator pedal is free from restriction. Check for electronic engine controls, ignition, engine emission system and transmission related DTCs and refer to the relevant DTC Index
Engine backfires	▪ Fuel pump/lines ▪ Air leakage	Check for fuel system failures. Check for air leakage in intake air system. Check for electronic engine

SYMPTOM	POSSIBLE CAUSES	ACTION
	▪ Electronic engine controls ▪ Ignition system ▪ Sticking variable camshaft timing (VCT) hub	controls, ignition system and VCT system related DTCs and refer to the relevant DTC Index
Engine surges	▪ Fuel pump/lines ▪ Electronic engine controls ▪ Throttle motor ▪ Ignition system	Check for fuel system failures. Check for electronic engine controls, throttle system and ignition system related DTCs and refer to the relevant DTC Index
Engine detonates/knocks	▪ Fuel pump/lines ▪ Air leakage ▪ Electronic engine controls ▪ Sticking VCT hub	Check for fuel system failures. Check for air leakage in intake air system. Check for electronic engine controls and VCT system related DTCs and refer to the relevant DTC Index
No throttle response	▪ Electronic engine controls ▪ Throttle motor	Check for electronic engine controls and throttle system related DTCs and refer to the relevant DTC Index
Poor throttle response	▪ Breather system disconnected/restricted ▪ Electronic engine control ▪ Transmission malfunction ▪ Traction control event ▪ Air leakage	Ensure the engine breather system is free from restriction and is correctly installed. Check for electronic engine controls, transmission and traction control related DTCs and refer to the related DTC Index. Check for air leakage in intake air system

DTC INDEX

For a list of Diagnostic Trouble Codes (DTCs) that could be logged on this vehicle, please refer to Section 100-00. REFER to: Diagnostic Trouble Code (DTC) Index - 5.0L, DTC: Module Name: Engine Control Module (100-00, Description and Operation).

ENGINE CONTROL MODULE (ECM) (G1225068)

REMOVAL AND INSTALLATION

18.30.03	ELECTRONIC CONTROL UNIT – FUEL – RENEW	5000 CC, AJ V8	0.2	USED WITHINS	+

REMOVAL

CAUTION:

Before the disconnection or removal of any components, make sure the area around joint faces and connections are clean. Plug any open connections to prevent contamination.

NOTE:

Removal steps in this procedure may contain installation details.

1. Disconnect the battery ground cable.

Refer to: Specifications (414-00 Charging System - General Information, Specifications).

2.

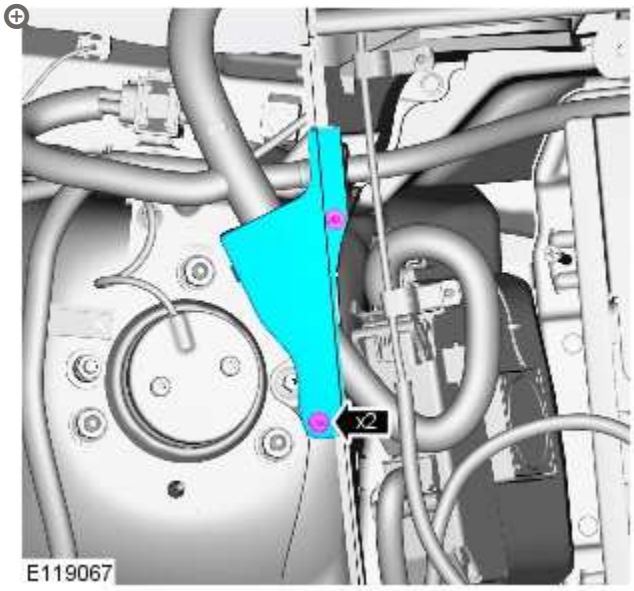

3.

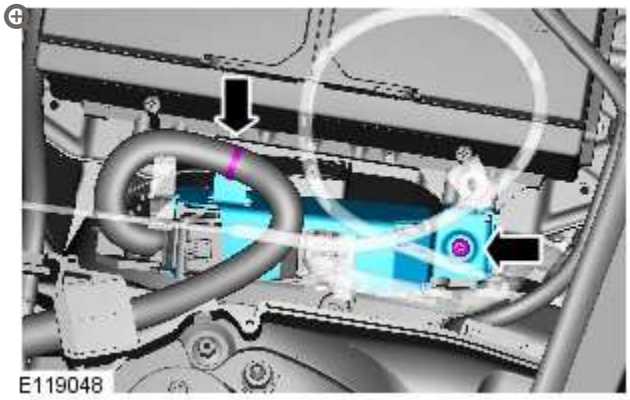

- *Torque:* **9 Nm**

4.

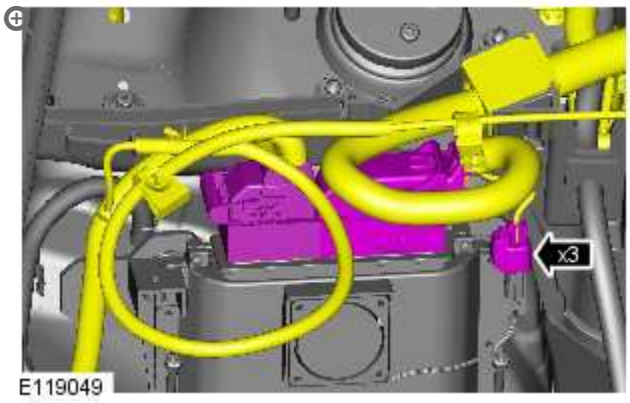

5.

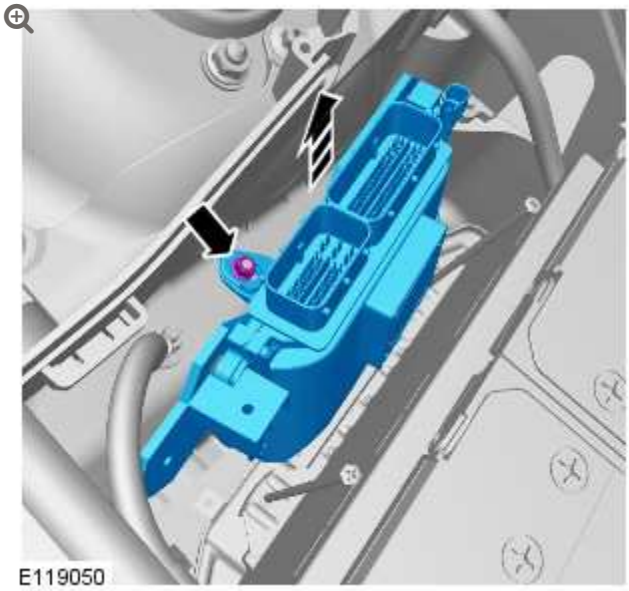

- *Torque:* **9 Nm**

6.

NOTE:

Do not disassemble further if the component is removed for access only.



E119052

INSTALLATION

1. To install, reverse the removal procedure.

ELECTRONIC ENGINE CONTROLS – V8 S/C 5.0L PETROL

ENGINE COOLANT TEMPERATURE (ECT) SENSOR (G1225172)

REMOVAL AND INSTALLATION

18.30.10	SENSOR – COOLANT TEMPERATURE (ECT SENSOR) – RENEW	5000 CC, AJ V8, SUPERCHARGED	1	USED WITHINS	+

REMOVAL

NOTE:

Removal steps in this procedure may contain installation details.

1. **WARNING:**

   Do not work on or under a vehicle supported only by a jack. Always support the vehicle on safety stands.

   Raise and support the vehicle.

2. Disconnect the battery ground cable.
   Refer to: Specifications (414-00 Battery and Charging System - General Information, Specifications).

3. Refer to: Engine Cover - V8 5.0L Petrol/V8 S/C 5.0L Petrol (501-05 Interior Trim and Ornamentation, Removal and Installation).

4. Refer to: Cooling System Partial Draining and Vacuum Filling (303-03B, General Procedures).

5. Refer to: Plenum Chamber (412-01A Air Distribution and Filtering, Removal and Installation).

6. **NOTE:**

   Some variation in the illustrations may occur, but the essential information is always correct.

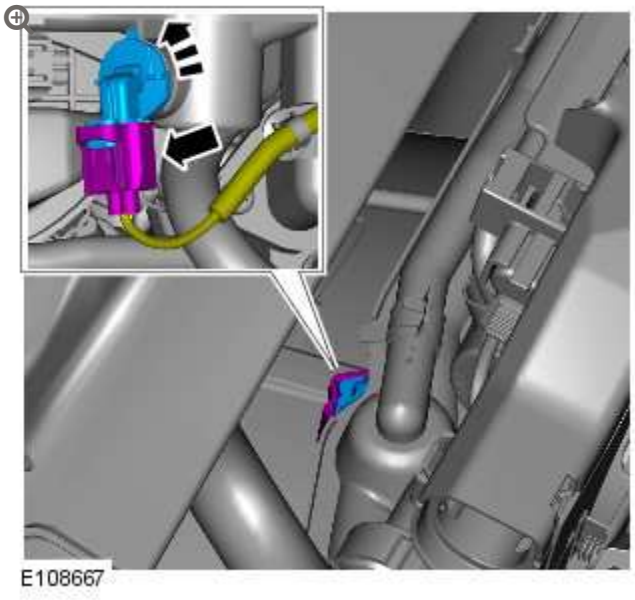

INSTALLATION

1. To install, reverse the removal procedure.

ELECTRONIC ENGINE CONTROLS – V8 S/C 5.0L PETROL

ENGINE OIL LEVEL SENSOR (G1085874)

REMOVAL AND INSTALLATION

12.60.51	SWITCH – OIL LEVEL INDICATOR – RENEW	5000 CC, AJ V8	4.8	USED WITHINS	+

REMOVAL

NOTE:

Removal steps in this procedure may contain installation details.

1. **WARNING:**

   Do not work on or under a vehicle supported only by a jack. Always support the vehicle on safety stands.

   Raise and support the vehicle.

2. Refer to: Air Deflector (501-02, Removal and Installation).

3. Refer to: Engine Oil Draining and Filling (303-01F, General Procedures).

4. **CAUTION:**

> Be prepared to collect escaping fluids.

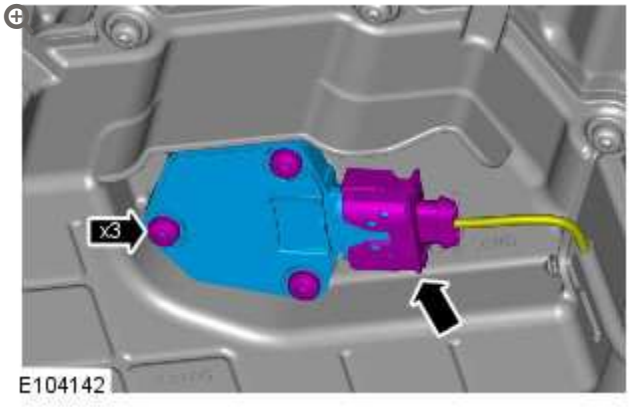

Torque: **11 Nm**

INSTALLATION

1. **CAUTION:**

> A new O-ring seal is to be installed.

To install, reverse the removal procedure.

ELECTRONIC ENGINE CONTROLS – V8 S/C 5.0L PETROL

FRONT KNOCK SENSOR (KS) LH (G1224248)

REMOVAL AND INSTALLATION

18.30.81	SENSOR – KNOCK (KS) – LH FRONT – RENEW	5000 CC, AJ V8, SUPERCHARGED	3.2	USED WITHINS	+

REMOVAL

NOTE:

Removal steps in this procedure may contain installation details.

1. Disconnect the battery ground cable.
   Refer to: Specifications (414-00, Specifications).

2.

WARNING:

Make sure to support the vehicle with axle stands.

Raise and support the vehicle.

3. Refer to: Supercharger (303-12, Removal and Installation).

4. 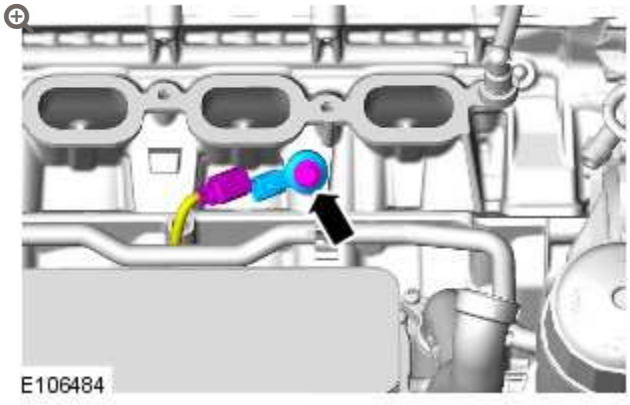

Torque: **20 Nm**

INSTALLATION

1. To install, reverse the removal procedure.

ELECTRONIC ENGINE CONTROLS – V8 S/C 5.0L PETROL

FRONT KNOCK SENSOR (KS) RH (G1224249)

REMOVAL AND INSTALLATION

18.30.84	SENSOR – KNOCK (KS) – RH FRONT – RENEW	5000 CC, AJ V8, SUPERCHARGED	3.3	USED WITHINS	+

REMOVAL

NOTE:

Removal steps in this procedure may contain installation details.

1. Disconnect the battery ground cable.
   Refer to: Specifications (414-00, Specifications).

2.

WARNING:

Make sure to support the vehicle with axle stands.

Raise and support the vehicle.

3. Refer to: Supercharger (303-12, Removal and Installation).

4. 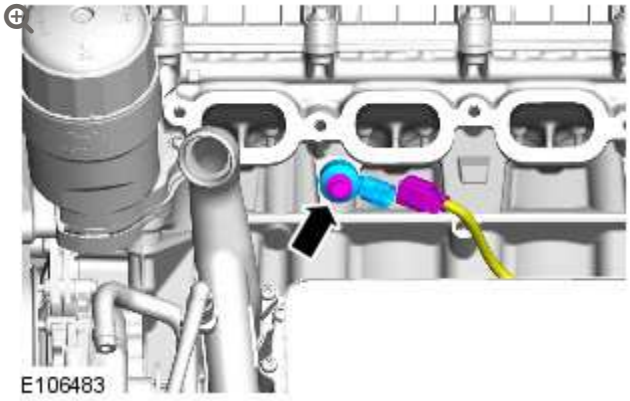

Torque: **20 Nm**

INSTALLATION

1. To install, reverse the removal procedure.

ELECTRONIC ENGINE CONTROLS – V8 S/C 5.0L PETROL

FUEL RAIL PRESSURE (FRP) SENSOR (G1224149)

REMOVAL AND INSTALLATION

19.22.33	SENSOR – FUEL PRESSURE – RENEW	5000 CC, AJ V8, SUPERCHARGED	1.1	USED WITHINS	+

REMOVAL

NOTE:

Removal steps in this procedure may contain installation details.

1. Refer to: Fuel System Pressure Release - V8 5.0L Petrol/V8 S/C 5.0L Petrol (310-00 Fuel System - General Information, General Procedures).
2. Refer to: Fuel Injection Component Cleaning (303-04A Fuel Charging and Controls - V8 5.0L Petrol, General Procedures).
3. Disconnect the battery ground cable.

Refer to: Specifications (414-00 Battery and Charging System - General Information, Specifications).

4. **WARNING:**

> Make sure to support the vehicle with axle stands.

Raise and support the vehicle.

5. Refer to: Cooling System Partial Draining and Vacuum Filling (303-03B, General Procedures).

6. Refer to: Plenum Chamber (412-01A Air Distribution and Filtering, Removal and Installation).

7. **CAUTION:**

> Be prepared to collect escaping fluids.

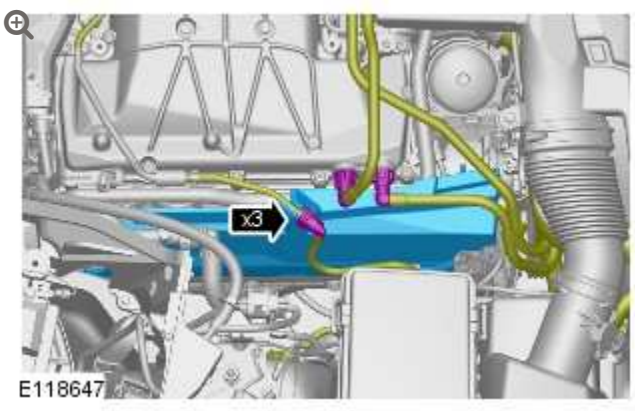

8.

CAUTIONS:

- Be prepared to collect escaping fluids.
- Make sure that all openings are sealed. Use new blanking caps.



- *Torque:* **32 Nm**

INSTALLATION

1. To install, reverse the removal procedure.

ELECTRONIC ENGINE CONTROLS – V8 S/C 5.0L PETROL

HEATED OXYGEN SENSOR (H02S) LH (G1225150)

REMOVAL AND INSTALLATION

SPECIAL TOOL(S)



310–121

Wrench, H02S

REMOVAL

NOTE:

Removal steps in this procedure may contain installation details.

1. Disconnect the battery ground cable.
   Refer to: Specifications (414-00 Charging System - General Information, Specifications).

2. **WARNING:**

   Make sure to support the vehicle with axle stands.

   Raise and support the vehicle.

3. Refer to: Exhaust System (309-00 Exhaust System - 5.0L NA V8 - AJ133/5.0L SC V8 - AJ133, Removal and Installation).

4. 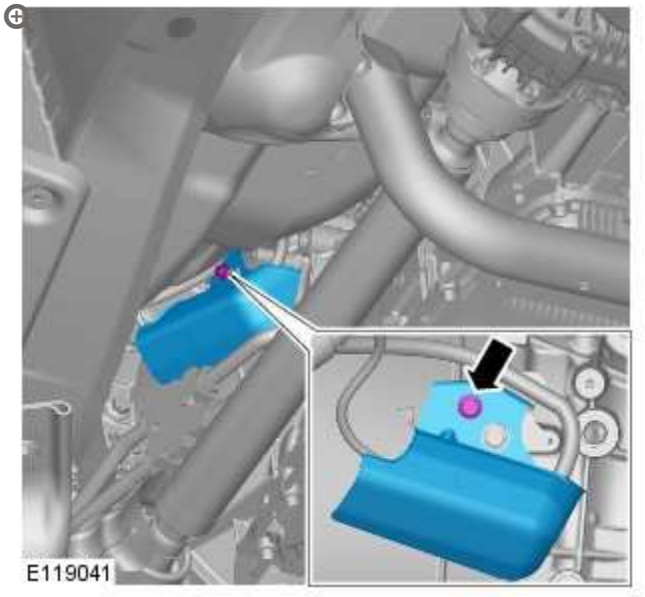

   Torque: **11 Nm**

5.

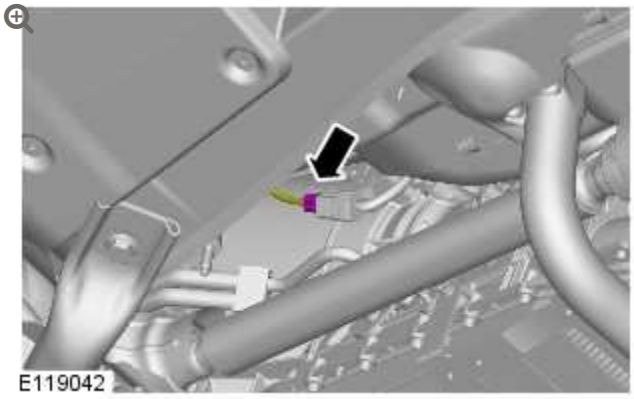

6.

CAUTION:

Make sure that the mating faces are clean and free of foreign material.

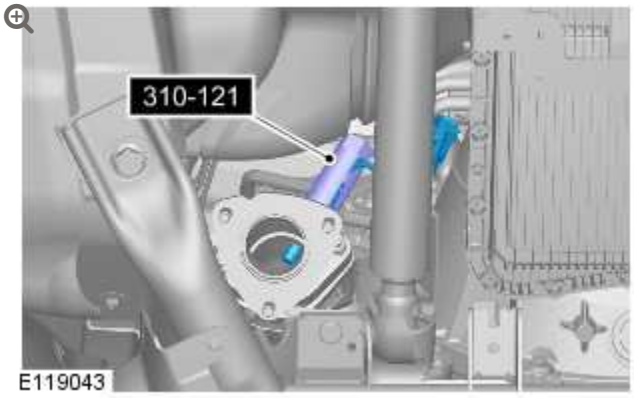

Special Tool(s): 310-121

Torque: **48 Nm**

INSTALLATION

1.

CAUTIONS:

- Make sure the anti-seize compound does not contact the HO2S tip.
- If accidentally dropped or knocked install a new sensor.
- Make sure the HO2S wiring harness is not twisted more than 180 degrees and is not in contact with either the exhaust or driveshaft.

NOTE:

If the original sensor is to be installed, apply lubricant meeting specification ESE-M12A4-A to the thread of the sensor.

To install, reverse the removal procedure.

2. Using the approved diagnostic equipment, clear the powertrain control module (PCM) adaptions.

HEATED OXYGEN SENSOR (HO2S) RH (G1225151)

REMOVAL AND INSTALLATION

SPECIAL TOOL(S)



310–121

Wrench, H02S

REMOVAL

NOTE:

Removal steps in this procedure may contain installation details.

1. Disconnect the battery ground cable.
   Refer to: Specifications (414-00, Specifications).

2. **WARNING:**

   Make sure to support the vehicle with axle stands.

   Raise and support the vehicle.

3. Refer to: Exhaust System (309-00, Removal and Installation).

4. 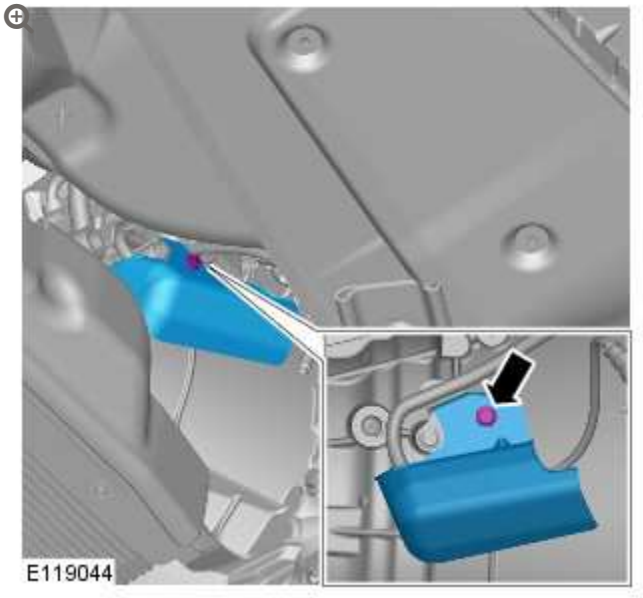

   Torque: **11 Nm**

5.

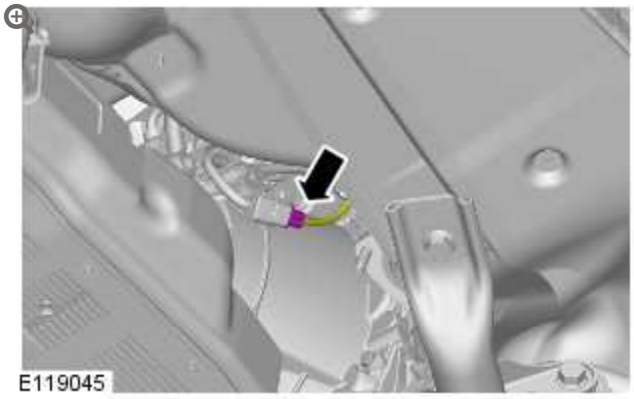

6.

CAUTION:

Make sure that the mating faces are clean and free of foreign material.

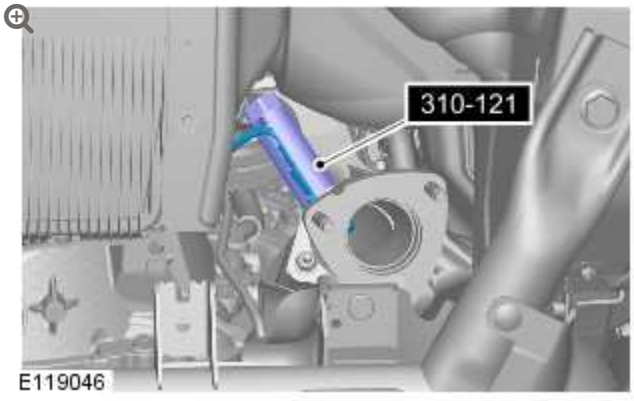

Special Tool(s): 310-121

Torque: **48 Nm**

INSTALLATION

1.

CAUTIONS:

- Make sure the anti-seize compound does not contact the HO2S tip.
- If accidentally dropped or knocked install a new sensor.
- Make sure the HO2S wiring harness is not twisted more than 180 degrees and is not in contact with either the exhaust or driveshaft.

NOTE:

If the original sensor is to be installed, apply lubricant meeting specification ESE-M12A4-A to the thread of the sensor.

To install, reverse the removal procedure.

ELECTRONIC ENGINE CONTROLS – V8 S/C 5.0L PETROL

MANIFOLD ABSOLUTE PRESSURE (MAP) SENSOR (G1224060)

REMOVAL AND INSTALLATION

18.30.56	SENSOR – MANIFOLD AIR PRESSURE – RENEW	5000 CC, AJ V8, SUPERCHARGED	0.5	USED WITHINS	+

REMOVAL

NOTE:

Removal steps in this procedure may contain installation details.

1. Disconnect the battery ground cable.
   Refer to: Specifications (414-00, Specifications).
2. Refer to: Engine Cover - 5.0L (501-05, Removal and Installation).
3.

Refer to: Plenum Chamber (412-01, Removal and Installation).

4.

NOTE:

Some variation in the illustrations may occur, but the essential information is always correct.

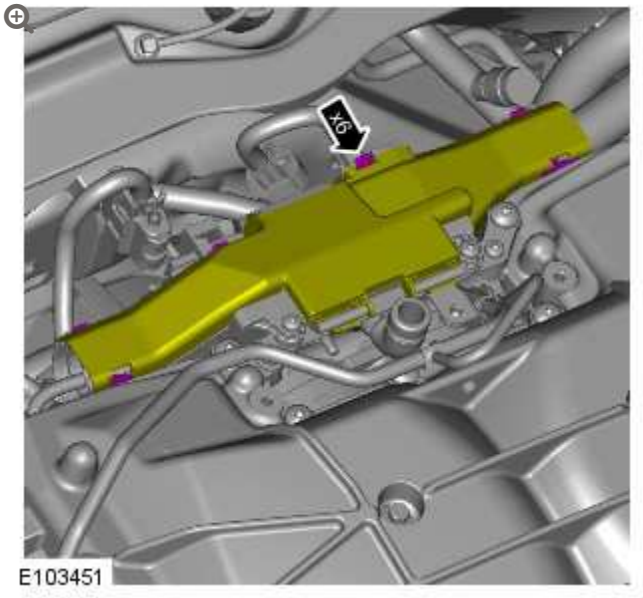

5.

NOTE:

Some variation in the illustrations may occur, but the essential information is always correct.

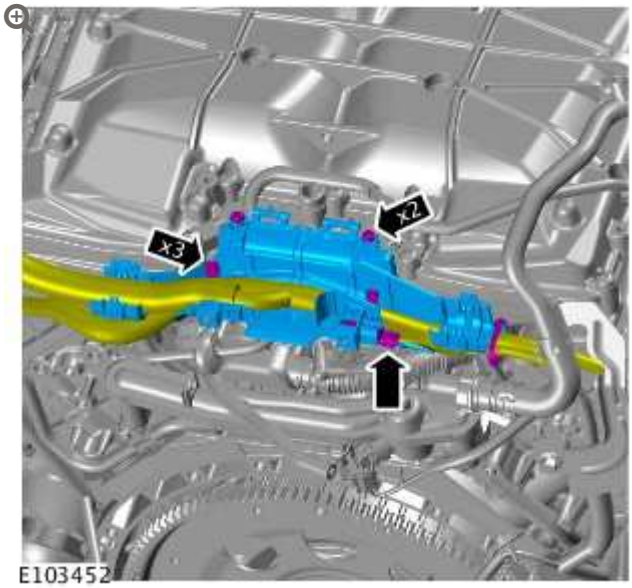

- *Torque:* **10 Nm**

6.

NOTE:

Some variation in the illustrations may occur, but the essential information is always correct.

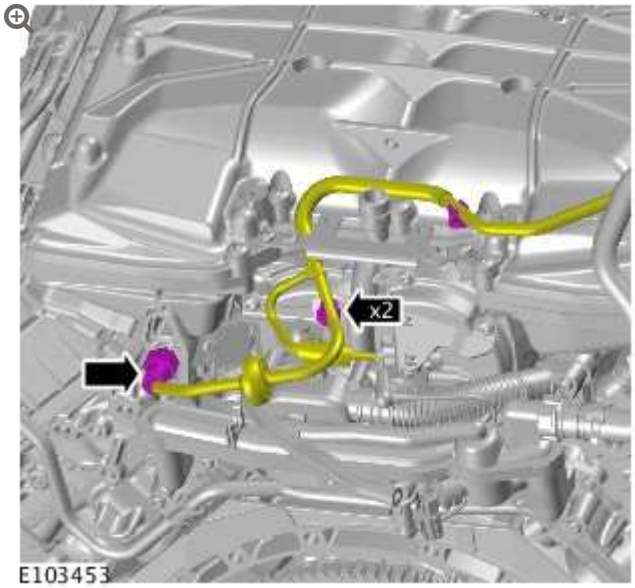

7.

NOTE:

Some variation in the illustrations may occur, but the essential information is always correct.

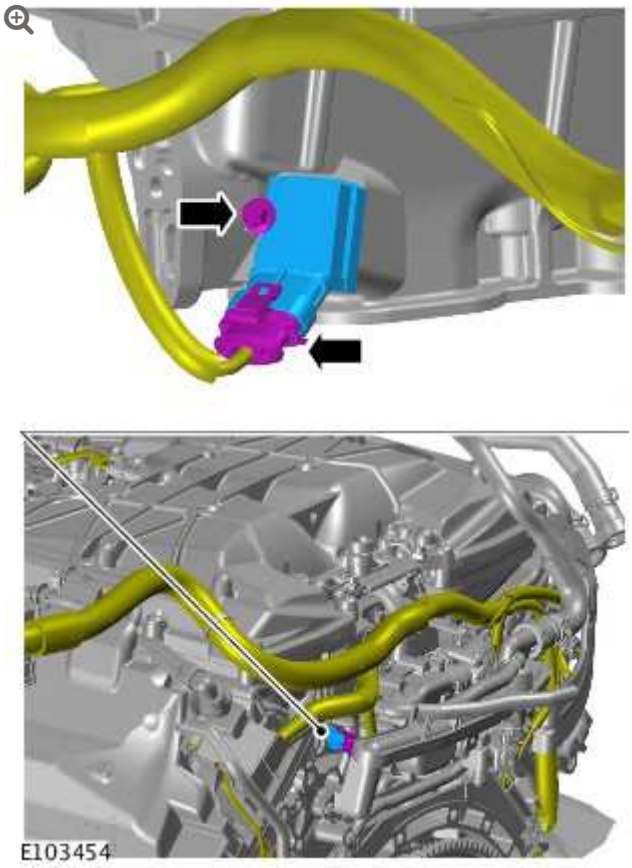

- *Torque:* **5 Nm**

INSTALLATION

1. To install, reverse the removal procedure.

ELECTRONIC ENGINE CONTROLS – V8 S/C 5.0L PETROL

SPECIFICATIONS

Torque Specifications

DESCRIPTION	NM	LB-FT	LB-IN
Camshaft position (CMP) sensor(s) retaining bolt	10	7	-
Crankshaft position (CKP) sensor retaining bolt	10	7	-
Heated oxygen sensor(s) (HO2S)	48	35	-
Catalyst monitor sensor(s)	48	35	-
Knock sensor(s) (KS) retaining bolt	20	15	-
Fuel rail pressure (FRP) sensor	32	24	-
Manifold absolute pressure and temperature (MAPT) sensor	5	-	44
Engine oil level sensor retaining bolts	12	8	-
Variable valve timing (VVT) oil control solenoid(s) retaining bolts	10	7	-
Engine control module (ECM) cover retaining bolt	9	-	80
ECM bracket retaining nut	9	-	80

ELECTRONIC ENGINE CONTROLS – V8 S/C 5.0L PETROL

MASS AIR FLOW (MAF) SENSOR (G1224112)

REMOVAL AND INSTALLATION

19.22.25	SENSOR - MASS AIR FLOW (MAFS) - RENEW	5000 CC, AJ V8	0.1	USED WITHINS	+
19.22.25	SENSOR - MASS AIR FLOW (MAFS) - RENEW	AJ V8, SUPERCHARGED	0.1	USED WITHINS	+

REMOVAL

NOTE:

Removal steps in this procedure may contain installation details.

1. Disconnect the battery ground cable.
   Refer to: Specifications (414-00, Specifications).

2. **NOTES:**

- Right-hand shown, left-hand similar.
- Some variation in the illustrations may occur, but the essential information is always correct.

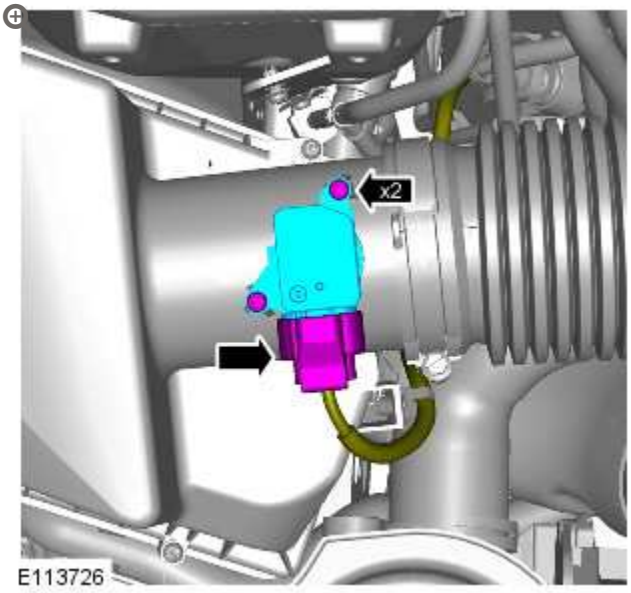

Torque: **2 Nm**

INSTALLATION

1. To install reverse the removal procedure.

2. Using the approved diagnostic equipment, clear the powertrain control module (PCM) adaptions.

ELECTRONIC ENGINE CONTROLS – V8 S/C 5.0L PETROL

POWERTRAIN CONTROL MODULE (PCM) LONG DRIVE CYCLE SELF-TEST

(G1225997)

GENERAL PROCEDURES

WARNING:

Where possible, all road tests should be on well surfaced and dry roads. Always comply with speed limits and local traffic regulations.

NOTES:

- This procedure is an overcheck only. If fault codes are found, interrogation of the relevant system must be carried out and claimed against.
- The vehicle must exceed 50mph (80 km/h) during the road test.

1. Connect the diagnostic equipment to the vehicle.

2. Follow on screen prompts and check for engine management fault codes.

3. Clear the fault codes following the on screen procedure.

4. Disconnect the diagnostic equipment from the vehicle.

5. **NOTE:**

   Make sure cruise control is not engaged.

   Make sure the engine temperature is above 60 °C (140 °F).

   Carry out a road test and perform the following operations.

   1. Accelerate to 55 mph (88 km/h) in 5th gear and cruise for 2 minutes with the engine speed at or above 1800rpm.
   2. Lift off the throttle and allow the vehicle to decelerate until the engine speed is less than 1000 rpm.
   3. Stop the vehicle.
   4. Release brake, allow the vehicle to move with no throttle for 1 minute.
   5. Road test is now complete.

6. Connect the diagnostic equipment to the vehicle.

7. **NOTE:**

   If fault codes are found, interrogation of the relevant system must be carried out and claimed against.

Follow on screen prompts and check for engine management fault codes.

8. Disconnect the diagnostic equipment from the vehicle.

POWERTRAIN CONTROL MODULE (PCM) SHORT DRIVE CYCLE SELF-TEST

(G1225998)

GENERAL PROCEDURES

NOTE:

This procedure is an overcheck only. If fault codes are found, interrogation of the relevant system must be carried out and claimed against.

1. Connect the diagnostic equipment to the vehicle.
2. Follow on screen prompts and check for engine management fault codes.
3. Clear the fault codes following the on screen procedure.
4. Start the engine.
   - Allow the engine to idle for 30 seconds.
   -

Raise the engine speed to 1500 rpm and hold for 3 minutes until a temperature of 70°C (158 °F) is achieved.

- Allow the engine to idle for 30 seconds.
- Switch off the engine.

5. **NOTE:**

   If fault codes are found, interrogation of the relevant system must be carried out and claimed against.

   Follow on screen prompts and check for engine management fault codes.

6. Disconnect the diagnostic equipment from the vehicle.

REAR KNOCK SENSOR (KS) RH (G1224251)

REMOVAL AND INSTALLATION

18.30.85	SENSOR – KNOCK (KS) – RH REAR – RENEW	5000 CC, AJ V8, SUPERCHARGED	3.3	USED WITHINS	+

REMOVAL

NOTE:

Removal steps in this procedure may contain installation details.

1. Disconnect the battery ground cable.
   Refer to: Specifications (414-00, Specifications).

2. **WARNING:**

   Make sure to support the vehicle with axle stands.

Raise and support the vehicle.

3. Refer to: Supercharger (303-12, Removal and Installation).

4. 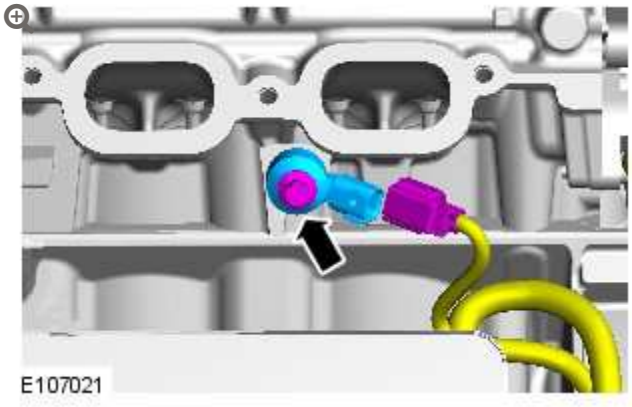

Torque: **20 Nm**

INSTALLATION

1. To install, reverse the removal procedure.

ELECTRONIC ENGINE CONTROLS – V8 S/C 5.0L PETROL

VARIABLE VALVE TIMING (VVT) OIL CONTROL SOLENOID LH (G1220958)

REMOVAL AND INSTALLATION

18.31.35	VARIABLE INTAKE VALVE TIMING SOLENOID - B BANK - RENEW	5000 CC, AJ V8, SUPERCHARGED	1.2	USED WITHINS	+

REMOVAL

NOTE:

Removal steps in this procedure may contain installation details.

1. Disconnect the battery ground cable.
   Refer to: Specifications (414-00 Battery and Charging System - General Information, Specifications).

2.

WARNING:

Make sure to support the vehicle with axle stands.

Raise and support the vehicle.

3. Refer to: Thermostat Housing - V8 S/C 5.0L Petrol (303-03A Engine Cooling - V8 5.0L Petrol/V8 S/C 5.0L Petrol, Removal and Installation).

4. **NOTE:**

Some variation in the illustrations may occur, but the essential information is always correct.

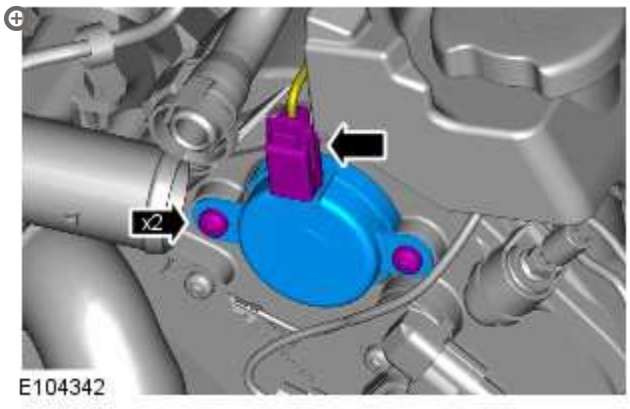

Torque: **10 Nm**

5. **CAUTION:**

Evenly and progressively, remove the VVT units from each side.

NOTE:

Some variation in the illustrations may occur, but the essential information is always correct.

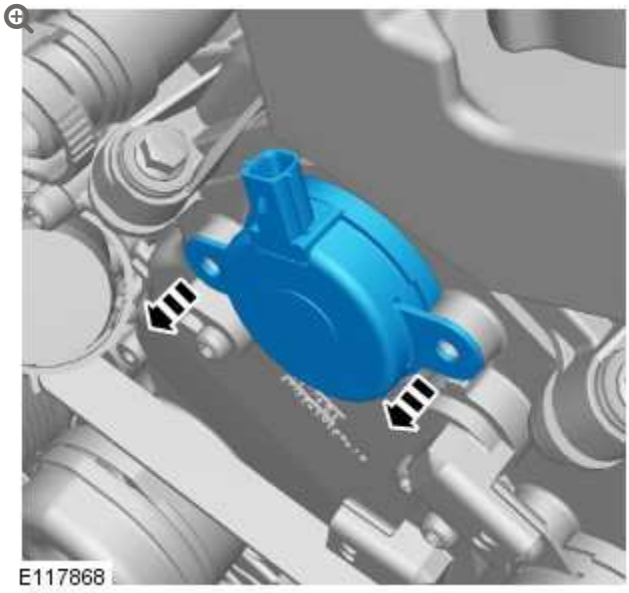

INSTALLATION

1.

CAUTION:

Make sure that the mating faces are clean and free of foreign material.

NOTE:

Lubricate the O-ring seal with clean engine oil.

To install, reverse the removal procedure.

2.

NOTE:

For NAS vehicles only.

If required, carry out a short drive cycle.

Refer to: Powertrain Control Module (PCM) Short Drive Cycle Self-Test (303-14B Electronic Engine Controls - V8 S/C 5.0L Petrol, General Procedures).

VARIABLE VALVE TIMING (VVT) OIL CONTROL SOLENOID RH (G1220959)

REMOVAL AND INSTALLATION

18.31.36	VARIABLE EXHAUST VALVE TIMING SOLENOID - B BANK - RENEW	5000 CC, AJ V8, SUPERCHARGED	1.3	USED WITHINS	+

REMOVAL

NOTE:

Removal steps in this procedure may contain installation details.

1. Disconnect the battery ground cable.
   Refer to: Specifications (414-00 Battery and Charging System - General Information, Specifications).

2.

WARNING:

Make sure to support the vehicle with axle stands.

Raise and support the vehicle.

3. Refer to: Thermostat Housing - V8 S/C 5.0L Petrol (303-03A Engine Cooling - V8 5.0L Petrol/V8 S/C 5.0L Petrol, Removal and Installation).

4. **NOTE:**

Some variation in the illustrations may occur, but the essential information is always correct.

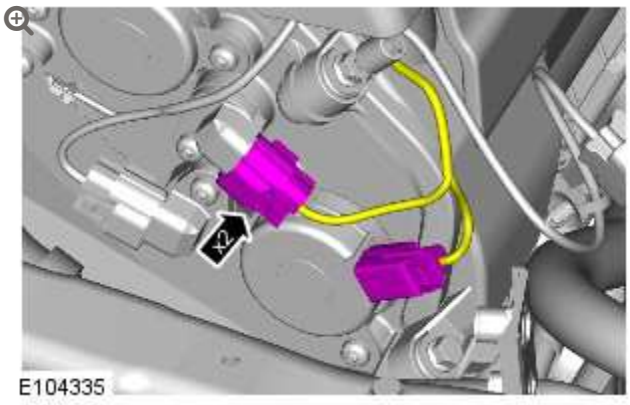

5. **NOTE:**

Some variation in the illustrations may occur, but the essential information is always correct.

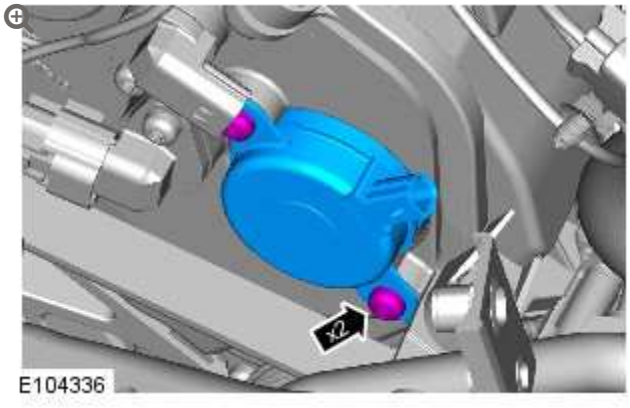

Torque: **10 Nm**

6.

CAUTION:

Evenly and progressively, remove the VVT units from each side.

NOTE:

Some variation in the illustrations may occur, but the essential information is always correct.

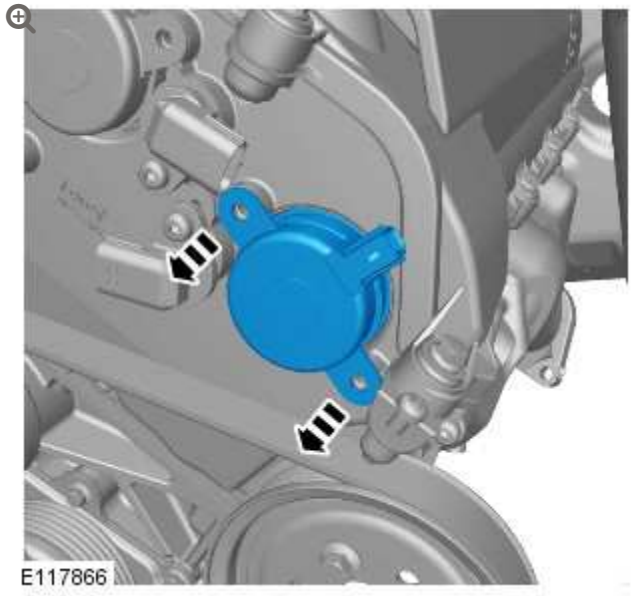

INSTALLATION

1. **CAUTION:**

   Make sure that the mating faces are clean and free of foreign material.

   NOTE:

   Lubricate the O-ring seal with clean engine oil.

   To install, reverse the removal procedure.

2. **NOTE:**

   For NAS vehicles only.

   If required, carry out a short drive cycle.

Refer to: Powertrain Control Module (PCM) Short Drive Cycle Self-Test (303-14B Electronic Engine Controls - V8 S/C 5.0L Petrol, General Procedures).

AUTOMATIC TRANSMISSION/TRANSAXLE – V8 5.0L PETROL/V8 S/C 5.0L PETROL

SPECIFICATIONS

Maintenance

CAUTION:

Use only Shell M1375.4 Automatic transmission fluid. Use of any other fluids may result in a transmission malfunction or failure.

DESCRIPTION	INTERVALS
Normal maintenance	Filled for life.
Severe duty maintenance	Change the fluid at 48,000 km (30,000 miles) intervals.

Capacities

	LITERS
Transmission	9.9

Lubricants, Fluids, Sealers and Adhesives

DESCRIPTION	SPECIFICATION
Transmission fluid	Shell M1375.4
Sealant	WSS-M4G323-A6
Metal surface cleaner	WSW-M5B392-A
High temperature grease	Molecote FB180

Torque Specifications

NOTE:

A = refer to the procedure for correct torque sequence

DESCRIPTION	NM	LB-FT	LB-IN
Transmission retaining bolts	48	35	-
Transmission mount retaining bolts	60	44	-
Transmission fluid fill plug	A	A	A
Transmission control module (TCM) and main control valve body retaining bolts	8	-	53
Torque converter retaining bolts	62	46	-
Transmission fluid cooler tube retaining bolt	22	16	-
Transmission fluid drain plug	8	-	53
Transmission fluid pan, gasket and filter retaining bolts	8	-	53

AUTOMATIC TRANSMISSION/TRANSAXLE – V8 5.0L PETROL/V8 S/C 5.0L PETROL

DIAGNOSIS AND TESTING

PRINCIPLE OF OPERATION

For a detailed description of the automatic transmission/transaxle system and operation, refer to the relevant Description and Operation sections in the workshop manual. REFER to:

Transmission Description (307-01A, Description and Operation), Transmission Description (307-01 Automatic Transmission/Transaxle - V8 5.0L Petrol/V8 S/C 5.0L Petrol, Description and Operation).

FLUID LEVEL AND CONDITION CHECK

CAUTION:

The vehicle should not be driven if the fluid level is low as internal failure can result.

NOTE:

The transmission fluid temperature must not be allowed to exceed 50°C (122°F) whilst checking level. Should the temperature rise above this figure, abort the check and allow the transmission fluid to cool to below 30°C (86°F).

This vehicle is not equipped with a fluid level indicator. An incorrect level may affect the transmission operation and could result in transmission damage. To correctly check and add fluid to the transmission. Refer to the relevant section in the workshop manual.

HIGH FLUID LEVEL

A fluid level that is too high may cause the fluid to become aerated due to the churning action of the rotating internal parts. This will cause erratic control pressure, foaming, loss of fluid from the vent tube and possible transmission damage. If an overfill condition is identified, with the engine at idle ensure the fluid temperature is within the specified range and allow the excess fluid to drain until a small thread of fluid runs from the filler/level plug hole.

LOW FLUID LEVEL

A low fluid level could result in poor transmission engagement, slipping, or damage. This could also indicate a leak in one of the transmission seals or gaskets.

ADDING FLUID

CAUTION:

The use of any other type of transmission fluid other than that specified can result in transmission damage.

If fluid needs to be added, add fluid in 0.50 liter increments through the fill hole opening. Do not overfill the fluid. For fluid type, refer to the Specification section in the workshop manual.

FLUID CONDITION CHECK

1. Check the fluid level.
2. Observe the color and the odor of the fluid. The color under normal circumstances should be like honey, not dark brown or black.
3. Allow the fluid to drip onto a facial tissue and examine the stain.
4. If evidence of solid material is found, the transmission fluid pan should be removed for further inspection.

NOTE: In the event of a transmission unit replacement for internal failure, the oil cooler and pipes must also be replaced.

INSPECTION AND VERIFICATION

CAUTION:

Diagnosis by substitution from a donor vehicle is **NOT** acceptable. Substitution of control modules does not guarantee confirmation of a fault, and may also cause additional faults in the vehicle being tested and/or the donor vehicle.

1. Verify the customer concern.
2. Visually inspect for obvious signs of damage and system integrity.

Visual Inspection

MECHANICAL	ELECTRICAL	HYDRAULIC
▪ Damaged/stuck shift mechanism ▪ Damaged automatic transmission casing	▪ Blown fuse(s) ▪ Damaged, loose or corroded connectors ▪ Wiring harness	▪ Fluid level too high/low ▪ Poor condition of fluid ▪ Fluid leak

3. If an obvious cause for an observed or reported concern is found, correct the cause (if possible) before proceeding to the next step.

4. If the cause is not visually evident check for Diagnostic Trouble Codes (DTCs) and refer to the DTC Index.

DTC INDEX

For a list of Diagnostic Trouble Codes (DTCs) that could be logged on this vehicle, please refer to Section 100-00. REFER to: Diagnostic Trouble Code (DTC) Index - DTC: Module Name: Transmission Control Module - Bosch (100-00 General Information, Description and Operation).

AUTOMATIC TRANSMISSION/TRANSAXLE - V8 5.0L PETROL/V8 S/C 5.0L PETROL

EXTENSION HOUSING SEAL (G1225987)

REMOVAL AND INSTALLATION

44.20.21	OIL SEAL - OUTPUT SHAFT - RENEW	5000 CC, AJ V8	2.3	USED WITHINS	+

SPECIAL TOOL(S)



100-012

Slide Hammer



100-012-01

Slide Hammer Adapter



307-520

Installer, Output Shaft Seal



308-375

Remover, Input and Output Seal

REMOVAL

1. Disconnect the battery ground cable.

   Refer to: Specifications (414-00, Specifications).

2. **WARNING:**

> Make sure to support the vehicle with axle stands.

Raise and support the vehicle.

3. Remove the transfer case.
Refer to: Transfer Case - 5.0L NA V8 - AJ133/5.0L SC V8 - AJ133 (308-07, Removal).

4. **CAUTION:**

> Care must be taken to avoid damage to the seal register and running surface.

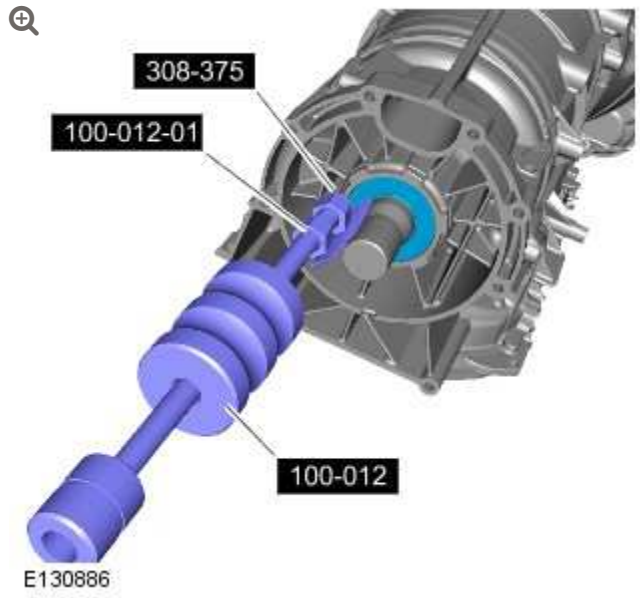

Special Tool(s): 100-012, 100-012-01, 308-375

INSTALLATION

1.

CAUTIONS:

- Oil seals must be fitted dry.
- Make sure that the mating faces are clean and free of foreign material.

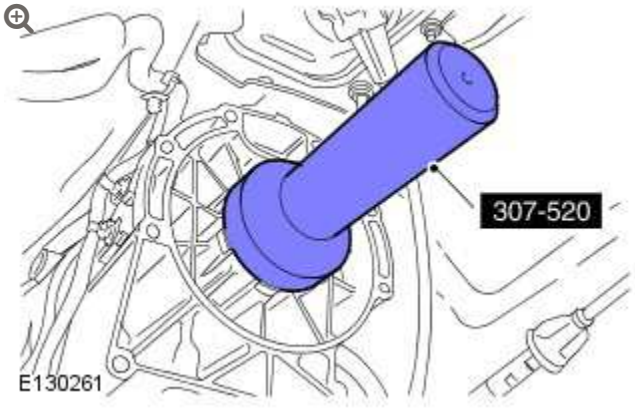

Special Tool(s): 307-520

2. Install the transfer case.
   Refer to: Transfer Case - 5.0L NA V8 - AJ133/5.0L SC V8 - AJ133 (308-07B, Installation).

3. Connect the battery ground cable.
   Refer to: Specifications (414-00, Specifications).

4. Carry out a transmission fluid level check.
   Refer to: Transmission Fluid Level Check (307-01B, General Procedures).

AUTOMATIC TRANSMISSION/TRANSAXLE - V8 5.0L PETROL/V8 S/C 5.0L PETROL

INPUT SHAFT SEAL (G1225986)

REMOVAL AND INSTALLATION

SPECIAL TOOL(S)



100-012

Slide Hammer



100-012-01

Slide Hammer Adapter



307-613

Holding Pins, Torque Converter



308-246

Installer, Front Seal

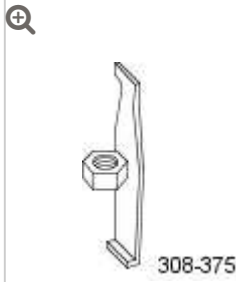

308-375

Remover, Input and Output Seal

REMOVAL

NOTE:

Removal steps in this procedure may contain installation details.

1. Disconnect the battery ground cable.
   Refer to: Specifications (414-00, Specifications).

2. **WARNING:**

   Make sure to support the vehicle with axle stands.

   Raise and support the vehicle.

3. Refer to: Transmission - 5.0L NA V8 - AJ133/5.0L SC V8 - AJ133 (307-01, Removal).

4. 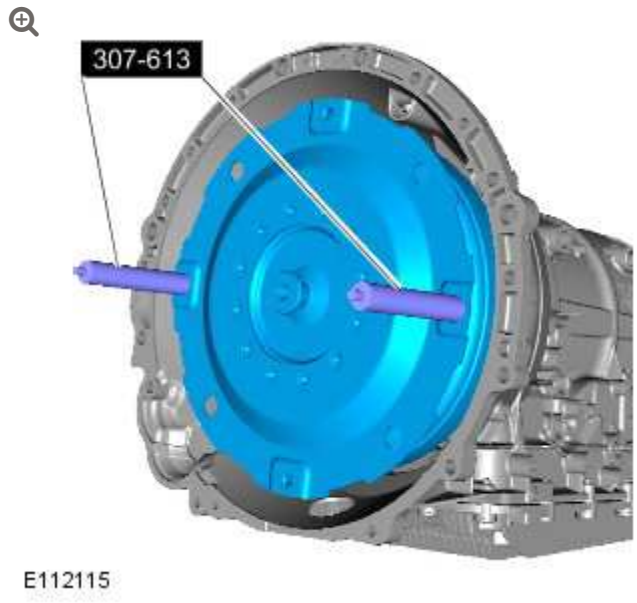

   Special Tool(s): 307-613

5.

CAUTIONS:

- Discard the seal.
- Care must be taken to avoid damage to the seal register and running surface.

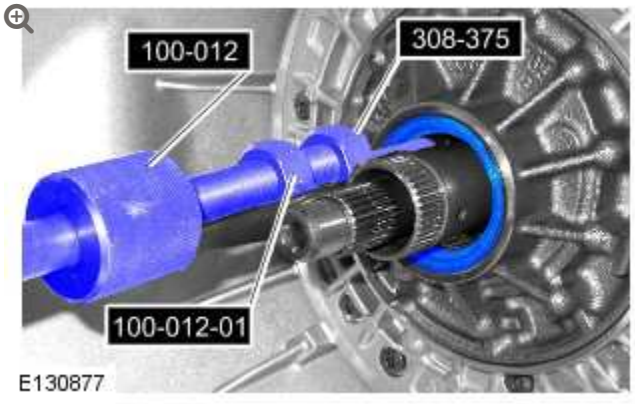

Special Tool(s): 100-012, 100-012-01, 308-375

INSTALLATION

1.

CAUTION:

Install a new seal.

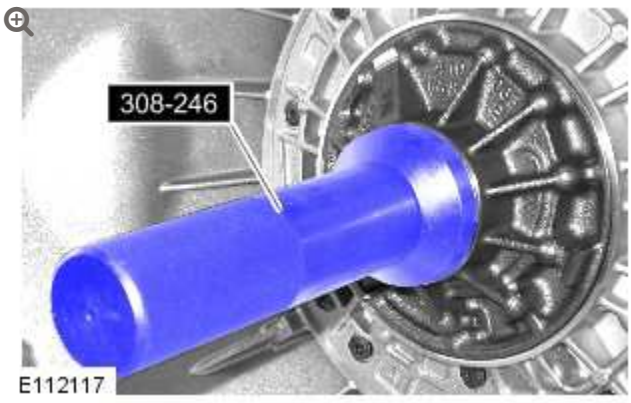

Special Tool(s): 308-246

2.

NOTE:

Make sure that the alignment mark is visable through the inspection hole as illustrated.

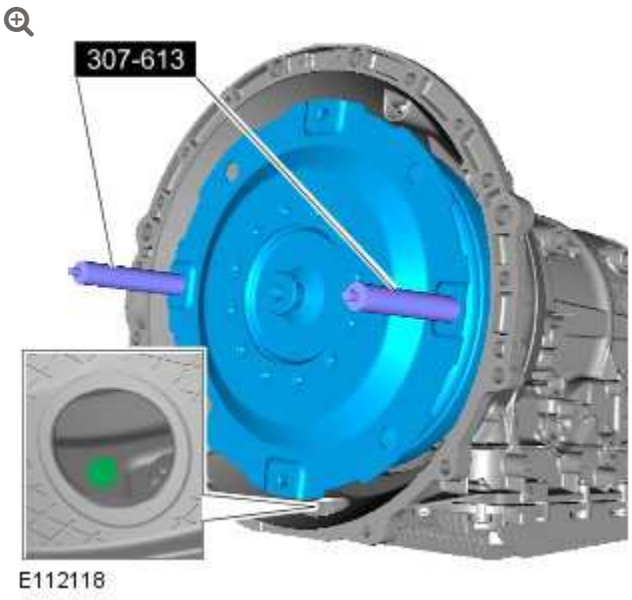

- Clean the seal contact area.

3.

CAUTION:

Make sure the torque converter is fully located into the oil pump drive.

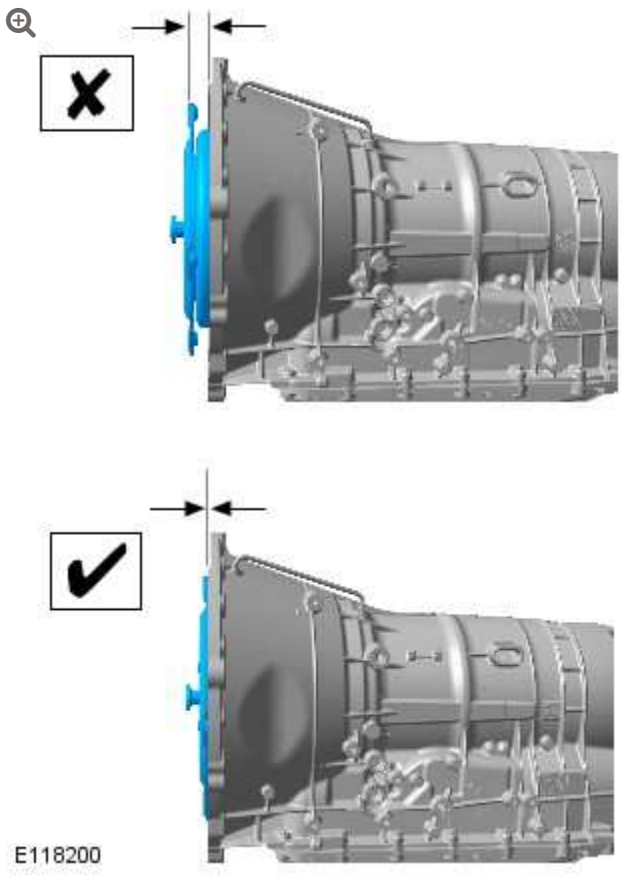

4. Refer to: Transmission - 5.0L NA V8 - AJ133/5.0L SC V8 - AJ133 (307-01B, Installation).

5. Connect the battery ground cable.
   Refer to: Specifications (414-00, Specifications).

6. Refer to: Transmission Fluid Level Check (307-01B, General Procedures).

AUTOMATIC TRANSMISSION/TRANSAXLE - V8 5.0L PETROL/V8 S/C 5.0L PETROL

SELECTOR SHAFT SEAL

(G1346660)

REMOVAL AND INSTALLATION

SPECIAL TOOL(S)



307-509-1 (LRT-44-033/1)

Seal extractor



307-509-2 (LRT-44-033/2)

Seal extractor



307-509-3 (LRT-44-033/3)

Seal installer

REMOVAL

NOTE:

Some variation in the illustrations may occur, but the essential information is always correct.

1. **WARNING:**

   Do not work on or under a vehicle supported only by a jack. Always support the vehicle on safety stands.

   Raise and support the vehicle.

2.

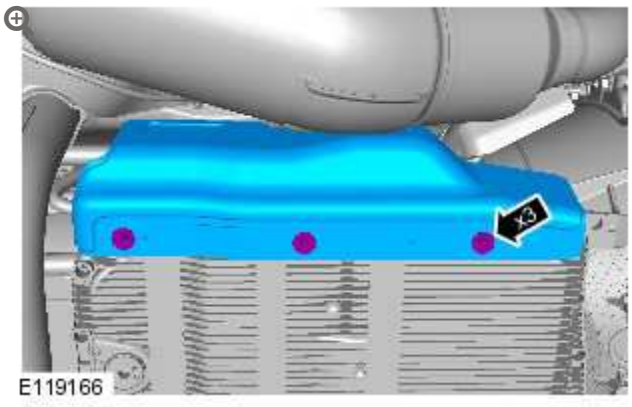

Remove the transmission heat shield.

3.

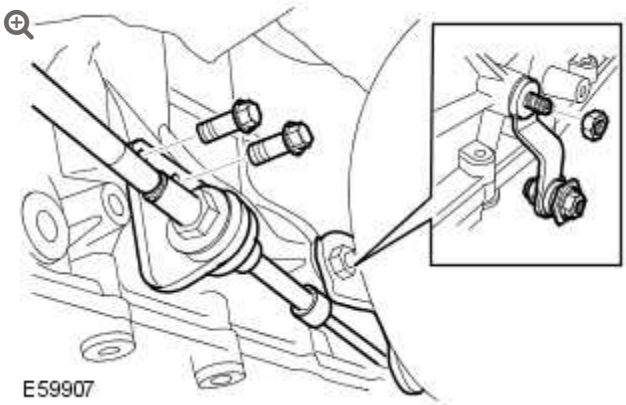

RH side only: Release the selector cable and lever.

- Remove the 2 bolts.
- Remove the nut.

4.

CAUTION:

Before the disconnection or removal of any components, make sure the area around joint faces and connections are clean. Plug any open connections to prevent contamination.

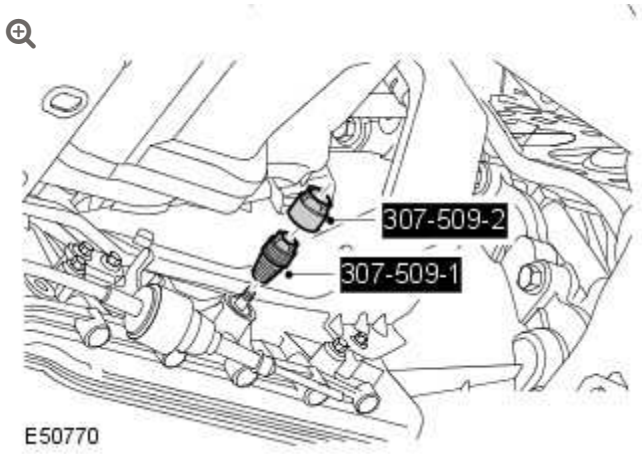

Remove the selector shaft seal.

- Install 307-509-1 to the seal.
- Install 307-509-2 to 307-509-1 and extract the seal.

INSTALLATION

1.

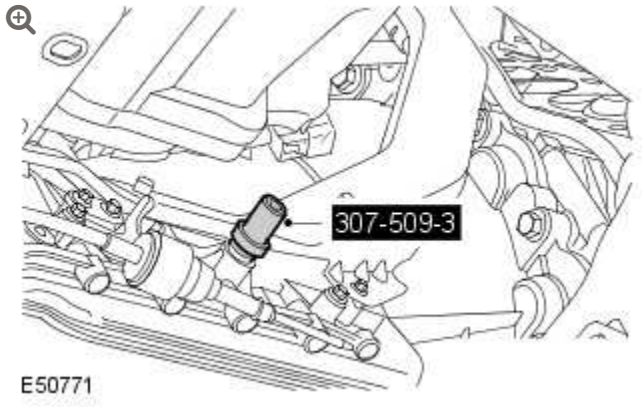

Using 307-509-3, install the selector shaft seal.

- Clean the components.

2. RH side only: Install the selector cable and lever.
   - Tighten the nut to 12 Nm (9 lb.ft).
   - Tighten the bolts to 10 Nm (7 lb.ft).

3. Carry out a transmission fluid level check.
   For additional information, refer to: Transmission Fluid Level Check (307-01, General Procedures).

4. Install the transmission heat shield.
   - Tighten the 3 bolts to 9 Nm (7 ft.lb).

AUTOMATIC TRANSMISSION/TRANSAXLE - V8 5.0L PETROL/V8 S/C 5.0L PETROL

TRANSMISSION – V8 5.0L PETROL/V8 S/C 5.0L PETROL (G1225173)

REMOVAL

44.20.01	GEARBOX - RENEW	5000 CC, AJ V8	4.7	USED WITHINS	+
44.20.02	GEARBOX AND TORQUE CONVERTER - RENEW	5000 CC, AJ V8	4.6	USED WITHINS	+

REMOVAL

NOTES:

- Some variation in the illustrations may occur, but the essential information is always correct.
- Removal steps in this procedure may contain installation details.

1. Disconnect the battery ground cable.

Refer to: Specifications (414-00, Specifications).

2. **WARNING:**

   Make sure to support the vehicle with axle stands.

   Raise and support the vehicle.

3. Refer to: Rear Driveshaft - 5.0L (205-01, Removal and Installation).

4. Refer to: Exhaust System (309-00, Removal and Installation).

5. Refer to: Front Driveshaft - 5.0L (205-01, Removal and Installation).

6. 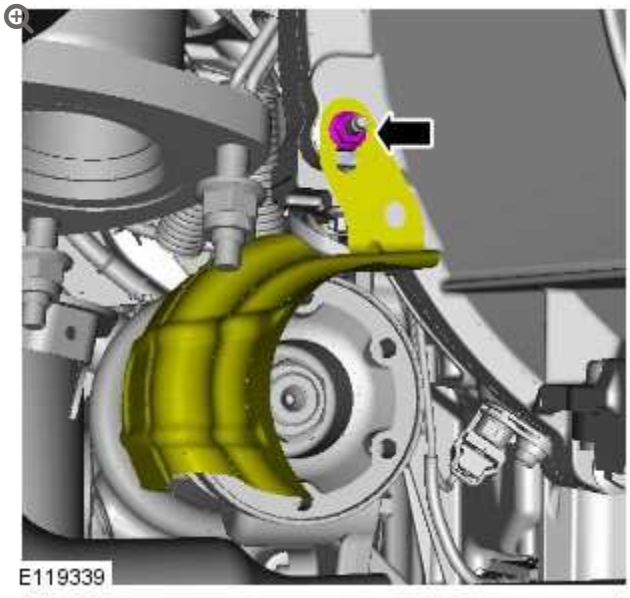

7.

CAUTIONS:

- Be prepared to collect escaping fluids.
- Make sure that all openings are sealed. Use new blanking caps.

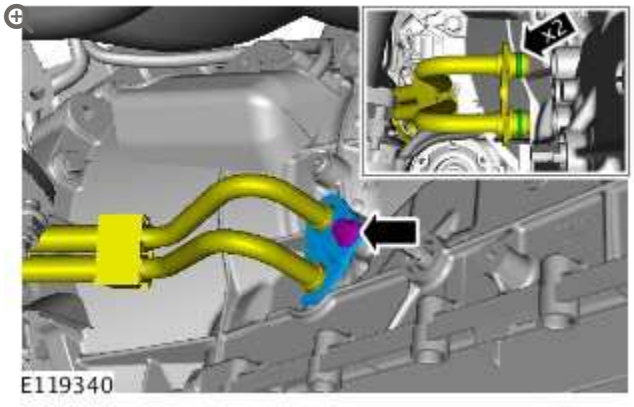

- Discard the O-ring seals.

8.

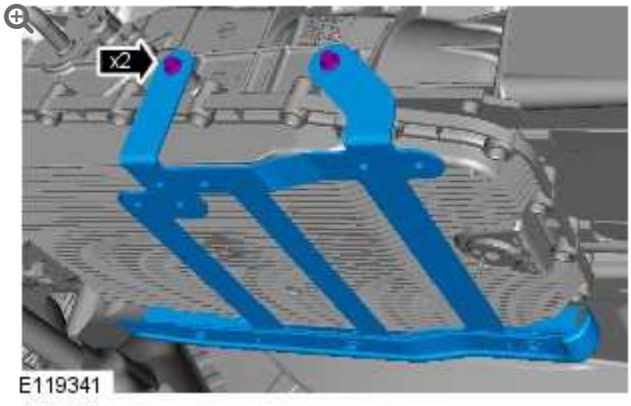

9.

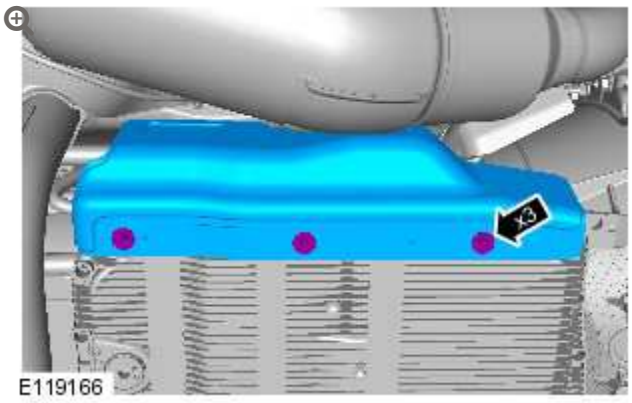

10.

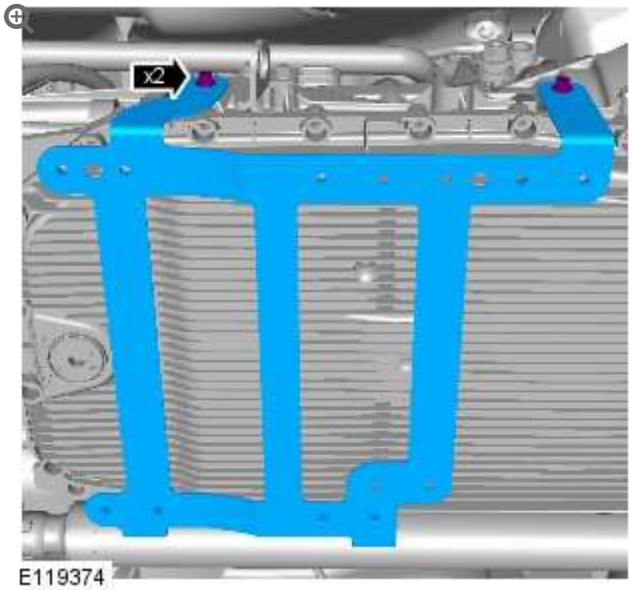

11.

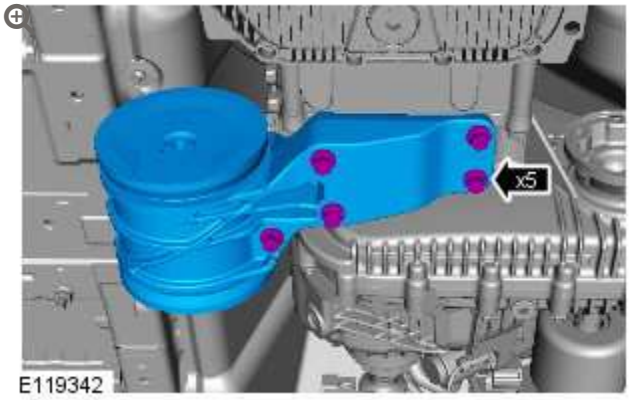

12.

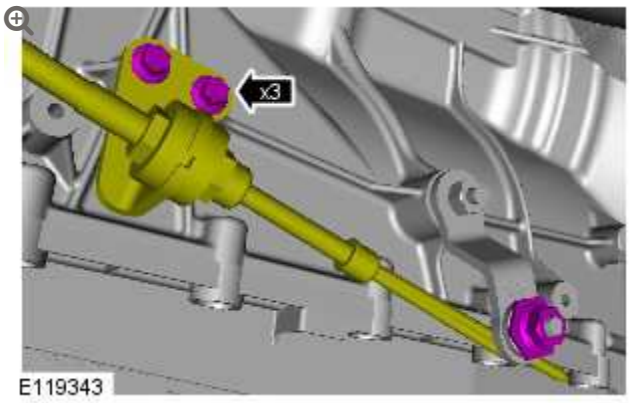

13.

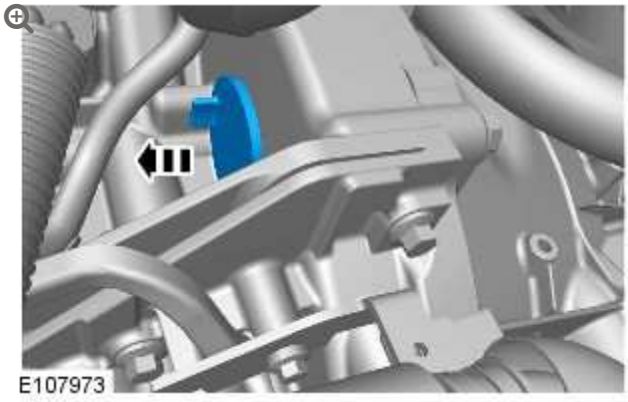

14.

CAUTION:

Only rotate the crankshaft clockwise.

NOTE:

Wheel shown removed for clarity.

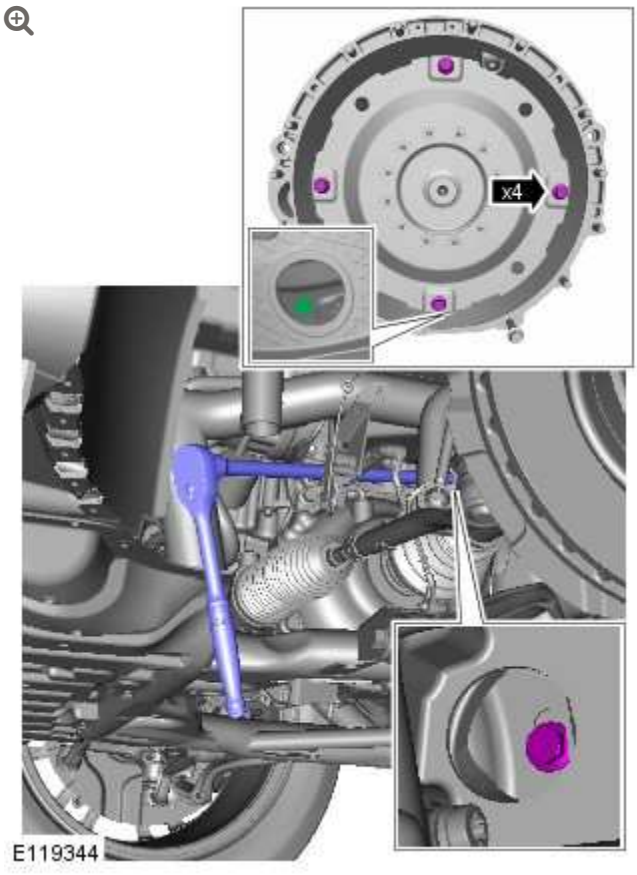

- Make sure that the alignment mark is visable through the inspection hole on removal of the last torque converter bolt.
- *Torque:* **63 Nm**

15.

WARNING:

Make sure that the transmission is secured with suitable retaining straps.

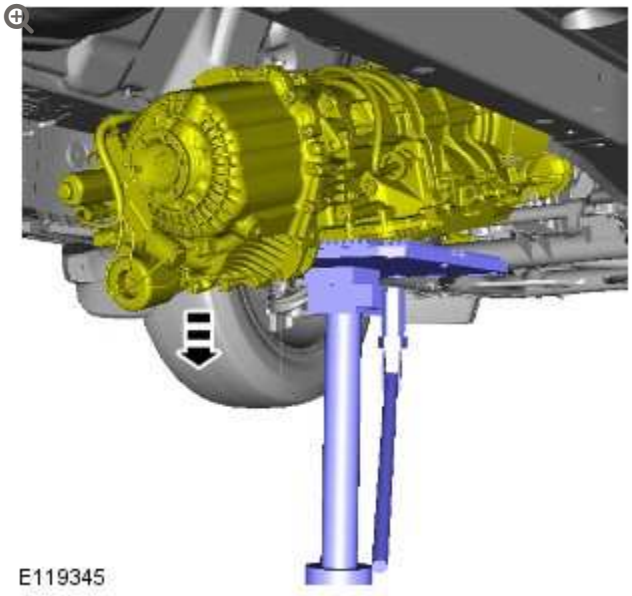

Lower the rear of the transmission for access.

16.

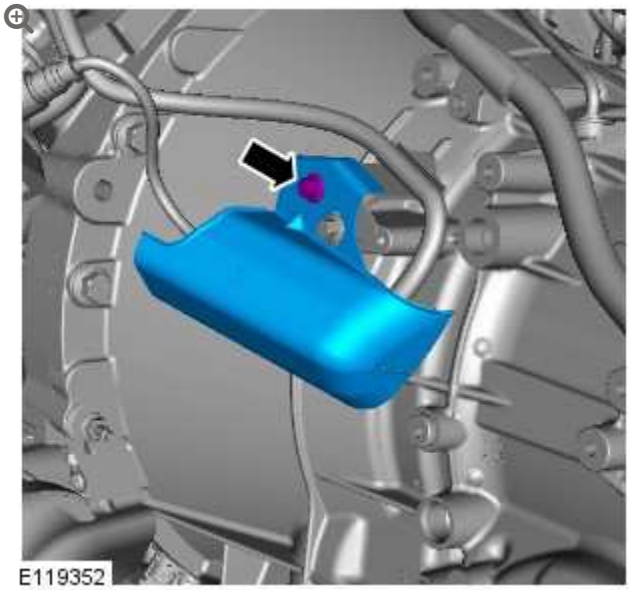

17.

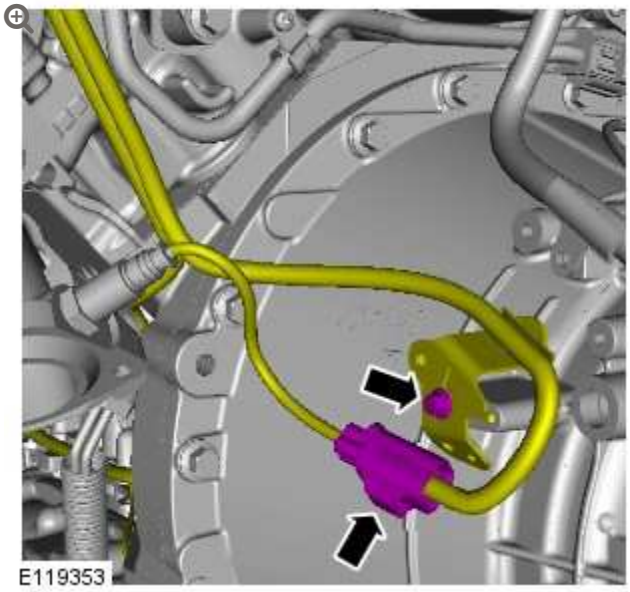

18.

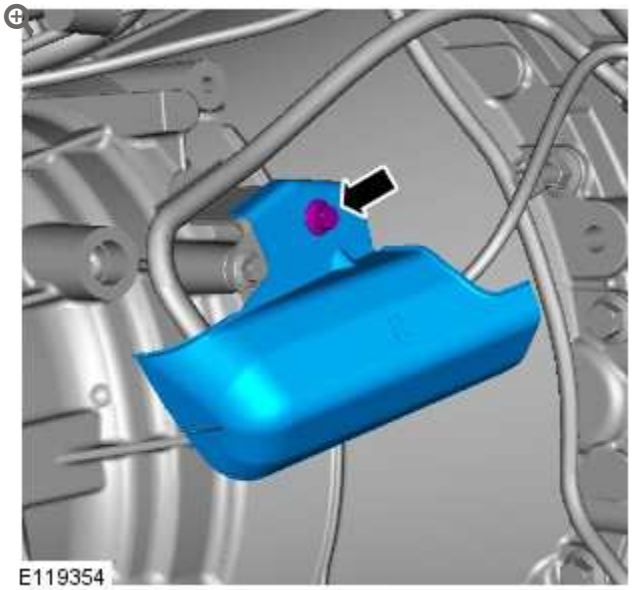

19.

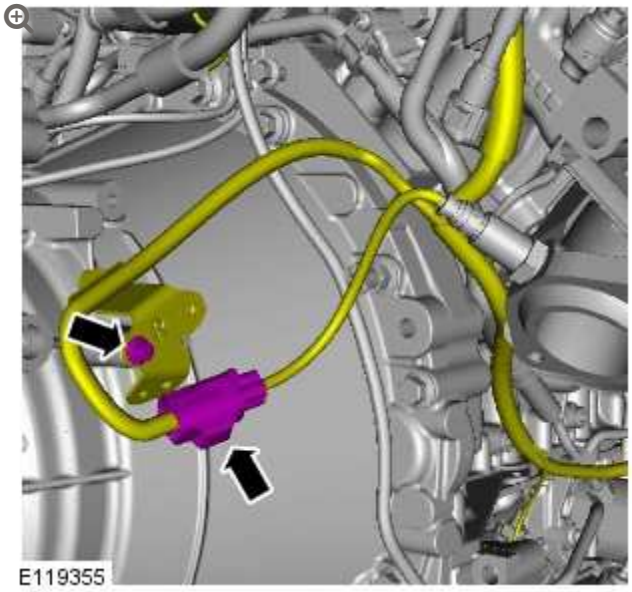

20.

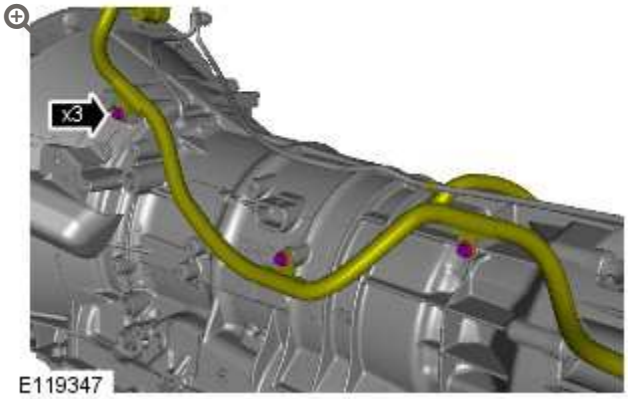

21.

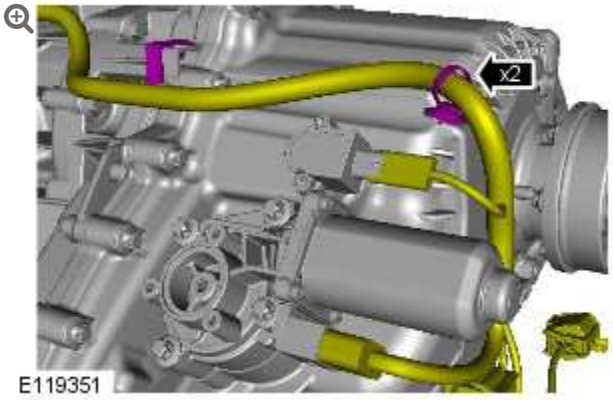

22.

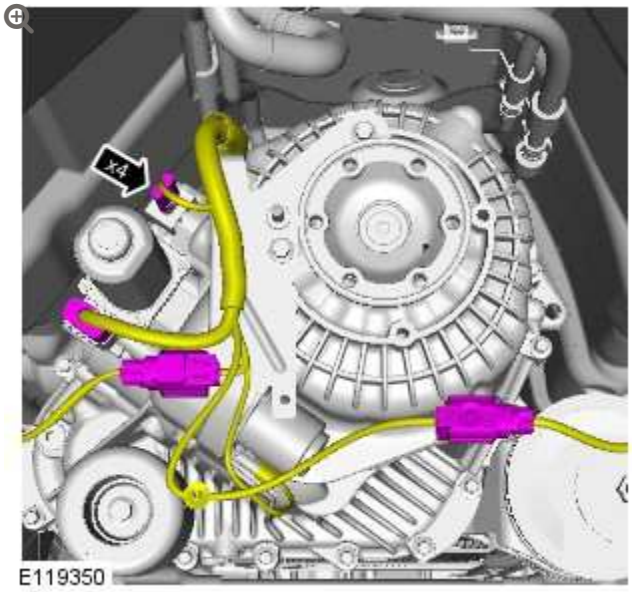

23.

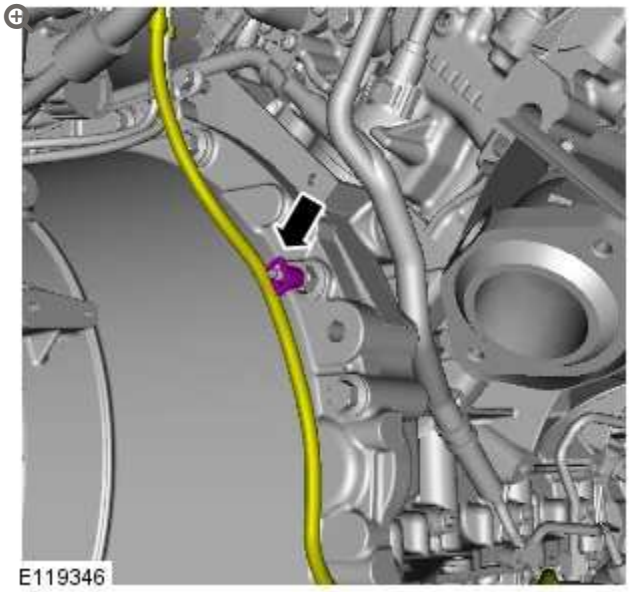

24.

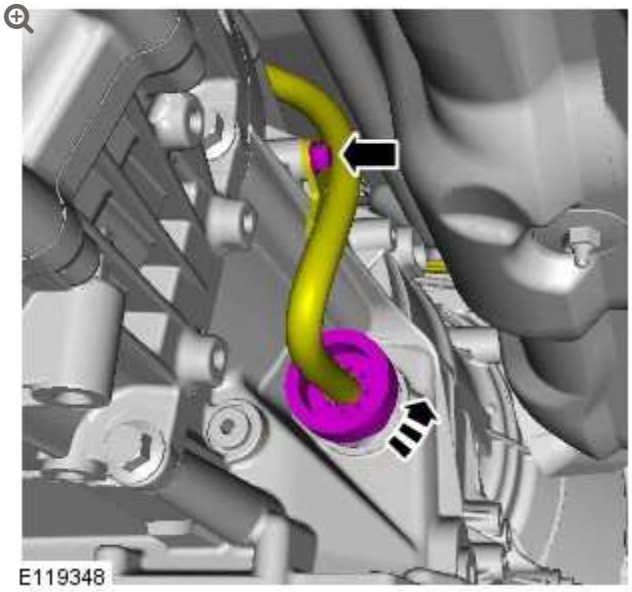

25.

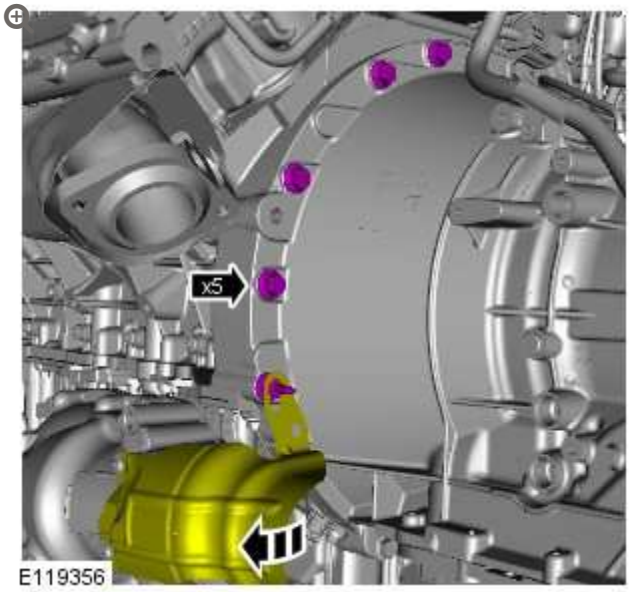

26.

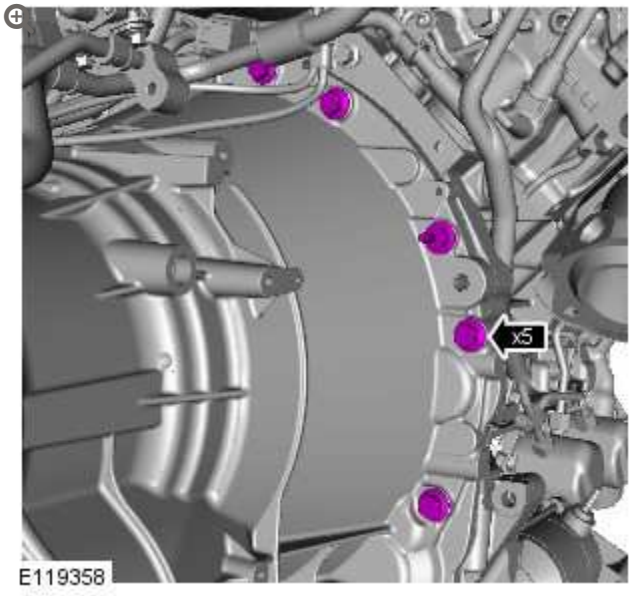

27.

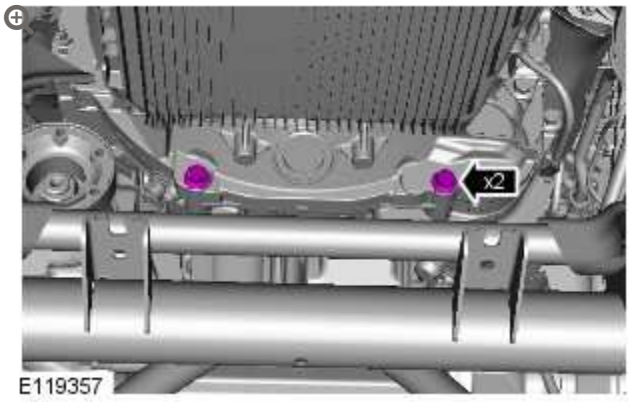

28.

CAUTION:

Make sure that the torque converter remains in the transmission.

NOTE:

This step requires the aid of another technician.

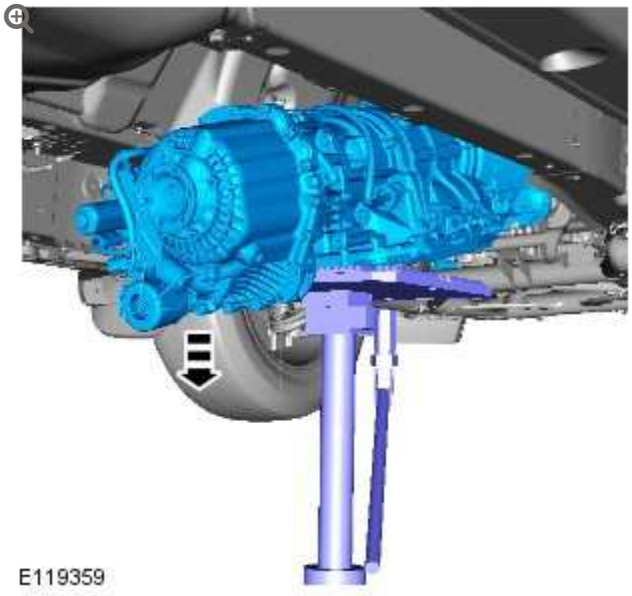

- Using a suitable hydraulic jack, support the transmission.
- Do not disassemble further if removed for access only
- Install the torque converter retainer.

AUTOMATIC TRANSMISSION/TRANSAXLE - V8 5.0L PETROL/V8 S/C 5.0L PETROL

TRANSMISSION – V8 5.0L PETROL/V8 S/C 5.0L PETROL (G1225174)

INSTALLATION

INSTALLATION

NOTES:

- Some variation in the illustrations may occur, but the essential information is always correct.
- Removal steps in this procedure may contain installation details.

1.

CAUTIONS:

- Apply grease of the correct specification to the torque converter spigot.
- Make sure the torque converter remains connected to the transmission.

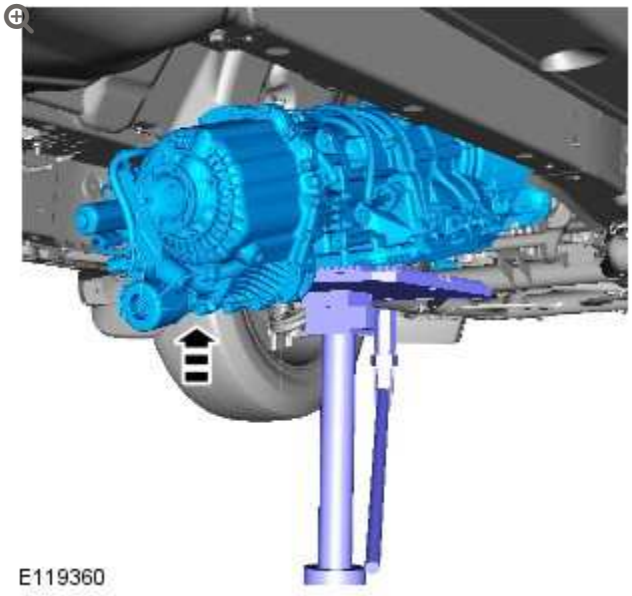

With assistance, install the transmission.

2.

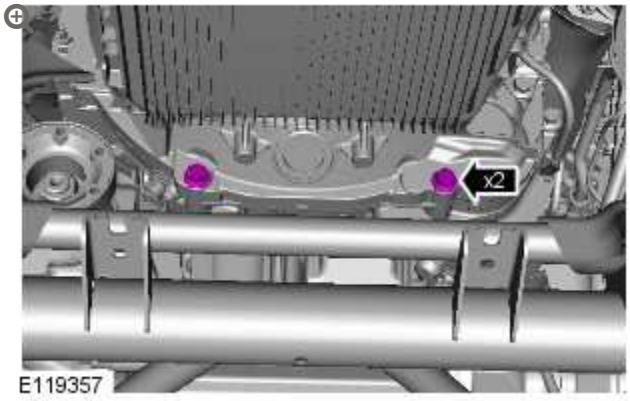

Torque: **40 Nm**

3.

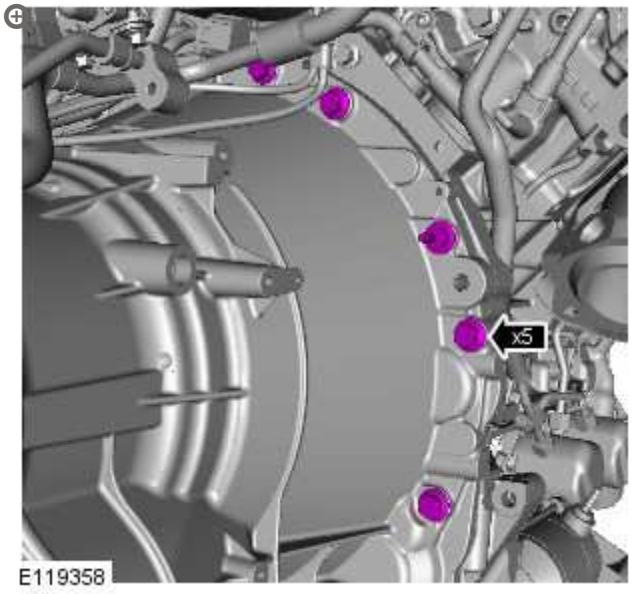

Torque: **40 Nm**

4.

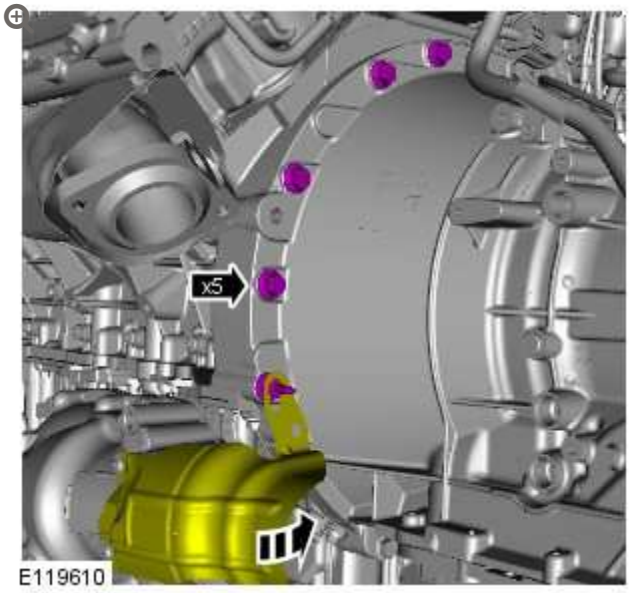

Torque: **40 Nm**

5.

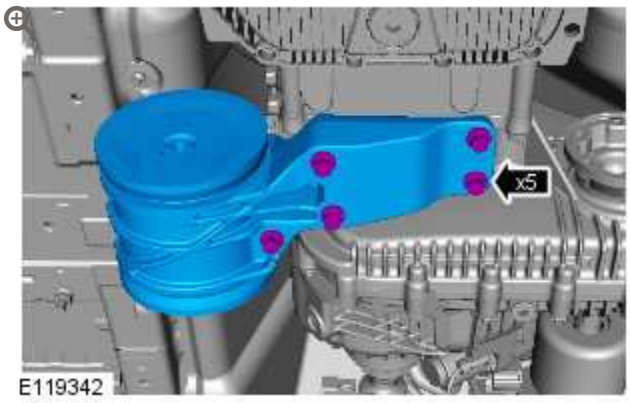

- Clean the component mating faces.
- *Torque:* **60 Nm**

6.

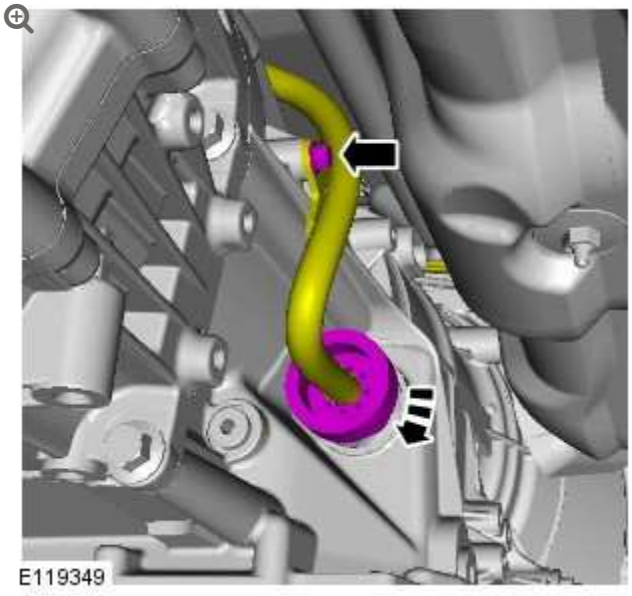

7.

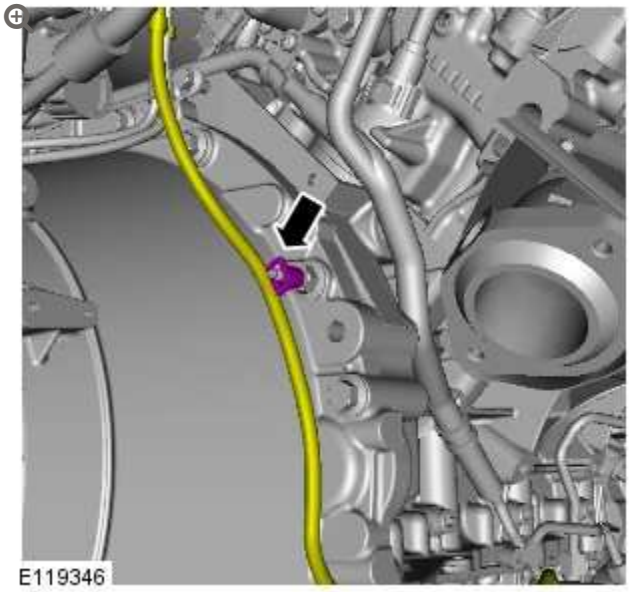

8.

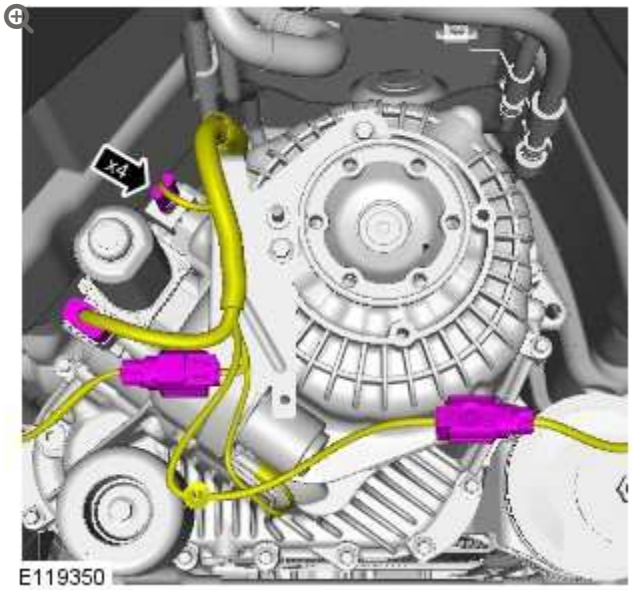

9.

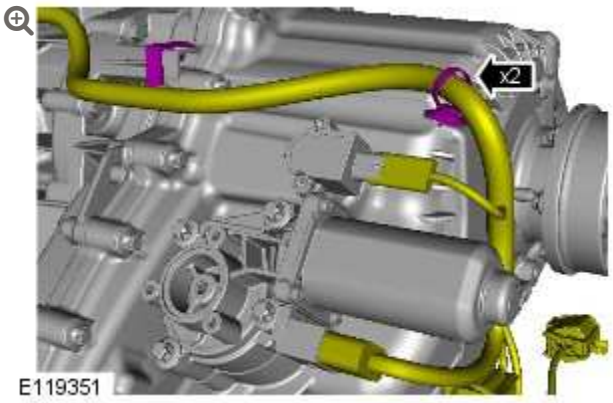

10.

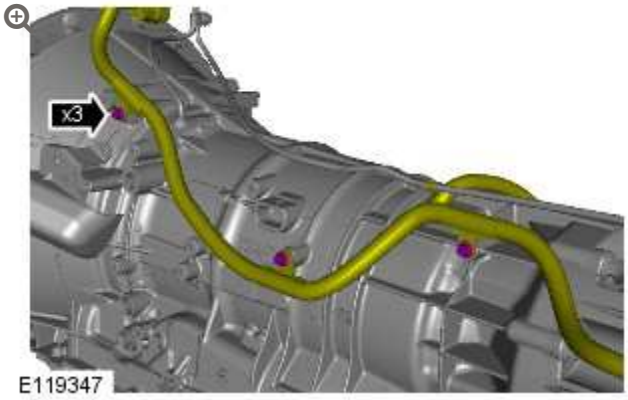

Torque: **10 Nm**

11.

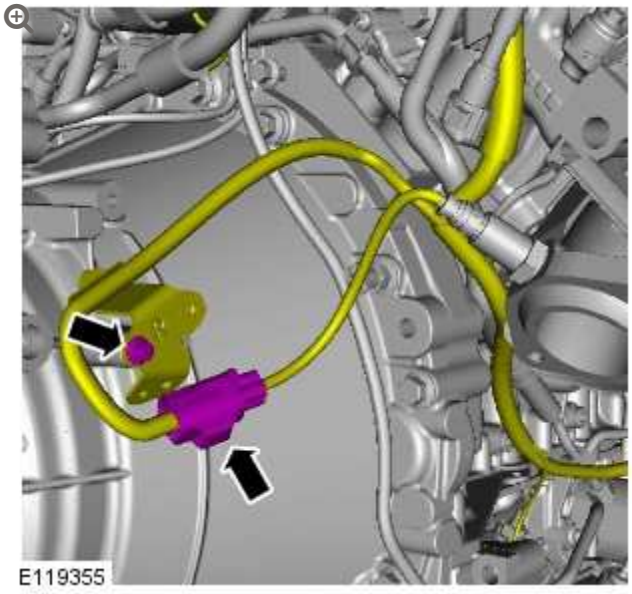

Torque: **10 Nm**

12.

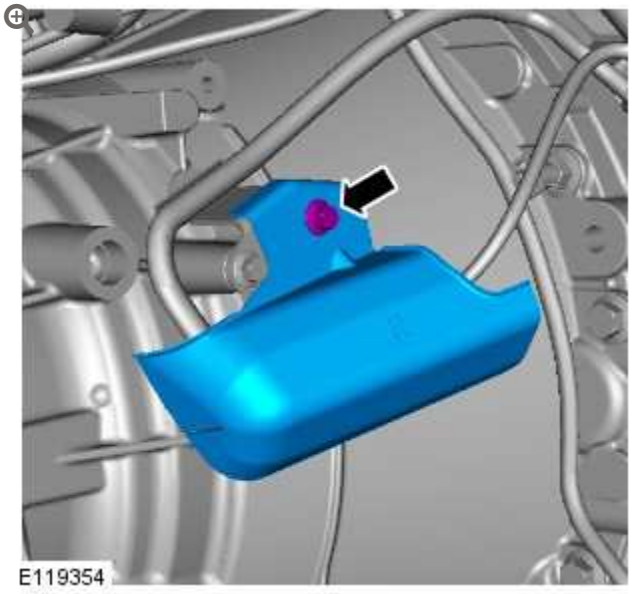

Torque: **10 Nm**

13.

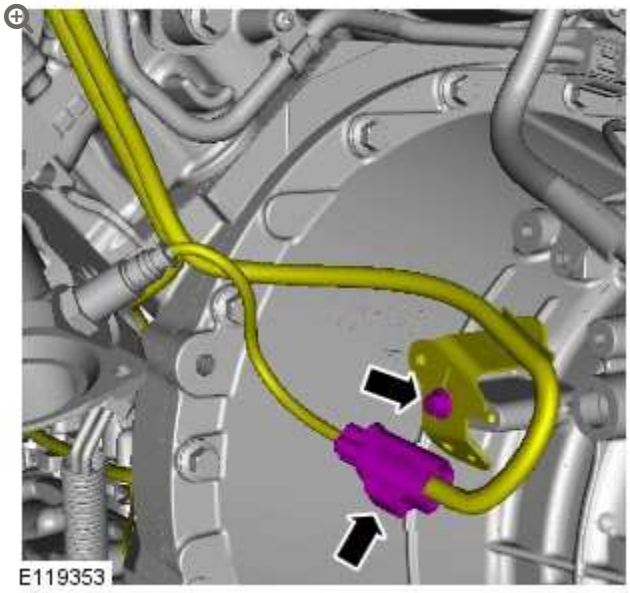

Torque: **10 Nm**

14.

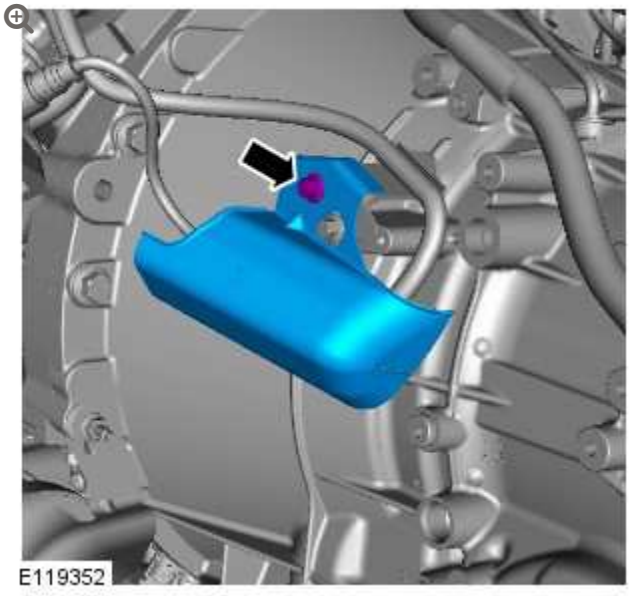

Torque: **10 Nm**

15.

CAUTION:

Only rotate the crankshaft clockwise.

NOTE:

Wheel shown removed for clarity.

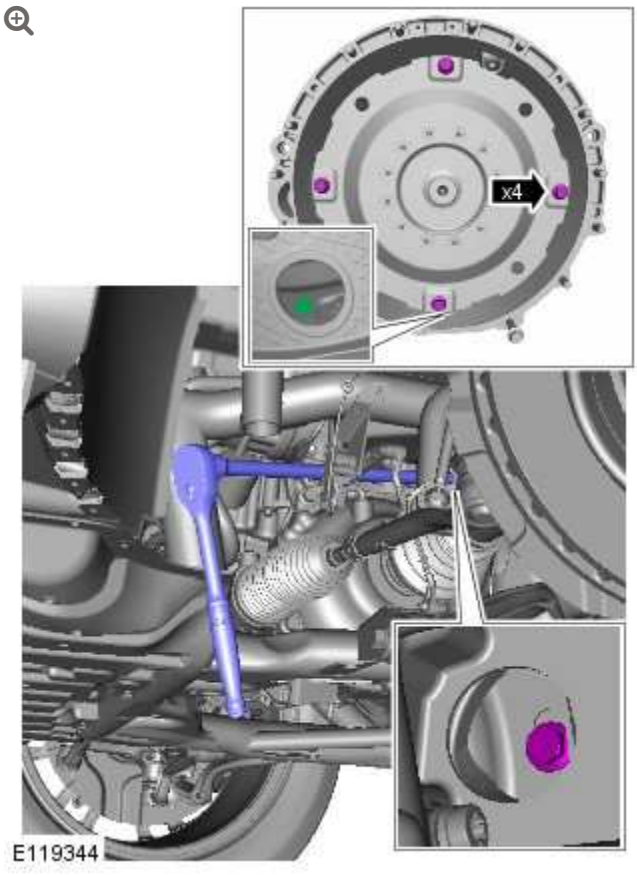

- Rotate the crankshaft clockwise to align the flexplate bolt holes.
- Make sure that the alignment mark is visable through the inspection hole on installation of the first torque converter bolt.
- *Torque:* **63 Nm**

16.

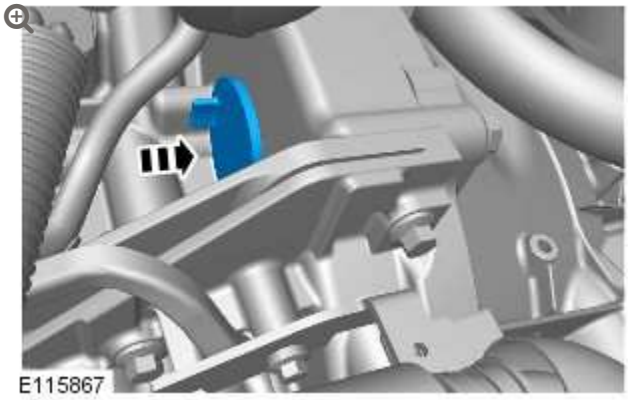

17.

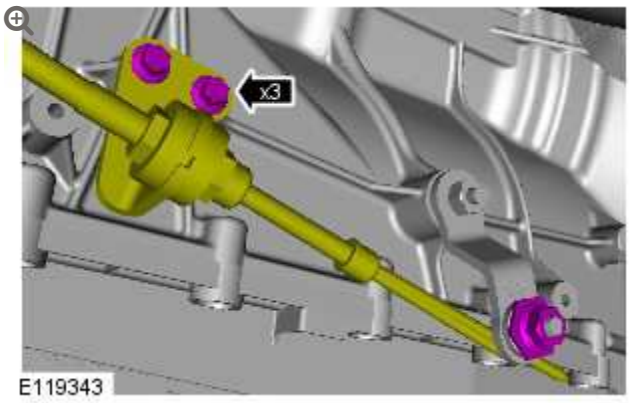

- *No text.

18.

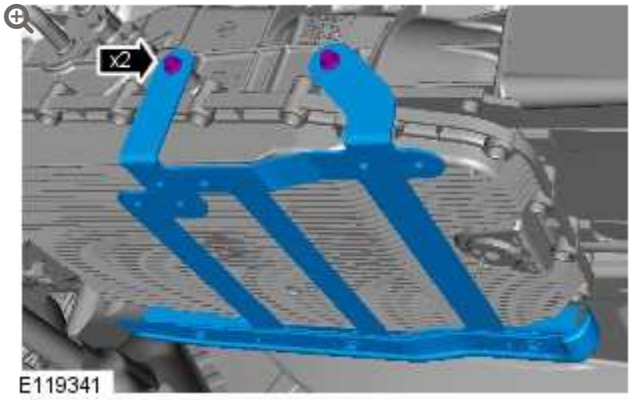

Torque: **9 Nm**

19.

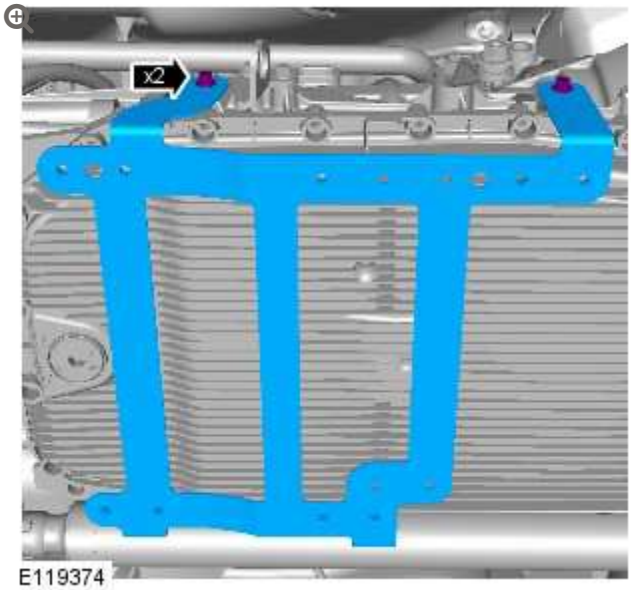

Torque: **9 Nm**

20.

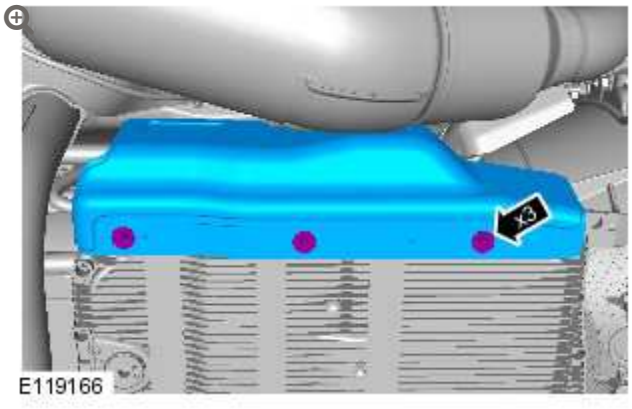

Torque: **9 Nm**

21.

CAUTIONS:

- Be prepared to collect escaping fluids.
- Make sure that all openings are sealed. Use new blanking caps.

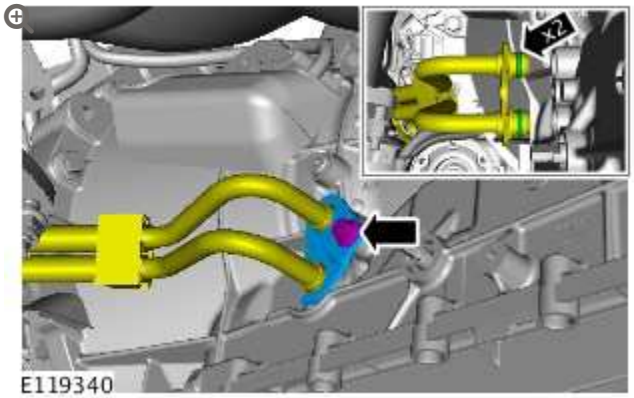

- Install new O-ring seals.
- *Torque:* **12 Nm**

22.

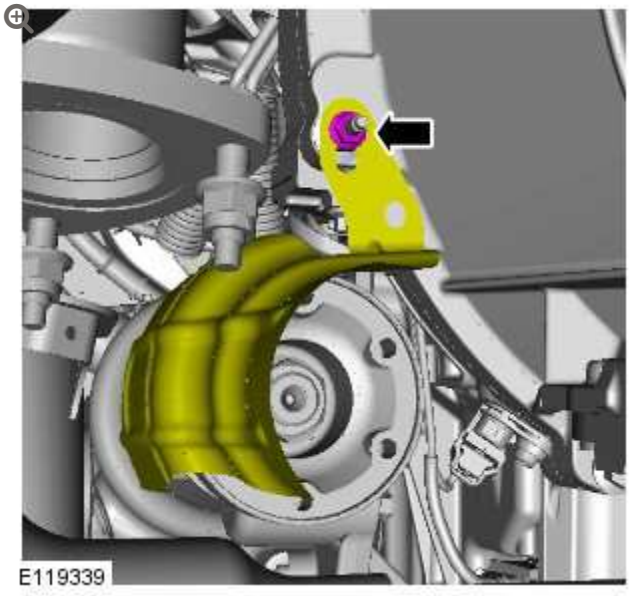

Torque: **10 Nm**

23. Refer to: Front Driveshaft - 5.0L (205-01, Removal and Installation).

24. Refer to: Exhaust System (309-00, Removal and Installation).

25. Refer to: Rear Driveshaft - 5.0L (205-01, Removal and Installation).

26. Lower the vehicle.

27. Connect the battery ground cable.
Refer to: Specifications (414-00, Specifications).

2012.0 RANGE ROVER (LM), 307-01

AUTOMATIC TRANSMISSION/TRANSAXLE – V8 5.0L PETROL/V8 S/C 5.0L PETROL

DESCRIPTION AND OPERATION

COMPONENT LOCATION

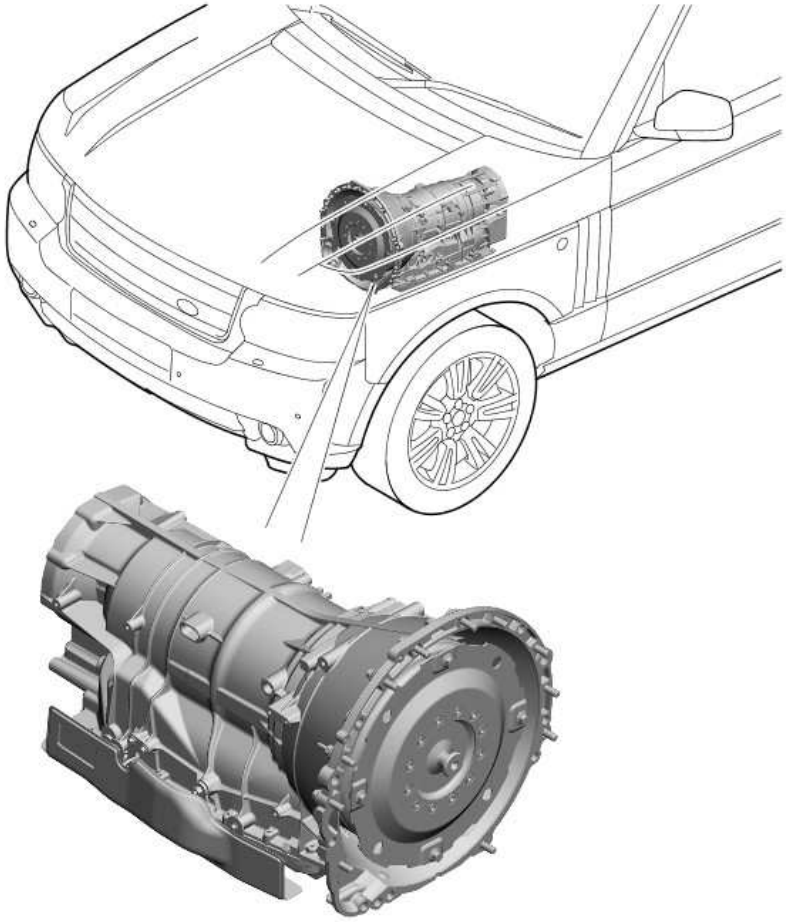

E119472

INTRODUCTION

The ZF 6HP28 transmission is an electronically controlled, hydraulically operated, six speed automatic unit. The hydraulic and electronic control elements of the transmission, including the TCM (transmission control module), are incorporated in a single unit located inside the transmission and is known as 'Mechatronic'.

On SC (supercharger) models, the transmission used is an uprated derivative of the ZF 6HP28 transmission used in the 5.0L naturally aspirated models.

The ZF 6HP28 transmission has the following features:

- Designed to be maintenance free
- Transmission fluid is 'fill for life'
- The torque converter features a controlled slip feature with electronically regulated control of lock-up, creating a smooth transition to the fully locked condition
- Shift programs controlled by the TCM
- ASIS (adaptive shift strategy), to provide continuous adaptation of shift changes to suit the driving style of the driver, which can vary from sporting to economical
- Connected to the ECM (engine control module) via the high speed CAN (controller area network) bus for communications
- Default mode if major faults occur
- Diagnostics available from the TCM via the high speed CAN bus.

The transmission selections are made using the selector lever in the floor console.
For additional information, refer to: External Controls (307-05B, Description and Operation).

TRANSMISSION

The transmission comprises the main casing which houses all of the transmission components. The main casing also incorporates an integral bell housing.

A fluid pan is attached to the lower face of the main casing and is secured with bolts. The fluid pan is sealed to the main casing with a gasket. Removal of the fluid pan allows access to the Mechatronic valve block. The fluid pan has a magnet located around the drain plug which collects any metallic particles present in the transmission fluid.

A fluid filter is located inside the fluid pan. If the transmission fluid becomes contaminated or after any service work, the fluid pan with integral filter must be replaced.

On the RH (right-hand) side of the transmission, a gear change lever is installed on the end of a selector shaft. The selector shaft operates a selector spool valve and a selector switch in the transmission. A selector cable, connected between the gear change lever and the selector lever in the floor console, controls the position of the selector shaft.

The integral bell housing provides protection for the torque converter assembly and also provides the attachment for the gearbox to the engine. The torque converter is a non-serviceable assembly which also contains the lock-up clutch mechanism. The torque converter drives a crescent type pump via drive tangs. The fluid pump is located in the main casing, behind the torque converter.

The main casing contains the following major components:

- Input shaft
- Output shaft
- Mechatronic valve block which contains the solenoids, speed sensors and the TCM
- Three rotating multiplate drive clutches
- Two fixed multiplate brake clutches
- A single planetary gear train and a double planetary gear train.

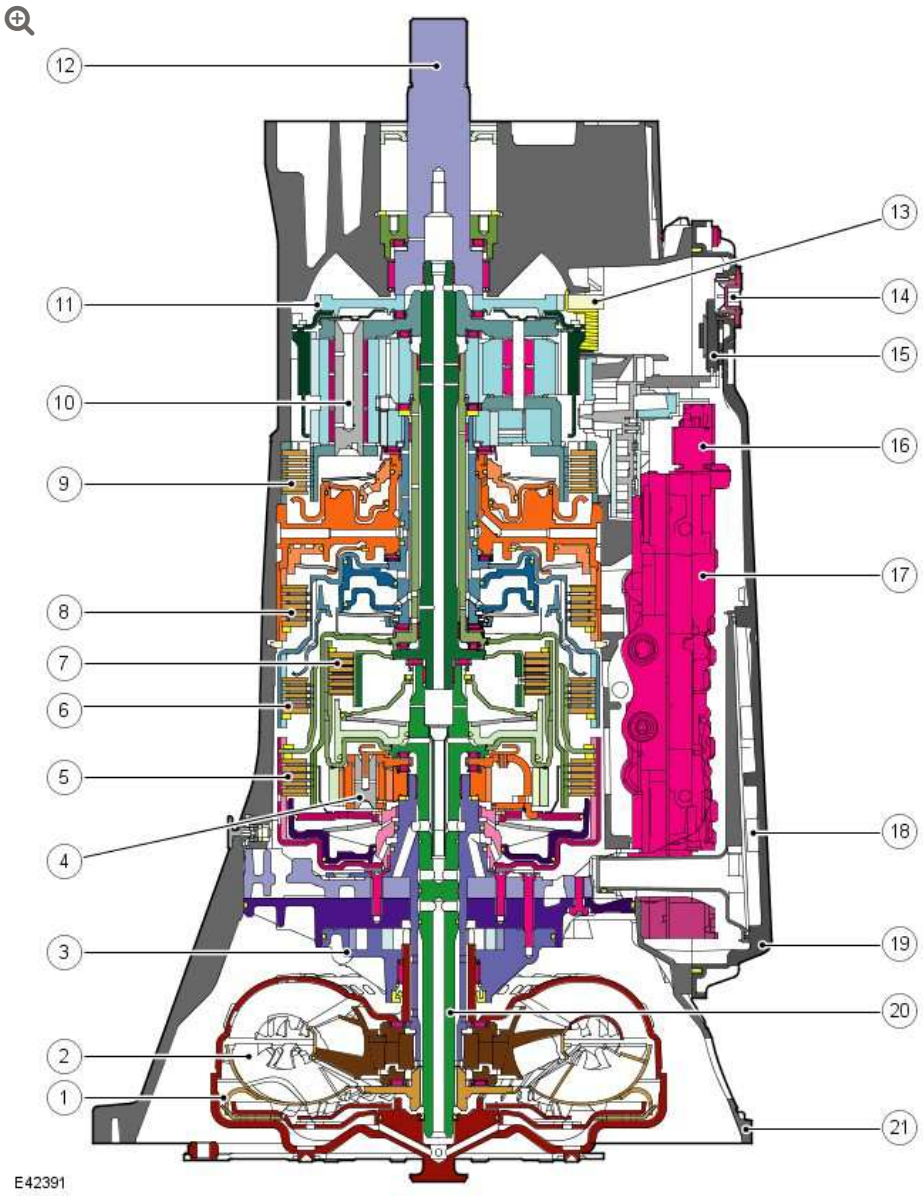

ITEM	DESCRIPTION
1	Torque converter lock-up clutch
2	Torque converter
3	Fluid pump
4	Single planetary gearset
5	Clutch A
6	Clutch B
7	Clutch E
8	Brake C

ITEM	DESCRIPTION
9	Brake D
10	Double planetary gearset
11	Park lock gear
12	Output shaft
13	Park lock pawl
14	Drain plug
15	Magnet
16	Pressure regulator
17	Mechatronic valve block
18	Fluid filter
19	Fluid pan
20	Input shaft
21	Transmission casing

TORQUE CONVERTER

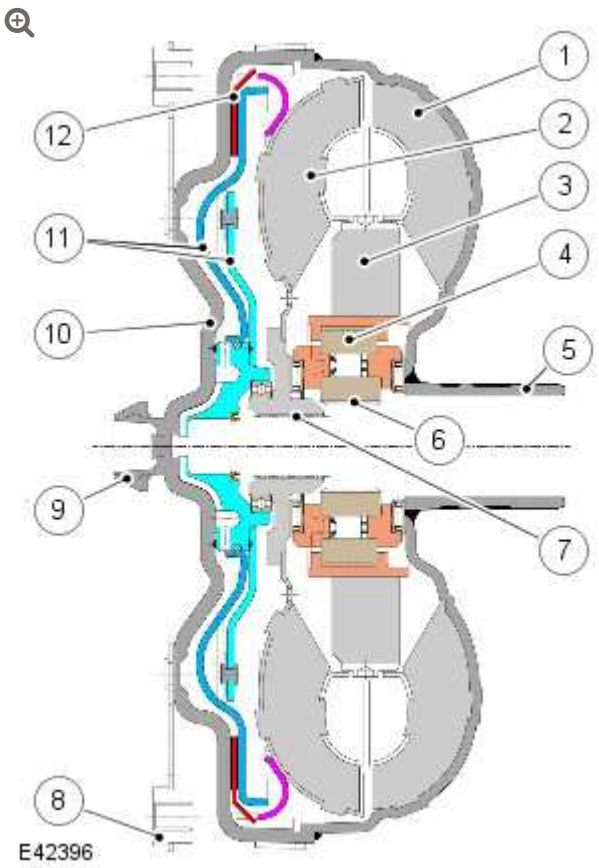

ITEM	DESCRIPTION
1	Impeller
2	Turbine
3	Stator
4	Freewheel clutch
5	Torque converter hub
6	Stator shaft
7	Turbine shaft
8	Drive plate
9	Journal - Drive plate/crankshaft location
10	Torque converter cover
11	Lock-up clutch piston

ITEM	DESCRIPTION
12	Lock-up clutch plate

The torque converter is the coupling element between the engine and the transmission and is located in the bell housing, on the engine side of the transmission. The driven power from the engine crankshaft is transmitted hydraulically and mechanically through the torque converter to the transmission. The torque converter is connected to the engine by a drive plate attached to the rear of the crankshaft.

The torque converter comprises an impeller, a stator and a turbine. The torque converter is a sealed unit with all components located between the converter housing cover and the impeller. The two components are welded together to form a sealed, fluid filled housing. With the impeller welded to the converter housing cover, the impeller is therefore driven at engine crankshaft speed.

The converter housing cover has four threaded bosses, which provide for attachment of the engine drive plate. The threaded bosses also provide for location of special tools which are required to remove the torque converter from the bell housing.

IMPELLER

Fluid Flow

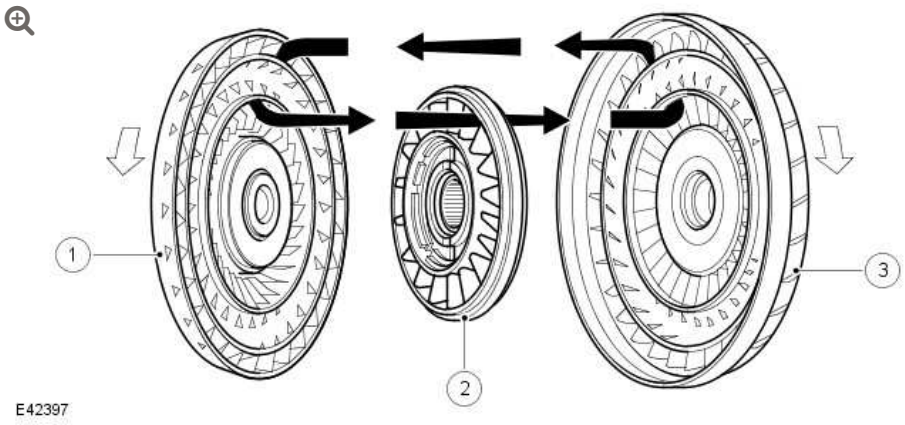

ITEM	DESCRIPTION
1	Turbine
2	Stator
3	Impeller

When the engine is running the rotating impeller acts as a centrifugal pump, picking up fluid at its center and discharging it at high velocity through the blades on its outer rim. The design and shape of the blades and the curve of the impeller body cause the fluid to rotate in a clockwise direction as it leaves the impeller. This rotation improves the efficiency of the fluid as it contacts the outer row of blades on the turbine.

The centrifugal force of the fluid leaving the blades of the impeller is passed to the curved inner surface of the turbine via the tip of the blades. The velocity and clockwise rotation of the fluid causes the turbine to rotate.

TURBINE

The turbine is similar in design to the impeller with a continuous row of blades. Fluid from the impeller enters the turbine through the tip of the blades and is directed around the curved body of the turbine to the root of the blades. The curved surface redirects the fluid back in the opposite direction to which it entered the turbine, effectively increasing the turning force applied to the turbine from the impeller. This principle is known as torque multiplication.

When engine speed increases, turbine speed also increases. The fluid leaving the inner row of the turbine blades is rotated in a counter-clockwise direction due to the curve of the turbine and the shape of the blades. The fluid is now flowing in the opposite direction to the engine rotation and therefore the impeller. If the fluid was allowed to hit the impeller in this condition, it would have the effect of applying a brake to the impeller, eliminating the torque multiplication effect.

To prevent this, the stator is located between the impeller and the turbine.

STATOR

The stator is located on the splined transmission input shaft via a freewheel clutch. The stator comprises a number of blades which are aligned in an opposite direction to those of the impeller and turbine. The main function of the stator is to redirect the returning fluid from the turbine, changing its direction to that of the impeller.

The redirected fluid from the stator is directed at the inner row of blades of the impeller, assisting the engine in turning the impeller. This sequence increases the force of the fluid emitted from the impeller and thereby increases the torque multiplication effect of the torque converter.

Stator Functions

NOTE:

The following illustration shows a typical stator

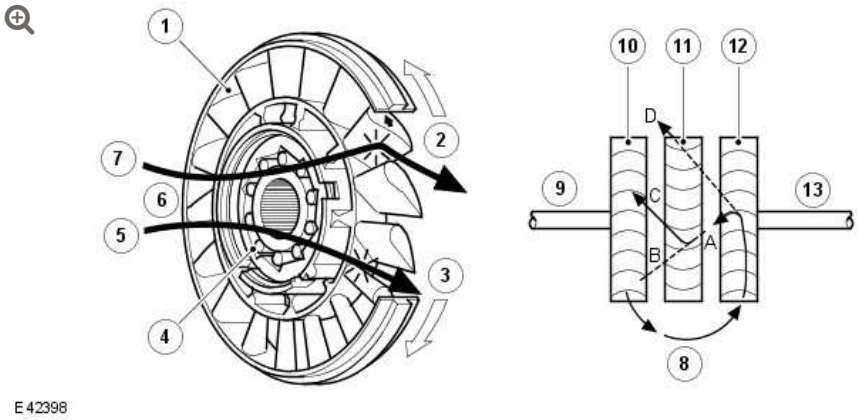

ITEM	DESCRIPTION
1	Blades
2	Stator held – fluid flow redirected

ITEM	DESCRIPTION
3	Stator rotates freely
4	Roller
5	Converter at coupling speed
6	Fluid flow from turbine
7	Converter multiplying
8	Fluid flow from impeller
9	Drive from engine
10	Impeller
11	Stator
12	Turbine
13	Output to transmission

Fluid emitted from the impeller acts on the turbine. If the turbine is rotating at a slower speed than the fluid from the impeller, the fluid will be deflected by the turbine blades in the path **'A'**. The fluid is directed at and deflected by the stator blades from path **'B'** to path **'C'**. This ensures that the fluid is directed back to the pump in the optimum direction. In this condition the sprag clutch is engaged and the force of the fluid on the stator blades assists the engine in rotating the impeller.

As the rotational speed of the engine and therefore the turbine increases, the direction of the fluid leaving the turbine changes to path **'D'**. The fluid is now directed from the turbine to the opposite side of the stator blades, rotating the stator in the opposite direction. To prevent the stator from resisting the smooth flow of the fluid from the turbine, the sprag clutch releases, allowing the stator to rotate freely on its shaft.

When the stator becomes inactive, the torque converter no longer multiplies the engine torque. When the torque converter reaches this

operational condition it ceases to multiply the engine torque and acts solely as a fluid coupling, with the impeller and the turbine rotating at approximately the same speed.

The stator uses a sprag type, one way, freewheel clutch. When the stator is rotated in a clockwise direction the sprags twist and are wedged between the inner and outer races. In this condition the sprags transfer the rotation of the outer race to the inner race which rotates at the same speed.

ONE WAY FREE WHEEL CLUTCH – TYPICAL

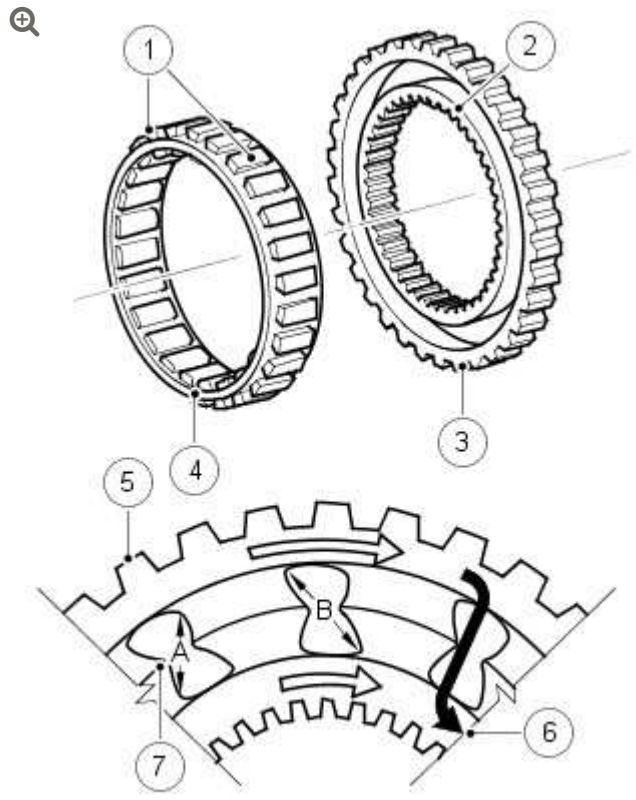

ITEM	DESCRIPTION
1	Sprags
2	Inner race
3	Outer race
4	Sprag and cage assembly
5	Sprag outer race

ITEM	DESCRIPTION
6	Sprag inner race
7	Retaining ring

The free wheel clutch can perform three functions; hold the stator stationary, drive the stator and free wheel allowing the stator to rotate without a drive output. The free wheel clutch used in the ZF 6HP28 transmission is of the sprag type and comprises an inner and outer race and a sprag and cage assembly. The inner and outer races are pressed into their related components with which they rotate. The sprag and cage assembly is located between the inner and outer races.

The sprags are located in a cage which is a spring which holds the sprags in the 'wedge' direction and maintains them in contact with the inner and outer races.

Referring to the illustration, the sprags are designed so that the dimension **'B'** is larger than the distance between the inner and outer race bearing surfaces. When the outer race rotates in a clockwise direction, the sprags twist and the edges across the dimension **'B'** wedge between the races, providing a positive drive through each sprag to the inner race. The dimension **'A'** is smaller than the distance between the inner and outer race bearing surfaces. When the outer race rotates in an anti-clockwise direction, the dimension **'A'** is too small to allow the sprags to wedge between the races, allowing the outer race to rotate freely.

On the illustration shown, when the outer race is rotated in a clockwise direction, the sprags twist and are 'wedged' between the inner and outer races. The sprags then transfer the rotation of the outer race to the inner race, which rotates at the same speed.

LOCK-UP CLUTCH MECHANISM

The TCC (torque converter clutch) is hydraulically controlled by an EPRS (electronic pressure regulating solenoid), which is controlled by the TCM. This allows the torque converter to have three states of operation as follows:

- Fully engaged
- Controlled slip variable engagement
- Fully disengaged.

The TCC is controlled by two hydraulic spool valves located in the valve block. These valves are actuated by pilot pressure supplied via a solenoid valve which is also located in the valve block. The solenoid valve is operated by PWM (pulse width modulation) signals from the TCM to give full, partial or no lock-up of the torque converter.

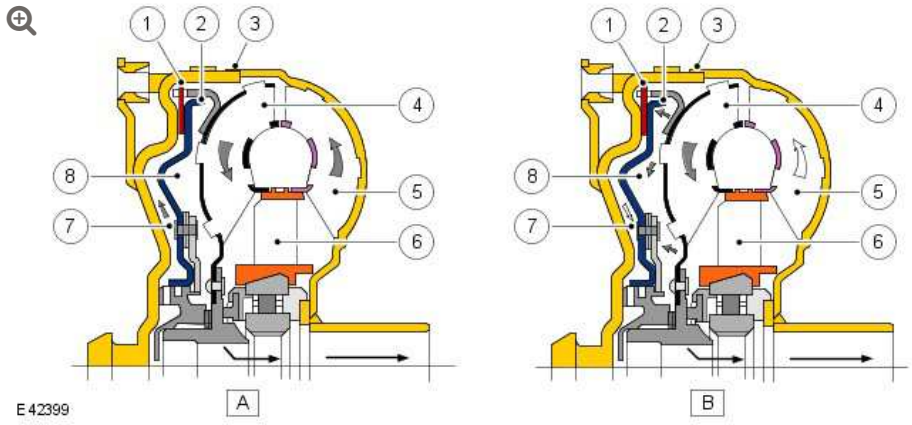

ITEM	DESCRIPTION
A	Unlocked condition
B	Locked condition
1	Clutch plate
2	Clutch piston
3	Torque converter body
4	Turbine
5	Impeller

ITEM	DESCRIPTION
6	Stator
7	Piston chamber
8	Turbine chamber

The lock-up clutch is a hydro-mechanical device which eliminates torque converter slip, improving fuel consumption. The engagement and disengagement is controlled by the TCM to allow a certain amount of controlled 'slip'. This allows a small difference in the rotational speeds of the impeller and the turbine which results in improved shift quality. The lock-up clutch comprises a piston and a clutch friction plate.

In the unlocked condition, the oil pressure supplied to the piston chamber and the turbine chamber is equal. Pressurized fluid flows through a drilling in the turbine shaft and through the piston chamber to the turbine chamber. In this condition the clutch plate is held away from the torque converter body and torque converter slip is permitted.

In the locked condition, the TCC spool valves are actuated by the EPRS. The fluid flow in the unlocked condition is reversed and the piston chamber is vented. Pressurized fluid is directed into the turbine chamber and is applied to the clutch piston. The piston moves with the pressure and pushes the clutch plate against the torque converter body. As the pressure increases, the friction between the clutch plate and the body increases, finally resulting in full lock-up of the clutch plate with the body. In this condition there is direct mechanical drive from the engine crankshaft to the transmission planetary gear train.

FLUID PUMP

The fluid pump is an integral part of the transmission. The fluid pump is used to supply hydraulic pressure for the operation of the control valves and clutches, to pass the fluid through the transmission cooler and to lubricate the gears and shafts.

The ZF 6HP28 fluid pump is a crescent type pump and is located between the intermediate plate and the torque converter. The pump has a delivery rate of 16 cm^3 per revolution.

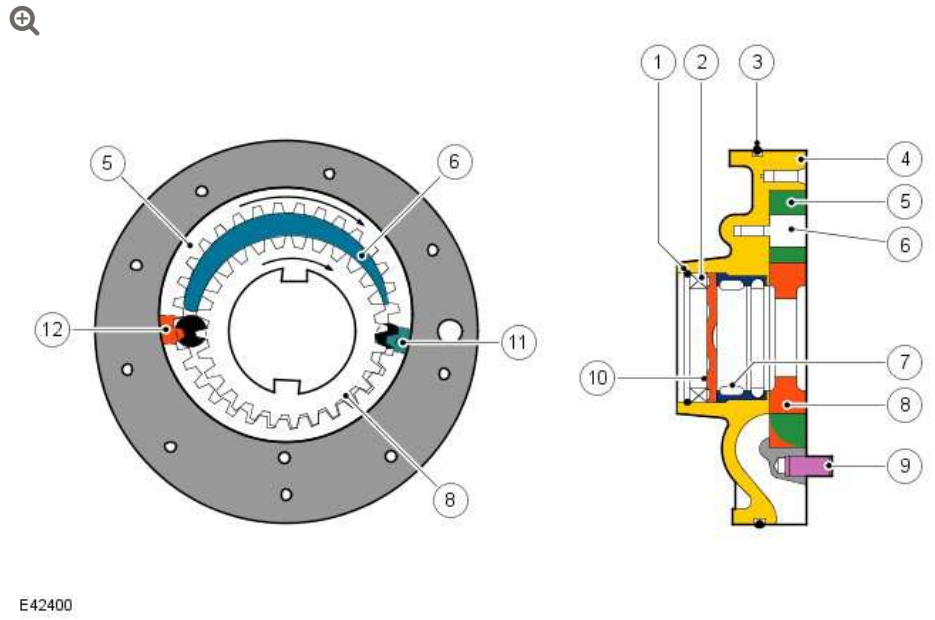

E42400

ITEM	DESCRIPTION
1	Securing ring
2	Shaft oil seal
3	O-ring seal
4	Pump housing
5	Ring gear
6	Crescent spacer
7	Roller bearing
8	Impeller
9	Centering pin
10	Spring washer

ITEM	DESCRIPTION
11	Outlet port (high pressure)
12	Inlet port (low pressure)

The pump comprises a housing, a crescent spacer, an impeller and a ring gear. The housing has inlet and outlet ports to direct flow and is located in the intermediate plate by a centering pin. The pump action is achieved by the impeller, ring gear and crescent spacer.

The crescent spacer is fixed in its position by a pin and is located between the ring gear and the impeller. The impeller is driven by drive from the torque converter hub which is located on a needle roller bearing in the pump housing. The impeller teeth mesh with those of the ring gear. When the impeller is rotated, the motion is transferred to the ring gear which rotates in the same direction.

The rotational motion of the ring gear and the impeller collects fluid from the intake port in the spaces between the teeth. When the teeth reach the crescent spacer, the oil is trapped in the spaces between the teeth and is carried with the rotation of the gears. The spacer tapers near the outlet port. This reduces the space between the gear teeth causing a build up of fluid pressure as the oil reaches the outlet port. When the teeth pass the end of the spacer the pressurized fluid is released into the outlet port.

The fluid emerging from the outlet port is passed through the fluid pressure control valve. At high operating speeds the pressure control valve maintains the output pressure to the gearbox at a predetermined maximum level. Excess fluid is relieved from the pressure control valve and is directed, via the main pressure valve in the valve block, back to the pump inlet port. This provides a pressurized feed to the pump inlet which prevents cavitation and reduces pump noise.

MECHATRONIC VALVE BLOCK

The Mechatronic valve block is located in the bottom of the transmission and is covered by the fluid pan. The valve block houses the TCM, electrical actuators, speed sensors and control valves which provide all electro-hydraulic control for all transmission functions. The Mechatronic valve block comprises the following components:

- TCM
- Six pressure regulator solenoids
- One shift control solenoid
- One damper
- Twenty one hydraulic spool valves
- Manually operated selector valve
- Temperature sensor
- Turbine speed sensor
- Output shaft speed sensor.

Mechatronic Valve Block

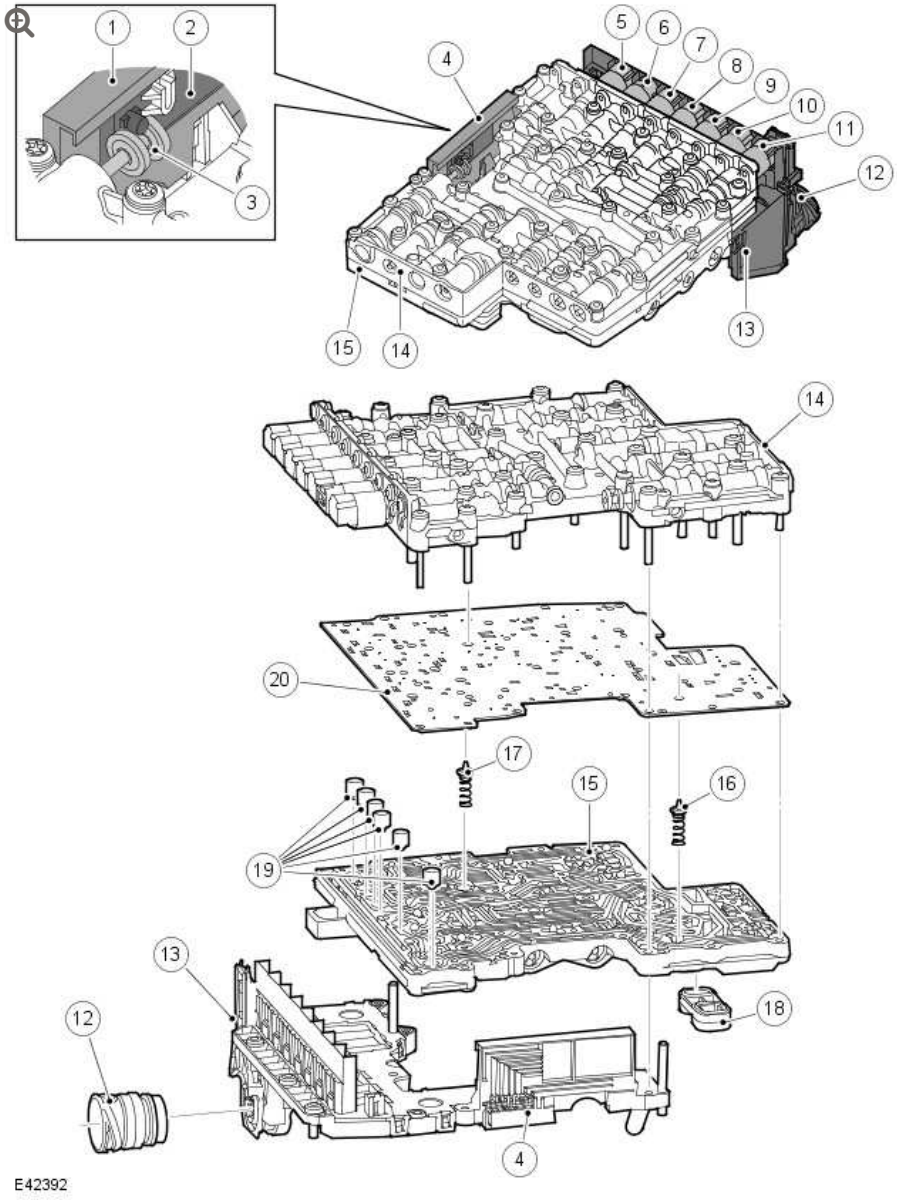

ITEM	DESCRIPTION
1	Position switch
2	Sliding block
3	Selector spool valve
4	Position switch assembly
5	EPRS 6
6	Solenoid Valve 1
7	EPRS 4
8	EPRS 5

ITEM	DESCRIPTION
9	EPRS 3
10	EPRS 2
11	EPRS 1
12	Electrical connector
13	TCM
14	Valve housing
15	Valve plate
16	Torque converter retaining valve
17	Clutch return valve
18	Element seal
19	Pressure regulator dampers
20	Intermediate plate

Valve Housing Components

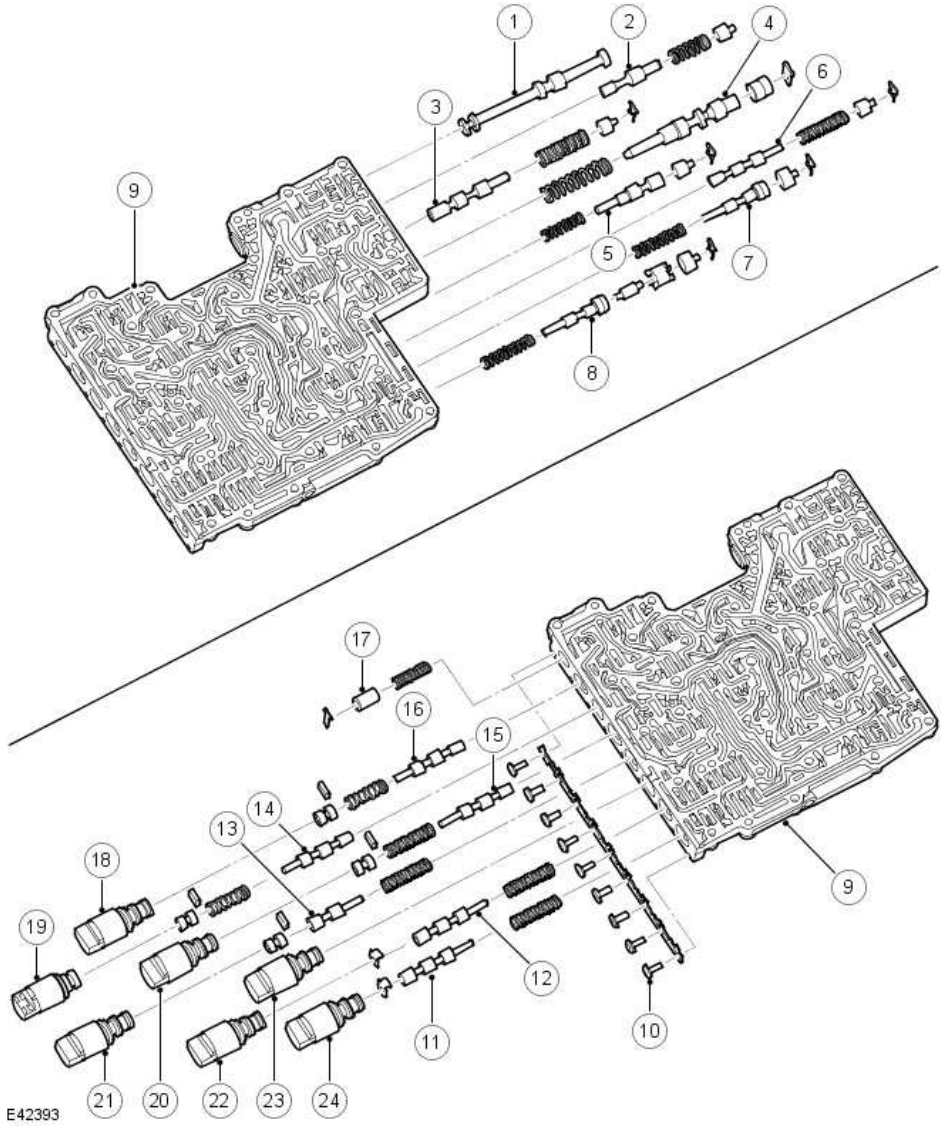

ITEM	DESCRIPTION
1	Selector spool valve
2	Lubricating valve
3	Torque converter pressure valve
4	System pressure valve
5	Torque converter clutch valve
6	Retaining valve – Clutch E
7	Clutch valve E
8	Clutch valve A

ITEM	DESCRIPTION
9	Valve housing
10	Bolts
11	Retaining valve – Clutch A
12	Retaining valve – Clutch B
13	Pressure reducing valve
14	Shift valve 1
15	Retaining valve – Brake D
16	Shift valve 2
17	Damper
18	EPRS 6
19	Solenoid valve 1
20	EPRS 4
21	EPRS 5
22	EPRS 2
23	EPRS 3
24	EPRS 1

Valve Plate Components

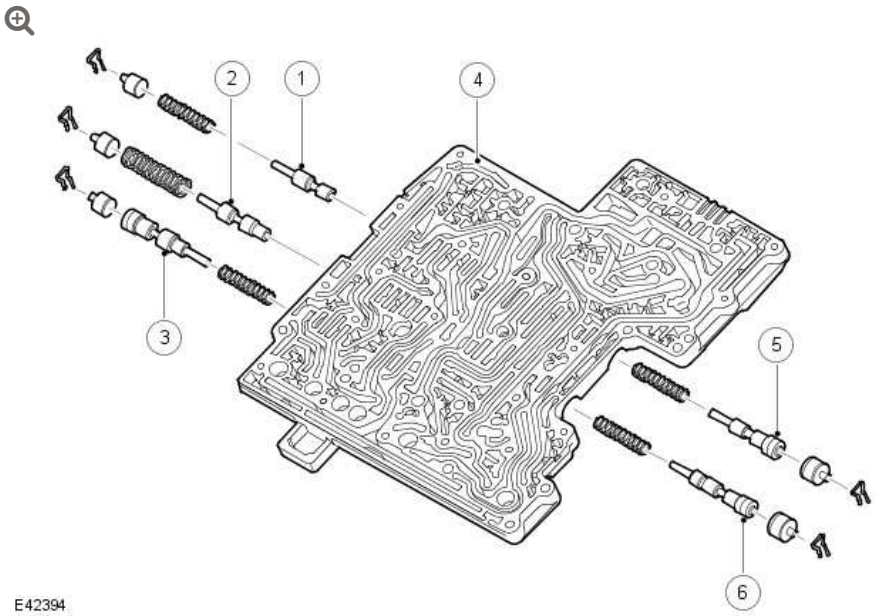

ITEM	DESCRIPTION
1	Retaining valve – Brake D2
2	Clutch valve – Brake D2
3	Clutch valve B
4	Valve plate
5	Clutch valve – Brake D1
6	Clutch valve – Brake C

ELECTRONIC PRESSURE REGULATOR SOLENOIDS

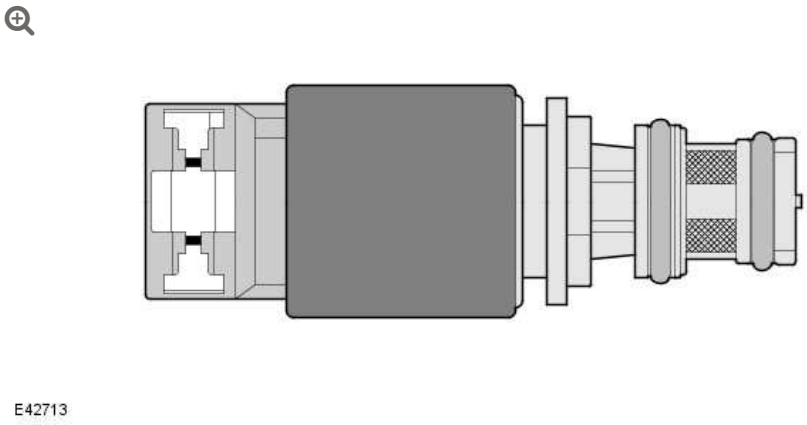

Six EPRS are located in the valve block. The solenoids are controlled by PWM signals from the TCM. The solenoids convert the electrical

signals into hydraulic control pressure proportional to the signal to actuate the spool valves for precise transmission operation.

The following table shows EPRS and their associated functions:

EPRS	FUNCTION
1	Clutch A
2	Clutch B
3	Clutch C
4	Brake clutches D and E
5	System pressure control
6	Torque converter lock-up control

Solenoids EPRS 1, 3 and 6 supply a lower control pressure as the signal amperage increases and can be identified by a black connector cap. The TCM operates the solenoids using PWM signals. The TCM monitors engine load and clutch slip and varies the solenoid duty cycle accordingly. The solenoids have a 12 V operating voltage and a pressure range of 0 - 4.6 bar (0 - 67 $lbf.in^2$).

Solenoids EPRS 2, 4 and 5 supply a higher control pressure as the signal amperage increases and can be identified by a green connector cap. The solenoids are normally open, regulating flow solenoid valves. The operates the solenoids using a PWM earth proportional to the required increasing or decreasing clutch pressures. The solenoids have a 12 V operating voltage and a pressure range of 4.6 - 0 bar (67 - 0 $lbf.in^2$).

The resistance of the solenoid coil winding for solenoid is between 26 to 30.4 ohms at 20 °C (68 °F).

CONTROL SOLENOID

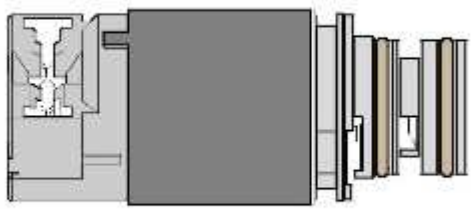

E42714

A shift control SV (solenoid valve) is located in the valve block. The solenoid is controlled by the TCM and converts electrical signals into hydraulic control signals to control clutch application.

The shift control solenoid is an open/closed, on/off solenoid which is controlled by the TCM switching the solenoid to earth. The TCM also supplies power to the solenoid. The TCM energises the solenoid in a programmed sequence for clutch application for gear ratio changes and shift control.

The resistance of the solenoid coil winding for solenoid is between 26 to 30.4 ohms at 20 °C (68 °F).

SENSORS

Speed Sensors

The turbine speed sensor and the output shaft speed sensor are Hall effect type sensors located in the Mechatronic valve block and are not serviceable items. The TCM monitors the signals from each sensor to determine the input (turbine) speed and the output shaft speed.

The turbine speed is monitored by the TCM to calculate the slip of the torque converter clutch and internal clutch slip. This signal allows the TCM to accurately control the slip timing during shifts and adjust clutch application or release pressure for overlap shift control.

The output shaft speed is monitored by theTCM and compared to engine speed signals received on the CAN bus from the ECM. Using a comparison of the two signals the TCM calculates the transmission slip ratio for plausibility and maintains adaptive pressure control.

Temperature Sensor

The temperature sensor is also located in the Mechatronic valve block. The TCM uses the temperature sensor signals to determine the temperature of the transmission fluid. These signals are used by the TCM to control the transmission operation to promote faster warm-up in cold conditions or to assist with fluid cooling by controlling the transmission operation when high fluid temperatures are experienced. If the sensor fails, the TCM will use a default value and a fault code will be stored in the TCM.

Damper

There is 1 damper located in the valve housing. The damper is used to regulate and dampen the regulated pressure supplied via EPRS 5. The damper is load dependent through modulation of the damper against return spring pressure.

The damper comprises a piston, a housing bore and a spring. The piston is subject to the pressure applied by the spring. The bore has a connecting port to the function to which it applies. Fluid pressure applied to the applicable component (i.e. a clutch) is also subjected to the full area of the piston, which moves against the opposing force applied by the spring. The movement of the piston creates an action similar to a shock absorber, momentarily delaying the build up of pressure in the circuit. This results in a more gradual application of clutches improving shift quality.

Spool Valves

The valve block contains 21 spool valves which control various functions of the transmission. The spool valves are of conventional design and are operated by fluid pressure.

Each spool valve is located in its spool bore and held in a default (unpressurized) position by a spring. The spool bore has a number of ports which allow fluid to flow to other valves and clutches to enable transmission operation. Each spool has a piston which is waisted to allow fluid to be diverted into the applicable ports when the valve is operated.

When fluid pressure moves a spool, 1 or more ports in the spool bore are covered or uncovered. Fluid is prevented from flowing or is allowed to flow around the applicable waisted area of the spool and into another uncovered port. The fluid is either passed through galleries to actuate another spool, operate a clutch or is returned to the fluid pan.

DRIVE CLUTCHES

Multiplate Drive or Brake Clutch – Typical

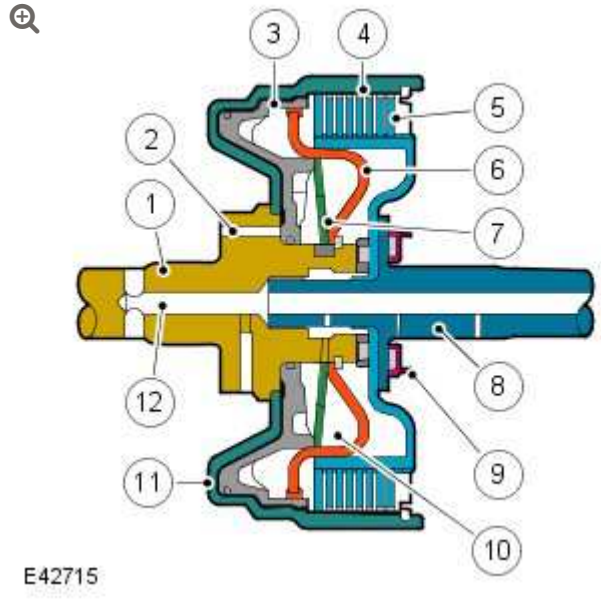

ITEM	DESCRIPTION

ITEM	DESCRIPTION
1	Input shaft
2	Main pressure supply port
3	Piston
4	Cylinder – external plate carrier
5	Clutch plate assembly
6	Baffle plate
7	Diaphragm spring
8	Output shaft
9	Bearing
10	Dynamic pressure equalization chamber
11	Piston chamber
12	Lubrication channel

There are three drive clutches and two brake clutches used in the ZF 6HP28 transmission. Each clutch comprises one or more friction plates dependent on the output controlled. A typical clutch consists of a number of steel outer plates and inner plates with friction material bonded to each face.

On SC models, the uprated transmission includes additional clutch plates to enable the transmission to manage the additional power output of the SC engine.

The clutch plates are held apart mechanically by a diaphragm spring and hydraulically by dynamic pressure. The pressure is derived from a lubrication channel which supplies fluid to the bearings etc. The fluid is passed via a drilling in the output shaft into the chamber between the baffle plate and the piston. To prevent inadvertent clutch application due to pressure build up produced by centrifugal force, the fluid in the dynamic pressure equalization chamber overcomes

any pressure in the piston chamber and holds the piston off the clutch plate assembly.

When clutch application is required, main pressure from the fluid pump is applied to the piston chamber from the supply port. This main pressure overcomes the low pressure fluid present in the dynamic pressure equalization chamber. The piston moves, against the pressure applied by the diaphragm spring, and compresses the clutch plate assembly. When the main pressure falls, the diaphragm spring pushes the piston away from the clutch plate assembly, disengaging the clutch.

PLANETARY GEAR TRAINS

The planetary gear trains used on the ZF 6HP28 transmission comprise a single web planetary gear train and a double web planetary gear train. These gear trains are known as Lepelletier type gear trains and together produce the six forward gears and the one reverse gear.

SINGLE WEB PLANETARY GEAR TRAIN

The single web planetary gear train comprises:

- Sunwheel
- Four planetary gears
- Planetary gear carrier (spider)
- Ring gear or annulus.

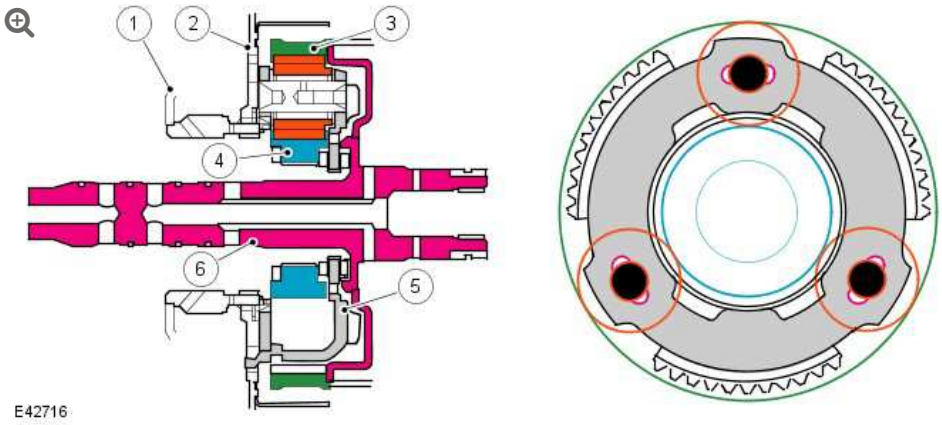

ITEM	DESCRIPTION
1	Cylinder
2	Baffle plate
3	Ring gear
4	Sun gear
5	Planetary gear spider
6	Torque converter input shaft

Torque Converter Input Shaft

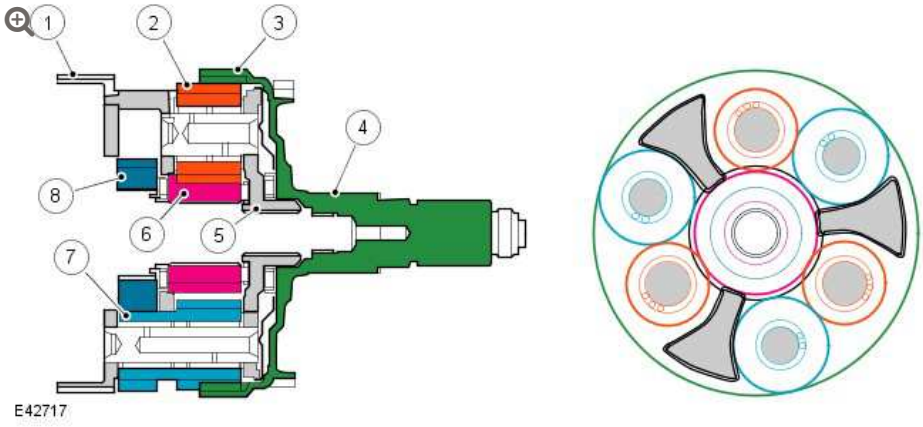

ITEM	DESCRIPTION
1	Planetary gear spider
2	Planetary gears (short)
3	Ring gear

ITEM	DESCRIPTION
4	Output shaft
5	Planetary gear carrier
6	Sunwheel
7	Double planetary gears (long)
8	Sunwheel

The double planetary gear train comprises:

- Two sunwheels
- Three short planetary gears
- Three long planetary gears
- Planetary gear carrier
- Ring gear or annulus

TRANSMISSION CONTROL MODULE

The TCM is an integral part of the Mechatronic valve block which is located at the bottom of the transmission, within the fluid pan. The TCM is the main controlling component of the transmission.

The TCM processes signals from the transmission speed and temperature sensors, ECM and other vehicle systems. From the received signal inputs and pre-programmed data, the module calculates the correct gear, torque converter clutch setting and optimum pressure settings for gear shift and lock-up clutch control.

CONTROL DIAGRAM

NOTE:

A = Hardwired; B = K bus; D = High speed CAN bus.

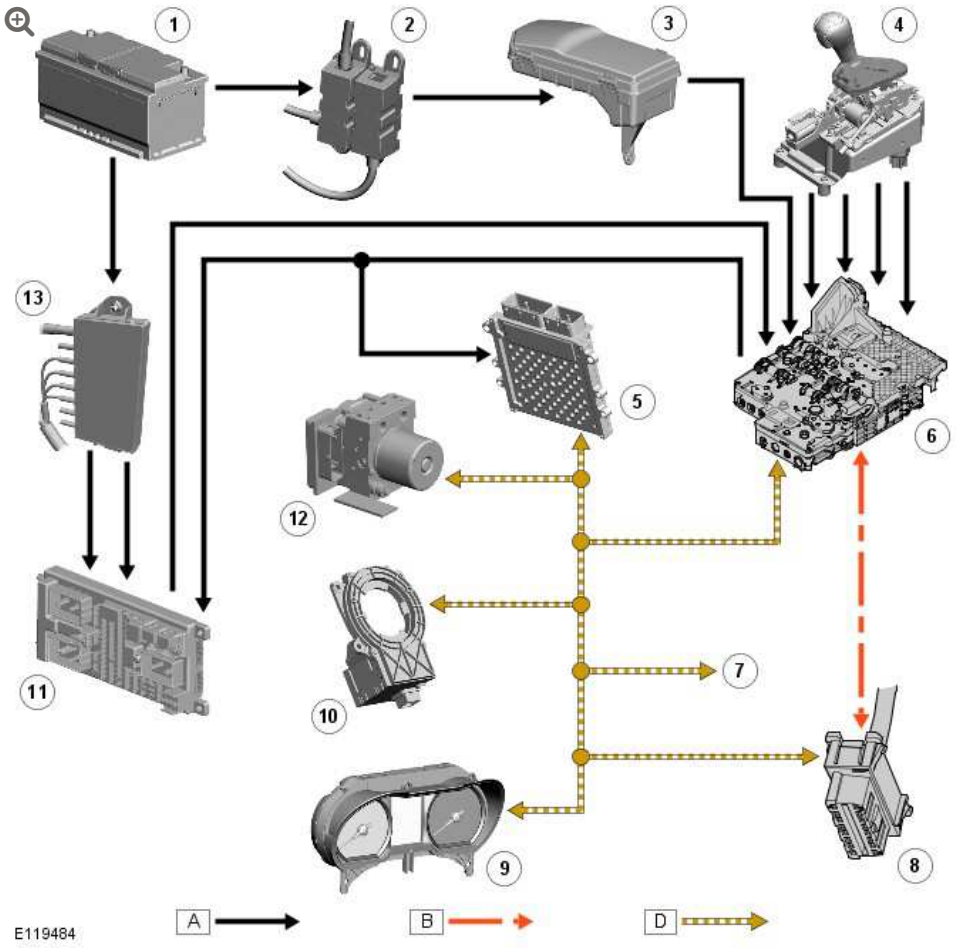

ITEM	DESCRIPTION
1	Battery
2	BJB (battery junction box) 2 (175 A megafuse)
3	CJB (central junction box)
4	Selector lever
5	ECM (engine control module)
6	TCM
7	To other systems
8	Diagnostic socket

ITEM	DESCRIPTION
9	Instrument cluster
10	Steering angle sensor
11	CJB (central junction box)
12	ABS module
13	BJB

OPERATION

POWER FLOWS

Operation of the transmission is controlled by the TCM, which electrically activates various solenoids to control the transmission gear selection. The sequence of solenoid activation is based on programmed information in the TCM memory and physical transmission operating conditions such as vehicle speed, throttle position, engine load and selector lever position.

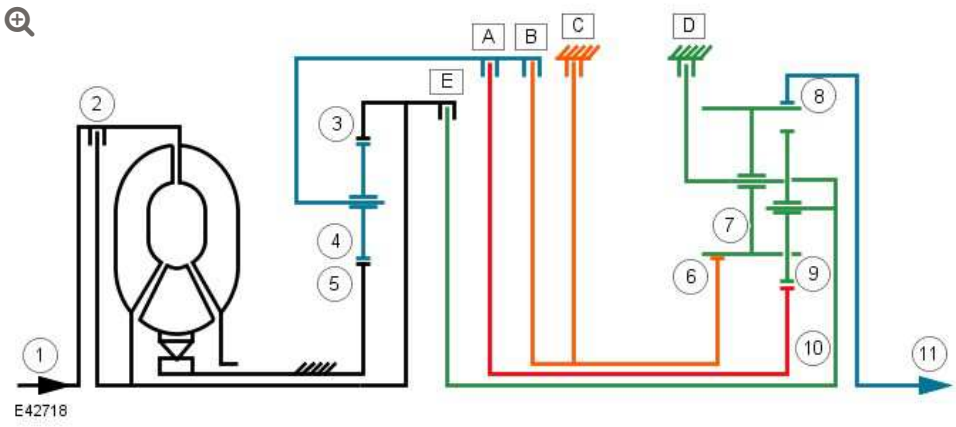

ITEM	DESCRIPTION
1	Torque input from engine
2	Torque converter lock-up clutch
3	Single web planetary gear carrier
4	Single web planetary gears

ITEM	DESCRIPTION
5	Single web sunwheel 1
6	Double web sunwheel 2
7	Double web planetary gears - long
8	Double web planetary gear carrier
9	Double web planetary gears - short
10	Double web sunwheel 3
11	Torque output from transmission
A	Multiplate clutch
B	Multiplate clutch
C	Multiplate brake
D	Multiplate brake
E	Multiplate clutch

Engine torque is transferred, via operation of single or combinations of clutches to the 2 planetary gear trains. Both gear trains are controlled by reactionary inputs from brake clutches to produce the 6 forward gears and 1 reverse gear. The ratios are as follows:

GEAR	1ST	2ND	3RD	4TH	5TH	6TH	REVERSE
Ratio	4.171	2.340	1.521	1.143	0.867	0.691	3.403

Shift Elements

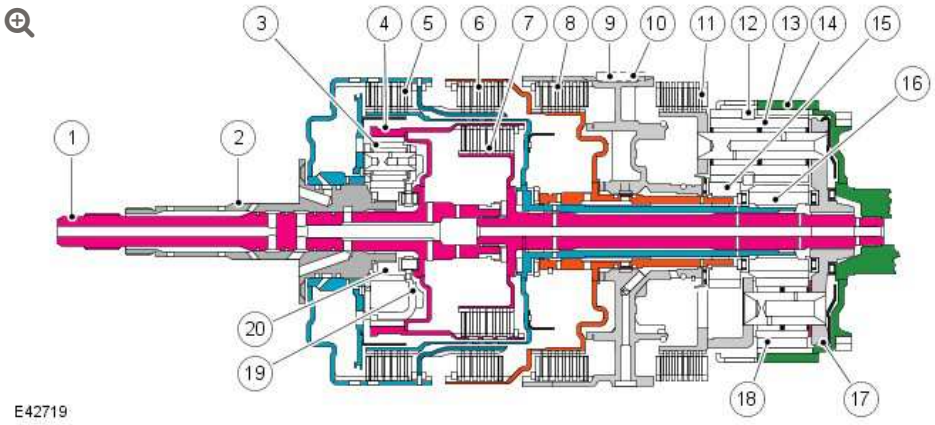

ITEM	DESCRIPTION
1	Turbine shaft
2	Stator shaft
3	Single web planetary gear train
4	Ring gear 1
5	Clutch A
6	Clutch B
7	Clutch E
8	Brake clutch C
9	Fixed connection to transmission housing
10	Shaft key
11	Brake clutch D
12	Double web planetary gear train
13	Planetary gears - long
14	Ring gear 2
15	Sunwheel 2
16	Sunwheel 3
17	Double web planetary gear carrier
18	Planetary gears - short
19	Single web planetary gear carrier

ITEM	DESCRIPTION
20	Sunwheel 1

The shift elements are three rotating multiplate clutches (A, B and E) and two fixed multiplate brakes © and D). All shifts from 1st to 6th gears are power-on overlapping shifts. Overlapping shifts can be described as one of the clutches continuing to transmit drive at a lower main pressure until the next required clutch is able to accept the input torque.

The shift elements, clutches and brakes are actuated hydraulically. Fluid pressure is applied to the required clutch and/or brake, pressing the plates together and allowing drive to be transmitted through the plates. The purpose of the shift elements is to perform power-on shifts with no interruption to traction and smooth transition between gear ratios.

Power Flow 1st Gear

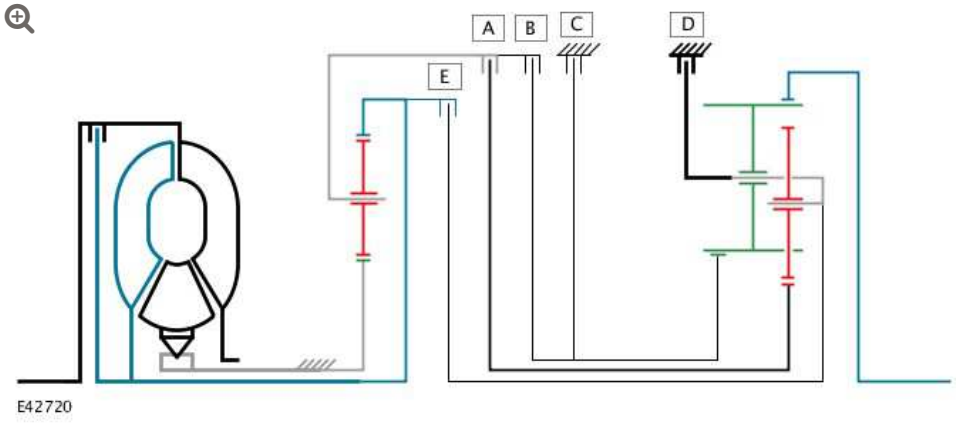

The selector lever and the selector valve spool are in the 'D' position. Engine torque is transmitted from the torque converter turbine shaft to the ring gear 1 of the single web planetary gear train and the outer plate carrier of clutch 'E'.

Ring gear 1 drives the planetary gears which rotate around sunwheel 1. This drives the planetary gear carrier 1 and also the outer plate carrier of clutch 'A' and the inner plate carrier of clutch 'B'.

When clutch 'A' is engaged, sunwheel 3 in the double web planetary gear train is driven and meshes with the short planetary gears.

The double web planetary gear train is locked against the transmission housing by brake 'D'. This allows ring gear 2 (output shaft) to be driven in the same direction as the engine via the long planetary gears.

NOTE:

Refer to 'Shift Elements' illustration for key

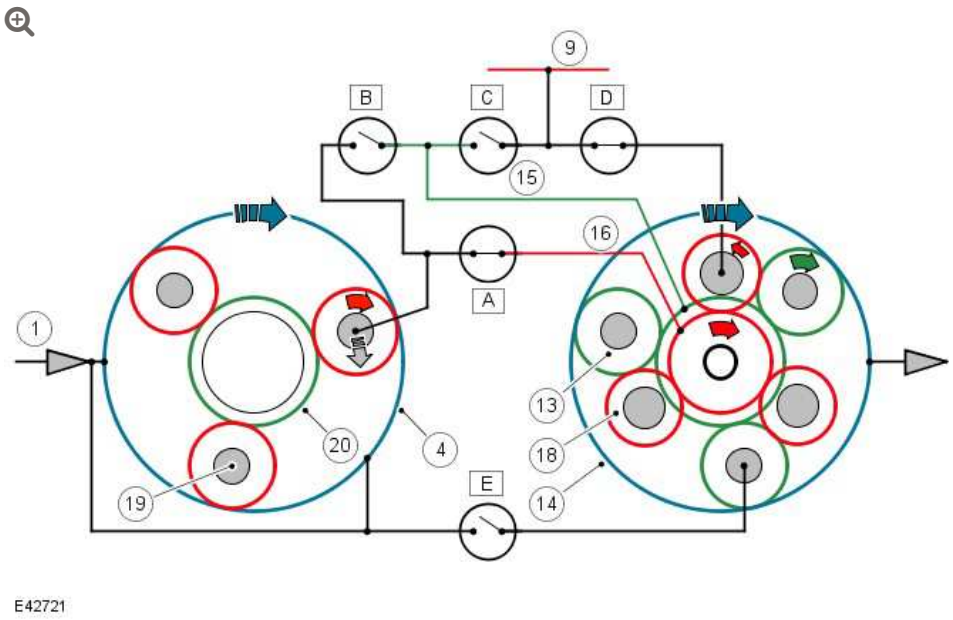

Power Flow 2nd Gear

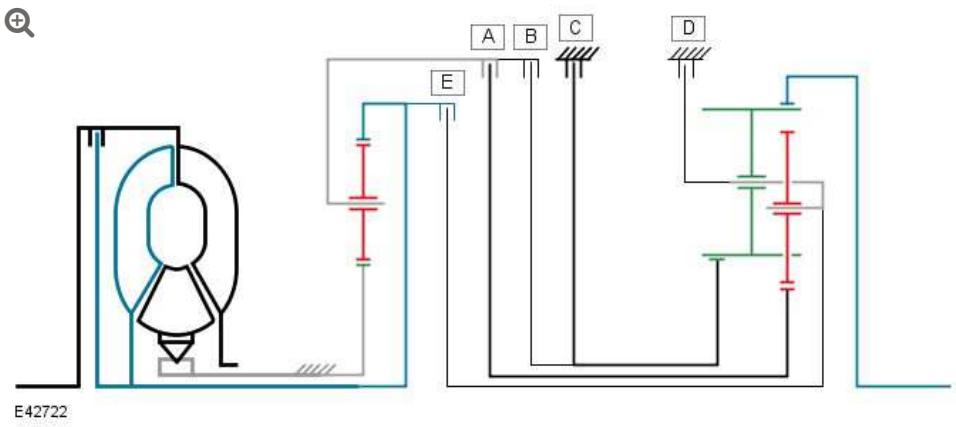

The selector lever and the selector spool valve are in the 'D' position. Engine torque is transmitted from the torque converter turbine shaft to the ring gear 1 of the single web planetary gear train and the outer plate carrier of clutch 'E'.

Ring gear 1 drives the planetary gears which rotate around sunwheel 1. This drives the planetary gear carrier 1 and also the outer plate carrier of clutch 'A' and the inner plate carrier of clutch 'B'.

When clutch 'A' is engaged, sunwheel 3 in the double web planetary gear train is driven and meshes with the short planetary gears.

Sunwheel 2 is locked to the transmission housing by brake clutch 'C'. The long planetary gears, which are also meshed with the short planetary gears, roll around the fixed sunwheel 2 and transmit drive to the double web planetary gear train carrier and ring gear 2 in the direction of engine rotation.

NOTE:

Refer to 'Shift Elements' illustration for key

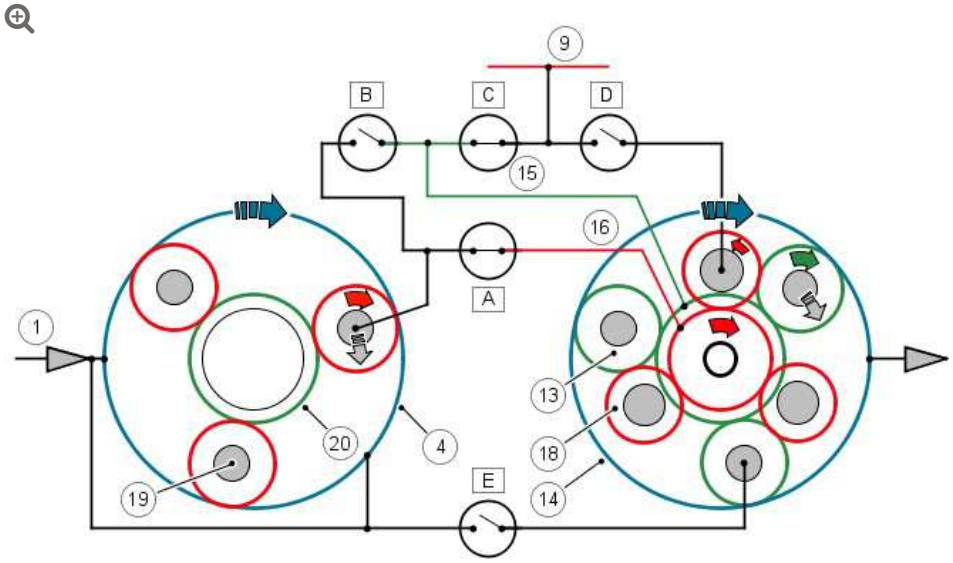

Power Flow 3rd Gear

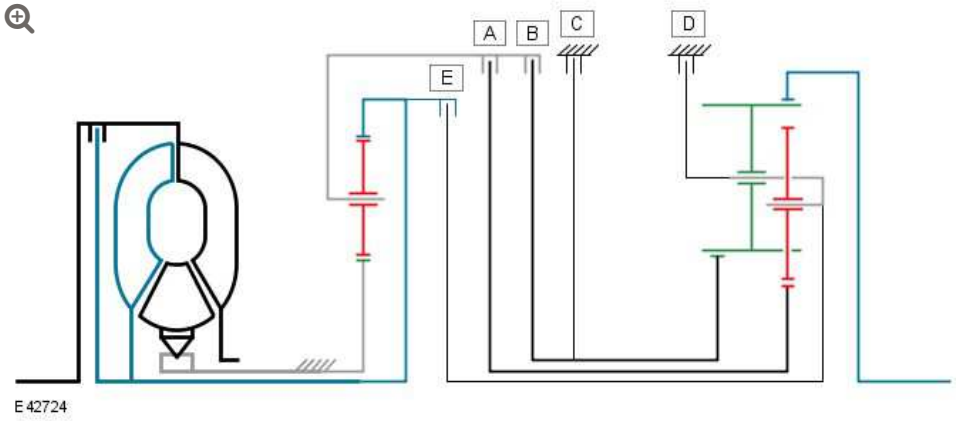

The selector lever and the selector spool valve are in the 'D' position. Engine torque is transmitted from the torque converter turbine shaft to the ring gear 1 of the single web planetary gear train and the outer plate carrier of clutch 'E'.

Ring gear 1 drives the planetary gears which rotate around sunwheel 1. This drives the planetary gear carrier 1 and also the outer plate carrier of clutch 'A' and the inner plate carrier of clutch 'B'.

When clutch 'A' is engaged, sunwheel 3 in the double web planetary gear train is driven and meshes with the short planetary gears.

Sunwheel 2 is driven via clutch 'B' which is engaged. The long planetary gears, which are also meshed with the short planetary gears, cannot roll around the fixed sunwheel 2 and therefore transmit drive to the locked double web planetary gear train carrier in the direction of engine rotation.

NOTE:

Refer to 'Shift Elements' illustration for key

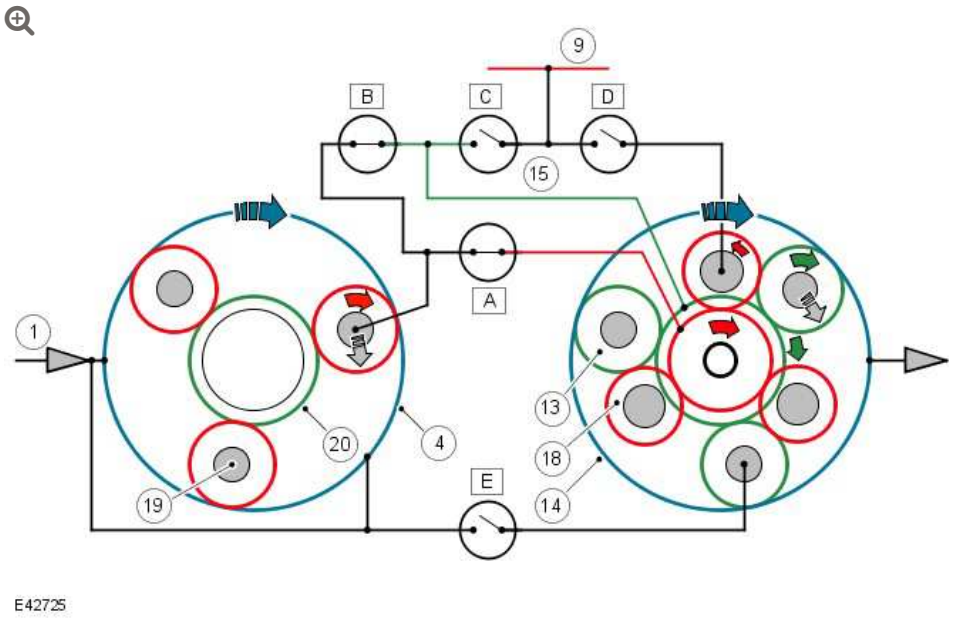

E42725

Power Flow 4th Gear

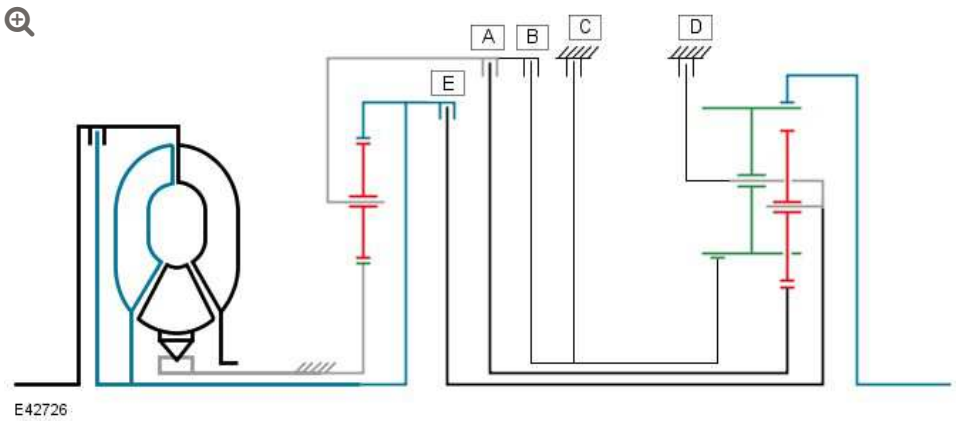

E42726

The selector lever and the selector spool valve are in the 'D' position. Engine torque is transmitted from the torque converter turbine shaft to ring gear 1 of the single web planetary gear train and the outer plate carrier of clutch 'E'.

Ring gear 1 drives the planetary gears which rotate around sunwheel 1. This drives the planetary gear carrier 1 and also the outer plate carrier of clutch 'A' and the inner plate carrier of clutch 'B'.

When clutch 'A' is engaged, sunwheel 3 in the double web planetary gear train is driven and meshes with the short planetary gears.

The double web planetary gear carrier is driven via clutch 'E' which is engaged. The long planetary gears, which are also meshed with the short planetary gears and the double web planetary gear carrier, drive ring gear 2 in the direction of engine rotation.

NOTE:

Refer to 'Shift Elements' illustration for key

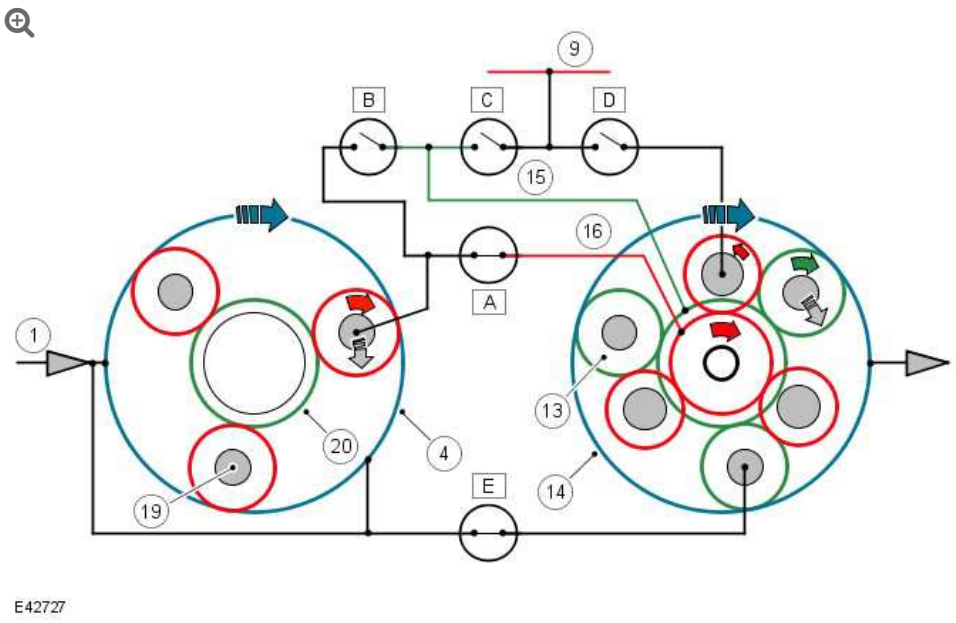

E42727

Power Flow 5th Gear

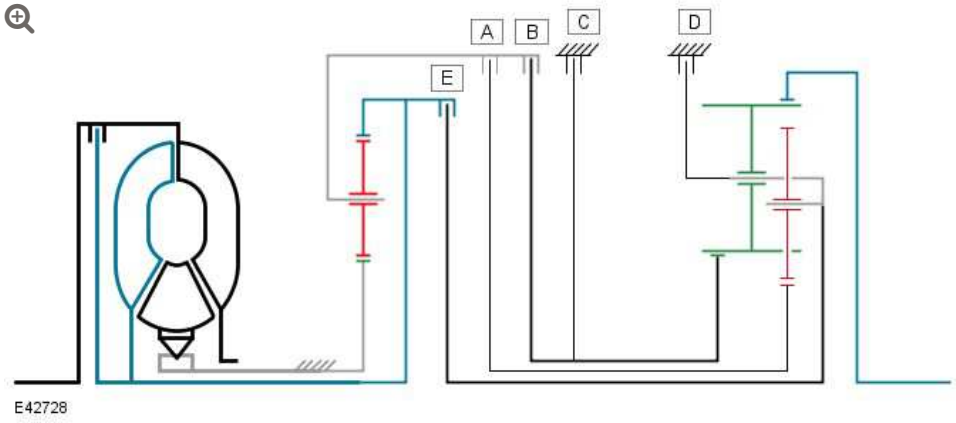

The selector lever and the selector spool valve are in the 'D' position. Engine torque is transmitted from the torque converter turbine shaft to ring gear 1 of the single web planetary gear train and the outer plate carrier of clutch 'E'.

Ring gear 1 drives the planetary gears which rotate around sunwheel 1. This drives the planetary gear carrier 1 and also the outer plate carrier of clutch 'A' and the inner plate carrier of clutch 'B'.

When clutch 'A' is engaged, sunwheel 3 in the double web planetary gear train is driven and meshes with the short planetary gears.

The long planetary gears, which are also meshed with the short planetary gears and the double web planetary gear carrier, drive ring gear 2 in the direction of engine rotation.

NOTE:

Refer to 'Shift Elements' illustration for key

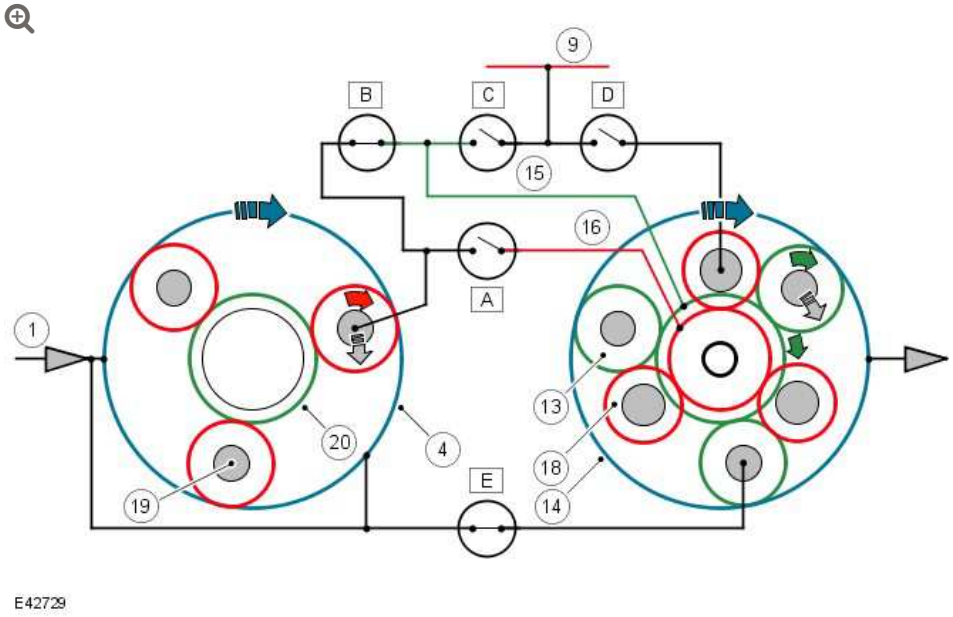

Power Flow 6th Gear

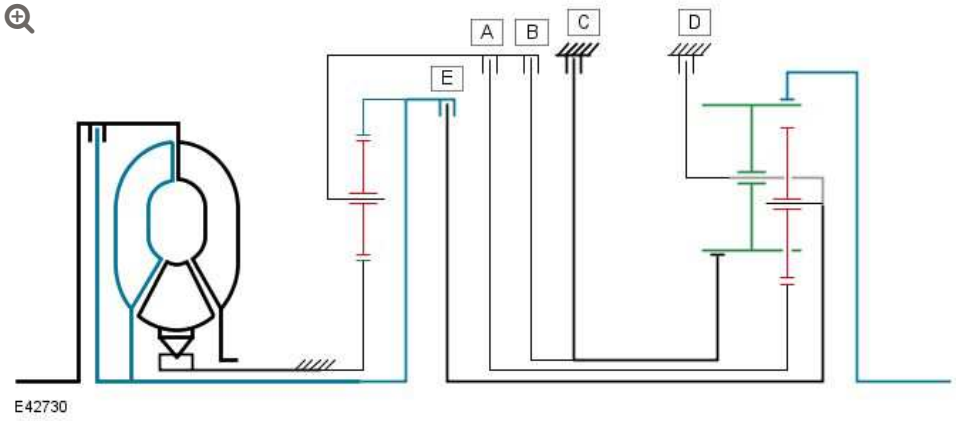

The selector lever and the selector spool valve are in the 'D' position. Engine torque is transmitted from the torque converter turbine shaft to ring gear 1 of the single web planetary gear train and the outer plate carrier of clutch 'E'.

Clutches 'A' and 'B' are released, removing the effect of the single web planetary gear train.

Clutch brake 'C' is applied which locks sunwheel 2 to the transmission housing.

Clutch 'E' is engaged and drives the double web planetary gear carrier. This causes the long planetary gears to rotate around the fixed sunwheel 2 and transmit drive to ring gear 2 which is driven in the direction of engine rotation.

NOTE:

Refer to 'Shift Elements' illustration for key

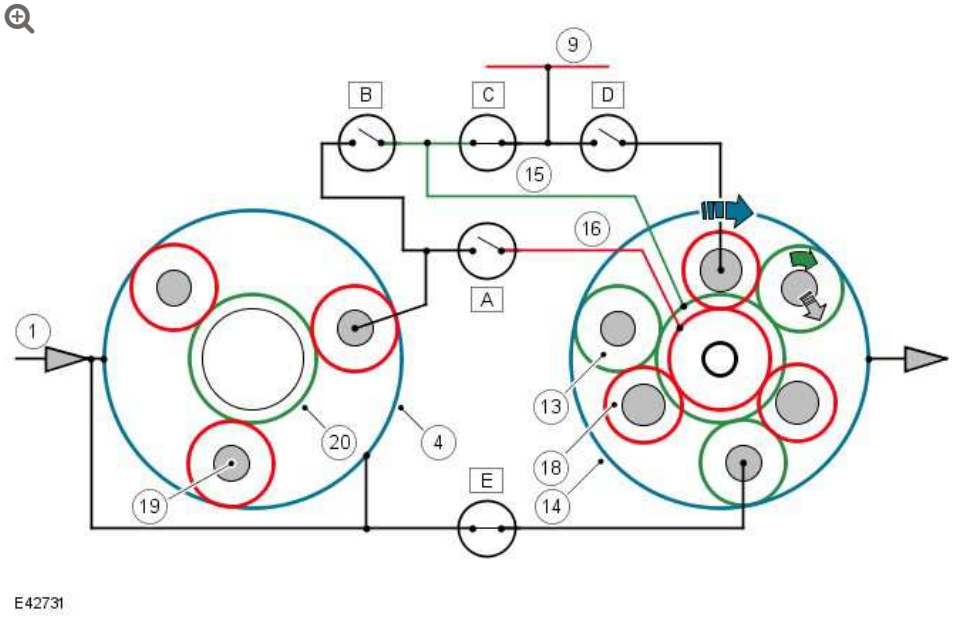

E42731

Power Flow Reverse Gear

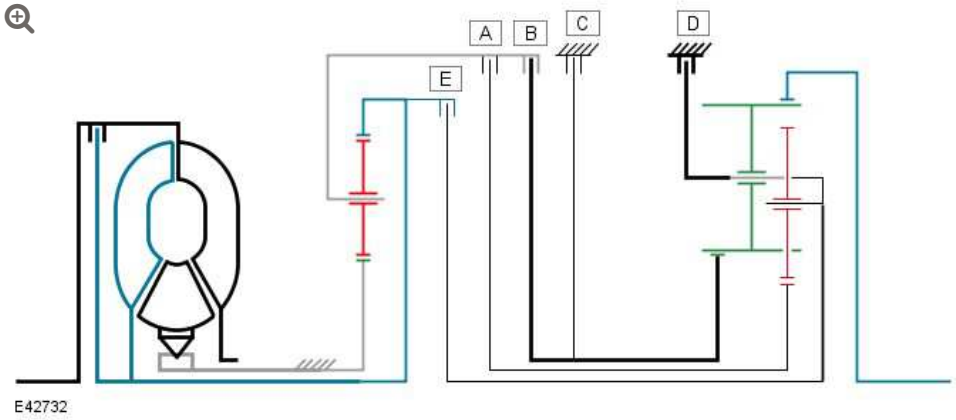

E42732

The selector lever and the selector spool valve are in the 'R' position. Engine torque is transmitted from the torque converter turbine shaft to ring gear 1 of the single web planetary gear train and the outer plate carrier of clutch 'E'.

Ring gear 1 drives the planetary gears of the single web planetary gear train which rotate around the fixed sunwheel 1. This transmits the drive to the single web planetary gear carrier, the outer plate carrier of clutch 'A' and the inner plate carrier of clutch 'B'.

With clutch 'B' applied, sunwheel 2 in the double web planetary gear train is driven and meshes with the long planetary gears.

The double web planetary gear carrier is locked to the transmission housing by brake clutch 'D'. This allows ring gear 2 to be driven in the opposite direction to engine rotation by the long planetary gears.

NOTE:

Refer to 'Shift Elements' illustration for key

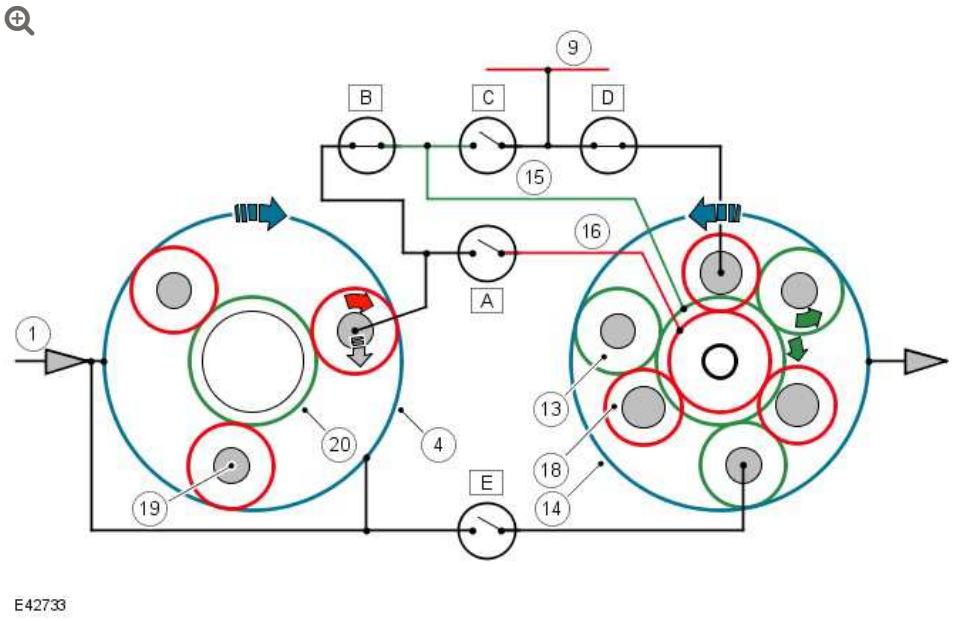

INSTRUMENT CLUSTER

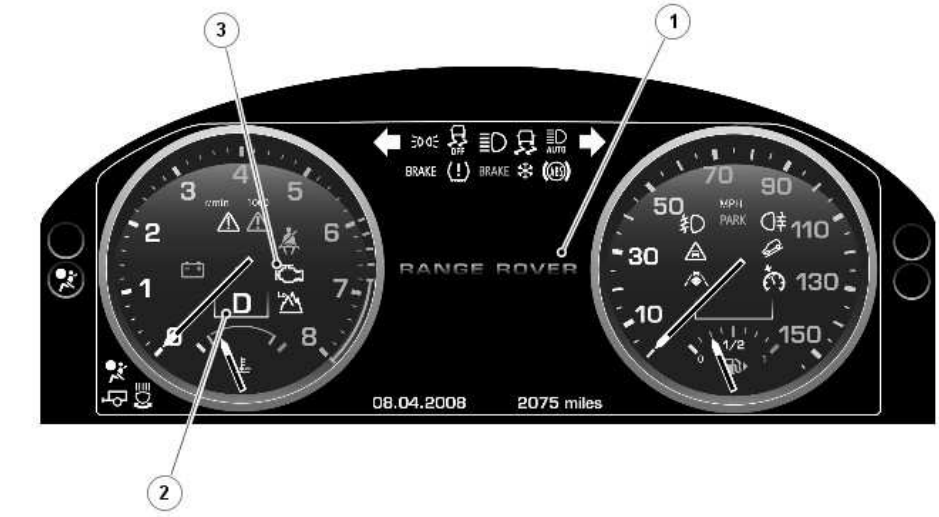

ITEM	DESCRIPTION
1	Message center
2	Transmission status display
3	MIL (malfunction indicator lamp)

The instrument cluster is connected to the TCM via the high speed CAN bus. Transmission status is transmitted by the TCM and displayed to the driver in one of two displays in the instrument cluster.
For additional information, refer to: Instrument Cluster (413-01, Description and Operation).

Malfunction Indicator Lamp

The MIL (malfunction indicator lamp) is located in the tachometer of the instrument cluster. Transmission related faults which may affect the vehicle emissions will illuminate the MIL.

The MIL is illuminated by the ECM on receipt of a relevant fault message from the TCM on the high speed CAN. The nature of the

fault can be diagnosed using Land Rover approved diagnostic equipment which reads the fault codes stored in the TCM memory.

Transmission Status Display

The transmission status display is located in the tachometer of the instrument cluster. The display shows the selector lever position or the selected gear when in manual and sport modes.

The following table shows the displays and their descriptions.

SYMBOL	DESCRIPTION
P	Park selected
R	Reverse selected
N	Neutral selected
D	Drive selected
s*	Sport mode selected (* = current gear)
1	1st gear selected (manual CommandShift mode)
2	2nd gear selected (manual CommandShift mode)
3	3rd gear selected (manual CommandShift mode)
4	4th gear selected (manual CommandShift mode)
5	5th gear selected (manual CommandShift mode)
6	6th gear selected (manual CommandShift mode)

Message Center

The message center is located in the center of the instrument cluster. The message center is a LCD (liquid crystal display) that relays vehicle status and operating information to the driver and can display messages relating to a number of vehicle systems. If a transmission fault occurs, the message GEARBOX FAULT is displayed in the message center.

For additional information, refer to: Information and Message Center (413-08, Description and Operation).

TRANSMISSION CONTROL MODULE

The TCM outputs signals to control the shift control solenoid valve and the EPRS to control the hydraulic operation of the transmission.

The TCM processes signals from the transmission speed and temperature sensors, the selector lever, the ECM and other vehicle systems. From the received signal inputs and pre-programmed data, the TCM calculates the correct gear, torque converter clutch setting and optimum pressure settings for gear shift and lock-up clutch control.

The ECM supplies the engine management data over the high speed CAN bus. The TCM requires engine data to efficiently control the transmission operation, for example; flywheel torque, engine speed, accelerator pedal angle, engine temperature. The steering angle sensor and the ABS (anti-lock brake system) module also supply data to the TCM on the high speed CAN bus. The TCM uses data from these systems to suspend gear changes when the vehicle is cornering and/or the ABS module is controlling braking or traction control.

Using the signal inputs and the memorized data, the TCM control program computes the correct gear and torque converter lock-up clutch setting and the optimum pressure settings for gear shift and lock-up clutch control. Special output-side modules (power output stages, current regulator circuits), allow the TCM to control the solenoid valves and pressure regulators and consequently precisely control the hydraulics of the automatic transmission. In addition, the amount and duration of engine interventions are supplied to the engine management by way of the CAN bus.

The TCM determines the position of the selector lever using signals from:

- The selector switch in the transmission.
- The M/S (manual/sport) switch and the park lock switch on the selector lever.

The TCM transmits the position of the selector lever and the selected gear on the high speed CAN bus. This information is shown in the gear selector display in the instrument cluster.

Engine Stall

If the vehicle stalls it will coast down in gear, with the transmission providing drive to the engine. A restart can be attempted at this point and the engine may start and the driver can continue.

If the coast down speed reduces such that the speed of the engine is less than 600 rev/min, the transmission will go to neutral, D illumination will flash in the instrument cluster. The driver needs to select neutral or park and then press the brake pedal to restart the engine.

If the start/stop button is pressed when driving, the message ENGINE STOP BUTTON PRESSED is displayed in the message center but there will be no change to the ignition state. If the driver requires to switch off the engine, the start/stop button must be pressed for a second time. The engine will be stopped and will be back driven by the transmission as the vehicle coasts down.

AUTOMATIC TRANSMISSION/TRANSAXLE – V8 5.0L PETROL/V8 S/C 5.0L PETROL

TRANSMISSION CONTROL MODULE (TCM) AND MAIN CONTROL VALVE BODY

(G1225988)

REMOVAL AND INSTALLATION

44.24.05	GASKET–OIL/FLUID PAN – RENEW	5000 CC, AJ V8	1.5	USED WITHINS	+
44.40.01	VALVE BODY ASSEMBLY – RENEW	5000 CC, AJ V8	1.9	USED WITHINS	+

REMOVAL

NOTES:

- The transmission control module (TCM) is part of the main control valve body and cannot be serviced separately.
- Some variation in the illustrations may occur, but the essential information is always correct.

1. Disconnect the battery ground cable.
   Refer to: Specifications (414-00, Specifications).

2. **WARNING:**

   Make sure to support the vehicle with axle stands.

   Raise and support the vehicle.

3. Refer to: Transmission Fluid Pan, Gasket and Filter (307-01, Removal and Installation).

4. 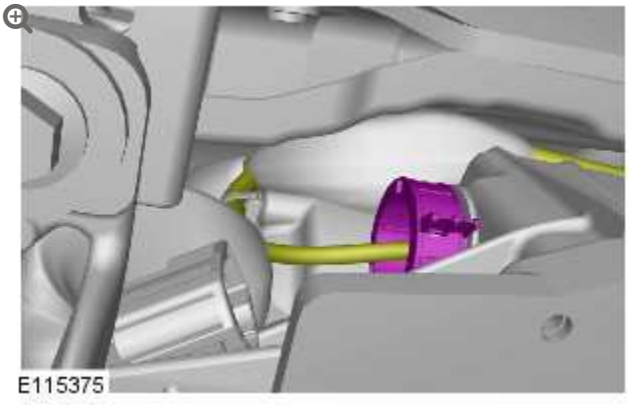

5.

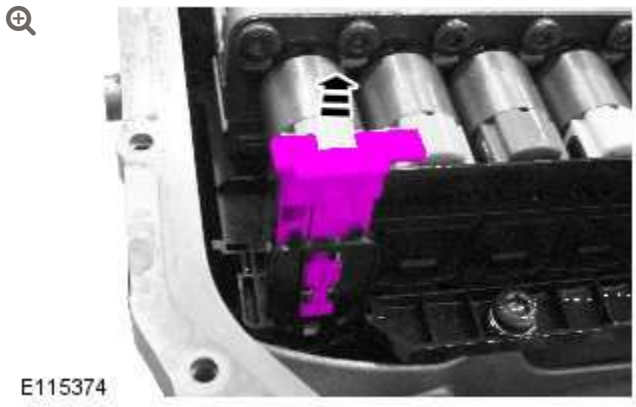

6.

CAUTION:

Discard the component.

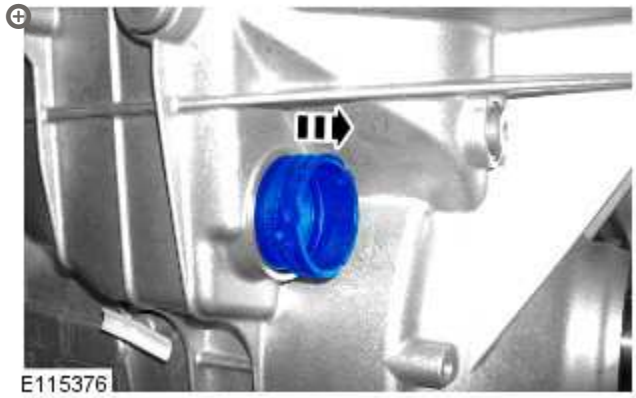

7.

CAUTION:

Be prepared to collect escaping fluids.

NOTE:

Note the position of the manual park brake release.

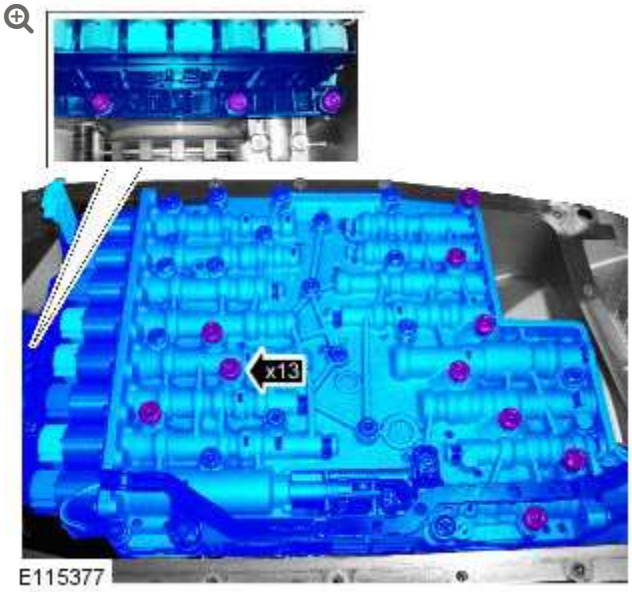

8.

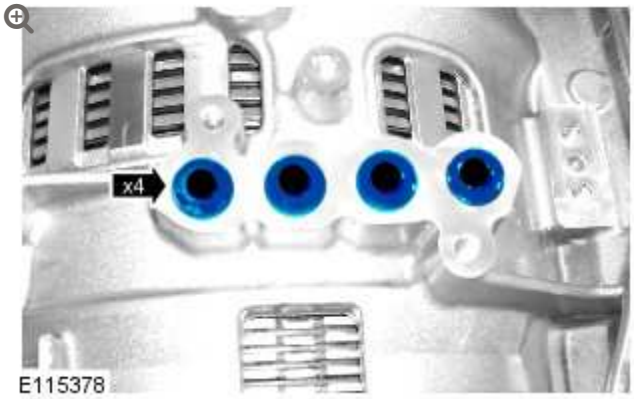

9.



INSTALLATION

1.

CAUTIONS:

- Make sure that when fully fitted, all seals protrude by the same amount.
- Install the new seals.



- Install a new seal block.

2.

CAUTIONS:

- Install the new seals.
- Make sure that when fully fitted, all seals protrude by the same amount.

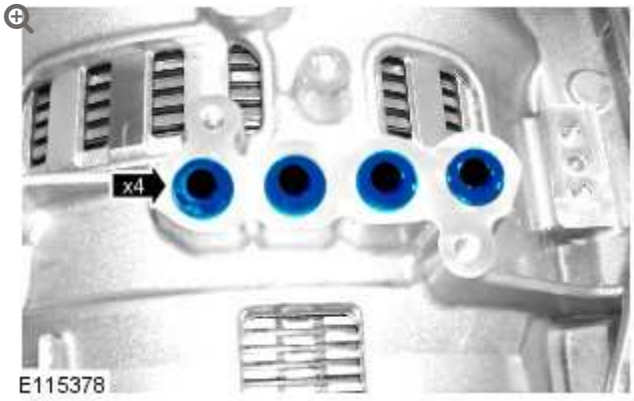

3.

CAUTION:

Make sure the manual park release is correctly engaged.

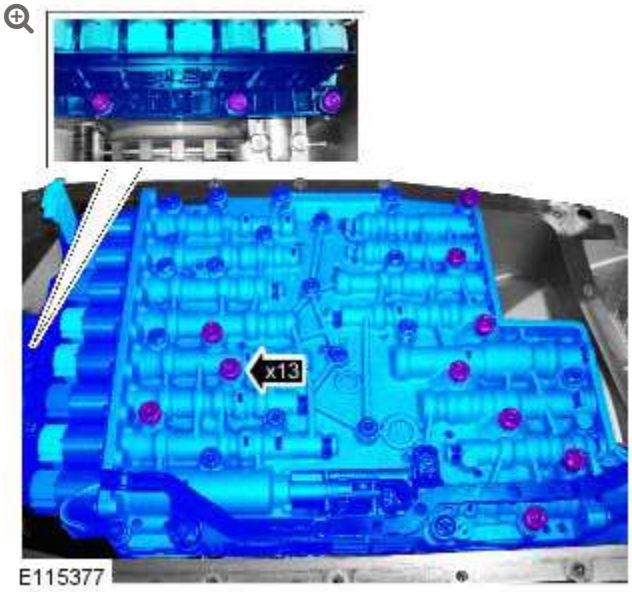

Torque: **8 Nm**

4.

CAUTION:

Make sure that a new component is installed.

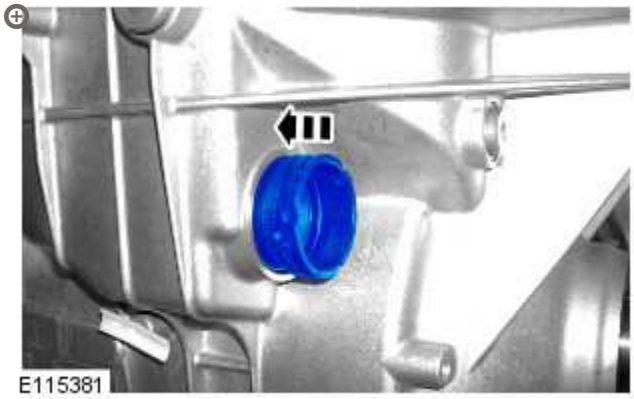

5.

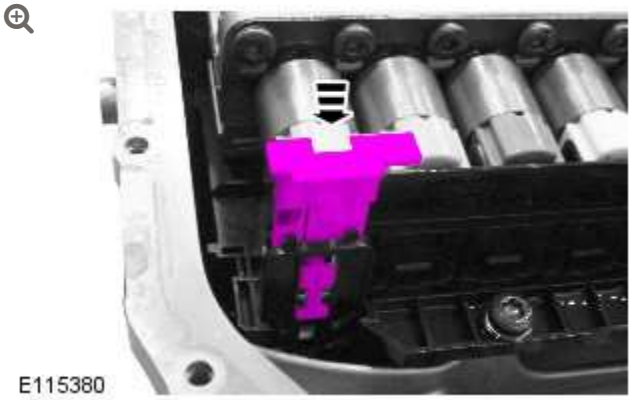

6.

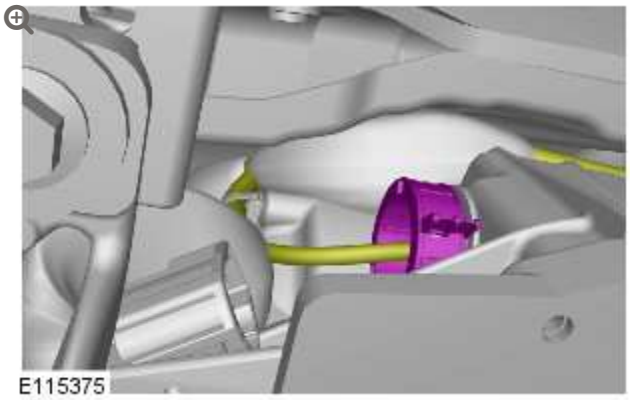

7. Refer to: Transmission Fluid Pan, Gasket and Filter (307-01, Removal and Installation).

8. Connect the battery ground cable.
   Refer to: Specifications (414-00, Specifications).

9. If a new component has been installed, configure using Jaguar approved diagnostic equipment.

AUTOMATIC TRANSMISSION/TRANSAXLE – V8 5.0L PETROL/V8 S/C 5.0L PETROL

TRANSMISSION FLUID DRAIN AND REFILL (G1225339)

GENERAL PROCEDURES

44.24.02	LUBRICATION SYSTEM – DRAIN AND REFILL	5000 CC, AJ V8	0.9	USED WITHINS

SPECIAL TOOL(S)

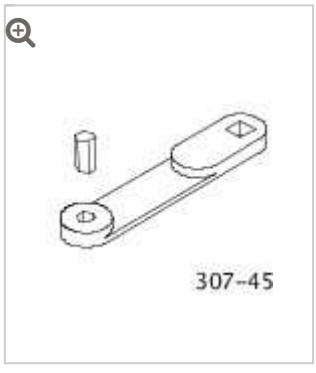

307-452

Wrench, Transmission Filler Plug

WARNINGS:

- Observe due care when draining, as the fluid can be very hot.
- Observe due care when working near a hot exhaust system.

NOTE:

Some variation in the illustrations may occur, but the essential information is always correct.

1. **WARNING:**

   Make sure to support the vehicle with axle stands.

   Raise and support the vehicle.

2. 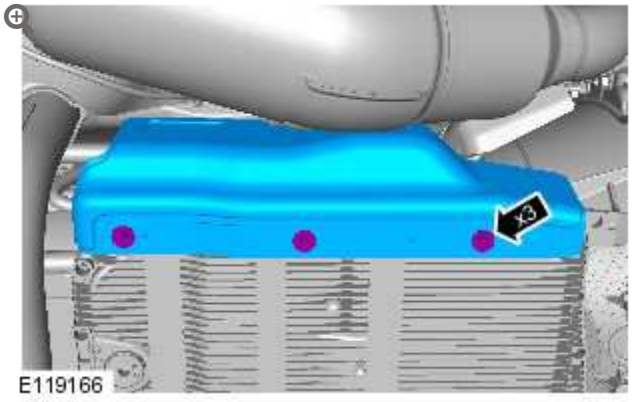

   Torque: **9 Nm**

3. Place a container under the transmission.

4.

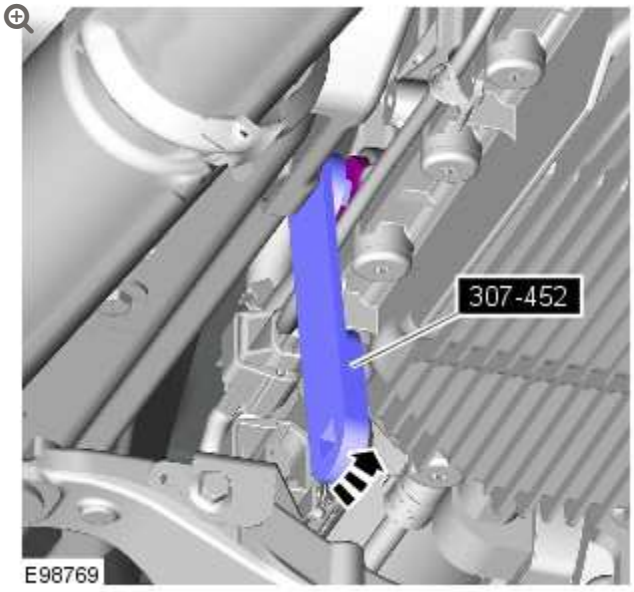

Special Tool(s): 307-452

5.



- Allow the fluid to drain.
- Discard the component.

6.



Torque: **8 Nm**

7.

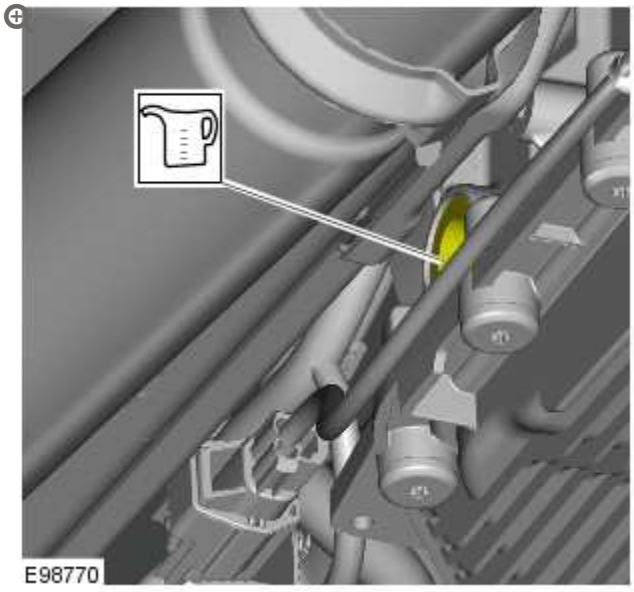

- Refill the transmission with fluid.
- Use transmission fluid meeting Land Rover specification.

8.

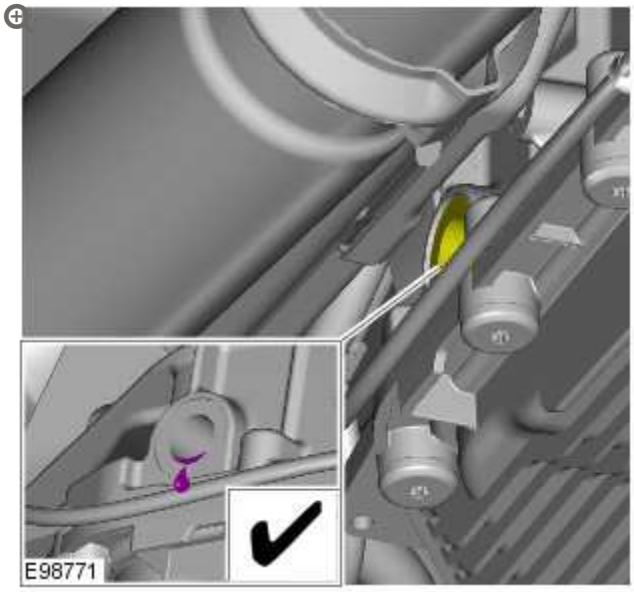

Allow the transmission fluid to drain from the transmission fluid filler plug hole until the flow almost stops.

9. **NOTE:**

Install a new sealing washer.

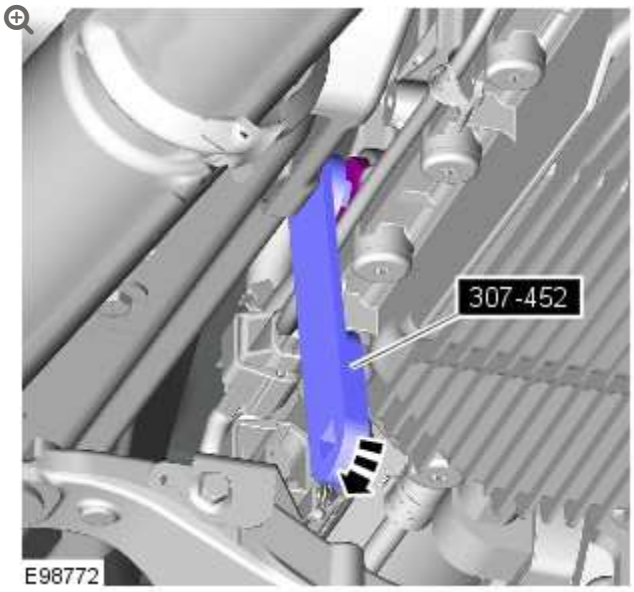

- Loosely install the transmission fluid fill plug.

10.

CAUTION:

Make sure the transmission fluid fill plug is tightened to the correct specification. Failure to follow this instruction may result in damage to the vehicle.

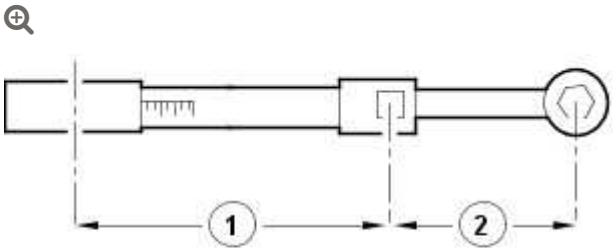

E37107

- To make sure the transmission fill plug is torqued to the correct specification. Using the special tool and torque wrench the following calculation steps must be followed.
- Step 1. Multiply 35 Nm by the effective length of the torque wrench (1).
- Step 2. Add the effective length of the special tool (2) to the effective length of the torque wrench (1).
- Step 3. Divide the total of step 1 by the total of step 2.
- Step 4. Set the torque wrench to the figure arrived at in step 3.
- Tighten the transmission fluid fill plug to the torque given by the calculation.

11. Carry out a transmission fluid level check.
Refer to: Transmission Fluid Level Check (307-01B, General Procedures).

12.

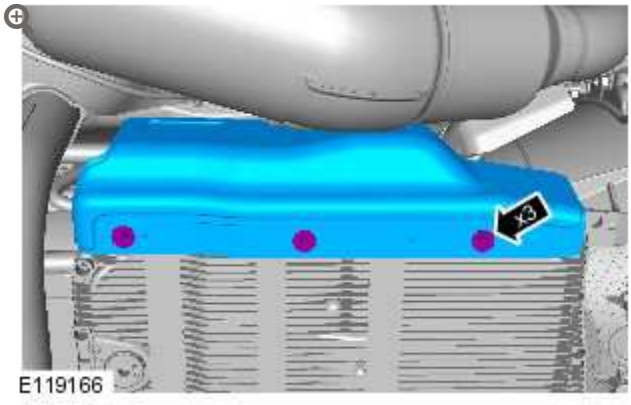

Torque: **9 Nm**

13. Lower the vehicle.

AUTOMATIC TRANSMISSION/TRANSAXLE – V8 5.0L PETROL/V8 S/C 5.0L PETROL

TRANSMISSION FLUID LEVEL CHECK (G1225338)

GENERAL PROCEDURES

19.22.16	SENSOR – HEATED OXYGEN (HO2S) – FRONT/LEFT/EACH – RENEW	5000 CC, AJ V8	0.6	USED WITHINS	+
44.24.06	LUBRICATION SYSTEM – CHECK AND TOP UP	5000 CC, AJ V8	0.5	USED WITHINS	

SPECIAL TOOL(S)

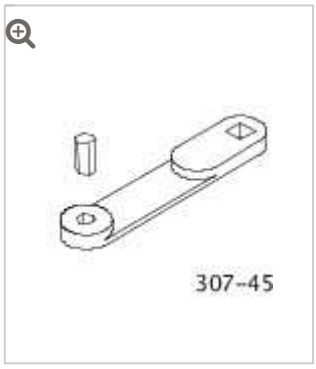

307-452

Wrench, Transmission Filler Plug

CHECK

WARNINGS:

- Observe due care when draining, as the fluid can be very hot.
- Observe due care when working near a hot exhaust system.

NOTE:

Some variation in the illustrations may occur, but the essential information is always correct.

1.
   - The following steps must be observed before starting the transmission fluid level check.
   - The vehicle must be on a horizontal ramp.
   - The parking brake must be applied.
   - The engine must be running for 2 minutes with the transmission control switch (TCS) in the "P" position.

2. **CAUTION:**

   Make sure that the transmission fluid temperature is below 30 degrees before starting the fluid level check.

   Connect the diagnostic tool to the vehicle.

3.
   - Start the engine.

- Apply, and hold, the footbrake.
- Move the selector lever from 'P' through all gear positions, pausing in each gear position for 2-3 seconds and return to the 'P' position.

4. **WARNING:**

> Make sure to support the vehicle with axle stands.

Raise and support the vehicle.

5. 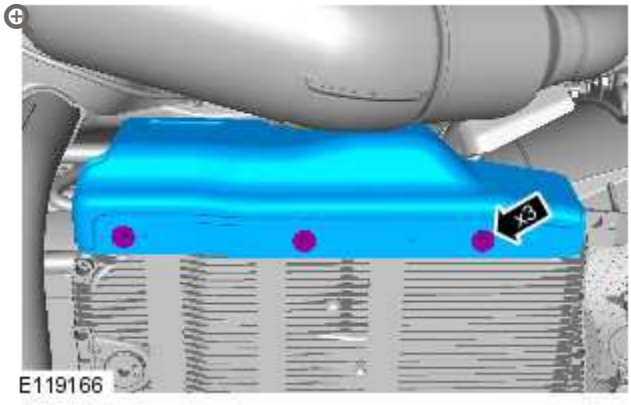

Torque: **9 Nm**

6. Place a suitable container under the transmission fluid fill plug.

7. **WARNINGS:**

> - Observe due care when draining, as the fluid can be very hot.
> - Observe due care when working near a hot exhaust system.

CAUTIONS:

- The transmission fluid level must only be checked when the temperature of the fluid is between 30 degrees and 50 degrees. The fluid level obtained will be incorrect if the reading is outside this temperature range.
- Discard the seal.

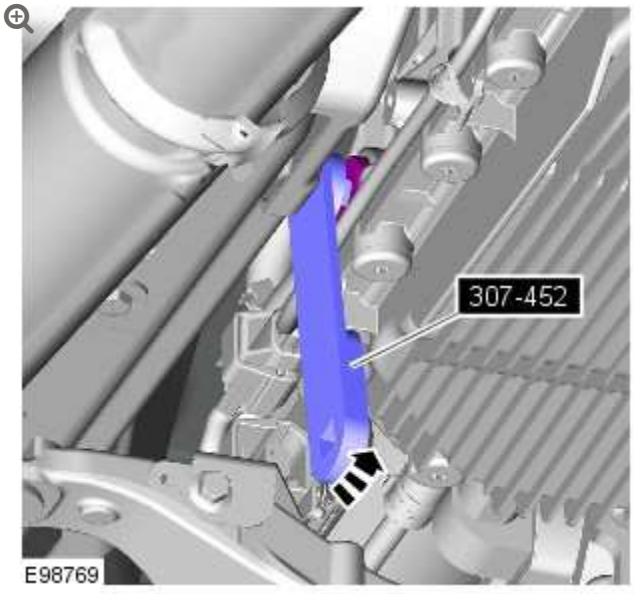

- *Special Tool(s):* 307-452
- Clean the area around the transmission fluid level plug.

ADJUSTMENT

WARNINGS:

- Observe due care when draining, as the fluid can be very hot.
- Observe due care when working near a hot exhaust system.

NOTE:

Some variation in the illustrations may occur, but the essential information is always correct.

8.

NOTE:

Use transmission fluid meeting Land Rover specification.

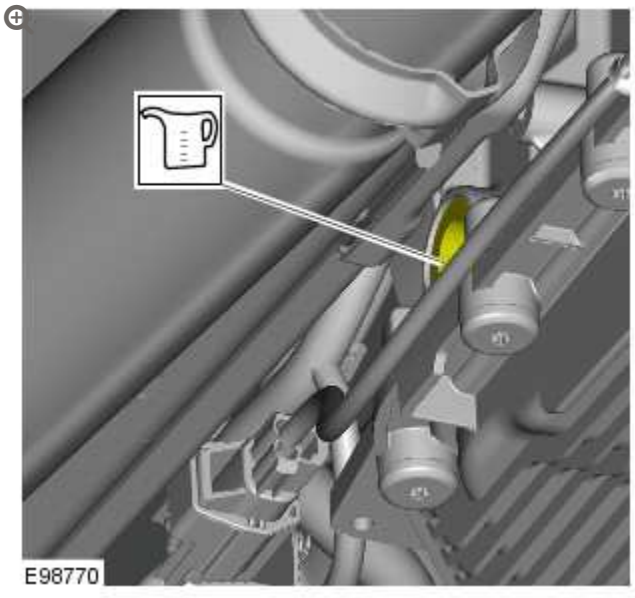

If the transmission fluid does not come out of the transmission fluid fill plug hole the transmission fluid level is insufficient. If this is the case add the transmission fluid in 0.5

liter units into the transmission fluid fill plug hole until fluid comes out.

9. **NOTE:**

Make sure the transmission fluid temperature does not exceed 50 °C (122 °F). If the transmission fluid temperature does exceed 50 °C (122 °F) stop the transmission fluid level check and allow the transmission fluid to cool until the temperature is below 30 °C (86 °F).

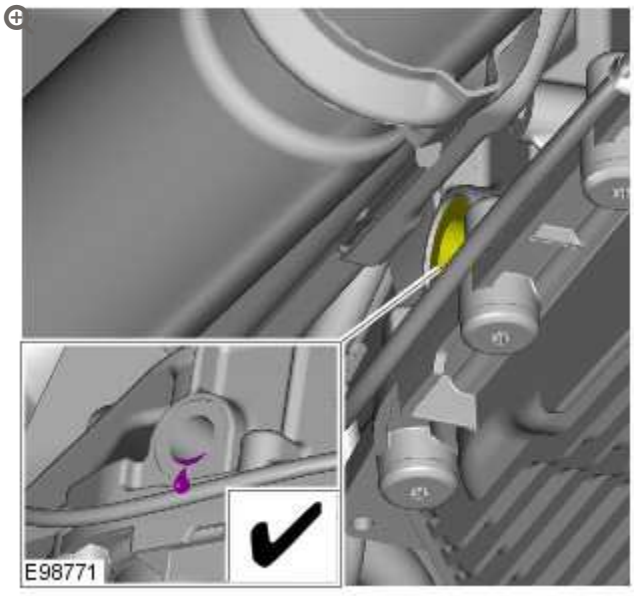

Allow the transmission fluid to drain from the transmission fluid filler plug hole until the flow almost stops.

10. **NOTE:**

Install a new sealing washer.

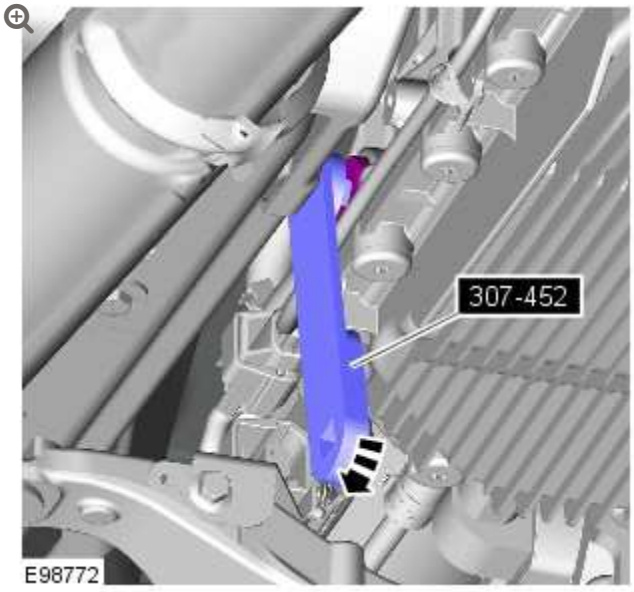

Using the special tool, install the new transmission fluid fill plug.

11. **CAUTION:**

Make sure the transmission fluid fill plug is tightened to the correct specification. Failure to follow this instruction may result in damage to the vehicle.

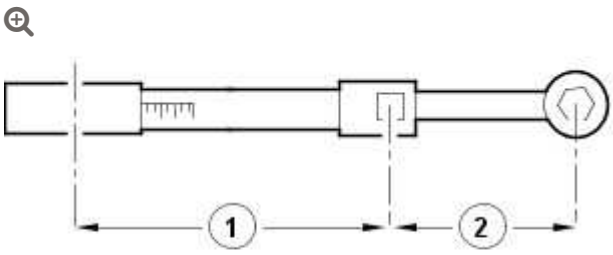

- To make sure the transmission fill plug is torqued to the correct specification. Using the special tool and torque wrench the following calculation steps must be followed.

- Step 1. Multiply 35 Nm by the effective length of the torque wrench (1).
- Step 2. Add the effective length of the special tool (2) to the effective length of the torque wrench (1).
- Step 3. Divide the total of step 1 by the total of step 2.
- Step 4. Set the torque wrench to the figure arrived at in step 3.
- Tighten the transmission fluid fill plug to the torque given by the calculation.

12. Remove the special tool.

13. Remove the container.

14. 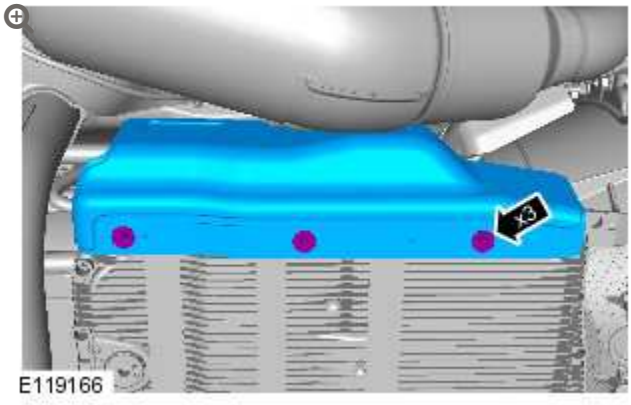

    Torque: **9 Nm**

15. Lower the vehicle.

16. Disconnect the diagnostic tool from the vehicle.

AUTOMATIC TRANSMISSION/TRANSAXLE – V8 5.0L PETROL/V8 S/C 5.0L PETROL

TRANSMISSION FLUID PAN, GASKET AND FILTER

(G1225989)

REMOVAL AND INSTALLATION

44.24.05	GASKET–OIL/FLUID PAN – RENEW	5000 CC, AJ V8	1.5	USED WITHINS	+

REMOVAL

NOTES:

- Removal steps in this procedure may contain installation details.
- Some variation in the illustrations may occur, but the essential information is always correct.

1. Disconnect the battery ground cable.
   Refer to: Specifications (414-00, Specifications).

2.

WARNING:

Make sure to support the vehicle with axle stands.

Raise and support the vehicle.

3. Refer to: Transmission Fluid Drain and Refill (307-01, General Procedures).

4. 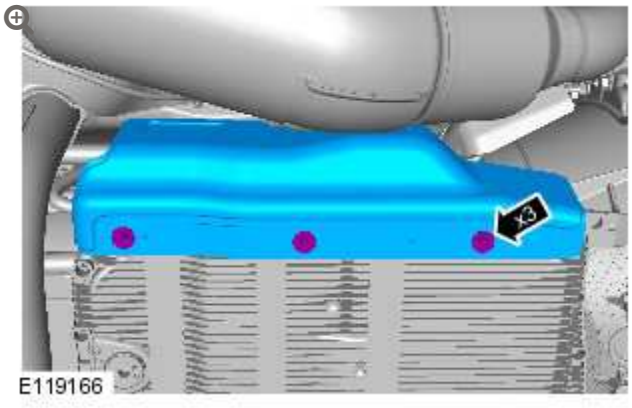

5.

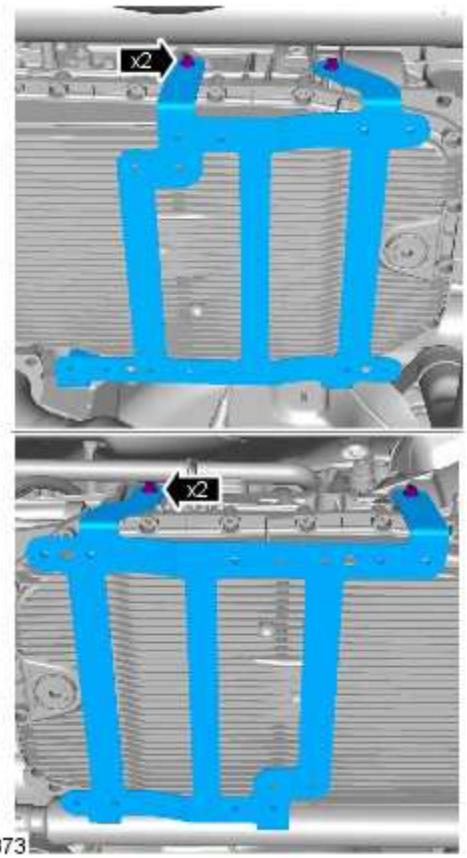

Torque: **9 Nm**

6.

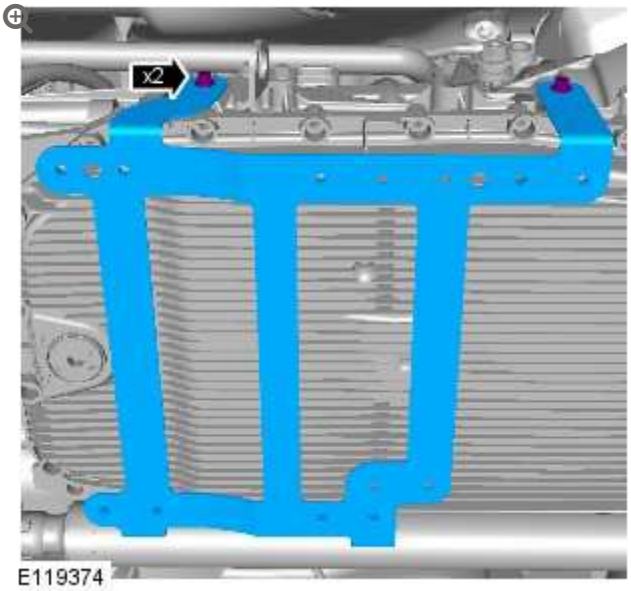

Torque: **9 Nm**

7.

CAUTIONS:

- Make sure that the area around the component is clean and free of foreign material.
- Be prepared to collect escaping fluids.
- Make sure that the mating faces are clean and free of foreign material.
- Make sure that the mating faces are clean and free of foreign material.

NOTE:

Remove and discard the gasket.

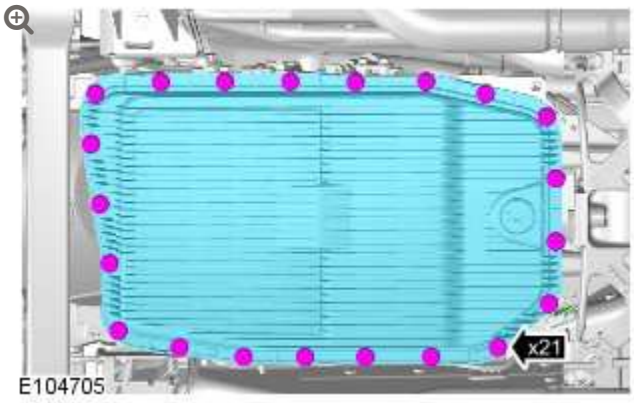

Torque: **10 Nm**

INSTALLATION

1.

NOTE:

Install a new gasket.

To install, reverse the removal procedure.

AUTOMATIC TRANSMISSION/TRANSAXLE - V8 5.0L PETROL/V8 S/C 5.0L PETROL

TRANSMISSION SUPPORT INSULATOR (G1225912)

REMOVAL AND INSTALLATION

12.45.08	MOUNTING - REAR - CENTRE - RENEW	5000 CC, AJ V8	1.1	USED WITHINS	+

REMOVAL

NOTE:

Some variation in the illustrations may occur, but the essential information is always correct.

1. Disconnect the battery ground cable.
   For additional information, refer to: Specifications (414-00, Specifications).

2. **WARNING:**

   Make sure to support the vehicle with axle stands.

Raise and support the vehicle.

3. Remove the transmission support crossmember.
   For additional information, refer to: Transmission Support Crossmember - 5.0L (502-02, Removal and Installation).

4. 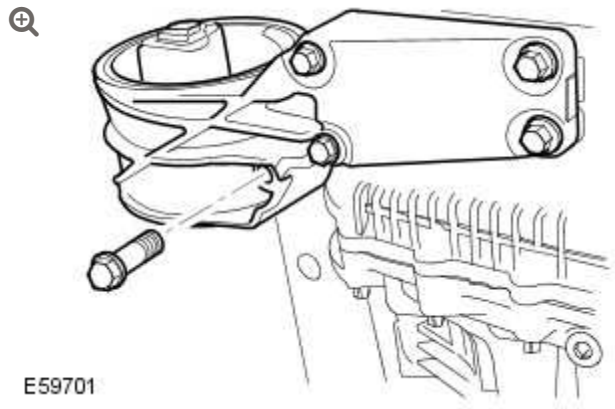

   Remove the transmission support insulator.
   - Remove the 5 bolts.

INSTALLATION

1. Install the transmission support insulator.
   - Tighten the bolts to 45 Nm (33 lb.ft).

2. Install the transmission support crossmember.
   For additional information, refer to: Transmission Support Crossmember - 5.0L (502-02, Removal and Installation).

3. Connect the battery ground cable.
   For additional information, refer to: Specifications (414-00, Specifications).

TRANSMISSION/TRANSAXLE COOLING – V8 5.0L PETROL/V8 S/C 5.0L PETROL

SPECIFICATIONS

Lubricants

CAUTIONS:

- Do not use any lubricant other than that specified.
- Do not over lubricate.

ITEM	SPECIFICATION
Transmission fluid	ATF Shell M 1375.4 Land Rover Part No. TYK500050

Capacity

ITEM	CAPACITY
Initial dry fill	9.5 Litres (16.7 pints) (10.0 US quarts)

Torque Specification

DESCRIPTION	NM	LB-FT	LB-IN

DESCRIPTION	NM	LB-FT	LB-IN
Transmission fluid cooler tube to transmission housing bolt	23	17	-
Transmission fluid cooler tube bracket to engine retaining bolt	10	7	-
Transmission fluid cooler retaining bolt	6	-	53

2012.0 RANGE ROVER (LM), 307-02

TRANSMISSION/TRANSAXLE COOLING – V8 5.0L PETROL/V8 S/C 5.0L PETROL

DESCRIPTION AND OPERATION

COMPONENT LOCATION

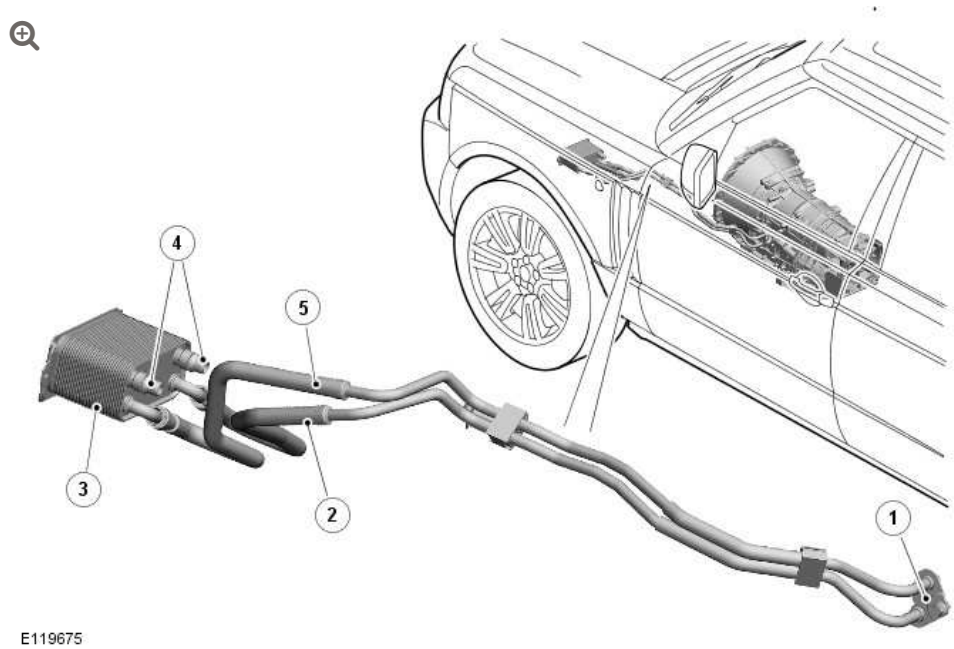

ITEM	DESCRIPTION
1	Latch-plate
2	Feed hose and pipe (from transmission)
3	Transmission fluid cooler

ITEM	DESCRIPTION
4	Engine coolant hose connections
5	Return hose and pipe (to transmission)

INTRODUCTION

Transmission cooling is provided by a transmission fluid cooler, which transfers heat from the transmission to the engine cooling system. The transmission fluid cooler is attached to the lower fan cowl on the rear of the cooling module.

Two hose and pipe assemblies connect the transmission fluid cooler to the automatic transmission. Two engine coolant hose connections are incorporated into the transmission fluid cooler for the supply and return of coolant from the engine cooling system.
For additional information, refer to: Engine Cooling (303-03A Engine Cooling - V8 5.0L Petrol/V8 S/C 5.0L Petrol, Description and Operation).

Fluid from the pump in the automatic transmission flows through the feed hose and pipe to the transmission fluid cooler. The fluid then flows through the transmission fluid cooler, and the return hose and pipe, to the sump of the automatic transmission.

TRANSMISSION/TRANSAXLE COOLING – V8 5.0L PETROL/V8 S/C 5.0L PETROL

TRANSMISSION FLUID COOLER – V8 5.0L PETROL/V8 S/C 5.0L PETROL (G1225382)

REMOVAL AND INSTALLATION

44.24.10	COOLER - OIL/FLUID - RENEW	5000 CC, AJ V8	1.8	USED WITHINS	+

REMOVAL

NOTE:

Removal steps in this procedure may contain installation details.

1. Disconnect the battery ground cable.
   Refer to: Specifications (414-00, Specifications).

2.

WARNING:

Make sure to support the vehicle with axle stands.

Raise and support the vehicle.

3. Refer to: Cooling System Draining and Vacuum Filling (303-03, General Procedures).

4. Refer to: Transmission Fluid Level Check (307-01B, General Procedures).

5. **WARNING:**

Be prepared to collect escaping fluids.

CAUTION:

Before disconnecting or removing the components, ensure the area around the joint faces and connections are clean and dry. Plug open connections to prevent contamination.

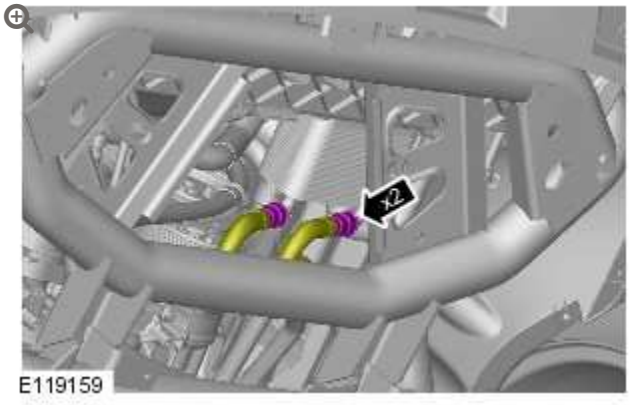

6. **WARNING:**

Be prepared to collect escaping fluids.

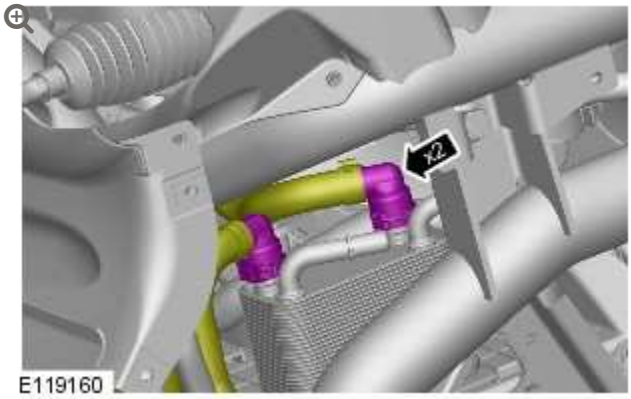

7. 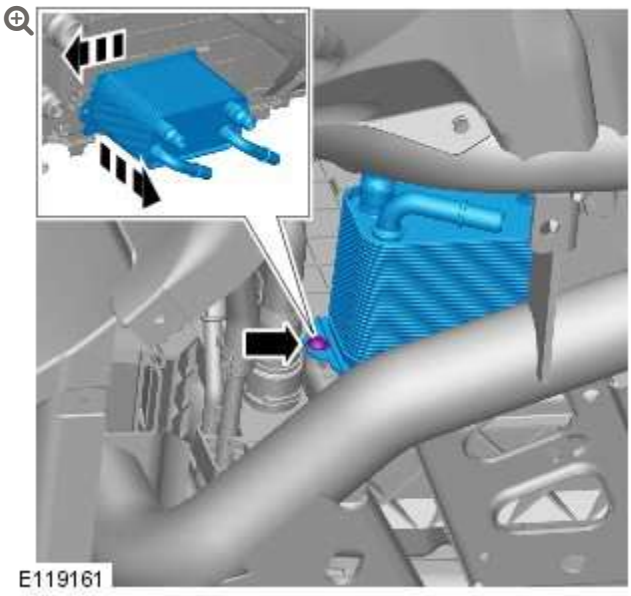

Torque: **6 Nm**

INSTALLATION

1. To install, reverse the removal procedure.

TRANSMISSION/TRANSAXLE COOLING – V8 5.0L PETROL/V8 S/C 5.0L PETROL

TRANSMISSION FLUID COOLER TUBES – V8 5.0L PETROL/V8 S/C 5.0L PETROL (G1225383)

REMOVAL AND INSTALLATION

44.24.15	HOSES/PIPES - OIL/FLUID COOLER - SET - RENEW	AJ V8, SUPERCHARGED	3.1	USED WITHINS	+

REMOVAL

NOTE:

Removal steps in this procedure may contain installation details.

1. Disconnect the battery ground cable.
   Refer to: Specifications (414-00, Specifications).

2.

WARNING:

Make sure to support the vehicle with axle stands.

Raise and support the vehicle.

3. Refer to: Engine Undershield (501-02, Removal and Installation).

4. Refer to: Front Driveshaft - 5.0L (205-01, Removal and Installation).

5. Refer to: Transmission Fluid Level Check (307-01B, General Procedures).

6. Remove the LH front road wheel.
Torque: **140 Nm**

7. **WARNING:**

Be prepared to collect escaping fluids.

CAUTION:

Always plug any open connections to prevent contamination.

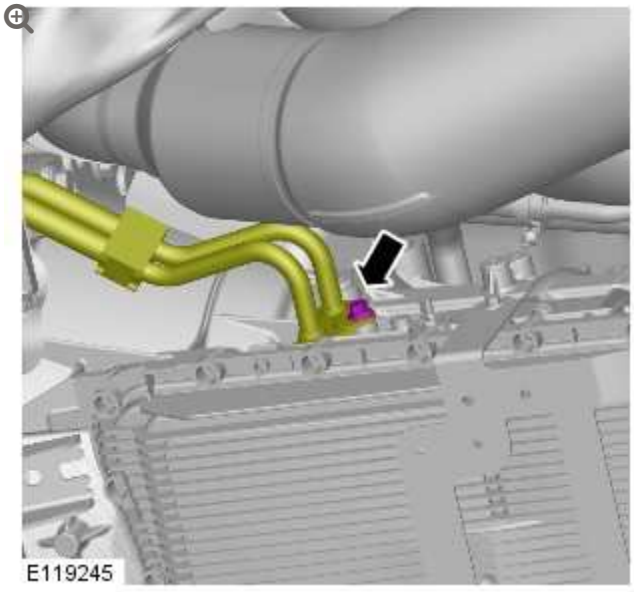

Torque: **23 Nm**

8.

WARNING:

Be prepared to collect escaping fluids.

CAUTION:

Before disconnecting or removing the components, ensure the area around the joint faces and connections are clean and dry. Plug open connections to prevent contamination.

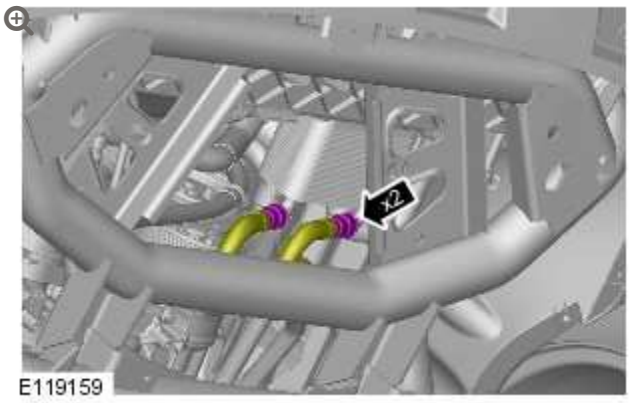

9.

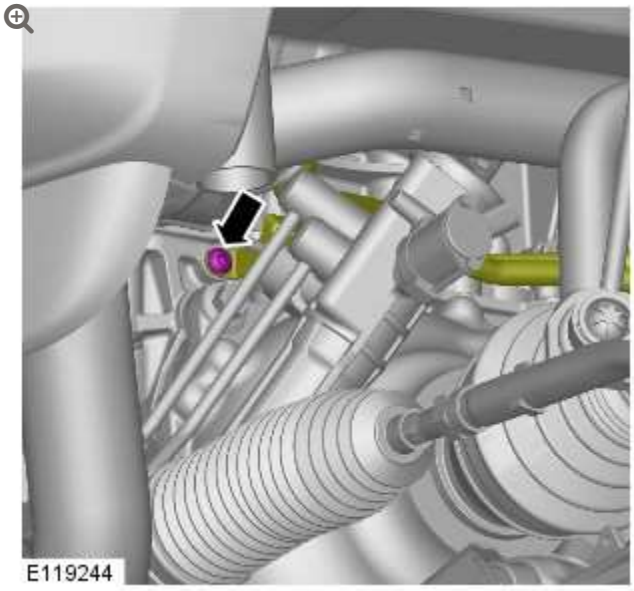

Torque: **10 Nm**

10.

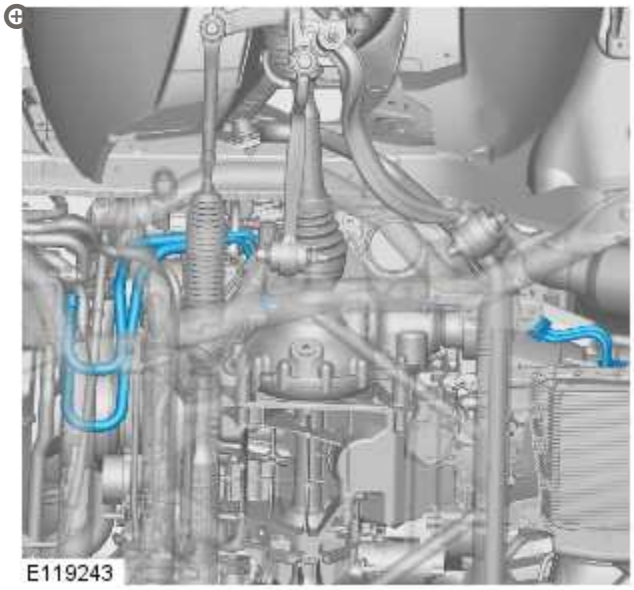

INSTALLATION

1. To install, reverse the removal procedure.

TRANSMISSION/TRANSAXLE COOLING – V8 5.0L PETROL/V8 S/C 5.0L PETROL

DIAGNOSIS AND TESTING

PRINCIPLE OF OPERATION

For a detailed description of the automatic transmission cooling system, refer to the relevant Description and Operation sections in the workshop manual. REFER to: Transmission Cooling (307-02 Transmission/Transaxle Cooling - 5.0L, Description and Operation).

INSPECTION AND VERIFICATION

1. Verify the customer concern by operating the system.
2. Visually inspect for obvious signs of damage and system integrity.

Visual Inspection

MECHANICAL
▪ Feed and return tubes ▪ Connections to the automatic transmission and the automatic transmission fluid cooler

MECHANICAL
▪ Automatic transmission fluid level

3. If an obvious cause for an observed or reported concern is found, correct the cause (if possible) before proceeding to the next step.

4. If the cause is not visually evident, verify the symptom and refer to the Symptom Chart, alternatively check for Diagnostic Trouble Codes (DTCs) and refer to the DTC Index.

SYMPTOM CHART

CONDITION	POSSIBLE CAUSES	ACTION
Over heating of the automatic transmission	Obstruction in the automatic transmission fluid cooler	Flush out the automatic transmission fluid cooler with new automatic transmission fluid. If the flushing is unsuccessful, install a new transmission fluid cooler.
Over heating of the automatic transmission	Obstruction in the automatic transmission fluid tubes	Flush out the automatic transmission fluid cooler tubes with new automatic transmission fluid. If the flushing is unsuccessful install new automatic transmission fluid cooler tubes.
Loss of automatic transmission fluid	Connections to the automatic transmission and the automatic transmission fluid cooler	Check the integrity of the tubes, connections and seals. Check the torque of the tube fixings.
Loss of automatic transmission fluid	Leak at oil cooler	Check the integrity of tubes, connections and seals. Check the torque of the tube fixings.

DTC INDEX

For a list of Diagnostic Trouble Codes (DTCs) that could be logged on this vehicle, please refer to Section 100-00. REFER to: Diagnostic Trouble Code (DTC) Index - DTC: Module Name: Transmission Control Module - Siemens (100-00, Description and Operation).

AUTOMATIC TRANSMISSION/TRANSAXLE EXTERNAL CONTROLS – V8 5.0L PETROL/V8 S/C 5.0L PETROL

SPECIFICATIONS

General Specification

ITEM	SPECIFICATION
Type	Cable operated from shift mechanism to bell crank on side of transmission with manual release from Park 'P' position in the event of electrical failure

Torque Specifications

DESCRIPTION	NM	LB-FT
Selector lever locknut	14	10
Transmission heat shield bolts	9	7
Transmission under shield bolts	9	7
Transmission selector cable retaining bracket bolts	9	7

2012.0 RANGE ROVER (LM), 307-05

AUTOMATIC TRANSMISSION/TRANSAXLE EXTERNAL CONTROLS – V8 5.0L PETROL/V8 S/C 5.0L PETROL

DESCRIPTION AND OPERATION

COMPONENT LOCATION

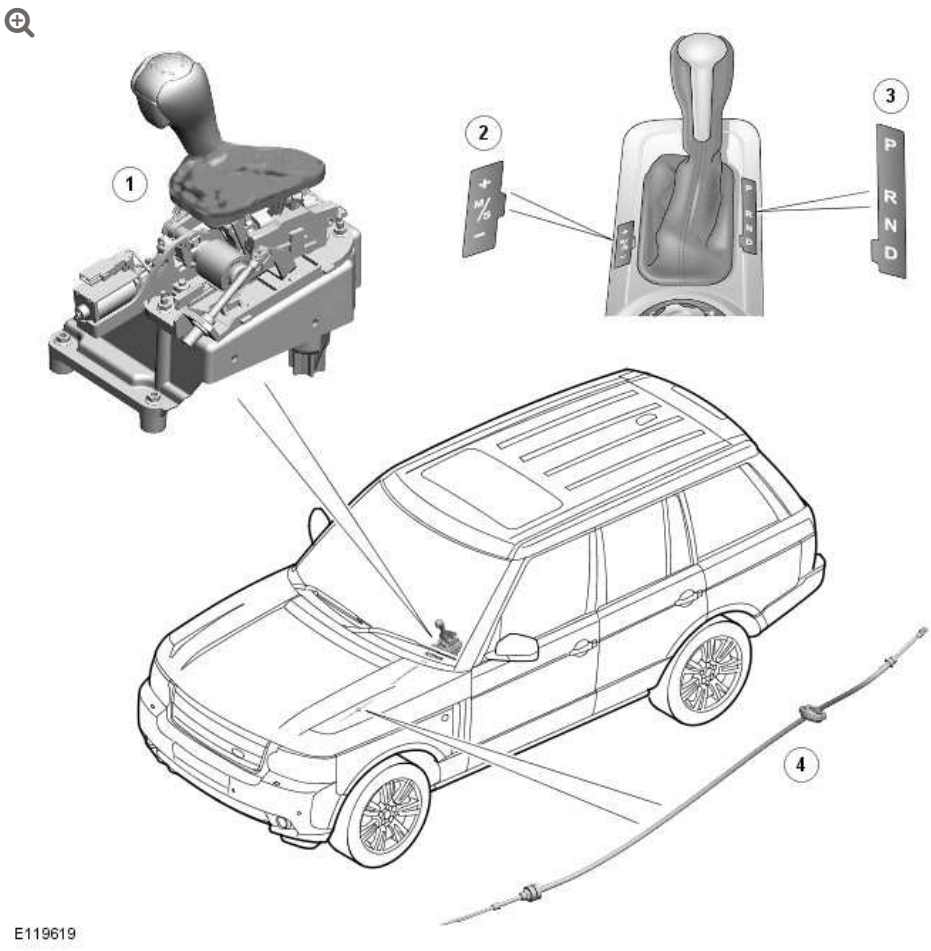

ITEM	DESCRIPTION
1	Selector lever assembly
2	M/S (manual/sport) display
3	Selector lever position display
4	Selector cable

INTRODUCTION

The external controls for the transmission consist of a selector lever assembly, a selector cable, a selector lever position display and a M/S display.

The selector cable transmits the position of the selector lever to the transmission.

The selector lever positions are displayed on the selector lever position display and the M/S display. The selector lever position and current forward gear are also displayed in the instrument cluster. For additional information, refer to: Transmission Description (307-01 Automatic Transmission/Transaxle - V8 5.0L Petrol/V8 S/C 5.0L Petrol, Description and Operation).

SELECTOR LEVER ASSEMBLY

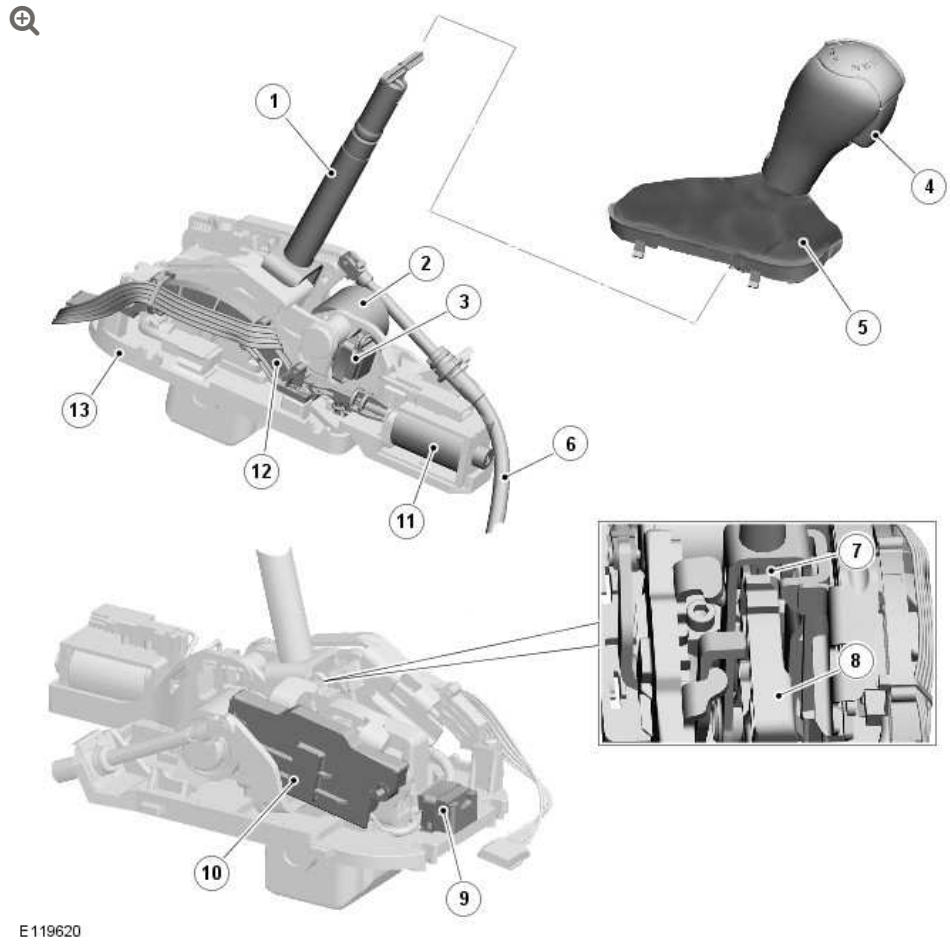

ITEM	DESCRIPTION
1	Selector lever
2	Shift interlock solenoid

ITEM	DESCRIPTION
3	Park lock switch
4	Release button
5	Gaiter
6	Selector cable
7	Plunger
8	Cam
9	M/S switch
10	Manual +/- CommandShift switch
11	Park lock solenoid
12	Selector lever position switch
13	Mounting plate

The selector lever assembly is located in the floor console. A bracket on the transmission tunnel provides the mounting for the selector lever assembly. A leather gaiter seals the gap between the selector lever and the trim of the floor console.

The selector lever positions are as follows:

- P (park) : no torque transmitted to the drive wheels and prevents the vehicle from moving by locking the transmission
- R (reverse) : selects reverse gear - only to be selected when the vehicle is stationary and the engine is at idle
- N (neutral) : no torque transmitted to the drive wheels - allows the vehicle to roll, so ensure the EPB (electronic parking brake) is applied before leaving the vehicle in this state
- D (drive) : this position uses all six forward gears in automatic operation

- M/S (manual/sport) : this position engages the sport mode, which uses all six forward gears as in D, but will upshift at higher engine speeds improving acceleration
- + and - : initiates upshifts and downshifts respectively, allowing the transmission to be used as a sequential manual transmission (CommandShift mode) with six forward gears.

The selector lever assembly has a cast mounting plate which provides for the location of the selector components. The selector lever is connected to a gimbal mechanism which allows for the selection of P, R, N, D in a forward or backward direction and, when D is selected, selection between D and M/S in a left/right direction. In the M/S position, the selector lever can be moved in a forward or backward direction to select + or - for manual (CommandShift) operation.

The mounting plate also houses the following components:

- Manual +/- CommandShift switch
- Shift interlock solenoid
- Selector lever position switch
- Manual/Sport switch
- Park lock solenoid
- Park lock switch.

A release button on the head of the selector lever operates a plunger, which rests on a cam at the base of the selector lever. Pressing the release button raises the plunger clear of the cam. The cam profile is such that the release button must be pressed to move the selector lever into and out of the P, and from N to the R positions.

MANUAL +/- COMMANDSHIFT SWITCH

The manual +/- switch is located on the LH (left-hand) side of the selector lever assembly. The switch comprises a housing which provides the location for a sliding contact. When the selector lever is moved to the M/S position, a dog on the selector lever engages with a slotted abutment on the sliding contact. When the selector lever is moved to the + or - position the dog moves the sliding contact, which completes a momentary ground circuit with one of two microswitches at each end of the switch, which correspond to the + or - positions.

This momentary signal is received by the TCM (transmission control module), which, on first operation of the switch, initiates manual mode and operates the transmission in the selected gear.

In this position, a spring moves the selector lever to the center position when released.

SHIFT INTERLOCK SOLENOID

The shift interlock solenoid is located at the front of the selector lever assembly. The selector lever is connected to a locking plate which has two holes that correspond to the P and N positions. When the ignition is on and the selector lever is in the P or N position, the solenoid is energized by the TCM. When energized, the solenoid ejects a pin which engages in the locking plate, preventing the lever from being moved.

When the footbrake is applied, the ECM (engine control module) sends a high speed CAN (controller area network) message to the TCM, which de-energizes the solenoid allowing the lever to be moved from the P or N position. This prevents the selector lever from being moved to the D or R position unintentionally and the application of the brakes also prevents the vehicle 'creeping' when the gear is engaged.

SELECTOR LEVER POSITION SWITCH

The selector lever position switch is located on the RH (right-hand) side of the selector lever assembly. The switch has a moving contact which is connected to the selector lever. As the selector lever is moved, the sliding contact moves in the switch and, in turn, completes a circuit with four further contacts in the switch, which represent the four lever positions P, R, N and D. The switch is connected to the selector lever position display via a ribbon cable and provides the ground connection for the LED (light emitting diode)'s under the P, R, N and D symbols.

MANUAL/SPORT SWITCH

The M/S switch is a cam operated microswitch located at the rear of the selector lever assembly. A lever with a roller is attached to the body of the M/S switch. When the selector lever is moved between the D and M/S positions, the roller rides along a cam on the selector lever, which operates the switch. When the selector lever moves from the D position to the M/S position, the M/S switch closes. When the selector lever moves from the M/S position to the D position, the M/S switch opens.

The M/S switch is installed in a ground circuit from the TCM. The TCM operates the transmission in the sport mode when the M/S switch is closed and in the normal automatic mode when the M/S switch is open. When closed, the M/S switch also provides a ground for the M/S display, to illuminate the M/S symbol.

PARK LOCK SWITCH

This switch detects that the park lock lever has engaged in the selector mechanism and allows the P position to be confirmed both inside the transmission and at the selector lever. This signals to the TCM that shutdown is allowable following an ignition off sequence. Failure to activate this switch will result in a flashing P in the transmission status display of the instrument cluster and the TRANSMISSION NOT LOCKED IN PARK warning in the message

center on ignition off, with the TCM still alive for up to 10 minutes or until the vehicle is locked.

PARK LOCK SOLENOID

The park lock solenoid is part of a normally locked selector lever mechanism which requires the ignition on to unlock. This solenoid prevents movement of the selector lever from the P position in the ignition off state, to prevent vehicle roll-away due to inadvertent operation. This solenoid is energized continuously with the ignition on.

SELECTOR CABLE

The selector cable is a Bowden cable that connects the selector lever to the gear change lever on the RH side of the transmission. A clip secures the outer cable to the mounting plate of the selector lever assembly. The inner cable is secured to an arm which is connected to the selector lever via a U shaped bracket and pin.

The transmission end of the outer cable is secured to a bracket on the transmission by a clamp nut. The inner cable is attached to the gear change lever by a clamp bush and locknut, which provide a means of adjustment for the selector cable.

A grommet seals the selector cable where it passes through the transmission tunnel.

SELECTOR LEVER POSITION DISPLAY

The selector lever position display is located in the trim of the floor console, to the right of the selector lever. The display contains the symbols P, R, N and D, with a red LED under each symbol. When the ignition is on, the appropriate symbol is illuminated to indicate the position of the selector lever.

The four LED have a common power feed from the M/S display and individual ground connections with the selector lever position switch. At any one time, the selector lever position switch connects to ground only the LED under the symbol that corresponds to the position of the selector lever.

MANUAL/SPORT DISPLAY

The M/S display is located in the trim of the floor console, to the left of the selector lever. The display contains the symbol M/S, with a red LED under the symbol. When the ignition is on, the symbol is illuminated when the selector lever is in the M/S position.

The LED has a power feed from the ignition relay in the CJB (central junction box) and a ground connection with the M/S switch. The M/S switch connects the LED to ground only when the selector lever is in the M/S position.

CONTROL DIAGRAM

NOTE:

A = Hardwired.

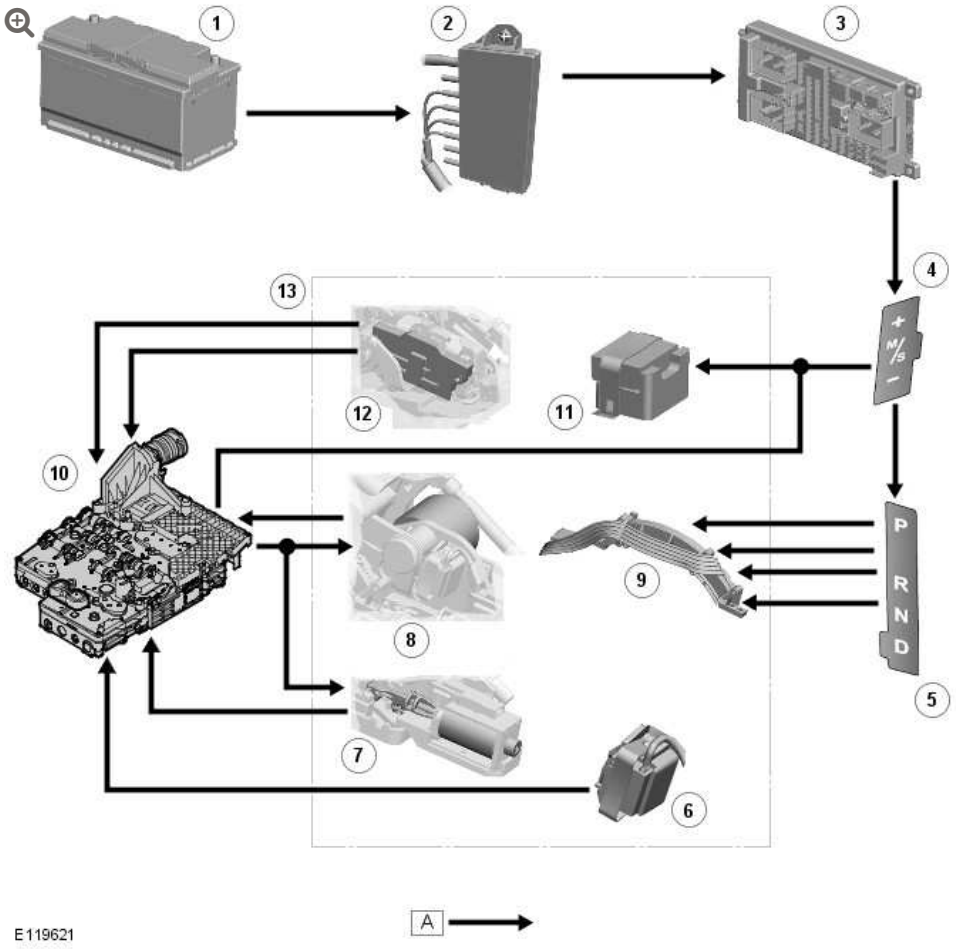

ITEM	DESCRIPTION
1	Battery
2	BJB (battery junction box) (50 A megafuse)
3	CJB (central junction box) (ignition relay)
4	M/S display
5	Selector lever position display
6	Park lock switch
7	Park lock solenoid
8	Shift interlock solenoid
9	Selector lever position switch
10	TCM
11	M/S switch
12	Manual +/- CommandShift switch

ITEM	DESCRIPTION
13	Selector lever assembly

AUTOMATIC TRANSMISSION/TRANSAXLE EXTERNAL CONTROLS – V8 5.0L PETROL/V8 S/C 5.0L PETROL

DIAGNOSIS AND TESTING

PRINCIPLES OF OPERATION

For a detailed description of the automatic transmission/transaxle external controls system and operation, refer to the relevant Description and Operation section of the workshop manual. REFER to: External Controls (307-05 Automatic Transmission/Transaxle External Controls - 5.0L, Description and Operation).

INSPECTION AND VERIFICATION

CAUTION:

Diagnosis by substitution from a donor vehicle is **NOT** acceptable. Substitution of control modules does not guarantee confirmation of a fault, and may also cause additional faults in the vehicle being tested and/or the donor vehicle.

NOTE:

Check and rectify basic faults before beginning diagnostic routines involving pinpoint tests.

1. Verify the customer concern.
2. Visually inspect for obvious signs of mechanical or electrical damage.

Visual Inspection

MECHANICAL	ELECTRICAL
▪ Check for correct gear selector lever cable adjustment. ▪ Visibly worn or damaged components ▪ Loose or missing fastners	▪ Fuses ▪ Loose or corroded electrical connectors

3. If an obvious cause for an observed or reported concern is found, correct the cause (if possible) before proceeding to the next step.
4. If the cause is not visually evident, check for Diagnostic Trouble Codes (DTCs) and refer to the DTC Index.

DTC INDEX

For a list of Diagnostic Trouble Codes (DTCs) that could be logged on this vehicle, please refer to Section 100-00.

FOUR-WHEEL DRIVE SYSTEMS

SPECIFICATIONS

Torque Specifications

NOTE:

*** New bolts must be used when a new component is installed.**

DESCRIPTION	NM	LB-FT
* Transfer case shift motor Torx bolts	35	26
* Transfer case clutch control solenoid Torx bolts	5	4
* High/Low range sensor Torx bolts	5	4

FOUR-WHEEL DRIVE SYSTEMS

FOUR-WHEEL DRIVE (4WD) CONTROL MODULE

(G1707089)

REMOVAL AND INSTALLATION

41.30.01	ELECTRONIC CONTROL UNIT - RATIO CONTROL - RENEW	ALL DERIVATIVES	0.1	USED WITHINS	+

REMOVAL

NOTES:

- Removal steps in this procedure may contain installation details.
- RHD shown, LHD is similar.

1.

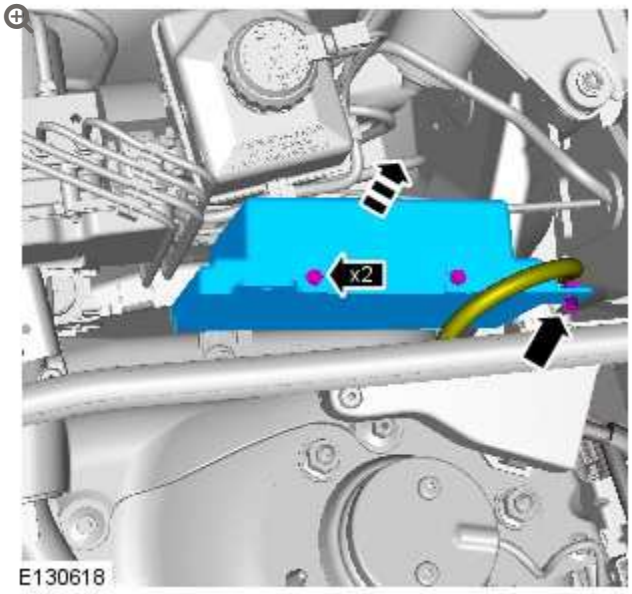

TORQUE: 1.6 Nm

2.

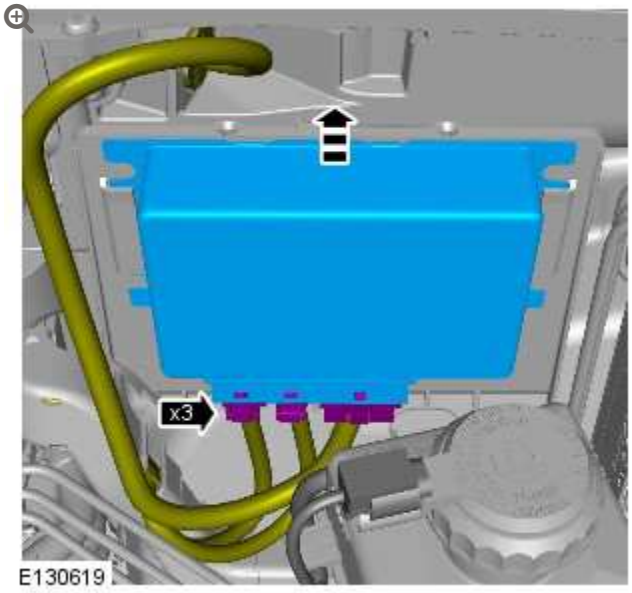

INSTALLATION

1. To install, reverse the removal procedure.

2. Connect the Land Rover approved diagnostic equipment.

1. Clear any Diagnostic Trouble Codes (DTCs).
2. Start the diagnostic service function **transfer case-transfer case replacement**.
3. Clear any Diagnostic Trouble Codes (DTCs) after calibration and check for correct operation.

FOUR-WHEEL DRIVE SYSTEMS

DESCRIPTION AND OPERATION

Transfer Box Component Location

NOTE:

4.4L TDV8 shown - other models similar

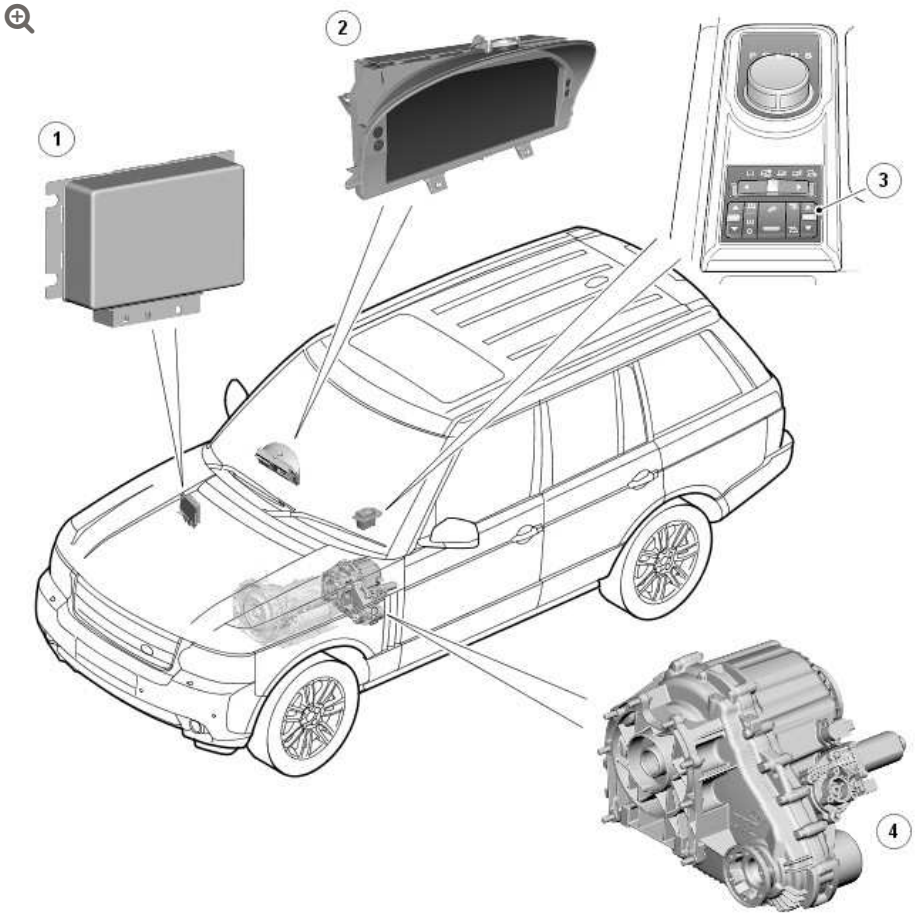

ITEM	DESCRIPTION
1	Transfer box control module
2	Instrument cluster
3	Range change selection switch
4	Transfer box

Transfer Box Exploded View

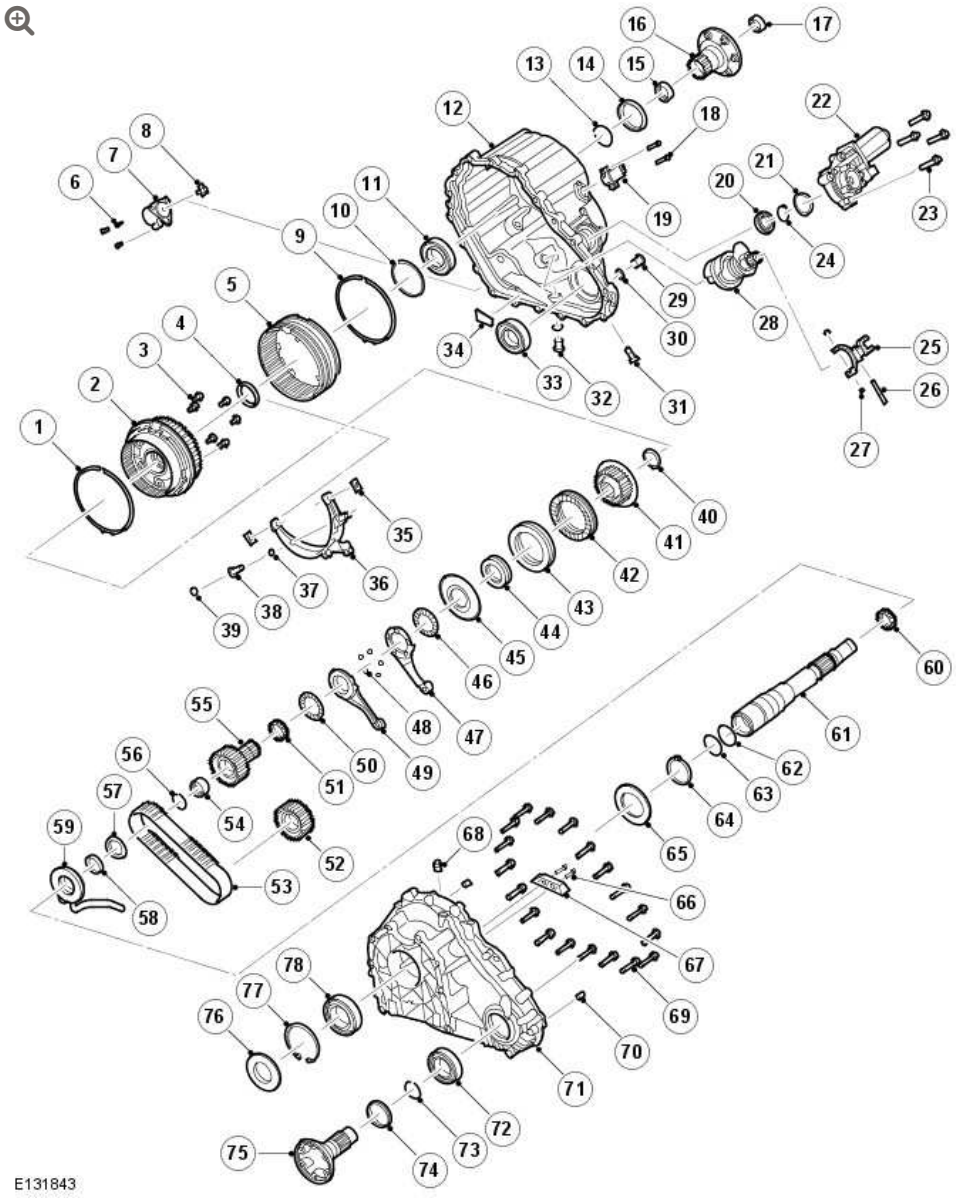

ITEM	DESCRIPTION
1	Synchronisation spring
2	Differential assembly
3	Bolt, 6 off
4	Spacer ring
5	Shifting sleeve
6	Bolt, 3 off
7	Solenoid
8	Shifting element

ITEM	DESCRIPTION
9	Synchronisation spring
10	Circlip
11	Ball bearing
12	Rear casing
13	Circlip
14	Seal ring
15	Needle roller bearing
16	Rear output flange
17	Needle roller bearing
18	Bolt, 2 off
19	Selector fork position sensor
20	Bearing
21	Circlip
22	Transfer box motor assembly
23	Bolt, 4 off
24	Circlip
25	Shifting fork
26	Fork pin
27	Sliding block
28	Actuator assembly
29	Fill plug
30	Seal ring
31	Ball retention
32	Drain plug
33	Seal ring
34	Particle collector magnet
35	Sliding blocks, 2 of

ITEM	DESCRIPTION
36	High/low shifting fork
37	O-ring
38	High/low fork pin
39	Circlip
40	Circlip
41	Clutch hub
42	Clutch friction plate, 10 off
43	Clutch steel plate, 10 off
44	Disc spring, 6 off
45	Clutch piston
46	Axial needle roller bearing
47	Transfer box motor lever assembly
48	Ball, 5 off
49	Transfer box motor lever assembly
50	Axial needle roller bearing
51	Needle roller bearing
52	Front output sprocket
53	Chain
54	Needle roller bearing
55	Sprocket
56	Circlip
57	Thrust washer
58	Spacer ring
59	Oil pump assembly
60	Needle roller bearing
61	Input shaft

ITEM	DESCRIPTION
62	Retaining ring
63	O-ring
64	Circlip
65	Shim
66	Screw (2 off)
67	Snubber
68	Breather cartridge
69	Bolt, 19 off
70	Dowel pin (2 off)
71	Front casing
72	Bearing
73	Circlip
74	Seal ring
75	Front output flange
76	Seal ring
77	Circlip
78	Bearing

GENERAL

The DD295 transfer box is full time, permanent four-wheel-drive unit, with 50/50 torque distribution to the front and rear driveshafts. Magna Steyr Powertrain manufactures the unit, which is identical for all engine derivatives and supports the following features:

- Permanent four-wheel-drive with a bevel gear centre differential, providing a 50:50 torque split
- Selectable high and low range for optimum on-road and off-road performance

- Two-speed, fully synchronized 'shift-on-the-move' system allows the driver to change the range without having to stop the vehicle
- Electronically controlled multi-plate clutch providing a centre differential lock and torque biasing function to give improved traction performance and vehicle dynamic stability.

A strategy, to electronically control the centre differential multi plate clutch assembly, has been developed to provide;

- a pre-loading function, increasing locking torque with increased driving torque
- a slip controller to increase locking torque under off-road conditions and decrease locking torque for optimum comfort, e.g. parking.

The unit is located under the vehicle and is mounted on the cross-member, behind the transmission.

The transfer box receives a torque input from the transmission output shaft, which is passed through the unit to 2 outputs for the front and rear drive shafts.

The input torque is equally distributed via a bevel gear type differential. In order to provide an optimal torque distribution to each wheel in all driving conditions, the unit is equipped with an electronically controlled locking and torque-biasing device. This device detects wheel slip via various vehicle system inputs to the transfer box control module and locks the differential accordingly. The locking torque is applied through a multi-plate clutch assembly.

A planetary gear set, located in the differential assembly, allows the driver to select high or low range whilst driving, this is known as 'shift on the move'. When in low range, the planetary gear set provides a ratio of 2.93:1, which gives the vehicle an extremely low crawl speed

for off road driving and trailer towing. High range is a direct drive from the transmission output shaft and provides a 1:1 ratio.

Both the centre differential locking and biasing and the 'shift on the move' features are actuated via a DC (direct current) transfer box motor, which is controlled by the transfer box control module, via a PWM (pulse width modulation) signal.

Transfer Box - Sectional View

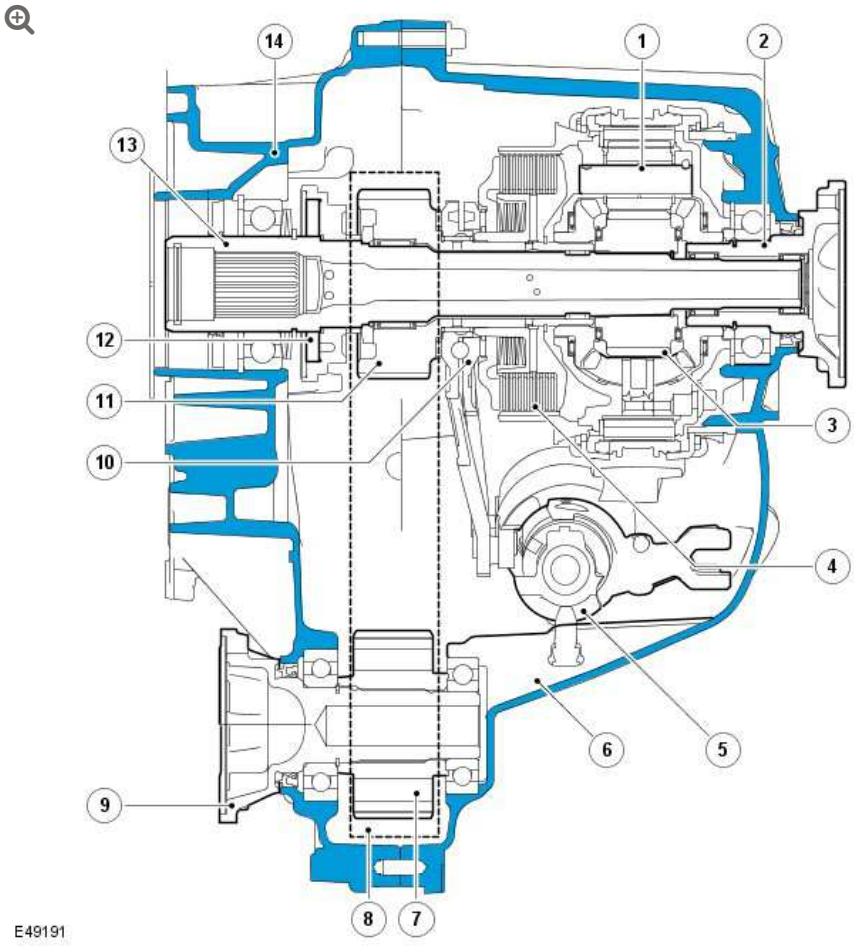

ITEM	DESCRIPTION
1	Planetary gear set
2	Rear output flange
3	Centre differential assembly
4	Multi-plate clutch
5	Transfer box motor module

ITEM	DESCRIPTION
6	Rear housing assembly
7	Front output sprocket
8	Chain drive
9	Front output flange
10	Transfer box motor levers
11	Sprocket
12	Oil pump assembly
13	Input shaft
14	Front housing assembly

Transfer Box Power Flow

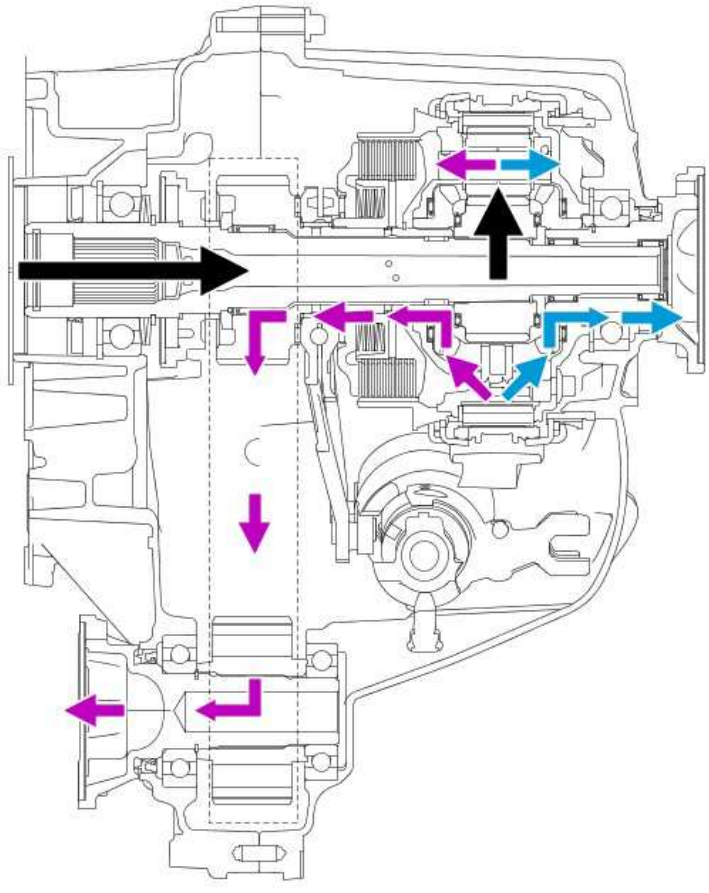

E49192

Input torque from the transmission is transferred to the input shaft of the transfer box and then onto the planetary sun gear and planetary pinion gears. The planetary pinion gears are held in place by the planet pinion shafts, which are connected to the differential carrier, and drive the differential pinion gears. The torque is then distributed to both the front and rear carriers, which are connected to the outputs of the transfer box. The rear carrier is connected directly to the rear output flange; the front carrier is connected to the sprocket and therefore to the chain drive, which provides front output flange rotation.

TRANSFER BOX CASINGS

The front and rear casing assemblies are manufactured from cast aluminium.

FRONT CASING ASSEMBLY

The front casing assembly provides the location for the input shaft bearing, the front output flange bearing and the oil pump. It is also equipped with threaded holes to mount the chassis mounting bush, 2 lifting eyes and a breather cartridge for the transfer box breather pipe. The breather pipe allows an equalisation between atmospheric and internal transfer box pressure.

On models from 2011MY, the front casing has an additional boss cast on the inside. The boss is used to mount a snubber which is secured with 2 screws. The snubber suppresses chain vibrations which can occur under medium acceleration conditions, therefore improving NVH issues. During normal operation the chain does not contact the snubber.

REAR CASING ASSEMBLY

The rear casing assembly provides the location for the rear output flange bearing, the transfer box motor and the oil fill and drain plug.

Fins are cast into the rear casing assembly to improve heat dissipation. The unit number is also stamped into the rear housing.

OIL PUMP

An oil pump assembly is located in the front casing to provide lubrication for the bearings and rotary components through cross-drillings in the input shaft. A flat-sectioned coupling on the input shaft drives the rotor of the pump; the stator is fixed to the front housing assembly. A tube is attached to the pump, which leads into a calm suction area at the bottom of the 2 casing assemblies. The collector magnet in the suction area of the pump collects any metallic debris.

CHAIN DRIVE

The chain-drive transfers drive from the centre differential to the front output flange. A 3/8" pitch chain connects the sprocket on the transfer box input shaft with the sprocket on the front output flange. As both sprockets have the same number of teeth, the rotational speed of both sprockets is identical.

TRANSFER BOX MOTOR

One motor operates both the high/low range change and the differential locking and torque-biasing device (multi-plate clutch). The motor solenoid switches between the 2 functions, while the motor provides the rotational movement for both operations.

TRANSFER BOX MOTOR POSITION FOR CLUTCH CONTROL MODE

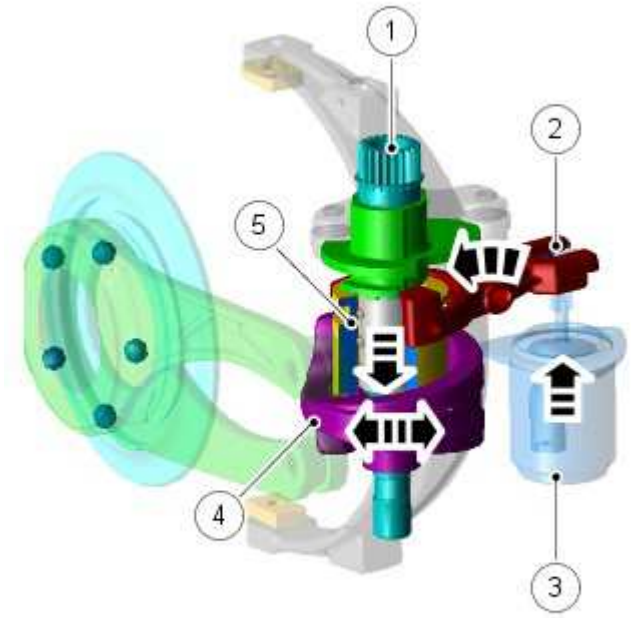

E49193

ITEM	DESCRIPTION
1	Motor shaft
2	Solenoid shift fork
3	Solenoid
4	Clutch control disc
5	Shifting sleeve

To actuate the multi-plate clutch, the transfer box control module energizes the solenoid. The solenoid pin pivots the solenoid shift fork, which engages the shifting sleeve into the dogteeth on the clutch control disc. The rotational movement of the motor shaft is then linked to the clutch control disc via the shifting sleeve.

This is the normal operating mode of the transfer box. In this position, the range change function is disengaged and mechanically locked.

TRANSFER BOX MOTOR POSITION FOR HIGH/LOW RANGE MODE

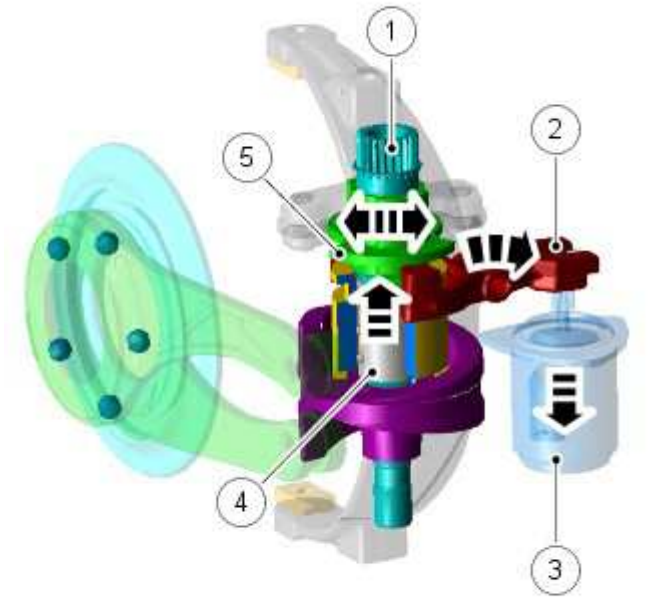

E49194

ITEM	DESCRIPTION
1	Motor shaft
2	Solenoid shift fork
3	Solenoid
4	Shifting sleeve
5	Actuation cam

To actuate the high/low range change, the transfer box control module de-energizes the solenoid. A spring in the solenoid retracts the solenoid pin and rotates the solenoid shift fork. This engages the

shifting sleeve to the dogteeth on the high/low actuation cam. The rotational movement of the motor shaft is then linked to the cam.

In this position, the multi-plate clutch is open, the differential cannot be locked and torque cannot be biased. Once the range change is complete the system returns to clutch control mode. In the event of an electrical failure, the motor will default to this position.

CENTER DIFFERENTIAL ASSEMBLY

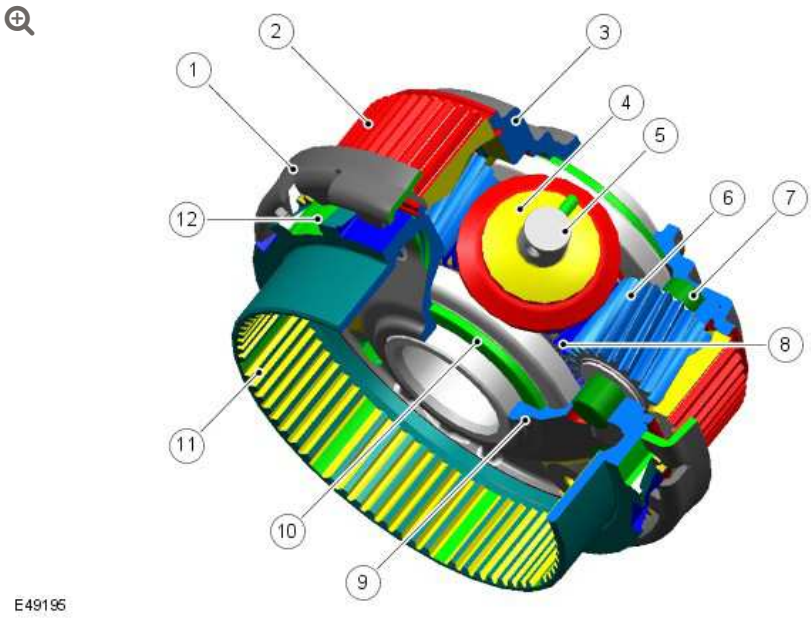

ITEM	DESCRIPTION
1	Synchronisation cup and spring
2	Planetary ring gear
3	Differential carrier
4	Pinion gears
5	Pinion gear shafts
6	Planetary pinion gears
7	Planetary pinion gear shafts
8	Planetary sun gear
9	Differential cover

ITEM	DESCRIPTION
10	Differential side gears
11	Multi-plate clutch basket
12	Dogteeth

The center differential assembly is the primary feature of the transfer box. Torque is transmitted through the center differential carrier and distributed to the differential gears and the front and rear output flanges. The planetary gear set, for the high/low range change function, is also an integral part of the centre differential assembly.

The assembly comprises 3 differential pinion gears and shafts, which are equally spaced within the centre differential carrier. The differential shafts have a rigid connection to the differential carrier. Located between the pinion gears are 3 planetary pinion gears and shafts. The planetary sun gear and 2 differential side gears are located in the centre line of the carrier.

The planetary ring gear is supported in both directions by the differential casing and the differential cover. The planetary ring gear is connected to a shifting sleeve, which is engaged in either high or low range.

The multi-plate clutch basket, which is welded to the differential casing, supports the friction plates, the dogteeth for high range engagement and the synchronisation cup and spring for the 'shift-on-the-move' function.

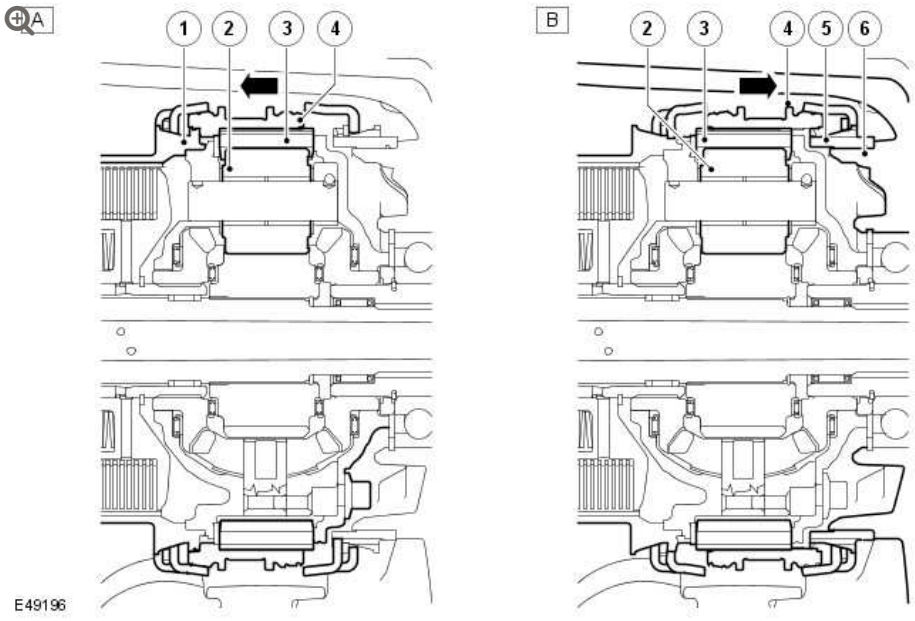

ITEM	DESCRIPTION
A	High range position
B	Low range position
1	Dogteeth
2	Planetary pinion gears
3	Planetary ring gear
4	Shifting sleeve
5	Low range dogteeth
6	Rear carrier assembly

When high range is engaged, the shifting sleeve connects to the differential carrier via dogteeth. The planetary ring gear, via the shifting sleeve, and the planetary pinion gears, via the planetary shafts, which are also attached to the differential carrier. The planetary gear set rotates as 1 unit and therefore turns the differential side gear with a 1:1 ratio.

In low range the motor moves the shifting sleeve in the direction of the low range dogteeth. The low range dogteeth, with the synchronisation cup and spring, are fixed to the rear carrier

assembly. When the shifting sleeve is engaged with the low range dogteeth, the planetary ring gear, via the shifting sleeve, is stationary and the planetary pinion gears, via the planetary bolts, turn the differential side gears with 2.93: 1 ratio.

HIGH RANGE ACTUATION SEQUENCE

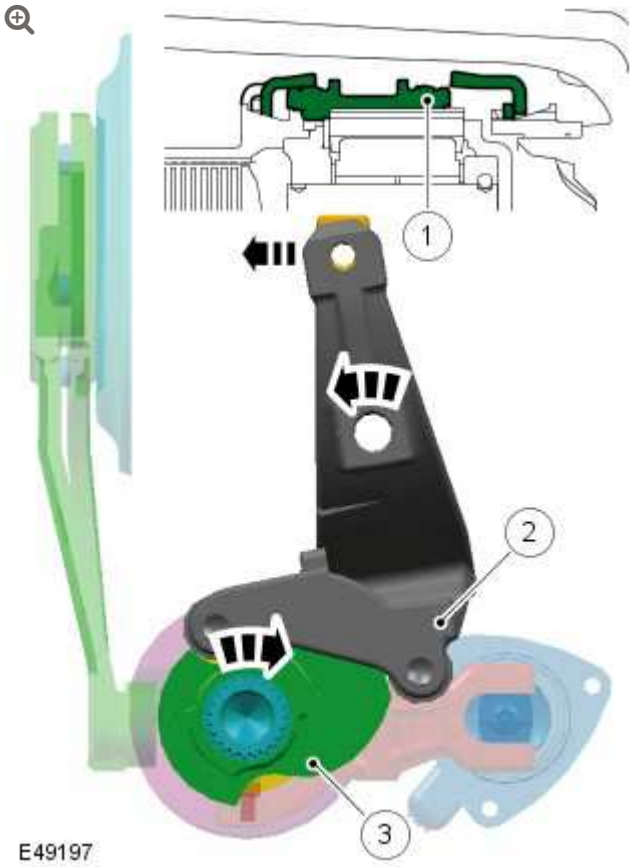

ITEM	DESCRIPTION
1	Shifting sleeve
2	High/low shifting fork
3	Shifting cam

The rotational movement of the motor shaft turns the shifting cam to high range position. The shifting cam then moves the shifting sleeve, via the high/low shifting fork, into the high range position. After the synchronisation sequence, the planetary ring gear is connected to the high range dogteeth, via the shifting sleeve, on the differential

carrier. In this position, the input speed equals the output speed, which equates to a high range ratio of 1:1.

LOW RANGE ACTUATION SEQUENCE

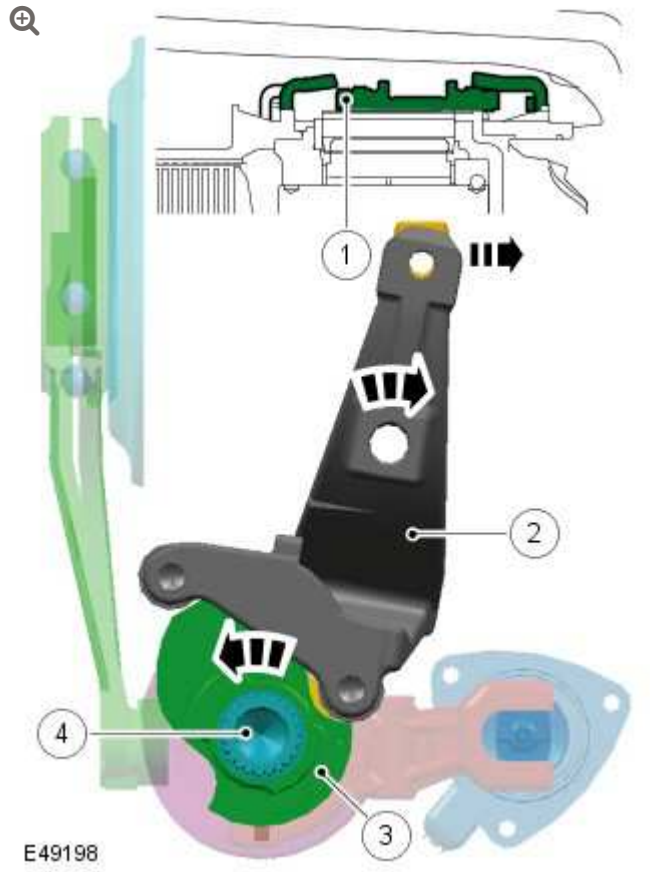

ITEM	DESCRIPTION
1	Shifting sleeve
2	High/low shifting fork
3	Shifting cam
4	Motor shaft

The rotational movement of the motor shaft turns the shifting cam into low range position. The shifting cam then moves the shifting sleeve of the centre differential assembly via the high/low shifting fork into low range position. After the synchronisation sequence, the planetary ring gear is connected to the low range dogteeth, via the

shifting sleeve, on the rear carrier assembly. The output speed is then reduced to a ratio of 2.93:1.

MULTI-PLATE CLUTCH ASSEMBLY

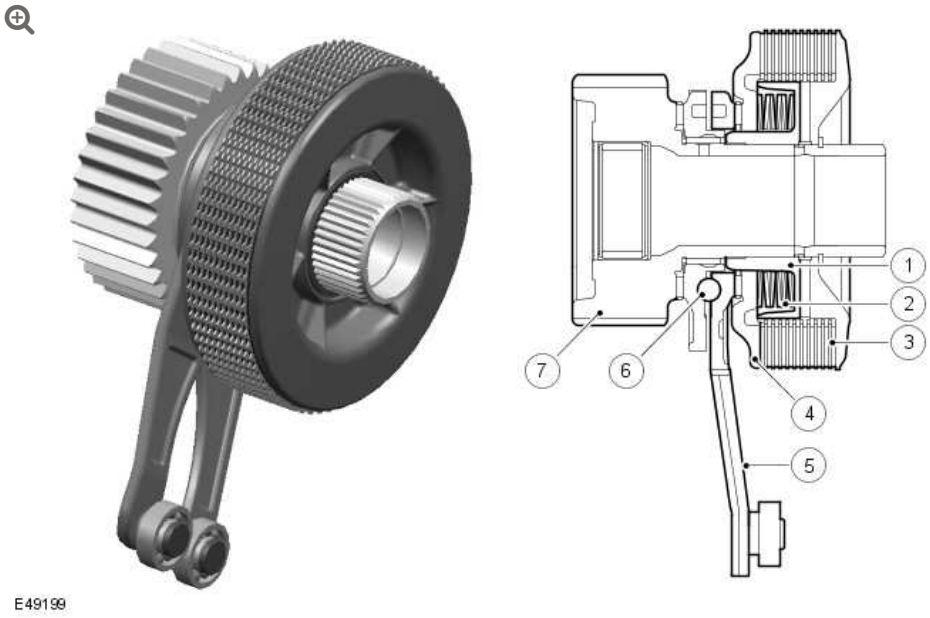

ITEM	DESCRIPTION
1	Clutch hub
2	Cup springs
3	Clutch plates
4	Clutch piston
5	Motor levers
6	Ball ramp mechanism
7	Sprocket

The multi-plate clutch assembly for both centre and rear differentials act in a similar way. The aim of the multi-plate clutch assembly is to prevent excessive differential slip and therefore maximise the traction performance of the vehicle. This is fundamentally different from the 'braked' traction control, which can only counteract differential slip when it occurs.

A certain amount of differential slip is required to allow the vehicle to turn corners and to remain stable under control of the ABS (anti-lock brake system). The transfer box control module monitors the driver's demands through primary vehicle controls and automatically sets the slip torque at the differentials. The system is completely automatic and does not require any special driver input.

The multi-plate clutch assembly actively controls the torque flow through the centre differential and optimises the torque distribution in the driveline. The clutch assembly biases the torque from the transmission to the axle and wheels with the higher grip and prevents the wheels with the lower grip from spinning.

The multi-plate clutch assembly comprises the sprocket, which is connected to the front differential side gear, the motor levers with the ball ramp mechanism, the clutch hub as support for the clutch plates, the clutch piston to generate friction between the clutch plates, and a pack of cup springs (2) to return the clutch piston into its original position.

One set of friction plates are connected to the clutch hub; the other set of friction plates are connected to the multi-plate clutch basket, which is welded to the centre differential housing.

MULTI-PLATE CLUTCH ACTUATION

Transfer box motor levers in initial position, multi-plate clutch open condition

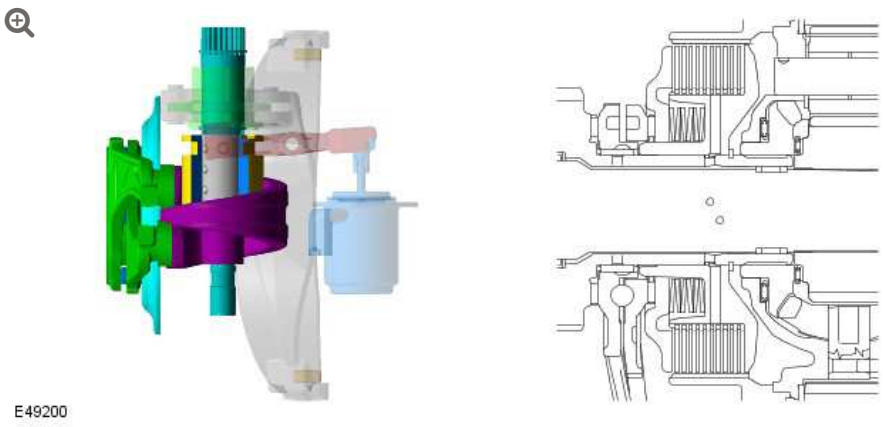

Transfer box motor in end position, multi-plate clutch closed condition

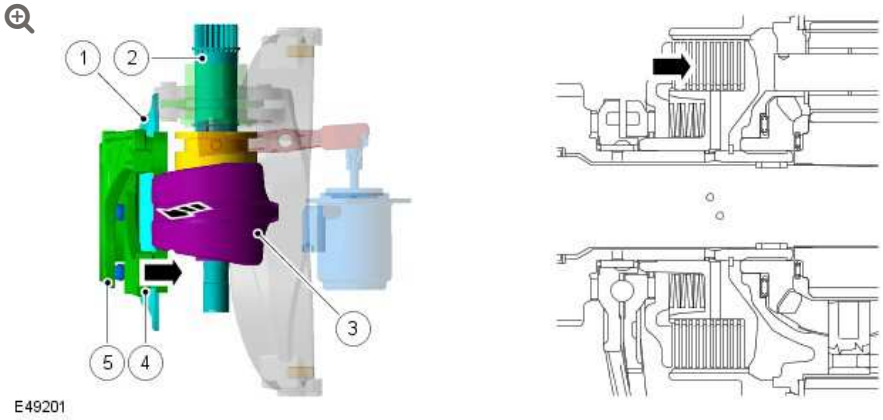

ITEM	DESCRIPTION
1	Clutch piston
2	Motor shaft
3	Clutch control disc
4	Motor levers
5	Ramp mechanism balls

By turning the clutch control disc, via the motor shaft, the motor levers are rotated relative to each other. This relative movement acts on 5 balls in a ramp mechanism between the 2 levers and give a defined axial movement. The movement forces the clutch piston to induce friction between the plates supported by the clutch hub and

the plates supported by the clutch basket on the differential carrier. This frictional force inhibits the differential rotation; the differential carrier and front differential side gear are locked together.

TRANSFER BOX CONTROL MODULE

The transfer box control module controls the high/low 'shift-on-the-move' actuation and the multi-plate clutch actuation. The control module is located on the RH (right-hand) side of the engine compartment, rearward of the suspension turret.

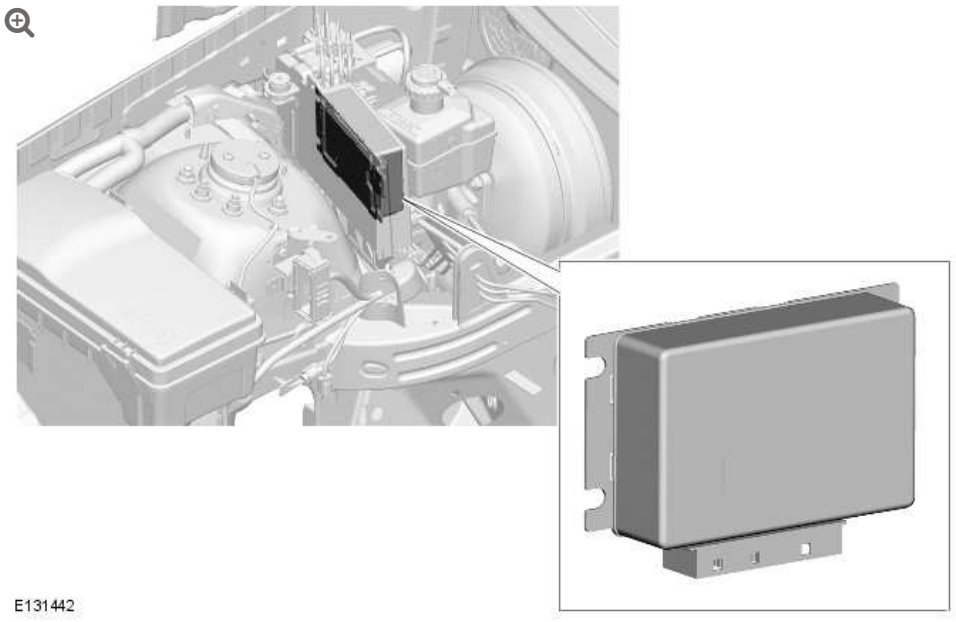

ITEM	DESCRIPTION
1	Engine Control Module (ECM)
2	Transfer box control module
3	Battery Junction Box (BJB)
4	E-box

The control module is connected to the CAN (controller area network) bus and controls transfer box operation using CAN messages from other control modules on the network.

The control module memorises the position of the transfer box motor when the ignition is switched off.

The transfer box control module uses the same actuator to control both range change function and application of centre differential locking torque. The module uses position feed back from the actuator to provide smooth range changing capability and graduated application of locking torque appropriate for the current driving conditions. Range change can be carried out while moving providing the transmission is in neutral and the vehicle is below the speed necessary for the requested range change.

The control module uses 3 connectors for all inputs and outputs. It receives a permanent power supply via a 30A fuse located in the BJB (battery junction box), and an ignition supply via a 5A fuse in the CJB (central junction box).

The control module uses a series of programmed shift maps to control the synchronisation speed and ensure that a maximum shift time of approximately 1 second is achieved.

If the control module is replaced, the Land Rover approved diagnostic system must be connected to the vehicle and the transfer box control module self-calibration procedure must be performed. This procedure must also be performed if the transfer box motor assembly is replaced.

DEFAULT/LIMP-HOME STRATEGY

If a fault occurs with the transfer box, the transfer box control module or 1 of the required input signals i.e. road speed signal, the control module records an error code and will respond appropriately to provide the highest level of system capability under the specific fault conditions. The following fault states are possible:

FAULT STATE	SYSTEM RESPONSE	DRIVER WARNING

FAULT STATE	SYSTEM RESPONSE	DRIVER WARNING
No reduction in capability	Diagnostic Trouble Code (DTC) will be recorded but no effect on performance	None
Clutch control not possible. Temporary over temperature condition	The tractive capability of the vehicle, off road, is reduced	Driveline over temperature warning lamp or 'TRANSMISSION OVERHEAT SLOW DOWN' on message centre
Clutch control not possible. Permanent fault	The tractive capability of the vehicle, off road, is reduced	Driveline fault warning lamp or 'TRANSMISSION FAULT TRACTION REDUCED' on message centre
Range change not possible	The system inhibits the driver from making a range change	Driveline fault warning lamp or 'TRANSMISSION RANGE CHANGE NOT AVAILABLE' on message centre
Stuck in Transfer box neutral	The transfer box is stuck between high and low range resulting in no drive to wheels	Flash low range indicator plus 'APPLY HANDBRAKE' (PARK BRAKE US/CAN) message on message centre. The message will only display at times when it is deemed safe or necessary for the hand/parkbrake to be applied. It will not display during normal driving for example

If a driveline over temperature condition has occurred, after the driveline has been allowed to cool, clutch control will be re-enabled and the warnings will disappear. There is no need to seek service assistance following an over temperature event.

If clutch control or range change is not possible due to a permanent fault the driver must seek service assistance at the earliest opportunity.

If the system suffers a fault, which causes the transfer box to fail in neutral, the control module is designed to continue attempting to

engage the requested range or return to its original range for a fixed number of attempts. If this has not been successful and the low range lamp is still flashing the driver should bring the vehicle to a halt and attempt the range change again while stationary. If this does not work after a number of attempts, key off for 30 seconds, restart engine and request range change again while stationary. The driver must seek service assistance at the earliest opportunity.

TRANSFER BOX CONTROL MODULE INPUTS

The transfer box control module receives the following inputs:

- Range change selection switch
- High/low position sensor
- Transfer box actuator motor temperature
- Transfer box actuator motor position sensor
- CAN bus messages.

CAN BUS MESSAGES

The CAN bus is a high speed broadcast network connected between various vehicle control modules. The CANbus carries an extensive list of messages between the different control modules enabling more sophisticated control with reduced complexity. Data on the network is packaged for efficient communication and prioritised according the urgency and importance of the messages. The bus comprises 2 wires, which are twisted together to minimise electromagnetic interference (noise) produced by the CAN messages.

The transfer box control module is connected on the CAN bus and controls transfer box operation using CAN messages from other control units on the network. Wheel speed, vehicle acceleration, engine torque and speed, gear information, from the transmission, temperature information, car configuration, axle ratios and Terrain

Response mode inputs, are some of the main signals received by the control module.

In the event of a CAN bus failure the following symptoms may be observed:

- Shift from high to low or low to high inoperative
- Instrument cluster low range warning lamp inoperative
- Warning messages or lamps displayed in instrument cluster.

RANGE CHANGE SELECTION SWITCH

NOTE:

4.4L TDV8 shown - other models similar

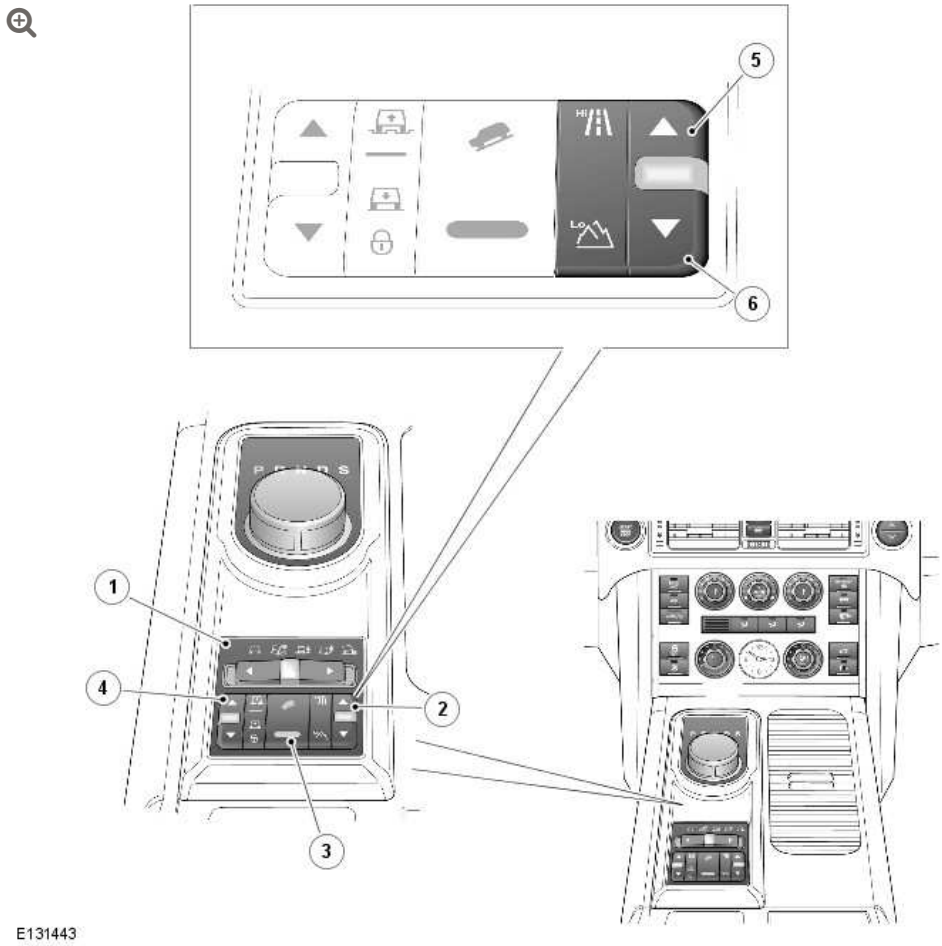

ITEM	DESCRIPTION
1	Transfer box high range switch
2	Transfer box low range switch

The range change selection switch is located behind the Electronic Transmission Selector (ETS), in the floor console. The switch is a 2-position sprung device. The driver presses the switch in the appropriate direction to select a range change, the transfer box will then change to the other available range. Pressing the opposite side of the switch reverts the previously selected range.

When the switch is moved to the high or low range position, it completes a momentary connection to 12V with the transfer box control module. The transfer box control module receives this momentary signal and attempts a range change. The switch will return to its normal (central) position when released.

HIGH/LOW POSITION SENSOR

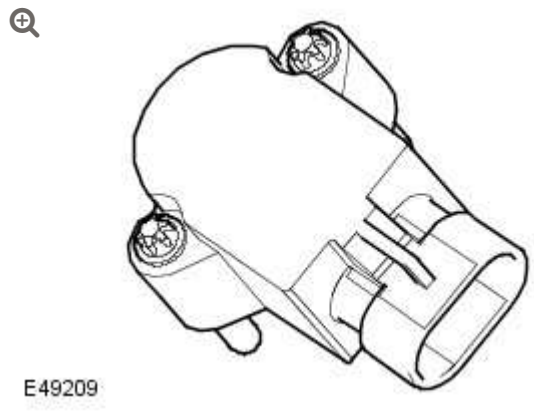

The high/low position sensor converts the pivotal movement of the high/low fork into a PWM signal on the input. The PWM signal of the position sensor differs between high range and low range. The control module checks this signal and informs the driver, via the instrument cluster and the range change selection switch LED's, if a range change is in progress or has been completed.

The high/low position sensor is connected to the transfer box control module via a 3-pin connector.

TRANSFER BOX CONTROL MODULE OUTPUTS

The transfer box control module sends the following outputs:

- CAN bus messages
- Key interlock solenoid
- High/low range change LED
- Transfer box motor
- Solenoid.

CAN BUS MESSAGES

The control module also sends messages via the CAN bus to tell other control modules on the network, the status of the transfer box. The high/low status, clutch torque and default mode status are some of the main signals sent out by the transfer box control module.

HIGH/LOW RANGE CHANGE LED

The control module is responsible for illuminating the 2 'high/low' range change LED (light emitting diode)'s adjacent to the range change switch. One LED indicates high range and the other indicates low range.

One LED will be on continuously when in the corresponding range.

When changing range, the current range LED will remain on until the new range status has been achieved.

The new range LED will start flashing only when the range change has commenced (i.e. speed and neutral conditions have been met). The new range LED will be illuminated continuously at the same instant that the current range (now the old range) LED turns off.

The flash rate is 2 Hz with a 50% duty cycle.

The LED's have 2 levels of intensity, high when the vehicle lights are switch off and low when they are switched on.

If both lights are flashing at 0.5 Hz, this would indicate a transfer box fault or that the transfer box is in undefined range and may require calibration.

TRANSFER BOX MOTOR

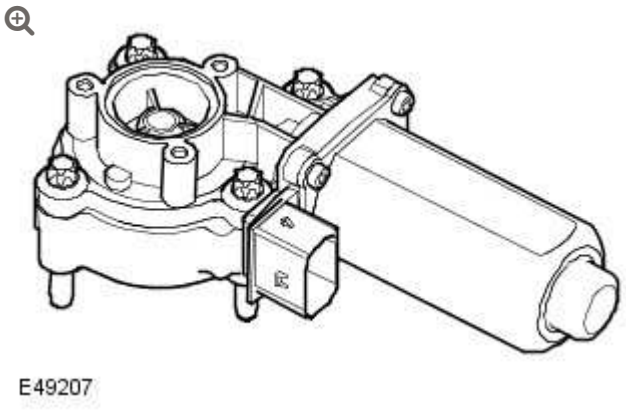

The transfer box motor provides the necessary movement to perform the high/low range change and the multi-plate clutch actuation. The motor is located on the rear casing assembly and secured with four bolts.

The motor is a PWM controlled, DC motor with an integrated worm gear reduction drive. It is connected to the transfer box control module with an 8-pin connector; the power supply of the motor is maintained through 2 large diameter cables on the motor connector. An internal position sensor checks the rotational movement of the motor.

There is a temperature sensor located within the motor housing.

SOLENOID

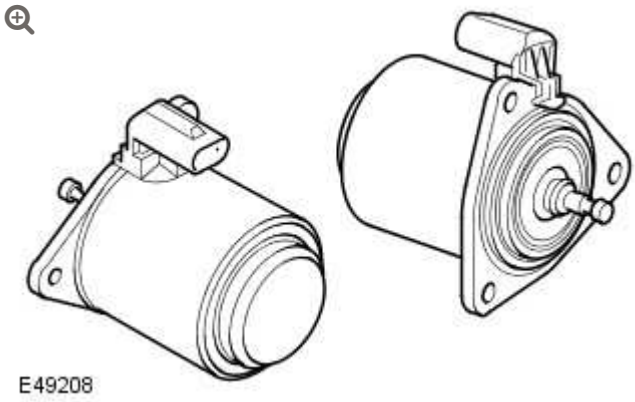

The solenoid switches the power flow on the actuation system between high/low range change mode and clutch control mode. When the solenoid is energized, the solenoid pin deploys and activates the clutch control mode. When the solenoid is de-energized, the internal spring rejects the solenoid pin and activates the high/low range change mode.

NOTE:

In order to replace the solenoid in service, the solenoid must be energized using the Land Rover approved diagnostic system.

The solenoid is connected to the transfer box control module with a 2-pin connector.

STATUS INDICATION

The low range status indicator will take the form of a mountain symbol and has the following logic:

- Lamp on = low range
- Lamp off = high range

- Lamp flashing = range change in progress/range undefined/range fault.

There will also be a message displayed in the message centre, which can also inform the driver of any faults with the transfer box.

The following table shows the messages that can be displayed in the message centre relating to the transfer box:

MESSAGE	DESCRIPTION	CHIME
'LOW RANGE SELECTED'	Transfer case has engaged low range after a range change request	Single
'HIGH RANGE SELECTED'	Transfer case has engaged high range after a range change request	Single
'SPEED TOO HIGH FOR RANGE CHANGE'	Range change request when vehicle speed too high	Single
'SELECT NEUTRAL FOR RANGE CHANGE'	Range change request when lever not in neutral	Single
'APPLY HANDBRAKE' (PARKBRAKE US/CAN)	This alerts the driver that the transmission park lock function is inoperative due to transfer box out of high or low range. Transfer box control module has stopped transmitting on the CAN bus during a range change or while in neutral and as a result the transmission park lock function is inoperative	Continuous
'TRANSMISSION RANGE CHANGE NOT AVAILABLE'	Transfer box has detected a fault inhibiting a new range change. Control unit has shut down due to thermal overload	Single
'TRANSMISSION OVER HEAT SLOW DOWN'	Centre differential temperature is approaching the over heated threshold	Single
'TRANSMISSION FAULT – TRACTION REDUCED'	Centre differential has failed - operating as an open differential	Single

MESSAGE	DESCRIPTION	CHIME
'TRANSMISSION FAULT – TRACTION REDUCED'	Transfer box control module has stopped transmitting on the CAN bus and defaults to open centre differential	Single

SERVICE

Basic Dimensions (Millimetres)

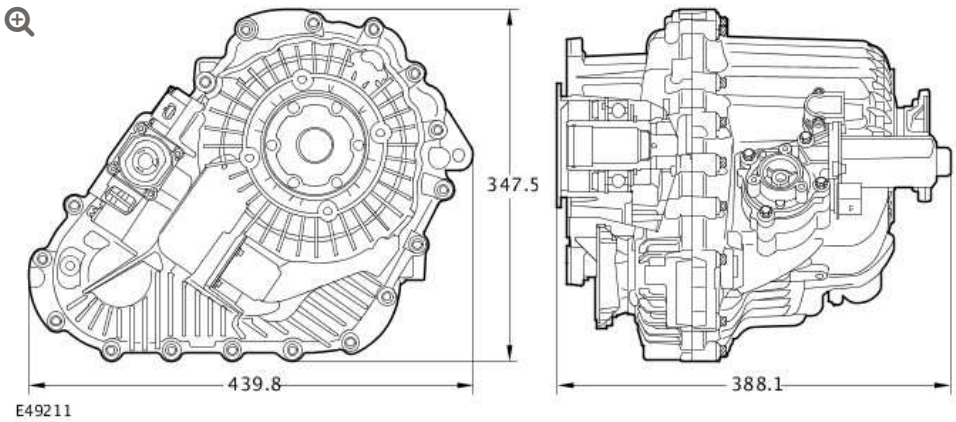

The transfer box weighs 40.30 kg without oil and 41.55 kg with oil. The unit requires 1500 ml ± 2% of oil from empty (dry).

The oil used in the transfer box is Shell TF 0753, which has been specially developed by Magna Steyr and Shell. The oil contains unique additives, which enhance the transfer box operation. No other oil must be used in the transfer box.

There is a unique type of grease, Weicon anti-seize montagepaste grau TL 7391, that needs to be applied to the units input shaft spline when installing or reinstalling the transfer box.

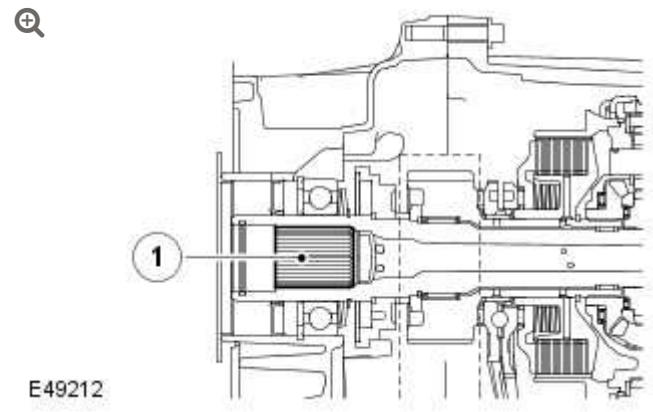

ITEM	DESCRIPTION
1	Input shaft spline

DIAGNOSTICS

The transfer box control module can store fault codes, which can be retrieved using a Land Rover approved diagnostic system.

The information is communicated via a diagnostic socket.

The diagnostic socket allows the exchange of information between the various control modules on the bus systems and the Land Rover approved diagnostic system or another suitable diagnostic tool. The information is communicated to the socket via the CAN bus. This allows the retrieval of diagnostic information and programming of certain functions using the Land Rover approved diagnostic system.

The transfer box control module uses Diagnostic Trouble Codes (DTC), which relate to transfer box electrical faults.

CLUTCH AND RANGE CHANGE MECHANISM CALIBRATION

In order for the range change mechanism to function correctly, the transfer box control module must be calibrated to the mechanical dimensions of the transfer box that it is connected to.

This procedure is required if one of the following occurs:

- The switch is changed
- The transfer box control module is changed
- The transfer box or range position sensor is changed
- Vehicle or transfer box control module fault has caused the transfer box to revert to an undefined range.

Calibration can be carried out using the Land Rover approved diagnostic system.

SYSTEM OPERATION

The selection of high/low range is achieved by using a switch located behind the main ETS in the floor console. A range change can only be performed when the ETS is in neutral (position 'N'). The accelerator pedal must not be depressed when a range change is in progress.

If high or low range is requested and the ETS is in a position other than 'N' or 'P', the instrument cluster message center will display 'SELECT NEUTRAL FOR RANGE CHANGE'.

NOTE:

If the transmission selector lever is in the 'P' position, the range change will not take place and the 'SELECT NEUTRAL FOR RANGE CHANGE' message will not be displayed in the message centre.

When low range is selected, the low range 'mountain' symbol will flash when the range change is taking place and then remain illuminated when the range change is complete. The instrument cluster message centre will display 'LOW RANGE SELECTED' for approximately 3 seconds followed by a chime from the instrument

cluster to confirm that the range change has been completed. Only 'D' and 'Manual mode' are available, the 'Sport mode' selection is not available.

When high range is selected, the low range 'mountain' symbol will flash when the range change is taking place and then extinguish when the range change is complete. The instrument cluster message centre will display 'HIGH RANGE SELECTED' for approximately 3 seconds followed by a chime from the instrument cluster to confirm that the range change has been completed.

The design of the transfer box allows range changes when the vehicle is moving, within set limitations as follows:

- High to Low – at speeds not exceeding 25 mph (40 km/h)
- Low to High – at speeds not exceeding 37 mph (60 km/h).

If the vehicle speed is higher than the parameters given, the instrument cluster message centre will display 'SPEED TOO HIGH FOR RANGE CHANGE'. When the correct speed range is reached, the message will be deleted and the range change will commence.

The transfer box control module interprets a road speed of less than 2 mph (3 km/h) as a static shift (vehicle not moving). In this instance, the driver must use the shift lock procedure of operating the brake pedal to allow the selector lever to be moved from 'N' to 'D' after the range change has been performed.

High range should be used for all normal road driving and also for off-road driving across dry, level terrain. Low range should only be required where low speed manoeuvring is necessary, such as reversing a trailer, negotiating steep slippery surfaces or boulder-strewn terrain. Low range should also be used for extreme off-road conditions where progress in high range cannot be maintained. Low range should never be used for normal road driving.

TERRAIN RESPONSE

Terrain Response Controls - All Models except 4.4L TDV8

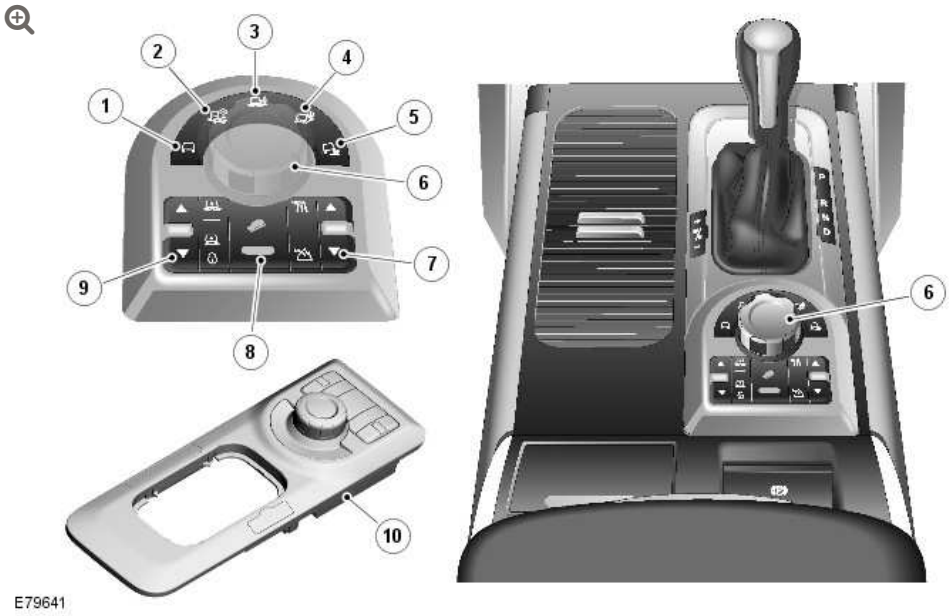

ITEM	DESCRIPTION
1	Special programs off
2	Grass/gravel/snow program
3	Mud/ruts program
4	Sand program
5	Rock/crawl program
6	Terrain Response rotary control
7	Transfer box high/low range switch
8	Hill Descent Control (HDC) switch
9	Air suspension switch
10	Selector lever cover

Terrain Response Controls - 4.4L TDV8 Models Only

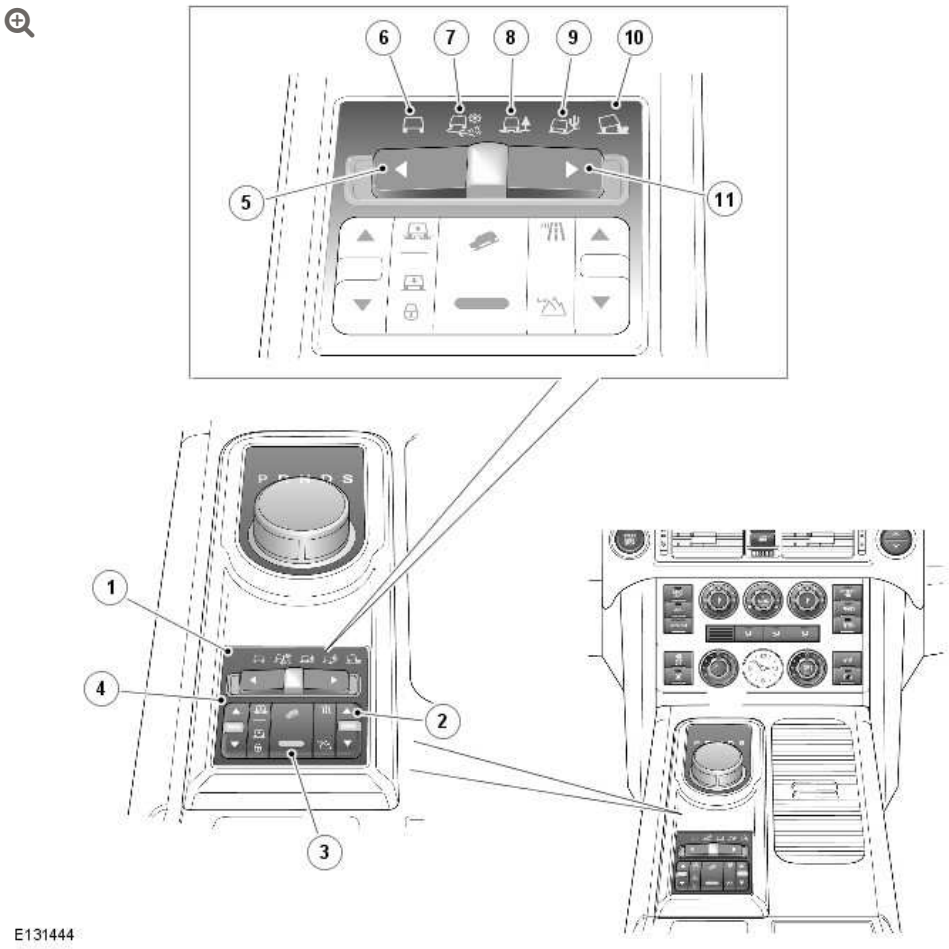

ITEM	DESCRIPTION
1	Terrain response control panel
2	Transfer box high/low range switch
3	Hill Descent Control (HDC) switch
4	Air suspension switch
5	Terrain response rocker switch - 'back' selection
6	Special programs off
7	Grass/gravel/snow program
8	Mud/ruts program
9	Sand program
10	Rock/crawl program
11	Terrain response rocker switch - 'forward' selection

The Terrain Response system allows the driver to select a program, which will provide the optimum settings for traction and performance for the prevailing terrain conditions.

The system is controlled by a rotary control located on the centre console. The rotary control allows the selection of one of 5 programs.

The Terrain Response system uses a combination of vehicle subsystems to achieve the required vehicle characteristics for the terrain selected. The following subsystems form the Terrain Response system:

- Engine management system
- Transmission
- Transfer box
- Rear locking differential (if fitted)
- Brake system
- Air suspension

Each subsystem control module provides a feedback for the selected program so that the Terrain Response control module can check that all systems are controlling the system correctly.
For additional information, refer to: Ride and Handling Optimization (204-06, Description and Operation).

HIGH RANGE OPERATION

In high range, the torque input from the transmission is passed to the transfer box input shaft. The position of the synchronizer sleeve couples the shaft directly to the differential housing. The differential splits the torque between the 2 side gears. One side gear is connected by splines and passes the torque to the rear output

flange. The second side gear is connected to the chain drive sprocket and passes the torque, via the chain, to the front output flange.

LOW RANGE OPERATION

In low range, the torque input from the transmission is passed to the transfer box input shaft. The synchroniser sleeve is moved and connects the planetary carrier to the differential housing. The torque from the transmission is now directed through the sun gear of the epicyclic gearset and, via the pinion gears and pinion gear shafts, into the planetary carrier. The annulus gear of the epicyclic gearset is secured inside the casing and generates the low range ratio of 2.93:1. The torque is then passed, via the synchroniser sleeve, to the differential housing where it is split between the 2 side gears. One side gear is connected by splines and passes the torque to the rear output flange. The second side gear is connected to the chain drive sprocket and passes the torque, via the chain, to the front output flange.

HIGH/LOW RANGE GEARS WITH SHIFT-ON-THE-MOVE

The driver is able to change between high and low range gears while the vehicle is moving, or if the vehicle is stationary.

Pressing the range change switch makes a range change request. This switch is located on the floor console behind the ETS. The driver requests a range change by pressing the range change switch in the high or low range positions.

The driver is informed of the range status via the green warning indicator lamp in the instrument cluster and LED's next to the range change switch. The warning indicator lamp will not be illuminated in high range, but is illuminated in low range and flashes during a range

change. There are 2 LED's on the range change switch; one for high range and one for low range. During a range change the new range LED will flash.

The vehicle will remain in the selected range unless the driver requests a change, i.e. it will not automatically revert to high range following an ignition off/on sequence.

RANGE CHANGE PROCEDURE

Neutral must be selected on the main transmission before requesting a range change and then select the appropriate gear following completion of the range change. During the range change the main transmission will be locked in neutral.

If neutral is not selected when a range change is requested then the request is denied and the driver will be advised to select neutral via the instrument cluster message centre.

The range change process can take up to 1 second to complete following a request being accepted.

There is a limit set on the maximum speed at which a range change can be achieved. The maximum speed for a high to low range change is 25 mph (40 km/h). The maximum speed for a low to high range change is 37 mph (60 km/h). If the vehicle speed is over the limit when a range change is selected then the request is denied and the instrument cluster message centre will display a 'SPEED TOO HIGH FOR RANGE CHANGE' message.

TRANSFER BOX CONTROL DIAGRAM

NOTE:

A = Hardwired; **D** = High speed CAN bus

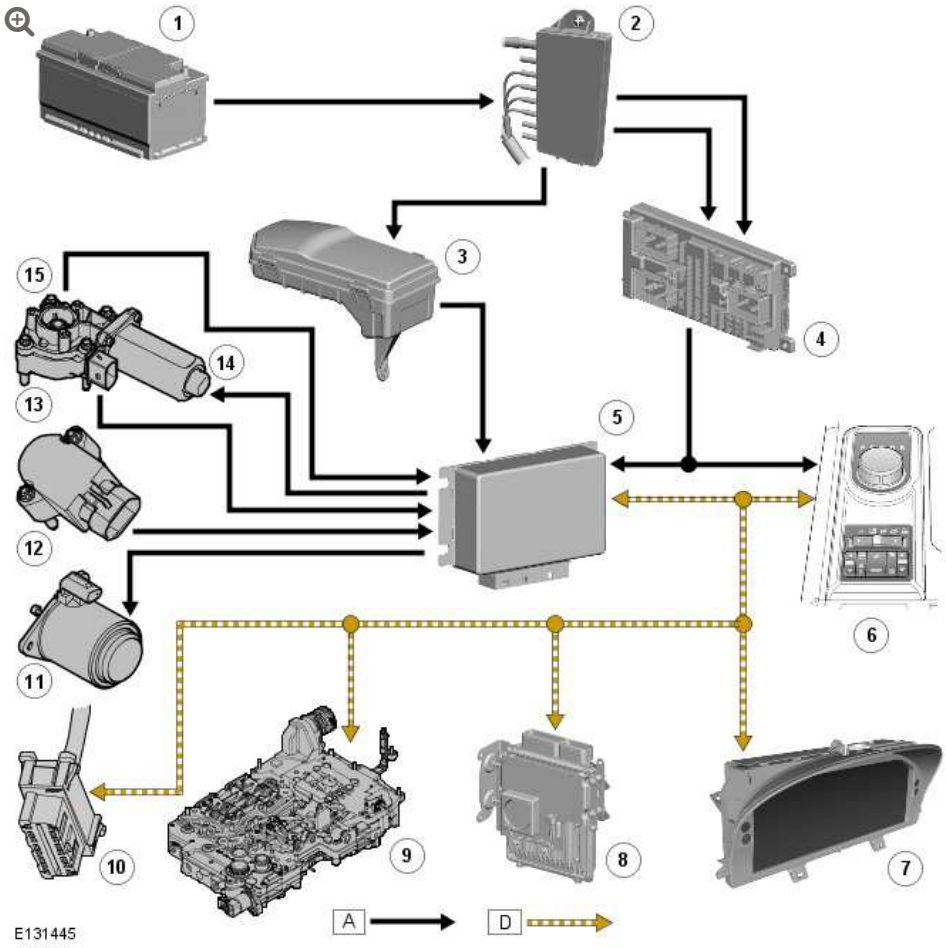

ITEM	DESCRIPTION
1	Diagnostic socket
2	Battery Junction Box (BJB)
3	Engine Junction Box (EJB)
4	Central Junction Box (CJB)
5	Transfer box control module
6	High/Low range selection switch (4.4L TDV8 shown, other models similar)
7	Instrument cluster

ITEM	DESCRIPTION
8	Engine Control Module (ECM) (4.4L TDV8 shown, other models similar)
9	Transmission Control Module (TCM) (4.4L TDV8 8 speed TCM shown, other models similar)
10	Diagnostic socket
11	Solenoid
12	High/low position sensor
13	Temperature sensor
14	Transfer box motor
15	Hall sensors (speed and direction)

FOUR-WHEEL DRIVE SYSTEMS

HIGH/LOW RANGE SENSOR (G1341830)

REMOVAL AND INSTALLATION

41.30.07	SENSOR - POSITION - HI/LOW RATIO - RENEW	ALL DERIVATIVES	0.2	USED WITHINS	+

SPECIAL TOOL(S)



HTJ1200-2

Power train assembly jack

REMOVAL

NOTE:

Some variation in the illustrations may occur, but the essential information is always correct.

1.

WARNING:

Make sure to support the vehicle with axle stands.

Raise and support the vehicle.

2.

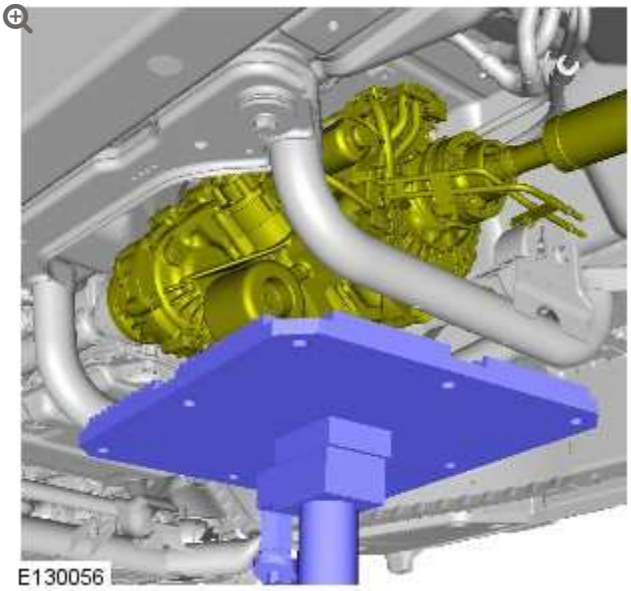

Using a transmission jack, support the transfer case.

3.

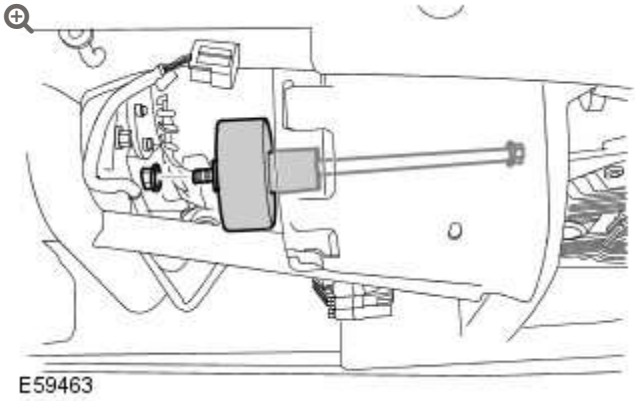

Remove the transmission support insulator nut, bolt and damper.

4.

CAUTIONS:

- To avoid damage to the joints or gaiters, do not allow the transmission to hang on the driveshafts.
- Discard the bolts.

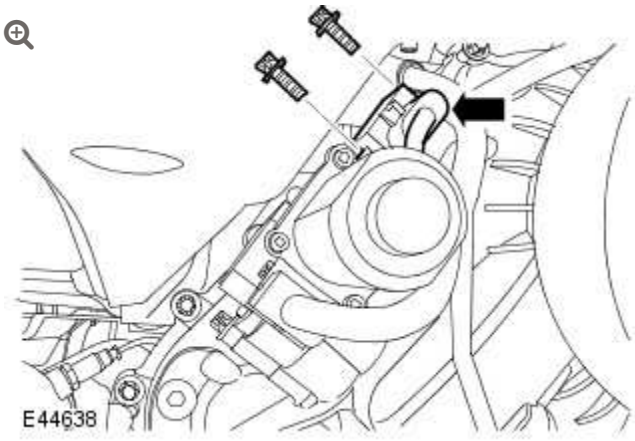

Remove the high/low range sensor.

- Lower the transmission.
- Disconnect the electrical connector.
- Remove the 2 Torx bolts.

INSTALLATION

1. **CAUTION:**

   Make sure that new bolts are installed.

   Install the high/low range sensor.

   - Clean the components.
   - Tighten the new Torx bolts to 5 Nm (4 lb.ft).
   - Connect the electrical connector.

2. Install the transmission support insulator nut, bolt and damper.
   - Raise the transmission.
   - Tighten the bolt to 115 Nm (85 lb.ft).
   - Remove the transmission jack.

3. Connect the Land Rover approved diagnostic equipment.
   1. Start the service function **transfer case-absolute position sensor replacement.**
   2. Clear any Diagnostic Trouble codes (DTCs) after calibration and check for correct operation.

FOUR-WHEEL DRIVE SYSTEMS

TRANSFER CASE CLUTCH SOLENOID (G1549892)

REMOVAL AND INSTALLATION

41.30.08	SOLENOID - CLUTCH CONTROL - RENEW	ALL DERIVATIVES	0.3	USED WITHINS	+

REMOVAL

1. **WARNING:**

   Make sure to support the vehicle with axle stands.

   Raise and support the vehicle.

2. Drain the transfer case.
   Refer to: Transfer Case Draining and Filling (308-07B Transfer Case, General Procedures).

3.

CAUTION:

Connect the diagnostic tool, prior to removal of the solenoid. Carry out the diagnostic service function **transfer case – solenoid replacement**.

NOTES:

- Some fluid spillage is inevitable during this operation.
- Note the orientation of the electrical connector prior to removal.

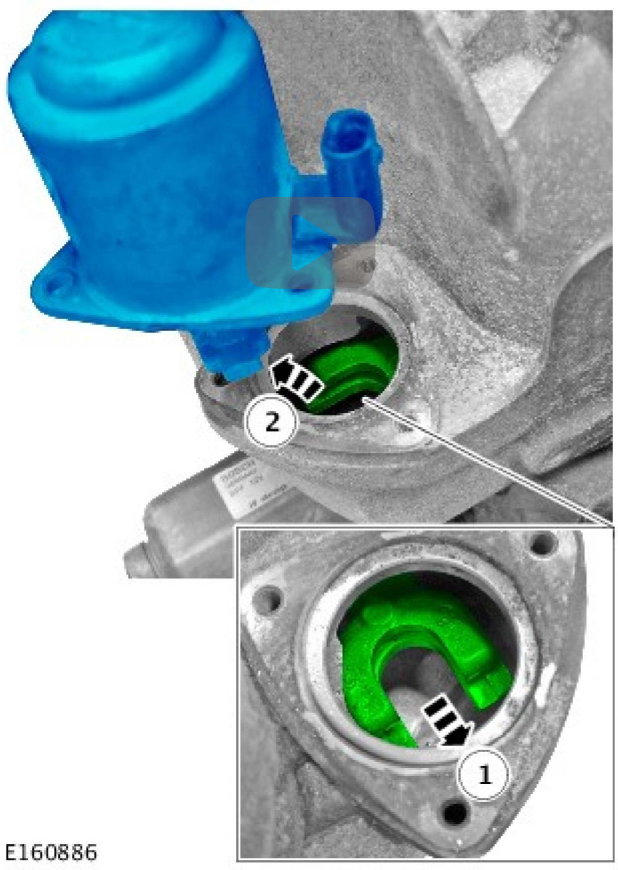

4.

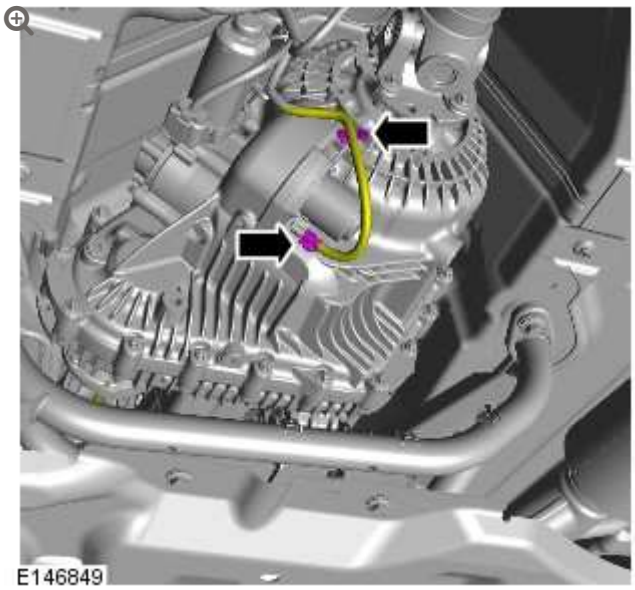

INSTALLATION

1.

CAUTIONS:

- Failure to energise the solenoid to aid installation of the arm, may result in damage to the shift fork once the component is installed and the system is operated.
- Make sure the seal is installed correctly.
- Make sure that new bolts are installed.
- Make sure that the electrical connector is installed in the correct orientation as noted in the removal step.
- Make sure that the component sits flush to the transfer case.

NOTE:

Tighten the retaining bolts evenly and progressively.

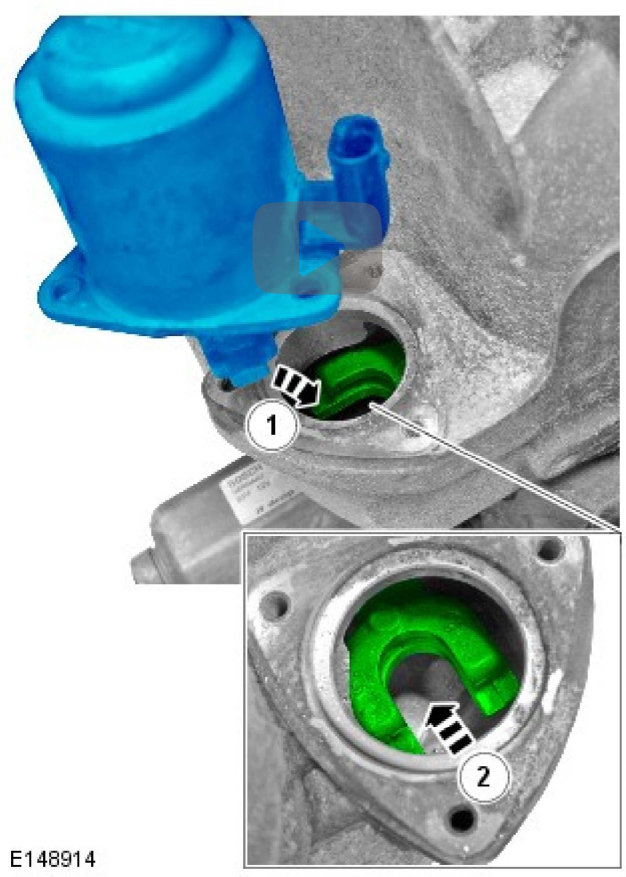

Connect the electrical connector and energise the solenoid (use the service function **transfer case – solenoid replacement** to assist with energising the solenoid) to allow the arm to extend and correctly locate into the shift fork.
Torque: **5 Nm**

2.

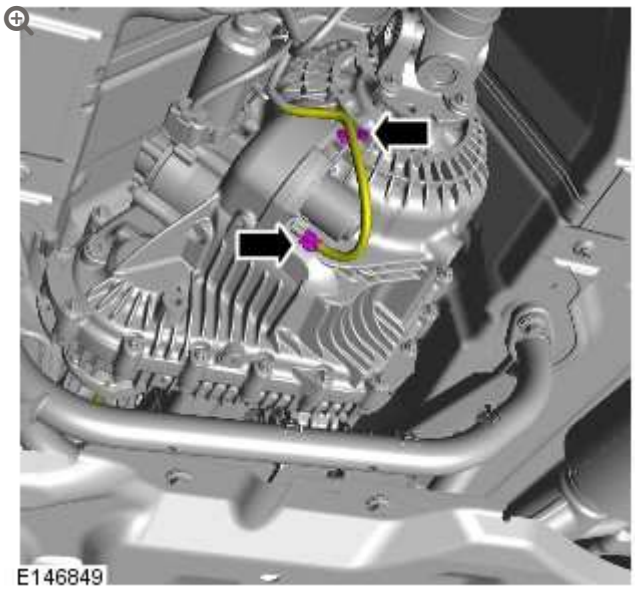

3. Fill the transfer case.
   Refer to: Transfer Case Draining and Filling (308-07B Transfer Case, General Procedures).

4. Using the approved diagnostic equipment, clear all diagnostic trouble code(s) (DTCs) and check for correct operation.

FOUR-WHEEL DRIVE SYSTEMS

TRANSFER CASE SHIFT MOTOR (G1341829)

REMOVAL AND INSTALLATION

41.30.03	MOTOR - RATIO CONTROL - RENEW	5000 CC, AJ V8	0.3	USED WITHINS	+

SPECIAL TOOL(S)



1200-2

Powertrain Assembly Jack, HTJ

REMOVAL

NOTE:

Some variation in the illustrations may occur, but the essential information is always correct.

1.

WARNING:

Make sure to support the vehicle with axle stands.

Raise and support the vehicle.

2.

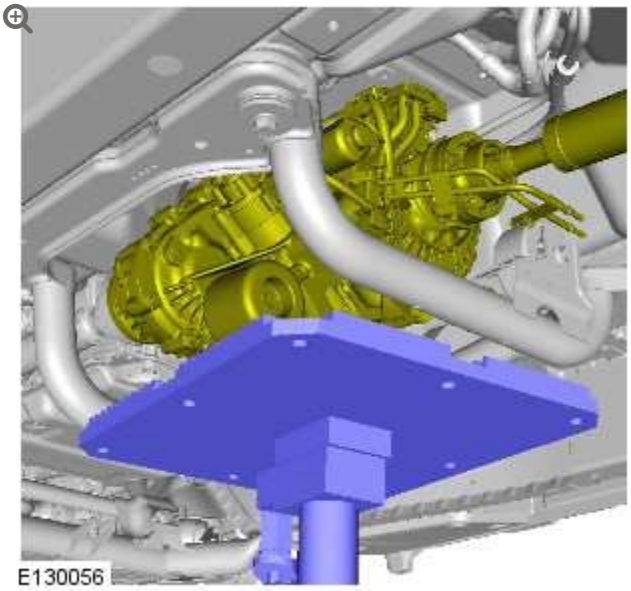

Using a transmission jack, support the transfer case.

3.

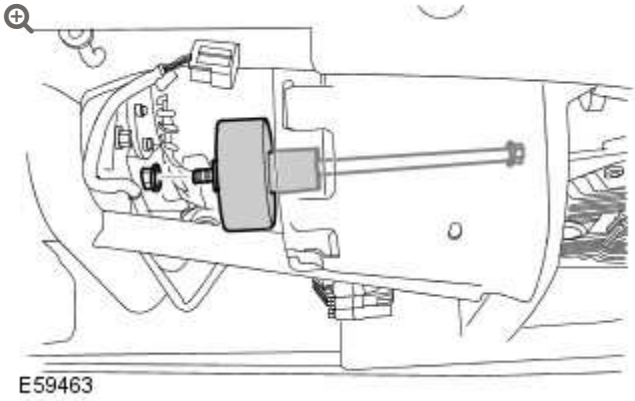

Remove the transmission support insulator nut, bolt and damper.

4.

CAUTIONS:

- To avoid damage to the joints or gaiters, do not allow the transmission to hang on the driveshafts.
- Discard the bolts.

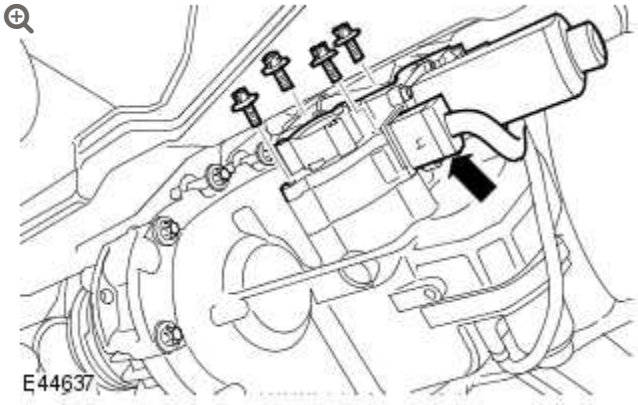

Remove the shift motor.

- Lower the transmission.
- Disconnect the electrical connector.
- Remove the 4 Torx bolts.

INSTALLATION

1. **CAUTION:**

   Make sure that new bolts are installed.

   Install the shift motor.

   - Clean the components.
   - Tighten the Torx bolts to 35 Nm (26 lb.ft).
   - Connect the electrical connector.

2. Install the transmission support insulator nut, bolt and damper.

   - Raise the transmission.
   - Tighten the nut and bolt to 115 Nm (85 lb.ft).
   - Remove the transmission jack.

3. Connect the Land Rover approved diagnostic equipment.

   1. Start the diagnostic service function **transfer case-transfer case replacement.**
   2. Clear any Diagnostic Trouble Codes (DTCs) after calibration and check for correct operation.

TRANSFER CASE

SPECIFICATIONS

Sealers and Lubricants

ITEM	SPECIFICATION
* Recommended oil	Shell TF 0753
Capacity - Wet and dry fill	1.5 litres, (2.6 pints) (1.5 US quarts)
Input shaft splines grease	Weicon TL7391

CAUTION:

* Do not use any lubricant other than that specified

ITEM	SPECIFICATION
Model	DD295
Type	Two speed, permanent four wheel drive transfer box having synchronised shift on the move facility with an actively controlled wet clutch and 50/50 torque split across the centre differential
Clutch type	Wet, multi-plate
Maximum torque capacity	2500 Nm (1842.5 lb-ft)
Ratios:	
High	1:1

ITEM	SPECIFICATION
Low	2.93:1
Maximum shift speeds:	
High to low ratio	40 kph (24.8 mph)
Low to high ratio	60 kph (37.2 mph)

Torque Specifications

DESCRIPTION	NM	LB-FT
Transfer case fluid drain plug M16	22	16
Transfer case fluid filler/level plug M16	22	16
Transfer case fluid drain plug M18	28	21
Transfer case fluid filler/level plug M18	28	21
Transmission support insulator to transfer case bolts	60	44
Transfer case to transmission bolts	45	33
+ Transfer case shift motor bolts	35	26
+ Transfer case clutch control solenoid bolts	5	4
+ Transfer case high / low range sensor bolts	5	4
*** Front driveshaft to transfer case output flange:**		
Stage 1	45	33
Stage 2	Further 90°	Further 90°

*** New 'patched' Torx bolts must be installed**

+ New bolts must be used when a new component is installed

TRANSFER CASE

TRANSFER CASE – V8 5.0L PETROL/V8 S/C 5.0L PETROL (G1345573)

REMOVAL

41.20.25.99	TRANSFER GEARBOX - REMOVE FOR ACCESS AND REFIT	5000 CC, AJ V8	2.1	USED WITHINS	+
44.24.02	LUBRICATION SYSTEM – DRAIN AND REFILL	5000 CC, AJ V8	0.9	USED WITHINS	
86.54.14	SENSOR – PARKING AID – REAR – EACH – RENEW	ALL DERIVATIVES	0.1	USED WITHINS	+

REMOVAL

SPECIAL TOOL(S)



303–1069

Adapter, Wrench

GENERAL EQUIPMENT

EQUIPMENT NAME
Transmission jack
Vehicle/axle stands
Wooden Block

1. **WARNING:**

   Make sure to support the vehicle with axle stands.

   Raise and support the vehicle.

2.

NOTE:

Do not carry out this step if the component removed for access only.

Refer to: Transfer Case Draining and Filling (308-07B Transfer Case, General Procedures).

3. Refer to: Transmission Support Crossmember - V8 5.0L Petrol/V8 S/C 5.0L Petrol (502-02 Full Frame and Body Mounting, Removal and Installation).

4. **CAUTIONS:**

- Mark the position of the driveshaft flange in relation to the drive pinion flange.
- To avoid damage to the joint or gaiter, do not allow the driveshaft to hang.

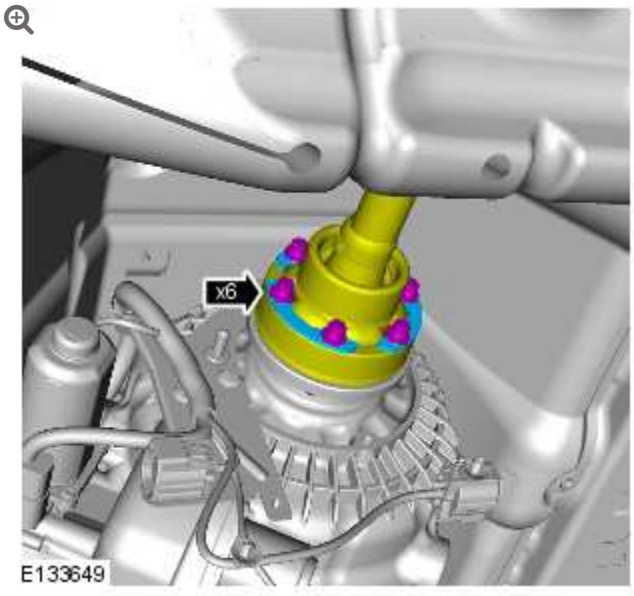

- Remove the 6 Torx bolts and washers.

5. **NOTE:**

Components removed for clarity.

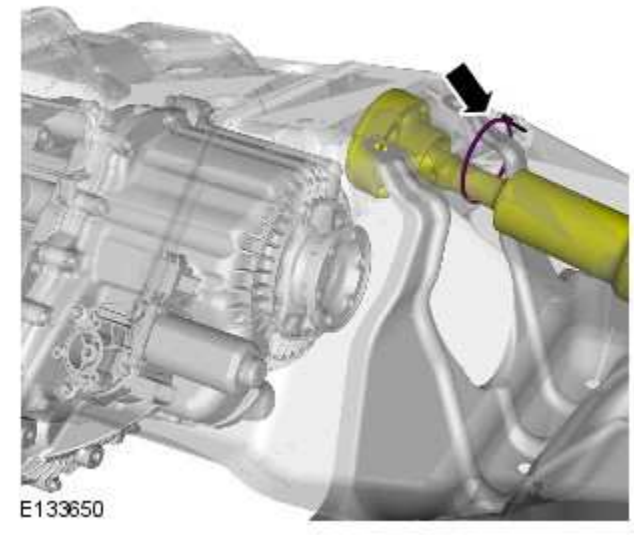

- Using a suitable tie strap, secure the driveshaft above the transfer case.

6. **CAUTIONS:**

- Mark the position of the driveshaft flange in relation to the drive pinion flange.
- To avoid damage to the joint or gaiter, do not allow the driveshaft to hang.
- Discard the bolts.

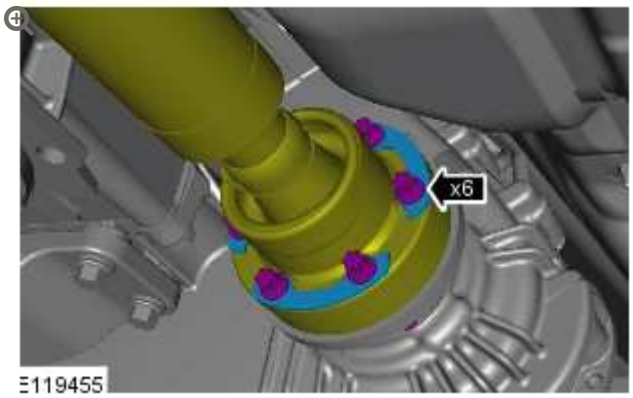

7.

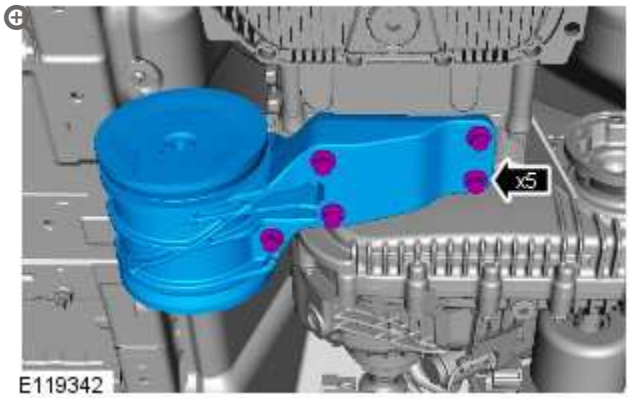

8.

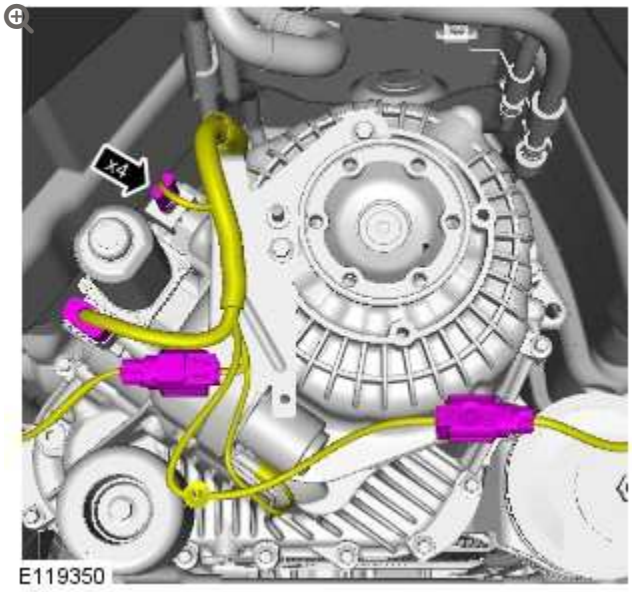

9.

CAUTION:

Always plug any open connections to prevent contamination.

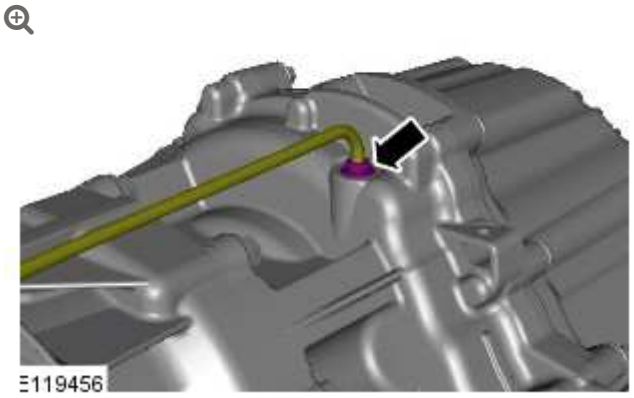

10.

WARNING:

Secure the component to the transmission jack.

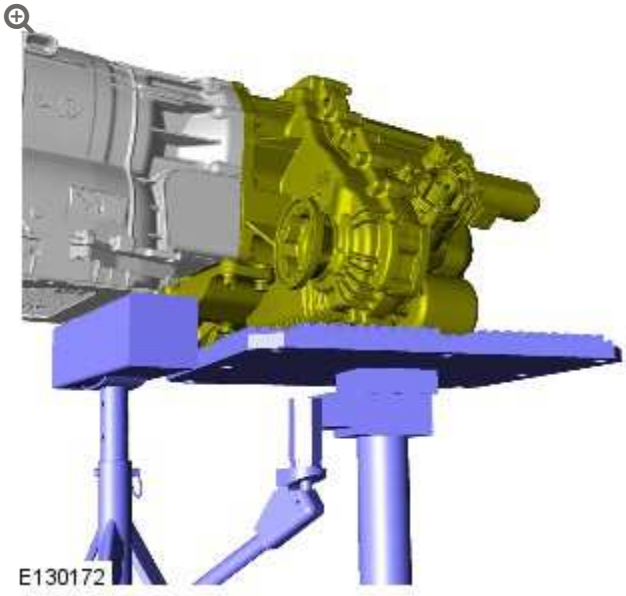

- *General Equipment:* Transmission jack

- *General Equipment:* Vehicle/axle stands
- *General Equipment:* Wooden Block

11.

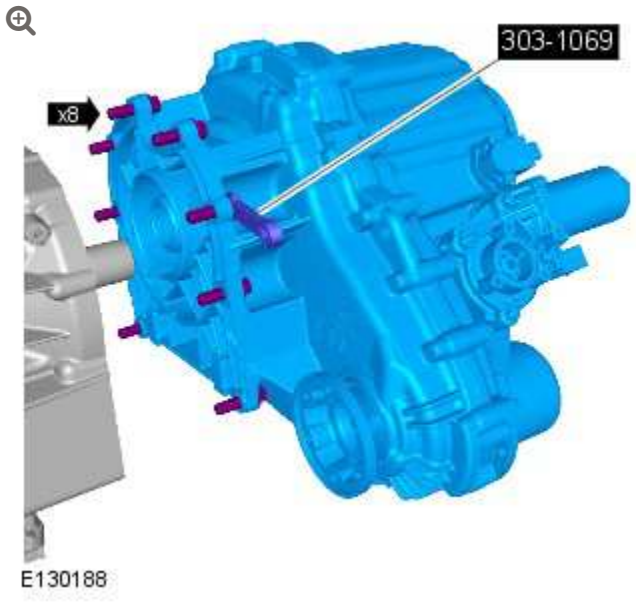

Special Tool(s): 303-1069

12.

CAUTION:

Do not carry out this step if a new transfer box is to be installed.

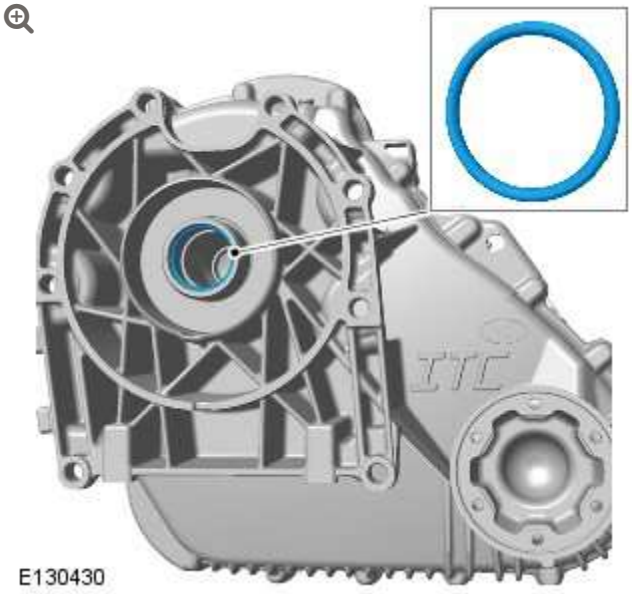
E130430

TRANSFER CASE – V8 5.0L PETROL/V8 S/C 5.0L PETROL (G1345574)

INSTALLATION

41.20.25.99	TRANSFER GEARBOX - REMOVE FOR ACCESS AND REFIT	5000 CC, AJ V8	2.1	USED WITHINS	+
44.24.02	LUBRICATION SYSTEM – DRAIN AND REFILL	5000 CC, AJ V8	0.9	USED WITHINS	
86.54.14	SENSOR – PARKING AID – REAR – EACH – RENEW	ALL DERIVATIVES	0.1	USED WITHINS	+

INSTALLATION

SPECIAL TOOL(S)



303–1069

Adapter, Wrench

GENERAL EQUIPMENT

EQUIPMENT NAME
Transmission jack
Vehicle/axle stands
Wooden Block

1.

NOTE:

This step is only required if previously removed.

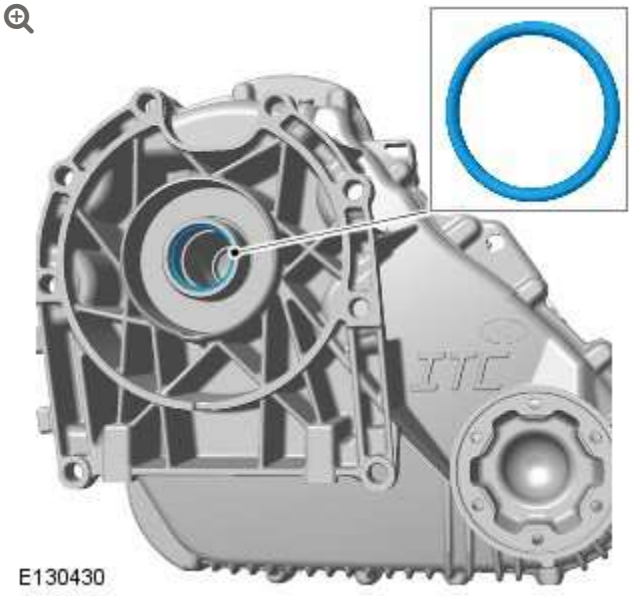

2.

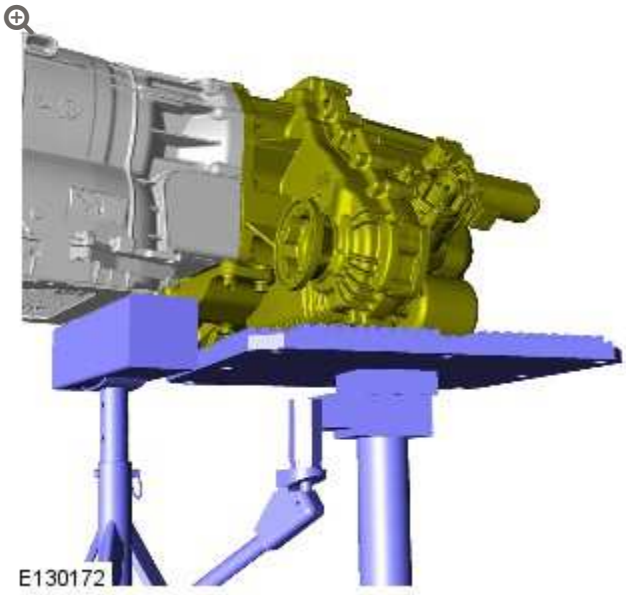

- Clean the component mating faces.
- Lubricate input shaft splines with 'Weicon TL7391' grease.
- *General Equipment:* Transmission jack
- *General Equipment:* Vehicle/axle stands
- *General Equipment:* Wooden Block

3.

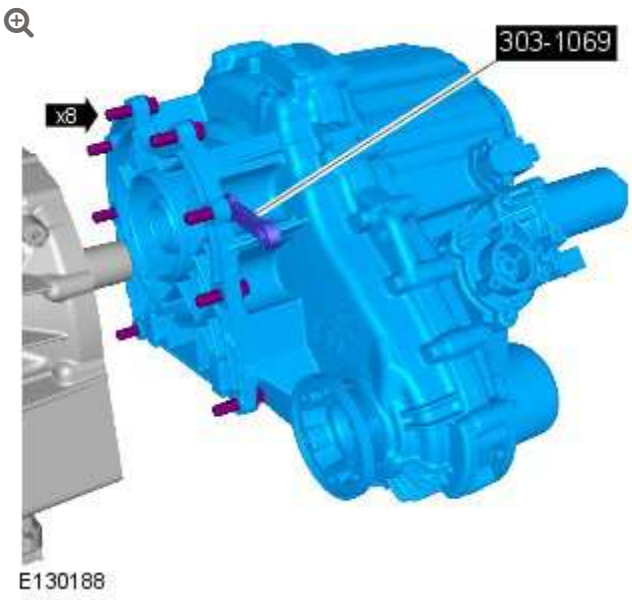

- *Special Tool(s):* 303-1069
- *Torque:* **45 Nm**

4.

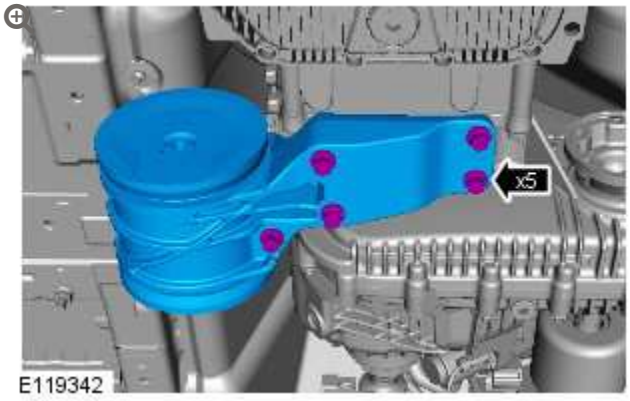

Torque: **60 Nm**

5.

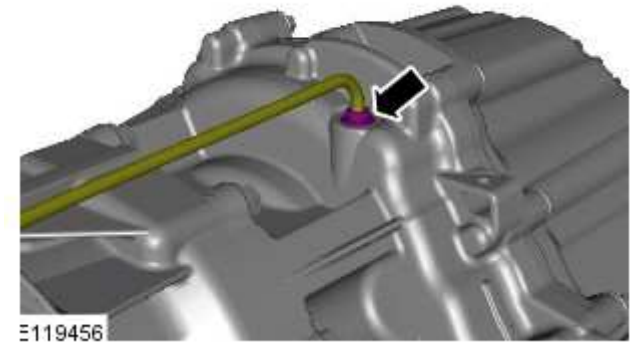

6.

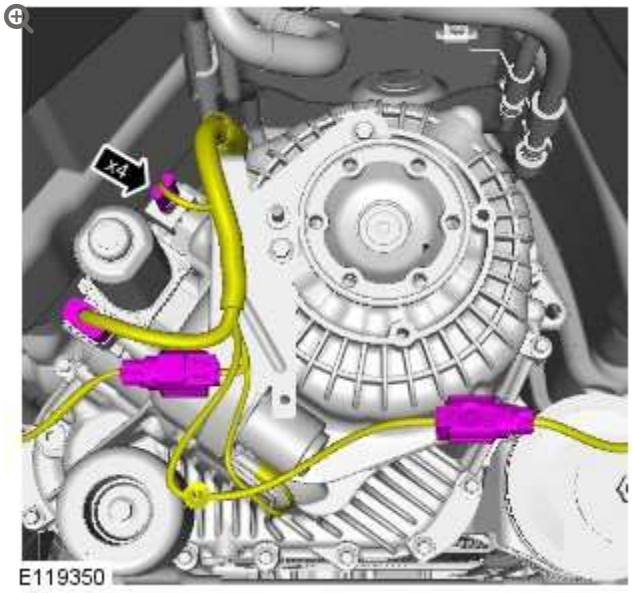

7.

NOTE:

A small amount of oil may weep from the driveshaft joints during storage. The loss of this oil will not affect the operation or durability of the joint.

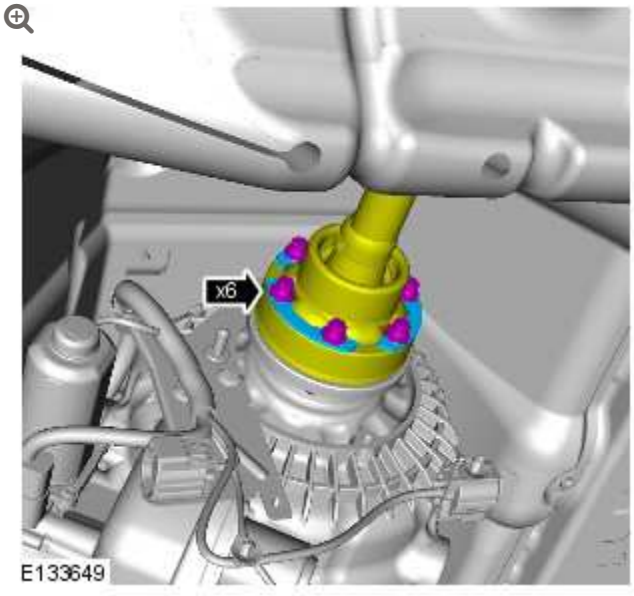

- Clean the component mating faces.
- *Torque:*

  Stage 1 **44 Nm**

  Stage 2 **45°**

8. **CAUTION:**

   Make sure that new bolts are installed.

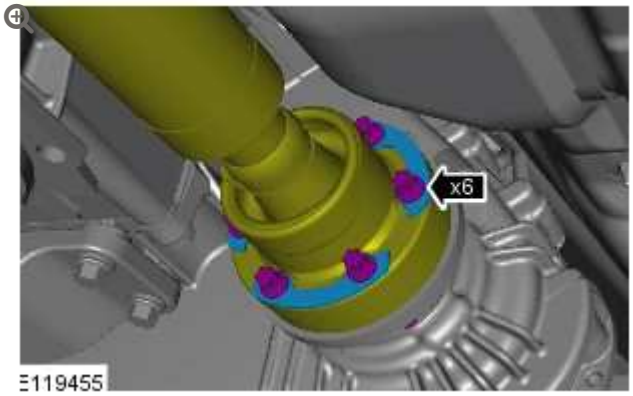

Torque:

Stage 1 **45 Nm**

Stage 2 **90°**

9. Refer to: Transmission Support Crossmember - V8 5.0L Petrol/V8 S/C 5.0L Petrol (502-02 Full Frame and Body Mounting, Removal and Installation).

10. **NOTE:**

> Do not carry out this step if the component removed for access only.

Refer to: Transfer Case Draining and Filling (308-07B Transfer Case, General Procedures).

11. **NOTE:**

> Do not carry out this step if the component removed for access only.

1. Connect the Land Rover approved diagnostic equipment.
2. Start the diagnostic service function **transfer case-transfer case replacement.**
3. Clear any Diagnostic Trouble Codes (DTCs) after calibration and check for correct operation.

TRANSFER CASE CHAIN

(G1704925)

REMOVAL AND INSTALLATION

REMOVAL

1. Refer to: Specifications (414-00 Battery and Charging System - General Information, Specifications).

2. Refer to: Transfer Case - V8 5.0L Petrol/V8 S/C 5.0L Petrol (308-07B Transfer Case, Removal).
   Refer to: Transfer Case - TDV8 3.6L Diesel (308-07B, Removal).
   Refer to: Transfer Case - TDV8 4.4L Diesel (308-07B, Removal).

3. With assistance, secure the transfer case with it's transmission mating face down on a flat surface.

4.

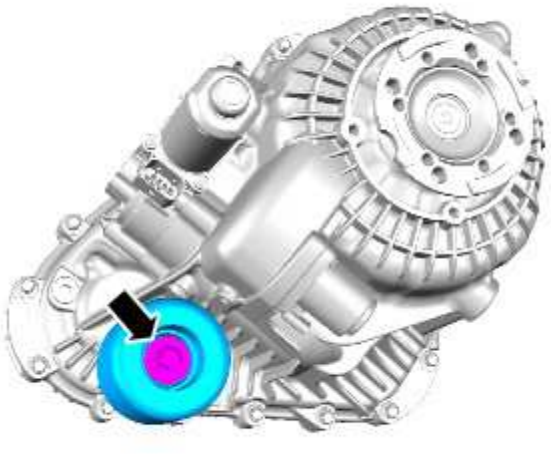

E159189

5.

WARNING:

Eye protection must be worn.

CAUTION:

Make sure the bolt holes are clean and free from swarf.



6.

WARNING:

Eye protection must be worn.

CAUTION:

Make sure the bolt holes are clean and free from swarf.



E159191

7. **CAUTION:**

> Care must be taken when turning the transfer case over. The transfer case halves must not be allowed to separate.

With assistance, release the transfer case and secure with the rear face of the transfer case facing down on a flat surface.

8. **CAUTION:**

> Care must be taken to avoid damaging the mating surfaces.



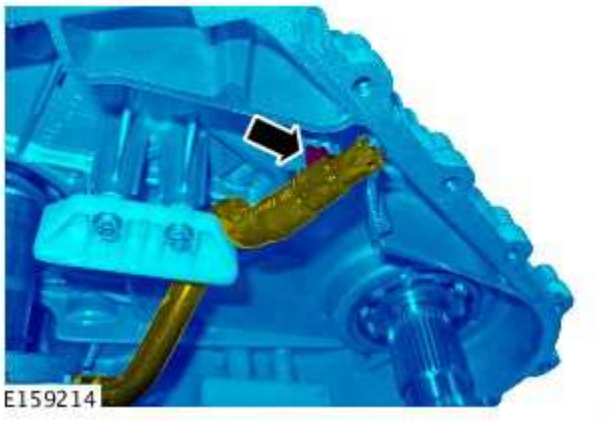

Using a soft faced mallet, release the front casing.

9.



10.

CAUTION:

> The shaft may be tight on the bearing. Care must be taken when removing the component.

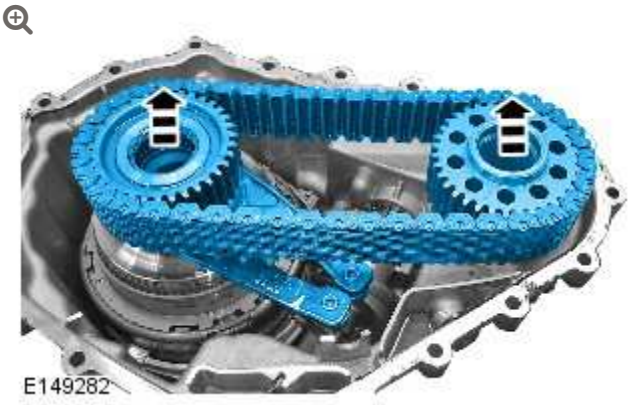

INSTALLATION

1.

CAUTION:

> Make sure that the front driveshaft gear bearing is fully seated before installing the new chain and gear.

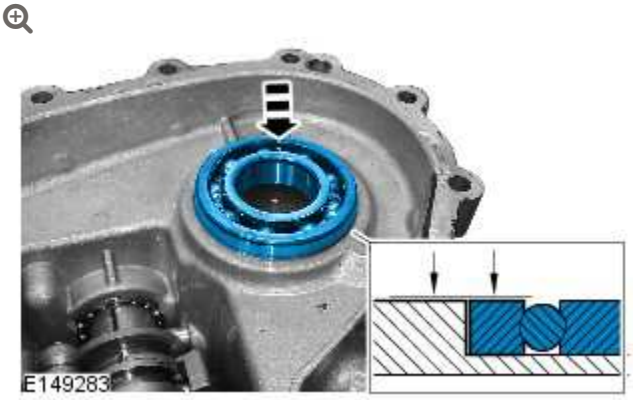

2.

CAUTION:

Make sure that the clutch assembly is correctly located as illustrated.

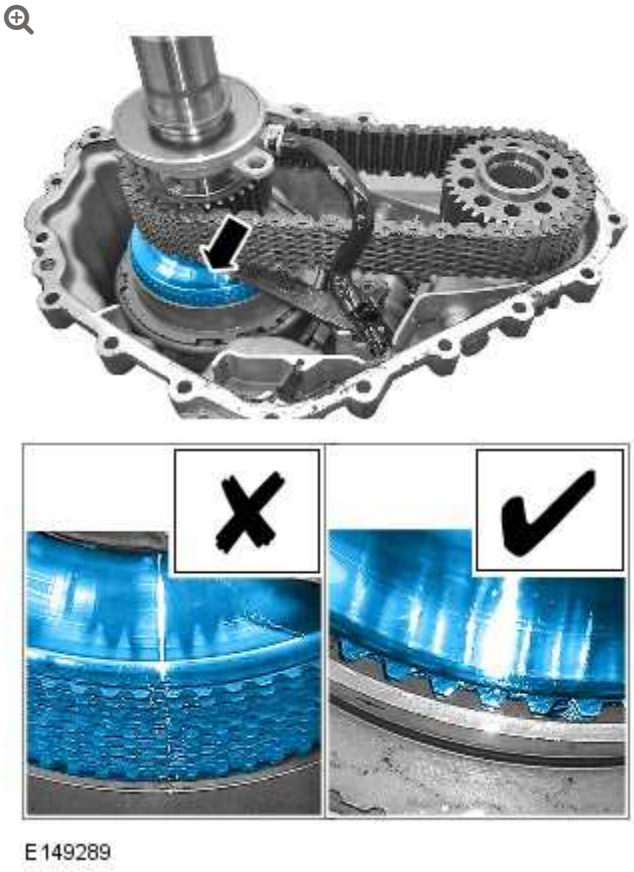

E149289

3.

CAUTION:

Make sure that the clutch assembly is correctly located as illustrated.



4.

CAUTION:

Make sure that the chain is installed with the chain link facing down.

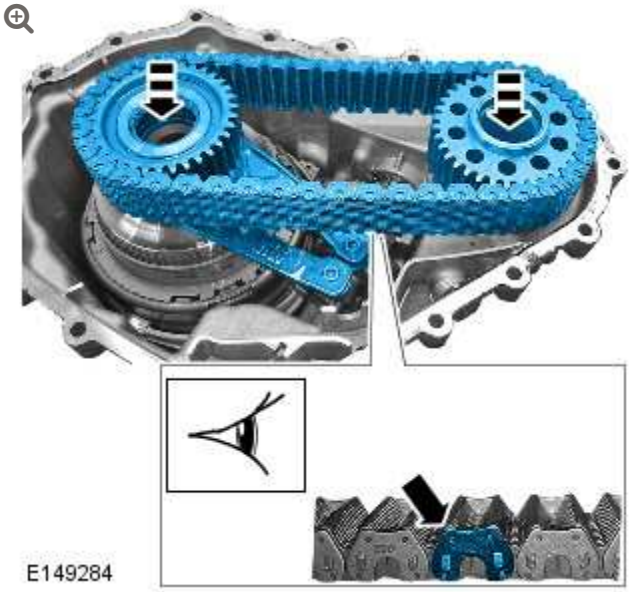

5.

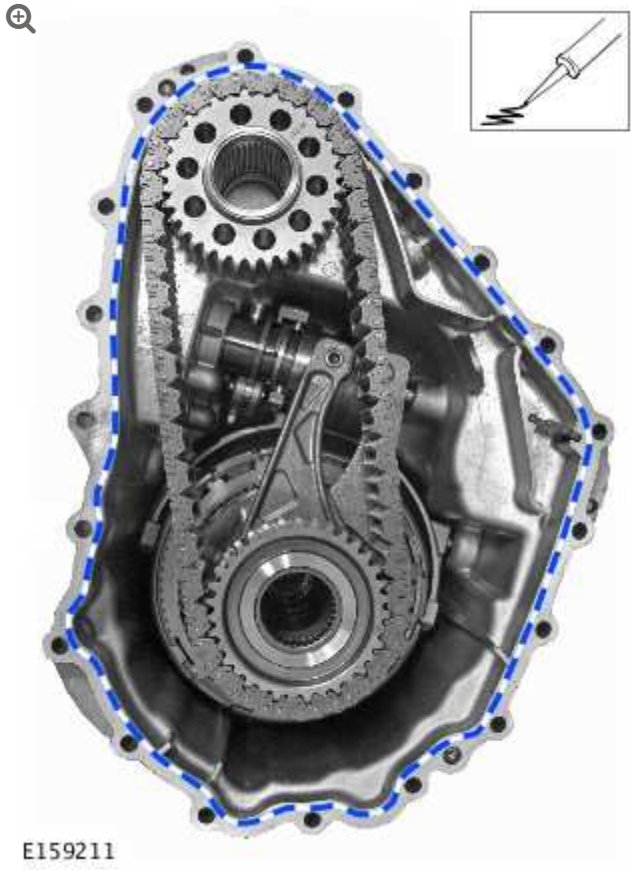

Apply a 2mm bead of sealant to one surface of the transfer case mating faces, as shown.

6.

CAUTIONS:

- Make sure that the input shaft spacer is correctly located.
- The input shaft and fluid pump assembly must be supported and held in place by hand, until it is located securely into the clutch assembly.

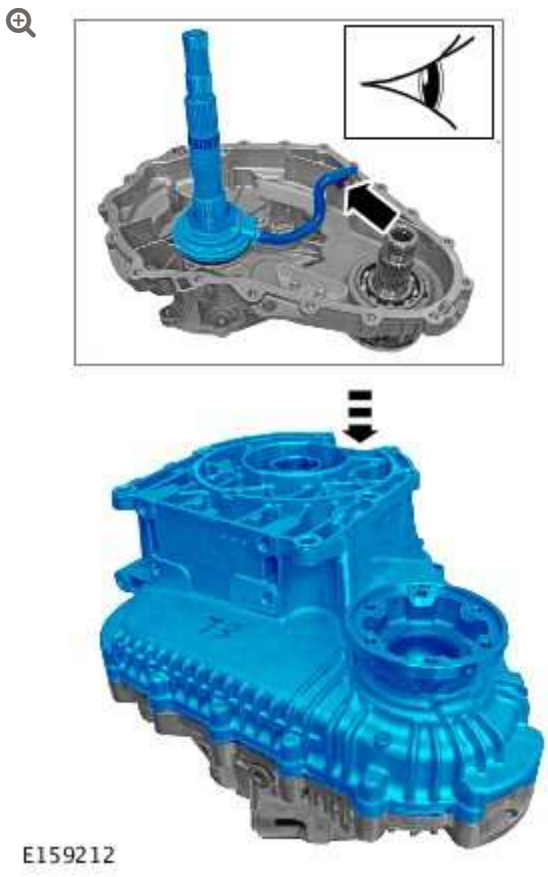

Install the front half of the case.

7. **CAUTION:**

> Care must be taken when turning the transfer case over. The transfer case halves must not be allowed to separate.

With assistance, release the transfer case and secure with it's transmission mating face down on a flat surface.

8. **CAUTION:**

> Only tighten the bolts finger-tight at this stage.



E159191

9.



E159409

Torque: **10 Nm**

10.



E159191

Torque: **35 Nm**

11.



E159190

Torque: **35 Nm**

12.

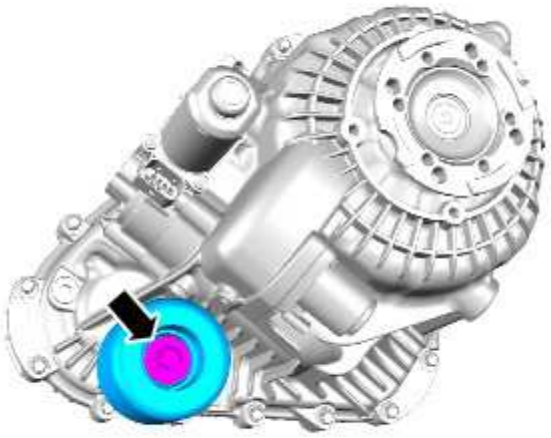

E159189

Torque: **75 Nm**

13. Refer to: Transfer Case - V8 5.0L Petrol/V8 S/C 5.0L Petrol (308-07B Transfer Case, Installation).
    Refer to: Transfer Case - TDV8 3.6L Diesel (308-07B, Installation).
    Refer to: Transfer Case - TDV8 4.4L Diesel (308-07B, Installation).

14. Refer to: Specifications (414-00 Battery and Charging System - General Information, Specifications).

TRANSFER CASE

TRANSFER CASE DRAINING AND FILLING

(G510664)

GENERAL PROCEDURES

41.20.04	TRANSFER GEARBOX DRAIN AND REFILL	ALL DERIVATIVES	0.2	USED WITHINS

All vehicles

1. **WARNING:**

   Do not work on or under a vehicle supported only by a jack. Always support the vehicle on safety stands.

   Raise and support the vehicle.

2. Position a container to collect the fluid.

Vehicles with petrol engine

3.

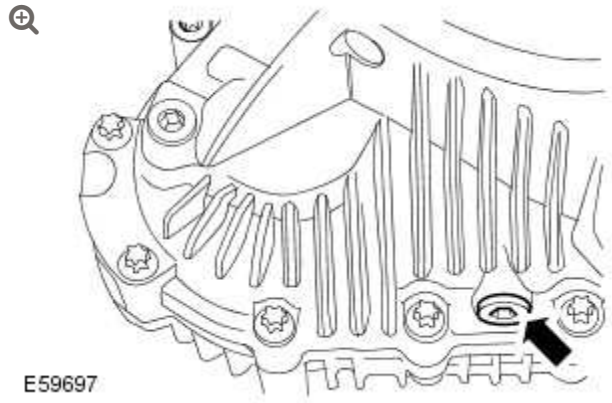

Remove the fluid drain plug.

- Clean the immediate area.
- Remove and discard the sealing washer.

	Vehicles with diesel engine

4.



Remove the fluid drain plug.

- Clean the immediate area.
- Remove and discard the sealing washer.

	All vehicles

5. Allow the fluid to drain.

	Vehicles with petrol engine

6. Install the drain plug and tighten it to; M16 plug: 22 Nm (16 lb.ft), M18 plug: 28 Nm (21 lb ft).
   - Clean the component mating faces.
   - Install a new sealing washer.

	Vehicles with diesel engine

7. Install the drain plug and tighten it to; M16 plug: 22 Nm (16 lb.ft), M18 plug: 28 Nm (21 lb ft).
   - Clean the component mating faces.
   - Install a new sealing washer.

	Vehicles with petrol engine

8. 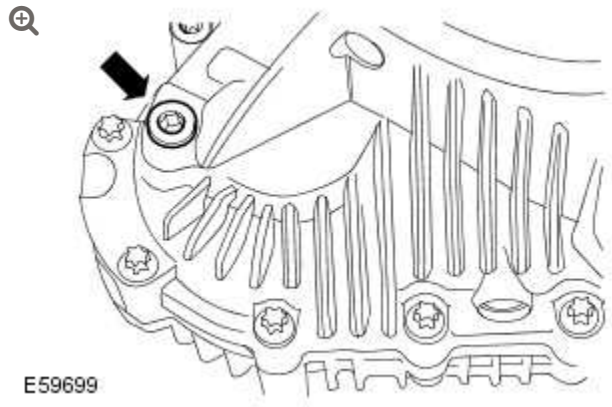

   Remove the fluid filler/level plug.
   - Clean the immediate area.
   - Remove and discard the sealing washer.

	Vehicles with diesel engine

9. 

Remove the fluid filler/level plug.

- Clean the immediate area.
- Remove and discard the sealing washer.

	All vehicles

10. Refill transfer case with the recommended fluid, until the fluid is level with bottom of filler/level plug hole.

	Vehicles with petrol engine

11. Install the fluid filler/level plug and tighten to; M16 plug: 22 Nm (16 lb.ft), M18 plug: 28 Nm (21 lb ft).

- Clean the component mating faces.
- Install a new sealing washer.

	Vehicles with diesel engine

12. Install the fluid filler/level plug and tighten to; M16 plug: 22 Nm (16 lb.ft), M18 plug: 28 Nm (21 lb ft).

- Clean the component mating faces.
- Install a new sealing washer.

TRANSFER CASE FRONT OUTPUT SEAL (G1707005)

REMOVAL AND INSTALLATION

SPECIAL TOOL(S)



205-818

Installer, Seal



308-620

Installer, Seal



308-636

Installer



JLR-308-926

Support Tool, Transfer Case



JLR-308-933

Remover, Transfer Case Flange

REMOVAL

NOTE:

Some variation in the illustrations may occur, but the essential information is always correct.

1. **WARNING:**

   Do not work on or under a vehicle supported only by a jack. Always support the vehicle on safety stands.

   Raise and support the vehicle.

2. Refer to: Transfer Case Draining and Filling (308-07B Transfer Case, General Procedures).

3. Refer to: Transfer Case - V8 5.0L Petrol/V8 S/C 5.0L Petrol (308-07B Transfer Case, Removal).
   Refer to: Transfer Case - TDV8 3.6L Diesel (308-07B, Removal).
   Refer to: Transfer Case - TDV8 4.4L Diesel (308-07B, Removal).

4. With assistance, secure the transfer case with it's transmission mating face down on a flat surface.

5.

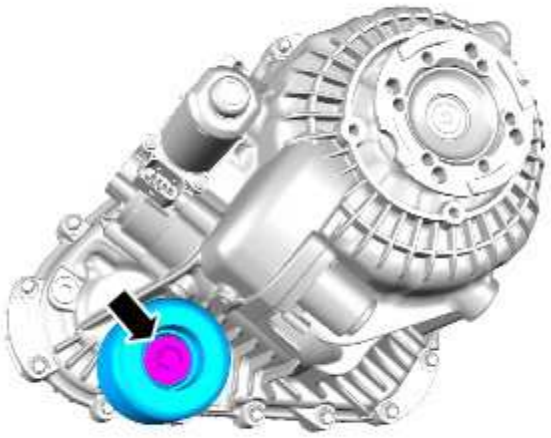

E159189

6.

WARNING:

Eye protection must be worn.

CAUTION:

Make sure the bolt holes are clean and free of swarf.



7.

WARNING:

Eye protection must be worn.

CAUTION:

Make sure the bolt holes are clean and free of swarf.



E159191

8. **CAUTION:**

> Care must be taken when turning the transfer case over. The transfer case halves must not be allowed to separate.

With assistance, release the transfer case and secure with the rear face of the transfer case facing down on a flat surface.

9. **CAUTION:**

> Care must be taken to avoid damage to the mating surfaces.



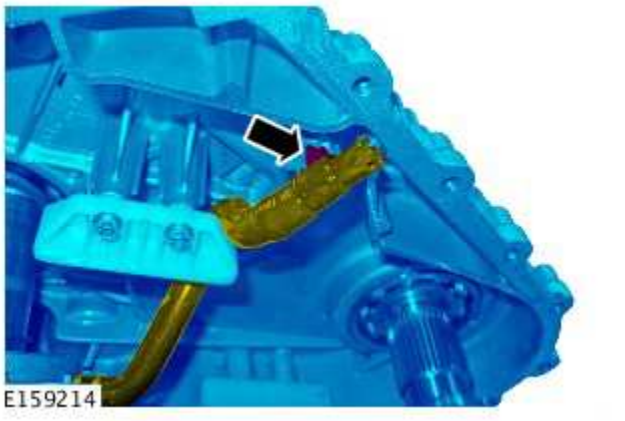

Using a soft faced mallet, release the front casing.

10. Remove the sealant from the transfer case mating faces.

11.



12.

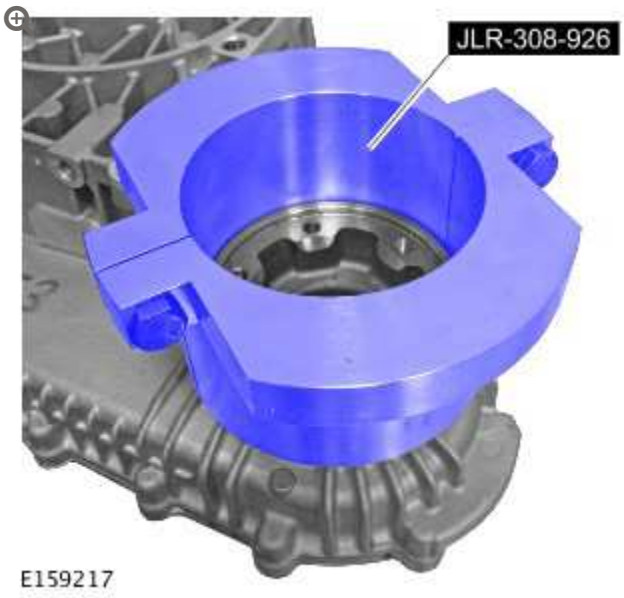

Special Tool(s): JLR-308-926

13.

CAUTION:

Make sure that the special tool is correctly located. This will make sure that the snap ring is fully compressed during the next step.

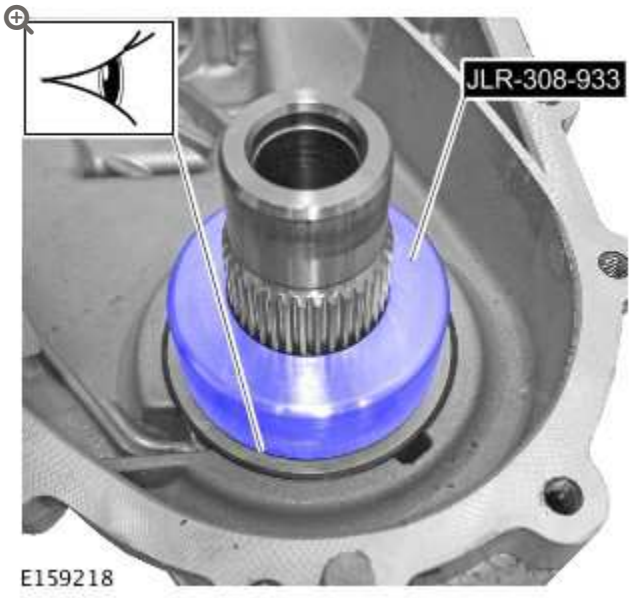

Special Tool(s): JLR-308-933

14.

CAUTIONS:

- Do not use excessive force whilst removing the flange assembly.
- Discard the snap ring.



Special Tool(s): JLR-308-933

15.



16.



INSTALLATION

CAUTION:

During the installation, make sure that all components are clean and free from foreign material.

1.

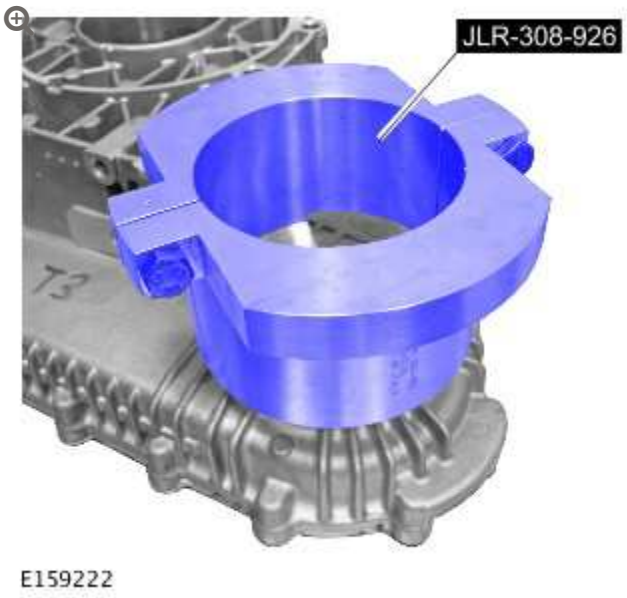

Position the special tool as shown, to support the transfer case during the next step.
Special Tool(s): JLR-308-926

2.

CAUTIONS:

- The chamfer on the bearing inner track must face the seal.
- The transfer case must be supported by the special tool on a flat surface during this step.



Install the bearing.

Special Tool(s): 308-620, JLR-308-926

3.



Install the seal.

Special Tool(s): 308-636

4.

CAUTIONS:

- Centralise the snap ring in the snap ring groove before installing the output flange.
- Extreme care is necessary to make sure the snap ring enters the bearing squarely.
- Install a new snap ring.



E159225

Using the special tool and with assistance, install the drive flange.
Special Tool(s): 205-818

5.

CAUTION:

Make sure that the oil pump is installed over its location peg.

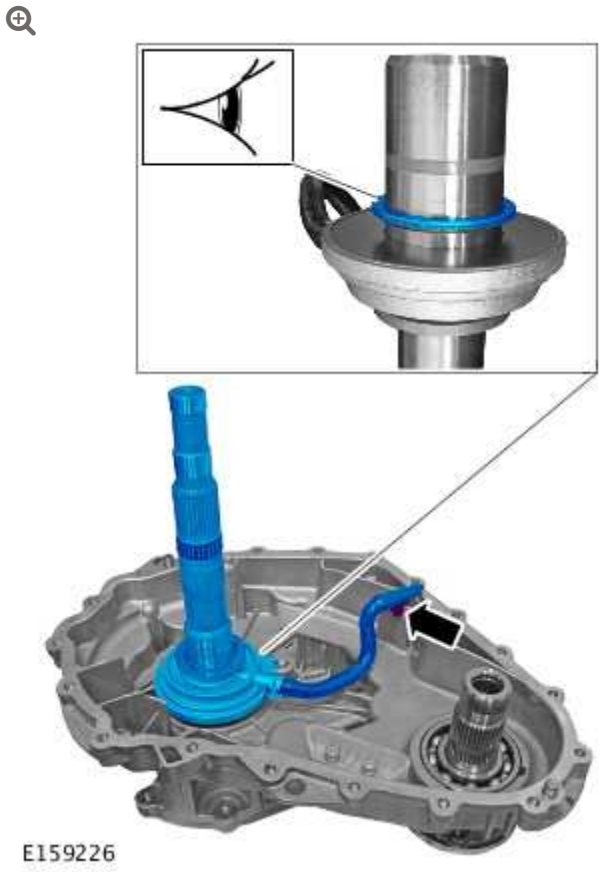

6. Clean the magnetic filter.

7. **CAUTION:**

Make sure that the clutch assembly is correctly located as illustrated.



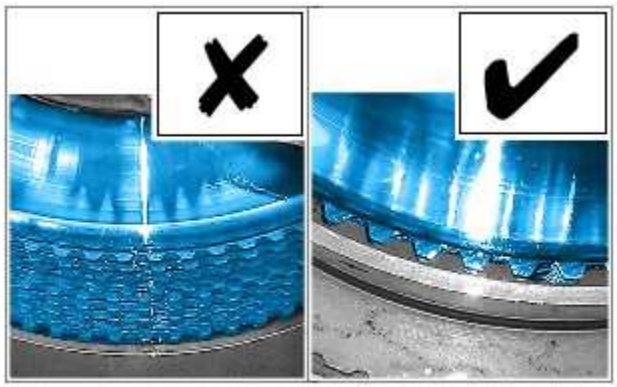

E149289

8.

CAUTION:

Make sure that the clutch assembly is correctly located as illustrated.



E149286

9.

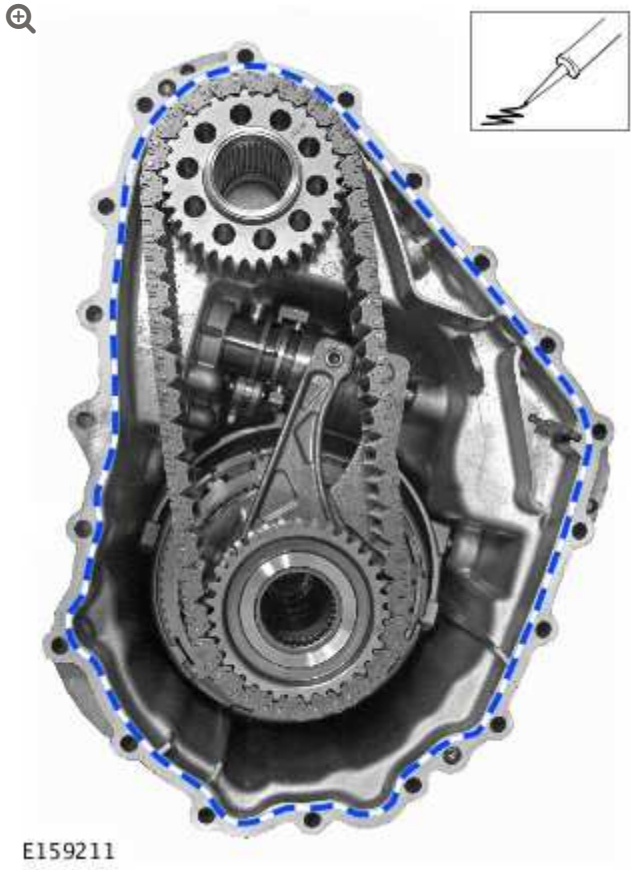

Apply a 2 mm bead of sealant to one surface of the transfer case mating face, as shown.

10.

CAUTIONS:

- Make sure that the input shaft spacer is correctly located.
- The input shaft and fluid pump assembly must be supported and held in place by hand, until it is located securely into the clutch assembly.

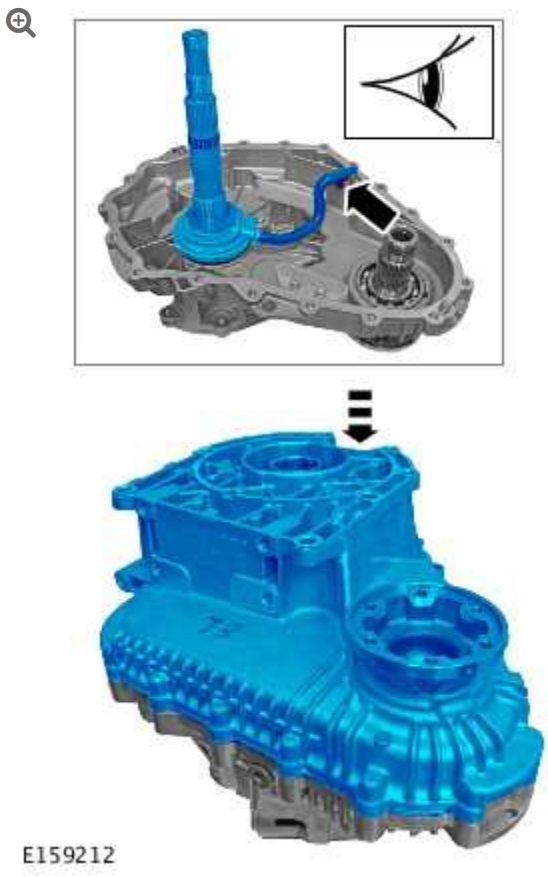

Install the front half of the transfer case.

11. **CAUTION:**

> Care must be taken when turning the transfer case over. The transfer case halves must not be allowed to separate.

With assistance, release the transfer case and secure with it's transmission mating face down on a flat surface.

12. **CAUTION:**

> Only tighten the bolts finger-tight at this stage.



E159191

13.



E159409

Torque: **10 Nm**

14.



E159191

Torque: **35 Nm**

15.



E159190

Torque: **35 Nm**

16.

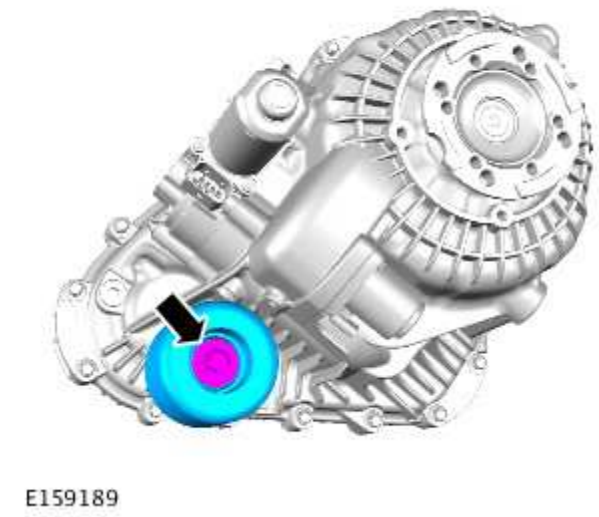

E159189

Torque: **75 Nm**

17. With assistance, release the transfer case from the flat surface.

18. Refer to: Transfer Case - V8 5.0L Petrol/V8 S/C 5.0L Petrol (308-07B Transfer Case, Installation).
Refer to: Transfer Case - TDV8 3.6L Diesel (308-07B, Installation).
Refer to: Transfer Case - TDV8 4.4L Diesel (308-07B, Installation).

19. Refer to: Transfer Case Draining and Filling (308-07B Transfer Case, General Procedures).

TRANSFER CASE FRONT OUTPUT SHAFT BEARING

(G1707006)

REMOVAL AND INSTALLATION

41.20.08	BEARING - FRONT OUTPUT SHAFT - RENEW	5000 CC, AJ V8	3.9	USED WITHINS	+

REMOVAL

1. The transfer case front output shaft bearing must be serviced with the seal as a pair.
   Refer to: Transfer Case Front Output Seal (308-07B Transfer Case, Removal and Installation).

INSTALLATION

1. To install, reverse the removal procedure.

TRANSFER CASE

TRANSFER CASE INPUT SHAFT SEAL – V8 5.0L PETROL/V8 S/C 5.0L PETROL (G1225939)

IN-VEHICLE REPAIR

41.20.50	OIL SEAL – INPUT SHAFT – RENEW	5000 CC, AJ V8	2.2	USED WITHINS	+

SPECIAL TOOL(S)



308-598

Oil seal installer

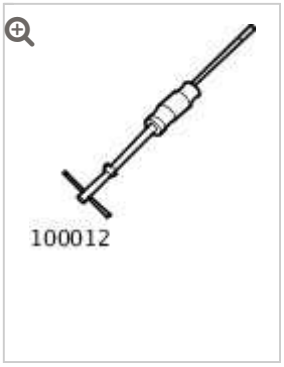

100-012

Slide hammer

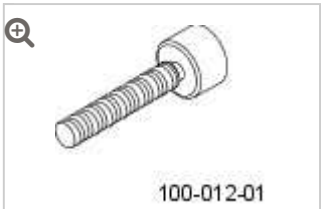

100-012-01

Slide hammer adaptor



308-375

Seal remover input and output

REMOVAL

NOTE:

Some variation in the illustrations may occur, but the essential information is always correct.

1. **WARNING:**

   Make sure to support the vehicle with axle stands.

   Raise and support the vehicle.

2. Remove the transfer case.
   For additional information, refer to: Transfer Case - 5.0L NA V8 - AJ133/5.0L SC V8 - AJ133 (308-07, Removal).

3. **CAUTION:**

   Care must be taken to avoid damage to the seal register and running surface.

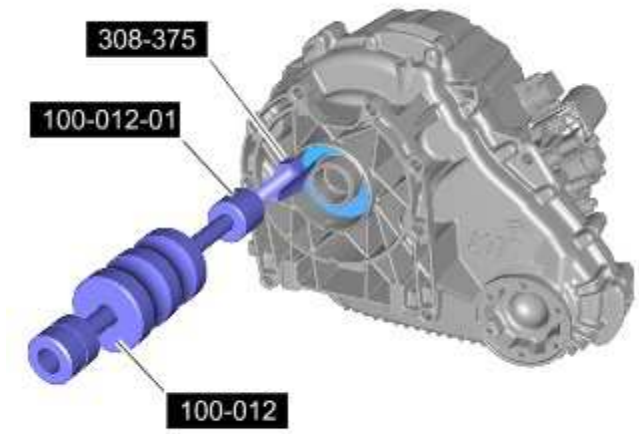

E131138

Carefully remove and discard the oil seal.

- Use the special tools.

INSTALLATION

1. **CAUTION:**

   Oil seals must be fitted dry.

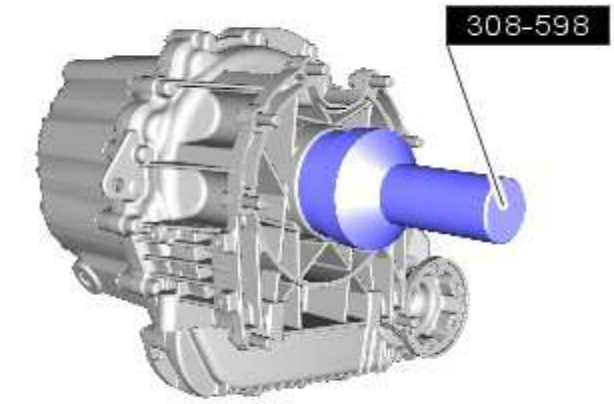

E50943

Install a new seal.

- Clean the seal register.
- Use the special tool.

2. Install the transfer case.
   For additional information, refer to: Transfer Case - 5.0L NA V8 - AJ133/5.0L SC V8 - AJ133 (308-07B, Installation).

TRANSFER CASE

TRANSFER CASE REAR OUTPUT SEAL (G1707007)

REMOVAL AND INSTALLATION

41.20.54	OIL SEAL (S) - REAR OUTPUT SHAFT - RENEW	5000 CC, AJ V8	4	USED WITHINS	+

SPECIAL TOOL(S)



204-525-1

Replacer, Drive Flange



205-726

Remover/Installer, Wheel Hub Bearing



308-637

Installer



JLR-308-927

Support Tool, Transfer Case



JLR-308-931

Remover, Transfer Case Flange

REMOVAL

NOTE:

Some variation in the illustrations may occur, but the essential information is always correct.

1. **WARNING:**

   Do not work on or under a vehicle supported only by a jack. Always support the vehicle on safety stands.

   Raise and support the vehicle.

2. Refer to: Transfer Case Draining and Filling (308-07B Transfer Case, General Procedures).

3. Refer to: Transfer Case - V8 5.0L Petrol/V8 S/C 5.0L Petrol (308-07B Transfer Case, Removal).
   Refer to: Transfer Case - TDV8 3.6L Diesel (308-07B, Removal).
   Refer to: Transfer Case - TDV8 4.4L Diesel (308-07B, Removal).

4. With assistance, secure the transfer case with it's transmission mating face down a flat surface.

5.

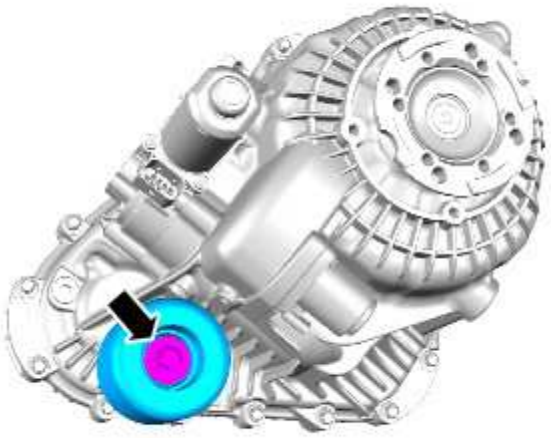

E159189

6.

WARNING:

Eye protection must be worn.

CAUTION:

Make sure the bolt holes are clean and free of swarf.



7.

WARNING:

Eye protection must be worn.

CAUTION:

Make sure the bolt holes are clean and free of swarf.



E159191

8.

CAUTION:

Care must be taken to avoid damage to the mating surfaces.



E159192

Using a soft faced mallet, release the rear casing.

9.



E159215

10.

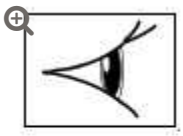



E159213

Locate the magnetic filter. The filter may have dropped into the front housing in the previous step.

11.

CAUTION:

Make sure that the mating faces are clean and free of foreign material.

Remove the sealant from the transfer case mating faces.

12.



Remove the spacer.

13.



14.

NOTE:

Remove as an assembly.



15.

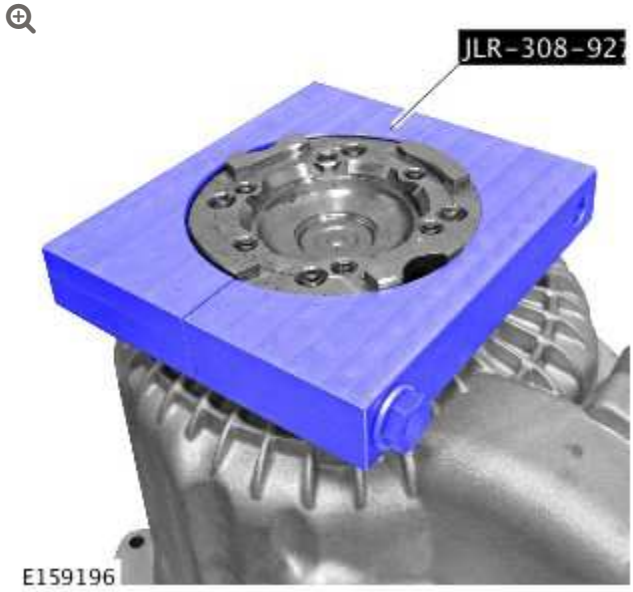

Special Tool(s): JLR-308-927

16.

CAUTION:

Make sure that the special tool is correctly located. This will make sure that the snap ring is fully compressed during the next step.

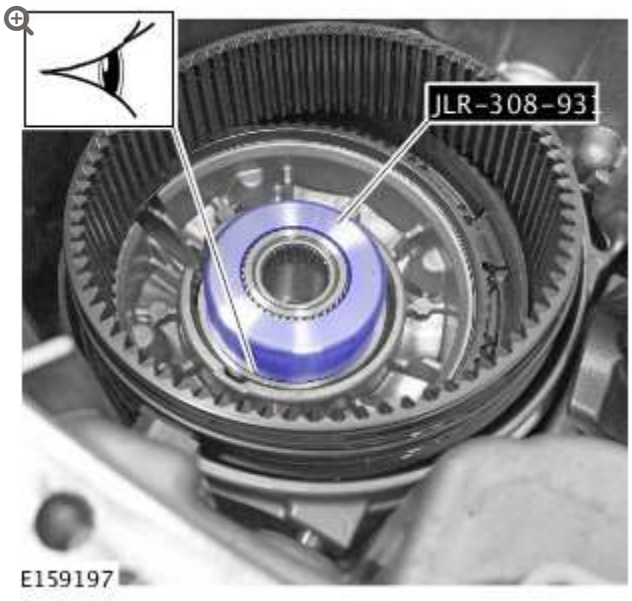

Special Tool(s): JLR-308-931

17.

CAUTIONS:

- Do not use excessive force whilst removing the flange assembly.
- Discard the snap ring.



Special Tool(s): JLR-308-931

18.



19.

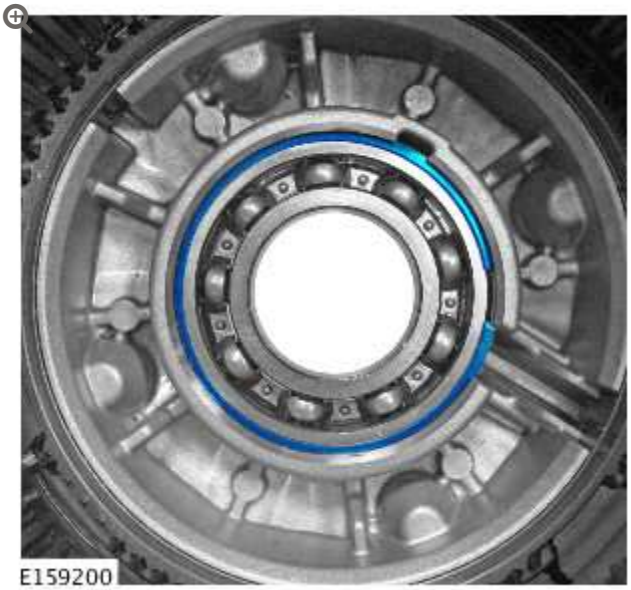

20.



21. With assistance, release the transfer case from the flat surface.

INSTALLATION

CAUTION:

During the installation, make sure that all components are clean and free from foreign material.

1.

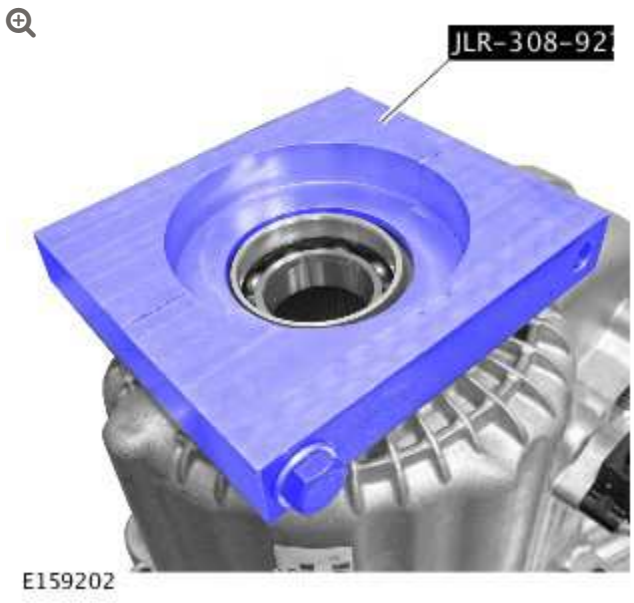

Position the special tool as shown, to support the transfer case during the next step.
Special Tool(s): JLR-308-927

2.

CAUTION:

The chamfer on the bearing inner track must face the seal.





E159203

Install the bearing.

Special Tool(s): 205-726

3.

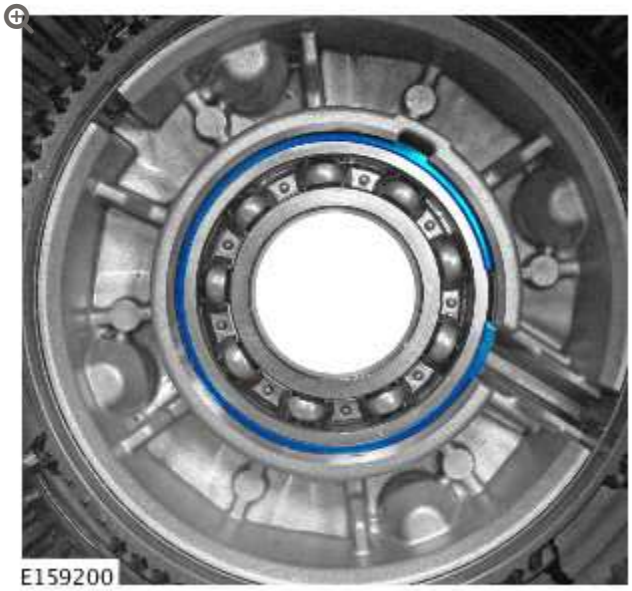

E159200

4.



Install the seal.

Special Tool(s): 308-637

5.

CAUTIONS:

- Centralise the snap ring in the snap ring groove before installing the output flange.
- Extreme care is necessary to make sure the snap ring enters the bearing squarely.
- Install a new snap ring.



Using the special tool and with assistance, install the drive flange.
Special Tool(s): 204-525-1

6. With assistance, secure the rear half of the transfer case with it's rear face down on a flat surface.

7. 

Install the spacer.

8.

NOTE:

Rotate the differential to engage the splines.



9.

NOTE:

Rotate the assembly to engage the clutch plates.

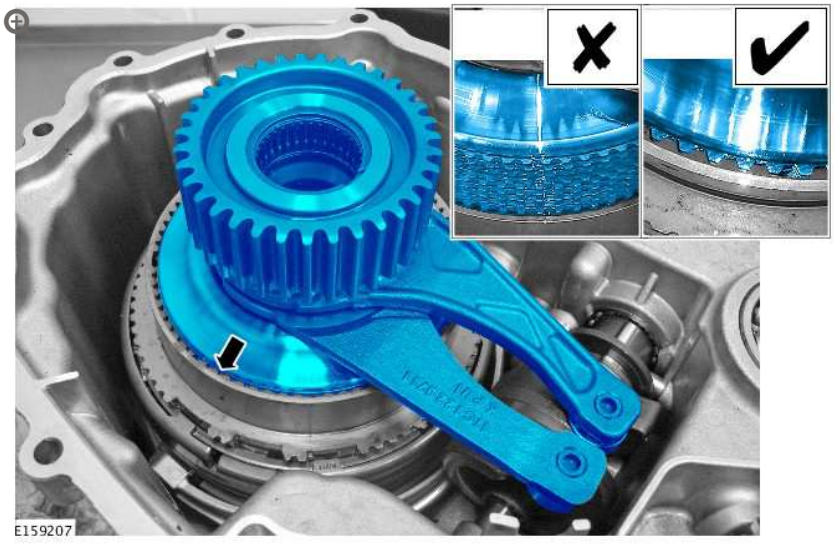

10.

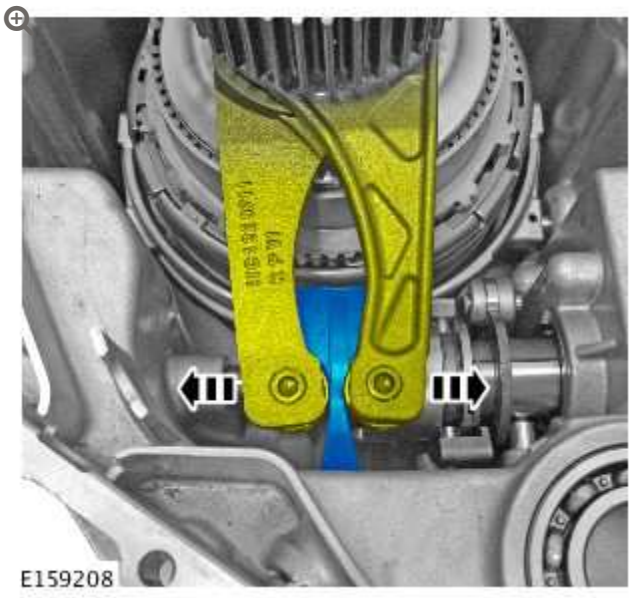

11.

CAUTION:

Make sure that the front driveshaft gear bearing is fully seated before installing the chain and gear.

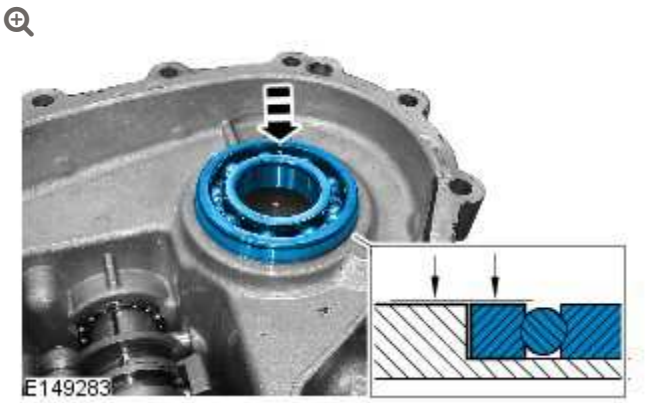

12.

CAUTION:

Make sure that the chain is installed with the dark links facing down.

NOTE:

The relieved splined inner diameter of the sprocket must face up as shown.

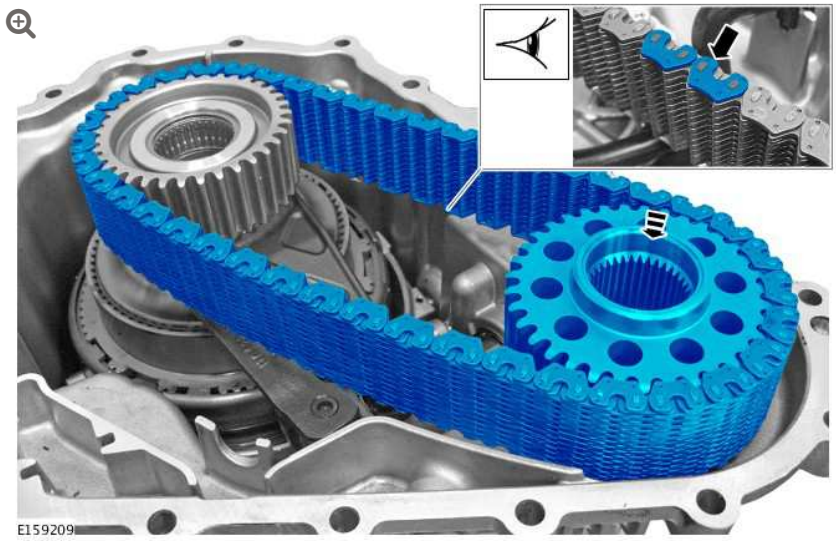

13.

CAUTION:

Make sure that the component is clean and free of foreign material .

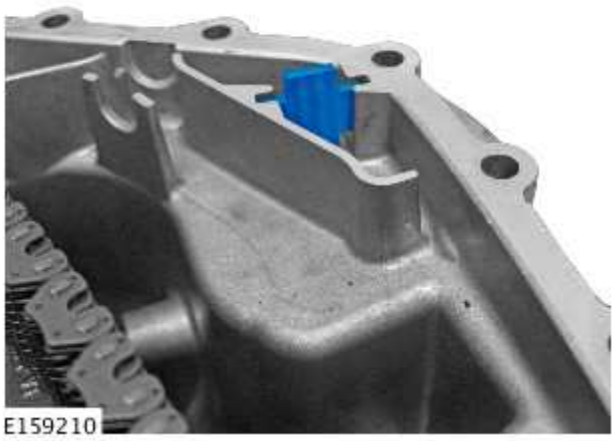

14.

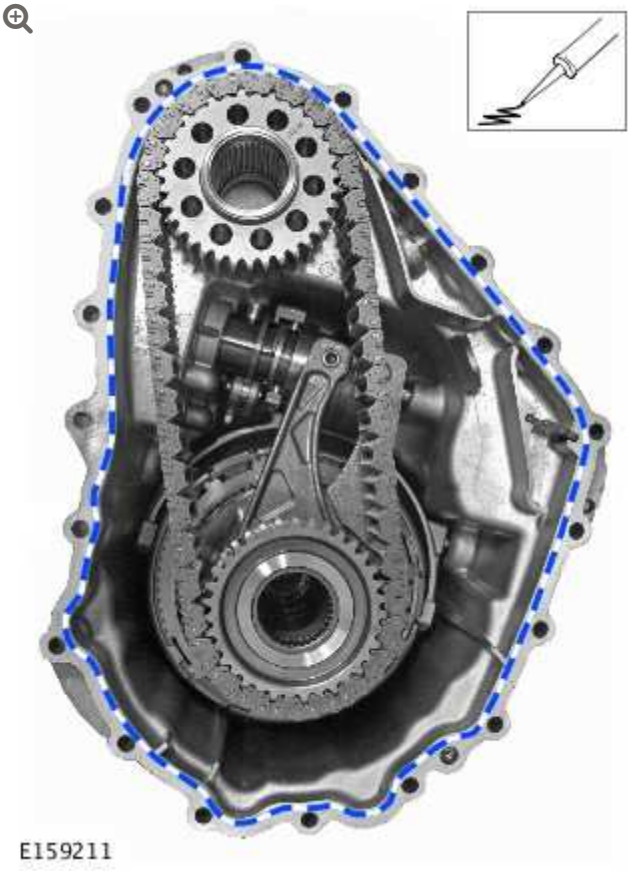

Apply a 2 mm bead of sealant to one surface of the transfer case mating face, as shown.

15.

CAUTIONS:

- Make sure that the input shaft spacer is located correctly.
- The input shaft and fluid pump assembly must be supported and held in place by hand, until it is located securely into the clutch assembly.

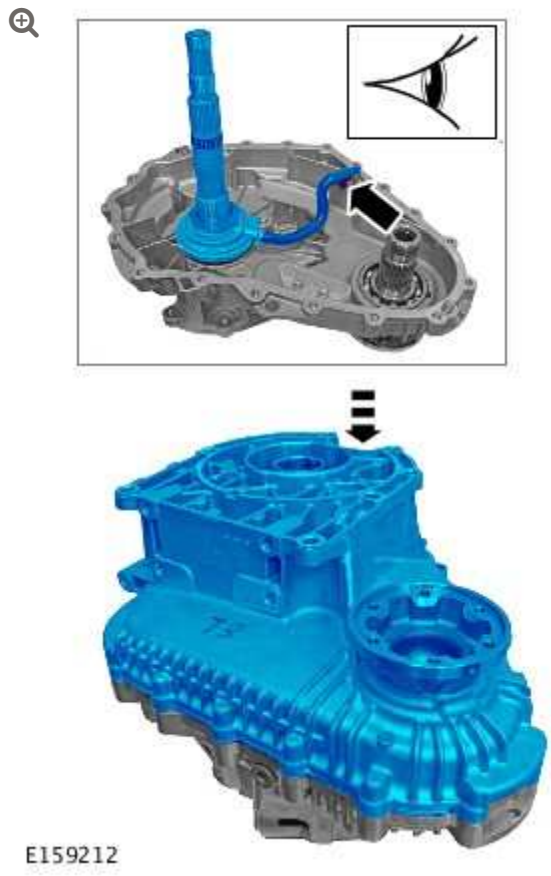

Install the front half of the transfer case.

16.

CAUTION:

Care must be taken when turning the transfer case over. The transfer case halves must not be allowed to separate.

With assistance, release the transfer case and secure with it's transmission mating face down on a flat surface.

17.

CAUTION:

Only tighten the bolts finger-tight at this stage.

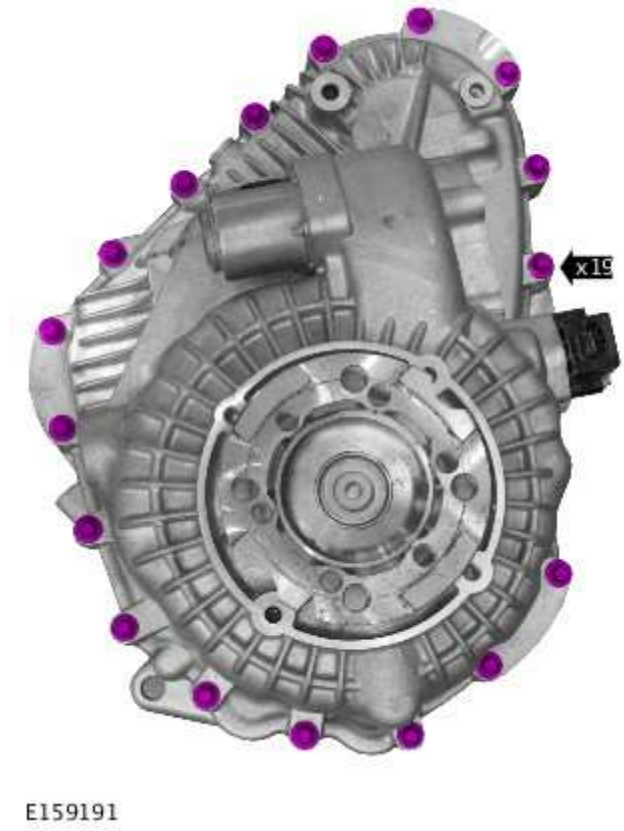

18.



E159409

Torque: **10 Nm**

19.



E159191

Torque: **35 Nm**

20.



E159190

Torque: **35 Nm**

21.

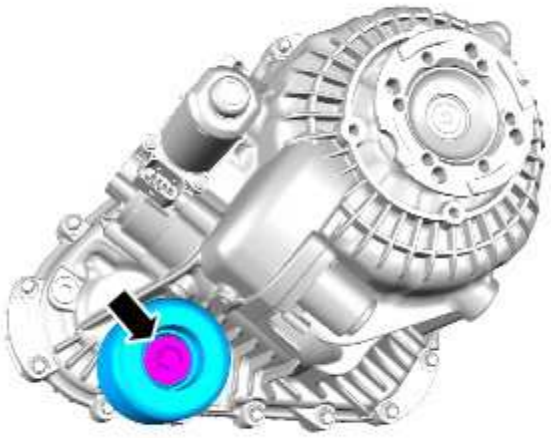

E159189

Torque: **75 Nm**

22. With assistance, release the transfer case from the flat surface.

23. Refer to: Transfer Case - V8 5.0L Petrol/V8 S/C 5.0L Petrol (308-07B Transfer Case, Installation).
Refer to: Transfer Case - TDV8 3.6L Diesel (308-07B, Installation).
Refer to: Transfer Case - TDV8 4.4L Diesel (308-07B, Installation).

24. Refer to: Transfer Case Draining and Filling (308-07B Transfer Case, General Procedures).

TRANSFER CASE

TRANSFER CASE REAR OUTPUT SHAFT BEARING

(G1707008)

REMOVAL AND INSTALLATION

41.20.19	BEARING - REAR OUTPUT SHAFT - RENEW	5000 CC, AJ V8	4	USED WITHINS	+

REMOVAL

1. The transfer case rear output shaft bearing must be serviced with the seal as a pair.
   Refer to: Transfer Case Rear Output Seal (308-07B Transfer Case, Removal and Installation).

INSTALLATION

1. To install, reverse the removal procedure.

TRANSFER CASE

DIAGNOSIS AND TESTING

PRINCIPLES OF OPERATION

For a detailed description of the Transfer Case, refer to the relevant Description and Operation section in the workshop manual. REFER to: Four-Wheel Drive Systems (308-07A Four-Wheel Drive Systems, Description and Operation).

INSPECTION AND VERIFICATION

CAUTION:

Diagnosis by substitution from a donor vehicle is **NOT** acceptable. Substitution of control modules does not guarantee confirmation of a fault, and may also cause additional faults in the vehicle being tested and/or the donor vehicle.

NOTES:

- If the control module or a component is suspect and the vehicle remains under manufacturer warranty, refer to the Warranty Policy and Procedures manual (section B1.2), or determine if any prior approval programme is in operation, prior to the installation of a new module/component.
- When performing voltage or resistance tests, always use a digital multimeter accurate to three decimal places, and with an up-to-date calibration certificate. When testing resistance always take the resistance of the digital multimeter leads into account.
- Check and rectify basic faults before beginning diagnostic routines involving pinpoint tests.

1. Verify the customer concern

2. Visually inspect for obvious signs of damage and system integrity.

Visual Inspection

MECHANICAL	ELECTRICAL

▪ Transfer case
▪ Driveshafts
▪ Differentials
▪ Halfshafts
▪ Fluid leaks
▪ Wheels and tires
  ▪ Sizes
  ▪ Pressures
  ▪ Condition
  ▪ Wear (tread depth, even/uneven wear)
	▪ Fuses
	▪ Wiring harnesses and connectors
	▪ Transfer case control module
	▪ High/low range switch

3. If an obvious cause for an observed or reported concern is found, correct the cause (if possible) before proceeding to the next step

4. If the cause is not visually evident, verify the symptom and refer to the Symptom Chart, alternatively check for Diagnostic Trouble Codes (DTCs) and refer to the DTC Index

5. Check DDW for open campaigns. Refer to the corresponding bulletins and SSMs which may be valid for the specific customer complaint and carry out the recommendations as required

SYMPTOM CHART

SYMPTOM	POSSIBLE CAUSES	ACTION
Warning message/gearbox fault displayed on instrument cluster	▪ Transfer case system fault	▪ Using the manufacturer approved diagnostic system, perform routine - Inline diagnostic unit 2 non-intrusive test - Transfer case ▪ Pass - Recheck operation ▪ Fail - Refer to the relevant DTC index
No drive to the front and rear wheels	▪ Front/rear driveshaft failure/disconnected ▪ Front/center/rear differential failure ▪ Front/rear left/right halfshaft failure/disconnected ▪ Transfer case system failure	▪ Check the integrity of the front and rear driveshafts ▪ Check the integrity of the front, center and rear differentials ▪ Check the integrity of the halfshafts ▪ Using the manufacturer approved diagnostic system, check the transfer case control module for

SYMPTOM	POSSIBLE CAUSES	ACTION
	▪ Transfer case in Neutral ▪ Transfer case calibration failure	related DTCs and refer to the relevant DTC index ▪ GO to Pinpoint Test **B.** ▪ Using the manufacturer approved diagnostic system, perform routine - Transfer Case Replacement
No drive to the front axle	▪ Transfer case clutch worn/burnt	▪ Check the integrity of the driveshafts, differentials and halfshafts. Rectify as necessary. Check the vehicle history for driveline failures. If a driveline failure has occurred, drain and refill the transfer case fluid, and perform routine - Transfer Case Replacement. Clear the DTCs and re-test. If the fault persists, GO to Pinpoint Test **C.**
No drive to the front and rear wheels - Automatic transmission gear selection operating correctly	▪ Transfer case calibration failure ▪ Transfer case solenoid circuit short circuit to ground, short circuit to power, open circuit, high resistance ▪ Transfer case actuator position sensor signal A circuit short circuit to ground, short circuit to power, open circuit, high resistance ▪ Transfer case actuator position sensor signal B circuit short circuit to ground, short circuit to power, open circuit, high resistance ▪ Transfer case actuator circuit short circuit to	▪ Using the manufacturer approved diagnostic system, check the transfer case control module for related DTCs and refer to the relevant DTC index. Check if the range change actuator is audible during operation. GO to Pinpoint Test **B.** . Clear the DTCs and retest ▪ GO to Pinpoint Test **E.** ▪ GO to Pinpoint Test **G.** ▪ GO to Pinpoint Test **H.** ▪ GO to Pinpoint Test **D.** ▪ Using the manufacturer approved diagnostic system, check the transfer case control module for related DTCs and refer to

SYMPTOM	POSSIBLE CAUSES	ACTION
	ground, short circuit to power, open circuit, high resistance ▪ Transfer case range change mechanism obstructed ▪ Transfer case range change mechanism not calibrated correctly ▪ Transfer case control module power or ground circuit open circuit, high resistance ▪ Battery/charging system fault	the relevant DTC index. Check if the range change actuator is audible during operation. GO to Pinpoint Test **B.** ▪ Using the manufacturer approved diagnostic system, perform routine - Transfer Case Replacement. Check the transfer case control module for related DTCs and refer to the relevant DTC index. GO to Pinpoint Test **B.** ▪ Refer to the electrical circuit diagrams and check the transfer case control module power and ground circuits for open circuit, high resistance. Repair the wiring harness as necessary ▪ Refer to the relevant section of the workshop manual and check the battery and charging system
Range change inoperative	▪ Transfer case system fault ▪ Transfer case requires calibration (after installing a new component) ▪ Transfer case too cold ▪ Transfer case control module internal temperature above threshold ▪ Transfer case range change mechanism obstructed ▪ Automatic transmission drag	

SYMPTOM	POSSIBLE CAUSES	ACTION
	torque excessively high ▪ Transfer case control module power or ground circuit open circuit, high resistance ▪ Battery/charging system fault	**NOTES:** ▪ Transfer case range changes are inhibited when the transfer case actuator temperature is above 100°C or below -30°C. Only one transfer case range change per minute is permitted when the transfer case actuator temperature is between -30°C and 0°C. ▪ Transfer case range changes are inhibited when the transfer case control module internal temperature is above 100°C. ▪ Using the manufacturer approved diagnostic system, perform routine - Inline diagnostic unit 2 non-intrusive test - Transfer case ▪ Using the manufacturer approved diagnostic system, check the transfer case control module for related DTCs and refer to the relevant DTC index ▪ Using the manufacturer approved diagnostic system, perform routine - Transfer Case Replacement

SYMPTOM	POSSIBLE CAUSES	ACTION
		▪ Drive the vehicle to warm the transfer case and retest. Using the manufacturer approved diagnostic system, check datalogger signal - Motor Temperature (0xD11C) ▪ Using the manufacturer approved diagnostic system, check datalogger signals - ECU Internal Temperature (0xD117) - and - Motor Temperature (0xD11C) - and - Motor Over Temperature Events (0xD11F) ▪ Using the manufacturer approved diagnostic system, perform routine - Transfer Case Replacement. If the routine fails, check if the range change actuator is audible during operation. GO to Pinpoint Test **B.** ▪ GO to Pinpoint Test **I.** ▪ Refer to the electrical circuit diagrams and check the transfer case control module power and ground circuits for open circuit, high resistance. Repair the wiring harness as necessary ▪ Refer to the relevant section of the workshop manual and check the battery and charging system
Off road traction reduced and warning message: TRANSMISSION OVERHEAT SLOW DOWN	▪ Center differential temperature is approaching the overheat threshold ▪ Transfer case fluid level low	

SYMPTOM	POSSIBLE CAUSES	ACTION
		NOTE: This warning message may be induced by prolonged off road driving. ▪ Using the manufacturer approved diagnostic system, check the transfer case control module for related DTCs and refer to the relevant DTC index. Check datalogger signals - ECU Internal Temperature (0xD117) - and - Motor Temperature (0xD11C) - and - Motor Over Temperature Events (0xD11F) ▪ Check the transfer case for fluid leaks. Refer to the relevant section of the workshop manual and check the transfer case fluid level
Off road traction reduced and warning message: TRANSMISSION FAULT – TRACTION REDUCED	▪ Center differential clutch has failed - Operating as an open differential ▪ Transfer case control module has stopped transmitting on the CAN bus and defaults to open center differential	▪ Using the manufacturer approved diagnostic system, check the transfer case control module for related DTCs and refer to the relevant DTC index ▪ Using the manufacturer approved diagnostic system, perform a CAN network integrity test. Refer to the electrical circuit diagrams and check the high speed CAN bus circuit for short circuit to ground, short circuit to power, open circuit, high resistance. Repair the wiring harness as necessary

SYMPTOM	POSSIBLE CAUSES	ACTION
Judder during low speed manoeuvring with high steering inputs	▪ Excessive difference in tire circumference due to incorrect size, incorrect pressure or wear ▪ Transfer case fluid degraded ▪ Transfer case control module is not configured correctly ▪ Transfer case requires calibration (after installing a new component) ▪ Transfer case clutch not disengaged fully due to water contamination of the transfer case fluid ▪ Front/rear left/right halfshaft failure/disconnected ▪ Rear differential clutch not disengaged fully due to water contamination of the rear differential fluid (active differential)	▪ Check the tire sizes, pressures and condition ▪ Refer to the relevant section of the workshop manual and drain the transfer case fluid. Flush the transfer case with new fluid and re-fill ▪ Using the manufacturer approved diagnostic system, re-configure the transfer case control module with the latest level software ▪ GO to Pinpoint Test **C.** ▪ GO to Pinpoint Test **A.** ▪ Check the integrity of the halfshafts ▪ Refer to the relevant section of the workshop manual and check the rear differential fluid level/condition
Excessively loud clunk during transfer case range change	▪ Transfer case requires calibration (after installing a new component) ▪ Transfer case control module is not configured correctly	**NOTE:** During a transfer case range change, a mechanical noise may be audible. This is normal and does not indicate a fault. ▪ Using the manufacturer approved diagnostic system, perform routine - Transfer Case

SYMPTOM	POSSIBLE CAUSES	ACTION
		Replacement. Check the transfer case control module for related DTCs and refer to the relevant DTC index. If the fault persists, GO to Pinpoint Test C. ▪ Using the manufacturer approved diagnostic system, re-configure the transfer case control module with the latest level software
Excessively loud clunk when ignition is set to off (transfer case cycles to rest position)	▪ Transfer case requires calibration (after installing a new component) ▪ Transfer case control module is not configured correctly ▪ Transfer case clutch worn/burnt	**NOTE:** During a transfer case range change, a mechanical noise may be audible. This is normal and does not indicate a fault. ▪ Using the manufacturer approved diagnostic system, perform routine - Transfer Case Replacement. Check the transfer case control module for related DTCs and refer to the relevant DTC index ▪ Using the manufacturer approved diagnostic system, re-configure the transfer case control module with the latest level software ▪ GO to Pinpoint Test C.
Whining noise	▪ Transfer case bearing/chain wear	▪ sing the manufacturer approved diagnostic system, perform routine - Inline diagnostic unit 2

SYMPTOM	POSSIBLE CAUSES	ACTION
		noise, vibration and harshness diagnostic test - Transfer case ▪ Refer to the relevant section of the workshop manual and install a new transfer case chain ▪ Refer to the relevant section of the workshop manual and install a new transfer case rear output shaft bearing
Transfer case fluid burnt (darker color than normal)	▪ Excessive off-road driving ▪ Transfer case clutch worn/burnt ▪ Electric rear differential fault	**NOTE:** Some small particles may be present in the transfer case fluid. This is normal and does not indicate a fault. ▪ Refer to the relevant section of the workshop manual and drain and refill the transfer case fluid. Using the manufacturer approved diagnostic system, perform routine - Transfer Case Replacement. Check the transfer case control module for related DTCs and refer to the relevant DTC index ▪ Check the integrity of the driveshafts, differentials and halfshafts. Rectify as necessary. Check the vehicle history for driveline failures. If a driveline failure has occurred, drain and refill the transfer case fluid, and perform routine -

SYMPTOM	POSSIBLE CAUSES	ACTION
		Transfer Case Replacement. Clear the DTCs and re-test. If the fault persists, GO to Pinpoint Test **C.** ▪ Using the manufacturer approved diagnostic system, check the rear differential control module for related DTCs and refer to the relevant DTC index
Fluid leak	▪ Transfer case breather pipe blocked ▪ Input shaft seal failure ▪ Front output shaft seal failure ▪ Rear output shaft seal failure ▪ Actuator seal failure ▪ Solenoid seal failure ▪ Mating face seal failure	▪ Check the transfer case breather pipe for blockages ▪ Install a new input shaft seal ▪ Install a new front output shaft seal ▪ Install a new rear output shaft seal ▪ Install a new actuator seal ▪ Install a new solenoid seal ▪ Re-seal the transfer case mating faces
Transfer Case Replacement routine fails repeatedly	▪ Transfer case clutch worn/burnt ▪ Automatic transmission drag torque excessively high ▪ Transfer case control module power or ground circuit open circuit, high resistance ▪ Battery/charging system fault	▪ Check the integrity of the driveshafts, differentials and halfshafts. Rectify as necessary. Check the vehicle history for driveline failures. If a driveline failure has occurred, GO to Pinpoint Test **C.** ▪ GO to Pinpoint Test **I.** ▪ Refer to the electrical circuit diagrams and check the transfer case control module power and ground circuits for open circuit, high resistance. Repair the wiring harness as necessary

SYMPTOM	POSSIBLE CAUSES	ACTION
		▪ Refer to the relevant section of the workshop manual and check the battery and charging system
Actuator temperature sensor DTC set	▪ Actuator temperature sensor circuit short circuit to ground, short circuit to power, open circuit, high resistance	▪ GO to Pinpoint Test **F.**

TRANSFER CASE SERIAL NUMBER LOCATION

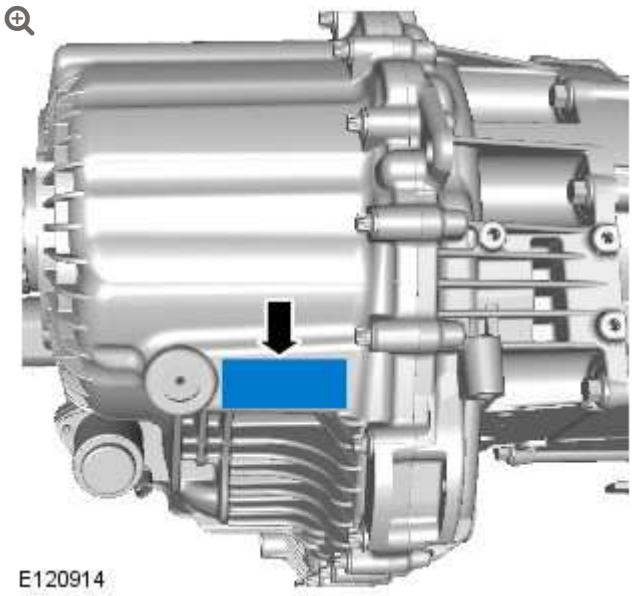

There are two numbers stamped onto the transfer case. The first is the part number and the second is the serial number.

TRANSFER CASE ROUTINES

When new transfer case components are installed, the relevant routine must be performed using the manufacturer approved diagnostic system:

- Transfer case control module - Transfer Case Replacement routine
- Transfer case actuator - Transfer Case Replacement routine
- Transfer case - Transfer Case Replacement routine
- Transfer case mode selector solenoid - Solenoid Replacement routine
- Transfer case mode selector position sensor - Absolute Position Sensor Replacement routine

DRIVE CYCLE

To validate a transfer case repair, the following drive cycle must be completed:

1. Drive the vehicle a short distance and halt and drive away at least twice
2. Select low range and then select high range (vehicle not moving)
3. Halt the vehicle and select Neutral (manual transmission) or Park (automatic transmission)
4. Set the ignition to off
5. Wait until the transmission control switch Park LED has extinguished (automatic transmission)
6. Start the engine
7. Drive the vehicle until the engine, transmission and transfer case are at normal operating temperature

8. Repeat steps 1 to 5

TRANSFER CASE REPLACEMENT ROUTINE

WARNING:

Stand clear of the vehicle when performing the Transfer Case Replacement routine, as the vehicle may move forward/rearward suddenly. Failure to follow this instruction may result in injury.

NOTE:

When performing the Transfer Case Replacement routine, the transmission should be set to Neutral and the parking brake set to off. Chock the wheels to prevent the vehicle moving excessively (do not apply the brakes as the vehicle must be allowed to move forward/rearward slightly). Failure to follow this instruction will cause the routine to fail.

The Transfer Case Replacement routine should be performed after installing a new transfer case or to calibrate the transfer case mechanism.

TRANSFER CASE CLUTCH CALIBRATION ANGLE RESULTS TABLE

NOTE:

Transfer case clutch calibration angles are displayed as negative values. When assessing the results, the size of the angle should be considered (not the absolute value). For example, -20° is greater than -10° (because the angle is greater).

RESULTS	MEANING	ACTION
Result 1 and Result 2 angles between -20° and -60° and within 10° of each other	Minimal clutch wear (as new)	No action necessary
Result 1 angle or Result 2 angle greater than -170°	Maximum clutch wear	Install a new transfer case
Result 1 angle less than Result 2 angle by 10° or more	Clutch discs burnt	Install a new transfer case and check for driveline failures
Result 1 angle greater than Result 2 angle by 10° or more	Clutch discs damaged due to water ingress	Install a new transfer case

PINPOINT TESTS

NOTE:

Some small particles may be present in the transfer case fluid. This is normal and does not indicate a fault.

PINPOINT TEST A : FLUID CONDITION TESTS	
TEST CONDITIONS	DETAILS/RESULTS/ACTIONS
A1: FLUID CONDITION - PARTICLES	
	1 Drain a sample of fluid from the transfer case.

PINPOINT TEST A : FLUID CONDITION TESTS	
	2 Check the fluid for solid particles.
	Are any large solid particles present in the transfer case fluid? **Yes** Install a new transfer case. **No** GO to Pinpoint Test **C.**

NOTE:

Perform this test with the engine running and the vehicle stationary.

PINPOINT TEST B : ACTUATOR POSITION TESTS	
TEST CONDITIONS	DETAILS/RESULTS/ACTIONS
B1: ACTUATOR POSITION DATALOGGER SIGNAL	
	1 Using the manufacturer approved diagnostic system, check datalogger signal - Actuator Position (0xD123).
	2 Operate the range change switch to engage high range and low range three times each, and check the Actuator Position value for each event: ▪ High range: >= 9 mm ▪ Neutral: = 0 mm ▪ Low range: <= -9 mm
	Does the Actuator Position value match the expected value? **Yes** No fault found. **No** Perform routine - Transfer Case Replacement. Clear the DTCs and re-test. If the fault persists, install a new transfer case.

NOTES:

- The clutch calibration angle value can be used to assess the wear state of the transfer case clutch discs.
- The difference between successive clutch calibration angle values can be used to assess the condition of the transfer case clutch discs.
- Transfer case clutch calibration angles are displayed as negative values. When assessing the results, the size of the angle should be considered (not the absolute value). For example, -20° is greater than -10° (because the angle is greater).

PINPOINT TEST C : CLUTCH CALIBRATION ANGLE TESTS	
TEST CONDITIONS	DETAILS/RESULTS/ACTIONS
C1: CLUTCH CALIBRATION ANGLE - FIRST READ	
	1 Start the engine.
	2 Using the manufacturer approved diagnostic system, check datalogger signal - Internal Variable Clutch Calibration Angle (0xD902). Record the value (this is Result 1).
	Is Result 1 greater than -170°? **Yes** Install a new transfer case. **No** GO to C2.
C2: CLUTCH CALIBRATION ANGLE - SECOND READ	
	NOTE: If the routine fails because the clutch cannot be calibrated, contact Dealer Technical Support. **1**

PINPOINT TEST C : CLUTCH CALIBRATION ANGLE TESTS	
	Using the manufacturer approved diagnostic system, perform routine - Transfer Case Replacement.
	2 Check datalogger signal - Internal Variable Clutch Calibration Angle (0xD902). Record the value (this is Result 2).
	Do Result 1 and Result 2 differ by greater than 10°? **Yes** Install a new transfer case. **No** No fault found.

NOTE:

The nominal resistance of the transfer case actuator is 1.0 Ω.

PINPOINT TEST D : TRANSFER CASE ACTUATOR CIRCUIT TESTS	
TEST CONDITIONS	DETAILS/RESULTS/ACTIONS
D1: TRANSFER CASE WIRING HARNESS AND ACTUATOR LOW RESISTANCE	
	1 Set the ignition to off.
	2 Disconnect the largest wiring harness connector from the transfer case control module.
	3 Connect an ohm-meter to terminal 15 and terminal 18 of the transfer case control module wiring harness connector.
	4 Measure the resistance.
	Is the measured resistance less than 0.5 Ω? **Yes** Resistance too low. GO to D2. **No** Resistance not too low. GO to D3.
D2: TRANSFER CASE ACTUATOR LOW RESISTANCE	
	1 Disconnect the wiring harness connector from the transfer case actuator.

PINPOINT TEST D : TRANSFER CASE ACTUATOR CIRCUIT TESTS	
	2 Connect an ohm-meter to terminal 1 and terminal 8 of the transfer case actuator.
	3 Measure the resistance.
	Is the measured resistance less than 0.5 Ω? **Yes** Resistance too low. Install a new transfer case actuator. **No** Resistance not too low. Check the transfer case actuator wiring harness for short circuit between the wires. Repair the wiring harness as necessary.
D3: TRANSFER CASE WIRING HARNESS AND ACTUATOR HIGH RESISTANCE	
	1 Connect an ohm-meter to terminal 15 and terminal 18 of the transfer case control module wiring harness connector.
	2 Measure the resistance.
	Is the measured resistance greater than 15.0 Ω? **Yes** Resistance too high. **GO to D4**. **No** Resistance not too high. **GO to D5**.
D4: TRANSFER CASE ACTUATOR HIGH RESISTANCE	
	1 Disconnect the wiring harness connector from the transfer case actuator.
	2 Connect an ohm-meter to terminal 1 and terminal 8 of the transfer case actuator.
	3 Measure the resistance.
	Is the measured resistance greater than 15.0 Ω? **Yes** Resistance too high. Install a new transfer case actuator. **No** Resistance not too high. Check the transfer case actuator wiring harness for open circuit, high resistance. Repair the wiring harness as necessary.
D5: TRANSFER CASE WIRING HARNESS AND ACTUATOR SHORT CIRCUIT TO GROUND	
	1 Connect an ohm-meter to terminal 15 of the transfer case control module wiring harness connector and ground.

PINPOINT TEST D : TRANSFER CASE ACTUATOR CIRCUIT TESTS	
	2 Measure the resistance.
	Is the measured resistance infinitely high (open circuit)? **Yes** No short circuit to ground. No fault found. **No** Short circuit to ground. GO to D6.
D6: TRANSFER CASE ACTUATOR SHORT CIRCUIT TO GROUND	
	1 Disconnect the wiring harness connector from the transfer case actuator.
	2 Connect an ohm-meter to terminal 15 of the transfer case control module wiring harness connector and ground.
	3 Measure the resistance.
	Is the measured resistance infinitely high (open circuit)? **Yes** Short circuit to ground. Install a new transfer case actuator. **No** No short circuit to ground. Check the transfer case actuator wiring harness for short circuit to ground. Repair the wiring harness as necessary.

PINPOINT TEST E : TRANSFER CASE SOLENOID CIRCUIT TESTS	
TEST CONDITIONS	**DETAILS/RESULTS/ACTIONS**
E1: TRANSFER CASE WIRING HARNESS AND SOLENOID LOW RESISTANCE	
	1 Set the ignition to off.
	2 Disconnect the largest wiring harness connector from the transfer case control module.
	3 Connect an ohm-meter to terminal 12 and terminal 9 of the transfer case control module wiring harness connector.
	4 Measure the resistance.
	Is the measured resistance less than 0.2 Ω? **Yes** Resistance too low. GO to E2. **No** Resistance not too low. GO to E3.

PINPOINT TEST E : TRANSFER CASE SOLENOID CIRCUIT TESTS	
E2: TRANSFER CASE SOLENOID LOW RESISTANCE	
	1 Disconnect the wiring harness connector from the transfer case solenoid.
	2 Connect an ohm-meter to terminal 1 and terminal 2 of the transfer case solenoid.
	3 Measure the resistance.
	Is the measured resistance less than 0.2 Ω? **Yes** Resistance too low. Install a new transfer case solenoid. **No** Resistance not too low. Check the transfer case solenoid wiring harness for short circuit between the wires. Repair the wiring harness as necessary.
E3: TRANSFER CASE WIRING HARNESS AND SOLENOID HIGH RESISTANCE	
	1 Connect an ohm-meter to terminal 12 and terminal 9 of the transfer case control module wiring harness connector.
	2 Measure the resistance.
	Is the measured resistance greater than 10 Ω? **Yes** Resistance too high. **GO to E4**. **No** Resistance not too high. **GO to E5**.
E4: TRANSFER CASE SOLENOID HIGH RESISTANCE	
	1 Disconnect the wiring harness connector from the transfer case solenoid.
	2 Connect an ohm-meter to terminal 1 and terminal 2 of the transfer case solenoid.
	3 Measure the resistance.
	Is the measured resistance greater than 10 Ω? **Yes** Resistance too high. Install a new transfer case solenoid. **No** Resistance not too high. Check the transfer case solenoid wiring harness for open circuit, high resistance. Repair the wiring harness as necessary.

PINPOINT TEST E : TRANSFER CASE SOLENOID CIRCUIT TESTS	
E5: TRANSFER CASE WIRING HARNESS AND SOLENOID SHORT CIRCUIT TO GROUND	
	1 Connect an ohm-meter to terminal 12 of the transfer case control module wiring harness connector and ground.
	2 Measure the resistance.
	Is the measured resistance infinitely high (open circuit)? **Yes** No short circuit to ground. No fault found. **No** Short circuit to ground. GO to E6.
E6: TRANSFER CASE SOLENOID SHORT CIRCUIT TO GROUND	
	1 Disconnect the wiring harness connector from the transfer case solenoid.
	2 Connect an ohm-meter to terminal 12 of the transfer case control module wiring harness connector and ground.
	3 Measure the resistance.
	Is the measured resistance infinitely high (open circuit)? **Yes** Short circuit to ground. Install a new transfer case solenoid. **No** No short circuit to ground. Check the transfer case solenoid wiring harness for short circuit to ground. Repair the wiring harness as necessary.

PINPOINT TEST F : TRANSFER CASE ACTUATOR TEMPERATURE SENSOR CIRCUIT TESTS	
TEST CONDITIONS	DETAILS/RESULTS/ACTIONS
F1: TRANSFER CASE WIRING HARNESS AND ACTUATOR TEMPERATURE SENSOR LOW RESISTANCE	
	1 Set the ignition to off.
	2 Disconnect the largest wiring harness connector from the transfer case control module.
	3 Connect an ohm-meter to terminal 5 and terminal 2 of the transfer case control module wiring harness connector.
	4 Measure the resistance.

PINPOINT TEST F : TRANSFER CASE ACTUATOR TEMPERATURE SENSOR CIRCUIT TESTS	
	Is the measured resistance less than 1 kΩ? **Yes** Resistance too low. **GO to F2**. **No** Resistance not too low. **GO to F3**.
F2: TRANSFER CASE ACTUATOR TEMPERATURE SENSOR LOW RESISTANCE	
	1 Disconnect the wiring harness connector from the transfer case actuator.
	2 Connect an ohm-meter to terminal 4 and terminal 7 of the transfer case actuator.
	3 Measure the resistance.
	Is the measured resistance less than 1 kΩ? **Yes** Resistance too low. Install a new transfer case actuator. **No** Resistance not too low. Check the transfer case actuator wiring harness for short circuit between the wires. Repair the wiring harness as necessary.
F3: TRANSFER CASE WIRING HARNESS AND ACTUATOR TEMPERATURE SENSOR HIGH RESISTANCE	
	1 Connect an ohm-meter to terminal 5 and terminal 2 of the transfer case control module wiring harness connector.
	2 Measure the resistance.
	Is the measured resistance greater than 30 kΩ? **Yes** Resistance too high. **GO to F4**. **No** Resistance not too high. **GO to F5**.
F4: TRANSFER CASE ACTUATOR TEMPERATURE SENSOR HIGH RESISTANCE	
	1 Disconnect the wiring harness connector from the transfer case actuator.
	2 Connect an ohm-meter to terminal 4 and terminal 7 of the transfer case actuator.
	3 Measure the resistance.

PINPOINT TEST F : TRANSFER CASE ACTUATOR TEMPERATURE SENSOR CIRCUIT TESTS	
	Is the measured resistance greater than 30 kΩ? **Yes** Resistance too high. Install a new transfer case actuator. **No** Resistance not too high. Check the transfer case actuator wiring harness for open circuit, high resistance. Repair the wiring harness as necessary.
F5: TRANSFER CASE WIRING HARNESS AND ACTUATOR TEMPERATURE SENSOR SHORT CIRCUIT TO GROUND	
	1 Connect an ohm-meter to terminal 5 of the transfer case control module wiring harness connector and ground.
	2 Measure the resistance.
	Is the measured resistance infinitely high (open circuit)? **Yes** No short circuit to ground. No fault found. **No** Short circuit to ground. GO to F6.
F6: TRANSFER CASE ACTUATOR TEMPERATURE SENSOR SHORT CIRCUIT TO GROUND	
	1 Disconnect the wiring harness connector from the transfer case actuator.
	2 Connect an ohm-meter to terminal 5 of the transfer case control module wiring harness connector and ground.
	3 Measure the resistance.
	Is the measured resistance infinitely high (open circuit)? **Yes** Short circuit to ground. Install a new transfer case actuator. **No** No short circuit to ground. Check the transfer case actuator wiring harness for short circuit to ground. Repair the wiring harness as necessary.

PINPOINT TEST G : TRANSFER CASE ACTUATOR POSITION SENSOR SIGNAL A CIRCUIT TESTS	
TEST CONDITIONS	**DETAILS/RESULTS/ACTIONS**
G1: TRANSFER CASE WIRING HARNESS AND ACTUATOR POSITION SENSOR SIGNAL A LOW RESISTANCE	

PINPOINT TEST G : TRANSFER CASE ACTUATOR POSITION SENSOR SIGNAL A CIRCUIT TESTS	
	1 Set the ignition to off.
	2 Disconnect the largest wiring harness connector from the transfer case control module.
	3 Connect an ohm-meter to terminal 1 and terminal 2 of the transfer case control module wiring harness connector.
	4 Measure the resistance.
	Is the measured resistance less than 16 kΩ? **Yes** Resistance too low. **GO to G2**. **No** Resistance not too low. **GO to G3**.
G2: TRANSFER CASE ACTUATOR POSITION SENSOR SIGNAL A LOW RESISTANCE	
	1 Disconnect the wiring harness connector from the transfer case actuator.
	2 Connect an ohm-meter to terminal 6 and terminal 7 of the transfer case actuator.
	3 Measure the resistance.
	Is the measured resistance less than 16 kΩ? **Yes** Resistance too low. Install a new transfer case actuator. **No** Resistance not too low. Check the transfer case actuator wiring harness for short circuit between the wires. Repair the wiring harness as necessary.
G3: TRANSFER CASE WIRING HARNESS AND ACTUATOR POSITION SENSOR SIGNAL A HIGH RESISTANCE	
	1 Connect an ohm-meter to terminal 1 and terminal 2 of the transfer case control module wiring harness connector.
	2 Measure the resistance.
	Is the measured resistance greater than 20 kΩ? **Yes** Resistance too high. **GO to G4**. **No** Resistance not too high. **GO to G5**.

PINPOINT TEST G : TRANSFER CASE ACTUATOR POSITION SENSOR SIGNAL A CIRCUIT TESTS	
G4: TRANSFER CASE ACTUATOR POSITION SENSOR SIGNAL A HIGH RESISTANCE	
	1 Disconnect the wiring harness connector from the transfer case actuator.
	2 Connect an ohm-meter to terminal 6 and terminal 7 of the transfer case actuator.
	3 Measure the resistance.
	Is the measured resistance greater than 20 kΩ? **Yes** Resistance too high. Install a new transfer case actuator. **No** Resistance not too high. Check the transfer case actuator wiring harness for open circuit, high resistance. Repair the wiring harness as necessary.
G5: TRANSFER CASE WIRING HARNESS AND ACTUATOR POSITION SENSOR SIGNAL A SHORT CIRCUIT TO GROUND	
	1 Connect an ohm-meter to terminal 1 of the transfer case control module wiring harness connector and ground.
	2 Measure the resistance.
	Is the measured resistance infinitely high (open circuit)? **Yes** No short circuit to ground. No fault found. **No** Short circuit to ground. **GO to G6**.
G6: TRANSFER CASE ACTUATOR POSITION SENSOR SIGNAL A SHORT CIRCUIT TO GROUND	
	1 Disconnect the wiring harness connector from the transfer case actuator.
	2 Connect an ohm-meter to terminal 1 of the transfer case control module wiring harness connector and ground.
	3 Measure the resistance.
	Is the measured resistance infinitely high (open circuit)? **Yes** Short circuit to ground. Install a new transfer case actuator. **No** No short circuit to ground. Check the transfer case actuator wiring harness for short circuit to ground. Repair the wiring harness as necessary.

PINPOINT TEST G : TRANSFER CASE ACTUATOR POSITION SENSOR SIGNAL A CIRCUIT TESTS

PINPOINT TEST H : TRANSFER CASE ACTUATOR POSITION SENSOR SIGNAL B CIRCUIT TESTS	
TEST CONDITIONS	DETAILS/RESULTS/ACTIONS
H1: TRANSFER CASE WIRING HARNESS AND ACTUATOR POSITION SENSOR SIGNAL B LOW RESISTANCE	
	1 Set the ignition to off.
	2 Disconnect the largest wiring harness connector from the transfer case control module.
	3 Connect an ohm-meter to terminal 6 and terminal 2 of the transfer case control module wiring harness connector.
	4 Measure the resistance.
	Is the measured resistance less than 16 kΩ? **Yes** Resistance too low. GO to H2. **No** Resistance not too low. GO to H3.
H2: TRANSFER CASE ACTUATOR POSITION SENSOR SIGNAL B LOW RESISTANCE	
	1 Disconnect the wiring harness connector from the transfer case actuator.
	2 Connect an ohm-meter to terminal 2 and terminal 7 of the transfer case actuator.
	3 Measure the resistance.
	Is the measured resistance less than 16 kΩ? **Yes** Resistance too low. Install a new transfer case actuator. **No** Resistance not too low. Check the transfer case actuator wiring harness for short circuit between the wires. Repair the wiring harness as necessary.
H3: TRANSFER CASE WIRING HARNESS AND ACTUATOR POSITION SENSOR SIGNAL B HIGH RESISTANCE	
	1

PINPOINT TEST H : TRANSFER CASE ACTUATOR POSITION SENSOR SIGNAL B CIRCUIT TESTS	
	Connect an ohm-meter to terminal 6 and terminal 2 of the transfer case control module wiring harness connector.
	2 Measure the resistance.
	Is the measured resistance greater than 20 kΩ? **Yes** Resistance too high. **GO to H4**. **No** Resistance not too high. **GO to H5**.
H4: TRANSFER CASE ACTUATOR POSITION SENSOR SIGNAL B HIGH RESISTANCE	
	1 Disconnect the wiring harness connector from the transfer case actuator.
	2 Connect an ohm-meter to terminal 2 and terminal 7 of the transfer case actuator.
	3 Measure the resistance.
	Is the measured resistance greater than 20 kΩ? **Yes** Resistance too high. Install a new transfer case actuator. **No** Resistance not too high. Check the transfer case actuator wiring harness for open circuit, high resistance. Repair the wiring harness as necessary.
H5: TRANSFER CASE WIRING HARNESS AND ACTUATOR POSITION SENSOR SIGNAL B SHORT CIRCUIT TO GROUND	
	1 Connect an ohm-meter to terminal 6 of the transfer case control module wiring harness connector and ground.
	2 Measure the resistance.
	Is the measured resistance infinitely high (open circuit)? **Yes** No short circuit to ground. No fault found. **No** Short circuit to ground. **GO to H6**.
H6: TRANSFER CASE ACTUATOR POSITION SENSOR SIGNAL B SHORT CIRCUIT TO GROUND	
	1 Disconnect the wiring harness connector from the transfer case actuator.

PINPOINT TEST H : TRANSFER CASE ACTUATOR POSITION SENSOR SIGNAL B CIRCUIT TESTS	
	2 Connect an ohm-meter to terminal 6 of the transfer case control module wiring harness connector and ground.
	3 Measure the resistance.
	Is the measured resistance infinitely high (open circuit)? **Yes** Short circuit to ground. Install a new transfer case actuator. **No** No short circuit to ground. Check the transfer case actuator wiring harness for short circuit to ground. Repair the wiring harness as necessary.

PINPOINT TEST I : AUTOMATIC TRANSMISSION DRAG TORQUE TESTS	
TEST CONDITIONS	DETAILS/RESULTS/ACTIONS
I1: TRANSFER CASE RANGE CHANGE TEST	
	1 Stop the vehicle on a flat level surface.
	2 Allow the engine to idle.
	3 Set the automatic transmission to Neutral.
	NOTE: The vehicle may creep forward when the brakes are released. Allow the vehicle to move if necessary. **4** Release the brakes.
	5 Attempt a transfer case range change.
	Was the transfer case range change successful? **Yes** Automatic transmission drag torque excessively high and resisting a transfer case range change when the vehicle is stationary. Refer to the relevant section of the workshop manual and check the automatic transmission. **No** Automatic transmission drag torque normal.

DTC INDEX

For a list of Diagnostic Trouble Codes (DTCs) that could be logged on this vehicle, please refer to Section 100-00. REFER to: Diagnostic Trouble Code (DTC) Index - DTC: Module Name: Transfer Case Control Module (100-00 General Information, Description and Operation).

EXHAUST SYSTEM – V8 5.0L PETROL/V8 S/C 5.0L PETROL

SPECIFICATIONS

Torque Specifications

DESCRIPTION	NM	LB-FT	LB-IN
Stub pipe to Exhaust manifold	25	18	-
Stub pipe to Exhaust System	47	35	-
Rubber mounting retaining nuts	47	35	-

EXHAUST SYSTEM - V8 5.0L PETROL/V8 S/C 5.0L PETROL

CATALYTIC CONVERTER LH (G1298266)

REMOVAL AND INSTALLATION

17.50.03	CATALYTIC CONVERTER - LH - RENEW	5000 CC, AJ V8	0.5	USED WITHINS	+

SPECIAL TOOL(S)



310-121 (LRT-19-014)

Wrench, HO2S



100-051 (LRT-99-027)

Pipe cutter-exhaust

REMOVAL

1. **WARNING:**

   Do not work on or under a vehicle supported only by a jack. Always support the vehicle on safety stands.

   Raise and support the vehicle.

2. Disconnect the LH catalytic converter from the exhaust manifold.
   - Remove and discard the 2 nuts.

3.

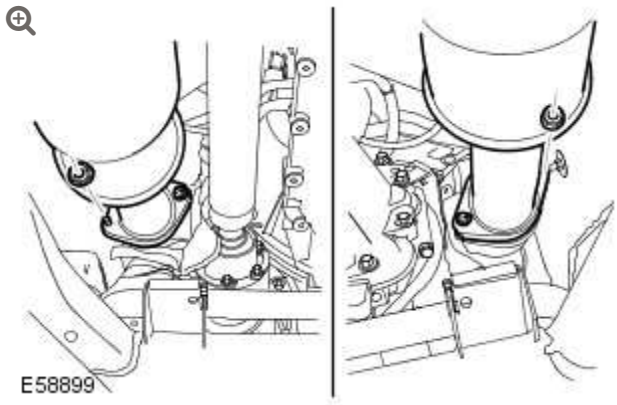

Disconnect the RH catalytic converter from the exhaust manifold.

- Remove and discard the 2 nuts.

4.

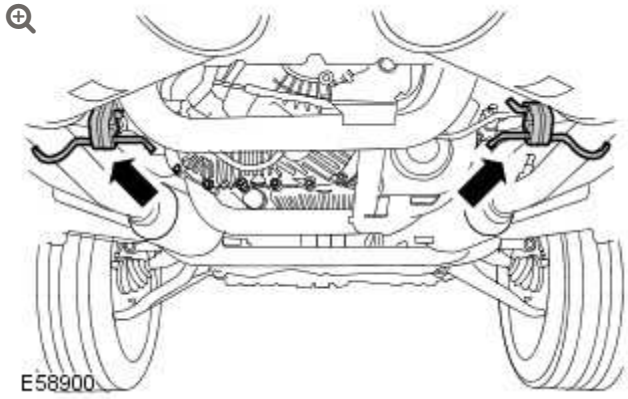

Disconnect the 2 front exhaust hangers.

5.

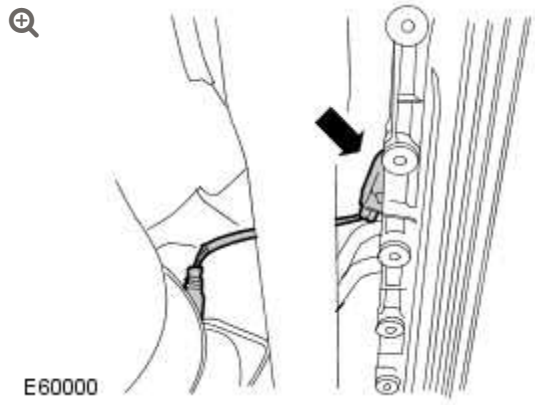

Disconnect the LH heated oxygen sensor (HO2S) electrical connector.

6.

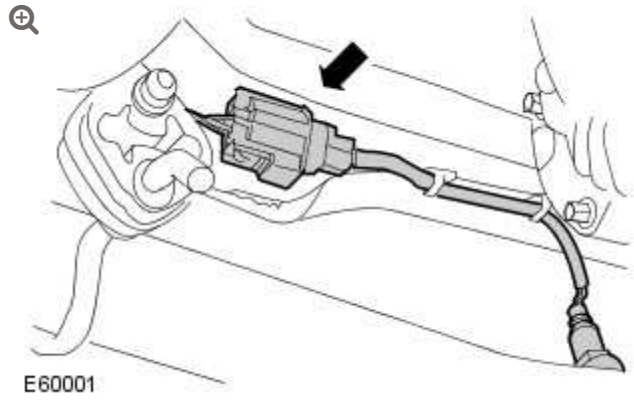

Disconnect the LH catalyst monitor sensor electrical connector.

- Release the wiring harness.

7.

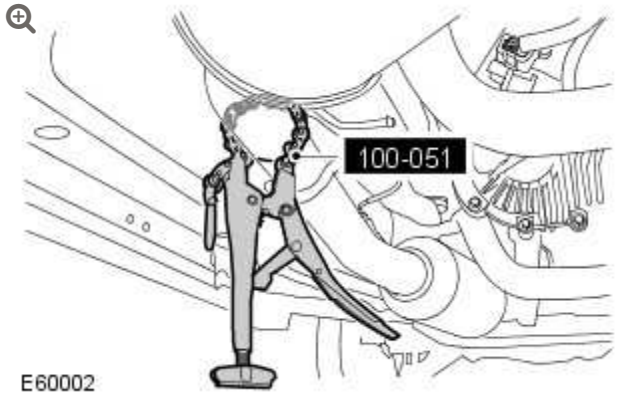

Remove the LH catalytic converter.

- Using the special tool, cut the exhaust pipe at the point indicated by a depression in the pipe.

8. Using the special tool, remove the HO2S.

9. 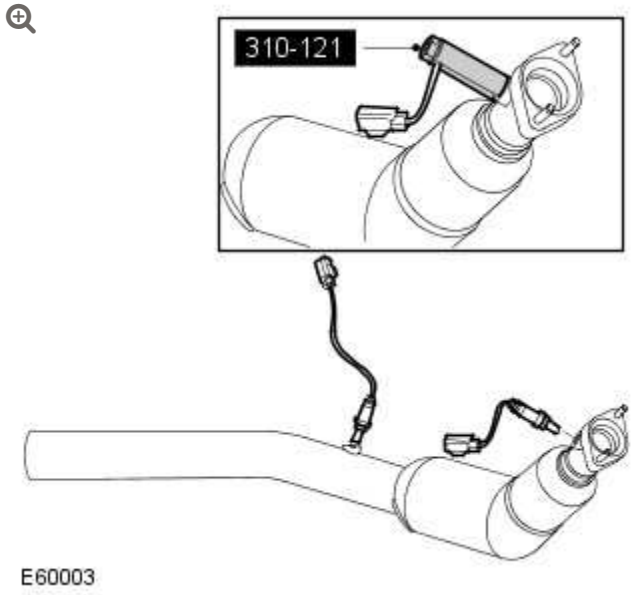

Using the special tool, remove the catalyst monitor sensor.

INSTALLATION

1.

CAUTION:

Make sure the anti-seize compound does not contact the catalyst monitor sensor tip.

Using the special tool, install the catalyst monitor sensor.

- Clean the components.
- Apply an anti-seize compound to the thread of the sensor.
- Tighten the catalyst monitor sensor to 45 Nm (33 lb.ft).

2.

CAUTION:

Make sure the anti-seize compound does not contact the HO2S tip.

Using the special tool, install the HO2S.

- Clean the components.
- Apply an anti-seize compound to the thread of the sensor.
- Tighten the HO2S to 45 Nm (33 lb.ft).

3.

NOTE:

Do not tighten the retaining clamp at this stage.

Install the LH catalytic converter.

- Clean the components.

- Install the retaining clamp.

4. Attach the exhaust hangers.

5. Position the RH catalytic converter to the exhaust manifold.
   - Clean the components.
   - Tighten the new nuts to 20 Nm (15 lb.ft).

6. Position the LH catalytic converter to the exhaust manifold.
   - Clean the components.
   - Tighten the new nuts to 20 Nm (15 lb.ft).

7. Align the LH catalytic converter and tighten the retaining clamp to 55 Nm (40 lb.ft).

EXHAUST SYSTEM - V8 5.0L PETROL/V8 S/C 5.0L PETROL

CATALYTIC CONVERTER RH (G1298267)

REMOVAL AND INSTALLATION

17.50.04	CATALYTIC CONVERTER - RH - RENEW	5000 CC, AJ V8	0.5	USED WITHINS	+
17.50.04	CATALYTIC CONVERTER - RH - RENEW	AJ V8, SUPERCHARGED	0.6	USED WITHINS	+

SPECIAL TOOL(S)



310-121 (LRT-19-014)

Wrench, HO2S



100-051 (LRT-99-027)

Pipe cutter-exhaust

REMOVAL

1. **WARNING:**

   Do not work on or under a vehicle supported only by a jack. Always support the vehicle on safety stands.

   Raise and support the vehicle.

2. Disconnect the LH catalytic converter from the exhaust manifold.
   - Remove and discard the 2 nuts.

3.

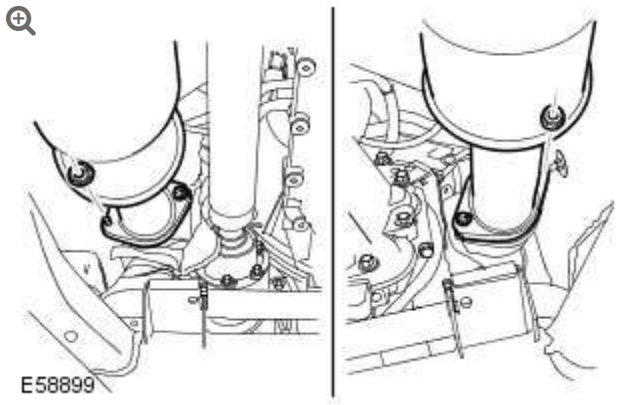

Disconnect the RH catalytic converter from the exhaust manifold.

- Remove and discard the 2 nuts.

4.

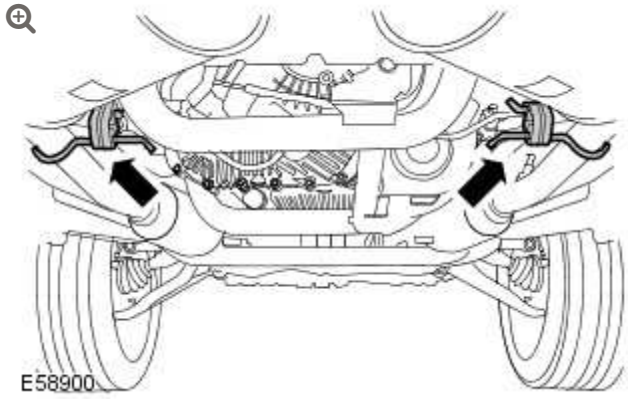

Disconnect the 2 front exhaust hangers.

5.

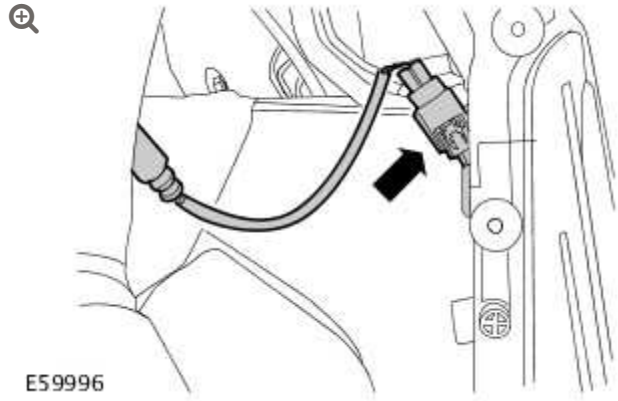

Disconnect the RH heated oxygen sensor (HO2S) electrical connector.

6.

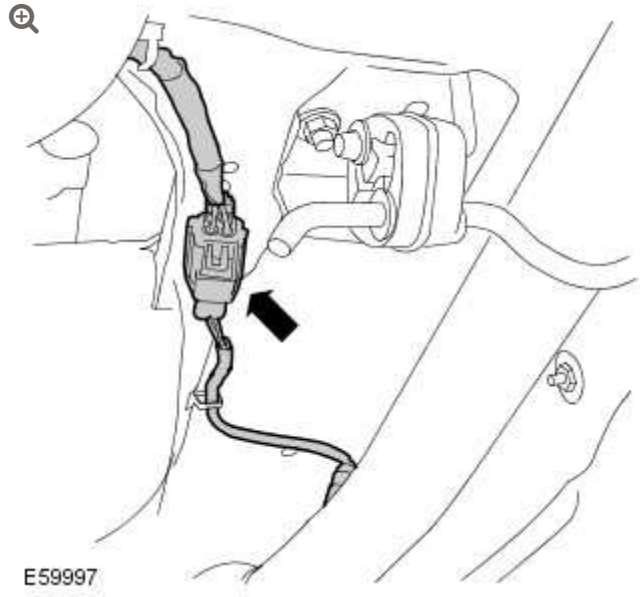

Disconnect the RH catalyst monitor sensor electrical connector.

- Release the wiring harness.

7.

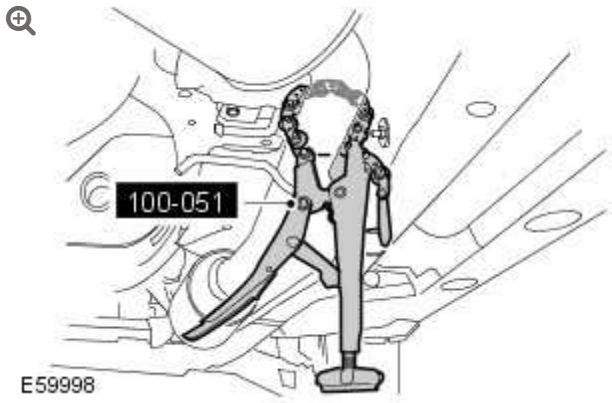

Remove the RH catalytic converter.

- Using the special tool, cut the exhaust pipe at the point indicated by a depression in the pipe.

8. Using the special tool, remove the HO2S.

9. 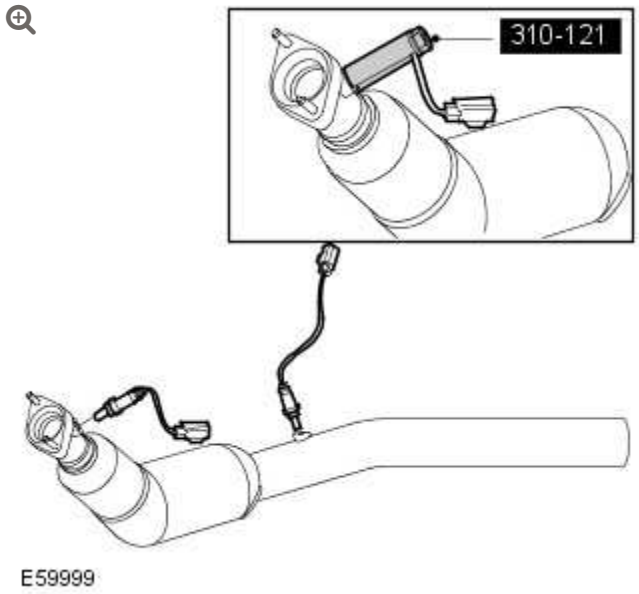

Using the special tool, remove the catalyst monitor sensor.

INSTALLATION

1.

CAUTION:

Make sure the anti-seize compound does not contact the catalyst monitor sensor tip.

Using the special tool, install the catalyst monitor sensor.

- Clean the components.
- Apply an anti-seize compound to the thread of the sensor.
- Tighten the catalyst monitor sensor to 45 Nm (33 lb.ft).

2.

CAUTION:

Make sure the anti-seize compound does not contact the HO2S tip.

Using the special tool, install the HO2S.

- Clean the components.
- Apply an anti-seize compound to the thread of the sensor.
- Tighten the HO2S to 45 Nm (33 lb.ft).

3.

NOTE:

Do not tighten the retaining clamp at this stage.

Install the RH catalytic converter.

- Clean the components.

- Install the retaining clamp.

4. Attach the exhaust hangers.

5. Position the RH catalytic converter to the exhaust manifold.
   - Clean the components.
   - Tighten the new nuts to 20 Nm (15 lb.ft).

6. Position the LH catalytic converter to the exhaust manifold.
   - Clean the components.
   - Tighten the new nuts to 20 Nm (15 lb.ft).

7. Align the RH catalytic converter and tighten the retaining clamp to 55 Nm (40 lb.ft).

EXHAUST SYSTEM – V8 5.0L PETROL/V8 S/C 5.0L PETROL

DIAGNOSIS AND TESTING

PRINCIPLE OF OPERATION

For a detailed description of the exhaust system, refer to the relevant Description and Operation section of the workshop manual. REFER to: Exhaust System (309-00 Exhaust System - V8 5.0L Petrol/V8 S/C 5.0L Petrol, Description and Operation).

INSPECTION AND VERIFICATION

CAUTION:

Diagnosis by substitution from a donor vehicle is **NOT** acceptable. Substitution of control modules does not guarantee confirmation of a fault and may also cause additional faults in the vehicle being checked and/or the donor vehicle.

NOTE:

Check and rectify basic faults before beginning diagnostic routines involving pinpoint tests.

1. Verify the customer concern.
2. Visually inspect for obvious signs of mechanical or electrical damage.

Visual Inspection

MECHANICAL	ELECTRICAL
▪ Leaks ▪ Metal fatigue ▪ Pipes ▪ Catalytic converter ▪ Muffler(s) ▪ Joints ▪ Mountings ▪ Clearance around components	▪ Fuses ▪ Wiring harness ▪ Electrical connector(s) ▪ Sensor(s) ▪ Engine Control Module (ECM)

3. If an obvious cause for an observed or reported concern is found, correct the cause (if possible) before proceeding to the next step.
4. If the cause is not visually evident, verify the symptom and refer to the Symptom Chart, alternatively check for Diagnostic Trouble Codes (DTCs) and refer to the DTC Index.

SYMPTOM CHART

SYMPTOM	POSSIBLE CAUSES	ACTION
Noisy or leaking exhaust	▪ Exhaust system/components	Install new components as necessary. Refer to the relevant section of the workshop manual.
Lack of power	▪ Air intake system fault ▪ Restricted exhaust system ▪ Low fuel pressure	Check the air intake system. Check for a blocked catalytic converter or muffler, install new components as necessary. Check the fuel pressure. Refer to the relevant section of the workshop manual.

DTC INDEX

For a complete list of all Diagnostic Trouble Codes (DTCs) that could be logged on this vehicle, please refer to Section 100-00.
REFER to: Diagnostic Trouble Code (DTC) Index - V8 5.0L Petrol/V8 S/C 5.0L Petrol (100-00 General Information, Description and Operation).

EXHAUST SYSTEM – V8 5.0L PETROL/V8 S/C 5.0L PETROL

EXHAUST SYSTEM (G1224565)

REMOVAL AND INSTALLATION

GENERAL EQUIPMENT

EQUIPMENT NAME
Transmission jack

REMOVAL

NOTE:

Removal steps in this procedure may contain installation details.

1. Disconnect the battery ground cable.
   Refer to: Specifications (414-00, Specifications).

2. **WARNINGS:**

   - Make sure to support the vehicle with axle stands.
   - Observe due care when working near a hot exhaust system.

Raise and support the vehicle.

3.

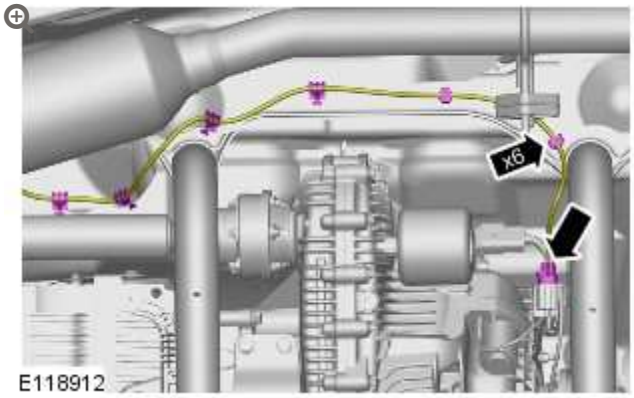

4.

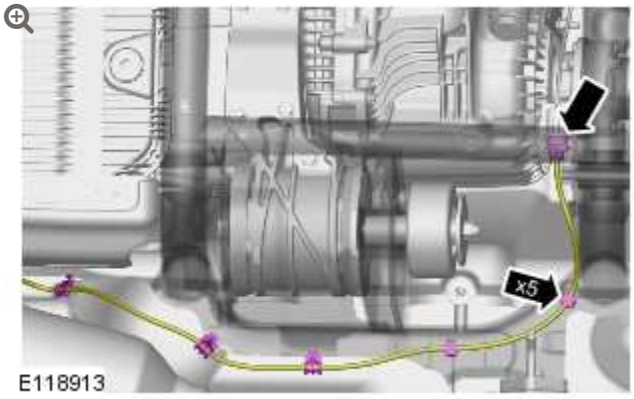

5.

CAUTION:

Make sure that the exhaust system is supported with suitable retaining straps.

NOTE:

Left-hand shown, right-hand similar.

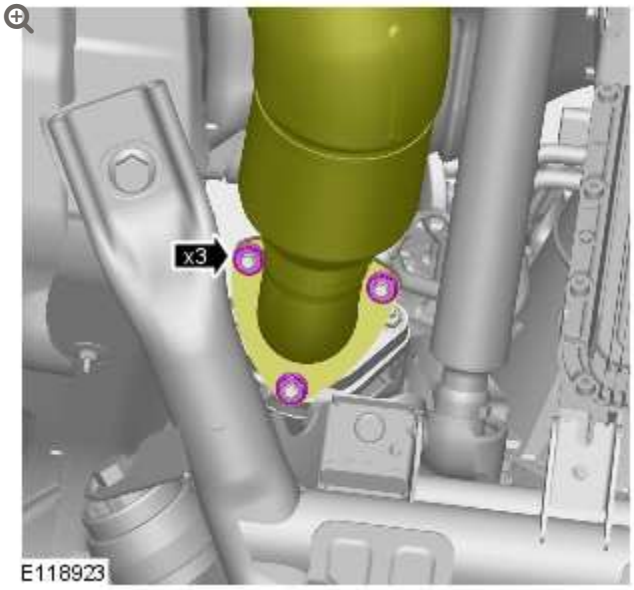

Torque: **47 Nm**

6.

CAUTION:

Make sure that the exhaust system is supported with suitable retaining straps.

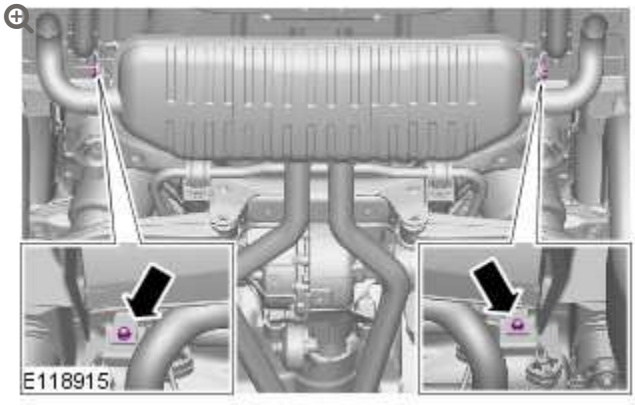

Torque: **47 Nm**

7.

CAUTION:

Make sure that the exhaust system is supported with suitable retaining straps.

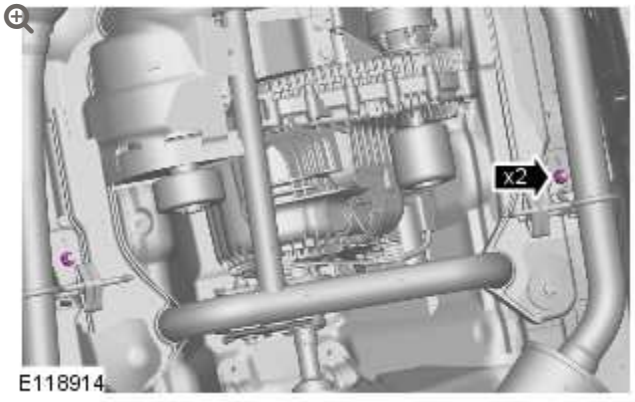

General Equipment: Transmission jack

Torque: **47 Nm**

8.

NOTES:

- Do not disassemble further if the component is removed for access only.
- Some variation in the illustrations may occur, but the essential information is always correct.

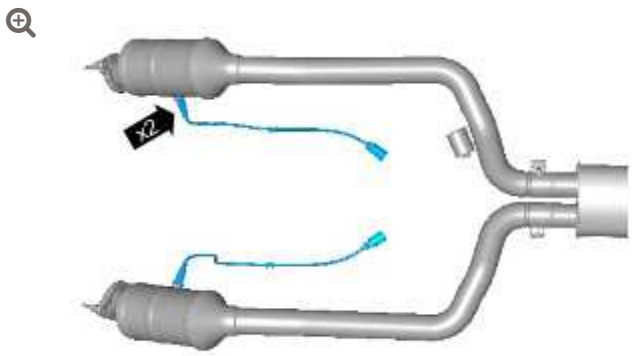

E114565

INSTALLATION

1. To install, reverse the removal procedure.

2012.0 RANGE ROVER (LM), 309-00

EXHAUST SYSTEM – V8 5.0L PETROL/V8 S/C 5.0L PETROL

DESCRIPTION AND OPERATION

5.0L V8 COMPONENT LOCATION – FROM 2010MY

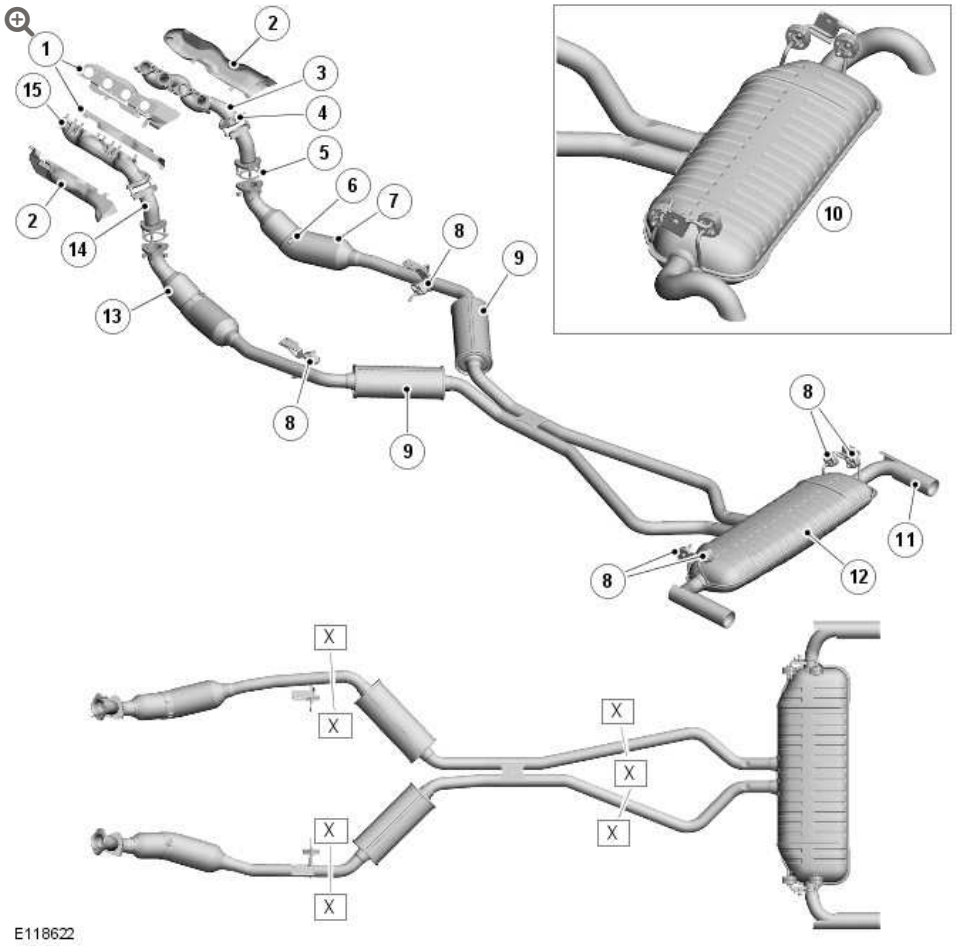

ITEM	DESCRIPTION
X - X	Service repair cut point
1	Exhaust manifold gasket (2 off)
2	Exhaust manifold heat shield (2 off)
3	Right Hand (RH) exhaust manifold
4	Pre-catalyst heated oxygen sensor (HO2S) threaded boss (1 per manifold)
5	Gasket (2 off)
6	Post starter catalyst HO2S threaded boss (1 per catalyst)
7	Main catalyst (2 off)
8	Rubber mounting
9	Centre silencer (2 off)
10	Naturally aspirated rear silencer and tail pipes
11	Tail pipe trim (Supercharger only)
12	Supercharger rear silencer and tail pipes
13	Starter catalyst (2 off)
14	Stub pipe (2 off)
15	Left Hand (LH) exhaust manifold

EXHAUST SYSTEM

The 5.0L V8 stainless steel exhaust system is supplied from the factory as a one-piece assembly and is connected to the engine with two exhaust manifolds. It is attached to the underside of the body with six rubber mountings.

The system comprises 2 stub pipes which are used to connect the system to the exhaust manifold. The stub pipes connect to the system with 3 studs and locknut. A gasket seals the joint between the stub pipe and the system.

A catalytic converter is welded into each down pipe in the system and comprises a starter catalyst and a main catalyst. An intermediate pipe is welded to the opposite end of each catalytic converter and connect into welded joints with the 2 centre silencers. Each centre silencer has a capacity of 5 litres. Three baffle plates inside the silencer are connected by tubes with the rear most tube being perforated. The two compartments between the two rear most baffle plates are packed with steel wool and glass fibre packing to absorb combustion noise as the exhaust gasses pass through the silencer.

A connecting pipe is welded between each centre silencer and the rear silencer assembly. Internally the rear silencer assembly is divided into two independent silencers each with its own tailpipe. The tailpipes on the naturally aspirated derivative are curved downwards and not visible from the rear of the vehicle. The tail pipes on supercharger vehicles are straight and fitted with a stainless steel finisher.

The rear silencer is divided into 2 separate compartments, although the centre baffle plate which divides them has a perforated section to allow gasses to pass from one side to the other. Each compartment has 2 baffle plates connected by an inlet tube. The inlet tube allows gasses to pass into the centre compartment through a perforated section and the remaining gasses are passed into the outer compartment. The outer compartment is packed with steel wool and glass fibre to further absorb combustion noise as exhaust gasses pass between the baffle plate and exit through the tail pipe.

Although supplied from the factory as a one-piece, welded assembly, in service sections of the system can be replaced individually. Service joints are identified by indentations on the pipes, to show where the exhaust pipes can be cut to accommodate the replacement service sections.

After the replacement sections are positioned, the system integrity is restored by sealing the service joints with one piece repair sleeves.

EXHAUST MANIFOLDS

The fabricated stainless steel twin skin exhaust manifolds are unique for each cylinder bank. Spacers on the securing bolts allow the manifolds to expand and retract with changes of temperature while maintaining the clamping loads. Heat shields are integrated into the exhaust manifold gaskets. Each manifold has a threaded port near to its outlet which allows for the fitment of the pre-catalyst HO2S.

CATALYTIC CONVERTERS

The engine management system provides accurately metered quantities of fuel to the combustion chambers to ensure the most efficient use of fuel and to minimise the exhaust emissions. A threaded boss is located on each manifold and a and another threaded boss is located between the starter and the main catalyst to house the pre and post catalyst oxygen sensors. The engine management system monitors the sensors and uses the information to further improve the fuelling and exhaust emissions.

To further reduce the carbon monoxide and hydrocarbons content of the exhaust gases, two catalytic converters are integrated into the front down pipe from each exhaust manifold. In the catalytic converter the exhaust gases are passed through honeycombed ceramic elements coated with a special surface treatment called 'washcoat'. The washcoat increases the surface area of the ceramic elements by a factor of approximately 7000. On top of the washcoat is a coating containing metals, which are the active constituent for converting harmful emissions into inert by-products. The metals add oxygen to the carbon monoxide and the hydrocarbons in the exhaust gases, to convert them into carbon dioxide and water respectively.

Two catalytic converters are used in each cylinder bank down pipe. A starter and main catalyst are located below the downpipe flange. The

starter catalyst is monitored by two HO2S (heated oxygen sensor)'s. The main catalyst is not monitored.

EXHAUST SYSTEM - V8 5.0L PETROL/V8 S/C 5.0L PETROL

FRONT MUFFLER (G1307407)

REMOVAL AND INSTALLATION

SPECIAL TOOL(S)



100-051

Cutter, Exhaust Pipe

REMOVAL

1. Raise and support the vehicle.

2.

CAUTION:

Make sure that the exhaust system is supported with a suitable transmission stand.

NOTE:

Using the special tool, cut the exhaust pipe at the marked position.

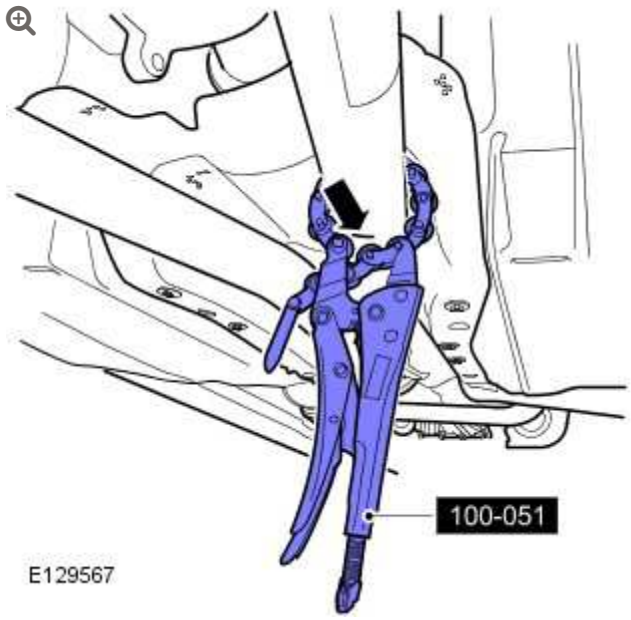

- *Special Tool(s):* 100-051

3.

NOTE:

Using the special tool, cut the exhaust pipe at the marked position.

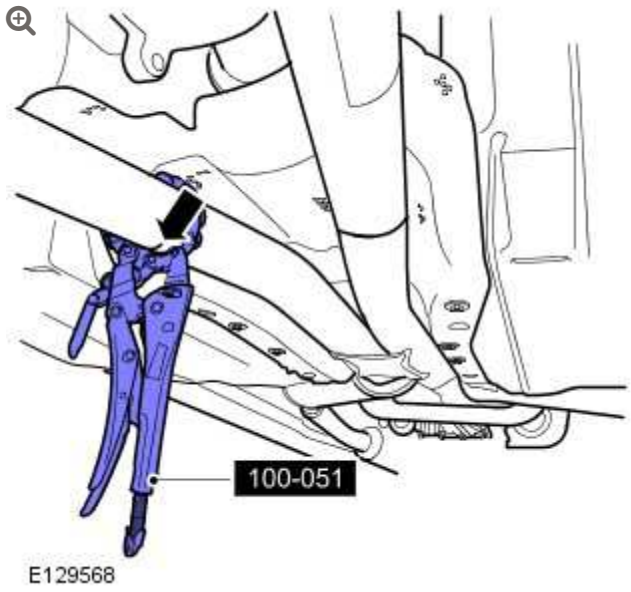

4.

NOTE:

Using the special tool, cut the exhaust pipe at the marked position.

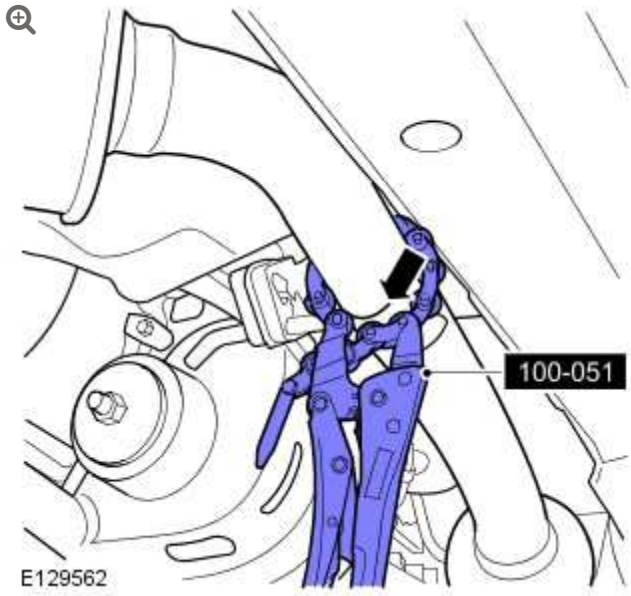

5.

NOTE:

Using the special tool, cut the exhaust pipe at the marked position.

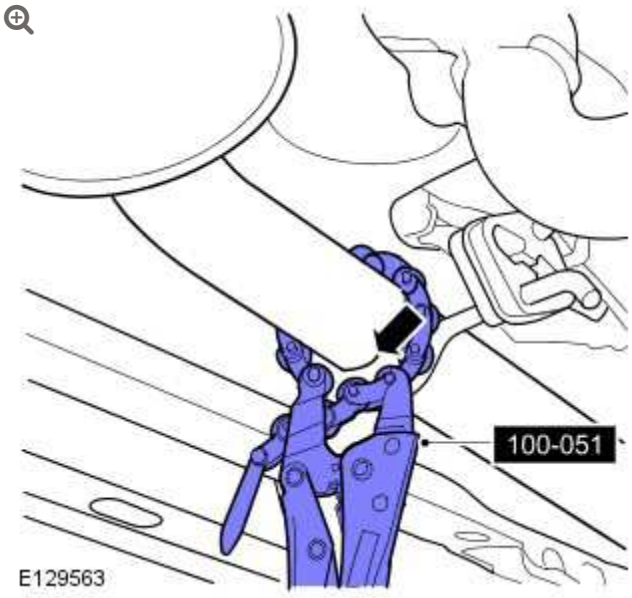

6.

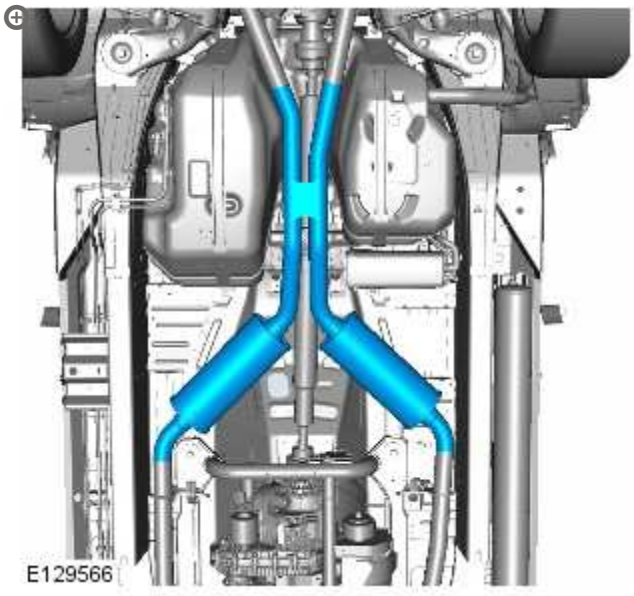

INSTALLATION

1.

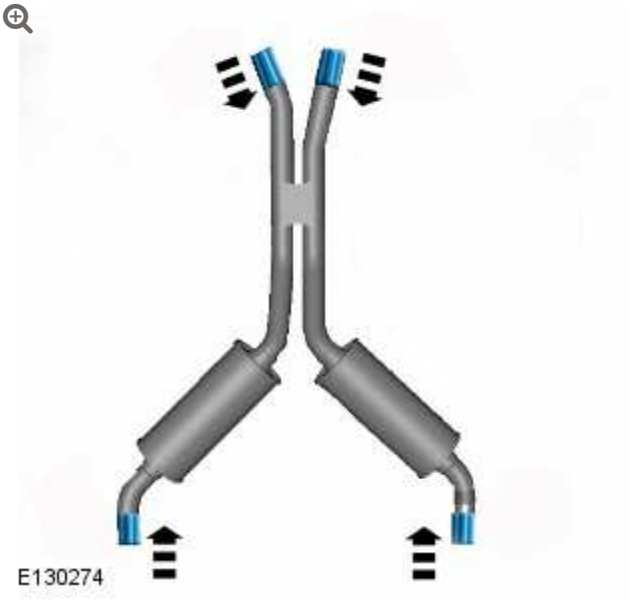

2.

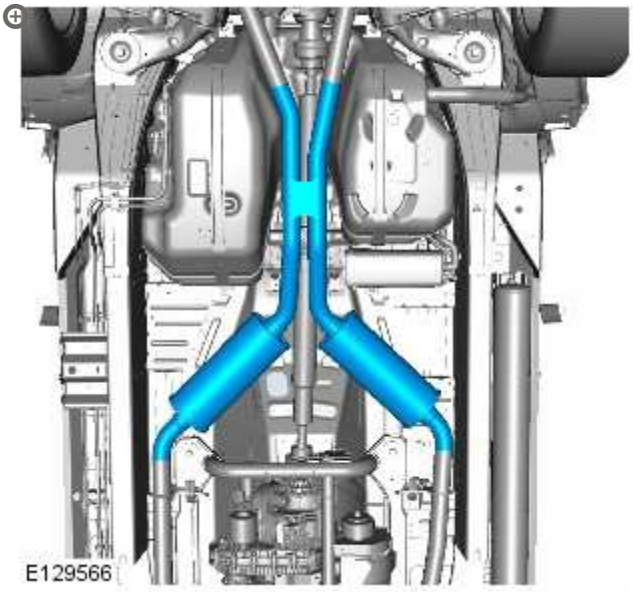

3.

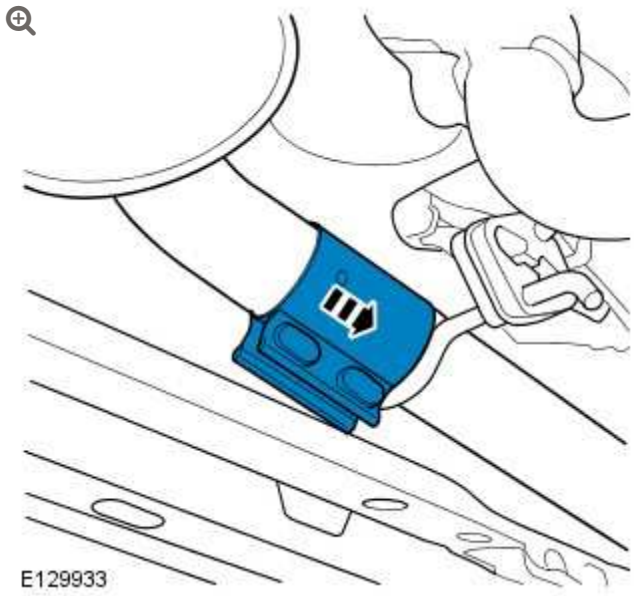

Torque: **55 Nm**

4.

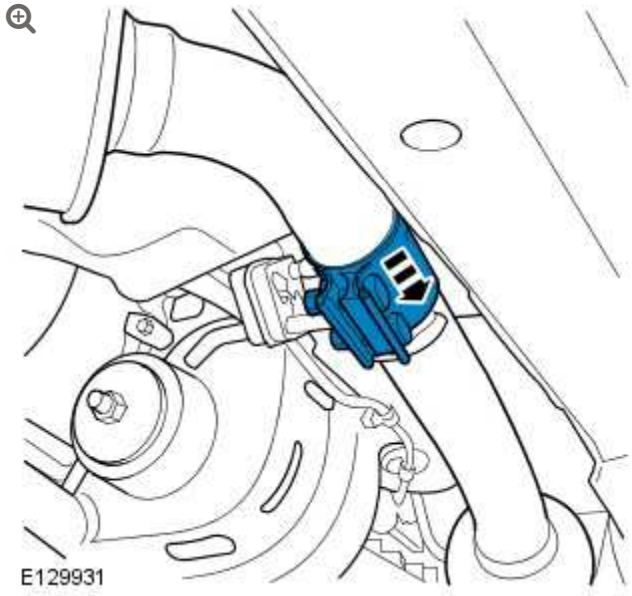

Torque: **55 Nm**

5.

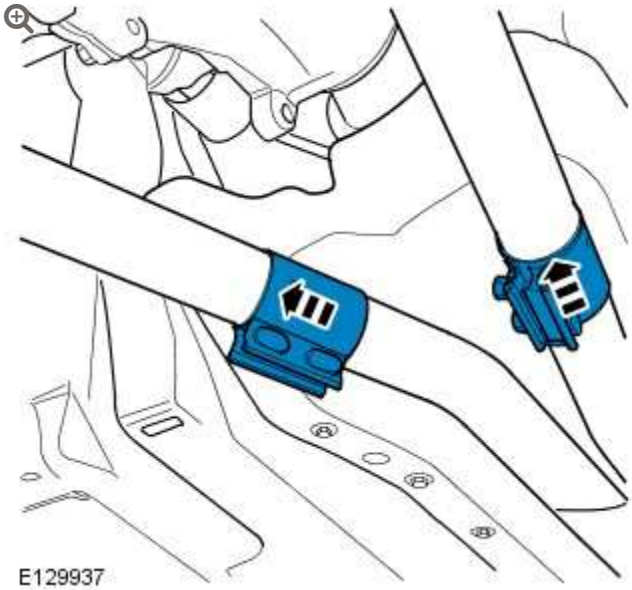

Torque: **55 Nm**

6. 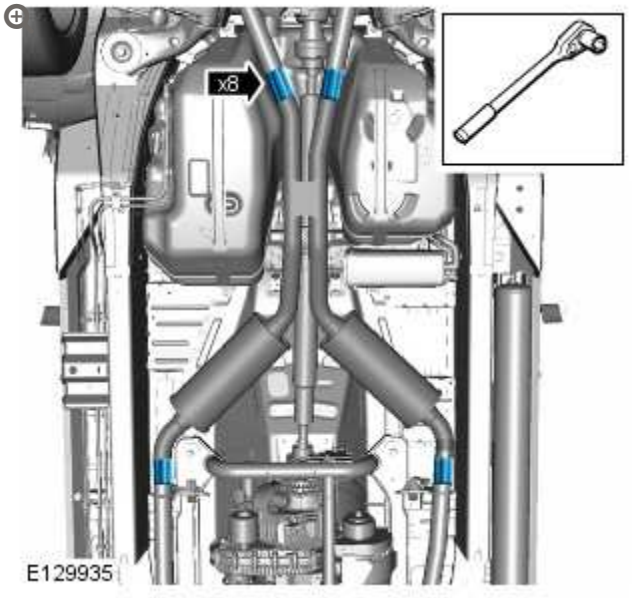

Torque: **55 Nm**

7. Lower the vehicle.

EXHAUST SYSTEM – V8 5.0L PETROL/V8 S/C 5.0L PETROL

REAR MUFFLER (G1307408)

REMOVAL AND INSTALLATION

30.10.22	TAILPIPE AND MUFFLER - RENEW	AJ V8, SUPERCHARGED	0.4	USED WITHINS	+

SPECIAL TOOL(S)



100–051

Cutter, Exhaust Pipe

REMOVAL

1. Raise and support the vehicle.

2. **CAUTION:**

   Make sure that the exhaust system is supported with a suitable transmission stand.

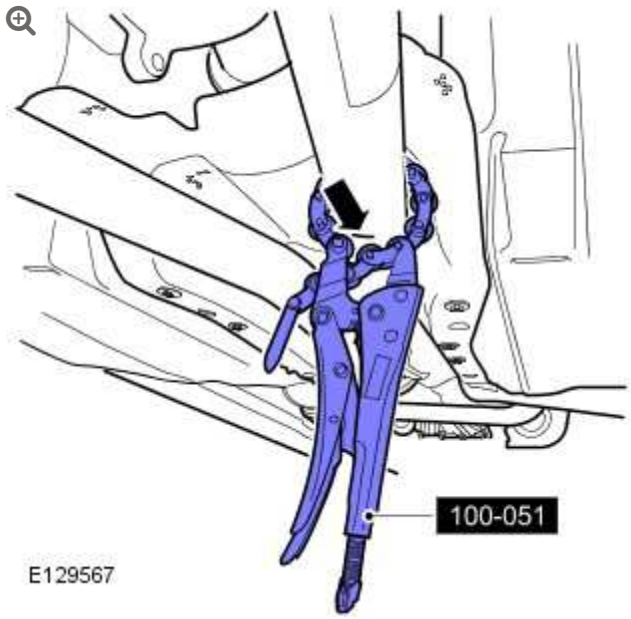

- *Special Tool(s):* 100-051

3.

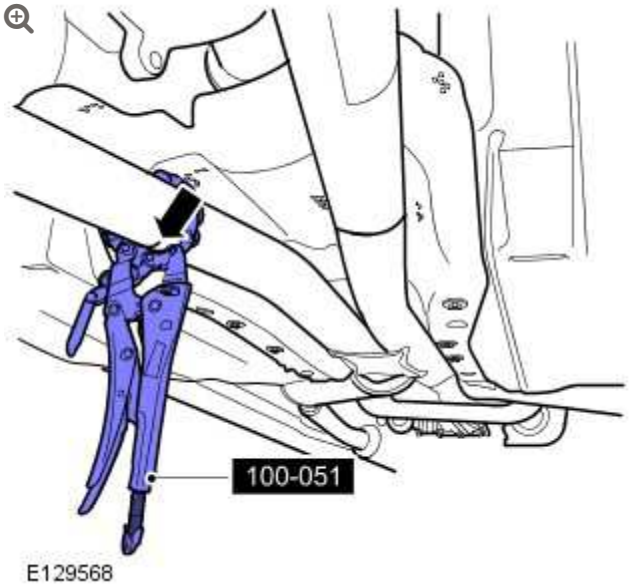

4.

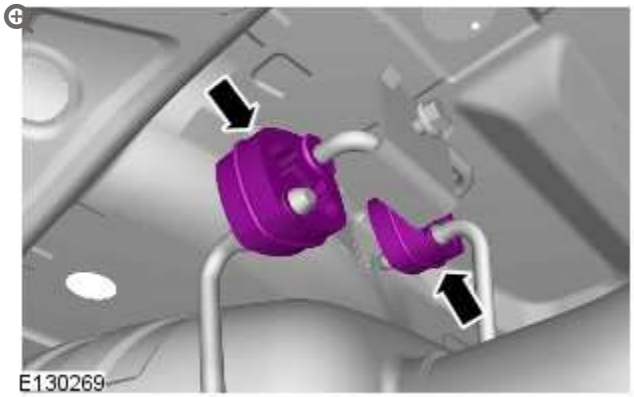

5.

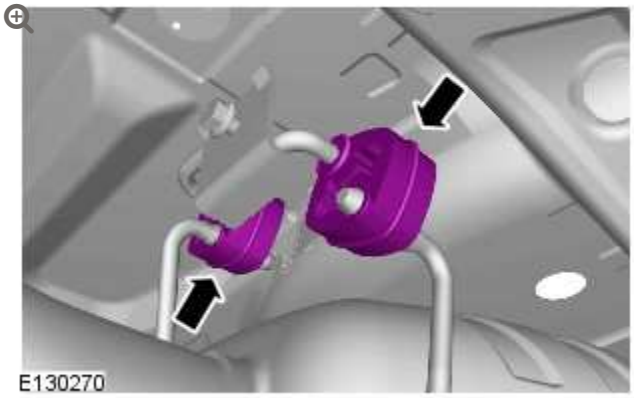

6.

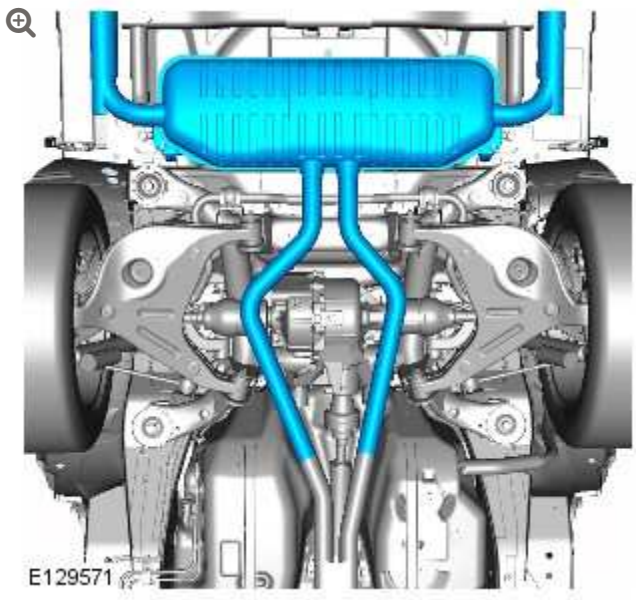

INSTALLATION

1.

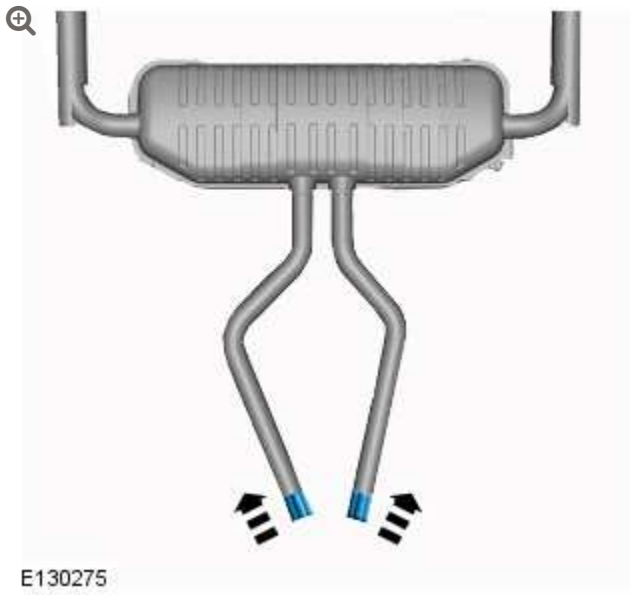

2.

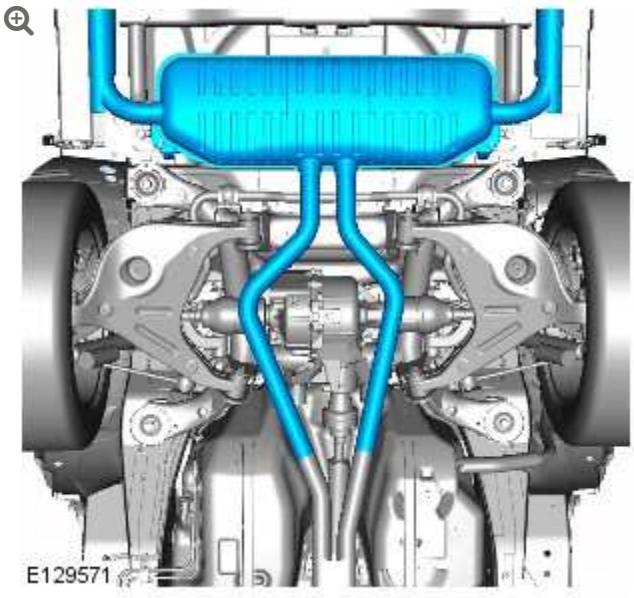

3.

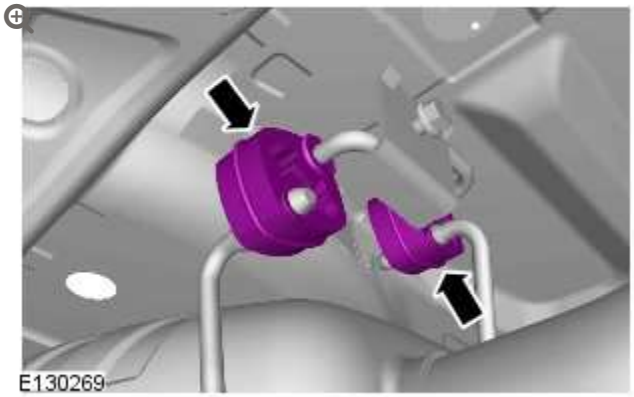

4.

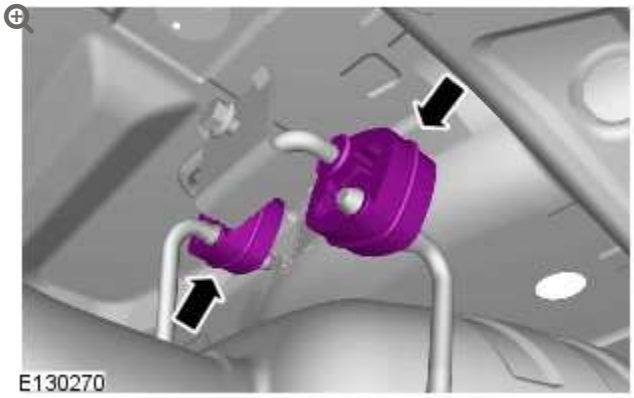

5.

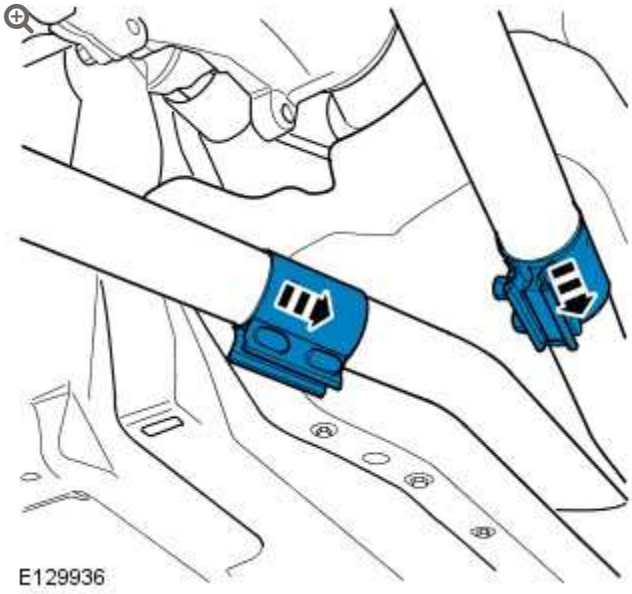

6.

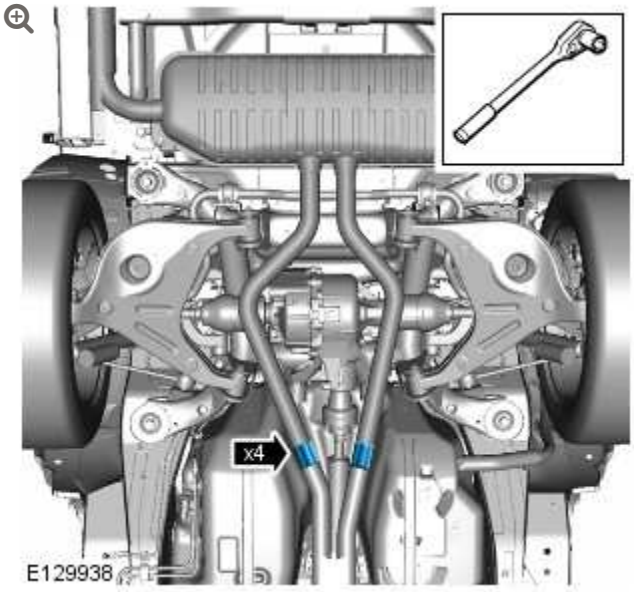

Torque: **55 Nm**

7. Lower the vehicle.

FUEL SYSTEM – GENERAL INFORMATION

SPECIFICATIONS

Torque Specifications

ITEM	NM	LB-FT	LB-IN
Rear seat locking down bar bolts	45	33	-
Fuel tank access cover nuts	10	7	-
Fuel pump and sender unit locking ring	35	26	-

FUEL SYSTEM - GENERAL INFORMATION

FUEL SYSTEM PRESSURE RELEASE - V8 5.0L PETROL/V8 S/C 5.0L PETROL (G1224074)

GENERAL PROCEDURES

19.50.02	FUEL SYSTEM - DEPRESSURISE	5000 CC, AJ V8	0.1	USED WITHINS
19.50.02	FUEL SYSTEM - DEPRESSURISE	AJ V8, SUPERCHARGED	0.3	USED WITHINS

DRAINING

1. **WARNING:**

   Refer to: Petrol and Petrol-Ethanol Fuel Systems Health and Safety Precautions (100-00 General Information, Description and Operation).

2. Remove the fuel pump fuse.

3. Remove the fuel filler cap.

4. Start the engine and allow it to idle until the engine stalls.

5. Crank the engine for approximately five seconds to make sure that the fuel rail pressure is released.

FILLING

6. **NOTE:**

> Make sure all repairs have been carried out before proceeding to the following steps.

Install the fuel pump fuse.

7. Install the fuel filler cap..

8. Read and clear stored DTC fault codes.

FUEL SYSTEM – GENERAL INFORMATION

FUEL TANK DRAINING (G1328580)

GENERAL PROCEDURES

19.55.02	TANK – DRAIN FUEL	ALL DERIVATIVES	0.8	USED WITHINS

SPECIAL TOOL(S)



310–118

Fuel Tank Sender Wrench

WARNINGS:

- Place the vehicle in a well ventilated, quarantined area and arrange ' No Smoking/Petrol Fumes' signs about the vehicle.
- Do not carry or operate cellular phones when working on or near any fuel related components. Highly flammable vapors are always present and may ignite. Failure to follow these instructions may result in personal injury.
- Do not smoke or carry lighted tobacco or open flame of any type when working on or near any fuel related components. Highly flammable vapors are always present and may ignite. Failure to follow these instructions may result in personal injury.
- The spilling of fuel is unavoidable during this operation. Ensure that all necessary precautions are taken to prevent fire and explosion.

CAUTION:

Before disconnecting or removing components, ensure the area around the joint faces and connections are clean. Plug open connections to prevent contamination.

NOTE:

Removal steps in this procedure may contain installation details.

1.

For additional information, refer to: Diesel Fuel System Health and Safety Precautions (100-00, Description and Operation).

2. Disconnect the battery ground cable.
   For additional information, refer to: Specifications (414-00, Specifications).

3. 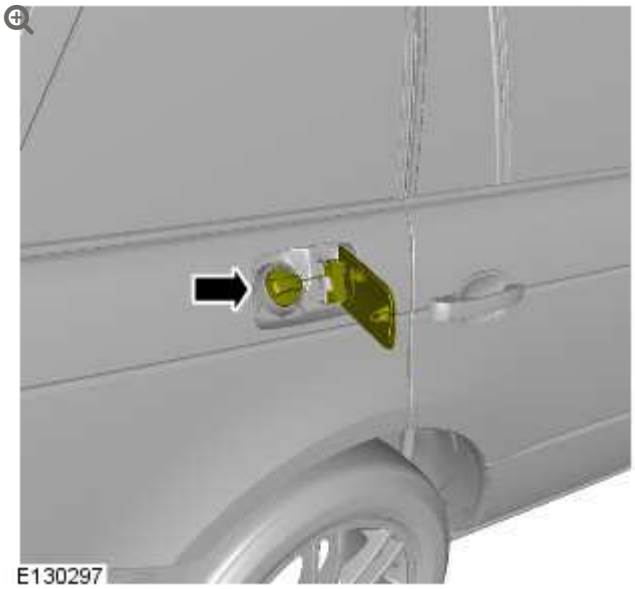

   Open the fuel filler door and remove the cap.

4. Connect the fuel tank drain equipment ground cable to the vehicle.

5. Remove the fuel from the fuel tank, via the filler neck, using the fuel tank draining equipment. Follow the manufacturer's operating instructions.

6. Remove the RH C-pillar lower trim panel.
   For additional information, refer to: C-Pillar Lower Trim Panel (501-05, Removal and Installation).

7.

Remove the LH C-pillar lower trim panel.
For additional information, refer to: C-Pillar Lower Trim Panel (501-05, Removal and Installation).

8.

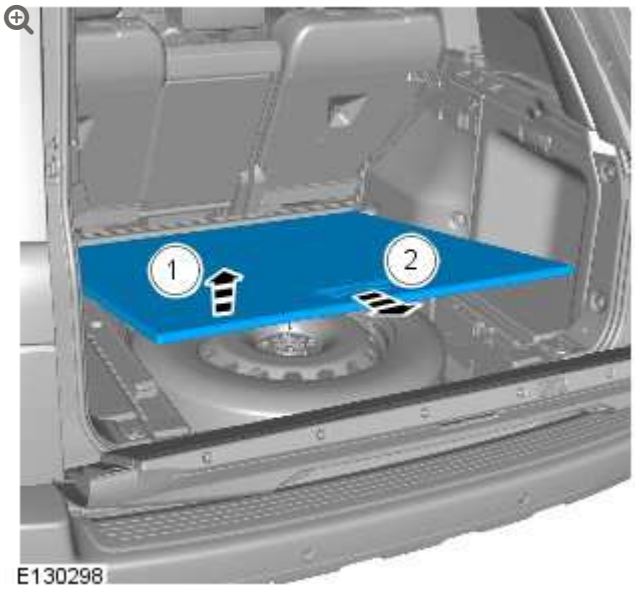

Remove the loadspace floor panel.

9.

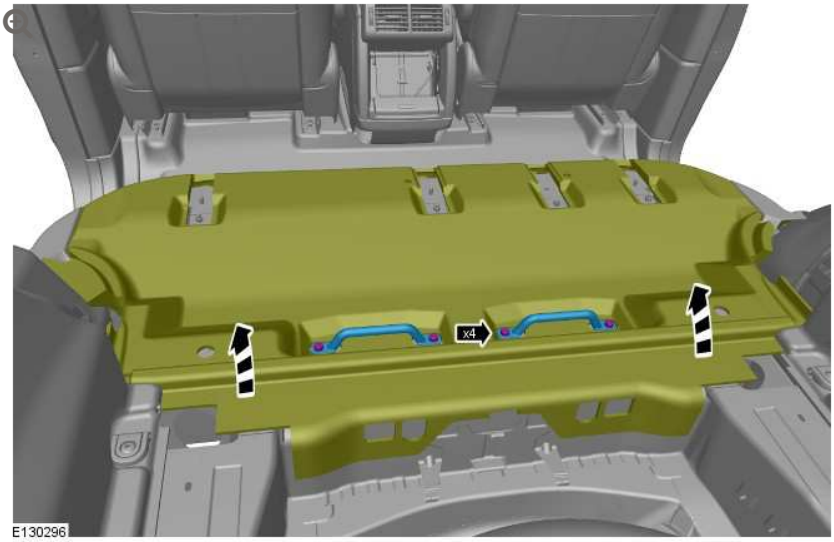

Tie aside the floor carpet.

- Remove the rear seat locking down bars.
- Tighten the bolts to 45 Nm.

10.



Remove the LH fuel tank access cover.

- Remove the 4 nuts.
- Tighten the nuts to 10 Nm.

11.

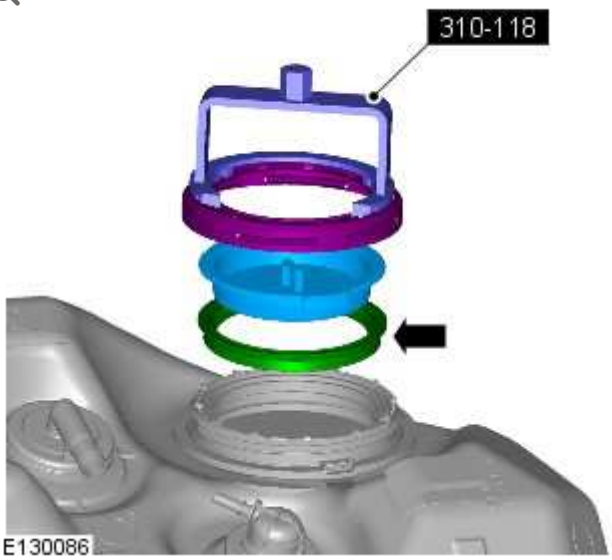

Remove the LH fuel sender cover.

- Using the special tool, remove the fuel sender cover locking ring.
- Release the LH fuel sender cover.
- Tighten the locking ring to 35 Nm.

12.

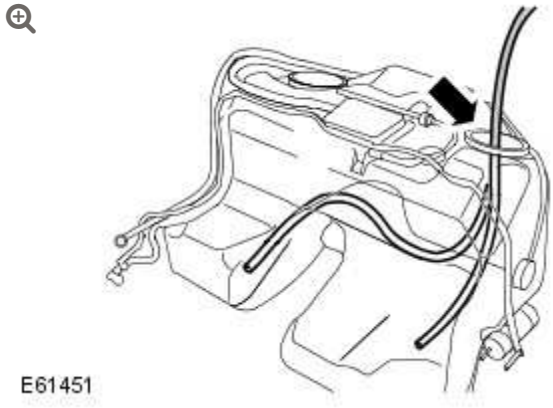

Remove the remaining fuel from the fuel tank, via the LH sender unit access aperture, using the fuel tank draining equipment. Follow the manufacturer's operating instructions.

13. To install, reverse the removal procedure.

FUEL TANK AND LINES – V8 5.0L PETROL/V8 S/C 5.0L PETROL

SPECIFICATIONS

Capacity

ITEM	LITERS
Fuel tank capacity	104.5 (total)

General Specifications

ITEM	SPECIFICATIONS
Fuel system	Electronic - returnless
Fuel tank	Multi layer plastic
Fuel tank sender units	Two - Left and right - Left-hand sender is attached to the frame of the Jet pump and the right-hand sender is attached to the fuel pump swirl pot
Fuel filter	Located in the fuel tank - if the fuel filter becomes blocked a new fuel pump and sender unit must be installed
Fuel pump	Dual stage electric - submersible - located in fuel tank
System pressure	4.5 bar - 65.3 lbf/in2
Starting pressure	6.3 bar - 91.4 lbf/in2

Torque Specifications

ITEM	NM	LB-FT	LB-IN
Fuel tank filler pipe bracket M6 retaining nut	9	-	80
Fuel tank filler pipe bracket M5 retaining nut	4	-	35
Fuel tank shield retaining bolts	22	16	-
Fuel tank shield retaining nuts	22	16	-
Fuel tank heat shield retaining screws	5	-	44
Fuel tank retaining bolts	19	14	-
Evaporative emissions canister retaining bolts	19	14	-
Fuel / vapor tube bracket to underbody retaining bolts	7	-	62
Fuel tank access cover retaining nuts	10	7	-
Fuel pump and sender unit locking ring	35	26	-

FUEL TANK AND LINES - V8 5.0L PETROL/V8 S/C 5.0L PETROL

FUEL FILTER (G1224133)

REMOVAL AND INSTALLATION

19.25.02	FILTER - MAIN - RENEW	5000 CC, AJ V8	0.3	USED WITHINS	+

SPECIAL TOOL(S)



310-118 (LRT-19-009)

Wrench, Fuel Tank Module

REMOVAL

WARNINGS:

- After carrying out repairs, the fuel system must be checked visually for leaks. Failure to follow this instruction may result in personal injury.
- This procedure involves fuel handling. Be prepared for fuel spillage at all times and always observe fuel handling precautions. Failure to follow these instructions may result in personal injury.

CAUTIONS:

- Always carry out the cleaning process before carrying out any repairs to the fuel injection system components. Failure to follow this instruction may result in foreign matter ingress to the fuel injection system.
- Make sure the workshop area in which the vehicle is being worked on is as clean and as dust free as possible. Foreign matter from work on clutches, brakes or from machining or welding operations can contaminate the fuel system and may result in later malfunction.

NOTE:

Removal steps in this procedure may contain installation details.

---

1. **WARNING:**

For additional information, refer to: Petrol and Petrol-Ethanol Fuel Systems Health and Safety Precautions (100-00, Description and Operation).

2. Disconnect the battery ground cable.
   For additional information, refer to: Specifications (414-00, Specifications).

3. For additional information, refer to: Fuel System Pressure Release - 5.0L (310-00, General Procedures).

4. 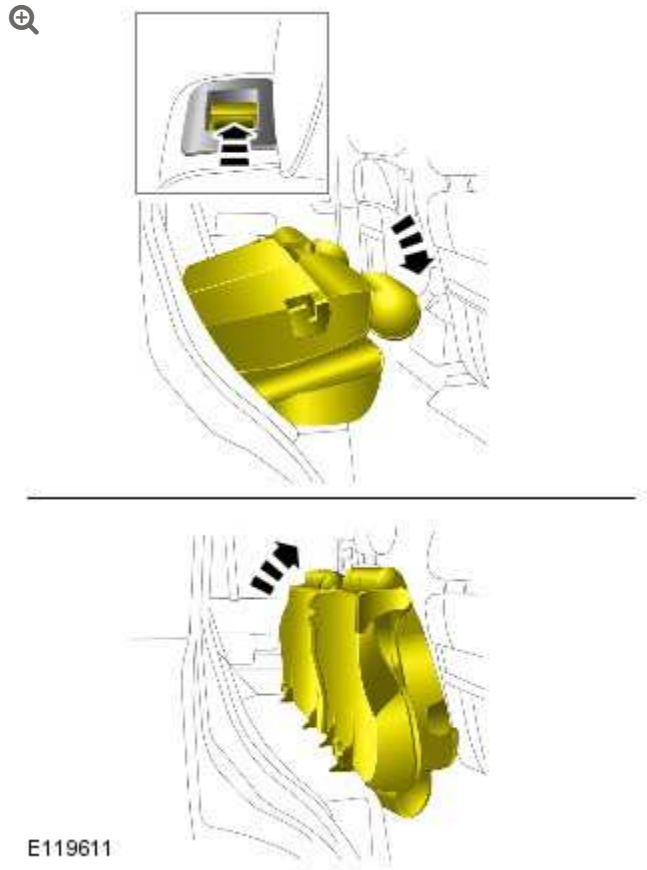

5.



Remove the 4 nuts and remove the fuel tank access cover.

- TORQUE: 10 Nm

6.

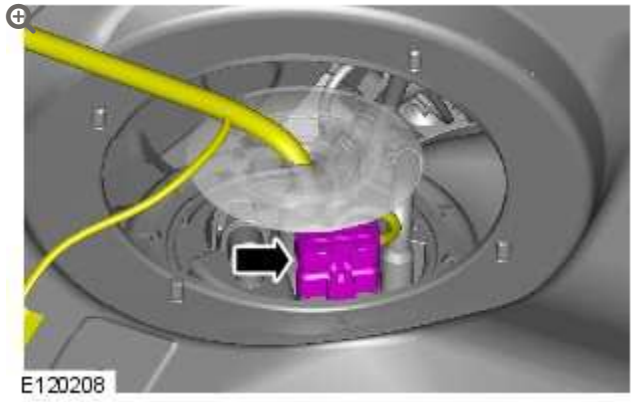

7.

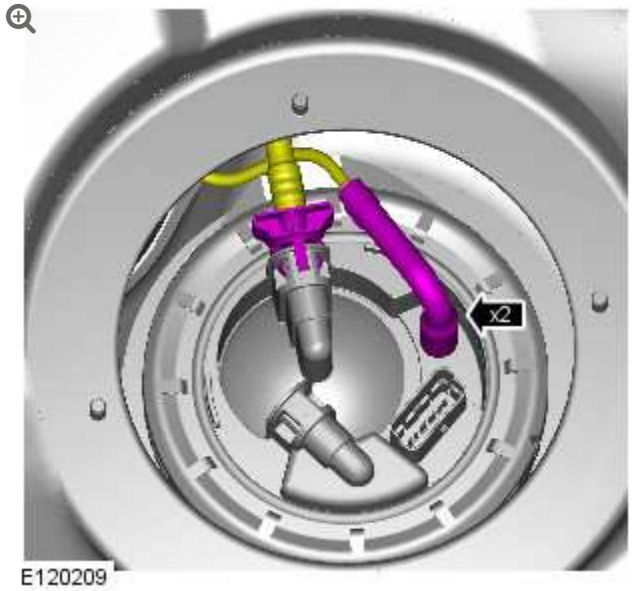

8.

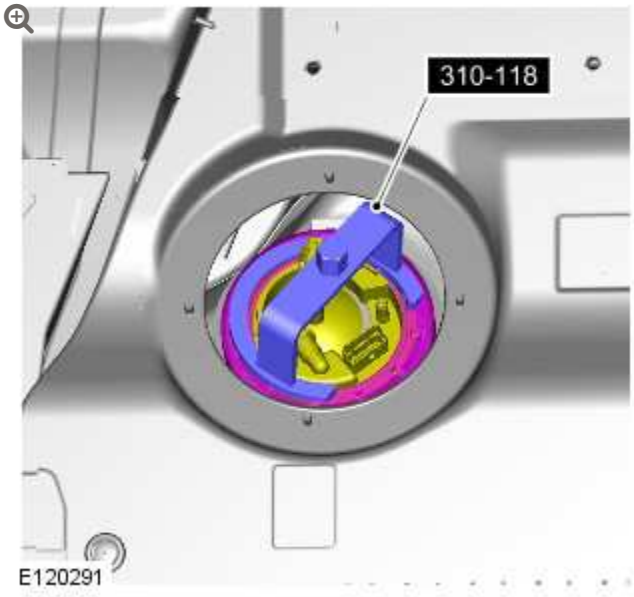

- TORQUE: 35 Nm

9.

WARNING:

Be prepared to collect escaping fuel.

CAUTION:

A new O-ring seal is to be installed.

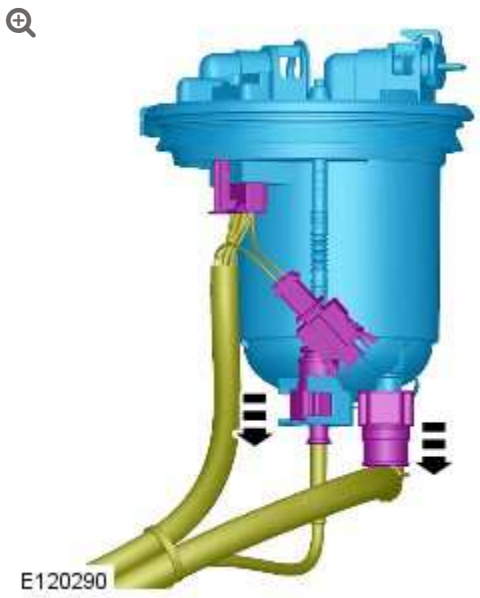

INSTALLATION

1. To install, reverse the removal procedure.

FUEL TANK AND LINES - V8 5.0L PETROL/V8 S/C 5.0L PETROL

FUEL TANK (G1224132)

REMOVAL AND INSTALLATION

19.55.01	TANK - RENEW	5000 CC, AJ V8	3.7	USED WITHINS	+

SPECIAL TOOL(S)



310-118 (LRT-19-009)

Wrench, Fuel Tank Module

REMOVAL

WARNINGS:

- After carrying out repairs, the fuel system must be checked visually for leaks. Failure to follow this instruction may result in personal injury.
- After the fuel tank drain is complete always fit the sealing covers over the drain ports. Failure to do so will mean that fuel vapor can escape.
- This procedure involves fuel handling. Be prepared for fuel spillage at all times and always observe fuel handling precautions. Failure to follow these instructions may result in personal injury.

CAUTIONS:

- Always carry out the cleaning process before carrying out any repairs to the fuel injection system components. Failure to follow this instruction may result in foreign matter ingress to the fuel injection system.
- Make sure the workshop area in which the vehicle is being worked on is as clean and as dust free as possible. Foreign matter from work on clutches, brakes or from machining or welding operations can contaminate the fuel system and may result in later malfunction.

NOTE:

Removal steps in this procedure may contain installation details.

1. **WARNING:**

   For additional information, refer to: Petrol and Petrol-Ethanol Fuel Systems Health and Safety Precautions (100-00, Description and Operation).

2. Disconnect the battery ground cable.
   For additional information, refer to: Specifications (414-00, Specifications).

3. **WARNING:**

   Make sure to support the vehicle with axle stands.

   Raise and support the vehicle.

4. For additional information, refer to: Fuel System Pressure Release - 5.0L (310-00, General Procedures).

5. For additional information, refer to: Fuel Tank Draining (310-00, General Procedures).

6.

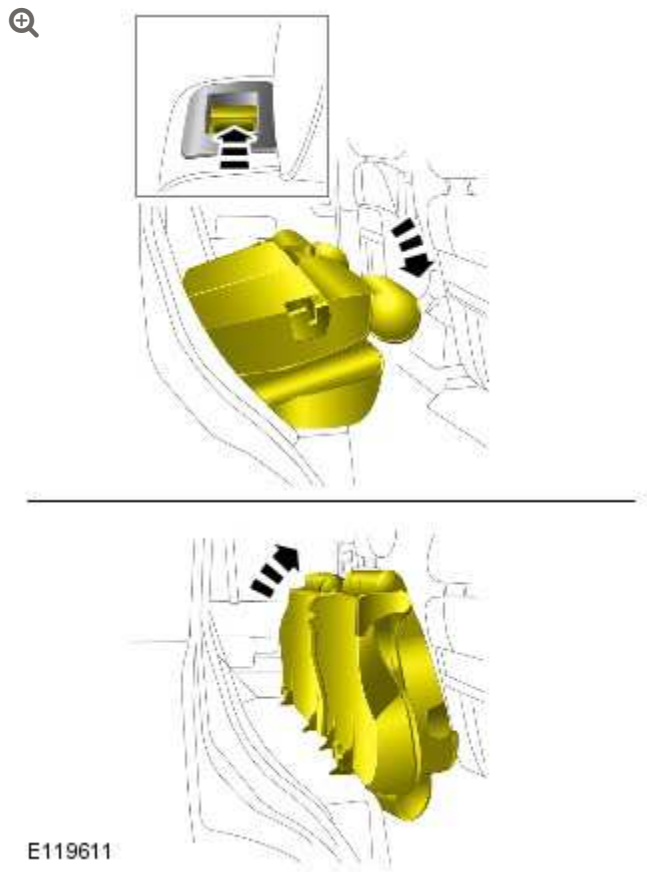

7.



Remove the 4 nuts and remove the fuel tank RH access cover.

- TORQUE: 10 Nm

8.

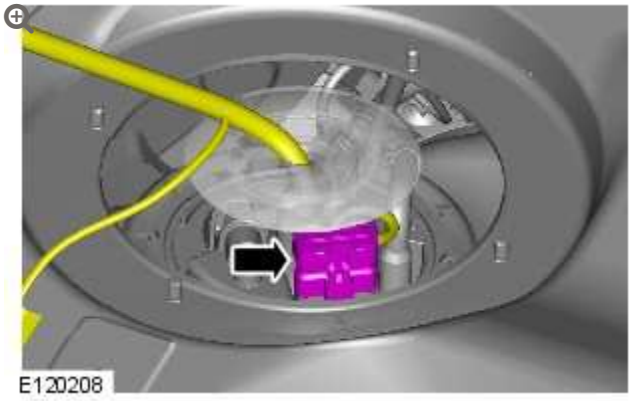

9. **CAUTION:**

Before disconnecting or removing components, ensure the area around the joint faces and connections are clean. Plug open connections to prevent contamination.

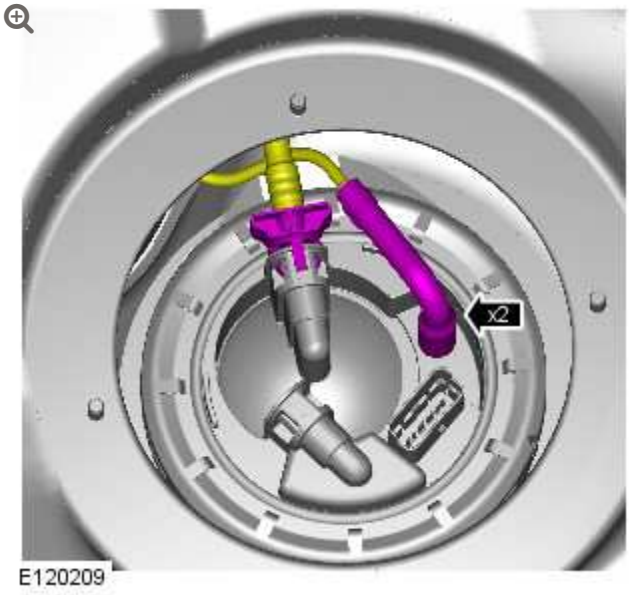

10. For additional information, refer to: Rear Subframe - 5.0L (502-00, Removal and Installation).

11.

CAUTION:

Before disconnecting or removing components, ensure the area around the joint faces and connections are clean. Plug open connections to prevent contamination.

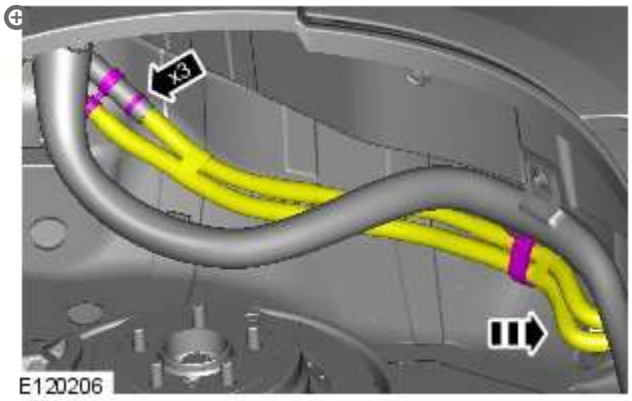

12.

NOTE:

Right-hand shown, left-hand similar.

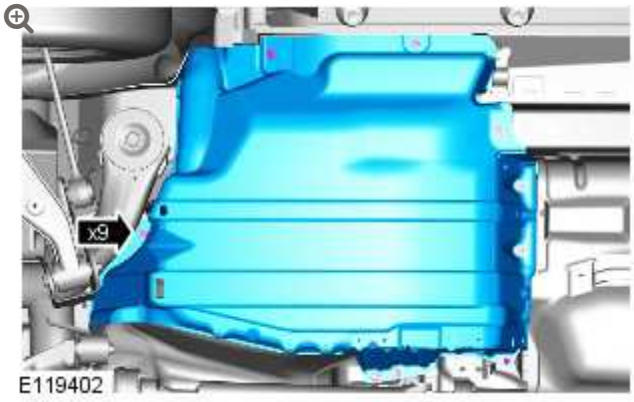

- TORQUE: 22 Nm

13.

CAUTION:

Before disconnecting or removing components, ensure the area around the joint faces and connections are clean. Plug open connections to prevent contamination.

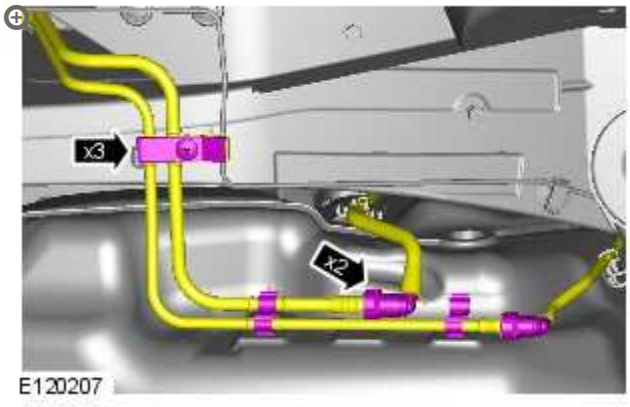

14.

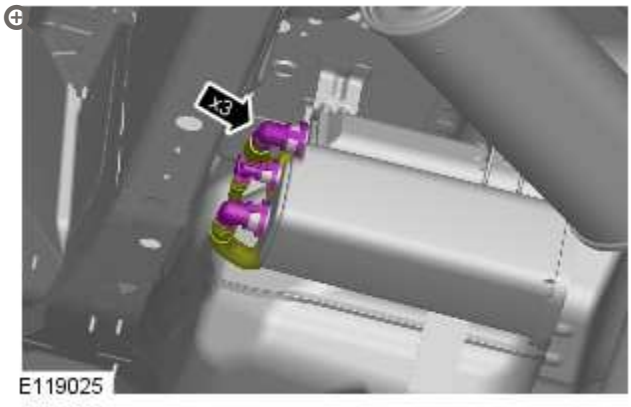

15.

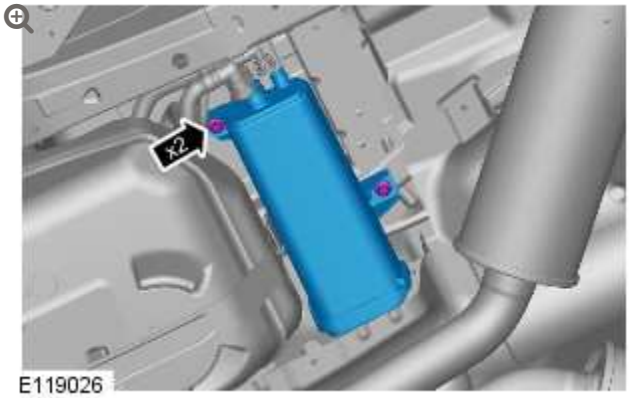

- TORQUE: 19 Nm

16.

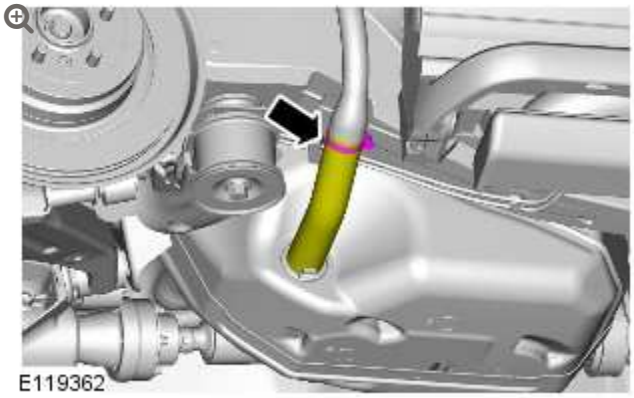

17.

CAUTION:

Position the breather hose and vent hose through the vehicle body during the fuel tank removal operation.

NOTE:

Do not disassemble further if the component is removed for access only.

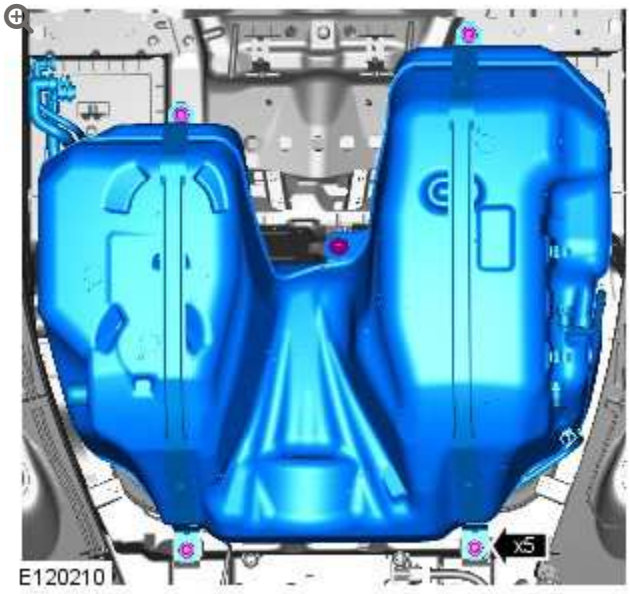

With assistance, remove the fuel tank.

- TORQUE: 19 Nm

18.

NOTE:

Some variation in the illustrations may occur, but the essential information is always correct.

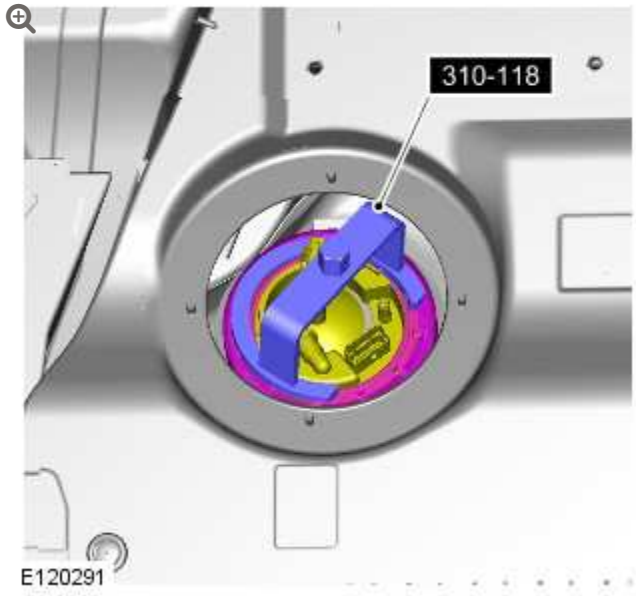

TORQUE: 35 Nm

19.

CAUTION:

Be prepared to collect escaping fuel.

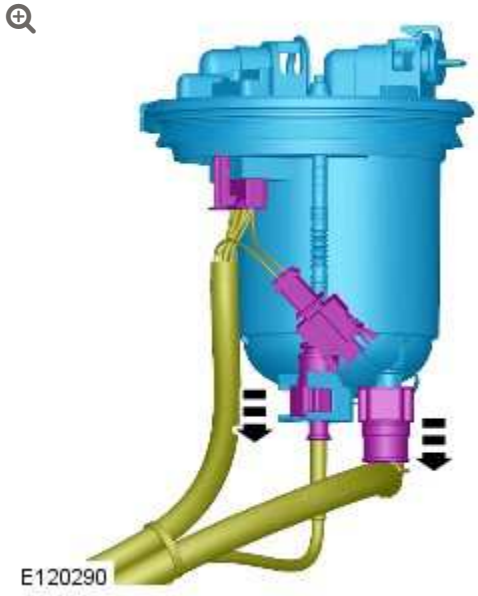

20.

NOTE:

Some variation in the illustrations may occur, but the essential information is always correct.

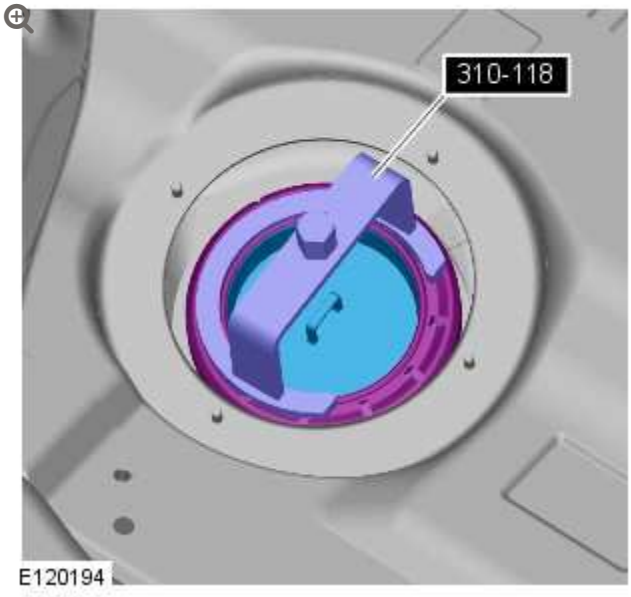

TORQUE: 35 Nm

21.

CAUTION:

Take extra care not to damage the fuel tank level sensor float and arm.

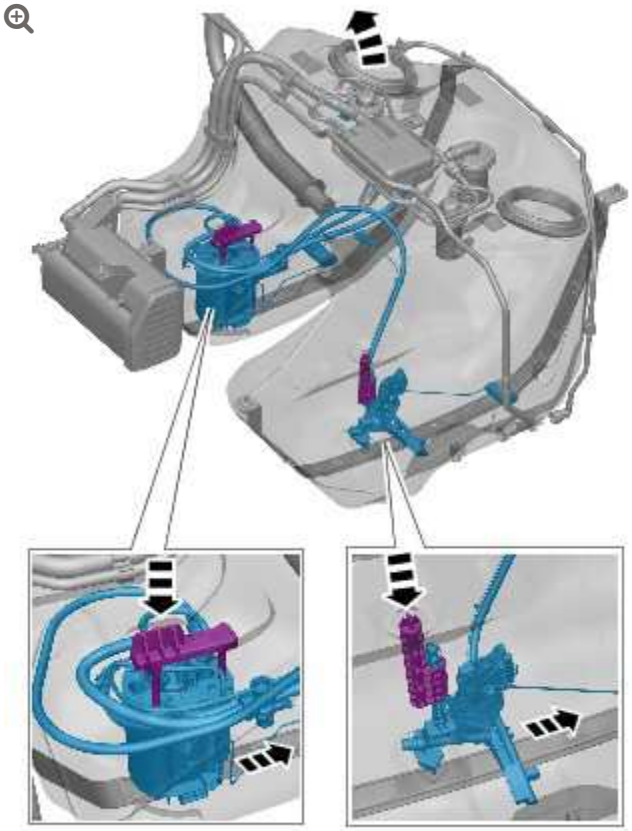

E120178

- Depress the clips and release the lower part of the pump and sender unit rearward.
- Withdraw from the fuel tank.

22.

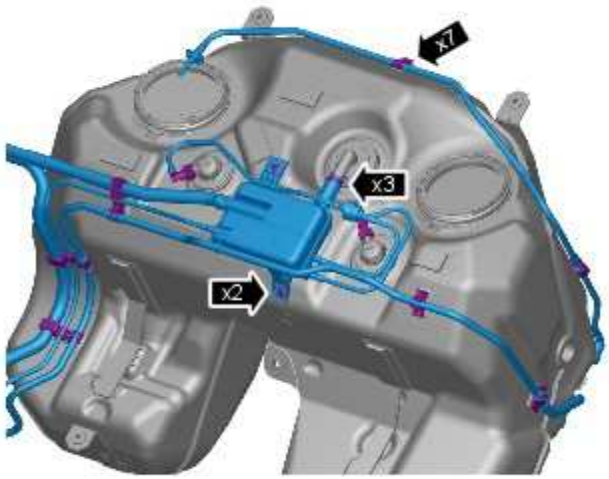

E120211

INSTALLATION

1. **CAUTION:**

   Position the breather hose and vent hose through the vehicle body during the fuel tank installation operation.

   To install, reverse the removal procedure.

FUEL TANK AND LINES – V8 5.0L PETROL/V8 S/C 5.0L PETROL

DIAGNOSIS AND TESTING

PRINCIPLE OF OPERATION

For a detailed description of the fuel tank and lines system and operation, refer to the relevant Description and Operation section of the workshop manual. REFER to: Fuel Tank and Lines (310-01 Fuel Tank and Lines - V8 5.0L Petrol/V8 S/C 5.0L Petrol, Description and Operation).

INSPECTION AND VERIFICATION

WARNINGS:

- Eye protection must be worn at all times when working on or near any fuel related components. Failure to follow this instruction may result in personal injury.
- This procedure involves fuel handling. Be prepared for fuel spillage at all times and always observe fuel handling precautions. Failure to follow this instruction may result in personal injury.
- After carrying out repairs, the fuel system must be checked visually for leaks. This should be done after the engine has been run, but with the engine switched **OFF**. Failure to follow this instruction may result in personal injury.
- If taken internally, **DO NOT** induce vomiting. Seek immediate medical attention. Failure to follow this instruction may result in personal injury.
- If fuel contacts the eyes, flush the eyes with cold water or eyewash solution and seek medical attention. Failure to follow this instruction may result in personal injury.
- Wash hands thoroughly after handling, as prolonged contact may cause irritation. Should irritation develop, seek medical attention. Failure to follow this instruction may result in personal injury.

CAUTIONS:

- Before disconnecting any part of the system, it is imperative that all dust, dirt and debris is removed from around components to prevent ingress of foreign matter into the fuel system. Failure to follow this instruction may result in damage to the vehicle.
- It is essential that absolute cleanliness is observed when working with these components. Always install blanking plugs to any open orifices or lines. Failure to follow this instruction may result in damage to the vehicle.
- Diagnosis by substitution from a donor vehicle is **NOT** acceptable. Substitution of control modules does not guarantee confirmation of a fault and may also cause additional faults in the vehicle being checked and/or the donor vehicle.

NOTES:

- Check and rectify basic faults before beginning diagnostic routines involving pinpoint tests.
- When measuring fuel sender resistance values with a multimeter, it is critical to use the correct multimeter setting. The multimeter should **not** be on the 'Auto' setting and **must** be set to 'Manual'. This will help prevent incorrect diagnosis and unnecessary replacement of fuel senders. If the multimeter range is set at 'Auto' then, during a sweep of the sender from 50 Ohms to 998 Ohms, the multimeter has to change its measurement range. For approximately 1 second, during the range switch over point, the multimeter display indicates an open circuit. This can lead to a mis-diagnosis of a fuel sender fault.

1. Verify the customer concern
2. Visually inspect for obvious signs of damage and system integrity

Visual Inspection

MECHANICAL	ELECTRICAL
▪ Low/contaminated fuel ▪ Fuel supply/return line(s) ▪ Fuel tank and filler pipe ▪ Fuel leak(s) ▪ Fuel filler cap ▪ Fuel filter ▪ Push connect fittings ▪ Fuel pump	▪ Fuses ▪ Links ▪ Relays ▪ Fuel Pump Driver Module (FPDM) ▪ Fuel pump module ▪ Sensor(s) ▪ Engine control module (ECM) ▪ Central Junction Box (CJB) ▪ Restraints Control Module (RCM)

MECHANICAL	ELECTRICAL

3. If an obvious cause for an observed or reported concern is found, correct the cause (if possible) before proceeding to the next step

4. If the cause is not visually evident, verify the symptom and refer to the Symptom Chart, alternatively check for Diagnostic Trouble Codes (DTCs) and refer to the DTC Index

SYMPTOM CHART

SYMPTOM	POSSIBLE CAUSES	ACTION
Engine cranks, but does not fire	▪ Engine breather system disconnected/restricted ▪ Ignition system ▪ Fuel system ▪ Electronic engine control	▪ Ensure the engine breather system is free from restriction and is correctly installed ▪ Check for ignition system, fuel system and electronic engine control DTCs and refer to the relevant DTC Index
Engine cranks and fires, but will not start	▪ Evaporative emissions purge valve ▪ Fuel pump ▪ Spark plugs ▪ HT short to ground (tracking) check rubber boots for cracks/damage ▪ Ignition system	▪ Check for evaporative emissions, fuel system and ignition system related DTCs and refer to the relevant DTC Index
Difficult cold start	▪ Engine coolant level/anti-freeze content ▪ Battery	▪ Check the engine coolant level and condition ▪ Ensure the battery is in a fully charged and serviceable condition

SYMPTOM	POSSIBLE CAUSES	ACTION
	▪ Electronic engine controls ▪ Fuel pump ▪ Purge valve	▪ Check for electronic engine controls, engine emissions, fuel system and evaporative emissions system related DTCs and refer to the relevant DTC Index
Difficult hot start	▪ Injector leak ▪ Electronic engine control ▪ Purge valve ▪ Fuel pump ▪ Ignition system	▪ Check for injector leak, install new injector as required ▪ Check for electronic engine controls, evaporative emissions, fuel system, ignition system and engine emission system related DTCs and refer to the relevant DTC Index
Difficult to start after hot soak (vehicle standing, engine off, after engine has reached operating temperature)	▪ Injector leak ▪ Electronic engine control ▪ Purge valve ▪ Fuel pump ▪ Ignition system	▪ Check for injector leak, install new injector as required ▪ Check for electronic engine controls, evaporative emissions, fuel system, ignition system and engine emission system related DTCs and refer to the relevant DTC Index
Engine stalls soon after start	▪ Breather system disconnected/restricted ▪ ECM relay ▪ Electronic engine control ▪ Ignition system ▪ Air intake system restricted ▪ Air leakage ▪ Fuel lines	▪ Ensure the engine breather system is free from restriction and is correctly installed ▪ Check for electronic engine control, ignition system and fuel system related DTCs and refer to the relevant DTC Index ▪ Check for blockage in air filter element and air intake system ▪ Check for air leakage in air intake system

SYMPTOM	POSSIBLE CAUSES	ACTION
Engine hesitates/poor acceleration	▪ Fuel pressure, fuel pump, fuel lines ▪ Injector leak ▪ Air leakage ▪ Electronic engine control ▪ Throttle motor ▪ Restricted accelerator pedal travel (carpet, etc) ▪ Ignition system ▪ Transmission malfunction	▪ Check for fuel system related DTCs and refer to the relevant DTC Index ▪ Check for injector leak, install new injector as required ▪ Check for air leakage in air intake system ▪ Ensure accelerator pedal is free from restriction ▪ Check for electronic engine controls, ignition, engine emission system and transmission related DTCs and refer to the relevant DTC Index
Engine backfires	▪ Fuel pump/lines ▪ Air leakage ▪ Electronic engine controls ▪ Ignition system ▪ Sticking variable camshaft timing (VCT) hub	▪ Check for fuel system failures ▪ Check for air leakage in intake air system ▪ Check for electronic engine controls, ignition system and VCT system related DTCs and refer to the relevant DTC Index
Engine surges	▪ Fuel pump/lines ▪ Electronic engine controls ▪ Throttle motor ▪ Ignition system	▪ Check for fuel system failures ▪ Check for electronic engine controls, throttle system and ignition system related DTCs and refer to the relevant DTC Index
Engine detonates/knocks	▪ Fuel pump/lines ▪ Air leakage ▪ Electronic engine controls ▪ Sticking VCT hub	▪ Check for fuel system failures ▪ Check for air leakage in intake air system ▪ Check for electronic engine controls and VCT system

SYMPTOM	POSSIBLE CAUSES	ACTION
		related DTCs and refer to the relevant DTC Index
No throttle response	▪ Electronic engine controls ▪ Throttle motor	▪ Check for electronic engine controls and throttle system related DTCs and refer to the relevant DTC Index
Poor throttle response	▪ Breather system disconnected/restricted ▪ Electronic engine controls ▪ Transmission malfunction ▪ Traction control event ▪ Air leakage	▪ Ensure the engine breather system is free from restriction and is correctly installed ▪ Check for electronic engine controls, transmission and traction control related DTCs and refer to the related DTC Index ▪ Check for air leakage in intake air system
Fuel gauge reading empty with fuel in the fuel tank	▪ Active fuel level sensor circuit open circuit ▪ Passive fuel level sensor circuit open circuit ▪ Instrument cluster internal failure	▪ Using the manufacturer approved diagnostic system, perform the guided diagnostic routine - Fuel Level Sensor Test
Fuel gauge not reading empty with no fuel in the fuel tank	▪ Jet pump fault ▪ Fuel crossover tube blocked or leaking	▪ Using the manufacturer approved diagnostic system, check datalogger signals - Fuel Level Sensor "pump/active/A" (0xD908) - Fuel Level Sensor "eject/passive/B" (0xD907). Refer to the table below. If the right sensor reads empty when the left sensor reads more than empty, check that the jet pump is transferring fuel from the left side to the right side

SYMPTOM	POSSIBLE CAUSES	ACTION
Fuel gauge reading is inaccurate	▪ Electric park brake control module longitudinal acceleration sensor fault may result in misleading inclination readings transmitted to the instrument cluster via the CAN network ▪ Active fuel level sensor circuit open circuit ▪ Passive fuel level sensor circuit open circuit ▪ Instrument cluster internal failure	▪ Using the manufacturer approved diagnostic system, check the electric park brake control module for longitudinal acceleration sensor related DTCs. If DTCs C0062-01, C0062-02 or C0062-54 are present, refer to the DTC index for the appropriate remedial actions. Clear DTCs and retest ▪ If fault persists, using the manufacturer approved diagnostic system, perform the guided diagnostic routine - Fuel Level Sensor Test

FUEL GAUGE, RESISTANCE, VOLTAGE AND FUEL TANK LEVEL COMPARISON CHART

Use the chart to determine fuel tank fuel volume versus fuel gauge reading to determine the fuel level symptom and fault.

NOTES:

- The vehicle must be parked on a level surface to obtain an accurate fuel level gauge reading.
- The actual values may vary, according to the quantity of fuel in the left and right sides of the fuel tank.

Volume, Resistance and Voltage Values

GAUGE READING	FILL VOLUME (L)	FUEL LEVEL SENSOR "PUMP/ACTIVE/A" (0XD908) - RIGHT SIDE		FUEL LEVEL SENSOR "EJECT/PASSIVE/B" (0XD907) - LEFT SIDE	
		RESISTANCE (Ω)	VOLTAGE (V)	RESISTANCE (Ω)	VOLTAGE (V)
	0	51.60	0.37	51.90	0.38
	1	51.60	0.37	51.90	0.38
	2	59.80	0.42	51.90	0.38
	3	75.90	0.52	51.90	0.38
	4	84.60	0.57	51.90	0.38
	5	102.10	0.69	51.90	0.38
Empty	6	111.20	0.73	51.90	0.38
	8	130.20	0.84	51.90	0.38
	10	150.60	0.94	51.90	0.38
	12	171.50	1.04	51.90	0.38
	14	193.90	1.15	51.90	0.38
	16	217.20	1.25	51.90	0.38
	18	241.40	1.36	51.90	0.38
	20	267.50	1.46	51.90	0.38
	22	295.50	1.56	51.90	0.38
	24	325.80	1.67	51.90	0.38
	26	357.10	1.77	51.90	0.38
	28	390.60	1.88	51.90	0.38
	30	407.60	1.93	51.90	0.38
	32	407.60	1.93	68.10	0.48
	34	407.60	1.93	84.70	0.57
	36	407.60	1.93	102.40	0.68
	38	407.60	1.93	121.10	0.78
	40	407.60	1.93	140.60	0.90

GAUGE READING	FILL VOLUME (L)	FUEL LEVEL SENSOR "PUMP/ACTIVE/A" (0XD908) - RIGHT SIDE		FUEL LEVEL SENSOR "EJECT/PASSIVE/B" (0XD907) - LEFT SIDE	
		RESISTANCE (Ω)	VOLTAGE (V)	RESISTANCE (Ω)	VOLTAGE (V)
	42	407.60	1.93	150.70	0.94
	44	407.60	1.93	161.60	1.01
	46	407.60	1.93	183.00	1.11
¼	48	407.60	1.93	194.40	1.16
	50	407.60	1.93	217.50	1.26
	52	407.60	1.93	230.20	1.31
	54	407.60	1.93	244.00	1.39
	56	407.60	1.93	268.50	1.47
½	58	407.60	1.93	282.00	1.52
	60	407.60	1.93	296.50	1.57
	62	407.60	1.93	311.70	1.63
	64	407.60	1.93	341.80	1.73
	66	407.60	1.93	357.50	1.78
	68	407.60	1.93	374.10	1.85
	70	426.30	1.99	391.10	1.89
	72	444.60	2.03	408.80	1.94
	74	464.40	2.09	427.40	2.00
	76	484.10	2.14	445.80	2.04
	78	505.40	2.19	465.30	2.10
	80	526.70	2.23	485.30	2.15
	82	550.10	2.29	506.60	2.20
	84	574.40	2.36	528.10	2.25
	86	600.40	2.41	551.10	2.30
¾	88	626.20	2.46	598.90	2.40

GAUGE READING	FILL VOLUME (L)	FUEL LEVEL SENSOR "PUMP/ACTIVE/A" (0XD908) - RIGHT SIDE		FUEL LEVEL SENSOR "EJECT/PASSIVE/B" (0XD907) - LEFT SIDE	
		RESISTANCE (Ω)	VOLTAGE (V)	RESISTANCE (Ω)	VOLTAGE (V)
	90	652.70	2.51	624.50	2.46
	92	679.20	2.56	651.70	2.51
	94	707.20	2.62	679.70	2.57
	96	770.50	2.72	738.70	2.67
Full	98	803.00	2.77	770.30	2.72
	100	836.40	2.82	836.60	2.82
	102	911.10	2.93	872.40	2.87
	104	950.90	2.97	950.60	2.97
	105	992.10	3.02	993.10	3.03

DTC INDEX

For a complete list of all Diagnostic Trouble Codes (DTCs) that could be logged on this vehicle, please refer to Section 100-00.
REFER to: Diagnostic Trouble Code (DTC) Index - V8 5.0L Petrol/V8 S/C 5.0L Petrol (100-00 General Information, Description and Operation).

2012.0 RANGE ROVER (LM), 310-01

FUEL TANK AND LINES – V8 5.0L PETROL/V8 S/C 5.0L PETROL

DESCRIPTION AND OPERATION

5.0L V8 FUEL TANK AND LINES COMPONENT LOCATION (ALL EXCEPT NAS)

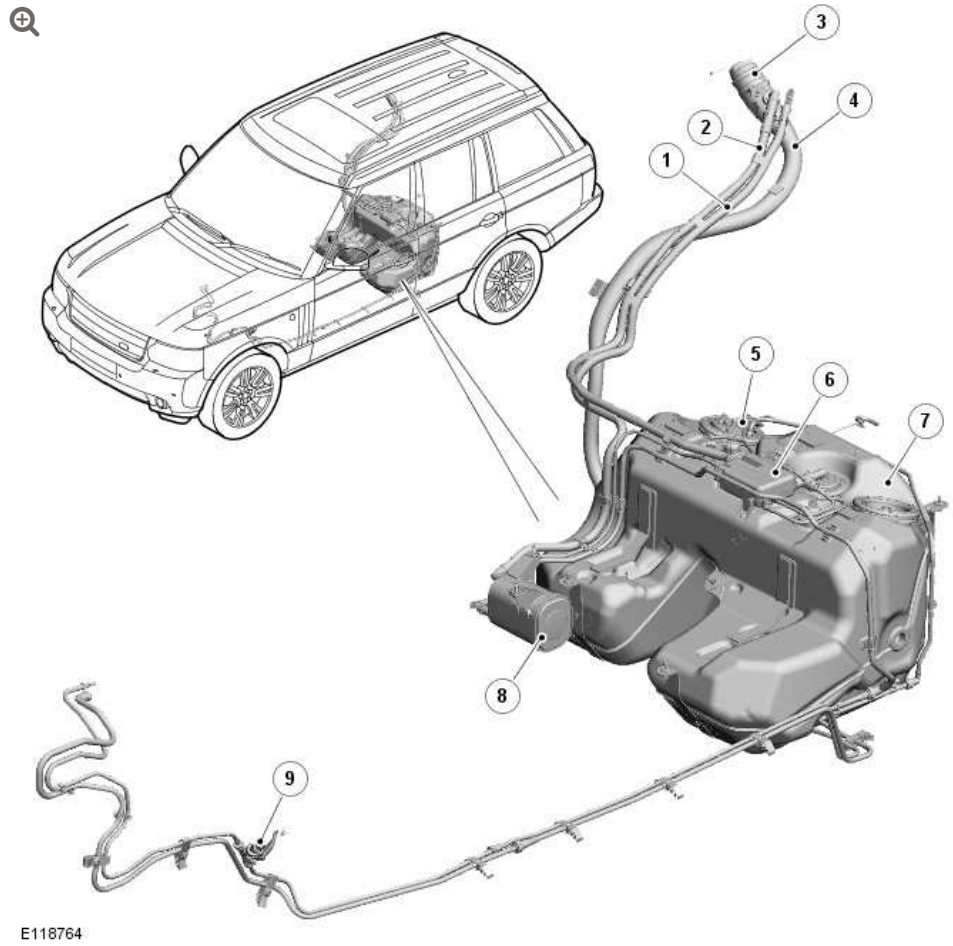

ITEM	DESCRIPTION
1	Charcoal canister breather pipe
2	Fuel tank breather pipe
3	Filler pipe cap
4	Filler pipe
5	Fuel delivery module
6	Vapor separator
7	Fuel tank
8	Charcoal canister
9	Fuel low pressure sensor

5.0L V8 FUEL TANK AND LINES COMPONENT LOCATION (NAS ONLY)

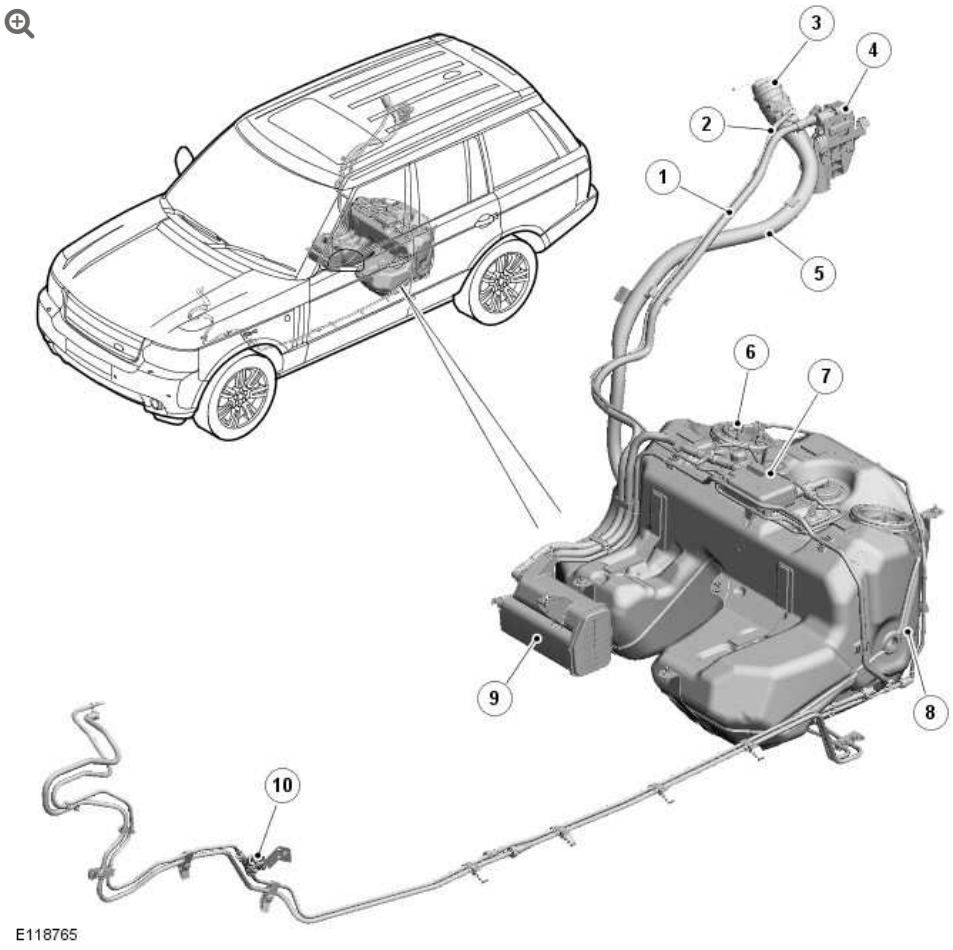

ITEM	DESCRIPTION
1	Charcoal canister breather pipe
2	Fuel tank breather pipe
3	Filler pipe cap
4	DMTL pump
5	Filer pipe
6	Fuel delivery module
7	Vapor separator
8	Fuel tank
9	Charcoal canister

ITEM	DESCRIPTION
10	Fuel low pressure sensor

GENERAL

The major components of the 5.0L V8 fuel system comprises a fuel tank, a fuel delivery module, a fuel filler assembly and two fuel level sensors.

The 5.0L V8 fuel system uses a returnless fuel system which comprises a fuel pump mounted in the fuel tank to deliver fuel at a constant flow and pressure to the fuel rails which supply fuel to all fuel injectors.

The fuel pump operation is regulated by a FPDM (fuel pump driver module) which is controlled by the engine management system. The driver module regulates the flow and pressure supplied by controlling the operation of the fuel pump using a PWM (pulse width modulation) output.

The fuel rails and the injectors are described in Fuel Charging and Controls – 5.0L V8.
For additional information, refer to: Fuel Charging and Controls (303-04A Fuel Charging and Controls - V8 5.0L Petrol, Description and Operation) /
Fuel Charging and Controls (303-04B Fuel Charging and Controls - V8 S/C 5.0L Petrol, Description and Operation).
Fuel system emission control is described in Engine Emission Control - 5.0L V8
For additional information, refer to: Electronic Engine Controls (303-14A Electronic Engine Controls - V8 5.0L Petrol, Description and Operation) /
Electronic Engine Controls (303-14B Electronic Engine Controls - V8 S/C 5.0L Petrol, Description and Operation).

FUEL SYSTEM SCHEMATIC DIAGRAM

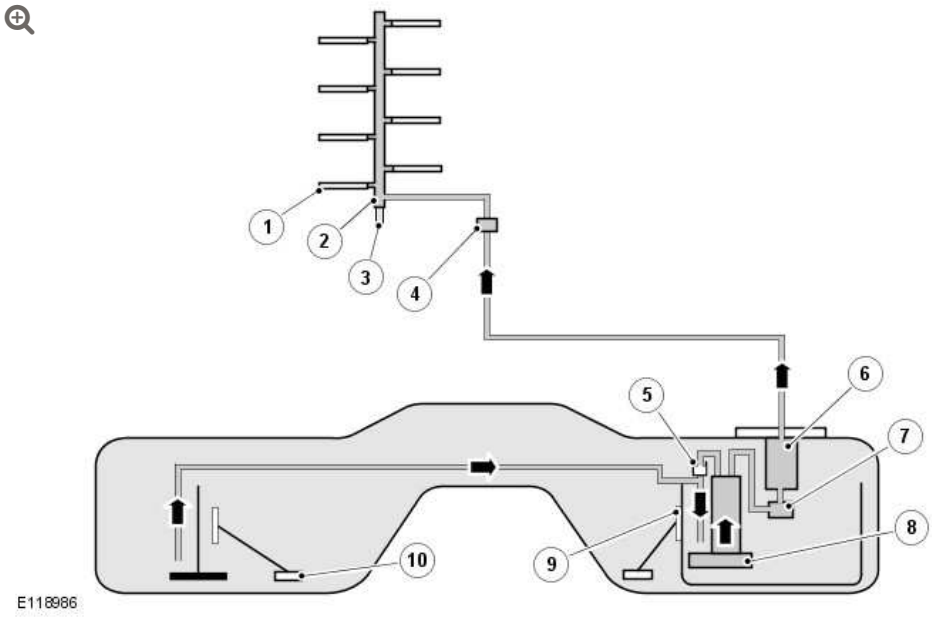

ITEM	DESCRIPTION
1	Fuel injector (8 off)
2	Fuel rail
3	Fuel High Pressure (HP) sensor
4	Fuel LP sensor
5	Jet pump
6	Fuel filter
7	Pressure relief valve
8	Fuel pump module assembly
9	Right Hand (RH) fuel level sensor
10	Left Hand (LH) fuel level sensor

FUEL TANK

The fuel tank is constructed from moulded plastic and is mounted under the rear seat floor pan, forward of the rear suspension. The

fuel tank has a capacity of 104.5 liters (27.6 US gallons). The tank is a saddle tank design with a fuel delivery module located inside the tank to collect the fuel from each side of the tank.

A vapor separator is attached to the top of the tank. The vapor separator collects liquid fuel and returns it back to the fuel tank via the LH (left-hand) roll over valve.

The fuel tank is the same tank introduced for 2006MY vehicles but with revised fuel delivery modules for 2010MY 5.0L V8 vehicles.

FUEL DELIVERY MODULE

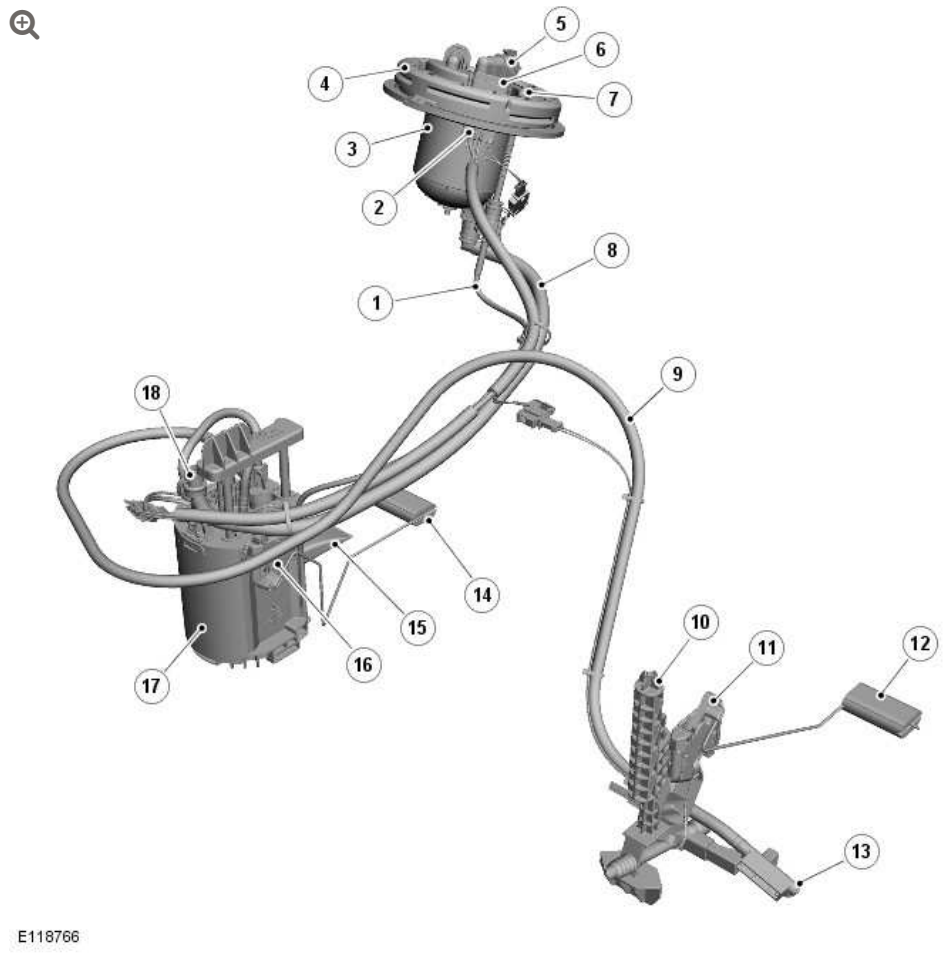

ITEM	DESCRIPTION
1	Fuel outlet pipe to FFBH pump connection
2	Electrical connector

ITEM	DESCRIPTION
3	Fuel filter
4	Top flange assembly
5	Pressure outlet to fuel rail
6	Harness connector
7	Outlet for FFBH pump (if fitted)
8	Pressure feed pipe to filter
9	Suction pipe
10	Remote level sensor and fuel pick-up
11	LH fuel level sensor
12	Level sensor float
13	Fuel pick-up
14	Level sensor float
15	Fuel inlet filter
16	RH (right-hand) fuel level sensor
17	Fuel pump
18	Pressure relief valve

The fuel delivery module is a new design for 5.0L V8 2010MY vehicles. The module is located inside the fuel tank and comprises three main components; a fuel pump, a remote fuel pick-up and a top flange assembly.

FUEL PUMP

The fuel pump is a variable-speed rotary-vane type, which operates in a fuel pump module located in the RH side of the fuel tank. A venturi transfer pump is located in the RH side of the tank. The fuel pump module is secured in the fuel tank with a bayonet style locking ring that is welded into the tank structure. The fuel pump module has

an integral top plate for the external pipe work and electrical connectors.

The fuel pump delivers fuel at a maximum pressure of 630 kPa (6.3 bar; 91.4 lbf/in.^{2}) to the filter bowl in the top flange.

The pump has a spring loaded top plate which secures the pump by compression in its location in the front RH side of the fuel tank. The electric pump is located in a plastic swirl pot which collects fuel from the base of the fuel tank via a filter.

The fuel level sensor the right hand side of the tank is attached to the outside of the swirl pot.

The fuel pump is a serviceable component and access to the pump is by removal of the top flange.

REMOTE FUEL PICK-UP AND LEVEL SENSOR ASSEMBLY

The remote fuel pick-up is located in the front LH side of the fuel tank. The fuel pick-up has a spring loaded frame which secures the assembly by compression in the fuel tank.

The fuel system incorporates two jet pumps. One jet pump is integrated into the fuel pump and draws fuel from the RH side of the fuel tank. The other jet pump is located on the fuel delivery module on the RH side of the tank. There is a pipe that is located in the LH side of the tank that allows fuel to be drawn over from the LH side of the tank, delivering fuel into the swirl pot. The jet pumps operate on a venturi effect created by the fuel at pump output pressure passing through the jet pump. This draws additional fuel from the LH side of the tank through ports in the jet pump body, delivering additional fuel to the swirl pot.

The fuel level sensor for the LH side of the fuel tank is attached to the fuel pick-up frame. The fuel pick-up and the level sensor are

serviceable components and access is by removal of the flange cover on the top LH side of the fuel tank.

TOP FLANGE ASSEMBLY

The top flange is located on the top RH side of the fuel tank. The flange assembly is sealed in the tank with a with a sealing ring. A locking ring secures the flange assembly in the tank and requires a special tool for removal.

The outer surface of the flange has two outlets with quick-fit connections. One connection is the pressure outlet to the fuel rail, the second outlet is the fuel supply to the Fuel Fired Booster Heater (FFBH) pump, if fitted.
For additional information, refer to: Auxiliary Climate Control (412-02C Auxiliary Climate Control, Description and Operation).
An electrical connector is located adjacent to the pipe connections and provides the electrical interface to the fuel pump and the level sensors.

On the underside of the flange, inside the tank, is a moulded housing which contains the non-serviceable fuel filter. Fuel from the fuel pump enters the base of the housing and passes through the filter before exiting the tank to the fuel rail or the FFBH pump, if fitted. An electrical connection on the base of the filter housing provides a ground for the filter.

FUEL PUMP DRIVER MODULE (FPDM)

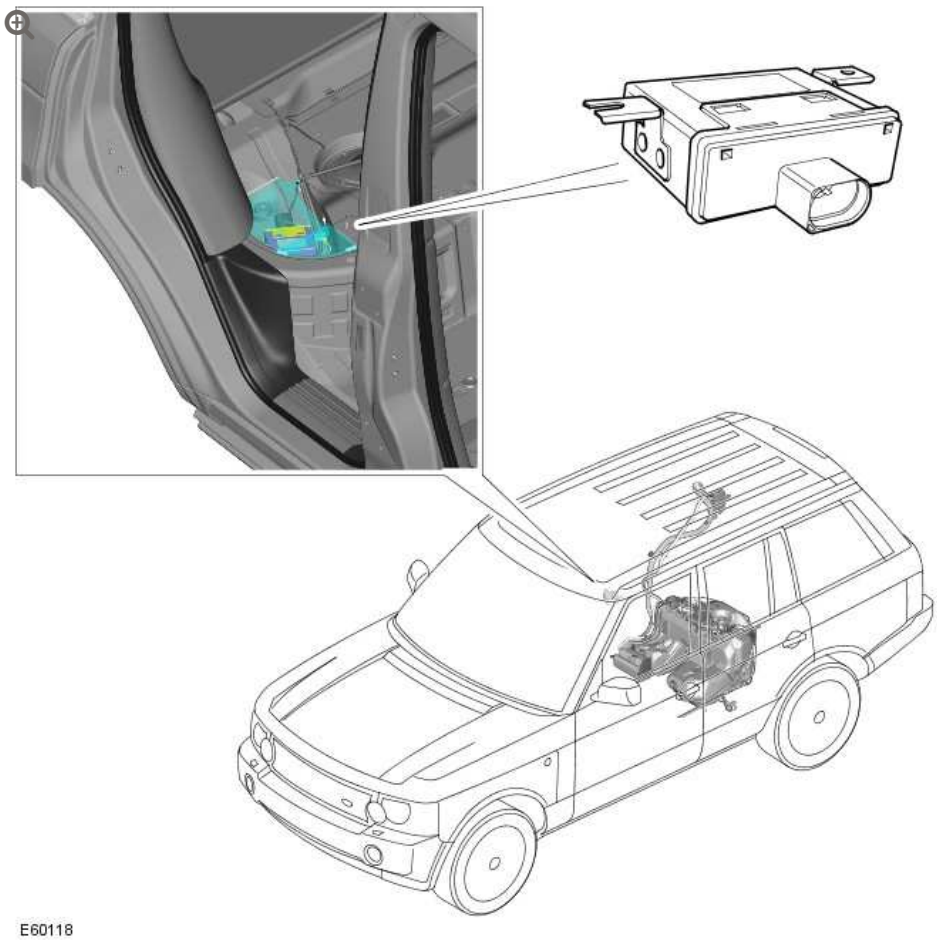

The FPDM is attached to and located under a cover which is located below the RH side of the rear seat cushion.

The fuel pump operation is regulated by the FPDM which is controlled by the ECM (engine control module). The FPDM regulates the flow and pressure supplied by controlling the operation of the fuel pump using a PWM output.

The FPDM is powered by a supply from the fuel pump relay in the EJB (engine junction box). The fuel pump relay is energized on opening the driver's door or when power mode 9 engine crank is initiate using the stop/start button. The FPDM supplies power to the fuel pump, and adjusts the power to control the speed of the fuel pump and thus the pressure and flow in the fuel delivery line.

A PWM signal from the ECM tells the FPDM the required speed for the fuel pump. The on time of the PWM signal represents half the fuel pump speed, e.g. if the PWM signal has an on time of 50%, the FPDM drives the pump at 100%.

The FPDM will only energize the fuel pump if it receives a valid PWM signal, with an on time of between 4% and 50%. To switch the fuel pump off, the ECM transmits a PWM signal with an on time of 75%.

The output pressure from the fuel pump will change with changes of engine demand and fuel temperature. The ECM monitors the input from the fuel rail LP sensor and adjusts the speed of the fuel pump as necessary to maintain a nominal output pressure of 450 kPa (4.5 bar; 65.3 lbf/in.^{2}), except during engine start-up. At engine start-up the target pressure for the fuel delivery line is 630 kPa (6.3 bar; 91.4 lbf/in.^{2}).

If the SRS (supplemental restraint system) outputs a crash signal on the high speed CAN (controller area network) bus, the ECM de-energizes the fuel pump relay to prevent any further fuel being pumped to the engine.

If the ECM does not detect pressure in the fuel delivery line, it stops, or refuses to start the engine and stores the appropriate DTC (diagnostic trouble code).

The ECM receives a monitoring signal from the FPDM. Any DTC's produced by the FPDM are stored by the ECM.

DTC's can be retrieved from the ECM using an approved Land Rover diagnostic system. The FPDM itself cannot be interrogated by the approved Land Rover diagnostic system.

FUEL LEVEL SENSORS

Two fuel level sensors are used in the fuel tank to measure the amount of remaining fuel in the LH and RH sides of the fuel tank. The LH level sensor is attached to the frame of the fuel pick-up and the RH level sensor is attached to the fuel pump swirl pot. The sensors are connected to the vehicle wiring harness via a connector on the outer face of the top flange assembly.

The sensors are a MAgnetic Passive Position Sensor (MAPPS) which provides a variable resistance to ground for the output from the fuel gauge. The sensor is sealed from the fuel preventing contamination of the contacts and increasing reliability. The front and rear fuel level sensors are connected to the external electrical connector on the flange via the connectors on the underside of the fuel pump module flange.

The sensor comprises a series of 51 film resistors mounted in an arc on a ceramic surface. The resistors are wired in series with individual contacts. A soft magnetic foil with 51 flexible contacts is mounted a small distance above the film resistors. A magnet, located below the ceramic surface, is attached to the sender unit float arm. As the float arm moves, the magnet follows the same arc as the film resistors. The magnet pulls the flexible contacts onto the opposite film resistor contacts forming an electrical circuit.

SENSOR OPERATING PRINCIPLE

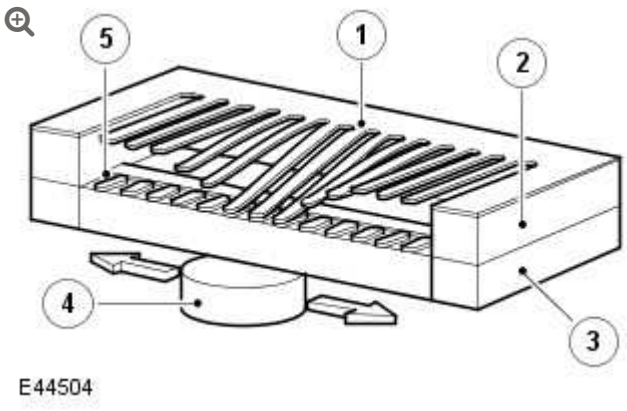

ITEM	DESCRIPTION

ITEM	DESCRIPTION
1	Magnetic foil
2	Spacer
3	Ceramic surface
4	Magnet
5	Resistance film

The film resistors are arranged in a linear arc with resistance ranging from 51.2 to 992.11 Ohms. The electrical output signal output is proportional to the amount of fuel in each side of the tank and the position of the float arms. The measured resistance is processed by the instrument cluster to implement an anti-slosh function. This monitors the signal and updates the fuel gauge pointer position at regular intervals, preventing constant pointer movement caused by fuel movement in the tank due to cornering or braking.

A warning indicator is incorporated in the instrument cluster and illuminates when the fuel level is at or below 10 liters (2.64 US gallons).

The fuel level sender signals are converted into a CAN bus message by the instrument cluster as a direct interpretation of the fuel tank contents in liters. The ECM uses the CAN bus message to store additional OBD (on-board diagnostic) P Codes for misfire detection when the fuel level is below a predetermined capacity.

Left Hand Fuel Level Sensor Resistance/Fuel Gauge Read out Table

NOTE:

These figures are with the vehicle on level ground. Sensor readings will differ with varying vehicle inclinations.

SENDER UNIT RESISTANCE, OHMS	NOMINAL GAUGE READING
51	Empty
84	Low fuel level illumination (12.5L)
375	Half full
911	Full

Right Hand Fuel Level Sensor Resistance/Fuel Gauge Read out Table

NOTE:

These figures are with the vehicle on level ground. Sensor readings will differ with varying vehicle inclinations.

SENDER UNIT RESISTANCE, OHMS	NOMINAL GAUGE READING
86	Empty
160	Low fuel level illumination (12.5L)
441	Half full
944	Full

FUEL FILLER PIPE AND TANK BREATHER ASSEMBLY

Fuel Filler Pipe Assembly (All Except NAS)

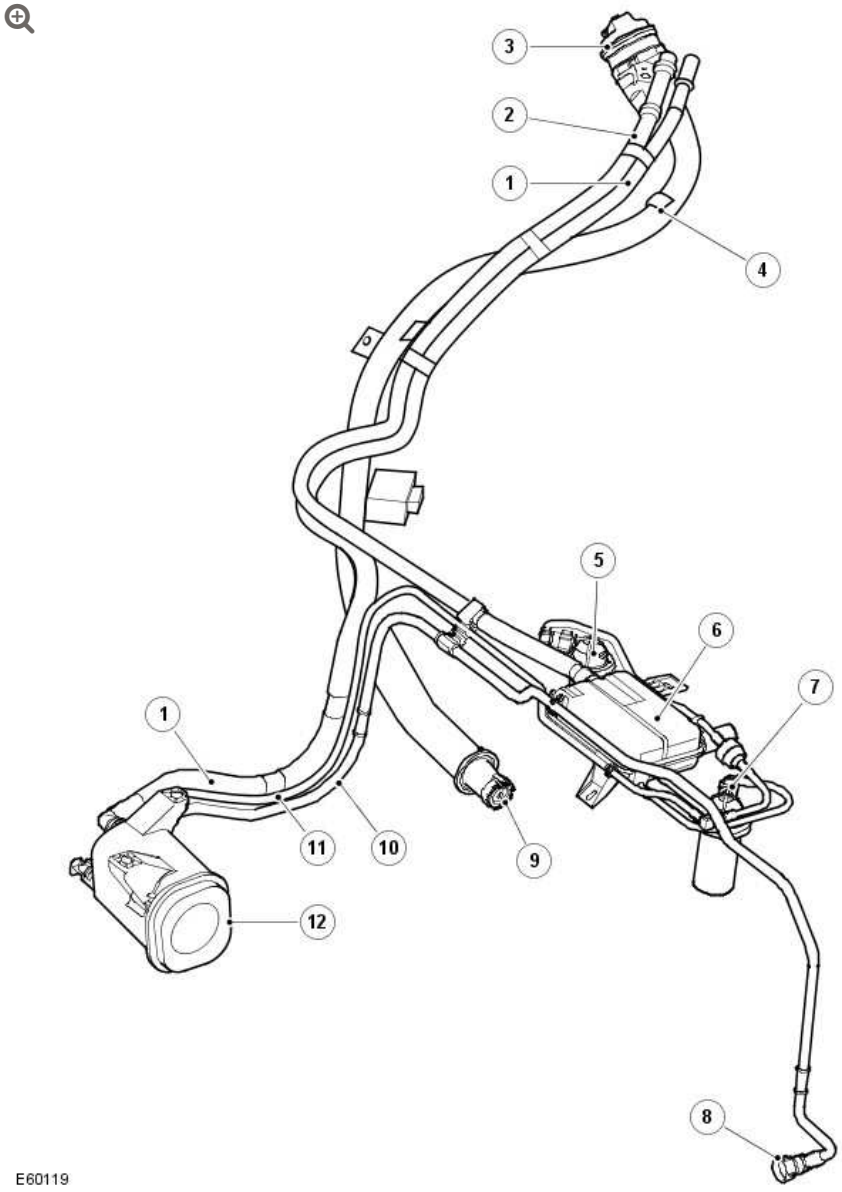

ITEM	DESCRIPTION
1	Charcoal canister breather pipe
2	Fuel tank breather pipe
3	Filler head cap
4	Filler pipe
5	Roll over valve
6	Vapor separator
7	Roll over valve
8	Connection pipe to purge valve

ITEM	DESCRIPTION
9	Filler pipe tank connection and spitback flap
10	Purge pipe
11	Fuel tank vapor vent pipe
12	Charcoal canister

Fuel Filler Pipe Assembly (NAS Only)

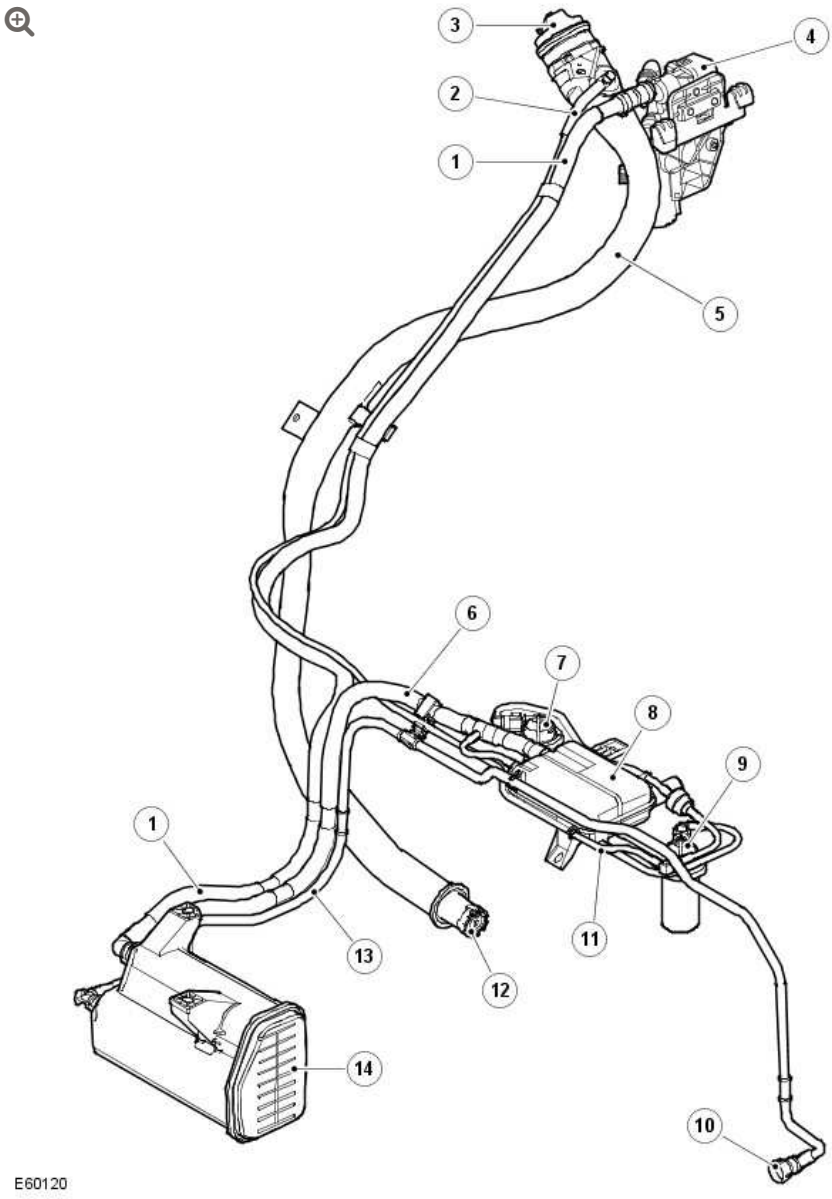

ITEM	DESCRIPTION
1	Charcoal canister breather pipe to DMTL pump

ITEM	DESCRIPTION
2	Fuel tank breather pipe
3	Filler head cap
4	DMTL pump
5	Filler pipe
6	Fuel tank vapor vent pipe
7	Roll over valve
8	Vapor separator
9	Roll over valve
10	Connection pipe to purge valve
11	Fuel tank vapor vent pipe
12	Filler pipe tank connection
13	Purge pipe
14	Charcoal canister

The fuel filler head is positioned at the rear of the vehicle, above the right hand rear wheel. The filler head and cap is covered by a moulded plastic cover which is electrically locked when the vehicle is locked.

The filler cap is a conventional screw in type which is secured to the vehicle with a lanyard. The filler cap must be securely fitted to ensure that the tank venting system is sealed. The cap has a locking mechanism which gives an audible click when the cap is correctly tightened.

Failure to correctly secure the filler cap will result in vapor being lost from the system. On NAS Vehicles, if the cap is incorrectly secured when the engine management system operates the Diagnostic Monitoring Tank Leakage (DMTL) system, the loss of vapor will be detected as a leak and the MIL lamp will be illuminated.

The filler head is a stainless steel fabrication. A bracket provides for the attachment of the filler head to the vehicle body.

A connection on the rear of the filler head allows for the connection of the fuel tank breather pipe from the vapor separator on ROW vehicles and from the roll over valves on NAS vehicles.

The fuel filler pipe locates in the tank and incorporates a spitback flap in the tank end of the pipe. The flap is a spring loaded cover which acts as a 1-way valve, allowing the tank to be filled but preventing fuel leaving the tank into the filler pipe.

All vehicles have a charcoal canister breather pipe which is connected from the charcoal canister and is routed alongside the fuel filler pipe to the filler head. The filler head end of this pipe is connected differently depending on market as follows:

- On ROW vehicles the breather pipe is fitted with a mesh and allows fresh air to be drawn into the charcoal canister when fuel vapor is being purged from the system.
- On NAS vehicles the breather pipe is connected to the DMTL pump. Fresh air is drawn into the pipe via a DMTL filter integral with the pump when fuel vapor is being purged from the system. When the DMTL system is active, the breather pipe is closed by the pump, sealing the system and allowing the system to be pressure checked for leakage.

For information on the charcoal canister and purging system refer to the evaporative emissions section.
For additional information, refer to: Engine Emission Control (303-08A Engine Emission Control - V8 5.0L Petrol, Description and Operation).

A second pipe is routed alongside the charcoal canister breather pipe. On ROW vehicles, this pipe is the fuel tank breather pipe from the vapor separator and is connected into the fuel filler pipe near to

the filler head. On NAS vehicles, this pipe is smaller in diameter and also serves as the fuel tank breather pipe. The pipe is not connected to the vapor separator but allows fuel vapor from the right hand roll over valve to vent into the connection with the fuel filler pipe near to the filler head.

A pipe is routed across the top of the tank in front of the vapor separator. This pipe connects the charcoal canister to the purge valve located in the engine compartment.

FUEL LOW PRESSURE (LP) SENSOR



The fuel LP sensor supplies a pressure signal to the ECM to enable closed loop control of the fuel pump. The fuel LP sensor is installed in a manifold in the fuel delivery line. The manifold is located in the rear of the front LH wheelarch, behind the splash shield.

FUEL TANK FILLER PIPE

(G1224130)

REMOVAL AND INSTALLATION

19.55.07	FILLER PIPE - FUEL TANK - RENEW	5000 CC, AJ V8	2.1	USED WITHINS	+

REMOVAL

WARNINGS:

- After carrying out repairs, the fuel system must be checked visually for leaks. Failure to follow this instruction may result in personal injury.
- After the fuel tank drain is complete always fit the sealing covers over the drain ports. Failure to do so will mean that fuel vapor can escape.
- This procedure involves fuel handling. Be prepared for fuel spillage at all times and always observe fuel handling precautions. Failure to follow these instructions may result in personal injury.
- Wash hands thoroughly after fuel handling, as prolonged contact may cause irritation. Should irritation develop, seek medical attention.

CAUTIONS:

- Always carry out the cleaning process before carrying out any repairs to the fuel injection system components. Failure to follow this instruction may result in foreign matter ingress to the fuel injection system.
- Make sure the workshop area in which the vehicle is being worked on is as clean and as dust free as possible. Foreign matter from work on clutches, brakes or from machining or welding operations can contaminate the fuel system and may result in later malfunction.

NOTE:

Removal steps in this procedure may contain installation details.

1. Disconnect the battery ground cable.
   For additional information, refer to: Specifications (414-00, Specifications).

2. **WARNING:**

   Make sure to support the vehicle with axle stands.

   Raise and support the vehicle.

3. For additional information, refer to: Fuel Tank Draining (310-00, General Procedures).

4. For additional information, refer to: Exhaust System (309-00, Removal and Installation).

5. For additional information, refer to: Rear Fender Splash Shield (501-08, Removal and Installation).

6.

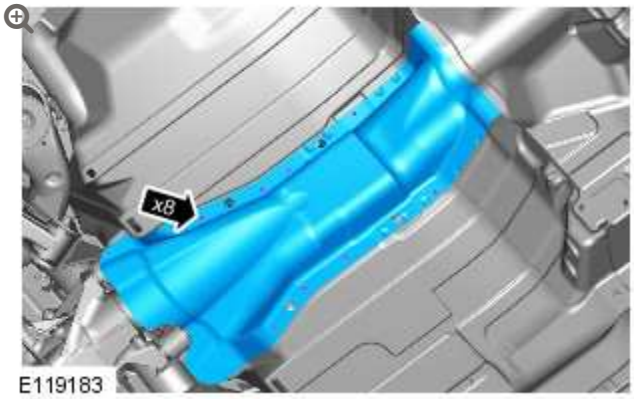

TORQUE: 5 Nm

7.

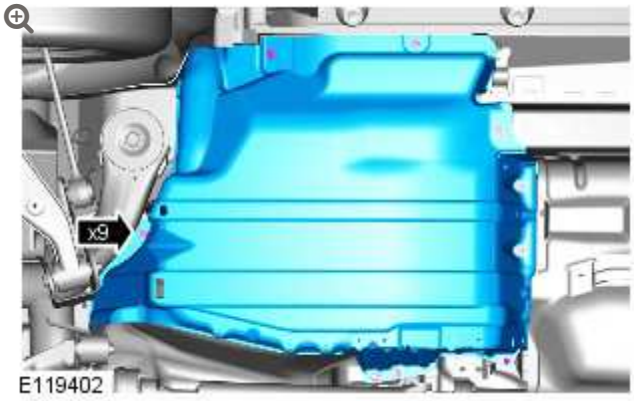

TORQUE: 25 Nm

- Remove the 7 bolts.
- Remove the 2 nuts.

8.

CAUTION:

Before disconnecting or removing the components, make sure the area around the joint faces and connections are clean. Plug open connections to prevent contamination.

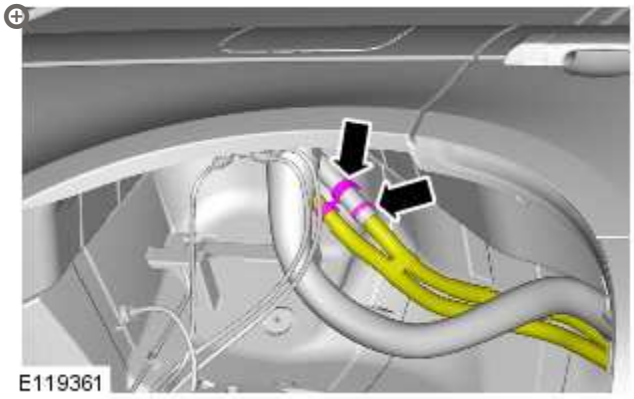

- Remove and discard the hose clip.
- Install a new clip.
- Install blanking caps to the exposed ports.

9. Position a container to collect the fuel spillage.

10. 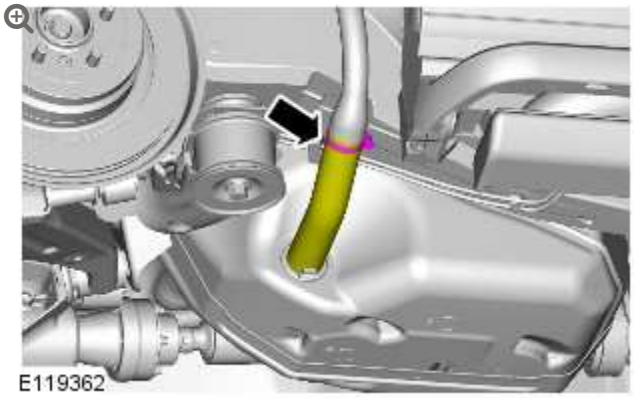

11. Remove the container.
    - Dispose of the collected fuel in accordance with local regulations.
    - Clean any fuel residue remaining in the container.

12.



13.

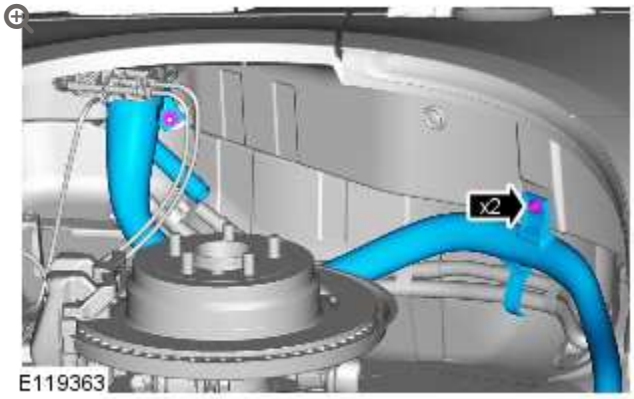

TORQUE M6: 9 Nm TORQUE M5: 4 Nm

INSTALLATION

1. To install reverse the removal procedure.

FUEL TANK AND LINES - V8 5.0L PETROL/V8 S/C 5.0L PETROL

FUEL PUMP MODULE (G1224129)

REMOVAL AND INSTALLATION

19.45.03	PUMP - INTEGRAL - FUEL TANK - REAR - RENEW	5000 CC, AJ V8	1.3	USED WITHINS	+

SPECIAL TOOL(S)



310-118 (LRT-19-009)

Wrench, Fuel Tank Module

REMOVAL

NOTE:

Removal steps in this procedure may contain installation details.

1. Disconnect the battery ground cable.
   For additional information, refer to: Specifications (414-00, Specifications).

2. For additional information, refer to: Fuel System Pressure Release - 5.0L (310-00, General Procedures).

3. For additional information, refer to: Fuel Tank Draining (310-00, General Procedures).

4. For additional information, refer to: Fuel Filter (310-01, Removal and Installation).

5. 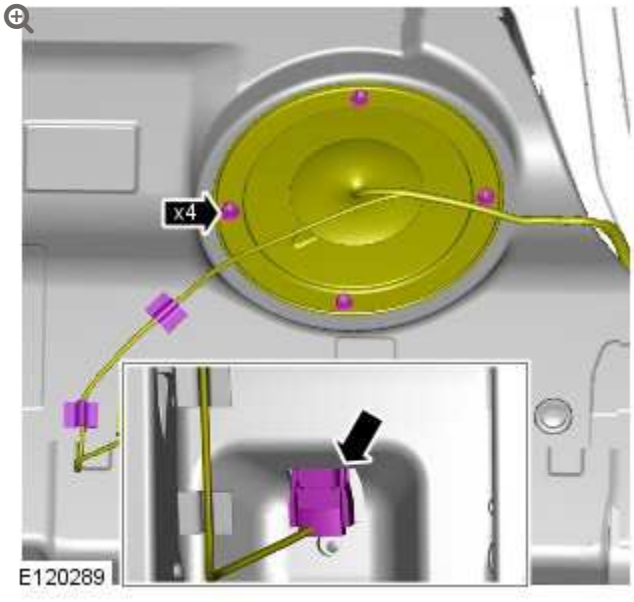

   TORQUE: 10 Nm

6.

CAUTION:

Before disconnecting or removing components, ensure the area around the joint faces and connections are clean. Plug open connections to prevent contamination.

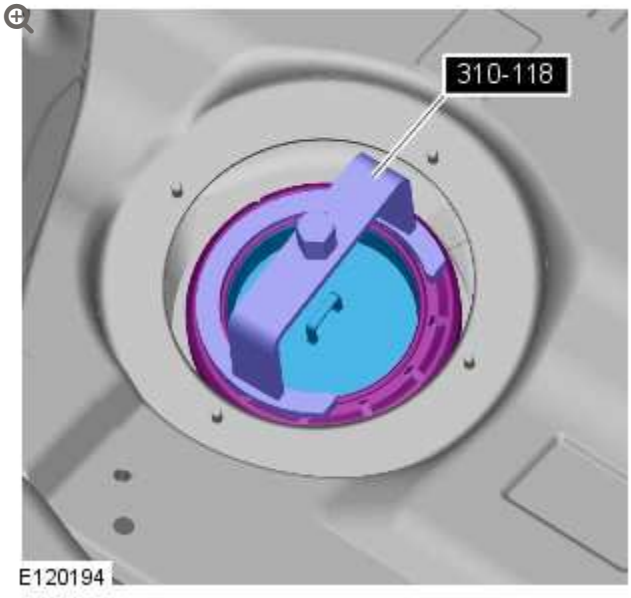

TORQUE: 35 Nm

- Using the special tool, remove the fuel sender cover locking ring.

7.

CAUTION:

Take extra care not to damage the fuel tank level sensor float and arm.

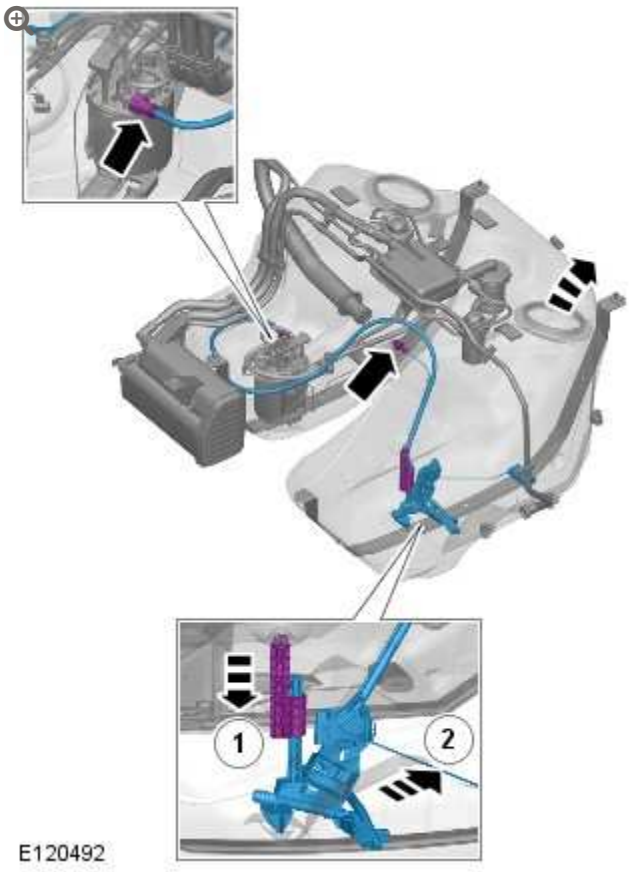

- Depress the clips and release the lower part of the pump and sender unit rearward.
- Withdraw from the fuel tank.

8. **CAUTION:**

Take extra care not to damage the fuel tank level sensor float and arm.

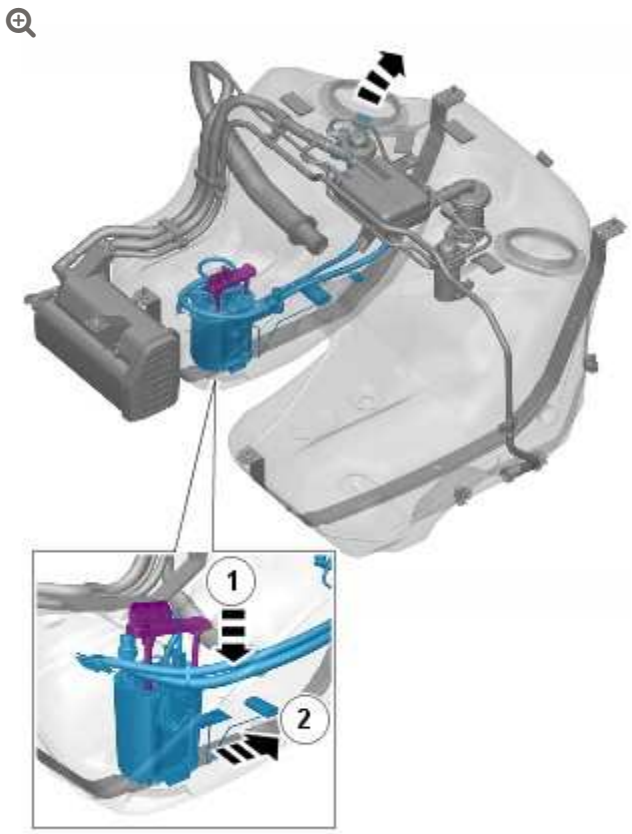

E120494

INSTALLATION

1. To install, reverse the removal procedure.

2. **CAUTIONS:**

   - Make sure the fuel pump and sender unit is correctly installed in to the retaining bracket in the fuel tank.
   - Take extra care not to damage the fuel tank level sensor float and arm.
   - Install a new seal.

NOTE:

Make sure the locating tang is installed in the correct position.

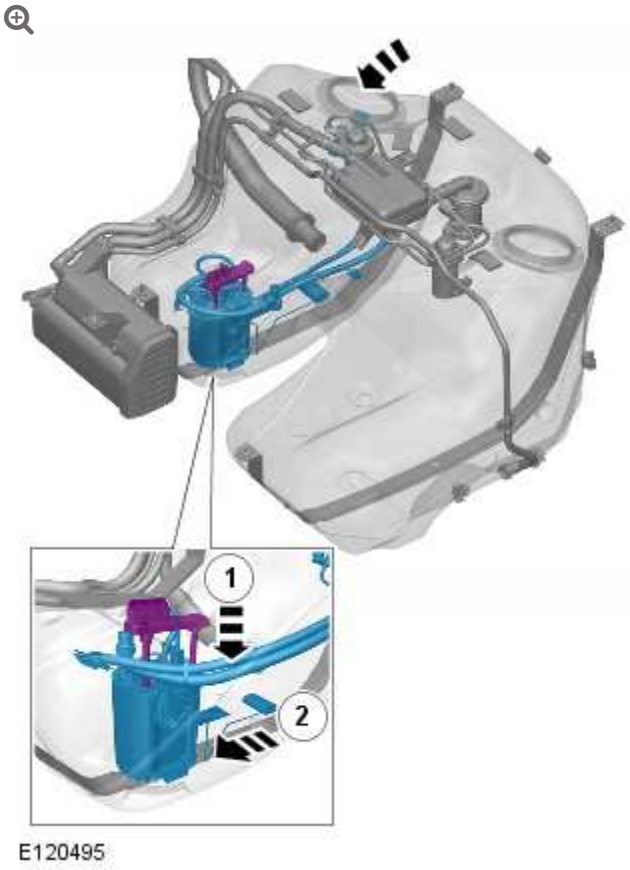

E120495

3.

CAUTIONS:

- Make sure the fuel pump and sender unit is correctly installed in to the retaining bracket in the fuel tank.
- Take extra care not to damage the fuel tank level sensor float and arm.
- Install a new seal.

NOTE:

Make sure the locating tang is installed in the correct position.

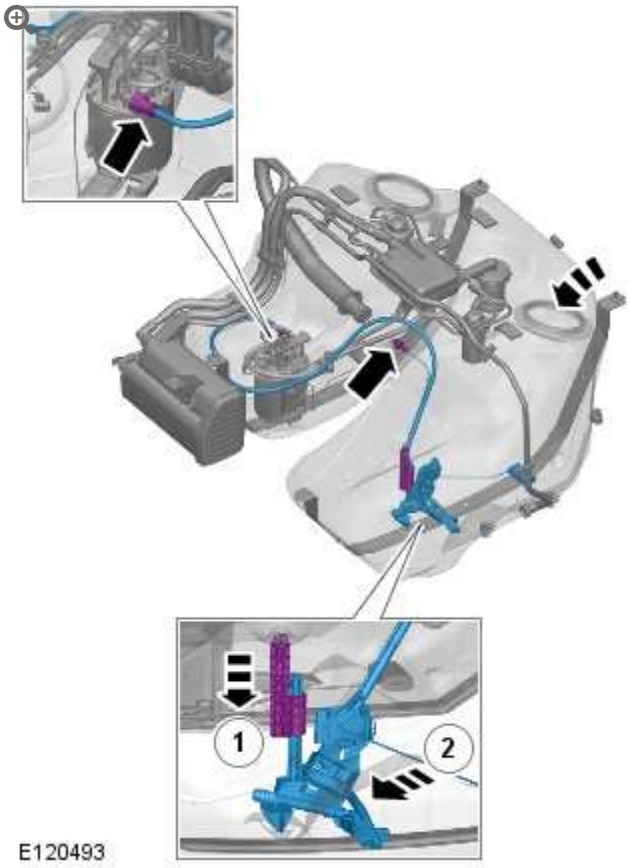

SPEED CONTROL – V8 5.0L PETROL/V8 S/C 5.0L PETROL, 5.0L

SPECIFICATIONS

ITEM	SPECIFICATION
Speed control sensor vertical alignment	90° ± 1.2°

DESCRIPTION	NM	LB-FT	LB-IN
Speed control sensor bracket to front bumper beam retaining nuts	9	-	80
Speed control switch retaining bolts	2	-	18

SPEED CONTROL DEACTIVATOR SWITCH

(G1224175)

REMOVAL AND INSTALLATION

19.75.35	SWITCH - BRAKE - RENEW	ALL DERIVATIVES	0.1	USED WITHINS	+

REMOVAL

NOTE:

Removal steps in this procedure may contain installation details.

1. Refer to: Battery Disconnect and Connect (414-01, General Procedures).

2.



3.

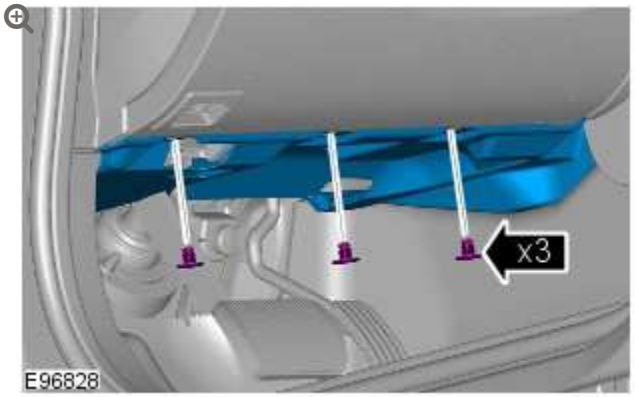

4.

CAUTION:

Make sure that the brake pedal remains in the rest position during this procedure.

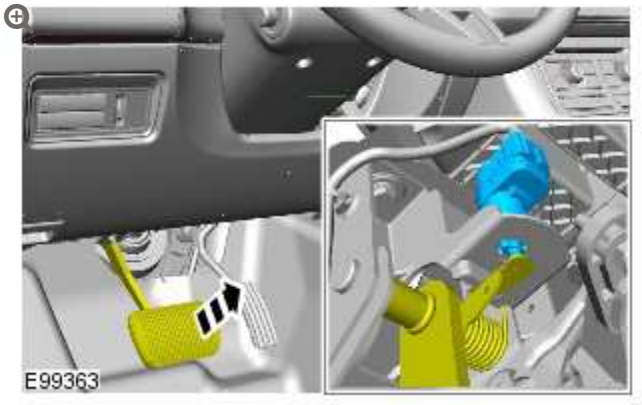

5.

CAUTION:

Make sure that the brake pedal remains in the rest position during this procedure.

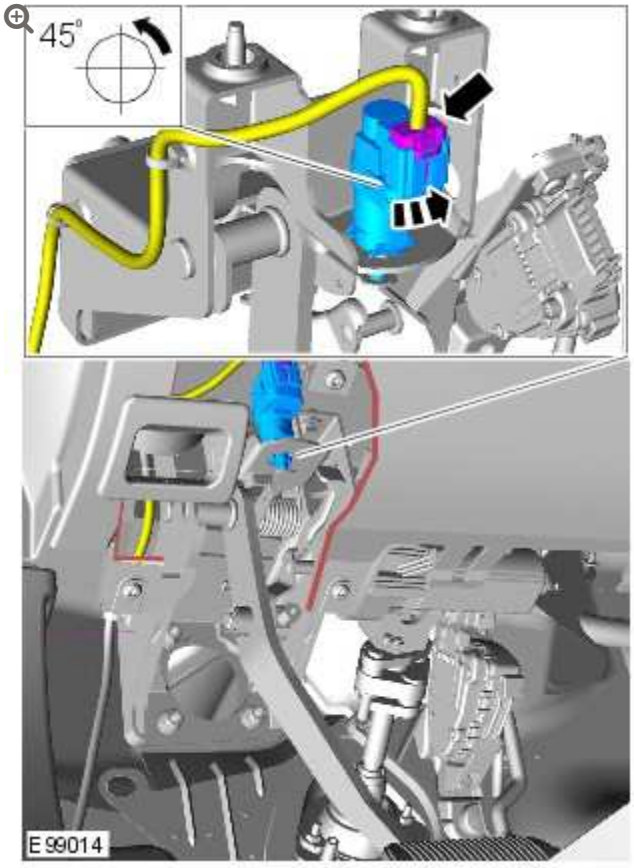

6.

CAUTION:

Make sure that the brake pedal remains in the rest position during this procedure.

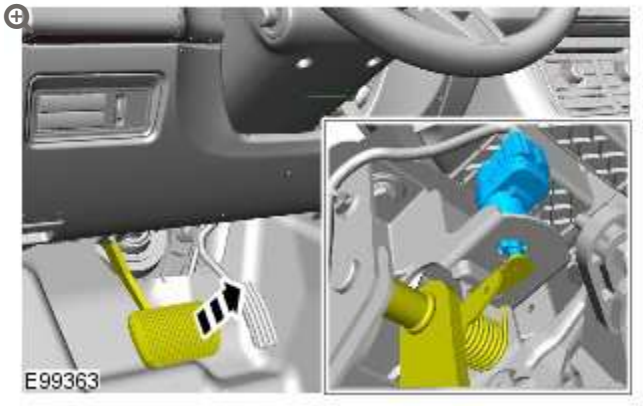

INSTALLATION

1. To install, reverse the removal procedure.

SPEED CONTROL SENSOR

(G1348271)

REMOVAL AND INSTALLATION

19.75.35	SWITCH - BRAKE - RENEW	ALL DERIVATIVES	0.1	USED WITHINS	+

REMOVAL

NOTE:

Removal steps in this procedure may contain installation details.

1. Disconnect the battery ground cable.
   Refer to: Specifications (414-00, Specifications).

2. **WARNING:**

   Make sure to support the vehicle with axle stands.

   Raise and support the vehicle.

3. Refer to: Front Bumper Cover (501-19, Removal and Installation).

4. 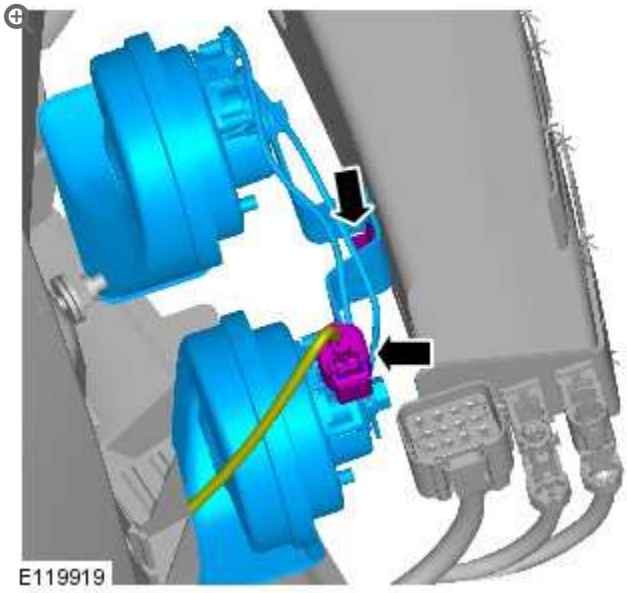

Torque: **20 Nm**

5. 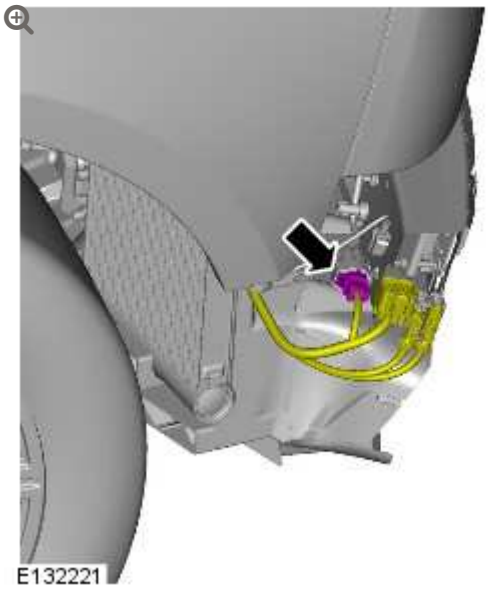

6.

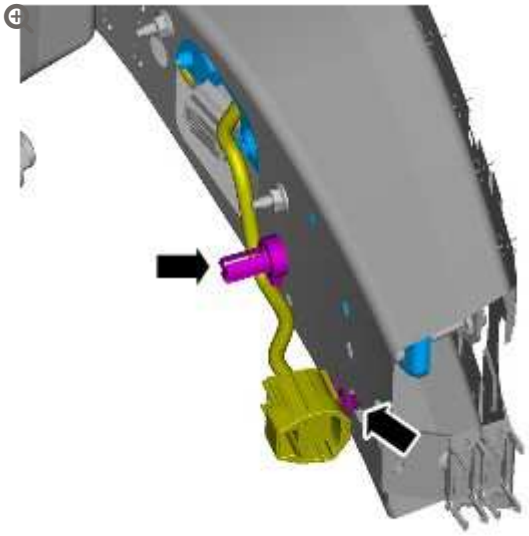

E132222

7.

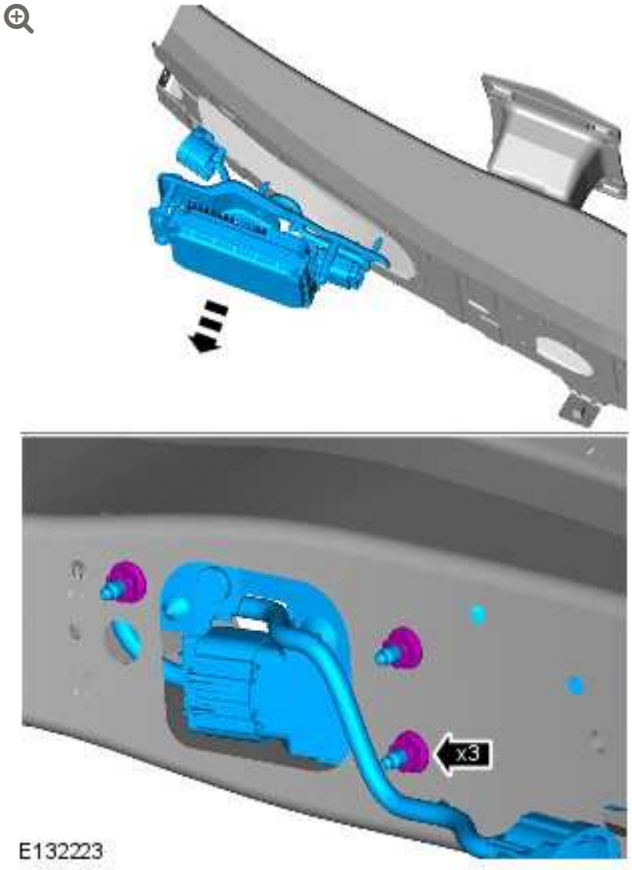

E132223

Torque: **9 Nm**

8.

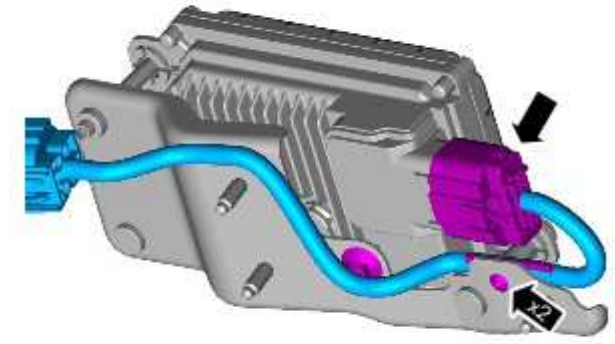

E132224

9.

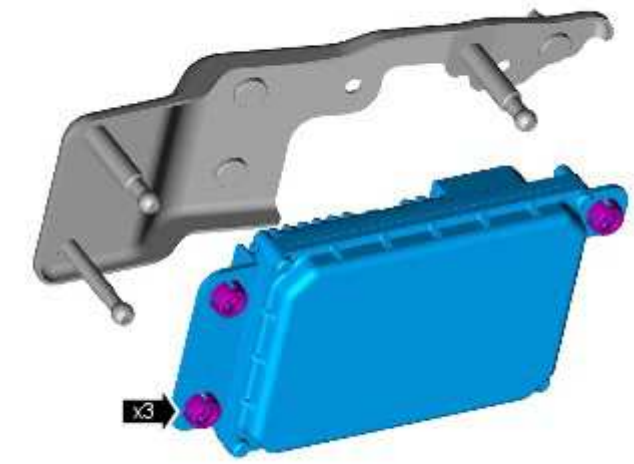

E132225

INSTALLATION

CAUTION:

Make sure the ball and socket are fully engaged.

1. To install, reverse the removal procedure.

2. Refer to: Speed Control Sensor Adjustment (310-03, General Procedures).

3. Refer to: Front Bumper Cover (501-19, Removal and Installation).

4. Connect the battery ground cable.
   Refer to: Specifications (414-00, Specifications).

SPEED CONTROL - V8 5.0L PETROL/V8 S/C 5.0L PETROL, 5.0L

SPEED CONTROL SENSOR ADJUSTMENT (G1348360)

GENERAL PROCEDURES

19.25.02	FILTER - MAIN - RENEW	5000 CC, AJ V8	0.3	USED WITHINS	+
19.75.27	SPEED CONTROL SENSOR - CHECK AND ADJUST ALIGNMENT	ALL DERIVATIVES	1	USED WITHINS	

SPECIAL TOOL(S)



310-148

Setting Tool, Speed Control

NOTES:

- Removal steps in this procedure may contain installation details.
- This procedure details how to adjust the speed control sensor vertically. There is no horizontal adjustment required.

1. Refer to: Front Bumper Cover (501-19 Bumpers, Removal and Installation).

2. **CAUTION:**

   Drive the vehicle on to a flat, level surface.

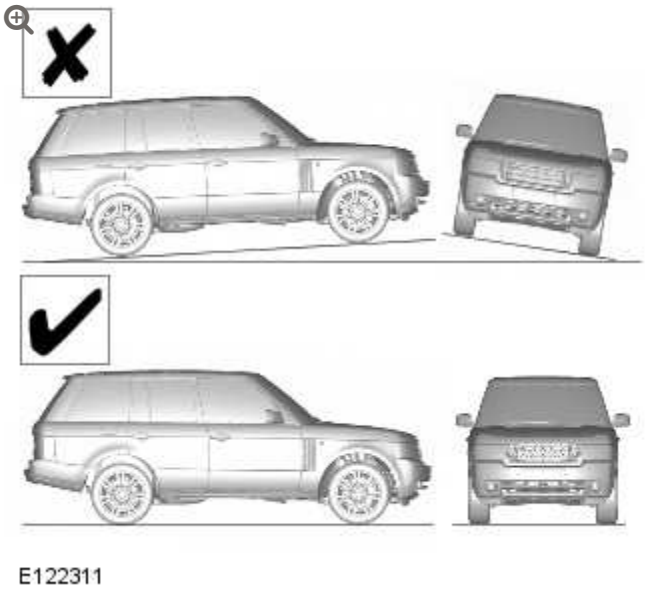

E122311

Set the air suspension ride height to the STANDARD setting.

3.

NOTES:

- Using the special tool, check the speed sensor is level, (+/- 0.5 degree).
- Make sure that the special tool is installed to the front of the speed control sensor as it is shown in the illustration to check the level.



Special Tool(s): 310-148

4.

NOTES:

- The speed sensor has no mechanical horizontal adjustment.
- Rotate the vertical adjuster.

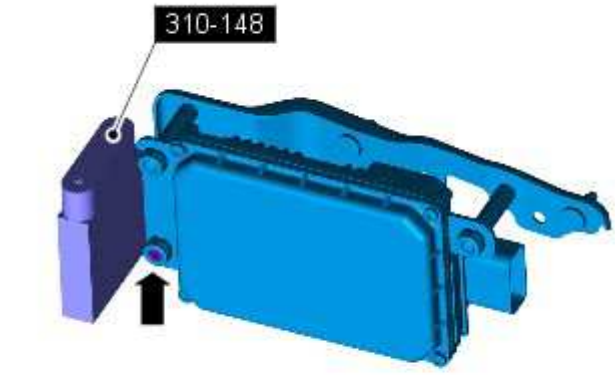

E132168

Using the special tool, set the speed control sensor.

5. Refer to: Front Bumper Cover (501-19 Bumpers, Removal and Installation).

2012.0 RANGE ROVER (LM), 310-03

SPEED CONTROL – V8 5.0L PETROL/V8 S/C 5.0L PETROL, 5.0L

DESCRIPTION AND OPERATION

COMPONENT LOCATION 5.0L V8

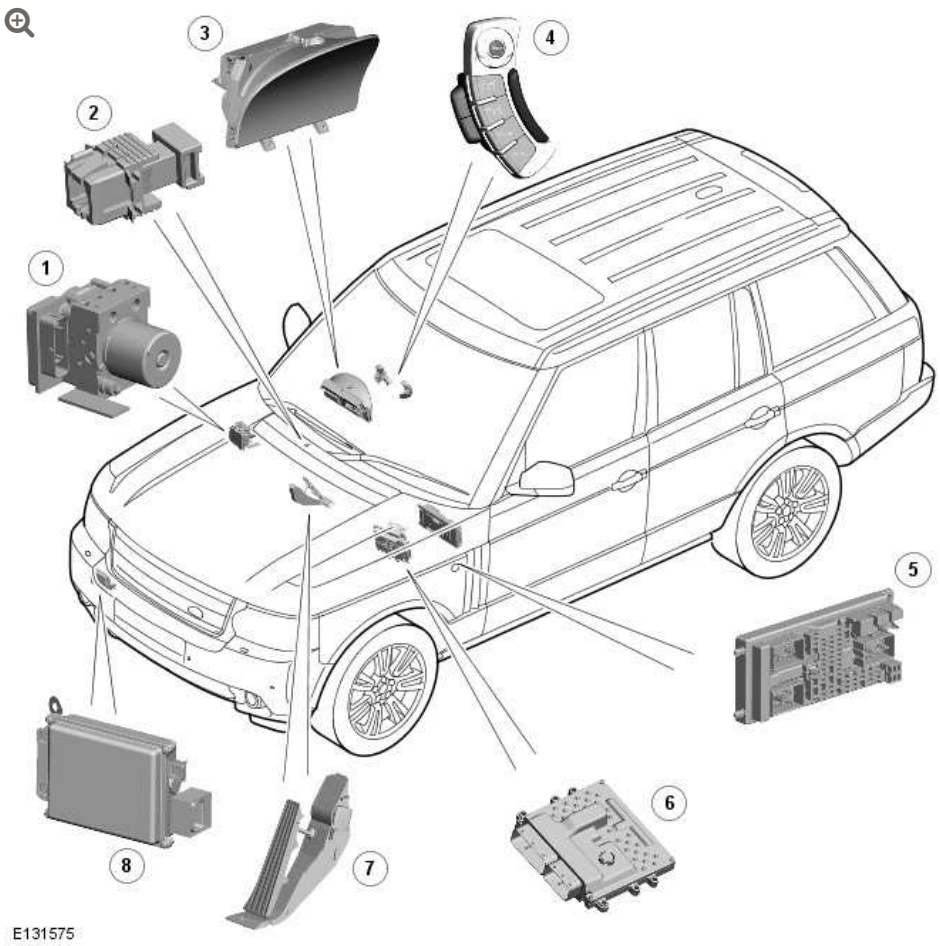

ITEM	DESCRIPTION
1	Anti-lock Brake System (ABS) module
2	Stop lamp switch
3	Instrument cluster
4	Steering wheel mounted speed control switches and steering wheel switch module
5	Central Junction box (CJB)
6	ECM (engine control module)
7	APP (accelerator pedal position) sensor
8	Adaptive speed control radar module

INTRODUCTION

There are two variants of speed control available; a standard system and an adaptive system. The standard system maintains a set speed selected by the driver until operation is suspended or cancelled by a further input from the driver. The adaptive system includes the same functionality as the standard system, but also has the ability to:

- Reduce vehicle speed, to less than the set speed, in order to maintain a selected distance behind a slower moving vehicle
- Accelerate the vehicle back to the set speed, once the way ahead is clear, after reducing the set speed because of a slower moving vehicle
- Alert the driver when rapidly approaching a slower moving vehicle.

Both systems are controlled by the Engine Control Module (ECM).

The standard system and the adaptive system both have the following components:

- Accelerate set **+** switch

- Decelerate - switch
- RESUME switch
- CANCEL switch.

Both systems also use:

- The ECM
- The stop lamp switch and the CANCEL switch
- The Accelerator Pedal Position (APP) sensor.

The adaptive system incorporates the following additional components:

- An adaptive speed control module
- An adaptive speed control sensor
- Forward alert - selected by RH (right-hand) instrument cluster menu button on steering wheel
- A time gap switch
- An interface to the Anti-lock Brake System (ABS).

STANDARD SPEED CONTROL

The standard speed control system is integrated with the within the ECM (engine control module) and uses fueling intervention to automatically maintain a set vehicle speed. Once engaged, the system can also be used to accelerate the vehicle without using the accelerator pedal.

The standard speed control system also uses inputs from the Stop lamp switch, the APP (accelerator pedal position) sensor, the ECM and the ABS (anti-lock brake system) module.

The standard speed control is operated by the driver using only the steering wheel switches. When standard speed control is active, the ECM controls the electronic throttle to adjust the fuel supply as required to maintain the set speed.

The minimum set speed for standard speed control is 20 mph (32 km/h). Speed control is automatically suspended if the following conditions apply:

- Vehicle speed falls below 20 mph (32 km/h)
- The brake pedal is pressed
- The cancel button is pressed
- Neutral, park or reverse gear is selected
- The difference between actual speed and the set speed is too great
- When the maximum (limited) vehicle speed is reached
- If the accelerator pedal is used to accelerate beyond the set speed for too long
- Engine speed too high (cancel limit set just below red line).

STANDARD SPEED CONTROL SWITCHES

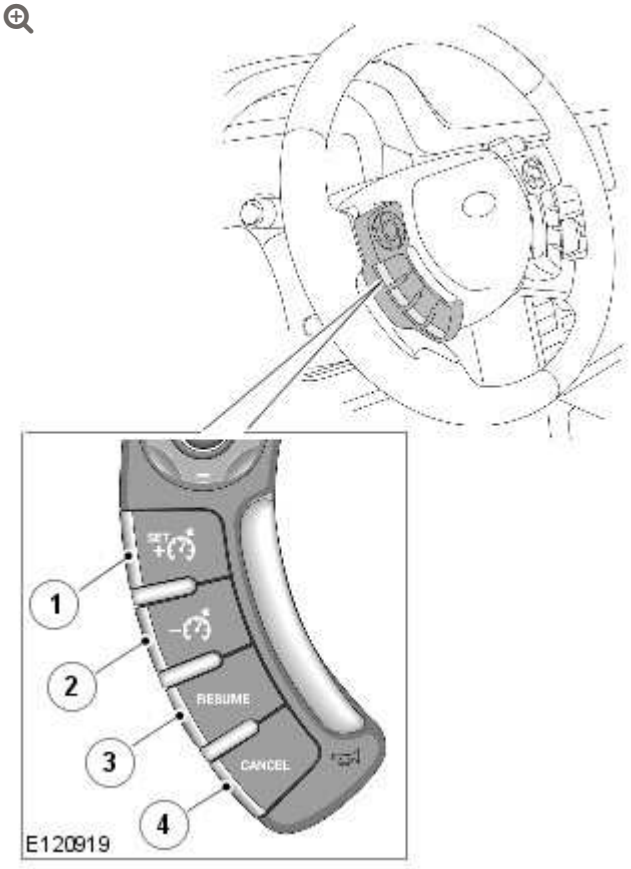

ITEM	DESCRIPTION
1	Set speed + accelerate switch
2	Decelerate - switch
3	RESUME switch
4	CANCEL switch

There are 4 standard speed control switches:

- Set speed **+** accelerate switch
- Decelerate **-** switch
- Cancel switch
- Resume switch.

The standard speed control switches are located on the LH (left-hand) side of the steering wheel. The switches are resistive ladder type switches which vary the resistance of a 5 volt signal sent to them. The resistive ladder is wired to the Steering Wheel Module (SWM), the SWM is a LIN (local interconnect network) node which transmits the data to the CJB (central junction box) which gateways the data onto the high speed CAN (controller area network) bus. In the event of the ECM logging a cruise switch fault DTC (diagnostic trouble code), fault finding should start at the SWM and clockspring. The ECM diagnostic detects that the SWM hasn't provided an updated live counter.

The LIN bus is shared with the keyless vehicle module and docking of the key may cause cruise to become unavailable. This is due to the security module taking over the LIN bus during the key check.

Engage Speed Control

Speed control is engaged by pressing the set speed accelerate **+** switch. Once engaged the speed can be increased by one of 3 methods:

- Press and hold the set speed accelerate **+** switch which will cause the vehicle to accelerate. When the switch is released the attained speed will be set as the cruise speed.
- Repeatedly pressing the set speed accelerate **+** switch. Each press increases the vehicle speed by 1 mph (2 km/h).
- Use the accelerator pedal to increase the vehicle speed. Once the required speed is reached, a single press of the set speed accelerate **+** switch will set the cruise speed.

When the target speed has been set, a green marker will appear on the outer circumference of the speedometer in the instrument cluster, adjacent to the set speed. If the set speed is changed the marker will move accordingly.

Reduce Cruising Speed

The set speed can be reduced by pressing and holding the decelerate - switch until the required speed is reached. When the switch is released the speed is reset at that value. The set speed can be reduced incrementally by pressing and releasing the decelerate - switch. Each press will reduce the speed by 1 mph (2 km/h).

Set Speed Adjustment

Speed control adjustment is limited around the current vehicle speed. This means speed adjustment won't occur when resuming or if the vehicle speed is noticeably different to set speed. This is noticeable when resuming speed control and a large difference exists between the set speed and the current speed. The driver can set a new speed, but can't adjust the old speed.

Suspend Speed control

Suspending Speed Control means speed control has been deactivated without loss of the memory speed. In all suspend events the memory speed is maintained. Speed control can be suspended numerous events, as described in the general description, there are some additional suspend conditions:

- Park, Reverse or Neutral selected using transmission gear selector
- Hill Descent Control (HDC) has been selected
- Low range has been selected on the transfer box
- Cancel button has been pressed.

A single press of the RESUME switch will resume speed control at the previously set speed.

NOTE:

In the event that a memory speed has been lost during a driving cycle, confirm with the customer if the "Cruise Not Available" message was observed. Loss of memory speed implies a fault has occurred.

ADAPTIVE SPEED CONTROL

The adaptive speed control system uses a forward looking radar module to scan the road ahead, looking for objects that are moving at a different rate to itself. When a target is identified the adaptive speed control system will monitor the time gap between it and the target vehicle. When that gap falls below a set driver selected level, the adaptive speed control system will intervene slowing the vehicle by backing off the throttle and/or applying the brakes, until the correct gap is attained. The driver can choose between four gap settings, 1, 1.4, 1.8 and 2.2 seconds.

The system will detect but not react to the following:

- Vehicles in the oncoming lane
- Stationary vehicles
- Pedestrians
- Vehicles not in the same lane.

Adaptive speed control is active when the vehicle is moving at a minimum speed of 20 mph (32 km/h) and a maximum speed of 112 mph (180 km/h). Activate adaptive speed control by pressing the set speed + switch to select a set speed, as described for standard speed control. The adaptive speed control system will maintain the set speed, but will reduce the vehicle's speed when it detects a slower vehicle ahead.

It is important to note that the system is intended for use in limited driving situations, does not remove control and responsibility from the driver, and at all times can be quickly overridden. The adaptive speed control system is not a collision warning system and will not react to stationary objects. The system does not operate below a minimum speed of approximately 20 mph (32 km/h) since it is unsuitable for use in cities or congested traffic. The system is best suited to main roads/ highways with gradual bends.

The ECM, throttle body and throttle control are unchanged from those used for the standard speed control variants.

RADAR SENSING

The adaptive speed control system is based on the use of a front mounted electronic radar module. The module transmits a radar beam forward of the vehicle and detects the returning signals reflected off other vehicles and objects ahead.

The radar beam is electronically scanned at a rate of 20 sweeps/second across a total arc of 20° centered on the longitudinal axis of the vehicle. The radar operates at millimetric wavelengths (76 - 77 GHz) and transmits a frequency modulated continuous wave signal at a relatively low power level (no high power pulses). The radar provides a list of 64 targets.

With the ignition ON, the adaptive speed control radar module is powered up but no radar transmissions are emitted until the vehicle is in motion. The radar module detects three primary parameters of objects within the scanned arc. These are:

- Range
- Relative velocity
- Angle.

Range

The radar module detects the presence and ranges of different vehicles and objects within the scanned arc up to a distance of approximately 130 meters (426.5 feet). The transmitted signal frequency changes continuously in a cyclic pattern (modulation). This means that, in the time taken for the signal wave front, to travel to and from a target vehicle (or other object), the transmission frequency will have changed. The difference between the received signal frequency and the new transmission frequency is proportional to the distance between the transmitting vehicle and the target vehicle.

Relative Velocity

When the signal is reflected off a vehicle moving at a different speed (opening or closing gap) an effect known as the Doppler shift causes an extra frequency modulation to be imposed on the signal. This Doppler frequency varies with the relative speed of the vehicle being followed, enabling the system to differentiate between vehicles traveling at different speeds and also between moving vehicles and stationary objects.

Angle

The antenna consists of several receivers; if an object is offset from the vehicle centre line, there will be a small time difference between the receive time on the near side compared to the far side. The radar can use this time difference to measure the angular position of the object. This enables the system to distinguish between vehicles in different lanes and between vehicles and roadside objects.

FOLLOW MODE

A set speed is selected in the normal speed control manner and this speed is maintained until a slower vehicle is encountered in the lane ahead. When the vehicle ahead comes within the effective range of the radar sensor, the system identifies it as a target vehicle and an icon is illuminated on the instrument cluster to indicate that the

system is in "follow mode". When the distance between the two vehicles closes to a set time gap, the adaptive speed control system closes the throttle and if necessary applies the brakes to maintain the set time gap. Follow mode is effectively a closed loop system. If several vehicles are ahead, the closest vehicle is chosen as the target to follow. If the target vehicle moves out of radar range, or if either vehicle changes lane or drops below the minimum operating speed, the system exits follow mode and the follow mode icon is extinguished. The adaptive speed control system will only raise its speed to the originally set speed, it will not accelerate past this speed to maintain a time gap.

Driver operation of the foot brake or control switches will immediately cancel adaptive speed control.

When the vehicle is in follow mode the Forward Alert warning indicator is illuminated in the instrument cluster and the current gap setting will be displayed in the message center.



E120920

ITEM	DESCRIPTION
1	Forward Alert active (green)
2	Adaptive Speed Control active (amber)

ITEM	DESCRIPTION
3	Speed control active (green)

SYSTEM RESTRICTIONS

The adaptive speed control system is only intended to provide enhanced speed control as described above in certain restricted conditions. The following illustration show circumstances where the adaptive speed control system may brake late or unexpectedly. The driver is required to intervene in these situations.

The following points should be noted:

- Automatic braking is limited to approximately 30% of full pressure (0.3 G deceleration) and is intended to provide a smooth, gradual deceleration in follow mode conditions. Harsh braking by the target vehicle or following the target vehicle down to very low speeds or to a halt will require driver intervention on the brakes
- While the radar sensor detects moving and stationary targets for assessment of the environment ahead, the system does not react to or provide any control in situations other than follow mode conditions. Stationary or slow moving vehicles (below 6 mph (10 km/h)), pedestrians, objects on the road and oncoming vehicles in the same lane are not recognized.

WARNING:

It must be emphasized that the adaptive speed control system is not a collision warning or avoidance system and that, other than the limited conditions of follow mode, driver intervention will be necessary to control the vehicle speed.

The following illustration shows circumstances where the adaptive speed control system may brake late or unexpectedly. The driver is required to intervene in these situations.

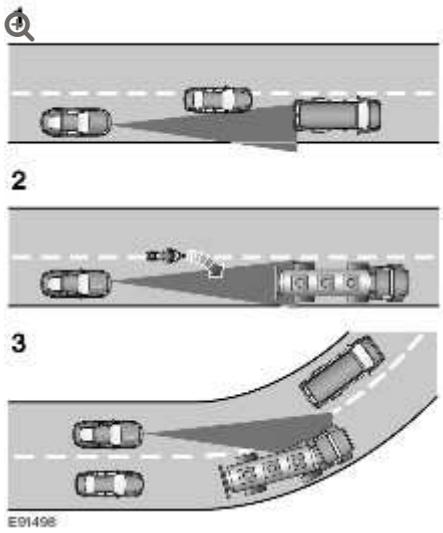

ITEM	DESCRIPTION
1	Driving on a different line to the vehicle in front.
2	Vehicles that merge into the same lane are only detected once they have moved fully into the lane.
3	On bends in the road there can be issues with detection of the vehicle in front when going into and coming out of a bend.

In follow mode, some situations may cause target ambiguities for the detection system. These situations include:

- The nearby presence of a third vehicle when driving on a line slightly offset to the target vehicle
- Vehicles edging into the lane ahead which are not detected by the system until they have moved into the radar beam.

On the approach to, or exit from a bend, a target vehicle may be lost or a new target acquired as vehicles ahead change their angular position with respect to the radar sensor. On a straight road, if the sensing vehicle is in follow mode below its selected set speed, losing the target vehicle will cause the sensing vehicle to accelerate to this set speed. This acceleration is undesirable either on, or entering a bend when the target is suddenly lost, and in this situation the system inhibits the resumption of the set speed.

The speed control system compares vehicle speed data from the ABS module with the relative speed of an external object as detected by the radar sensor to ascertain whether the object is stationary or not.

NOTE:

If tires are fitted which are different in diameter from those specified for the vehicle, the vehicle speed, calculated by the ABS module, will not be the true road speed. This situation may cause stationary objects to be falsely identified as moving vehicles and result in automatic deceleration on a clear road.

The radar continuously monitors both moving vehicles and stationary objects to determine if it can 'see' normally. If the radar can detect only a few objects it may be blocked by an accumulation of snow or mud or a physical blockage such as wet paper or an incorrectly located number plate. In a few empty roads areas where there are few roadside objects or other vehicles to detect, it may determine that it is blocked and inhibit adaptive speed control; a DTC is recorded in this instance. The system will reset after the ignition is cycled. In this case the module is not faulty and should not be replaced.

ADAPTIVE SPEED CONTROL SWITCHES

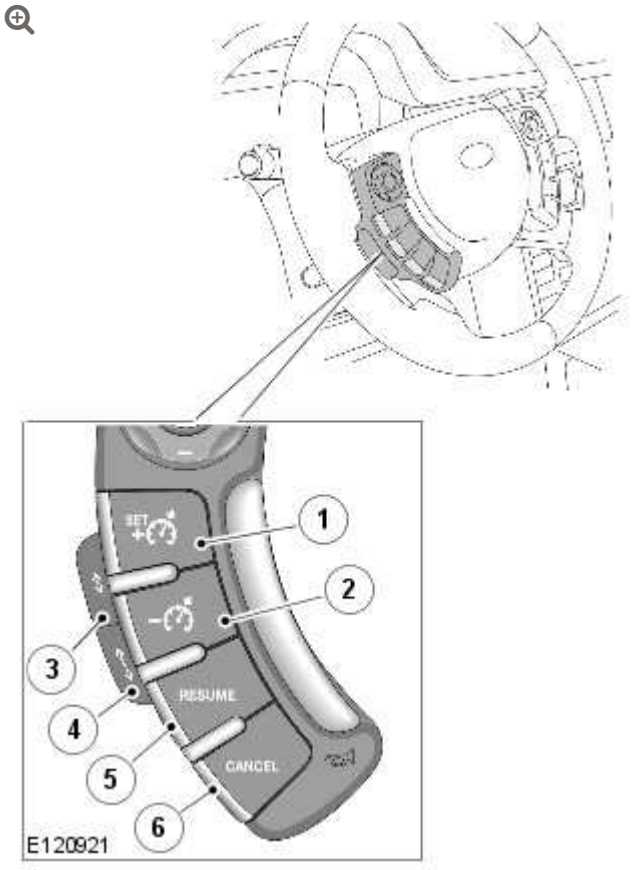

ITEM	DESCRIPTION
1	Set speed + accelerate switch
2	Decelerate - switch
3	Gap decrease switch
4	Gap increase switch
5	RESUME switch
6	CANCEL switch

The adaptive speed control system is controlled from the LH steering wheel switches. The switches are the same as used for normal speed control with the addition of 2 time gap setting switches. The time gap setting switches allows the driver to adjust the time gap to one of four pre-set time gaps. The selected time gap is displayed in the vehicle message center.

The time gap will return to the default gap (the third setting) each time the ignition is cycled.

ADAPTIVE SPEED CONTROL RADAR MODULE

The adaptive speed control radar module is located on the RH side behind the front bumper cover. The radar module is connected to the other vehicle systems via the high speed CAN bus. If the unit is replaced in service the unit must be re-levelled vertically using a level gauge (digital or bubble type).

Horizontal alignment is achieved by putting the module in service mode with an approved Land Rover diagnostic system. The vehicle is then driven for a short period while the sensor calibrates itself. Calibration is complete when the 'follow' icon in the instrument cluster stops flashing.

FORWARD ALERT

Limited detection and warning of objects ahead is provided during adaptive speed control operation by the Forward Alert warning. The enhanced Forward Alert warning provides additional warnings when the adaptive speed control is not engaged. If an object is detected close ahead, a warning tone will be emitted and a Forward Alert message will be displayed. The brake will not be applied.

The Forward Alert system is active when the warning indicator in the instrument cluster is illuminated. Forward Alert does not initiate any action, the driver must take the appropriate action when the message is displayed. The system monitors driver intervention and may not issue the warning if the driver has taken the appropriate action (braking, steering or indicating) early enough.

The sensitivity of the warning can be changed using the gap increase and decrease switches when the adaptive cruise control is not active. Confirmation of the gap change is given by Forward Alert being displayed in the message center.

Forward Alert can be switched on or off by the driver using the instrument cluster menu selection.

ADVANCED EMERGENCY BRAKE ASSIST

WARNING:

> Advanced Emergency Brake Assist is an additional safety system and is not intended to override driver responsibility for driving with care and attention.

On vehicles fitted with the Advanced Emergency Brake Assist system, brake response is improved during emergency braking when a moving vehicle is detected close ahead. The system activates if the risk of collision increases after the Forward Alert warning is issued.

After a Forward Alert warning is displayed, the brakes are automatically applied gently in preparation for rapid braking. If the brake pedal is then pressed quickly then braking is fully implemented by the Emergency Brake Assist system, even if the pressure on the brake pedal is light.
For additional information, refer to: Anti-Lock Control - Traction Control (206-09A Anti-Lock Control - Traction Control, Description and Operation).

Advanced Emergency Brake Assist is available at speed above 5 mph (7 km/h) and will function even when Forward Alert and adaptive cruise control are switched off.

If a fault occurs in the system a message Forward Alert Unavailable is displayed in the message center. Advanced Emergency Brake Assist will not be available until the fault is rectified.

CONTROL DIAGRAM

NOTE:

A = Hardwired; **D** = High Speed CAN bus, **O** = LIN bus; **U** = Private CAN bus

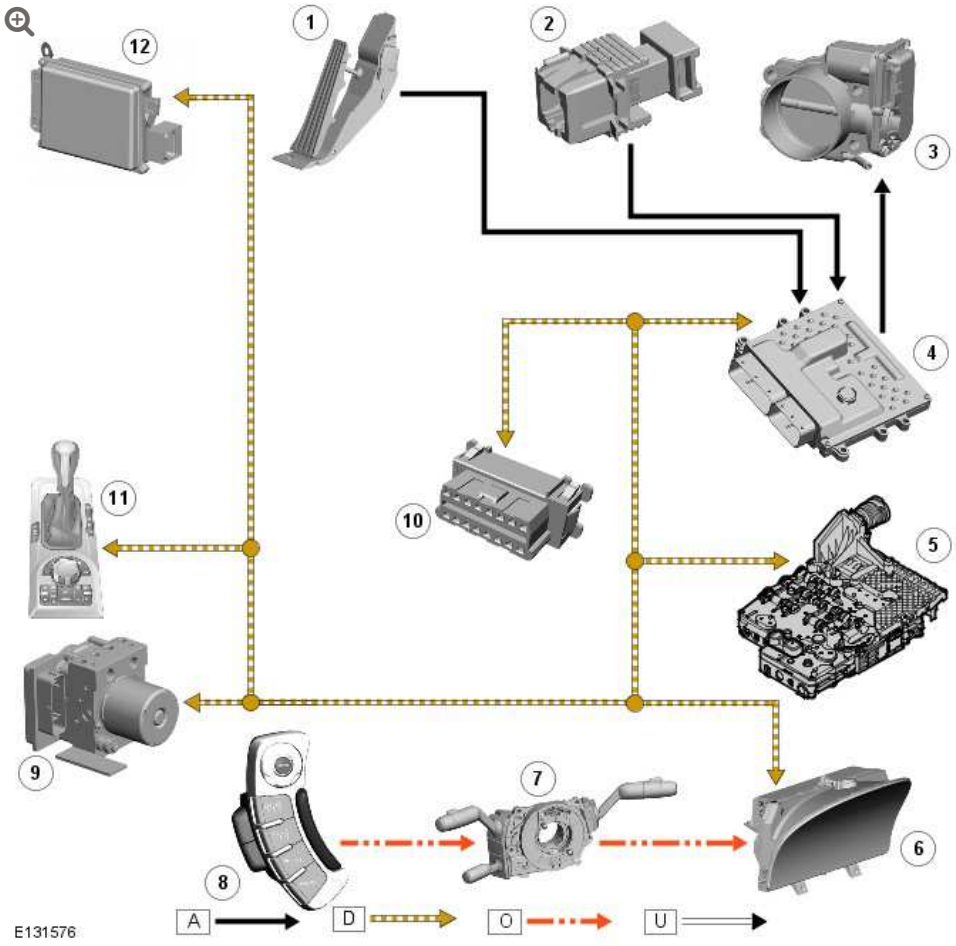

ITEM	DESCRIPTION
1	APP sensor
2	Stop lamp switch
3	Electric throttle
4	ECM
5	TCM (transmission control module)
6	Instrument cluster
7	Clockspring

ITEM	DESCRIPTION
8	Steering wheel speed control switches (adaptive speed control version shown)
9	ABS (anti-lock brake system) module
10	Diagnostic socket
11	Transmission selector
12	Adaptive speed control radar Module (adaptive speed control system only)

SPEED CONTROL – V8 5.0L PETROL/V8 S/C 5.0L PETROL, 5.0L

DIAGNOSIS AND TESTING

PRINCIPLES OF OPERATION

There are two options of speed control available, adaptive speed control and non-adaptive speed control. For a detailed description of the speed control systems, refer to the relevant Description and Operation section in the workshop manual. REFER to: Speed Control (310-03B, Description and Operation).

INSPECTION AND VERIFICATION

1. Verify the customer concern.
2. Visually inspect for obvious signs of damage and system integrity.

Visual Inspection

MECHANICAL	ELECTRICAL
▪ Speed control sensor ▪ Ensure the speed control sensor is free from obstructions ▪ Speed control module	▪ Fuses ▪ Wiring harness ▪ Electrical connector(s) ▪ Steering wheel switches

MECHANICAL	ELECTRICAL
	▪ Brake switch ▪ Speed control sensor ▪ Speed control module ▪ Engine Control Module (ECM)

3. If an obvious cause for an observed or reported concern is found, correct the cause (if possible) before proceeding to the next step.

4. If the cause is not visually evident, verify the symptom and refer to the Symptom Chart, alternatively, check for Diagnostic Trouble Codes (DTCs) and refer to the DTC Index.

SPEED CONTROL SENSOR ADJUSTMENT (VEHICLES WITH ADAPTIVE SYSTEM INSTALLED)

An incorrectly aligned speed control sensor can cause incorrect system operation. Before starting any repair work on the speed control system, on vehicles with the adaptive system installed, check the adjustment of the speed control sensor.

SYMPTOM CHART

SYMPTOM	POSSIBLE CAUSE	ACTION
Speed control inhibited or disabled	▪ Default mode enabled ▪ Supply voltage to speed control module ▪ Supply voltage to speed control sensor	▪ Check for Network related DTCs that could be caused by power failure to the module or sensor and refer to DTC Index. ▪ Check for steering wheel speed control switch and circuit faults.

SYMPTOM	POSSIBLE CAUSE	ACTION
	▪ Steering wheel speed control switch(s) ▪ Steering wheel speed control switch circuit ▪ Throttle sensors ▪ Brake switch	▪ Check for engine throttle position sensor DTCs and refer to the relevant DTC Index. ▪ Check for brake switch faults.
Unable to regulate/adjust vehicle speed	▪ Steering wheel switch malfunction	▪ Check for steering wheel speed control switch and circuit faults.
Unable to cancel speed control from steering wheel	▪ Steering wheel switch malfunction	▪ Check for steering wheel speed control switch and circuit faults.
Unable to cancel speed control from brake pedal	▪ Brake switch malfunction	▪ Check for brake switch faults.

DTC INDEX

For a complete list of all Diagnostic Trouble Codes (DTCs) that could be logged on this vehicle, please refer to Section 100-00.
REFER to: Diagnostic Trouble Code (DTC) Index (100-00, Description and Operation).

CLIMATE CONTROL SYSTEM – GENERAL INFORMATION

SPECIFICATIONS

Lubricants, Fluids, Sealers and Adhesives

DESCRIPTION	SPECIFICATION
Air conditioning (A/C) refrigerant	HFC 134a
A/C compressor oil	ND-OIL8 or Sanden SP10

Capacities

DESCRIPTION	GRAMMES
A/C refrigerant - vehicles fitted with 2 zone - vehicles with 3.6 diesel	700
A/C refrigerant - vehicles fitted with 2 zone - vehicles with 5.0L	750
A/C refrigerant - vehicles fitted with 4 zone - vehicles with 3.6 diesel	880
A/C refrigerant - vehicles fitted with 4 zone - vehicles with 5.0L	930

Refrigerant Oil Adding Capacities

NOTE:

Rotate the A/C compressor shaft at least 6 to 8 turns when draining the refrigerant oil.

ITEM	MILLILITERS
A/C condenser core	Add 33
A/C evaporator	Add 46
A/C compressor	1. Drain old A/C compressor. With drain plug removed and ports uncapped, rotate shaft to remove A/C compressor oil and measure the amount of oil captured. 2. Drain new A/C compressor into a clean vessel. With drain plug removed and ports uncapped, rotate shaft to remove oil. Then add back a quantity of the new oil that is identical to the quantity of oil removed from the old A/C compressor. However, if this quantity is less than 30ml, then make it up to 30ml.
A/C lines - if air conditioning has been operational.	Add 10 per A/C line
A/C system after flushing - with compressor included - vehicles fitted with 2 zone - vehicles with 3.6 diesel	Add 120
A/C system after flushing - with compressor included - vehicles fitted with 2 zone - vehicles with 5.0L	Add 110
A/C system after flushing - with compressor included - vehicles fitted with 4 zone - vehicles with 3.6 diesel	Add 170
A/C system after flushing - with compressor included - vehicles fitted	Add 200

ITEM	MILLILITERS
with 4 zone - vehicles with 5.0L	
A/C system after flushing - without a new compressor installed - remaining A/C compressor oil is to be drained - vehicles fitted with 2 zone - vehicles with 3.6 diesel	Add 120
A/C system after flushing - without a new compressor installed - remaining A/C compressor oil is to be drained - vehicles fitted with 2 zone - vehicles with 5.0L	Add 110
A/C system after flushing - without a new compressor installed - remaining A/C compressor oil is to be drained - vehicles fitted with 4 zone - vehicles with 3.6 diesel	Add 170
A/C system after flushing - without a new compressor installed - remaining A/C compressor oil is to be drained - vehicles fitted with 4 zone - vehicles with 5.0L	Add 200
A/C system after flushing - vehicles fitted with 2 zone - with a new compressor installed - A/C compressor supplied with 120ml	-
A/C system after flushing - vehicles fitted with 2 zone - with a new compressor installed -	-

ITEM	MILLILITERS
A/C compressor supplied with 110ml	
A/C system after flushing - vehicles fitted with 4 zone - with a new compressor installed - A/C compressor supplied with 120ml	Add 50
A/C system after flushing - vehicles fitted with 4 zone - with a new compressor installed - A/C compressor supplied with 110ml	Add 90

CLIMATE CONTROL SYSTEM – GENERAL INFORMATION

DIAGNOSIS AND TESTING

PRINCIPLES OF OPERATION

For a detailed description of the Climate Control System, refer to the relevant Description and Operation section in the workshop manual. REFER to:

Air Distribution and Filtering (412-01A Air Distribution and Filtering, Description and Operation),
Auxiliary Heater (412-02B Auxiliary Heating, Description and Operation),
Air Conditioning (412-03A Air Conditioning, Description and Operation),
Auxiliary Climate Control (412-03B Auxiliary Climate Control, Diagnosis and Testing).

INSPECTION AND VERIFICATION

WARNING:

Servicing must be carried out by personnel familiar with both vehicle system and the charging and testing equipment. All operations must be carried out in a well ventilated area away from open flame and heat sources.

CAUTION:

Diagnosis by substitution from a donor vehicle is **NOT** acceptable. Substitution of control modules does not guarantee confirmation of a fault, and may also cause additional faults in the vehicle being tested and/or the donor vehicle.

NOTES:

- If a control module or a component is suspect and the vehicle remains under manufacturer warranty, refer to the Warranty Policy and Procedures manual, or determine if any prior approval programme is in operation, prior to the installation of a new module/component.
- When performing voltage or resistance tests, always use a digital multimeter accurate to three decimal places, and with an up-to-date calibration certificate. When testing resistance always take the resistance of the digital multimeter leads into account.
- Check and rectify basic faults before beginning diagnostic routines involving pinpoint tests.

1. Verify the customer concern

2. Visually inspect for obvious signs of damage and system integrity

Visual Inspection

MECHANICAL	ELECTRICAL
▪ Coolant level ▪ Hoses ▪ Coolant pump ▪ Cabin air filter ▪ Primary drive belt ▪ Air conditioning compressor ▪ Thermostatic expansion valve ▪ Receiver drier ▪ Air conditioning condenser ▪ Refrigerant pipes ▪ Fuel fired booster heater ▪ Fuel fired booster heater fuel pump ▪ Fuel fired booster heater fuel pipes	▪ Fuses ▪ Wiring harnesses and connectors ▪ Blower ▪ Air conditioning compressor electronic control valve ▪ Electric cooling fan ▪ Automatic temperature control module ▪ Refrigerant pressure sensor

3. If an obvious cause for an observed or reported concern is found, correct the cause (if possible) before proceeding to the next step

4. If the cause is not visually evident, verify the symptom and refer to the Symptom Chart, alternatively check for Diagnostic Trouble Codes (DTCs) and refer to the DTC Index

5. Check DDW for open campaigns. Refer to the corresponding bulletins and SSMs which may be valid for the specific customer complaint and carry out the recommendations as required

AIR CONDITIONING SYSTEM PERFORMANCE CHECK

NOTES:

- Normal pressures for a correctly charged and working system are 1.0 bar to 2.0 bar (low pressure system) and 11.0 bar to 15.0 bar (high pressure system).
- Normal temperature (measured at the center air vent) for a correctly charged and working system is -7°C to -2°C when the ambient temperature is 20°C.

When a failure symptom has been reproduced, refer to the symptom chart. After completing a repair, the air conditioning performance check should be repeated to confirm that the repair is successful.

1. Close the valves on the air conditioning station
2. Connect the air conditioning station to the vehicle charging ports
3. Check that the gauges register pressure
4. Open all doors and the tailgate
5. Start the engine
6. Set the temperature to the lowest setting (all zones)
7. Set the blower speed to maximum
8. Set the recirculate switch to on
9. Set the air conditioning to on and check that the air conditioning compressor clutch engages and that the gauges register a change in pressure

10. Insert a temperature probe into the centre air vent

11. Raise engine speed to 1500rpm and maintain this speed for 5 minutes

12. Check the pressure gauge readings

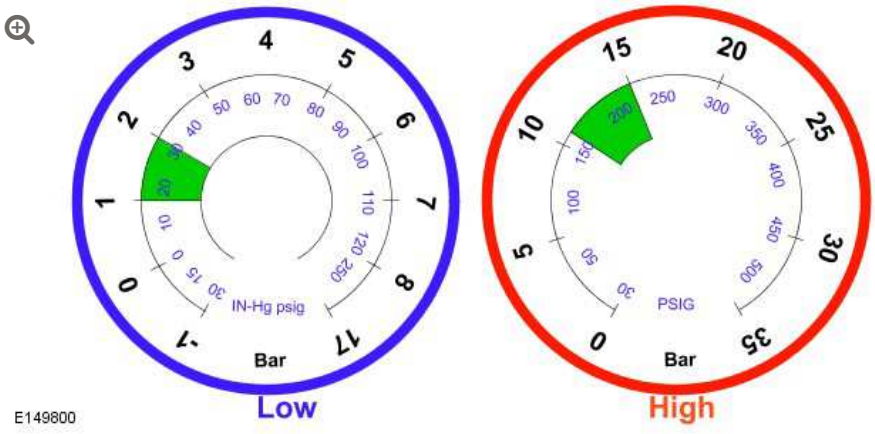

13. Check the temperature reading

SYMPTOM CHART

SYMPTOM	POSSIBLE CAUSES	ACTION
No refrigerant in air conditioning system (no pressure registered on gauges)	▪ Refrigerant leak	▪ GO to Pinpoint Test **A.**
Air conditioning compressor clutch not engaging	▪ Air conditioning compressor clutch circuit short circuit to ground, short circuit to power, open circuit, high resistance ▪ Refrigerant undercharged	▪ Refer to the electrical circuit diagrams and check the air conditioning compressor clutch circuit for short circuit to ground, short circuit to power, open circuit, high resistance ▪ GO to Pinpoint Test **B.**

SYMPTOM	POSSIBLE CAUSES	ACTION
Air conditioning inoperative (no change in pressure when setting the air conditioning to on)	▪ Climate control system fault ▪ Air conditioning compressor internal failure	▪ Using the manufacturer approved diagnostic system, check the automatic temperature control module for related DTCs and refer to the relevant DTC index ▪ GO to Pinpoint Test **C.**
Air conditioning operates briefly and then switches off	▪ Electric cooling fan inoperative ▪ Air conditioning condenser airflow obstructed ▪ Refrigerant overcharged	▪ Check the operation of the electric cooling fan ▪ Check the air conditioning condenser for external obstructions ▪ Using the manufacturer approved equipment, recover the refrigerant. Evacuate and recharge the air conditioning system with the correct quantity of refrigerant and oil
High and low pressure system pressures **unstable**	▪ Refrigerant contaminated ▪ Air conditioning compressor internal failure	▪ GO to Pinpoint Test **D.**
High and low pressure system pressures **normal** and insufficient cooling	▪ Excessive volume of oil in the refrigerant or refrigerant contaminated	▪ Using the manufacturer approved equipment, recover the refrigerant. Evacuate and recharge the air conditioning system with the correct quantity of refrigerant and oil

SYMPTOM	POSSIBLE CAUSES	ACTION
High and low pressure system pressures **too high**	▪ Electric cooling fan inoperative ▪ Air conditioning condenser airflow obstructed ▪ Thermostatic expansion valve internal failure ▪ Refrigerant overcharged ▪ Air conditioning compressor internal failure	▪ GO to Pinpoint Test **E.**
High and low pressure system pressures **too low**	▪ Refrigerant undercharged ▪ Low pressure pipe damaged/restricted	▪ GO to Pinpoint Test **B.**
Low pressure system pressure **too high** and high pressure system pressure **too low**	▪ Air conditioning compressor electronic control valve circuit short circuit to ground, short circuit to power, open circuit, high resistance ▪ Air conditioning compressor electronic control valve internal failure	▪ GO to Pinpoint Test **F.**
Low pressure system pressure **too low** and high pressure system pressure **too high** and frost present on the liquid pipe from the condensor	▪ Liquid pipe from the condensor is restricted ▪ Receiver drier restricted	▪ Check the liquid pipe from the condensor for damage and restrictions. Install a new pipe as necessary ▪ Install a new receiver drier as necessary
Noise from air conditioning system	▪ Air conditioning compressor pulley bearing ▪ Air conditioning compressor pulley foul condition	▪ GO to Pinpoint Test **G.**

SYMPTOM	POSSIBLE CAUSES	ACTION
	▪ Air conditioning compressor clutch operation excessively noisy ▪ Air conditioning compressor internal failure ▪ Thermostatic expansion valve internal failure ▪ Refrigerant undercharged ▪ Refrigerant overcharged ▪ Air conditioning pipe(s) fouling body	

PINPOINT TESTS

CAUTION:

When charging the system with nitrogen, the pressure should be regulated to 7.0 bar.

NOTE:

This test is performed with the engine **not** running.

PINPOINT TEST A : LEAK TESTS	
TEST CONDITIONS	DETAILS/RESULTS/ACTIONS
A1: LEAK TEST 1	
	1 Charge the air conditioning system with nitrogen
	2 Isolate the nitrogen supply

PINPOINT TEST A : LEAK TESTS	
	3 Monitor the pressure gauge and check for leaks for 30 minutes
	Has the source of the leak been identified? **Yes** Rectify the leak as necessary. Install a new receiver drier. Using the manufacturer approved equipment, evacuate and recharge the air conditioning system with the correct quantity of refrigerant and oil **No** GO to A2.
A2: LEAK TEST 2	
	1 Using the manufacturer approved equipment, evacuate and recharge the air conditioning system with the correct quantity of refrigerant and oil
	2 Using the manufacturer approved refrigerant leak detector, check for a refrigerant leak
	Was a refrigerant leak detected? **Yes** Using the manufacturer approved equipment, recover the refrigerant. Repair the leak as necessary. Evacuate and recharge the air conditioning system with the correct quantity of refrigerant and oil **No** Repair complete

PINPOINT TEST B : LOW AND HIGH PRESSURE SYSTEM PRESSURES TOO LOW TESTS	
TEST CONDITIONS	DETAILS/RESULTS/ACTIONS
B1: LOW AND HIGH PRESSURE SYSTEM PRESSURES TOO LOW TEST 1	
	1 Stop the engine
	2 Using the manufacturer approved refrigerant leak detector, check for a refrigerant leak
	Was a refrigerant leak detected? **Yes** Using the manufacturer approved equipment, recover the refrigerant. Repair the leak as necessary. Evacuate and recharge the air conditioning system with the correct quantity of refrigerant and oil **No**

PINPOINT TEST B : LOW AND HIGH PRESSURE SYSTEM PRESSURES TOO LOW TESTS	
	GO to B2.
B2: LOW AND HIGH PRESSURE SYSTEM PRESSURES TOO LOW TEST 2	
	1 Using the manufacturer approved equipment, recover the refrigerant
	2 Compare the weight of recovered refrigerant to that specified for the vehicle
	Was the weight of the recovered refrigerant less than specified for the air conditioning system? **Yes** Using the manufacturer approved equipment, evacuate and recharge the air conditioning system with the correct quantity of refrigerant and oil **No** Check the low pressure pipes for external damage and restrictions. Repair as necessary

PINPOINT TEST C : COMPRESSOR MECHANICAL TESTS	
TEST CONDITIONS	DETAILS/RESULTS/ACTIONS
C1: COMPRESSOR MECHANICAL TEST 1	
	1 Remove the primary drive belt
	2 Rotate the air conditioning compressor shaft by hand and check for smooth rotation
	Does the air conditioning compressor shaft rotate smoothly? **Yes** Tests inconclusive **No** Install a new air conditioning compressor

PINPOINT TEST D : LOW AND HIGH PRESSURE SYSTEM PRESSURES UNSTABLE TESTS	
TEST CONDITIONS	DETAILS/RESULTS/ACTIONS
D1: LOW AND HIGH PRESSURE SYSTEM PRESSURES UNSTABLE TEST 1	
	1 Start the engine

PINPOINT TEST D : LOW AND HIGH PRESSURE SYSTEM PRESSURES UNSTABLE TESTS	
	2 Set the air conditioning to on
	3 Check the pressure gauge readings
	4 Set the air conditioning to off
	5 Check the pressure gauge readings
	Do the pressure gauge readings equalise immediately when the air conditioning is set to off? **Yes** Air conditioning compressor internal failure. Install a new air conditioning compressor **No** Air or moisture present in the air conditioning system. Using the manufacturer approved equipment, recover the refrigerant. Install a new receiver drier. Evacuate and recharge the air conditioning system with the correct quantity of refrigerant and oil

PINPOINT TEST E : LOW AND HIGH PRESSURE SYSTEM PRESSURES TOO HIGH TESTS	
TEST CONDITIONS	DETAILS/RESULTS/ACTIONS
E1: LOW AND HIGH PRESSURE SYSTEM PRESSURES TOO HIGH TEST 1	
	1 Start the engine
	2 Set the air conditioning to on
	3 Check the operation of the electric cooling fan
	Is the electric cooling fan operating? **Yes** GO to E2. **No** Check for foreign objects jamming the electric cooling fan. Refer to the electrical circuit diagrams and check the electric cooling fan circuit for short circuit to ground, short circuit to power, open circuit, high resistance
E2: LOW AND HIGH PRESSURE SYSTEM PRESSURES TOO HIGH TEST 2	
	1 Stop the engine
	2 Check the air conditioning condenser for external obstructions

PINPOINT TEST E : LOW AND HIGH PRESSURE SYSTEM PRESSURES TOO HIGH TESTS	
	Are any external obstructions present? **Yes** Repair as necessary **No** GO to E3.
E3: LOW AND HIGH PRESSURE SYSTEM PRESSURES TOO HIGH TEST 3	
	1 Start the engine
	2 Set the air conditioning to on
	3 Check the pressure gauge readings
	4 Set the air conditioning to off
	5 Check the pressure gauge readings
	Do the pressure gauge readings equalise immediately when the air conditioning is set to off? **Yes** Air conditioning compressor internal failure. Install a new air conditioning compressor **No** GO to E4.
E4: LOW AND HIGH PRESSURE SYSTEM PRESSURES TOO HIGH TEST 4	
	1 Stop the engine
	2 Using the manufacturer approved equipment, recover the refrigerant
	3 Compare the weight of recovered refrigerant to that specified for the vehicle
	Was the weight of the recovered refrigerant greater than specified for the air conditioning system? **Yes** Using the manufacturer approved equipment, evacuate and recharge the air conditioning system with the correct quantity of refrigerant and oil **No** Thermostatic expansion valve internal failure. Install a new thermostatic expansion valve

PINPOINT TEST F : ELECTRONIC CONTROL VALVE TESTS	
TEST CONDITIONS	**DETAILS/RESULTS/ACTIONS**

PINPOINT TEST F : ELECTRONIC CONTROL VALVE TESTS	
F1: ELECTRONIC CONTROL VALVE TEST 1	
	1 Start the engine
	2 Set the air conditioning to on
	3 Set the temperature to the lowest setting (all zones)
	4 Set the blower speed to maximum
	5 Set the recirculate switch to off
	6 Using the manufacturer approved diagnostic system, check datalogger signal - Compressor/Motor Current (0x99AB)
	Is the datalogger signal value > 0.5A? **Yes** Air conditioning compressor electronic control valve internal failure. Refer to the electrical circuit diagrams and install a new air conditioning compressor electronic control valve **No** Refer to the electrical circuit diagrams and check the air conditioning compressor electronic control valve circuit for short circuit to ground, short circuit to power, open circuit, high resistance. Repair as necessary and retest

PINPOINT TEST G : AIR CONDITIONING SYSTEM NOISE TESTS	
TEST CONDITIONS	DETAILS/RESULTS/ACTIONS
G1: AIR CONDITIONING SYSTEM NOISE TEST 1	
	1 Reproduce the reported air conditioning system noise
	Is the noise present only when setting the air conditioning system to on? **Yes** GO to G3. **No** GO to G2.
G2: AIR CONDITIONING SYSTEM NOISE TEST 2	
	1 Reproduce the reported air conditioning system noise
	Is the noise present only when the air conditioning system to operating? **Yes** GO to G4.

PINPOINT TEST G : AIR CONDITIONING SYSTEM NOISE TESTS	
	No GO to G7.
G3: AIR CONDITIONING SYSTEM NOISE TEST 3	
	1 Set the air conditioning on and off repeatedly and check the noise made by the air conditioning compressor clutch
	Is the noise made by the air conditioning compressor clutch excessively loud (compare to another similar vehicle for reference)? **Yes** Refer to the relevant section of the workshop manual and install a new air conditioning compressor **No** No further action
G4: AIR CONDITIONING SYSTEM NOISE TEST 4	
	1 Check the installation of the air conditioning pipes: ▪ Check that all brackets are present and secure ▪ Check for foul conditions
	Is the noise caused by a problem with the air conditioning pipe installation? **Yes** Rectify as necessary. Re-test the system **No** GO to G5.
G5: AIR CONDITIONING SYSTEM NOISE TEST 5	
	1 Set the air conditioning to on and check assess the duration of the noise
	Does the noise occur for a short period immediately after setting the air conditioning to on? **Yes** Refer to the relevant section of the workshop manual and install a new thermostatic expansion valve. Re-test the system **No** GO to G6.
G6: AIR CONDITIONING SYSTEM NOISE TEST 6	
	1 Using the manufacturer approved equipment, recover the refrigerant

PINPOINT TEST G : AIR CONDITIONING SYSTEM NOISE TESTS	
	Was the weight of the recovered refrigerant different than specified for the air conditioning system? **Yes** Using the manufacturer approved equipment, evacuate and recharge the air conditioning system with the correct quantity of refrigerant and oil **No** GO to Pinpoint Test **C.**
G7: AIR CONDITIONING SYSTEM NOISE TEST 7	
	1 Assess the source of the noise
	Is the noise caused by the air conditioning compressor (bearing, contact between rotating and fixed components)? **Yes** Refer to the relevant section of the workshop manual and install a new air conditioning compressor **No** No further action

DTC INDEX

For a list of Diagnostic Trouble Codes (DTCs) that could be logged on this vehicle, please refer to Section 100-00. REFER to: (100-00 General Information)

Diagnostic Trouble Code (DTC) Index - DTC: Module Name: Climate Control Module (Description and Operation),
Diagnostic Trouble Code (DTC) Index - DTC: Module Name: Rear Climate Control Module (Description and Operation).

CLIMATE CONTROL SYSTEM - GENERAL INFORMATION

AIR CONDITIONING (A/C) SYSTEM RECOVERY, EVACUATION AND CHARGING - V8 5.0L PETROL/V8 S/C 5.0L PETROL (G1345063)

GENERAL PROCEDURES

82.30.02	AIR CONDITIONING SYSTEM - DEPRESSURISE - EVACUATE - CAPTURE AND RECHARGE	5000 CC, AJ V8	0.5	USED WITHINS

1. **WARNING:**

Servicing must be carried out by personnel familliar with both vehicle system and the charging and testing equipment. All operations must be carried out in a well ventilated area away from open flame and heat sources.

Refrigerant recovery.

2. **NOTE:**

> Some variation in the illustrations may occur, but the essential information is always correct.

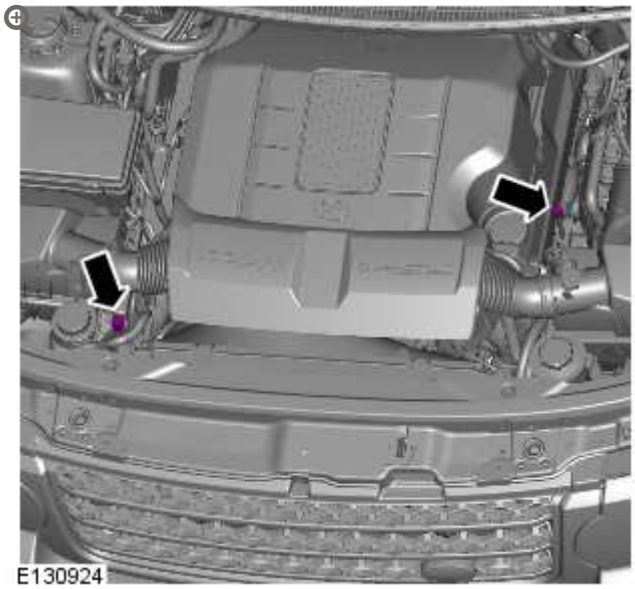

Remove the dust covers from the high and low pressure connections.

3. Connect the high and low pressure lines to the appropriate connections.

4.

WARNING:

Refrigerant must always be recycled before re-use to ensure that the purity of the refrigerant is high enough for safe use in the air conditioning system. Recycling should always be carried out with equipment which is design certified for compliance with SAE J2099 and SAE J2788. Other equipment may not recycle refrigerant to the required level of purity. R-134a Refrigerant Recover Recycling Recharging station must not be used with any other type of refrigerant. Refrigerant R-134a from domestic and comercial sources must not be used in motor vehicles air conditioning systems.

Following the manufacturer's instructions, recover the refrigerant from the A/C system.

- Measure and record the quantity of refrigerant oil recovered from the system.

5.

CAUTIONS:

- Make sure that all openings are sealed. Use new blanking caps.
- Always follow the health and safety precautions when handling the refrigerant R-134a.
- Collect the refrigerant in specialist equipment and reuse.

Disconnect the high and low pressure connections.

6. Evacuation.

7. Connect the high and low pressure lines to the appropriate connections.

8. Following the manufacturer's instructions, evacuate the A/C system.

9. **NOTE:**

> The receiver drier need only be changed under the following circumstances: There is dirt in the refrigerant circuit (eg. compressor seizure), the system is leaking and refrigerant has been lost to atmosphere, or the refrigerant circuit has been open more than 24 hours, due to repair.

For additional information, refer to: Receiver Drier - 5.0L NA V8 - AJ133 (412-03A, Removal and Installation) / Receiver Drier - 5.0L SC V8 - AJ133 (412-03A, Removal and Installation).

10. **CAUTION:**

> The system must be evacuated immediatley before recharging commences. Delay between evacuation and recharging is not permitted

Recharging

11. Ensure the correct amount of oil is added to the A/C system before or during recharging.

12.

Recharge the A/C system to the correct specification.
For additional information, refer to: Specifications - 3.6L V8 - TdV8/5.0L NA V8 - AJ133/5.0L SC V8 - AJ133 (412-00, Specifications).

13. Disconnect the high and low pressure connections.

14. **NOTE:**

> Some variation in the illustrations may occur, but the essential information is always correct.

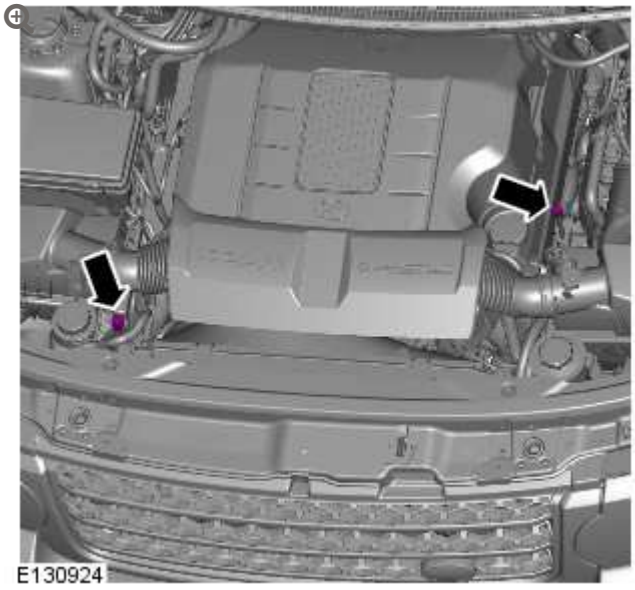

Install and firmly tighten the caps that cover the high and low pressure connections.

AIR DISTRIBUTION AND FILTERING

SPECIFICATIONS

Torque Specification

DESCRIPTION	NM	LB-FT
Plenum chamber nuts	10	7
Battery positive cable to bulkhead	20	15

2012.0 RANGE ROVER (LM), 412-01

AIR DISTRIBUTION AND FILTERING

DIAGNOSIS AND TESTING

For additional information.

REFER to: Climate Control System (412-00, Diagnosis and Testing).

2012.0 RANGE ROVER (LM), 412-01

AIR DISTRIBUTION AND FILTERING

DESCRIPTION AND OPERATION

COMPONENT LOCATION

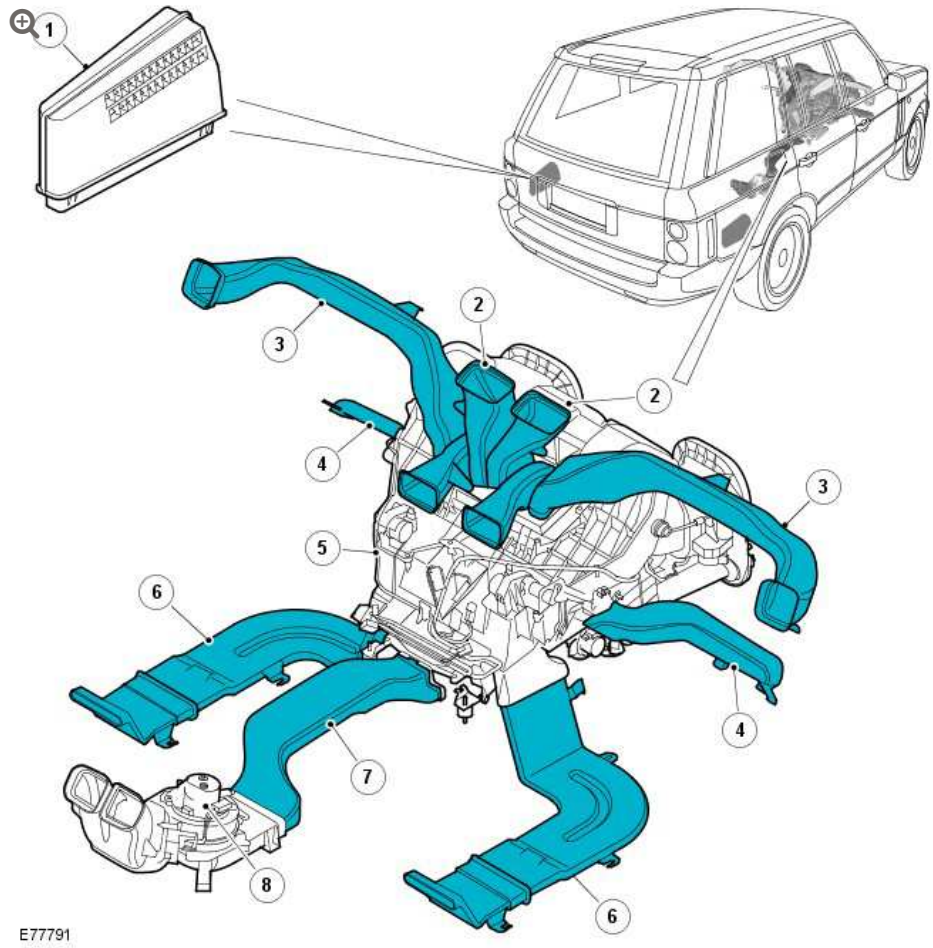

ITEM	DESCRIPTION
1	Forced ventilation outlet

ITEM	DESCRIPTION
2	Windshield duct
3	Face level duct
4	Front footwell duct
5	Heater assembly
6	Rear footwell duct
7	Rear face duct
8	Rear blower

GENERAL

The air distribution and filtering system controls the distribution and quality of air supplied to the vehicle interior. The system consists of:

- Air ducts.
- Air registers and vents.
- A cabin air filter.

AIR DUCTS

Air from the heater assembly is distributed around the vehicle interior through distribution ducts to outlets in the instrument panel, the front and rear footwells, and the rear of the cubby box between the front seats.

Air Distribution

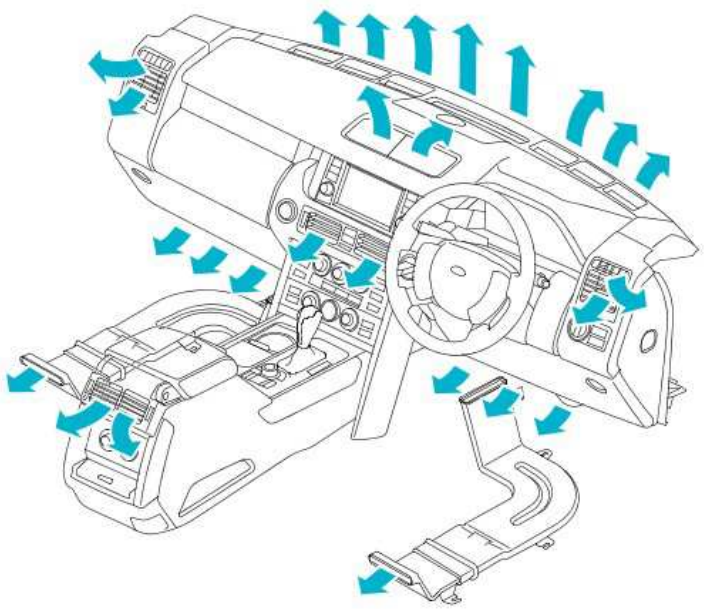

E77792

AIR REGISTERS AND VENTS

In the instrument panel, the air ducts are connected to fixed vents for the windshield and side windows and adjustable registers for face level air. An adjustable register is also installed on the rear of the cubby box for rear face level air. The footwell outlets are fixed vents formed in the end of the related air ducts.

CABIN AIR FILTER

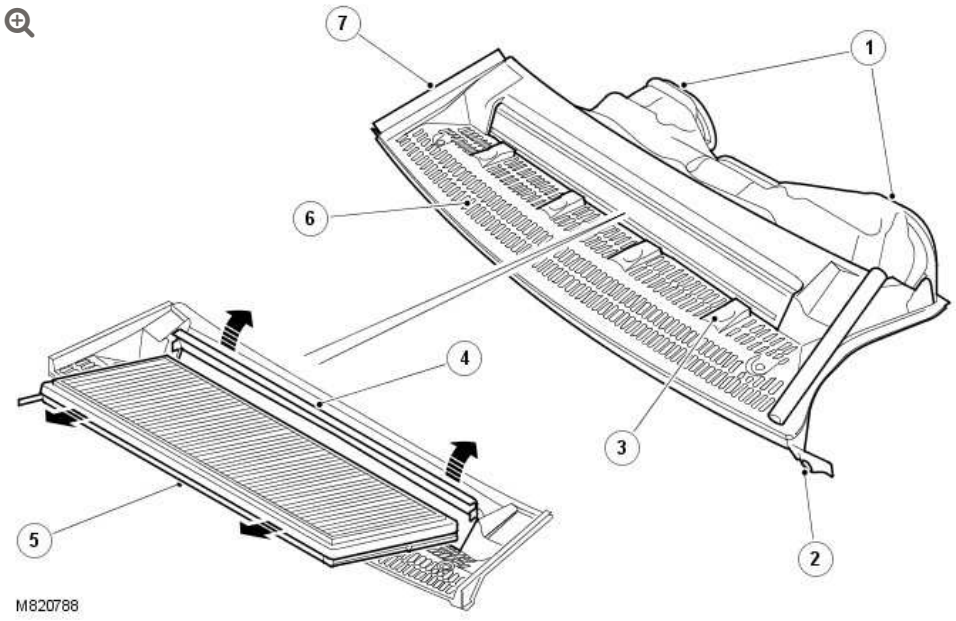

ITEM	DESCRIPTION
1	Air outlet to heater assembly
2	Fixing lug
3	Door catch
4	Door
5	Particle or particle/odor filter
6	Inlet grille
7	Seal

The cabin air filter consists of a serviceable particle filter, or a particle/odor filter, which is installed in the air inlet duct. The cabin air filter prevents odors and/or particulate matter from entering the vehicle with the fresh air.

AIR DISTRIBUTION AND FILTERING

CENTER REGISTERS (G874130)

REMOVAL AND INSTALLATION

REMOVAL

1. **CAUTION:**

   Care must be taken to avoid damage to the internal components of the center registers.

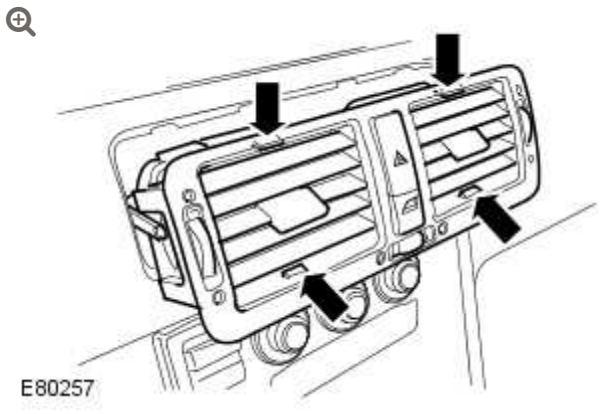

Release the center registers.

- Carefully release the 4 internal clips, apply an even outward pressure until the last clip is released.

2. 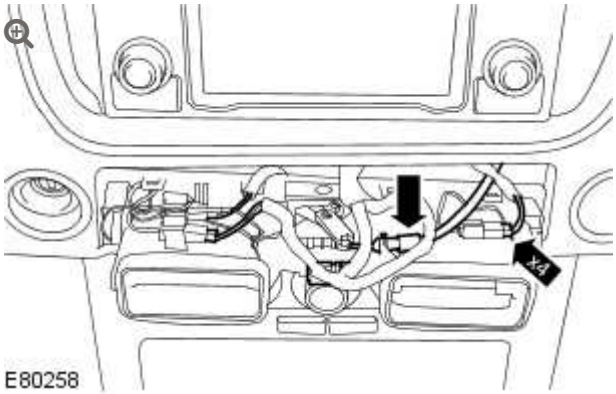

Remove the center registers.

- Disconnect the 4 electrical connectors.
- Release the temperature blend door control cable.

3. **NOTE:**

Do not disassemble further if the component is removed for access only.

Remove the hazard flasher switch.

INSTALLATION

1. Install the hazard flasher switch.

2. Install the center registers.
   - Attach the temperature blend door control cable.
   - Connect the 4 electrical connectors.
   - Position and secure the clips.

AIR DISTRIBUTION AND FILTERING

DRIVER SIDE REGISTER

(G874116)

REMOVAL AND INSTALLATION

REMOVAL

1.

CAUTION:

Care must be taken to avoid damaging the driver side register internal components.

NOTE:

Left-hand shown, right-hand similar.

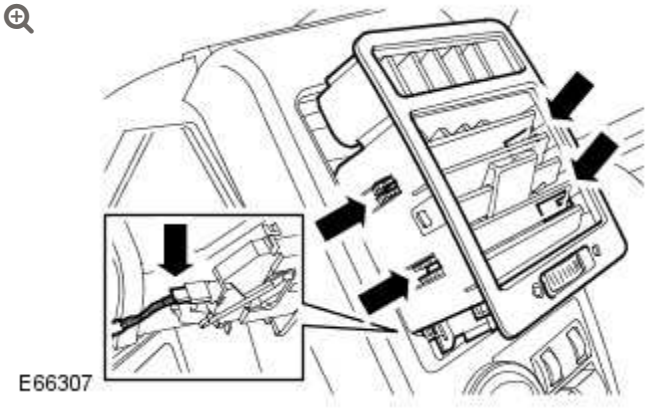

Remove the driver side register.

- Carefully release the 4 internal clips, apply an even outward pressure until the last clip is released.
- Disconnect the electrical connector.

INSTALLATION

1. Install the driver side register.
   - Connect the electrical connector.
   - Position and secure the clips.

AIR DISTRIBUTION AND FILTERING

DRIVER SIDE REGISTER TRIM PANEL (G874117)

REMOVAL AND INSTALLATION

76.46.12	TRIM PANEL - UPPER - DRIVERS'S SIDE - RENEW	ALL DERIVATIVES	0.2	USED WITHINS	+

REMOVAL

1.

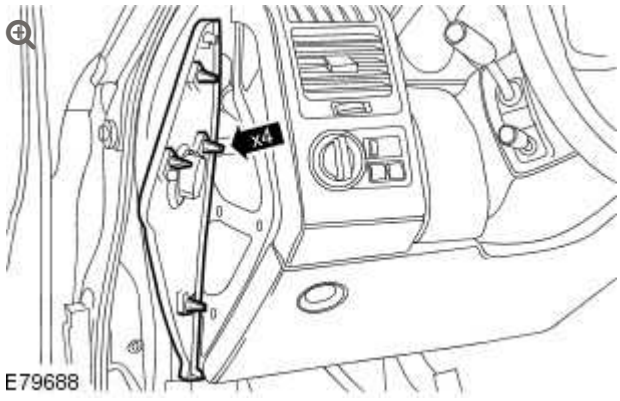

Remove the instrument panel end trim panel.

- Release sufficient door aperture seal for access.
- Carefully release the 4 clips.

2. Remove the driver's side register.
   For additional information, refer to: Driver Side Register (412-01, Removal and Installation).

3. 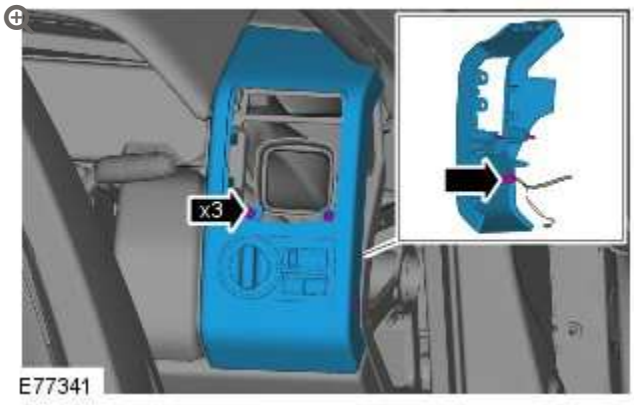

   Remove the driver side register trim panel.

   - Remove the 3 screws.
   - Disconnect the headlamp switch electrical connector.

4. **NOTE:**

   Do not disassemble further if the component is removed for access only.

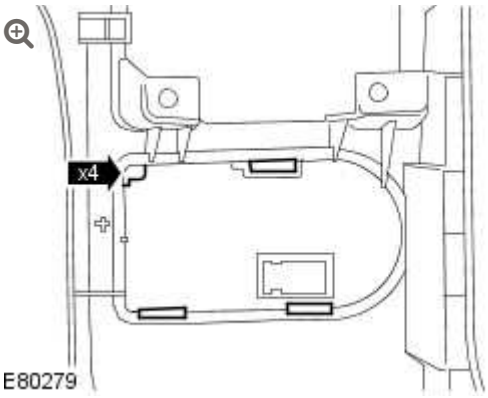

   Remove the headlamp switch.

   - Carefully release the 4 clips.

INSTALLATION

1. Install the headlamp switch.

2. Install the driver side register trim panel.
   - Connect the headlamp switch electrical connector.
   - Install the 3 screws.

3. Install the driver's side register.
   For additional information, refer to: Driver Side Register (412-01, Removal and Installation).

4. Install the instrument panel end trim panel.
   - Carefully align and secure the clips.
   - Install the aperture seal.

AIR DISTRIBUTION AND FILTERING

PASSENGER SIDE REGISTER (G874135)

REMOVAL AND INSTALLATION

REMOVAL

1.

CAUTION:

Care must be taken to avoid damaging the passenger side register internal components.

NOTE:

Left-hand shown, right-hand similar.

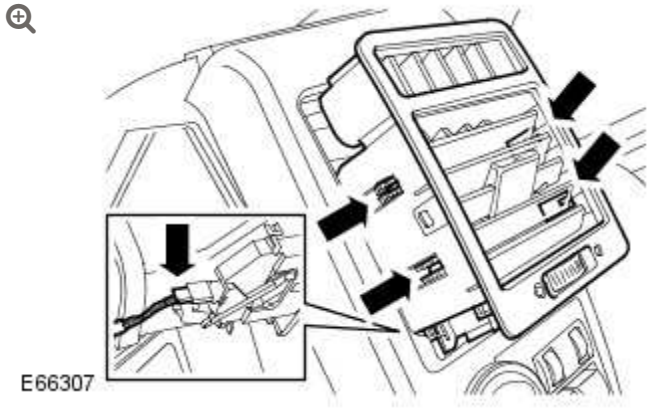

Remove the passenger side register.

- Carefully release the 4 internal clips, apply an even outward pressure until the last clip is released.
- Disconnect the electrical connector.

INSTALLATION

1. Install the passenger side register.
   - Connect the electrical connector.
   - Position and secure the clips.

AIR DISTRIBUTION AND FILTERING

PASSENGER SIDE REGISTER TRIM PANEL

(G874118)

REMOVAL AND INSTALLATION

76.46.13	TRIM PANEL - UPPER - PASSENGER'S SIDE - RENEW	ALL DERIVATIVES	0.2	USED WITHINS	+

REMOVAL

WARNINGS:

- Persons working on the supplemental restraint system (SRS) must be fully trained and have been issued with the safety guidelines.
- Allow a period of 10 minutes to elapse after disconnecting the battery before undertaking any work on the SRS.
- The SRS electrical connectors are unique. DO NOT force, or attempt to connect electrical connectors to the wrong sockets.
- The correct procedures must always be used when working on SRS components.
- It is imperative that before any work is undertaken on the SRS system, the appropriate information is read thoroughly.
- Always disconnect both battery cables before beginning work on the SRS system. Disconnect the ground cable first. Never reverse connect the battery.
- Take extra care when handling SRS components.

1. Make the air bag supplemental restraint system (SRS) safe.
   For additional information, refer to: Standard Workshop Practices (100-00, Description and Operation).

2. Disconnect the battery ground cable.
   For additional information, refer to: Specifications (414-00, Specifications).

3.

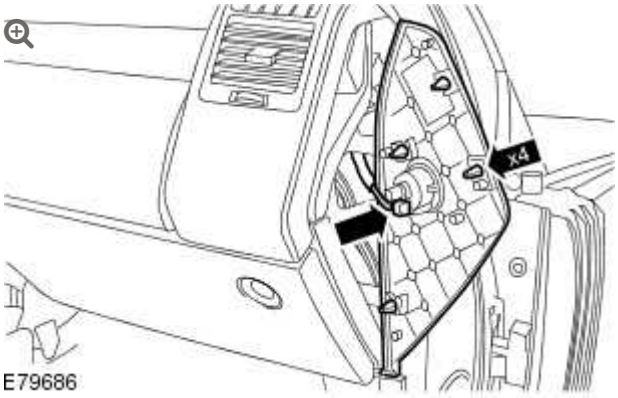

Remove the instrument panel end trim panel.

- Release sufficient door aperture seal for access.
- Carefully release the 4 clips.
- Disconnect the electrical connector from the passenger air bag deactivation switch.

4. Remove the passenger side register.
   For additional information, refer to: Passenger Side Register (412-01, Removal and Installation).

5. 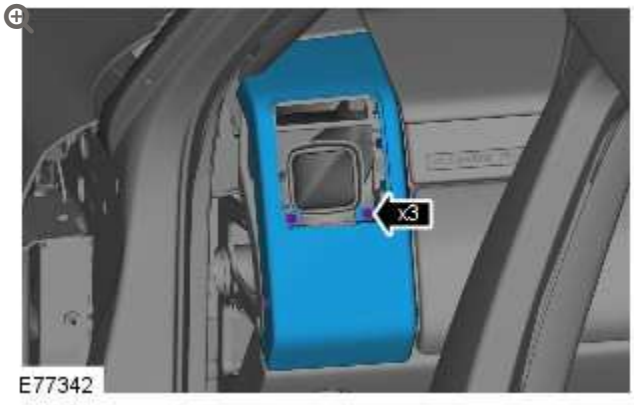

Remove the passenger side register trim panel.

- Remove the 3 screws.

INSTALLATION

1. Install the passenger side register trim panel.
    - Install the 3 screws.

2. Install the passenger side register.
   For additional information, refer to: Passenger Side Register (412-01, Removal and Installation).

3. Install the instrument panel end trim panel.
    - Connect the passenger air bag deactivation switch electrical connector.
    - Carefully align and secure the clips.
    - Install the aperture seal.

4. Connect the battery ground cable.
   For additional information, refer to: Specifications (414-00, Specifications).

AIR DISTRIBUTION AND FILTERING

PLENUM CHAMBER (G852137)

REMOVAL AND INSTALLATION

80.15.62	PLENUM – AIR INTAKE – RENEW	ALL DERIVATIVES	0.2	USED WITHINS	+

REMOVAL

1. Secure the hood in the service position.
   - Release the support struts.

2. Disconnect the battery ground cable.
   For additional information, refer to: Specifications (414-00, Specifications).

3.

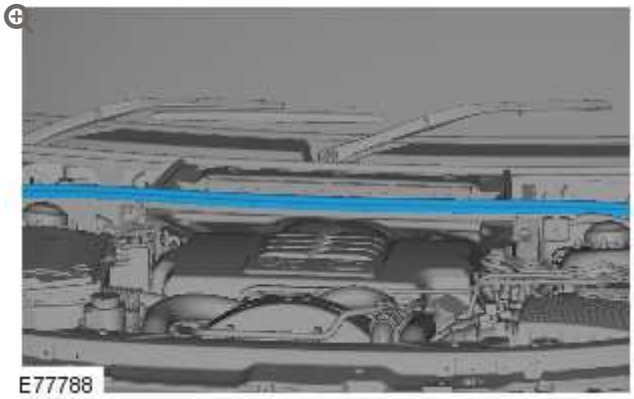

Remove the hood seal from the plenum chamber.

4.

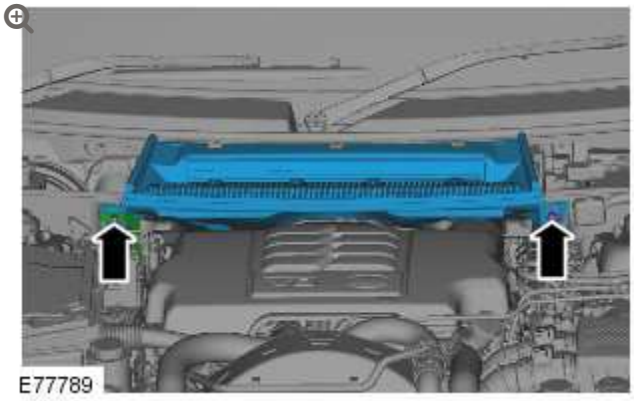

Remove the plenum chamber.

- Remove the 2 nuts.
- Vehicles with diesel engine only: Release the air conditioning (A/C) line bracket.

5.

NOTE:

Do not disassemble further if the component is removed for access only.

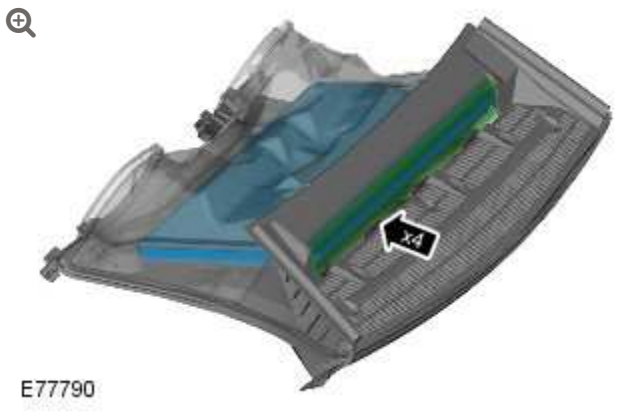

Remove the pollen filter.

- Release the 4 clips.
- Release the pollen filter housing cover.

INSTALLATION

1. Install the pollen filter.
   - Secure the pollen filter housing cover.
2. **NOTE:**

   Make sure that the air inlet seals are fully seated before installation.

   Install the plenum chamber.
   - Vehicles with diesel engine only: Attach the A/C line bracket.
   - Tighten the nuts to 10 Nm (7 lb.ft).
3. Install the hood seal.
4.

Connect the battery ground cable.

For additional information, refer to: Specifications (414-00, Specifications).

5. Connect the hood support struts.

AIR DISTRIBUTION AND FILTERING

UPPER CENTER REGISTERS (G909487)

REMOVAL AND INSTALLATION

REMOVAL

1. **NOTE:**

   Take extra care when releasing the clips.

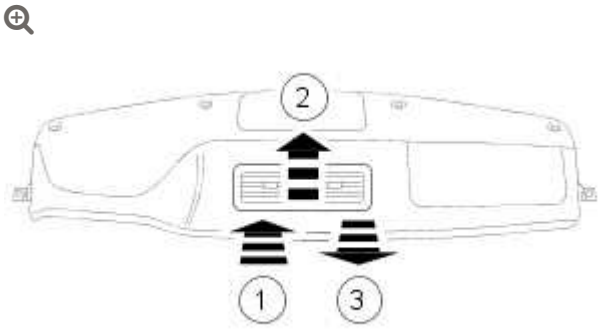

E81597

Remove the upper center registers.

1. Reposition the upper center registers towards the instrument panel.
2. Release the 3 front clips.

3. Release the 2 rear clips.

INSTALLATION

1. Install the upper center registers.
    - Secure the 5 clips.

2012.0 RANGE ROVER (LM), 412-01

CLIMATE CONTROL

DESCRIPTION AND OPERATION

COMPONENT LOCATION

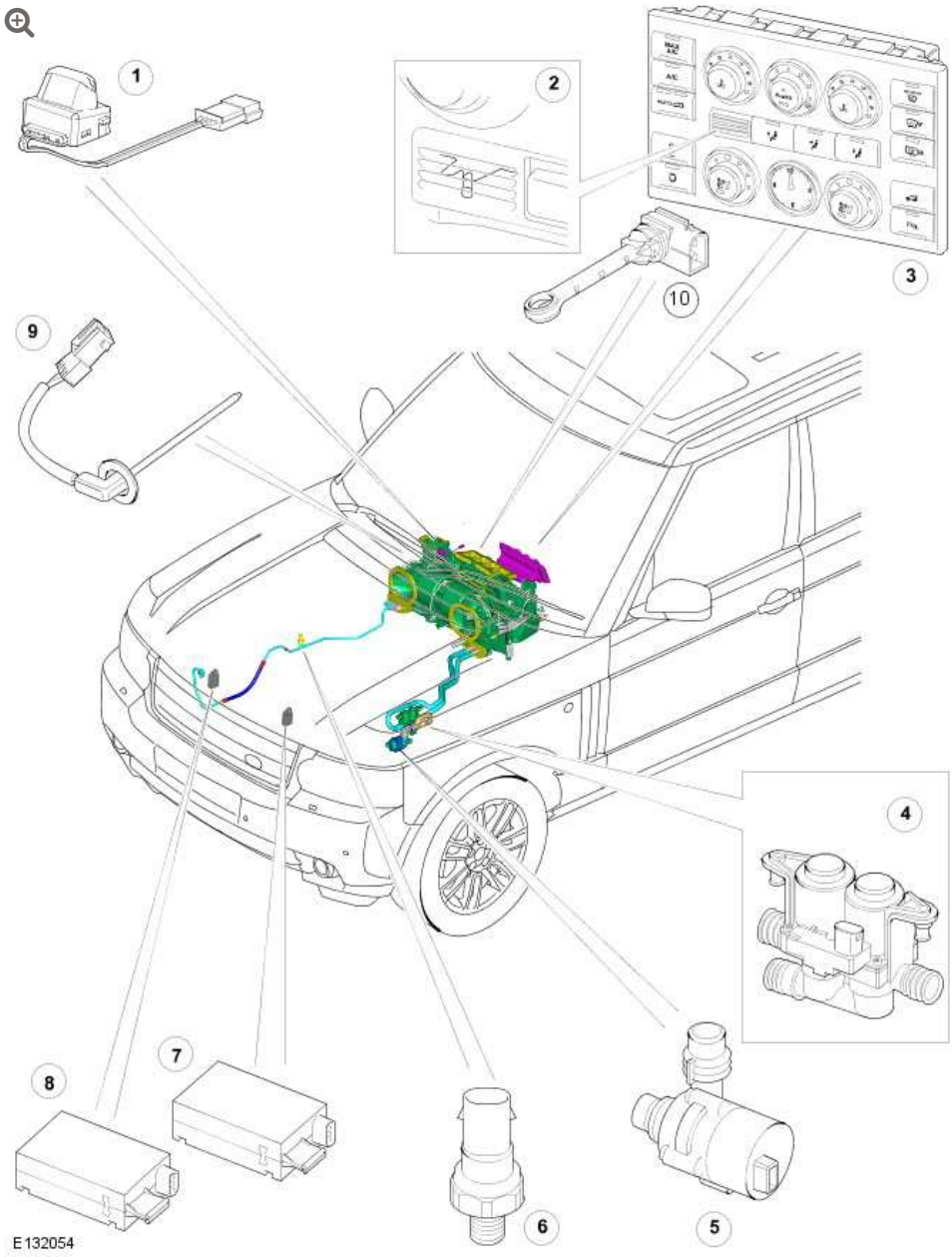

ITEM	DESCRIPTION
1	Sunlight sensor
2	In-vehicle temperature sensor
3	automatic temperature control (ATC) module
4	Coolant valve
5	Auxiliary coolant pump
6	Refrigerant pressure sensor

ITEM	DESCRIPTION
7	Pollution sensor - TdV8
8	Pollution sensor - 5.0L petrol
9	Evaporator temperature sensor
10	Heater temperature sensor

OVERVIEW

The air conditioning (A/C) control system automatically adjusts the temperature, volume and distribution of the air from the heater to maintain the individual temperature levels selected for the left-hand (LH) and right-hand (RH) sides of the cabin. The system also has manual overrides for the intake air source, blower speed and air distribution.

Some vehicles may be fitted with a 4 zone climate control system.

ATC MODULE

The ATC module is installed in the center of the instrument panel. An integral control panel contains push switches and rotary switches/knobs for system control inputs. Orange tell-tale light emitting diode (LED)s in the switches and switch surrounds illuminate to indicate the current settings of the system. The rotary temperature switch is graduated in degrees Celsius, except on USA vehicles, where it is graduated in degrees Fahrenheit.

An in-vehicle temperature sensor and associated electric fan are installed behind a grille in the control panel.

The ATC module processes inputs from the control panel switches and system sensors, then outputs the appropriate signals to control the A/C system. In addition to controlling the A/C system, the ATC module also controls the following:

- The heated windshield and windshield wiper parking area heater (optional fit, not available on vehicles with infra red protection glass).
- The windshield washer jet heaters.
- The heated rear window.
- The front seat heaters.

NOTE:

Operation of the climatic seats is controlled by rotary knobs on the ATC module. For further information, refer to the 'Climatic Seats' information later in this section.

CONTROL PANEL

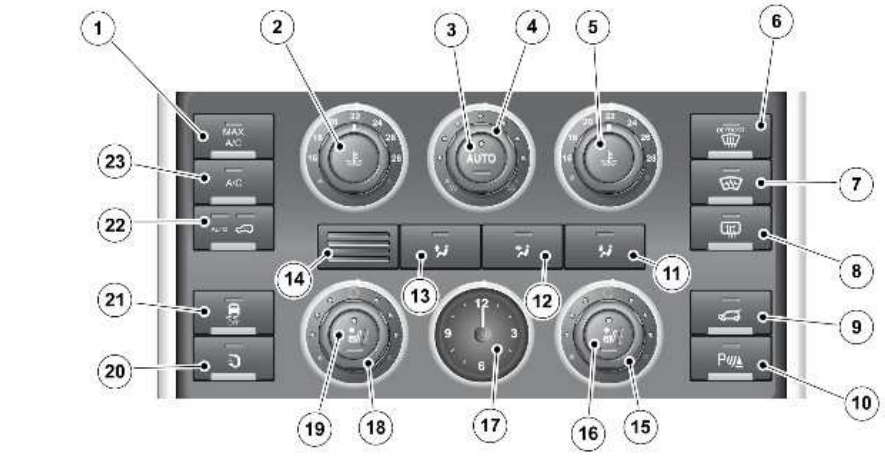

E132065

ITEM	DESCRIPTION
1	Maximum A/C switch
2	LH temperature switch
3	Automatic mode switch
4	Blower switch

ITEM	DESCRIPTION
5	RH temperature switch
6	Defrost program switch
7	Heated front screen switch
8	Heated rear window switch
9	Tailgate release button
10	PDC (Park Distance Control) switch
11	Footwell distribution switch
12	Face distribution switch
13	Windshield distribution switch
14	In-vehicle temperature sensor
15	RH temperature switch
16	RH Climatic front seat switch
17	Clock
18	LH temperature switch
19	LH Climatic front seat switch
20	Rear system on/off switch
21	DSC (Dynamic Stability Control) switch
22	Air recirculation switch
23	A/C control switch

The switches on the control panel have the following functions:

Heated Windshield Switch

Energizes the heated windshield and the windshield wiper parking area heater for a set time period, until the switch is pressed again or until the engine stops, whichever occurs first. A LED above the switch is illuminated while the heaters are on.

LH and RH Seat Heater Switches

Activates the heater elements in the seat cushion and seat back at one of two heat levels. The first press of the switch energizes the heater elements at the higher heat setting and illuminates two LEDs in the switch. A second press of the switch sets the heater elements to the lower heat setting and extinguishes one of the LEDs. A further press of the switch de-energizes the heater elements and extinguishes the second LED. The seat heaters remain on until selected off or the ignition is switched off.

Enabled only with the engine running.

LH and RH Temperature Switches

Adjusts the nominal temperature settings of the LH and RH sides of the cabin between 16 and 28 °C (60 and 84 °F). The temperature range is engraved on the switch surrounds. A pointer on each switch indicates the selected temperature. In the minimum and maximum temperature positions, the system operates at maximum cooling or maximum heating respectively.

Automatic Mode Switch

Activates the automatic modes for air volume and distribution and also activates the A/C compressor. Separate LEDs in the automatic mode switch illuminate when the blower and the distribution control doors are in automatic mode. Manually selecting the blower speed or a distribution switch extinguishes the related LED.

Blower Switch

For manual adjustment of blower speed. Up to seven LEDs in the switch surround illuminate to indicate the selected blower speed.

In automatic mode the LED (light emitting diode) does not illuminate.

A/C Switch

Controls activation of the A/C compressor. Allows the A/C compressor to be selected off for economy operation. A LED above the switch is illuminated when the A/C compressor is selected on.

Recirculation Switch

For manual or automatic selection of fresh or recirculated air. Two LEDs above the switch illuminate to indicate the mode and position of the recirculation doors. The first press of the switch sets the recirculation doors to automatic mode and illuminates the LHLED. A second press of the switch manually sets the recirculation doors to the recirculation position, extinguishes the LHLED and illuminates the RHLED. A further press of the switch manually sets the recirculation doors to the fresh air position and extinguishes the RHLED.

Maximum A/C Switch

For selection of maximum A/C when the ignition is on or rest heating when the ignition is off. A LED above the switch is illuminated when maximum cooling or rest heating is selected.

Distribution Switches (Windshield, Face and Footwell)

For manual selection of air distribution in any combination of windshield, face and footwell outlets. A LED above each switch illuminates when a selection is made.

Defrost Program Switch

Activates a program that automatically selects the heated windshield on, activates the A/C compressor and changes the system settings to direct dry heat to the windshield. A LED above the switch is illuminated while the defrost program is active.

Heated Rear Window Switch and Heated Front Screen

Enabled only with the engine running. Pressing the switch energizes the heated rear window for a set time period based on ambient temperature (i.e. stays on longer in cold ambient temperature), until the switch is pressed again or until the engine stops, whichever occurs first. A LED above the switch is illuminated while the heater is on.

INPUTS AND OUTPUTS

Five electrical connectors provide the interface between the ATC module and the vehicle/heater assembly wiring.

The ATC (automatic temperature control) receives all information from EMS via BCM. If the signal is CAN (controller area network) based and it has an associated QF (Quality Factor), then this is what will be stored in RAM (random access memory), so that it will be possible to log via CCP. If the signal is CAN based and lacking a QF, or if the signal is hardwired, then the HVAC s/w must determine the applicable QF value and report this via diagnostics or CCP when requested.

If a fault develops and QF = 0 at start up, then the evaporator sensor signal is used until QF >= 2.

If evaporator temperature sensor is faulty, then a default of 10°C will be used until either sensor QF >= 2.

If ambient temperature sensor QF >= 2 at start up, then during session QF drops to < 2, then the last known "good" value will be used until QF >= 2 again.

IN-VEHICLE TEMPERATURE SENSOR

The in-vehicle temperature sensor is an encapsulated negative temperature coefficient (NTC) thermistor that provides the ATC module with an input of cabin air temperature. The in-vehicle temperature sensor is installed behind a grille in the ATC module

control panel. An electric fan in the ATC module runs, to draw air through the grille and across the in-vehicle temperature sensor based on:

If MSCAN-Bus inactiv/active then

- Fan on for 300sec, then switch off.

If Power mode changes to 4, then

- Fan on for 300sec then fan off.

If Power mode changes to 6 and HVAC on, then

- Fan is on.

If Power mode changes to 6 and HVAC off, then

- Fan on for 15sec, then fan off.

If fan off, then fan requested to be on, then

- Wait x sec before fan on.

If Power mode 7, then:

- Fan on regardless of HVAC on/off status.

Fan is not disabled during crank (Power mode 9)

The ATC module uses the signal from the in-vehicle temperature sensor for control of the coolant temperature valve(s), blower speed and air distribution.

The signal voltage from the in-vehicle temperature sensor is between 0 and 5 V. The ATC module monitors the signal voltage and defaults to a temperature of 20 °C (68 °F) if it goes out of the range 0.4 - 4.8 V:

- If the signal voltage is less than 0.4 V, the ATC module assumes there is a short circuit to ground.
- If the signal voltage is more than 4.8 V, the ATC module assumes there is an open circuit or a short circuit to battery.

REFRIGERANT PRESSURE SENSOR

The refrigerant pressure sensor provides the ATC module with a pressure input from the high pressure side of the refrigerant system. The refrigerant pressure sensor is located in the refrigerant line between the condenser and the thermostatic expansion valve.

The ATC module supplies a 5 V reference voltage to the refrigerant pressure sensor and receives a return signal voltage, between 0 and 5 V, related to system pressure.

The ATC module uses the signal from the refrigerant pressure sensor to protect the system from extremes of pressure and to calculate A/C compressor load on the engine for idle speed control.

For further information, refer to the 'Compressor Control' information later in this section.

EVAPORATOR TEMPERATURE SENSOR

The evaporator temperature sensor is a NTC thermistor that provides the ATC module with a temperature signal from the air outlet side of the evaporator. The evaporator temperature sensor is installed in the RH side of the heater assembly casing, and extends into the core of the evaporator.

The ATC module uses the input from the evaporator temperature sensor to control the engagement and disengagement of the A/C

compressor clutch, to prevent the formation of ice on the evaporator.

The signal voltage from the evaporator temperature sensor is between 0 and 5 V. The ATC module monitors the signal voltage and defaults to a temperature of 0 °C (32 °F) if it goes out of the range 0.157 - 4.784 V:

- If the signal voltage is less than 0.157 V, the ATC module assumes there is a short circuit to ground.
- If the signal voltage is more than 4.784 V, the ATC module assumes there is an open circuit or a short circuit to battery.

HEATER TEMPERATURE SENSOR

The heater temperature sensor is a NTC thermistor that provides the ATC module with a temperature signal from the air outlet side of the heater core. Two sensors are installed, one each side of the vehicle center-line.

The ATC module uses the input from the heater temperature sensors to control the operation of the coolant valves.

The signal voltage from each heater temperature sensor is between 0 and 5 V. The ATC module monitors the signal voltage and defaults to a temperature of 55 °C (131 °F) if it goes out of the range 0.173 - 4.890 V:

- If the signal voltage is less than 0.173 V, the ATC module assumes there is a short circuit to ground
- If the signal voltage is more than 4.890 V, the ATC module assumes there is an open circuit or a short circuit to battery.

AUXILIARY COOLANT PUMP

The auxiliary coolant pump is an electric pump that ensures there is a satisfactory flow rate through the heater core at low engine speeds. The auxiliary coolant pump is installed in the engine compartment, in a rubber mounting attached to the side of the LH suspension turret. Operation of the auxiliary coolant pump is controlled by a power supply from the ATC module.

COOLANT VALVES

The coolant valves control the coolant flow to each side of the heater core. The coolant valves are installed in the engine compartment on a bracket attached to the side of the LH suspension turret.

Each coolant valve is a normally open solenoid valve controlled by a pulse width modulation (PWM) signal from the ATC module. The ATC module changes the length of time the coolant valve is open each duty cycle between 0 second (valve closed) and 3.6 seconds (valve held open). On the automatic system, the PWM signals to the two valves are phase offset by 1.8 seconds to reduce coolant flow fluctuations.

SUNLIGHT SENSOR

The sunlight sensor consists of two photoelectric cells that provide the ATC module with inputs of light intensity, one as sensed coming from the left of the vehicle and one as sensed coming from the right. The inputs are a measure of the solar heating effect on vehicle occupants and used by the ATC module to adjust blower speed, temperature and distribution to improve comfort. The sensor is installed in the center of the fascia upper surface.

If one of the photoelectric cells is faulty, the output from the other photoelectric cell is used for both sides of the vehicle. If both photoelectric cells are faulty, the ATC module uses a default value of zero.

POLLUTION SENSOR

The pollution sensor allows the ATC module to monitor the ambient air for the level of carbon monoxide (CO) and oxides of nitrogen (NOx). The pollution sensor is installed at the rear of the radiator, on the upper left side of the fan cowl.

The ATC module outputs a battery power supply to heat the pollution sensor to operating temperature, and a 5 V reference voltage for the signal. The signal voltage from the pollution sensor is between 0 and 5 V.

If there is a fault with the pollution sensor, the ATC module disables automatic closing of the recirculation doors on detection of pollutants.

CONTROL DIAGRAM - SHEET 1 OF 2

NOTE:

A = Hardwired; **B** = MSCAN; **L** = LIN bus

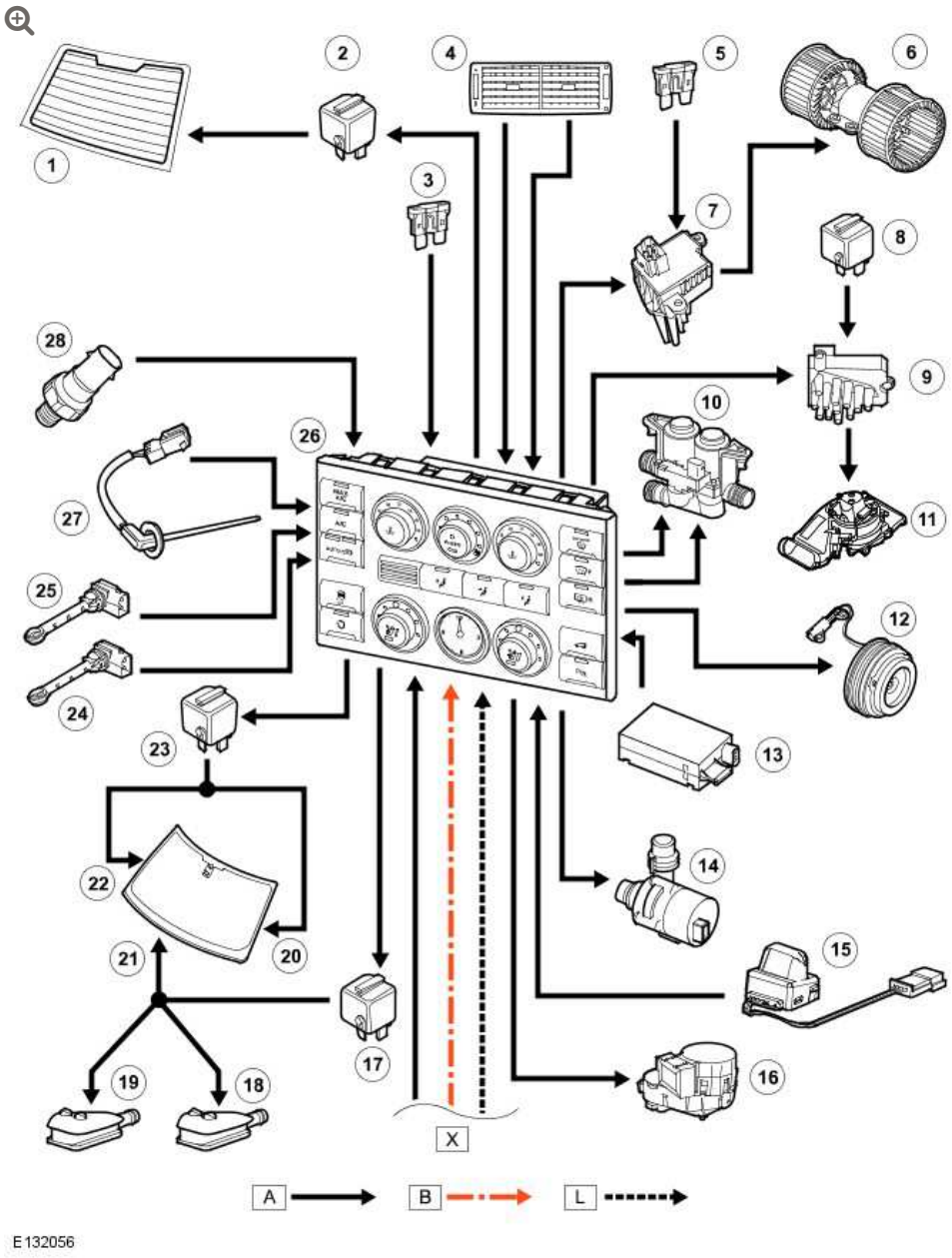

ITEM	DESCRIPTION
1	Heated rear window
2	Heated rear window relay
3	Fuse 12, central junction box (CJB)
4	Rear passenger face register
5	Fuse 64, CJB
6	Blower
7	Blower output stage

ITEM	DESCRIPTION
8	Rear blower relay
9	Rear blower output stage
10	Dual coolant valve
11	Rear blower
12	Compressor clutch only on 3.6L TDV8
13	Pollution sensor
14	Auxiliary coolant pump
15	Sunlight sensor
16	Fresh/Recirculated air doors motor
17	Washer jet heater relay
18	LH washer jet
19	RH washer jet
20	Heated windshield, LH heater element
21	Heated windshield, wiper park heater element
22	Heated windshield, RH heater element
23	Heated windshield relay
24	RH heater temperature sensor
25	LH heater temperature sensor
26	ATC module
27	Evaporator temperature sensor
28	Refrigerant pressure sensor

CONTROL DIAGRAM – SHEET 2 OF 2

NOTE:

A = Hardwired; **B** = K bus; **C** = Diagnostic DS2 bus; **D** = High speed controller area network (CAN) bus; **K** = I bus; **L** = M bus;

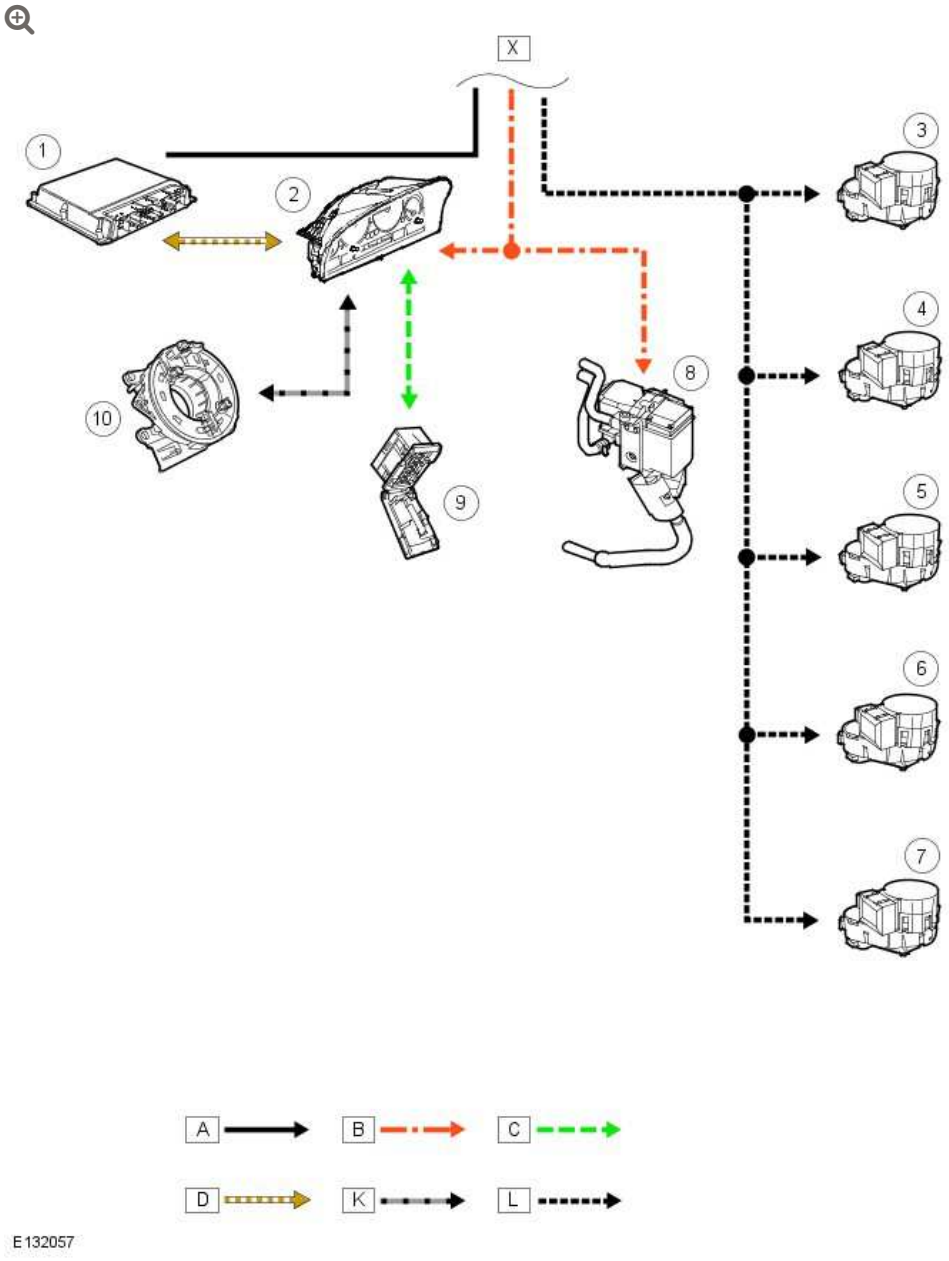

ITEM	DESCRIPTION
1	engine control module (ECM)
2	Instrument cluster

ITEM	DESCRIPTION
3	Windshield distribution motor
4	Face level distribution motor
5	Footwell distribution motor
6	Rear face level temperature blend motor
7	Ram air motor
8	Fuel fired booster heater
9	Diagnostic socket
10	Clockspring

PRINCIPLES OF OPERATION

The system operates on the reheat principle. Air entering the heater assembly is cooled to a constant value by the evaporator and then reheated as necessary by the heater core to produce the temperature(s) selected on the control panel.

To determine the various system settings, the ATC module derives a reference value (called the Y factor) from:

- The temperature setting on the control panel.
- The ambient temperature.
- The in-vehicle temperature.

The reference value is measured in %, where -27.5% means maximum cooling is required and 100% means maximum heating is required. Separate reference values are produced for the LH and RH sides of the heater assembly.

The reference value is used for temperature control. The driver's side reference value is also used for door positioning and blower speed calculations.

When the ignition is turned off the ATC module memorizes the system settings and resumes the same settings the next time the ignition is switched on.

A/C COMPRESSOR CONTROL

There are 2 types of compressor:

- Internally controlled, clutched compressor (3.6L TDV8)
- Externally controlled, clutchless compressor (5.0L AJ133 NA/SC)

The A/C compressor is engaged by pressing either;

- the automatic mode switch
- the defrost switch
- the A/C switch
- or the maximum A/C switch.

INTERNALLY CONTROLLED CLUTCHED COMPRESSOR

This type of compressor uses a variable swash plate to vary to the displacement of the A/C (air conditioning) compressor which improves efficiency. This is achieved by reducing the displacement when the difference between the suction and discharge pressures in the A/C compressor as small.

The only external control of this device is a magnetic clutch which is controlled by the HVAC ECU. It is used to engage/disengage the compressor from the engine. The clutch is driven directly from the HVAC ECU via a high side power FET.

The software include an A/C off delay (10s) to prevent the rapid cycling of the clutch if a customer quickly presses the A/C button multiple time.

The following are the conditions will inhibit the A/C.

- Low ambient Temperature (Off at <-2DegC, On at > 2DegC)
- Low A/C Pressure (Off at <1.5Bar, On at > 2.5Bar)
- High A/C Pressure (Off at >20Bar, On at < 28Bar)
- Climate System Off/Blower zero
- Engine Off
- Engine Inhibit (due to high coolant, engine limp home, wide open throttle etc)
- Low evaporator temperature

The evaporator cut-off threshold is dependent on ambient, i.e. the lower the ambient, the higher the cut-off. The inhibit will be removed when the evaporator temp has recovered by 2Kelvin over the cut-out temp threshold.

EXTERNALLY CONTROLLED CLUTCHLESS COMPRESSOR

This type of compressor uses a variable swash plate to vary the displacement but this time it is indirectly controlled by the HVAC ECU. A small solenoid inside the compressor moves a spring which controls the displacement. The HVAC ECU controls this solenoid via a high side drive FET. The valve is a current controlled device which means the HVAC ECU include a current shunt in the drive circuit to measure the current being drawn by the device. The current is reduced by reducing the duty of the 400Hz PWM (pulse width modulation) control signal to the valve.

The HVAC ECU includes a complex algorithm to calculate the required duty by using a PID controller. It adjusts the PWM signal to try to get the measured evaporator sensor temperature to be the same as the target evaporator temperature.

The conditions for turning off the A/C are the same as the internally controlled except that the compressor duty is reduced rather than cut straight away which leads to a more refined control.

ENGINE IDLE SPEED CONTROL

There are 3 levels and the request from HVAC is set in both hot and cold ambients.

In hot ambients, the feature is to help with A/C performance by raising the A/C compressor speed and in cold ambients to help with cabin warm-up by increasing the engine speed.

The request is only sent when the climate system is on and engine is running. Otherwise the request is zero.

The 3 speeds are:

- Level 1 = 750rpm
- Level 2 = 900RPM
- Level 3 = 1200RPM

The speed thresholds are held in PCM and operate in both Neutral and Drive mode.

Also there is a piece of code to increase to level 2 if the A/C pressure jumps to more than 20Bar as this means the A/C is struggling and needs an increased engine idle to help by increasing the A/C compressor speed and the viscous cooling fan speed.

ENGINE COOLING FAN CONTROL

The HVA C ECU calculates the requested cooling fan speed to PCM. The request is HVAC, and calculated based on ambient temperature, A/C pressure and then is compensated for vehicle speed. The request is only sent if the HVAC is switched on, A/C is on and engine is running.

The cooling fan demand (0..100%) has a rate limiter and includes a delay if the A/C is switched off.

A/C TORQUE CALCULATION

The torque used by the A/C system is calculated in the PCM. The PCM uses ambient temp, A/C pressure and A/C compressor displacement control valve current as inputs to determine the torque on the engine.

TEMPERATURE CONTROL

To determine the amount of heat required, in the form of coolant flow through the heater, the ATC module compares the reference value with the heater temperature and incorporates a correction factor to compensate for changes of coolant flow rate with engine speed. From the resultant value the ATC module determines the open duration of the coolant valve and outputs the appropriate control signal. On the automatic system, separate values and output signals are generated for each coolant valve to produce the individual temperature control for the LH and RH sides of the cabin.

When the temperature setting on the control panel is set to maximum, the ATC module signals the coolant valve to remain open. When the temperature setting on the control panel is set to minimum, the ATC module signals the coolant valve to remain closed.

On the automatic system, the minimum setting is over-ridden when the defrost program, maximum A/C, rest heating or fuel fired booster heater functions are selected.

Heater Coolant Circuit

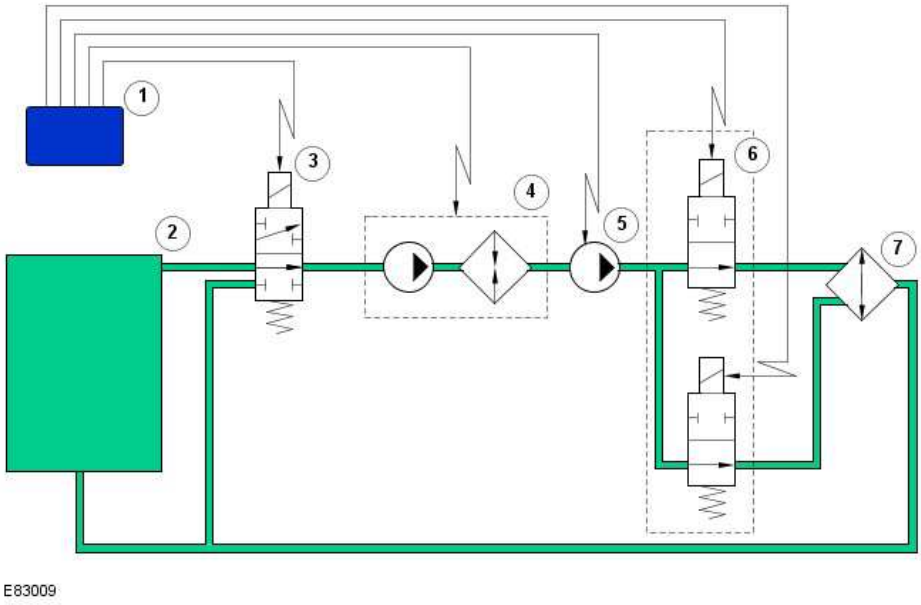

ITEM	DESCRIPTION
1	Heater core
2	Coolant valves
3	Auxiliary coolant pump
4	Engine cooling system
5	ATC module
6	Changeover valve (where fitted)
7	Fuel fired booster heater (where fitted)

DOOR CONTROL

The position of the ram air doors is automatically controlled by the ATC module. The positions of the recirculation doors and the distribution doors are either automatically controlled by the ATC module or manually controlled by the related switches.

Ram Air Doors

The ATC module progressively closes the ram air doors, in four steps, as vehicle speed increases, and opens them again as vehicle speed decreases. At the maximum closed position, 90% of the fresh air inlet area is closed off. A hysteresis of 15 km/h (9 mph) prevents the ram air doors from hunting at a constant vehicle speed.

Ram Air Door Positions

NOTE:

A = Door position, % open; **B** = Opening speeds, mph (km/h); **C** = Closing speeds, mph (km/h)

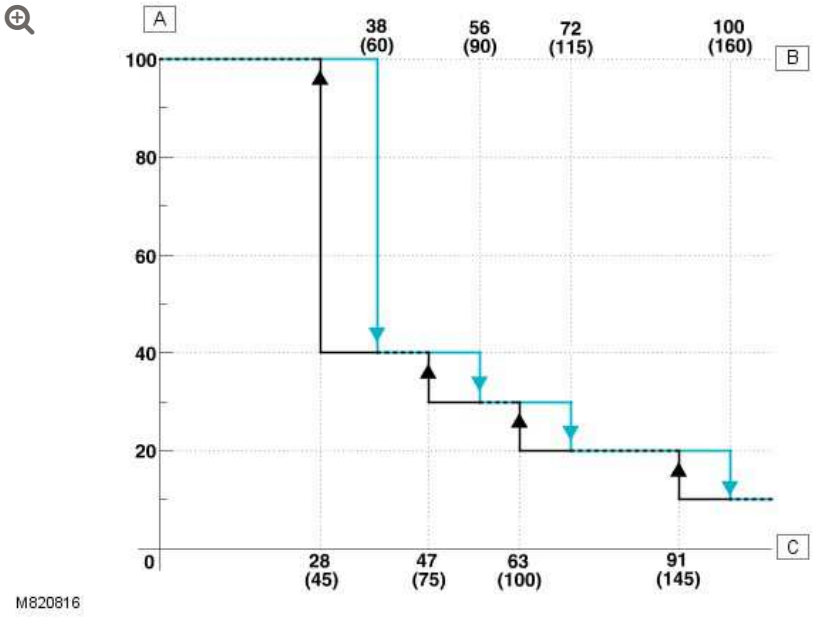

Recirculation Doors

Unless the recirculation doors are manually selected closed, using the recirculation switch on the control panel or the steering wheel recirculation switch (where fitted), they are normally open, but automatically closed by the ATC module under certain conditions:

Rapid Cooling: For rapid cooling of the cabin, when the A/C system is selected on, if the driver's side reference value is less than -20% and the ambient temperature is more than 6 °C (43 °F), the ATC module closes the recirculation doors. The ATC module opens the recirculation doors after 12 minutes (temperate climates) or 20 minutes (hot climates), if the driver's side reference value increases to more than -5% or if the ambient temperature decreases to 6 °C (43 ° F).

Pollution: When the ATC module detects a high level of pollutants, it sets the recirculation doors to the recirculation position for:

- 3 minutes if the A/C system is in the heating mode.
- 10 minutes if the A/C system is in the cooling mode.

After the recirculation time period, the ATC module returns the recirculation doors to the fresh air position. After 1 minute, if the pollutants are still present, the ATC module repeats the recirculation cycle.

Ignition Off: If the recirculation doors are in the recirculation position when the ignition is switched off, the ATC module automatically sets them to the fresh air position, to ensure that fresh air is available if a fault occurs with the recirculation door drive circuit at the next ignition on. When the ignition is switched on, the ATC module sets the recirculation doors to the position they were in at ignition off.

Distribution Doors

When a manual distribution selection is made on the control panel, the ATC module moves the distribution doors to preset positions. When the system is in the automatic mode, the ATC module uses maps of the driver's side reference value to determine the position of the distribution doors. Each distribution door has a separate map, and there are separate maps for temperate, hot climates and Japan.

The mapped positions of the face level distribution doors are given a correction factor from the sunlight sensor inputs.

BLOWER CONTROL

In the automatic mode, blower speed is determined from reference temperature maps. In general terms, the more heating or cooling required to achieve the temperature selected on the control panel with the driver's side temperature switch, the faster the blower speed.

When maximum cooling is first required in the automatic mode, the ATC module runs the blower at full speed for a fixed period regardless of any drop in cabin temperature. Different time periods are incorporated for the following markets:

- NAS and Gulf States
- Europe, ROW and Japan

NAS and Gulf States have the longest time period with the blower at full speed. The Land Rover approved diagnostic equipment can be used to change the market setting so, in some cases, if a customer complains of the duration the blower runs at full speed, changing the market setting could resolve the complaint.

When heating is required, blower speed is reduced if the engine is cold and then progressively increased to the nominal setting as the engine coolant temperature increases from 20 to 50 °C (68 to 122 ° F).

Blower speed is also influenced by the sunlight sensor. At high light levels blower speed will increase to increase the cooling effect.

When the blower is selected off temperature regulation is no longer possible so the ATC module disengages the A/C compressor, de-energizes the auxiliary water pump and closes the coolant valves. Pressing any of the A/C system switches restores blower operation

and activates the required function. If the blower is selected off when the ignition is switched off, the blower remains off if the ignition is switched on again within 15 minutes. If more than 15 minutes elapses between the ignition being switched off and back on again, the ATC module switches the blower on at speed 1.

If battery voltage is low the ATC module reduces blower speed to conserve power. If battery voltage decreases to less than 12 V, the ATC module decreases the blower signal voltage, and thus the voltage to the blower motor, in direct proportion to the reduction in battery voltage.

DEFROST PROGRAM

When the defrost program is selected the ATC module:

- Opens the windshield distribution doors and closes the face and footwell doors.
- Sets the recirculation doors to the fresh air position.
- Runs the blower at speed 7.
- Activates the A/C compressor.
- Activates the heated rear window.
- Activates the heated windshield (where fitted).

When the ambient temperature is 10 °C (50 °F) and below, the ATC module signals the coolant valves to remain open. When the ambient temperature is more than 10 °C (50 °F), the ATC module checks the existing heater core temperature and, if necessary, increases the open time of the coolant valves to produce a minimum heater core temperature of 30 °C (86 °F).

The defrost program is cancelled by pressing the defrost switch again, or pressing the automatic, A/C or maximum A/C switches

MAXIMUM A/C

Pressing the maximum A/C switch while the engine is running and the ambient temperature is more than 7 °C (45 °F) provides the maximum cooling possible from the system to cool the cabin down as rapidly as possible. When maximum A/C is selected the coolant valves are held closed, the A/C compressor is engaged, the blower speed is set to maximum and the recirculation doors are set to the recirculation position. After 12 minutes the recirculation doors will be set to fresh air for 1 minute then returned to the recirculation position.

The maximum A/C function is cancelled when any of the other A/C system switches are pressed.

REST HEATING

When the engine is not running, pressing the maximum A/C switch activates the rest heating function to heat the cabin with residual heat from the engine. The rest heating function activates provided the following conditions exist:

- It is less than 2 minutes since the ignition was selected off.
- Ambient temperature is less than 15 °C (59 °F).
- On the previous ignition cycle engine temperature exceeded 70 °C (158 °F).
- Battery voltage is 11.4 V minimum.

To provide the rest heating function, the ATC module activates the auxiliary coolant pump, coolant valves, control door and blower. The ATC module regulates the temperature (to the driver setting selected before the ignition was switched off), opens the face level distribution doors and runs the blower at speed 4.

The rest heating function is cancelled after 15 minutes or when:

- The maximum A/C switch is pressed again.

- The ignition is selected on.
- Battery voltage decreases to less than 11 V.

REAR PASSENGER FACE LEVEL AIR

The volume and temperature of the air from the rear passenger face register are adjusted with the rotary controls positioned at the rear of the floor console. Each rotary control operates a variable potentiometer connected to the ATC module. The rotary control initiates stepless changes of rear blower speed between off and full speed. The temperature rotary control controls the position of the rear passenger face level blend door in the heater assembly when the driver's side reference temperature is more than 0%.

Volume Control

The volume potentiometer outputs between 0 and 5 V to the ATC module. The ATC module translates the voltage from the potentiometer into a signal voltage for the output stage in the rear blower. Potentiometer voltages of less than 1.25 V are interpreted as a blower off selection and translate into a signal voltages less than 0.1 V. Potentiometer voltages between 1.25 and 5 V are translated into proportional signal voltages between 0.1 and 5 V.

The ATC module automatically switches off the rear blower when:

- The defrost program is active.
- The main blower is selected off.
- The engine cranks.
- The ignition is selected off (the rear blower remains off during rest heating, parked heating and parked ventilation).

Temperature Control

The temperature potentiometer outputs between 0 and 5 V to the ATC module. The ATC module translates the voltage from the

potentiometer into a blend door position between 0% (cold) and 100% (hot) and outputs the appropriate control signal on the M bus to the blend door motor. Potentiometer voltages of less than 1.5 V translate to a blend door position of 0%. Potentiometer voltages of more than 3.4 V translate to a blend door position of 100%. Potentiometer voltages between 1.5 and 3.4 V translate linearly to blend door positions between 0 and 100%.

HEATED WINDSHIELD (WHERE FITTED)

When the engine is running and the heated windshield is selected on, the ATC module illuminates the LED above the switch and energizes the heated windshield relay attached to the passenger end of the fascia cross tube. If not already active, the ATC module also activates the A/C compressor and the blower, and sets air distribution to windscreen. After 10 minutes (when ambient temperature is -15 °C (5 °F) or above) or 17 minutes (when ambient temperature is less than -15 °C (5 °F)), the ATC module extinguishes the LED and de-energizes the heated windshield relay. After the heater times out or is switched off, the timer in the ATC module is reset to zero.

HEATED REAR WINDOW

When the engine is running and the heated rear window is selected on, the ATC module illuminates the LED above the switch and energizes the heated rear window relay in the AJB (auxiliary junction box). After 10 minutes (when ambient temperature is -15 °C (5 °F) or above) or 17 minutes (when ambient temperature is less than -15 °C (5 °F)), the ATC module extinguishes the LED and operates the heated rear window at low power for 60 minutes. During the 60 minutes, the ATC module cycles the heated rear window relay off for 80 seconds and on for 40 seconds. If the heated rear window switch is pressed again during the low power phase, the ATC module illuminates the LED again and returns the heated rear window to full power by keeping the heated rear window relay energized for 5

minutes. At the end of the 5 minutes the LED is extinguished and the 60 minutes low power phase is repeated.

The ATC module outputs a K bus message when the heated rear window is active. The message allows the navigation computer to compensate for the effect of the magnetic field generated when the heated rear window is active. In addition, the generic electronic module (GEM) transfers the message onto the P bus for the door modules, which activate the door mirror heaters together with the heated rear window.

WASHER JET HEATERS

The ATC module automatically energizes the washer jets relay, on the CJB, when the ignition is on and the ambient temperature is less than 3 °C (37 °F). If the ambient temperature increases to more than 6 °C (43 °F), the ATC module de-energizes the washer jets relay.

PARKED VENTILATION

Parked ventilation allows the vehicle interior to be ventilated with ambient air while parked with the engine stopped. Vehicles without a fuel fired booster heater have parked ventilation only. On vehicles with a fuel fired booster heater, parked ventilation operates in conjunction with parked heating.
For additional information, refer to: Auxiliary Heater (412-02B, Description and Operation).

Parked ventilation is controlled by direct selection on the TSD (touch screen display), or by using the TSD to program one or two on/off cycle times in the following 24 hour period. Both the direct selection and programmed time modes of operation are selected when the engine is stopped and the ignition switch is in position I; if required, the key can then be removed from the ignition switch and the vehicle locked. Parked ventilation only operates if the ambient temperature is 16 °C (61 °F) or more, and is automatically de-activated after 30 minutes, regardless of any programmed 'off' time, to prevent

excessive drain on the battery. Parked ventilation is automatically de-activated when the ignition is switched on.

When programmed times for parked ventilation are entered on the TSD, the times are stored in the memory of the instrument cluster and the climate set indicator in the top left corner of the TSD is permanently illuminated.

At a programmed parked ventilation start time, or when parked ventilation is selected on using the TSD, the instrument cluster outputs:

- A parked ventilation request to the TSD on a hardwired connection
- A parked ventilation request to the ATC module on the K bus
- The ambient temperature to the ATC module and GEM on the K bus.

On receipt of the messages:

- The climate set indicator flashes at 2 Hz, to indicate that parked ventilation is active.
- The ATC module operates the blower at speed 1, opens the face level distribution doors in the heater assembly and closes the windshield and footwell doors.

The ATC module disables parked ventilation if battery voltage is less than 11.4 V.

CLIMATIC SEATS

High specification vehicles are fitted with climatic seats, which are able to deliver heating and cooling to the front seat occupants. Vehicles fitted with climatic seats feature 2 additional rotary controllers mounted in the ATC module.

NOTE:

> If climatic seats are fitted, heated seat rotary controllers are featured on the ATC module control panel.

The controlling software for the climatic seats is contained within a control module mounted below the drivers seat. When a temperature selection is made through either of the rotary controllers, the instrument panel switch pack provides a PWM signal to the control module. The control module interprets the PWM signal as a temperature value and attempts to heat or cool the seat accordingly.

Both climatic front seats contain two Peltier cells; one in the cushion, one in the backrest. The Peltier cells are able to deliver heating and cooling based on a voltage provided by the control module. Each seat also contains a fan, which blows air over the Peltier cells to distribute heating or cooling throughout the seat.

The climatic seat control module monitors seat heating through a NTC temperature sensor. The temperature sensor is only used to monitor seat heating. Seat cooling is open loop, with no temperature signal provided back to the control module.

Although the switch LED's will illuminate if a selection is made when the ignition is switched on, the Peltier cells will not operate until the engine is running. After the ignition has been switched off, the control module will remember the current temperature settings for approximately 15 minutes. After this period, the seats will be set to 'off' when the ignition is switched back on.

REAR SEAT CENTRE CONSOLE CLIMATE CONTROLS – ULTIMATE

(G1393706)

REMOVAL AND INSTALLATION

REMOVAL

NOTE:

Removal steps in this procedure may contain installation details.

1. Refer to: Rotating Tray And Cupholder Assembly (501-12, Removal and Installation).

2.

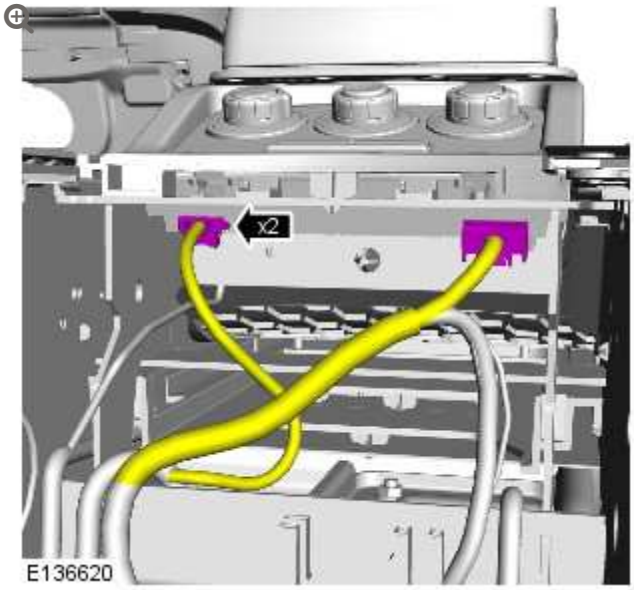

3.



- *Torque:* **3 Nm**

4.

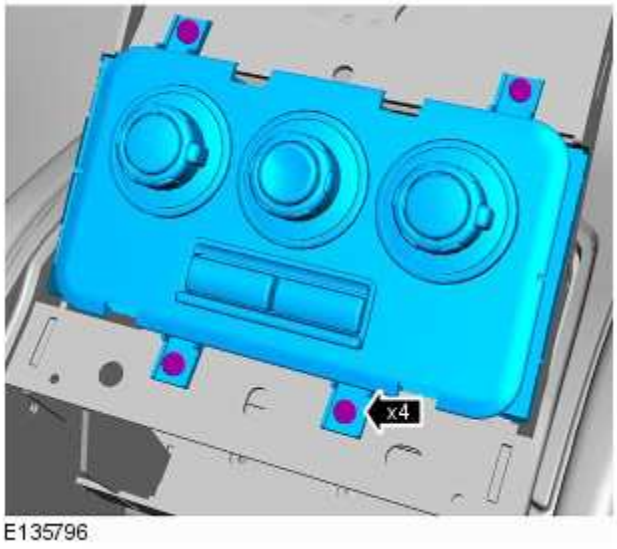

- *Torque:* **3 Nm**

INSTALLATION

1. To install, reverse the removal procedure.

2012.0 RANGE ROVER (LM), 412-02

HEATING AND VENTILATION

SPECIFICATIONS

Authoring Template

HEATING AND VENTILATION

BLOWER MOTOR (G910468)

REMOVAL AND INSTALLATION

80.20.15	MOTOR – FAN – RENEW	ALL DERIVATIVES	7	USED WITHINS	+

REMOVAL

WARNINGS:

- Persons working on the supplemental restraint system (SRS) must be fully trained and have been issued with the safety guidelines.
- Allow a period of 10 minutes to elapse after disconnecting the battery before undertaking any work on the SRS.
- The SRS electrical connectors are unique. DO NOT force, or attempt to connect electrical connectors to the wrong sockets.
- The correct procedures must always be used when working on SRS components.
- It is imperative that before any work is undertaken on the SRS system, the appropriate information is read thoroughly.
- Always disconnect both battery cables before beginning work on the SRS system. Disconnect the ground cable first. Never reverse connect the battery.
- Take extra care when handling SRS components.

1. Make the air bag supplemental restraint system (SRS) safe.
   For additional information, refer to: Standard Workshop Practices (100-00, Description and Operation).

2. Disconnect the battery ground cable.
   For additional information, refer to: Specifications (414-00, Specifications).

3. Remove the heater and evaporator core housing.
   For additional information, refer to: Heater Core and Evaporator Core Housing (412-02, Removal and Installation).

4.

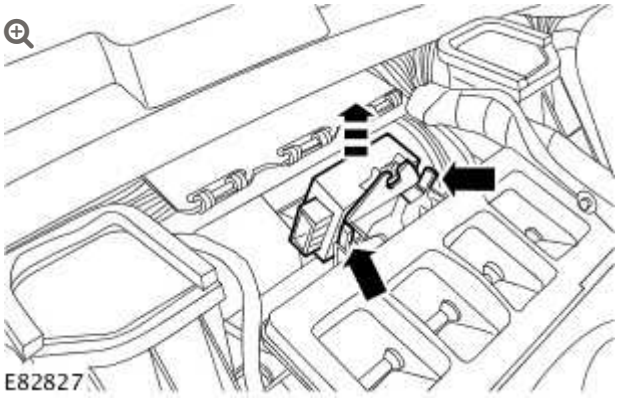

Remove the passive anti-theft system (PATS) module.

- Release the 2 clips.

5.



Remove the blower motor cover.

- Release the 3 clips.

6.

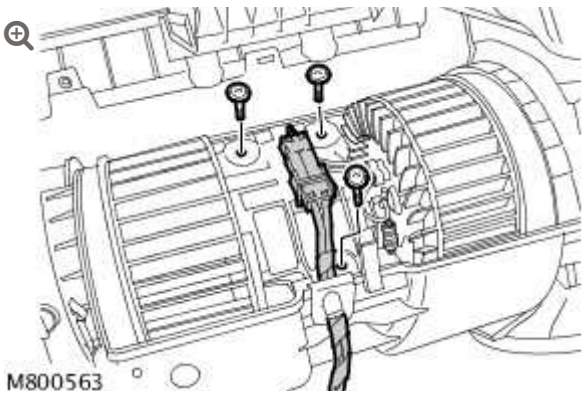

Remove the blower motor.

- Remove the 3 screws.

- Disconnect the electrical connector.
- Release the wiring harness grommet.
- Reposition the wiring harness.

INSTALLATION

1. Install the blower motor.
   - Secure the wiring harness grommet.
   - Connect the electrical connector.
   - Install the screws.
2. Install the blower motor cover.
   - Install the clips.
3. Install the PATS module.
   - Secure the clips.
4. Install the heater and evaporator core housing.
   For additional information, refer to: Heater Core and Evaporator Core Housing (412-02, Removal and Installation).
5. Connect the battery ground cable.
   For additional information, refer to: Specifications (414-00, Specifications).

HEATING AND VENTILATION

HEATER CONTROL VALVE

(G1240584)

REMOVAL AND INSTALLATION

REMOVAL

1. Disconnect the battery ground cable.
   For additional information, refer to: Specifications (414-00, Specifications).

2. Drain the coolant.
   For additional information, refer to: Cooling System Draining, Filling and Bleeding - Vehicles Without: Supercharger (303-03B, General Procedures) / Cooling System Draining, Filling and Bleeding - Vehicles With: Supercharger (303-03B, General Procedures).

3.

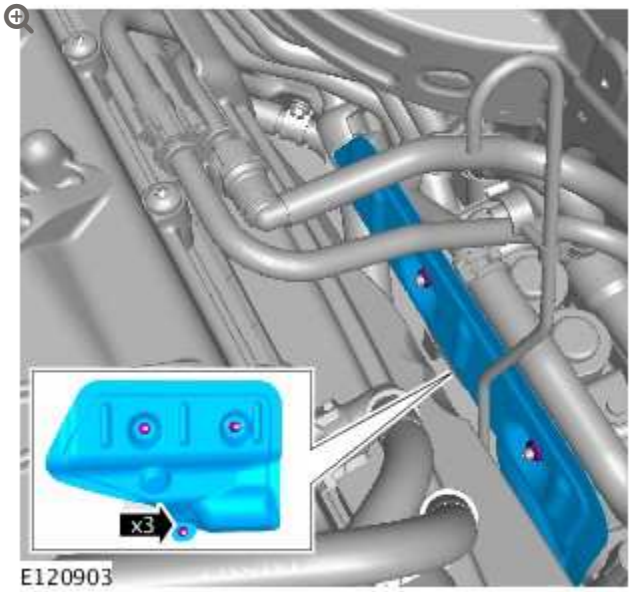

TORQUE: 6 Nm

4.

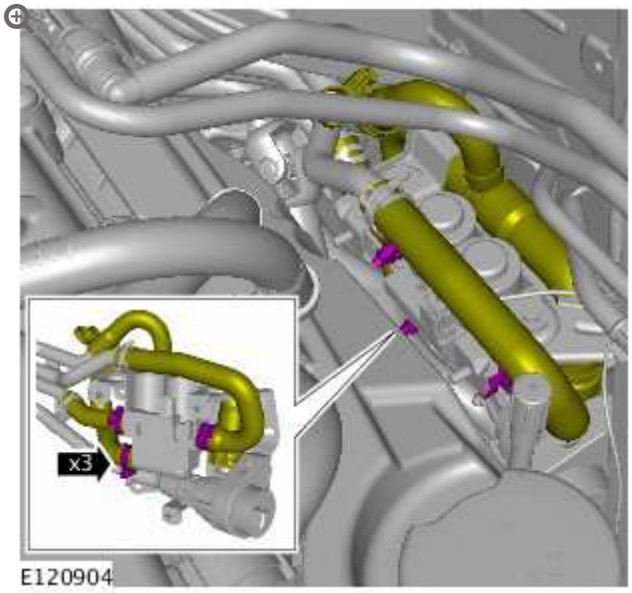

5.

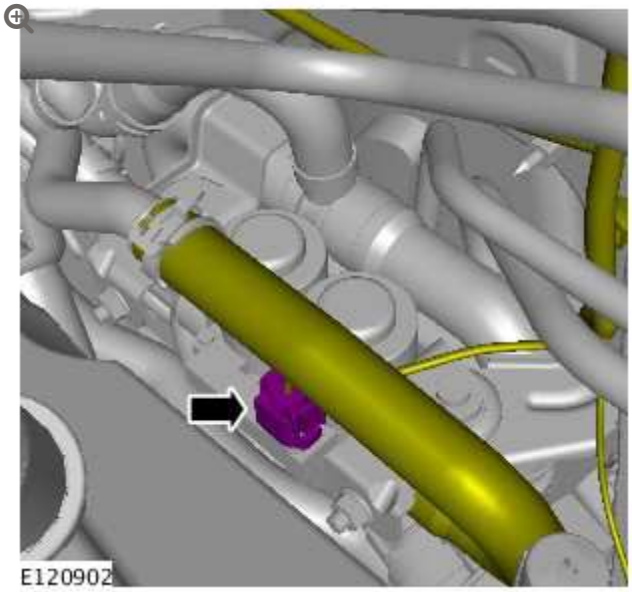

6.

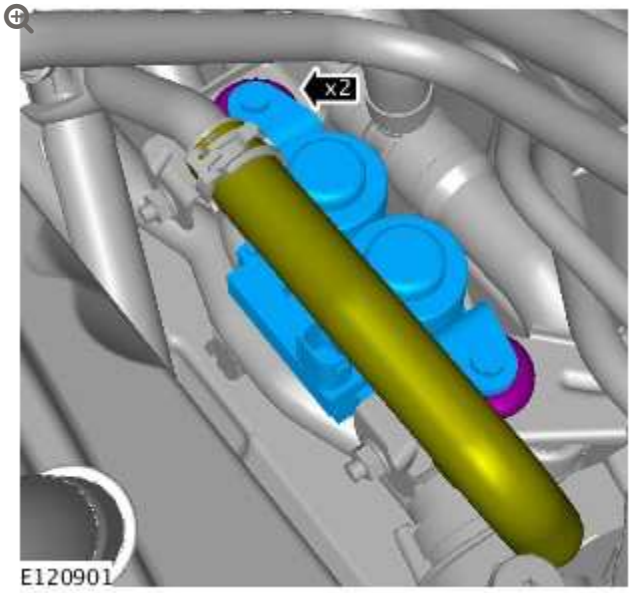

INSTALLATION

1. To install, reverse the removal procedure.

HEATING AND VENTILATION

HEATER CORE – V8 S/C 5.0L PETROL (G1240582)

REMOVAL AND INSTALLATION

80.20.29	HEATER CORE - RENEW	5000 CC, AJ V8, SUPERCHARGED	6.6	USED WITHINS	+

REMOVAL

WARNINGS:

- Persons working on the supplemental restraint system (SRS) must be fully trained and have been issued with the safety guidelines.
- Allow a period of 10 minutes to elapse after disconnecting the battery before undertaking any work on the SRS.
- The SRS electrical connectors are unique. DO NOT force, or attempt to connect electrical connectors to the wrong sockets.
- The correct procedures must always be used when working on SRS components.
- It is imperative that before any work is undertaken on the SRS system, the appropriate information is read thoroughly.
- Always disconnect both battery cables before beginning work on the SRS system. Disconnect the ground cable first. Never reverse connect the battery.
- Take extra care when handling SRS components.

1. Set the footwell duct air outlet to closed.

2. Make the air bag supplemental restraint system (SRS) safe.
   For additional information, refer to: Standard Workshop Practices (100-00 General Information, Description and Operation).

3. Disconnect the battery ground cable.
   For additional information, refer to: Specifications (414-00 Charging System - General Information, Specifications).

4.

Remove the heater and evaporator core housing.
For additional information, refer to: Heater Core and Evaporator Core Housing - 5.0L SC V8 - AJ133 (412-02A, Removal and Installation).

5. Reposition the heater and evaporator core housing for access.

6. 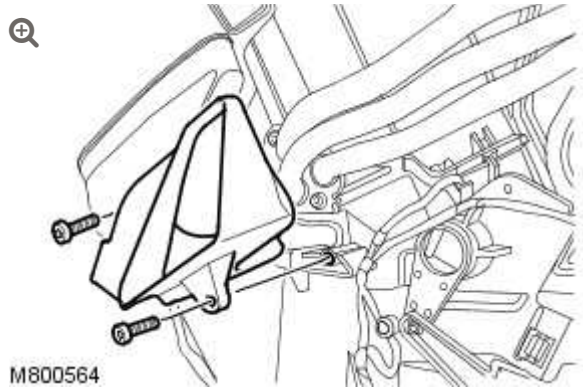

Remove the left-hand footwell duct.

- Remove the 2 screws.

7. 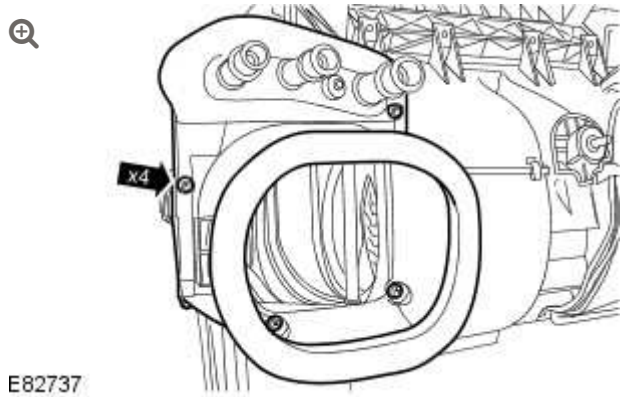

Remove the left-hand air intake duct.

- Remove the 4 screws.

8.

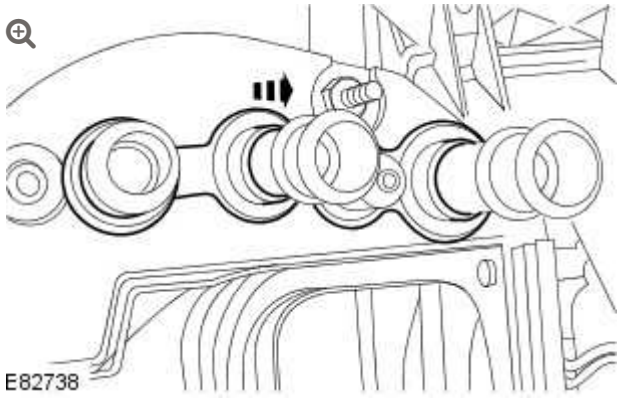

Remove the gasket from the heater core inlet and outlet pipes.

9.

CAUTION:

Always plug any open connections to prevent contamination.

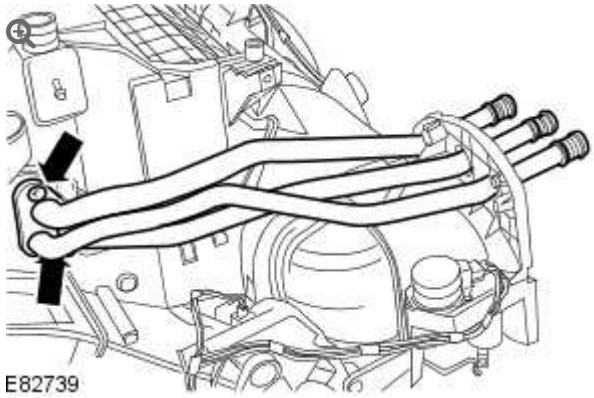

Remove the heater core, inlet and outlet pipes.

- Remove the 2 screws.
- Remove and discard the 3 O-ring seals.

10.

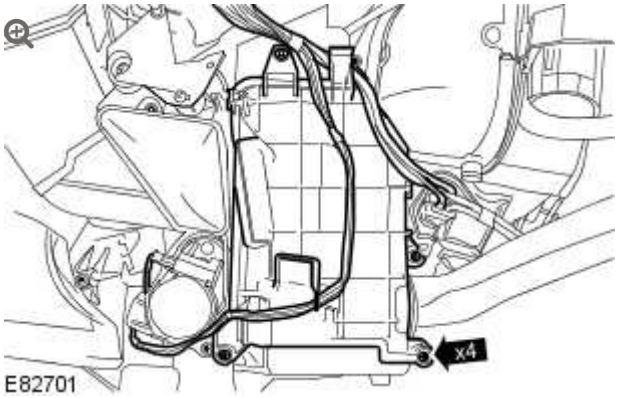

Remove the thermostatic expansion valve cover.

- Release the wiring harness from the 2 tangs.
- Remove the 4 screws.

11. 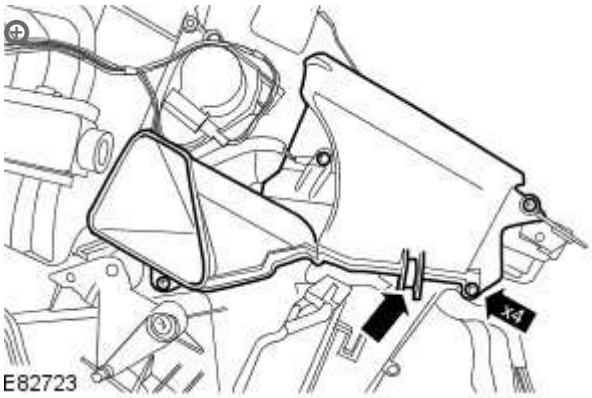

Remove the right-hand footwell duct.

- Remove the 4 screws.
- Remove the clip.

12. Disconnect the floor duct actuator motor electrical connector.

13. Release the evaporator temperature sensor from the heater and evaporator core housing.

14.

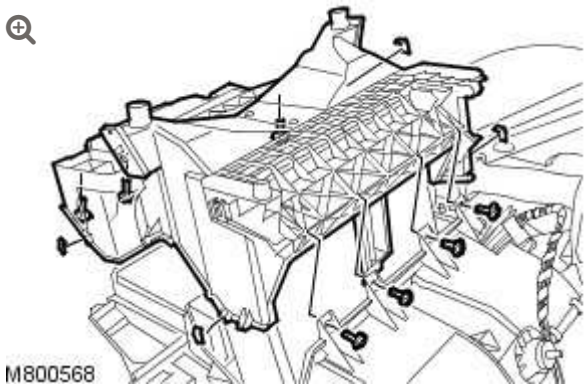

Remove the heater and evaporator core housing lower cover.

- Remove the 7 screws.
- Remove the 4 clips.

15. Remove the heater core.

INSTALLATION

1. Install the heater core.
2. Install the heater and evaporator core housing lower cover.
   - Install the screws.
   - Install the clips.
3. Install the evaporator temperature sensor to the heater and evaporator core housing.
4. Connect the floor duct actuator motor electrical connector.
5. Install the right-hand footwell duct.
   - Install the screws.
   - Install the clip.

6. Install the thermostatic expansion valve cover.
   - Install the screws.
   - Secure the wiring harness to the tangs.

7. Install the heater core, inlet and outlet pipes.
   - Clean the component mating faces.
   - Lubricate and install the new O-rings.
   - Tighten the screws to 10 Nm (7 lb.ft).

8. Install the gasket to the heater core inlet and outlet pipes.

9. Install the left-hand air intake duct.
   - Install the screws.

10. Install the left-hand footwell duct.
    - Install the screws.

11. Reposition the heater and evaporator core housing for access.

12. Install the heater and evaporator core housing.
    For additional information, refer to: Heater Core and Evaporator Core Housing - 5.0L SC V8 - AJ133 (412-02A, Removal and Installation).

13. Connect the battery ground cable.
    For additional information, refer to: Specifications (414-00 Charging System - General Information, Specifications).

HEATING AND VENTILATION

HEATER CORE AND EVAPORATOR CORE HOUSING – V8 S/C 5.0L PETROL (G1245182)

REMOVAL AND INSTALLATION

80.20.01.99	HEATER HOUSING - REMOVE FOR ACCESS AND REFIT	5000 CC, AJ V8, SUPERCHARGED	6	USED WITHINS	+

REMOVAL

WARNINGS:

- Persons working on the supplemental restraint system (SRS) must be fully trained and have been issued with the safety guidelines.
- Allow a period of 10 minutes to elapse after disconnecting the battery before undertaking any work on the SRS.
- The SRS electrical connectors are unique. DO NOT force, or attempt to connect electrical connectors to the wrong sockets.
- The correct procedures must always be used when working on SRS components.
- It is imperative that before any work is undertaken on the SRS system, the appropriate information is read thoroughly.
- Always disconnect both battery cables before beginning work on the SRS system. Disconnect the ground cable first. Never reverse connect the battery.
- Take extra care when handling SRS components.

1. Refer to: Specifications (414-00 Battery and Charging System - General Information, Specifications).
2. Refer to: Cooling System Partial Draining and Vacuum Filling (303-03B, General Procedures).
3. Refer to: Air Conditioning (A/C) System Recovery, Evacuation and Charging - V8 5.0L Petrol/V8 S/C 5.0L Petrol (412-00 Climate Control System - General Information, General Procedures).
4. Refer to: In-Vehicle Crossbeam - V8 S/C 5.0L Petrol (501-12 Instrument Panel and Console, Removal and Installation).

5.

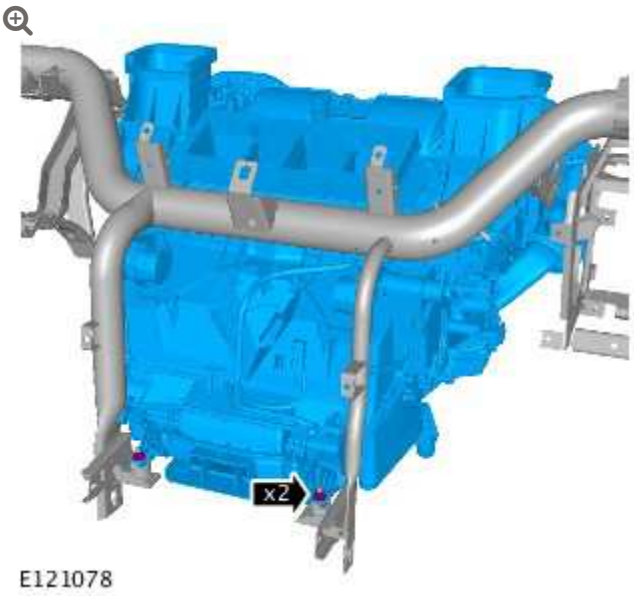

E121078

INSTALLATION

1. To install, reverse the removal procedure.

2012.0 RANGE ROVER (LM), 412-02

HEATING AND VENTILATION

DESCRIPTION AND OPERATION

COMPONENT LOCATION

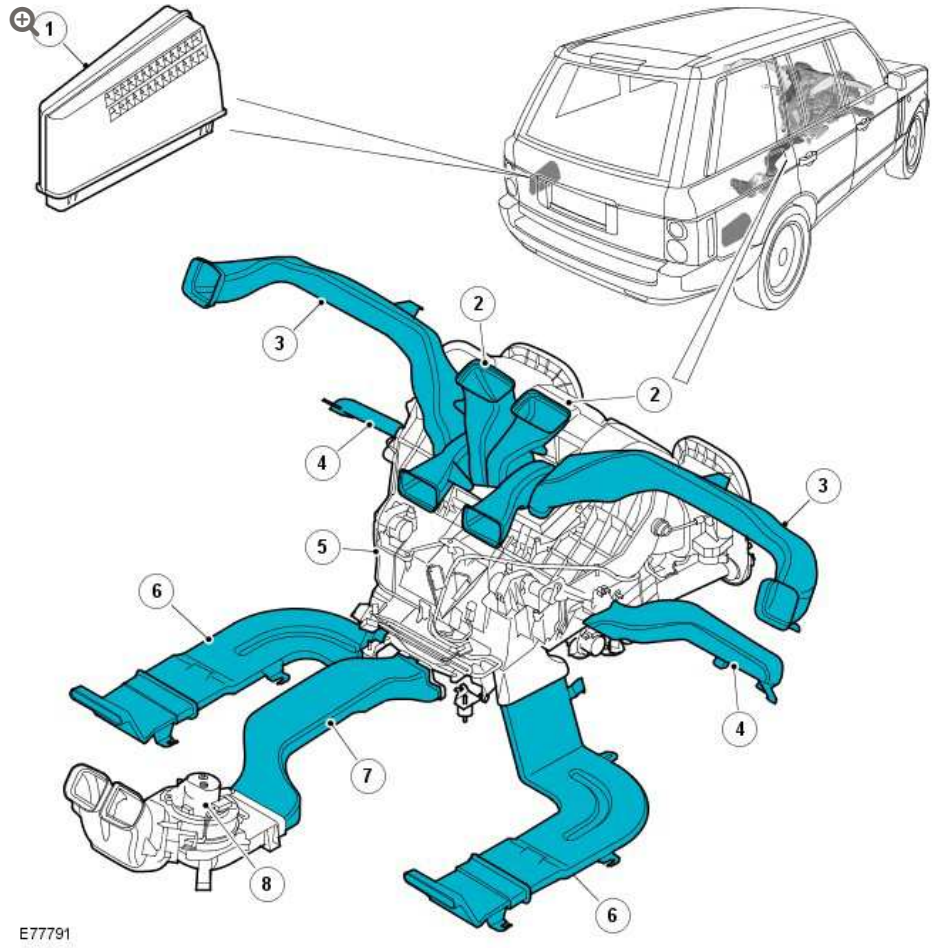

ITEM	DESCRIPTION
1	Forced ventilation outlet

ITEM	DESCRIPTION
2	Windshield duct
3	Face level duct
4	Front footwell duct
5	Heater assembly
6	Rear footwell duct
7	Rear face duct
8	Rear blower

OVERVIEW

The heating and ventilation system controls the temperature and flow of air supplied to the vehicle interior. The system consists of:

- An air inlet duct.
- A heater.
- A rear blower.
- Two ventilation outlets.

Fresh or recirculated air flows into the heater from the inlet duct. The blower, and ram effect when the vehicle is moving, forces the air through the heater. Air from the cabin exhausts through the ventilation outlets.

Some vehicles may be fitted with a 4 zone climate control system. For additional information, refer to: Auxiliary Climate Control (412-02C Auxiliary Climate Control, Description and Operation).

AIR INLET DUCT

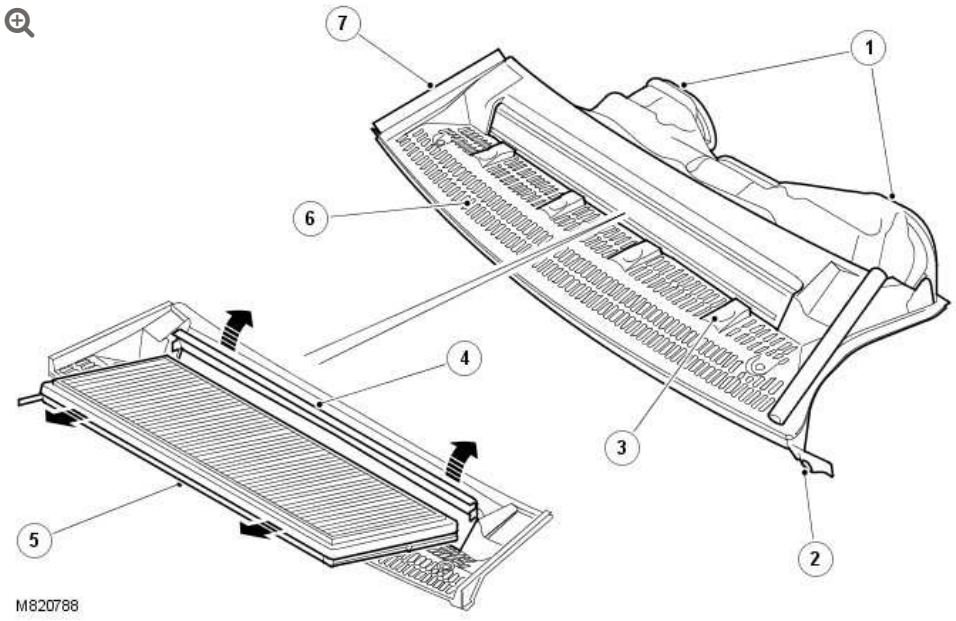

ITEM	DESCRIPTION
1	Air outlet to heater assembly
2	Fixing lug
3	Door catch
4	Door
5	Particle or particle/odor filter
6	Inlet grille
7	Seal

The air inlet duct directs fresh air from above the hood into the heater. The air inlet duct is centrally mounted on the engine bulkhead, below a ventilation grill in the hood, and secured to the bulkhead closing panels.

The cabin air filter is installed in the air inlet duct behind a hinged door.
For additional information, refer to: Air Distribution and Filtering (412-01A Air Distribution and Filtering, Description and Operation).

HEATER

The heater controls the temperature, volume and distribution of air supplied to the distribution ducts as directed by selections made on the automatic temperature control (ATC) module control panel. The heater is installed on the vehicle center-line, between the instrument panel and the engine bulkhead. The heater consists of a casing formed from a series of plastic moldings. Internal passages integrated into the casing guide the air through the casing and separate it into two flows, one for the left-hand (LH) outlets and one for the right-hand (RH) outlets. Two drain outlets at the bottom of the casing are connected to overboard drain hoses in the sides of the transmission tunnel.

The heater incorporates:

- A blower.
- A blower motor control module.
- A heater core.
- Control doors.
- Control door motors.
- The thermostatic expansion valve and the evaporator of the air conditioning (A/C) system.
  For additional information, refer to: Air Conditioning (412-03A Air Conditioning, Description and Operation).
- The evaporator temperature sensor and 2 heater temperature sensors.
  For additional information, refer to: Control Components (412-01B Climate Control, Description and Operation).

Heater Assembly

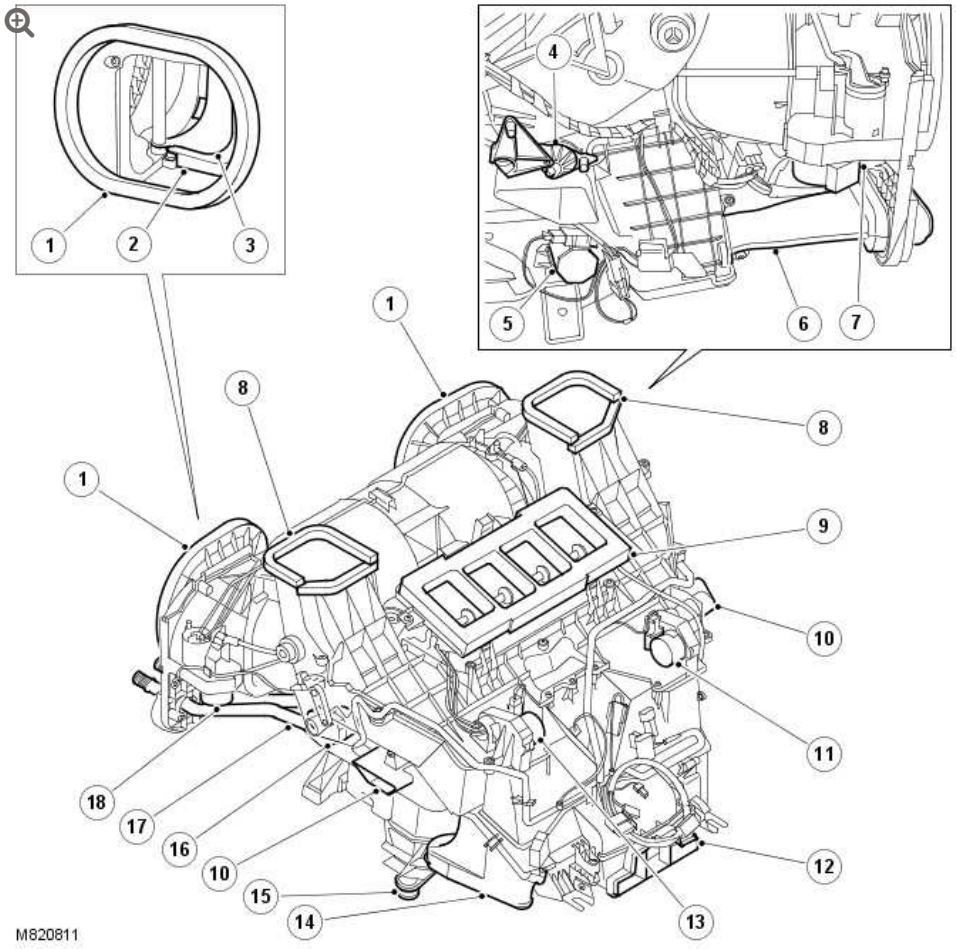

ITEM	DESCRIPTION
1	Fresh air inlet
2	Fresh/Recirculated air door
3	Ram air door
4	Face level temperature blend door control
5	Rear face level temperature blend motor
6	Insulated refrigerant pipes
7	Ram air doors motor
8	Windshield air outlet
9	Face level air outlets
10	Front footwell air outlet
11	Footwell air doors motor
12	Rear face level air outlet

ITEM	DESCRIPTION
13	Face level air doors motor
14	Rear footwell air outlet
15	Water drain
16	Windshield distribution motor
17	Coolant pipes
18	Fresh/Recirculated air door motor

BLOWER

The blower is installed between the air inlets and the evaporator, and consists of 2 open hub, centrifugal fans powered by a single electric motor. Operation of the electric motor is controlled by the ATC module via the blower motor control module (voltage amplifier) installed in the outlet of the RH fan.

To produce the seven blower speeds the ATC module outputs a stepped control voltage between 0 and 8 V to the blower motor control module, which regulates a battery power feed from the central junction box (CJB) to the blower. The control voltage changes, in 1 V steps, between 2 V (blower speed 1) and 8 V (blower speed 7). If the control voltage is less than 2 V the blower is off.

Blower Motor Control Module

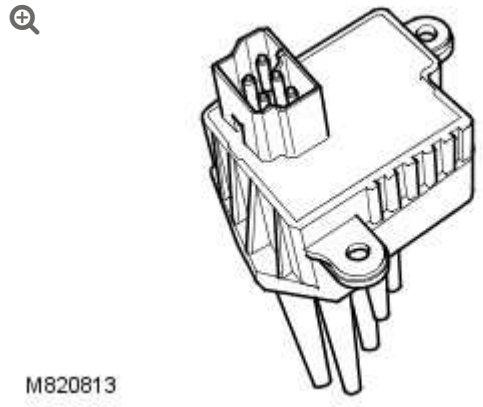

HEATER CORE

The heater core is internally divided into two separate halves, with separate coolant inlets for each half and a common coolant outlet. On the manual system, the two coolant inlets are connected to a common feed from the single coolant valve. Each coolant inlet pipe is connected to a feed from a separate coolant valve.

CONTROL DOORS

Control doors in the heater control the source of inlet air and the distribution and temperature of outlet air.

On both the manual and automatic heaters, a fresh/recirculated air door is installed in the air inlet on each side of the heater. A stepper motor drives the LH fresh/recirculated air door and a Bowden cable transmits the drive from the LH to the RH fresh/recirculated air door. On the automatic system, a ram air door is installed inside each fresh/recirculated air door. A stepper motor drives the RH ram air door and a Bowden cable transmits the drive from the RH to the LH ram air door.

Each side of the heater contains separate distribution doors for the footwell, face level and windshield. The related doors on each side of the heater are installed on common drive spindles. On the manual heater, the distribution doors are driven by Bowden cables connected to a cam mechanism, which, in turn, is driven by a stepper motor. On the automatic heater, each set of distribution doors is driven by a separate stepper motor.

On both the manual and automatic heaters, a blend door is installed below the face level registers. The blend door is driven by a Bowden cable connected to a thumbwheel on the center face level registers in the instrument panel, and allows the temperature of face level air to be modified with cold air direct from the evaporator.

Instrument Panel Center Face Level Register

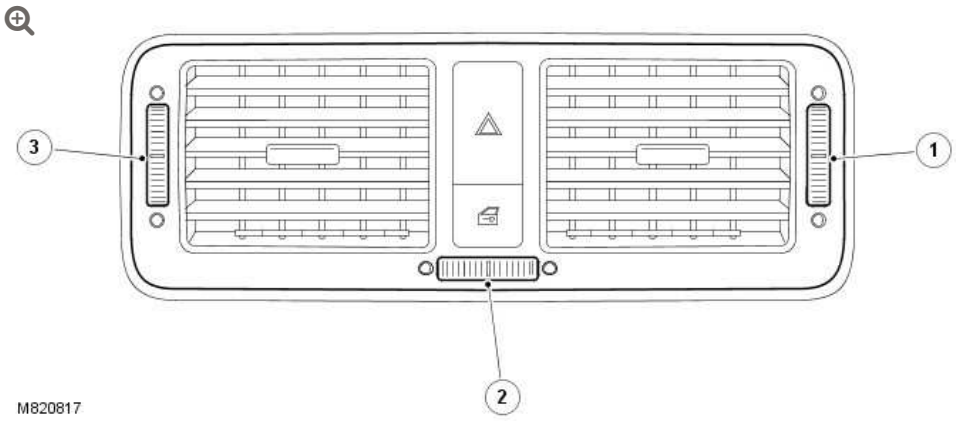

ITEM	DESCRIPTION
1	RH air control thumbwheel
2	Temperature control thumbwheel
3	LH air control thumbwheel

The heater incorporates an additional blend door for the air directed to the rear passenger face level register. This allows the temperature of rear face level air to be adjusted independently from the temperatures selected on the control panel of the ATC module. The blend door is driven by a stepper motor controlled by a thumbwheel on the rear passenger face level register. The blend door is also used to close off the rear passenger face level register when maximum air output is required for the front outlets, e.g. when defrost is selected.

Rear Passenger Face Level Register

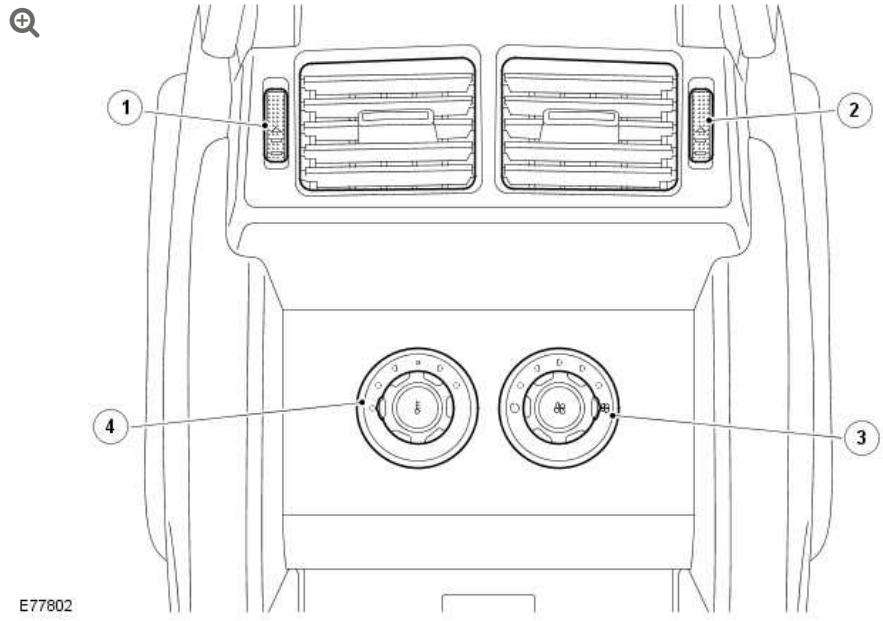

ITEM	DESCRIPTION
1	LH air control thumbwheel
2	RH air control thumbwheel
3	Blower control
4	Temperature control

CONTROL DOOR MOTORS

Two types of electrical stepper motor are used to operate the control doors in the heater. A conventional 500 Hz stepper motor operates the recirculation doors. Five bus controlled 200 Hz stepper motors operate the ram air, distribution (windshield, face level and footwell) and the rear face level temperature control doors. All of the stepper motors are controlled by the ATC module. None of the stepper motors are interchangeable.

Typical Control Door Motor

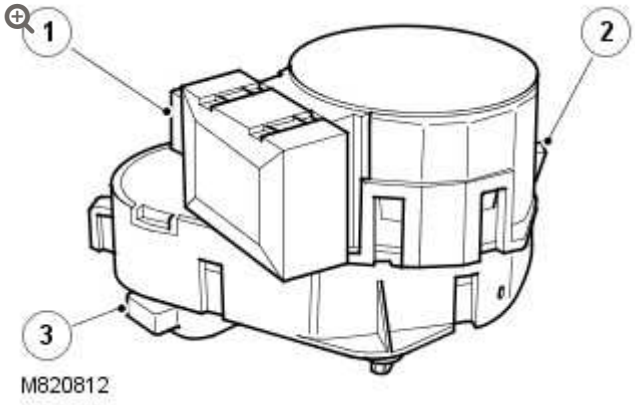

ITEM	DESCRIPTION
1	Electrical connector
2	Release clip
3	Output shaft

Each bus controlled stepper motor incorporates a microprocessor and is connected to an M bus from the ATC module, which consists of three wires making up power, ground and signal circuits. The microprocessor in each bus controlled stepper motor is programmed with a different address. Each M bus message from the ATC module contains the address of an individual bus controlled stepper motor, so only that motor responds to the message.

None of the stepper motors incorporate a feedback potentiometer. Instead, the ATC module determines the positions of the doors by using either their closed or open position as a datum and memorizing the steps that it drives the individual stepper motors. Each time the ignition is switched on, the ATC module checks the memorized position of the stepper motors against fixed values for the current system configuration. If there is an error (e.g. after a power supply failure during operation or after replacement of the ATC module), the ATC module calibrates the applicable stepper motors, to re-establish the datums, by driving them fully closed or open before re-setting them to their nominal position. A calibration

run can also be invoked using the Land Rover approved diagnostic system.

When any of the control doors are set to fully closed or open, the ATC module signals the related stepper motor to move the appropriate number of steps in the applicable direction. To accommodate build tolerances and wear, and to ensure the doors are held in the selected position, every 20 seconds the ATC module signals the stepper motor to move an additional 10 steps in the relevant direction.

REAR BLOWER

The blower is installed between the front seats, in the rear face air duct, and consists of an open hub, centrifugal fan powered by an electric motor. Operation of the electric motor is controlled by a rotary control on the rear passenger face vent via the ATC module and a blower motor control module (voltage amplifier) installed in the outlet of the fan.

The rotary control allows 7 differing blower speeds to be selected. The position of the rotary control is monitored by the ATC module, which then outputs a proportional control voltage between 0 and 5 V to the blower motor control module. The blower motor control module regulates a battery power feed from the rear blower relay to the blower to produce the related blower speed.

The rear blower relay is installed in the AJB (auxiliary junction box) and energized while the ignition is on.

Some vehicles may be fitted with a 4 zone climate control system. For additional information, refer to: Auxiliary Climate Control (412-02C Auxiliary Climate Control, Description and Operation).

Rear Blower Motor Control Module

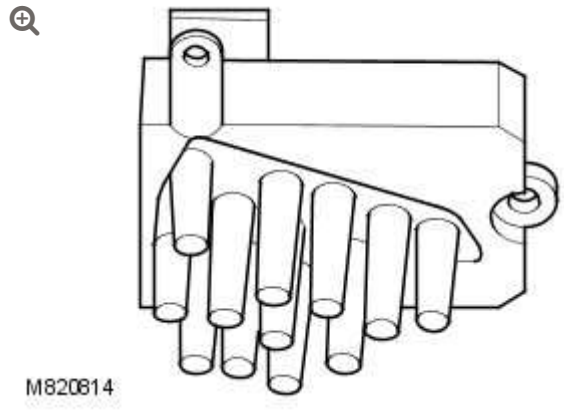

VENTILATION OUTLETS

The ventilation outlets promote the free flow of air through the passenger compartment. The outlets are installed in the LH and RH rear quarter body panels and vent passenger compartment air into the sheltered area between the rear quarter body panels and the rear bumper.

2012.0 RANGE ROVER (LM), 412-02

HEATING AND VENTILATION

DIAGNOSIS AND TESTING

For additional information.

REFER to: Climate Control System (412-00, Diagnosis and Testing).

AUXILIARY HEATING

SPECIFICATIONS

Torque Specifications

DESCRIPTION	NM	LB-FT
Fuel fired booster heater exhaust pipe to body nuts	10	7
Fuel fired booster heater exhaust silencer to body bolt	10	7
Fuel fired booster heater to body bolts	10	7
Fuel fired booster heater to body nut	10	7
Fuel fired booster heater to bracket bolts	10	7

AUXILIARY HEATING

AUXILIARY HEATER REMOTE TRANSMITTER PROGRAMMING (G1390223)

GENERAL PROCEDURES

ACTIVATION

NOTE:

A second or third hand held transmitter can be programmed using this method.

1.

NOTES:

- Use a coin or similar implement to remove and install the battery cover.
- Make sure that correct battery polarity is maintained.



Remove and install the transmitter battery.

2.

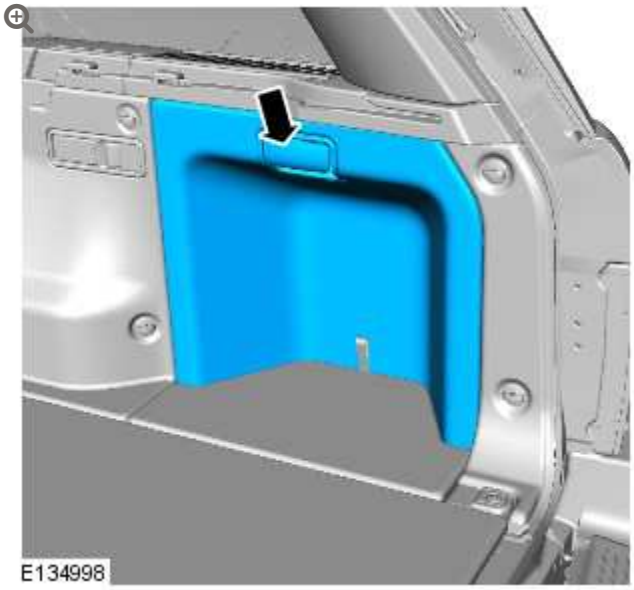

3.



Remove fuse 16 (5 Amp) from the rear loadspace fuse box.

4.

NOTE:

This completes the programming procedure.



Install fuse 16 (5 Amp), and within 5 seconds press the OFF button on the transmitter for at least 1 second.

5. To confirm whether the programming procedure has completed correctly, push the off button. If a continuous red light is displayed on the transmitter, the programming procedure was successful. If a flashing red light is displayed, the procedure was unsuccessful, or the transmitter is not in range. In this case, make sure the transmitter is within the recommended range and repeat the above procedure from step 4.

2012.0 RANGE ROVER (LM), 412-02

AUXILIARY HEATING

DIAGNOSIS AND TESTING

For additional information.

REFER to: Climate Control System (412-00, Diagnosis and Testing).

2012.0 RANGE ROVER (LM), 412-02

AUXILIARY HEATING

DESCRIPTION AND OPERATION

COMPONENT LOCATION

NOTE:

RHD (right hand drive) installation shown, LHD (left hand drive) installation similar.

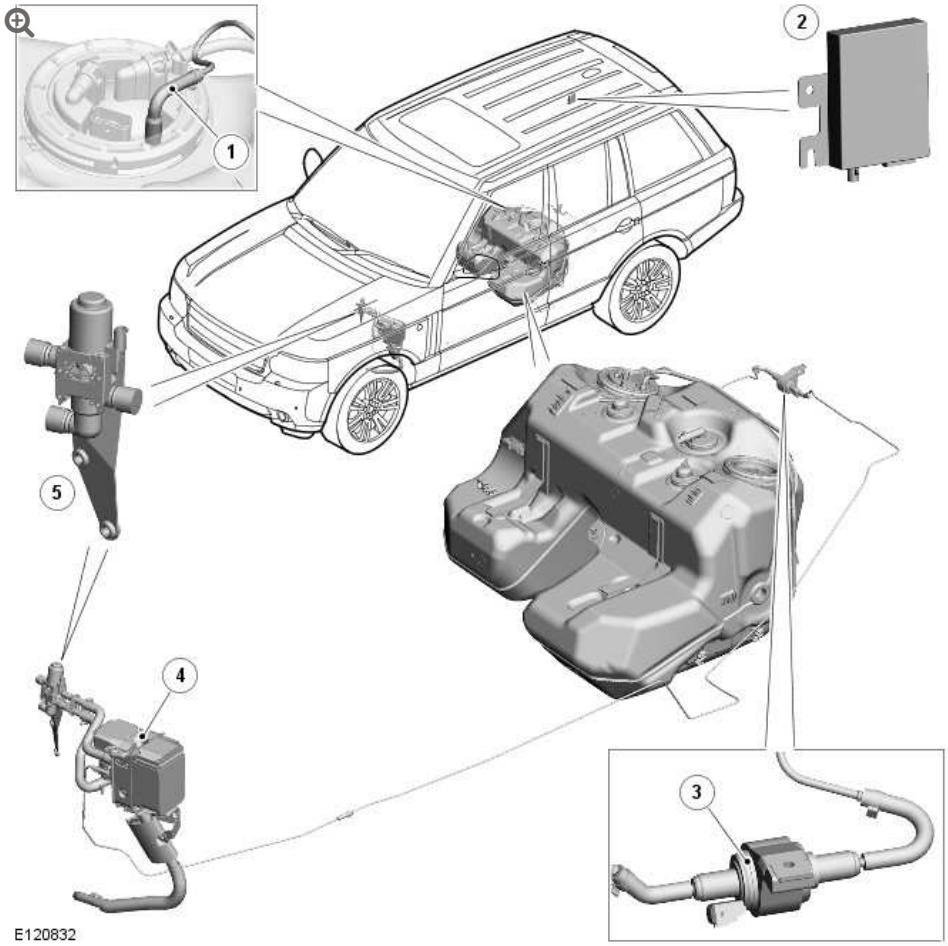

ITEM	DESCRIPTION
1	Fuel Fired Booster Heater (FFBH) fuel pipe tank connection
2	FFBH receiver
3	FFBH fuel pump
4	FFBH unit
5	Changeover valve

INTRODUCTION

Where fitted, auxiliary heating is provided by a FFBH, which boosts the temperature of the engine coolant. Fuel for the FFBH is taken from the vehicle fuel tank, through a fuel line attached to the fuel pump module. An auxiliary fuel pump supplies the fuel at low

pressure to the FFBH. In the FFBH, the fuel is burned and the resultant heat output is used to heat the engine coolant.

For remote operation, the system includes a FFBH receiver and a remote handset.

A changeover valve allows the heater coolant circuit to be isolated from the engine coolant circuit during parked heating, to reduce the warmup time of the passenger compartment.

A control module integrated into the FFBH unit controls the operation of the FFBH unit and the FFBH fuel pump. The ATC (automatic temperature control) module controls the changeover valve. System operation is initiated by:

- The CJB (central junction box), via the ATC module, for parked heating selections made on the TSD (touch screen display). For additional information, refer to: Audio System (415-01, Description and Operation).
- The remote handset, via the TV (television)) system antenna and antenna amplifier, and the FFBH receiver, for remote activation of parked heating.
- The ATC module, for additional heating while the engine is running.

FFBH FUEL PUMP

The FFBH fuel pump regulates the fuel supply to the FFBH unit. The FFBH fuel pump is installed in a rubber mounting attached to a bracket on the underside of the rear floor, immediately in front of the spare wheel well. The pump is a self priming, solenoid operated plunger pump. The control module in the FFBH unit outputs a PWM (pulse width modulation) signal to control the operation of the pump. When the pump is de-energized, it provides a positive shut-off of the fuel supply to the FFBH unit.

Sectioned View of FFBH Fuel Pump

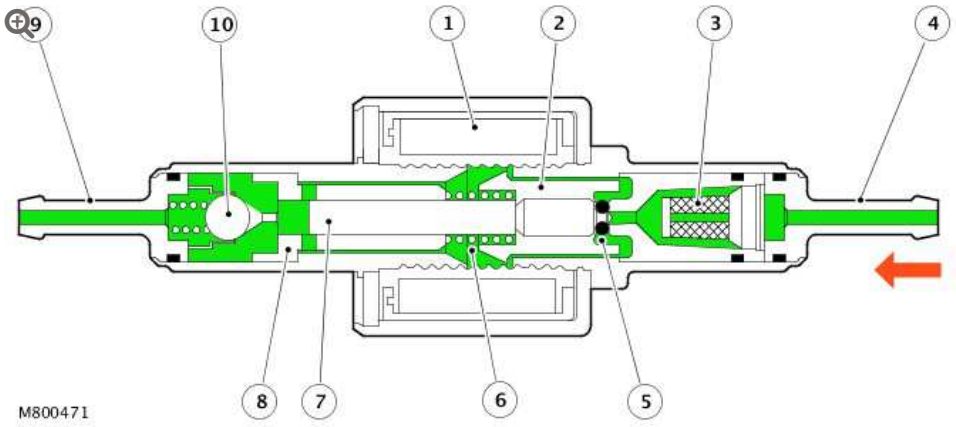

ITEM	DESCRIPTION
1	Solenoid coil
2	Plunger
3	Filter insert
4	Fuel line connector
5	O-ring seal
6	Spring
7	Piston
8	Bush
9	Fuel line connector
10	Non return valve

The solenoid coil of the FFBH fuel pump is installed around a housing, which contains a plunger and piston. The piston locates in a bush, and a spring is installed on the piston between the bush and the plunger. A filter insert and a fuel line connector are installed in the inlet end of the housing. A non return valve and a fuel line connector are installed in the fuel outlet end of the housing.

While the solenoid coil is de-energized, the spring holds the piston and plunger in the closed position at the inlet end of the housing. An

O-ring seal on the plunger provides a fuel tight seal between the plunger and the filter insert, preventing any flow through the pump. When the solenoid coil is energized, the piston and plunger move towards the outlet end of the housing, until the plunger contacts the bush; fuel is then drawn in through the inlet connection and filter. The initial movement of the piston also closes transverse drillings in the bush and isolates the pumping chamber at the outlet end of the housing. Subsequent movement of the piston then forces fuel from the pumping chamber through the non return valve and into the line to the FFBH unit. When the solenoid de-energizes, the spring moves the piston and plunger back towards the closed position. As the piston and plunger move towards the closed position, fuel flows past the plunger and through the annular gaps and transverse holes in the bush to replenish the pumping chamber.

FFBH UNIT

The FFBH unit is installed in the passenger side rear of the engine compartment, below the battery. It is connected in series with the coolant supply to the heater assembly. Two electrical connectors on the FFBH unit connect it to the vehicle wiring.

FFBH Unit Components

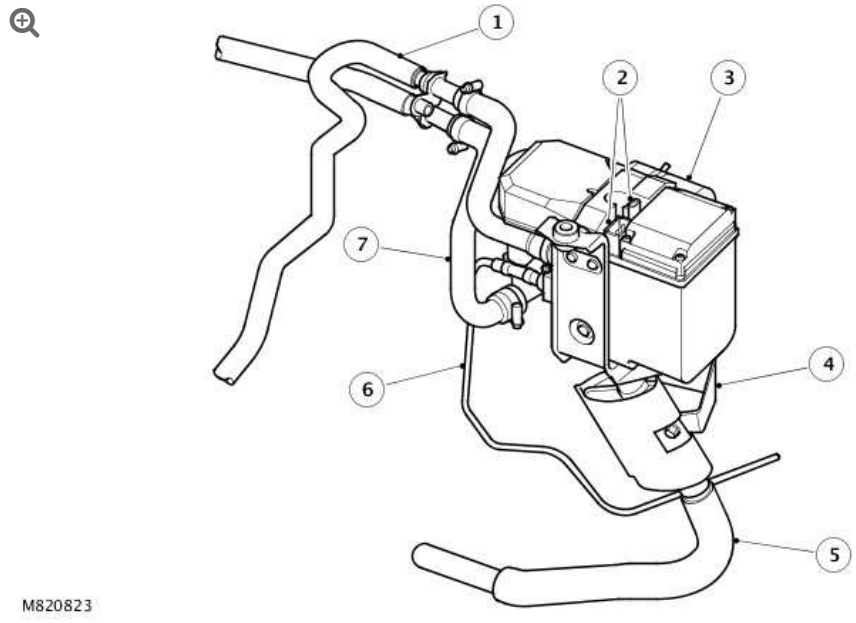

ITEM	DESCRIPTION
1	Coolant outlet hose
2	Electrical connectors
3	Air inlet filter
4	Mounting bracket
5	Exhaust pipe
6	Fuel supply line
7	Coolant inlet hose

Sectioned View of FFBH Unit

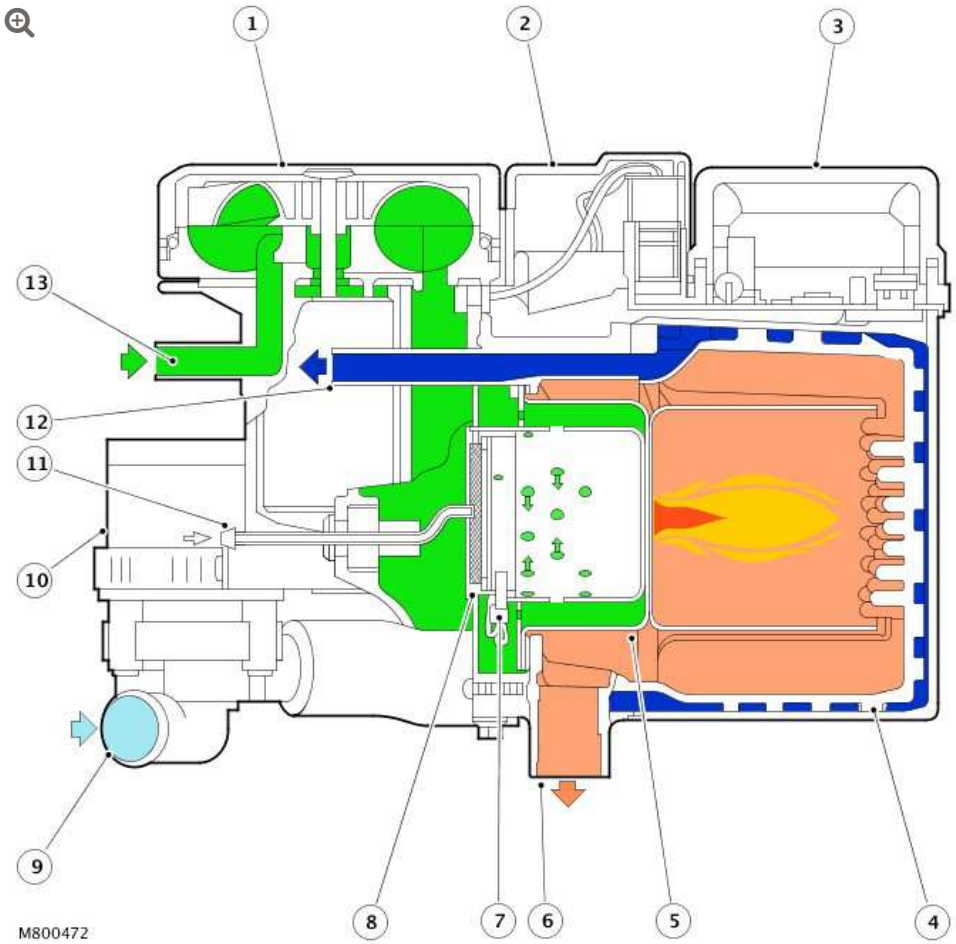

ITEM	DESCRIPTION
1	Combustion air fan
2	Burner housing
3	Control module
4	Heat exchanger
5	Burner insert
6	Exhaust
7	Glow plug/flame sensor
8	Evaporator
9	Coolant inlet
10	Circulation pump
11	Fuel inlet
12	Coolant outlet

ITEM	DESCRIPTION
13	Air inlet

CIRCULATION PUMP

The circulation pump is installed at the coolant inlet to the FFBH unit to assist the coolant flow through the FFBH unit and the heater assembly. The pump runs continuously while the FFBH unit is in standby or active operating modes. While the FFBH unit is inactive, coolant flow is reliant on the engine coolant pump and the auxiliary coolant pump.

COMBUSTION AIR FAN

The combustion air fan regulates the flow of air into the unit to support combustion of the fuel supplied by the FFBH pump and to purge and cool the FFBH unit. A canister type filter is included in the air inlet supply line to prevent particulates entering and contaminating the FFBH unit.

BURNER HOUSING

The burner housing contains the burner insert and also incorporates connections for the exhaust pipe, the coolant inlet from the circulation pump and the coolant outlet to the heater assembly. The exhaust pipe directs exhaust combustion gases to atmosphere through a pipe below the FFBH unit.

The burner insert incorporates the fuel combustion chamber, an evaporator and a glow plug/flame sensor. Fuel from the FFBH fuel pump is supplied to the evaporator, where it evaporates and enters the combustion chamber to mix with air from the combustion air fan. The glow plug/flame sensor provides the ignition source of the fuel:air mixture and, once combustion is established, monitors the flame.

CONTROL MODULE/HEAT EXCHANGER

The control module controls and monitors operation of the FFBH system. Ventilation of the control module is provided by an internal flow of air from the combustion air fan. The heat exchanger transfers heat generated by combustion to the coolant. A sensor in the heat exchanger provides the control module with an input of heat exchanger casing temperature, which the control module relates to coolant temperature and uses to control system operation. The temperature settings in the control module are calibrated to compensate for the difference between coolant temperature and the heat exchanger casing temperature detected by the sensor. Typically, as the coolant temperature increases, the coolant will be approximately 7 °C (12.6 °F) hotter than the temperature detected by the sensor; as the coolant temperature decreases, the coolant will be approximately 2 °C (3.6 °F) cooler than the temperature detected by the sensor.

CHANGEOVER VALVE

The changeover valve is a normally open solenoid valve installed between the supply and return sides of the heater coolant circuit. The changeover valve is located in the engine compartment on the engine bulkhead. When de-energized, the changeover valve connects the heater coolant circuit to the engine coolant circuit. When energized, the changeover valve isolates the heater coolant circuit from the engine coolant circuit.

The changeover valve is controlled by a power feed from the ATC module.

FFBH RECEIVER

The FFBH receiver translates the FFBH request radio signals, relayed from the TV antenna amplifier, into a voltage output to the FFBH unit. When a request for parked heating is received, the FFBH

receiver outputs a battery power feed to the FFBH unit. When a request to switch off parked heating is received, the FFBH receiver disconnects the power feed.

The FFBH receiver has a permanent power feed from the AJB (auxiliary junction box) and is connected to the TV antenna amplifier by a coaxial cable.

FFBH REMOTE HANDSET



ITEM	DESCRIPTION
1	On button
2	Off button
3	light emitting diode (LED)
4	Antenna

The FFBH remote handset allows parked heating to be remotely controlled up to a minimum of 100 m (328 ft) from the vehicle. On and off buttons activate and de-activate parked heating.

An LED (light emitting diode)flashes green when parked heating is active. If the LED flashes red after a start selection, then communication has not been established with the vehicle. If the LED flashes orange, the battery needs replacing.

The FFBH remote handset is powered by a 3.3 V CR1/3N battery located under a cover on the rear of the handset.

CONTROL DIAGRAM

NOTE:

A = Hardwired; B = K bus; D = High speed CAN (controller area network); F = RF transmission; N = Medium speed CAN bus; P = MOST ring; T = Coaxial cable.

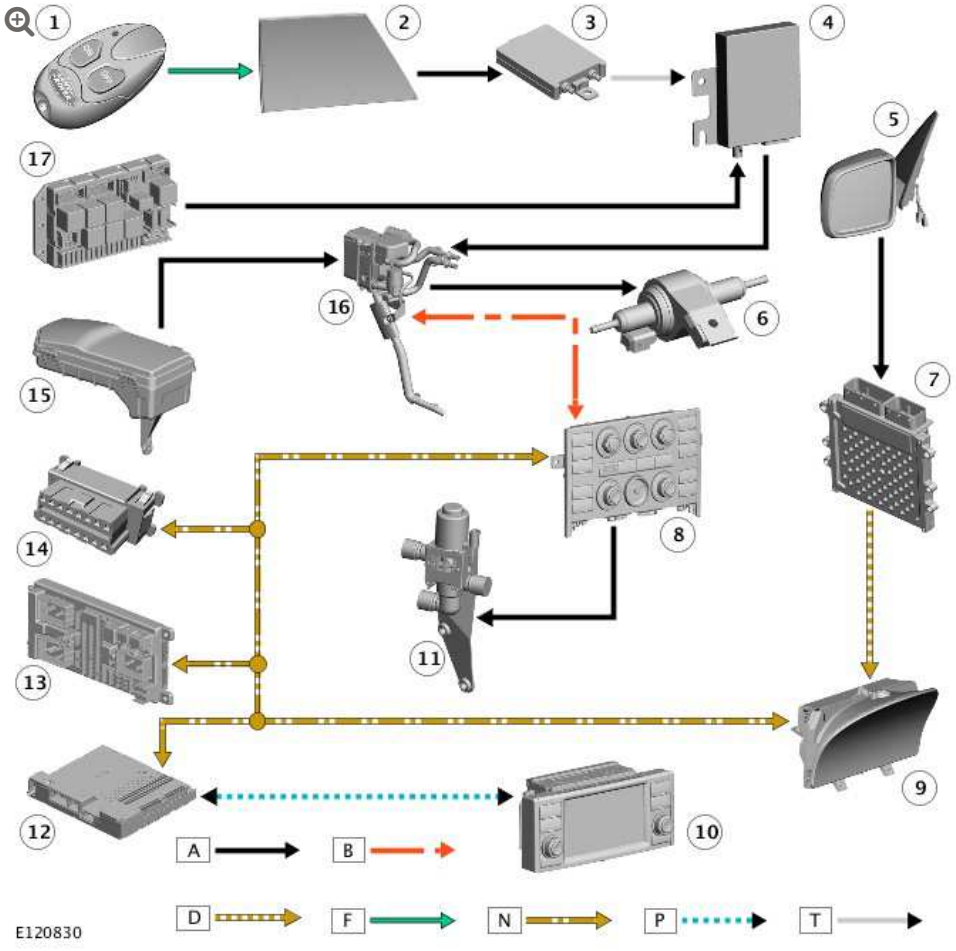

ITEM	DESCRIPTION
1	FFBH remote handset
2	RH side window antenna

ITEM	DESCRIPTION
3	TV antenna amplifier
4	FFBH receiver
5	LH door mirror (ambient air temperature sensor)
6	FFBH fuel pump
7	ECM
8	ATC module
9	Instrument cluster
10	TSD
11	Changeover valve
12	IHU
13	CJB (central junction box)
14	Diagnostic socket
15	EJB (engine junction box)
16	FFBH
17	AJB (auxiliary junction box)

OPERATION

The FFBH system operates in two modes:

- Parked heating, to heat the passenger compartment while the vehicle is parked with the engine off.
- Additional heating, to boost heater performance while the engine is running.

The ATC module disables FFBH operation if battery voltage is too low, as determined from an ambient air temperature dependent voltage map. Where fitted, the battery monitoring system can also

disable FFBH operation based on the battery charge state with the engine off.

During FFBH operation, with or without the engine running, the coolant valves of the climate control system remain de-energized and heater core temperature is directly related to the temperature of the coolant coming from the FFBH unit.

PARKED HEATING/VENTILATION

Parked heating works in conjunction with parked ventilation. When parked heating/ventilation is selected, the vehicle interior is either heated by parked heating or cooled by parked ventilation, depending on the ambient temperature. Parked heating occurs if the ambient temperature is less than 16 °C (61 °F); parked ventilation occurs if the ambient temperature is 16 °C (61 °F) or more.

Parked heating/ventilation is controlled by direct selection on the TSD, by using the TSD to program one or two on/off cycle start times in the following 24 hour period, or by using the FFBH remote handset. The direct selection and programmed time modes of operation are selected when the engine is stopped and the smart key is in the vehicle. The key can then be removed and the vehicle locked. In all operating modes, parked heating/ventilation is automatically de-activated after 30 minutes (20 minutes for UK diesel vehicles) to prevent excessive drain on the battery. Parked ventilation is automatically de-activated when the ignition is switched on.

When programmed start times for parked heating/ventilation are entered on the TSD, the times are stored in the CJB.

If the engine is started while parked heating is on:

- If the engine coolant temperature is equal to or more than the heater coolant temperature, parked heating is switched off.
- If the engine coolant temperature is less than the heater coolant temperature, parked heating remains on until the engine coolant

temperature reaches the heater coolant temperature. The changeover valve also remains closed until the engine coolant temperature reaches the heater coolant temperature, except on 5.0L vehicles, where the changeover valve is always open when the engine running (due to the positioning of the ECT (engine coolant temperature) sensor).

PROGRAMMED PARKED HEATING/VENTILATION

At a programmed parked heating/ventilation start time, the EJB (engine junction box) sends a start signal to the ATC module on the medium speed CAN.

On receipt of the message:

- If the ambient temperature is less than 16 °C (61 °F) and, on diesel models, more than -20 °C (-4 °F), the ATC module initiates parked heating and:
  - Energizes the changeover valve.
  - Sends a K bus message to activate the FFBH.
  - Operates the blower at 47% of the maximum speed.
  - Operates the distribution doors in the heater assembly to direct the air to the footwells for approximately 30 seconds, then to either only the windscreen, or to both the footwells and the windscreen, depending on the ambient air temperature.
  - Flashes the auto blower LED at 2 Hz.
  - On diesel models, if the ambient temperature is -20 °C (-4 °F) or below, the ATC module sends a K bus message to activate the FFBH, but leaves the changeover valve de-energized and does not operate the blower or distribution doors. Heated coolant is circulated around the engine and heater core(s) to heat the engine and improve engine starting.
- If the ambient temperature is 16 °C (61 °F) or more, the ATC module initiates parked ventilation and:

- Operates the blower at 47% of maximum speed.
- Operates the distribution doors in the heater assembly to direct the air to the face level outlets.
- Flashes the auto distribution LED at 2 Hz.

After 30 minutes (20 minutes for UK diesel vehicles), the ATC module stops the parked heating/ventilation:

- If parked heating is active, the ATC module:
  - Sends a K bus message to de-activate the FFBH.
  - Switches off the blower.
  - Returns the distribution doors to the previous settings.
  - After 3 minutes, de-energizes the changeover valve.
- If parked ventilation is active, the ATC module:
  - Switches off the blower.
  - Returns the distribution doors to the previous settings.

REMOTELY SELECTED PARKED HEATING/VENTILATION

When parked heating/ventilation is selected on with the remote handset, the request is received by the FFBH receiver via the TV antenna and TV antenna amplifier. The FFBH receiver relays the request as a hardwired signal to the FFBH control module. On receipt of the request, the FFBH control module sends the request to the ATC module on the K bus. The ATC module then determines if parked heating or ventilation is required and operates as detailed above.

Heater Coolant Circuit

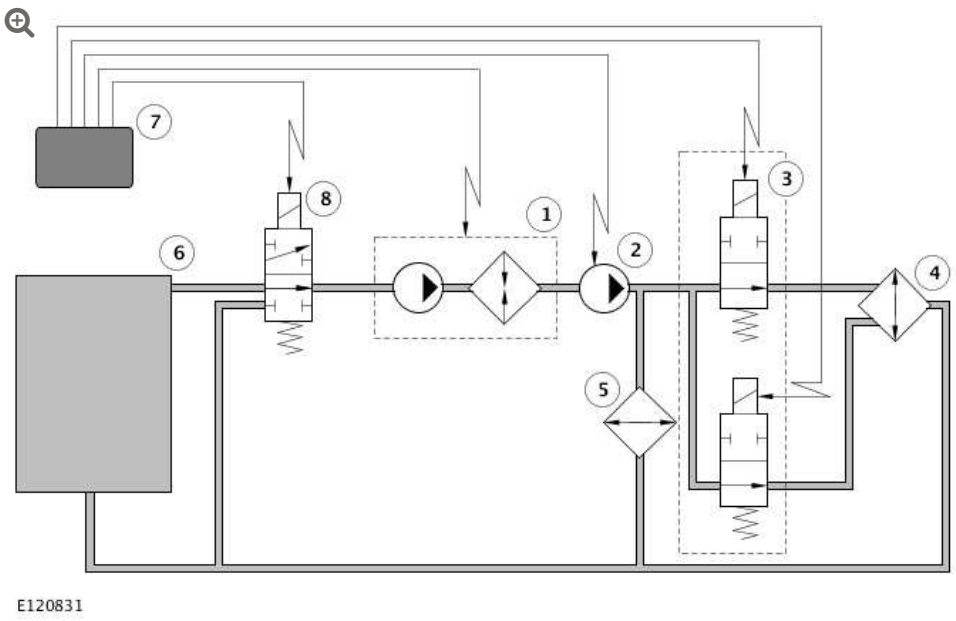

ITEM	DESCRIPTION
1	FFBH unit
2	Auxiliary coolant pump
3	Coolant valves
4	Heater core
5	Rear heater core (four zone climate control only)
6	Engine cooling system
7	ATC module
8	Changeover valve

ADDITIONAL HEATING

Additional heating reduces the heater warm-up time and is also used to maintain heater performance throughout the drive cycle.

The ATC module activates the additional heating mode when the engine is running and the following conditions coexist:

- The ambient temperature is less than 1 °C (34 °F) on petrol vehicles or 8 °C (41 °F) on diesel vehicles.

- The engine coolant temperature is less than 75 °C (167 °F).
- The heater coolant temperature is less than 70 °C (158 °F).
- The heat demand is more then 75%.
- The blower is on.

To activate the additional heating mode, the ATC module energizes the auxiliary coolant pump and sends a K bus message to the FFBH unit to start/continue operation (the changeover valve remains de-energized).

The ATC module stops the FFBH and de-energizes the auxiliary coolant pump when any of the following occur:

- The engine stops.
- The ambient temperature increases to more than 3 °C (37 °F) on petrol vehicles or 15 °C (59 °F) on diesel vehicles.
- The engine coolant temperature increases to more than 75 °C (167 °F).
- The heater coolant temperature increases to more than 70 °C (158 °F).
- The heat demand decreases to less than 70%.
- The blower is selected off.

FFBH UNIT

Once initiated by a message from the ATC module, FFBH operation is controlled by the control module in the FFBH unit. The control module controls the FFBH unit at one of two heat output levels, 2.5 kW at part load combustion and 5 kW at full load combustion.

Start Sequence

At the beginning of the start sequence the control module energizes the glow plug function of the glow plug/flame sensor, to preheat the

combustion chamber, starts the combustion air fan at slow speed and energizes the coolant circulation pump. After approximately 30 seconds, the control module energizes the FFBH fuel pump at the starting sequence speed. The fuel delivered by the FFBH fuel pump evaporates in the combustion chamber, mixes with air from the combustion air fan and is ignited by the glow plug/flame sensor. The control module then progressively increases the speed of the FFBH fuel pump and the combustion air fan. Once combustion is established the control module switches the glow plug/flame sensor from the glow plug function to the flame sensing function to monitor combustion. From the beginning of the start sequence to stable combustion takes approximately 90 seconds for a start to part load combustion and 150 seconds for a start to full load combustion.

Coolant Temperature Control

When the control module first enters the active mode, it initiates a start to full load combustion. Full load combustion continues until the heat exchanger casing temperature reaches 72 °C (162 °F), at this point the control module decreases the speed of the FFBH fuel pump and the combustion air fan to half speed, to produce part load combustion. The control module maintains part load combustion while the heat exchanger casing temperature remains between 68 and 76 °C (154 and 169 °F). If the heat exchanger casing temperature decreases to 68 °C (154 °F), the control module switches the system to full load combustion again. If the heat exchanger casing temperature increases to 76 °C (169 °F), the control module enters a control idle phase of operation.

On entering the control idle phase, the control module immediately switches the FFBH fuel pump off, to stop combustion, and starts a timer for the combustion air fan. After a 2 minute cool down period, the control module switches the combustion air fan off and then remains in the control idle phase while the heat exchanger casing temperature remains above 71 °C (160 °F). If the heat exchanger

casing temperature decreases to 71 °C (160 °F), within 15 minutes of the control module entering the control idle phase, the control module initiates a start to part load combustion. If more than 15 minutes elapse before the heat exchanger casing temperature decreases to 71 °C (160 °F), the control module initiates a start to full load combustion.

In order to limit the build up of carbon deposits on the glow plug/flame sensor, the control module also enters the control idle phase if the continuous part and/or full load combustion time exceeds 72 minutes. After the cool down period, if the heat exchanger casing is still in the temperature range that requires additional heat, the control module initiates an immediate restart to part or full load combustion as appropriate.

Shutdown

When the ATC module sends a K bus message to de-activate the FFBH operation, the control module de-energizes the FFBH fuel pump to stop combustion, but continues operation of the combustion air fan and the circulation pump to cool down the FFBH unit. The cool down time depends on the combustion load at the time the message is received.

COMBUSTION LOAD	COOL DOWN TIME, SECONDS
Part	100
Full	175

Diagnostics

The control module monitors the FFBH system for faults. Up to six FFBH faults can be stored in a volatile memory in the control module, and up to 10 FFBH faults together with freeze frame data can be stored in the ATC module. If a further fault is detected, the oldest

fault is overwritten by the new fault. The fault data can be retrieved using the Land Rover approved diagnostic equipment.

The control module also incorporates an error lockout mode of operation that inhibits system operation to prevent serious faults from causing further damage to the system. In the error lockout mode, the control module immediately stops the FFBH fuel pump, and stops the combustion air fan and circulation pump after a cool down time of approximately 2 minutes. Error lockout occurs for start sequence failures and/or combustion flameouts, heat exchanger casing overheat and out of limit input voltage. The error lockout mode can be cleared using the Land Rover approved diagnostic system, or by disconnecting the battery power supply for a minimum of 10 seconds.

Start Failure/Flameout: If a start sequence fails to establish combustion, or a flameout occurs after combustion is established, the control module immediately initiates another start sequence. The start failure or flameout is also recorded by an event timer in the control module. The event timer is increased by one after each start failure or flameout, and decreased by one if a subsequent start is successful. If the event timer increases to three (over any number of drive cycles), the control module enters the error lockout mode.

Heat Exchanger Casing Overheat: To protect the system from excessive temperatures, the control module enters the error lockout mode if the heat exchanger casing temperature exceeds 105 °C (221 °F).

Out of Limit Voltage: The control module enters the error lockout mode if the battery or alternator power input is less than 10.5 ± 0.3 V for more than 20 seconds, or more than 15.5 ± 0.5 V for more than 6 seconds.

AUXILIARY HEATING

FUEL FIRED BOOSTER HEATER – V8 5.0L PETROL/V8 S/C 5.0L PETROL (G1393689)

REMOVAL AND INSTALLATION

80.40.01	FUEL FIRED BOOSTER HEATER (FFBH) - RENEW	5000 CC, AJ V8	2	USED WITHINS	+
80.40.01	FUEL FIRED BOOSTER HEATER (FFBH) - RENEW	AJ V8, SUPERCHARGED	1.3	USED WITHINS	+

REMOVAL

CAUTIONS:

- RHD illustration shown, LHD is similar.
- Make sure that all openings are sealed. Use new blanking caps.

NOTE:

Removal steps in this procedure may contain installation details.

1. Disconnect the battery ground cable.
   Refer to: Specifications (414-00, Specifications).

2. **WARNING:**

   Make sure to support the vehicle with axle stands.

   Raise and support the vehicle.

3. Refer to: Fender Splash Shield (501-02 Front End Body Panels, Removal and Installation).

4. Refer to: Cooling System Draining, Filling and Bleeding - V8 5.0L Petrol (303-03 Engine Cooling - V8 5.0L Petrol/V8 S/C 5.0L Petrol, General Procedures).
   Refer to: Cooling System Draining, Filling and Bleeding - V8 S/C 5.0L Petrol (303-03 Engine Cooling - V8 5.0L Petrol/V8 S/C 5.0L Petrol, General Procedures).

5.

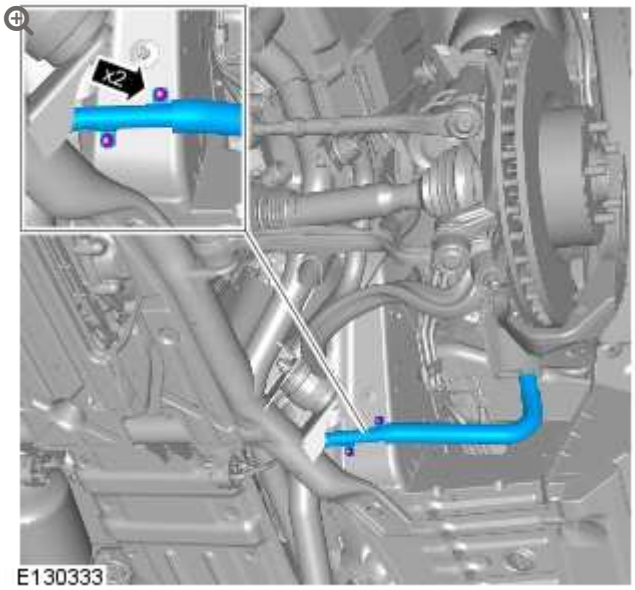

Torque: **10 Nm**

6.

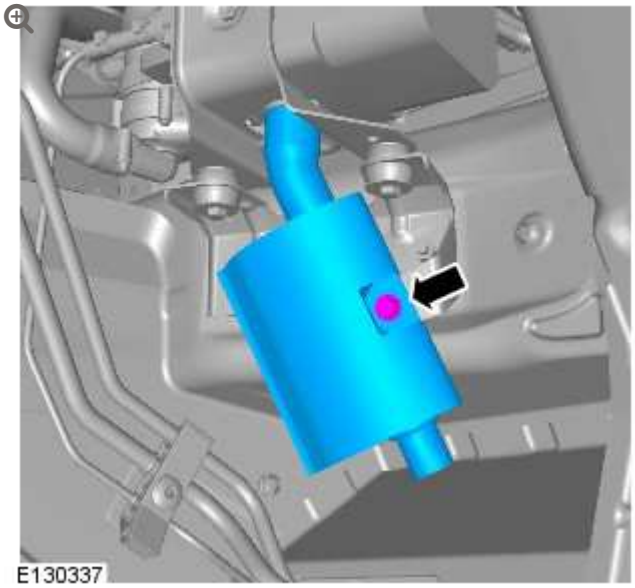

Torque: **10 Nm**

7.

CAUTION:

Be prepared to collect escaping fluids.

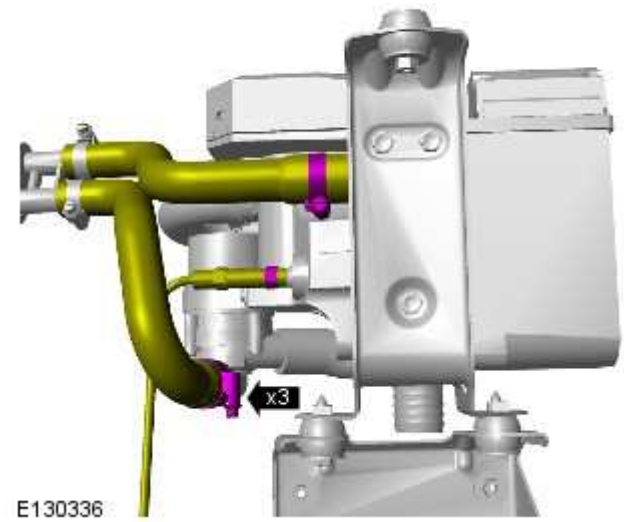

8.

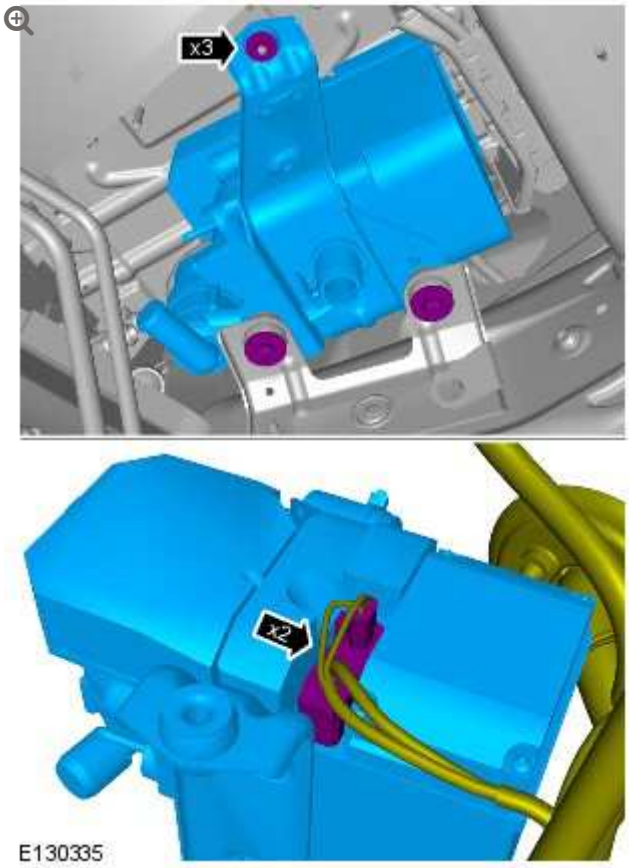

Torque: **10 Nm**

9.

NOTE:

Do not disassemble further if the component is removed for access only.

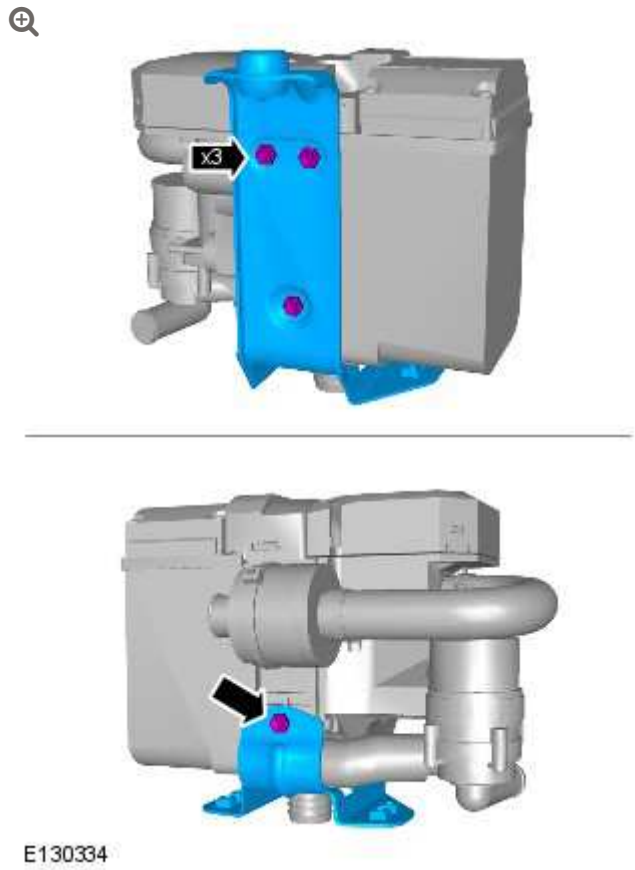

Torque: **10 Nm**

INSTALLATION

1. To install, reverse the removal procedure.
2. **NOTE:**

   Only carry out this step if a new fuel fired booster heater (FFBH) has been installed.

Using the Land Rover approved diagnostic system, follow the on-screen instructions and configure the auxiliary heater control module (AHCM).

3. Connect the Land Rover approved diagnostic equipment to the vehicle and carry out the Fuel fired burner heater activation test.

2012.0 RANGE ROVER (LM), 412-02

AUXILIARY CLIMATE CONTROL

DESCRIPTION AND OPERATION

COMPONENT LOCATION

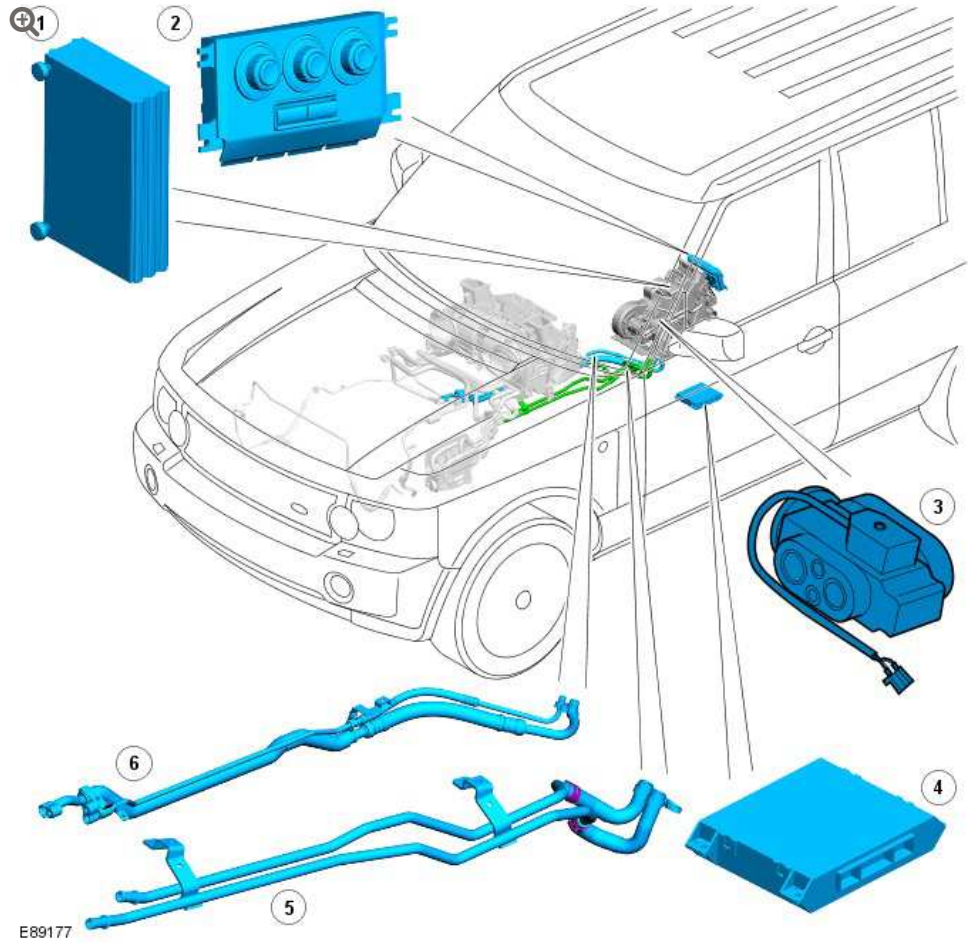

ITEM	DESCRIPTION
1	Evaporator

ITEM	DESCRIPTION
2	Rear climate control panel
3	Magnetic valve
4	Rear climate control module
5	Heater pipes
6	Refrigerant lines

2012.0 RANGE ROVER (LM), 412-02

AUXILIARY CLIMATE CONTROL

DESCRIPTION AND OPERATION

COMPONENT LOCATION – RANGE ROVER ULTIMATE

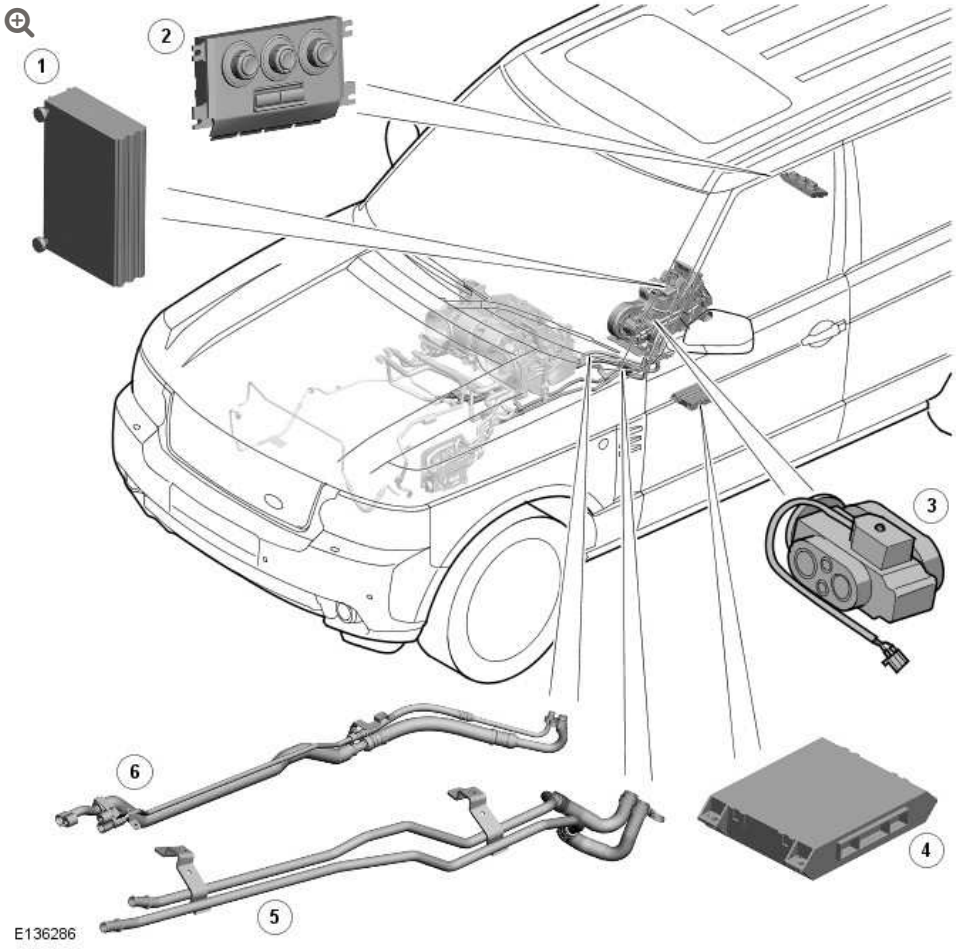

ITEM	DESCRIPTION

ITEM	DESCRIPTION
1	Evaporator
2	Rear climate control panel
3	Magnetic valve
4	Rear climate control module
5	Heater pipes
6	Refrigerant lines

GENERAL

The auxiliary climate control on Range Rover Ultimate is the standard rear climate control, with the exception that the rear climate control panel is relocated into the rear floor console.

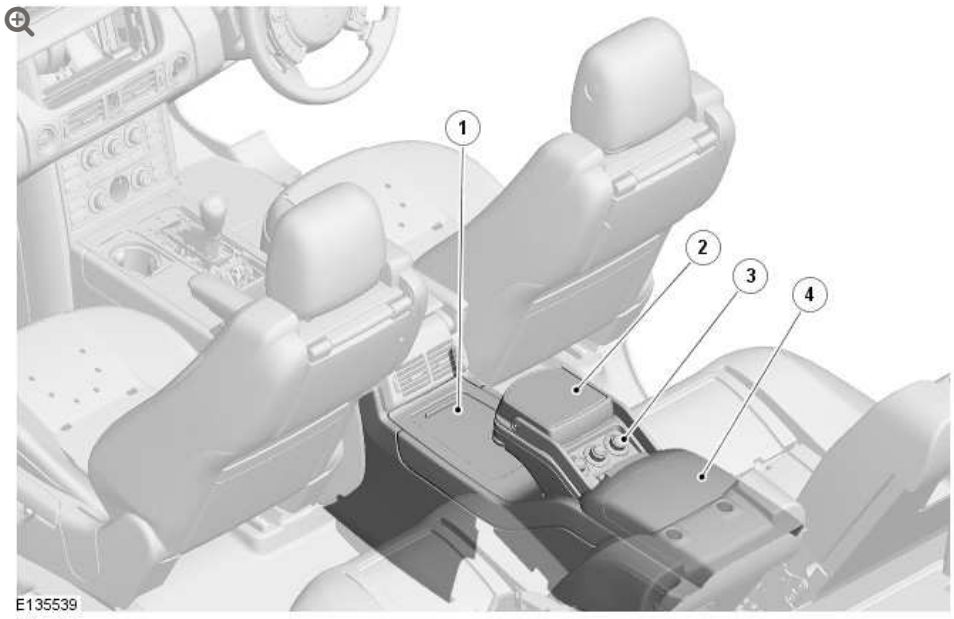

ITEM	DESCRIPTION
1	Chiller unit (ref only)
2	Table (ref only)
3	Rear climate control panel
4	Rear stowage box (ref only)

The rear floor console harness has a short link harness which connects from the existing harness connector in the rear of the front floor console to the rear climate control panel. The panel and its operation are unchanged.

AIR CONDITIONING

SPECIFICATIONS

Lubricant

NOTE:

All compressors are supplied with 110ml oil. Any system that requires more than 110ml, including dual evaporator systems, will have had the additional amount added during vehicle build.

ITEM	ENGINE 3.6D	ENGINE 4.4D	ENGINE 5.0L
Air conditioning (A/C) compressor oil type	Sanden SP-10 PAG oil	Sanden SP-10 PAG oil	Sanden SP-10 PAG oil
A/C compressor oil - vehicles fitted with 2 zone	120 cm^3	110 cm^3	110 cm^3
A/C compressor oil - vehicles fitted with 4 zone	170 cm^3	200 cm^3	200 cm^3

Refrigerant

ITEM	SPECIFICATION
Refrigerant type	R134A

Capacity

ITEM	ENGINE 3.6D	ENGINE 4.4D	ENGINE 5.0L
Refrigerant - vehicles fitted with 2 zone	700 grammes	700 grammes	750 grammes
Refrigerant - vehicles fitted with 4 zone	880 grammes	880 grammes	930 grammes

Torque Specifications

DESCRIPTION	NM	LB-FT	LB-IN
A/C compressor mounting bolts	25	18	-
A/C compressor manifold and tube retaining bolt	9	-	80
A/C line to bulkhead bolts	18	13	-
Thermostatic expansion valve (TXV) to refrigerant line clamp bolts	6	-	53
A/C line to compressor nuts	18	13	-
A/C line to condenser bolts	18	13	-
A/C refrigerant line to front evaporator nut - vehicles fitted with 4 zone	9	-	80
A/C refrigerant line to front evaporator bolt - vehicles fitted with 4 zone	18	13	-
A/C lines to rear evaporator bolts - vehicles fitted with 4 zone	9	-	80

AIR CONDITIONING (A/C) COMPRESSOR – V8 S/C 5.0L PETROL (G1230282)

REMOVAL AND INSTALLATION

REMOVAL

NOTE:

Some variation in the illustrations may occur, but the essential information is always correct.

1. Disconnect the battery ground cable.
   Refer to: Specifications (414-00 Charging System - General Information, Specifications).

2. Refer to: Air Conditioning (A/C) System Recovery, Evacuation and Charging (412-00 Climate Control System - General Information, General Procedures).

3.

WARNING:

Make sure to support the vehicle with axle stands.

Raise and support the vehicle.

4.

CAUTION:

LH illustration shown, RH is similar.

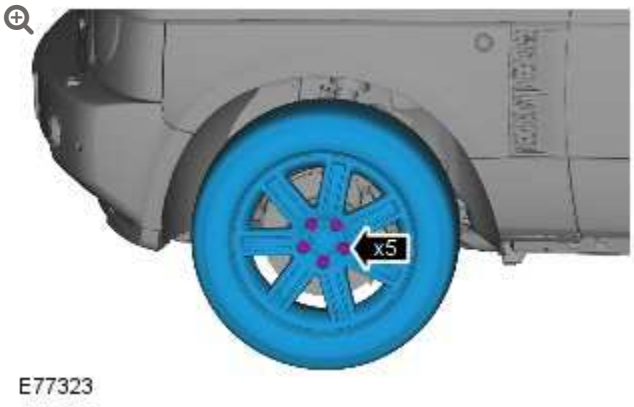

Torque: **140 Nm**

5. Refer to: Steering Gear - 5.0L SC V8 - AJ133, LHD AWD (211-02 Power Steering, Removal and Installation).

6.

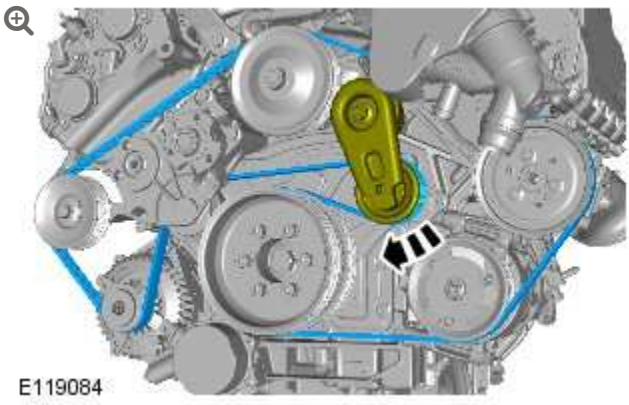

7.

CAUTIONS:

- Make sure that all openings are sealed. Use new blanking caps.
- A new O-ring seal is to be installed.

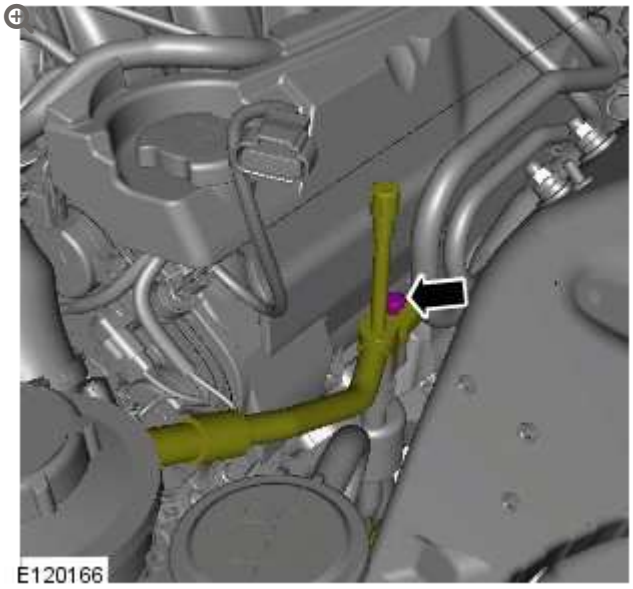

Torque: **18 Nm**

8.

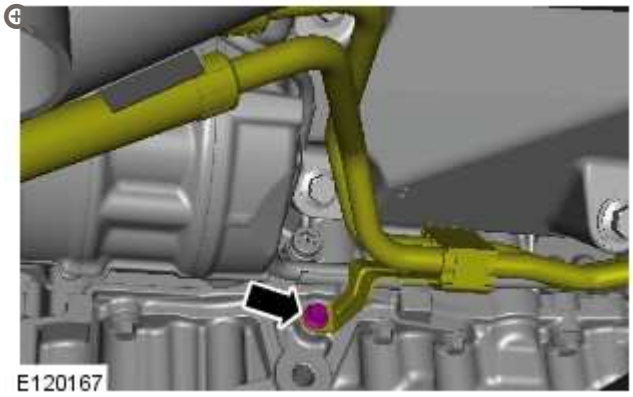

Torque: **25 Nm**

9.

CAUTIONS:

- Make sure that all openings are sealed. Use new blanking caps.
- A new O-ring seal is to be installed.

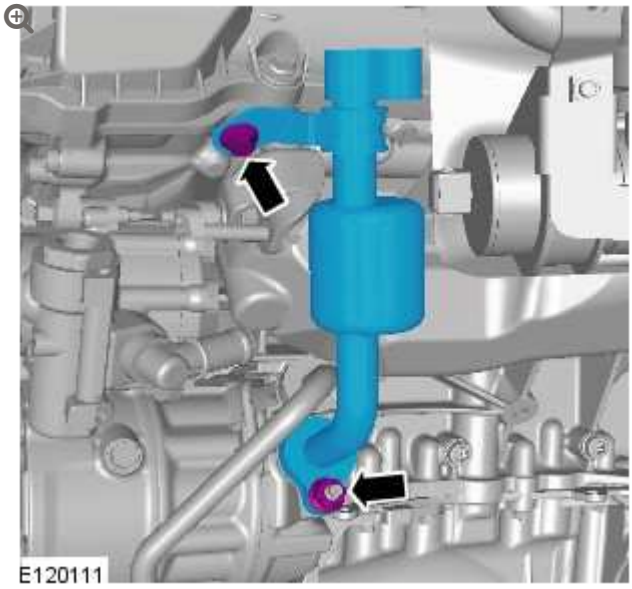

Torque:

M8 nut **9 Nm**

M8 **25 Nm**

10.

CAUTIONS:

- Make sure that all openings are sealed. Use new blanking caps.
- A new O-ring seal is to be installed.

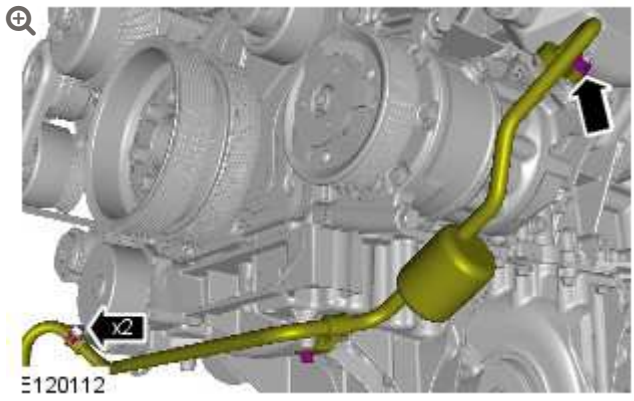

Torque:

M8 nut **9 Nm**

M8 **9 Nm**

11.

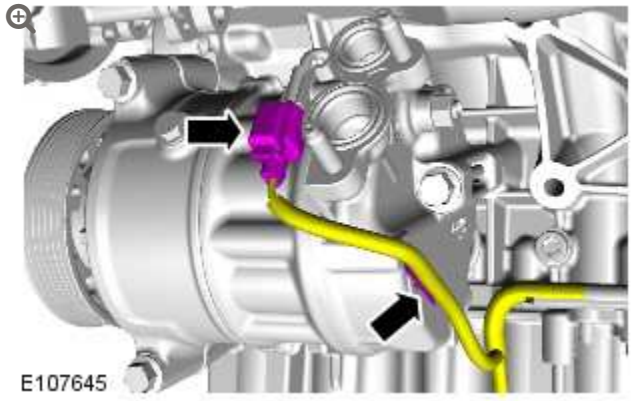

12.

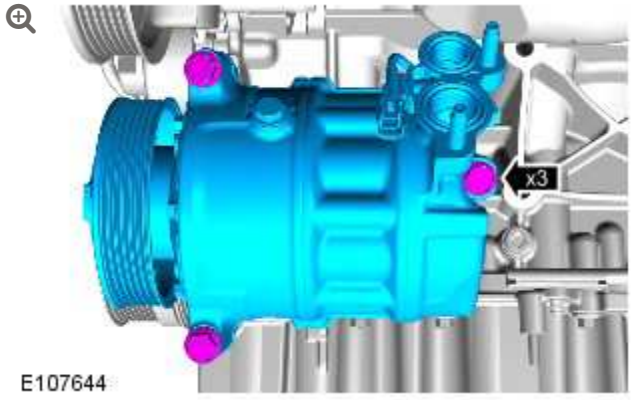

Torque: **25 Nm**

INSTALLATION

1. To install, reverse the removal procedure.

2012.0 RANGE ROVER (LM), 412-03

AIR CONDITIONING

DESCRIPTION AND OPERATION

COMPONENT LOCATION - 3.6L TdV8

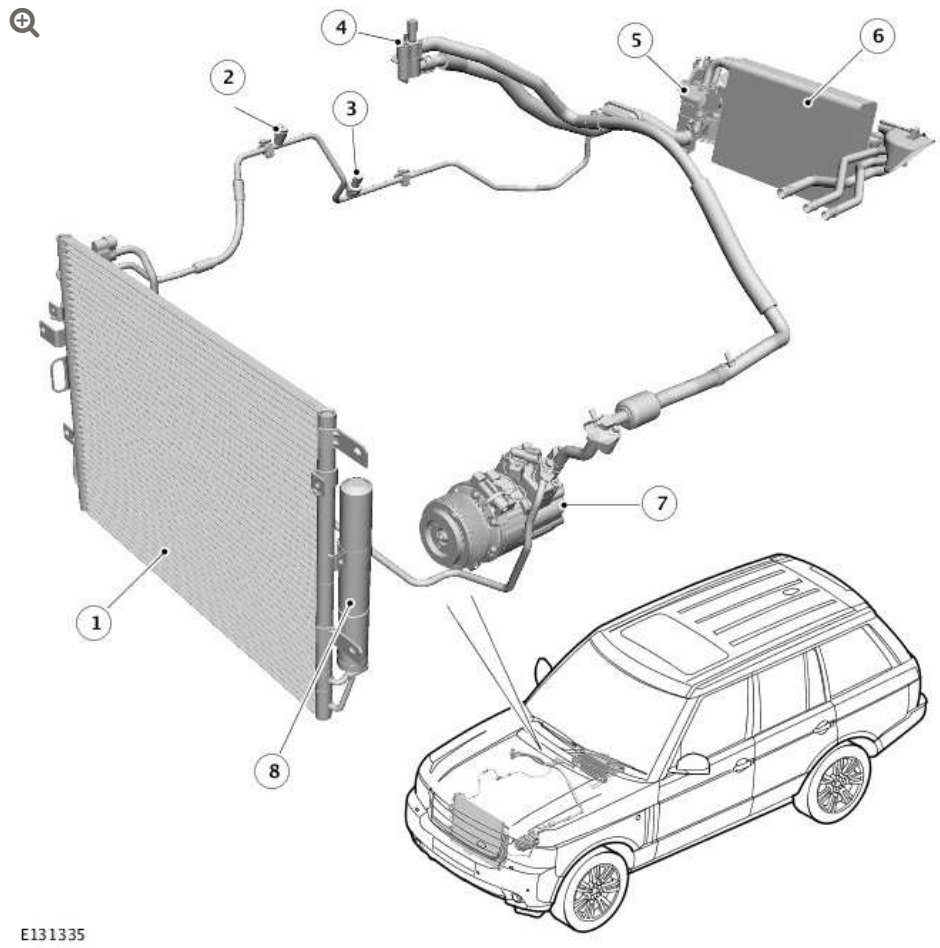

ITEM	DESCRIPTION
1	Condenser
2	High pressure servicing connection
3	Refrigerant pressure sensor

ITEM	DESCRIPTION
4	Low pressure servicing connection
5	Thermostatic expansion valve
6	Evaporator
7	air conditioning (A/C) compressor
8	Receiver drier module

COMPONENT LOCATION - 5.0L V8

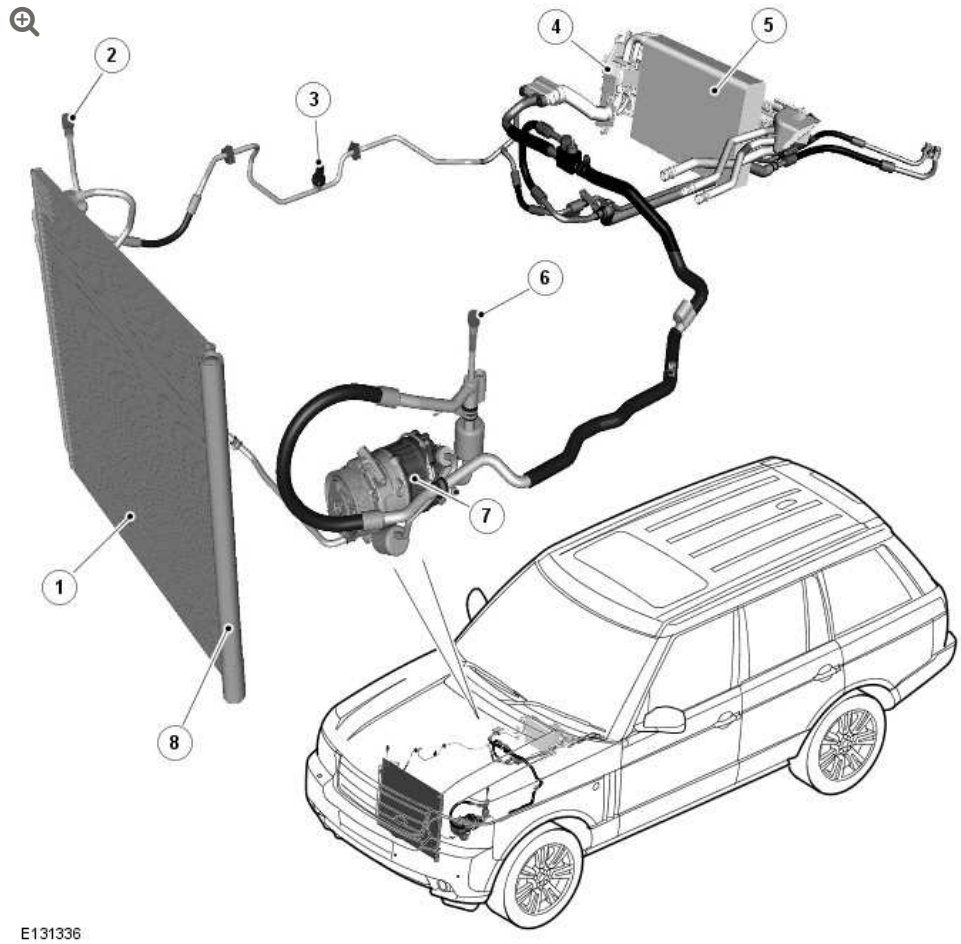

ITEM	DESCRIPTION
1	Condenser
2	Low pressure servicing connection
3	Refrigerant pressure sensor (reference)
4	Thermostatic expansion valve

ITEM	DESCRIPTION
5	Evaporator
6	High pressure servicing connection
7	air conditioning (A/C) compressor
8	Receiver drier module

COMPONENT LOCATION - 4.4L TdV8

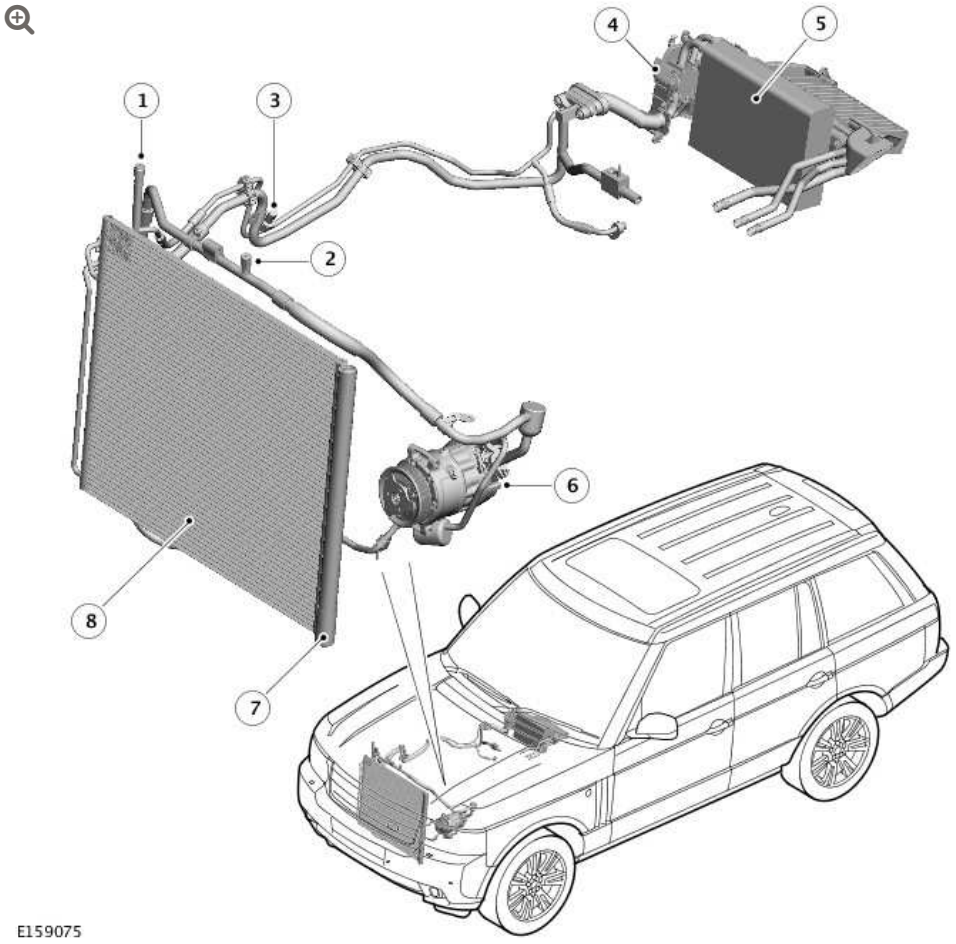

ITEM	DESCRIPTION
1	Low pressure servicing connection
2	High pressure servicing connection
3	Refrigerant pressure sensor (reference)
4	Thermostatic expansion valve
5	Evaporator

ITEM	DESCRIPTION
6	air conditioning (A/C) compressor
7	Receiver drier module
8	Condenser

OVERVIEW

The A/C system transfers heat from the vehicle interior to the outside atmosphere to provide the heater assembly with dehumidified cool air. The system is a sealed, closed loop, filled with a charge weight of R134a refrigerant as the heat transfer medium. Oil is added to the refrigerant to lubricate the internal components of the A/C compressor.

To accomplish the transfer of heat, the refrigerant is circulated around the system, where it passes through 2 pressure/temperature regimes. In each of the pressure/temperature regimes, the refrigerant changes state, during which process maximum heat absorption or release occurs. The low pressure/temperature regime is from the thermostatic expansion valve, through the evaporator to the A/C compressor; the refrigerant decreases in pressure and temperature at the thermostatic expansion valve, then changes state from liquid to vapor in the evaporator, to absorb heat. The high pressure/temperature regime is from the A/C compressor, through the condenser and receiver drier to the thermostatic expansion valve; the refrigerant increases in pressure and temperature as it passes through the A/C compressor, then releases heat and changes state from vapor to liquid in the condenser.

Some vehicles may be fitted with a 4 zone climate control system. For additional information, refer to: Auxiliary Heater (412-02B Auxiliary Heating, Description and Operation).

A/C COMPRESSOR

The A/C compressor circulates refrigerant around the system by compressing low pressure, low temperature vapor from the evaporator and discharging the resultant high pressure, high temperature vapor to the condenser. Although similar in appearance, the A/C compressor installed on 3.6L TdV8 vehicles differs slightly to the one installed on 5.0L V8 and 4.4L TdV8 vehicles.

3.6L TdV8 A/C Compressor

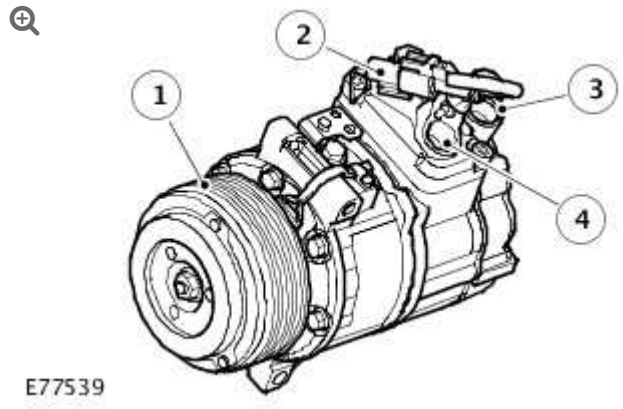

ITEM	DESCRIPTION
1	Pulley
2	Electrical connector
3	Inlet port
4	Outlet port

The A/C compressor fitted to 3.6L TdV8 diesel vehicles is a variable displacement unit. The secondary accessory drive belt, driven by the engine crankshaft, drives the A/C compressor via a pulley.

The A/C compressor is a 7 cylinder swash plate unit with a minimum displacement of 5.5 cm^3/rev (0.34 in^3/rev) and maximum displacement of 171 cm^3/rev (10.4 in^3/rev). A control valve in the A/C compressor automatically adjusts the displacement (i.e. flow of refrigerant), between the minimum and maximum values, to match the thermal load of the evaporator. By matching the refrigerant flow

to the thermal load of the evaporator, the variable A/C compressor maintains a relatively constant evaporator temperature of approximately 3 to 4°C (37 to 39°F).

To protect the refrigerant system from unacceptably high pressure, a pressure relief valve is installed in the outlet side of the A/C compressor. The pressure relief valve is set to open at 3.5 to 4.1 MPa (508 to 595 lbf/in^2) and vents excess pressure into the engine compartment. The pressure relief valve closes again when the pressure decreases to 3.01 MPa (437 lbf/in^2).

The pulley of the A/C compressor incorporates a mechanical torque limiter, which disconnects the drive plate from the compressor shaft if torque increases to a level that indicates imminent compressor seizure.

5.0L V8 and 4.4L TdV8 A/C Compressor

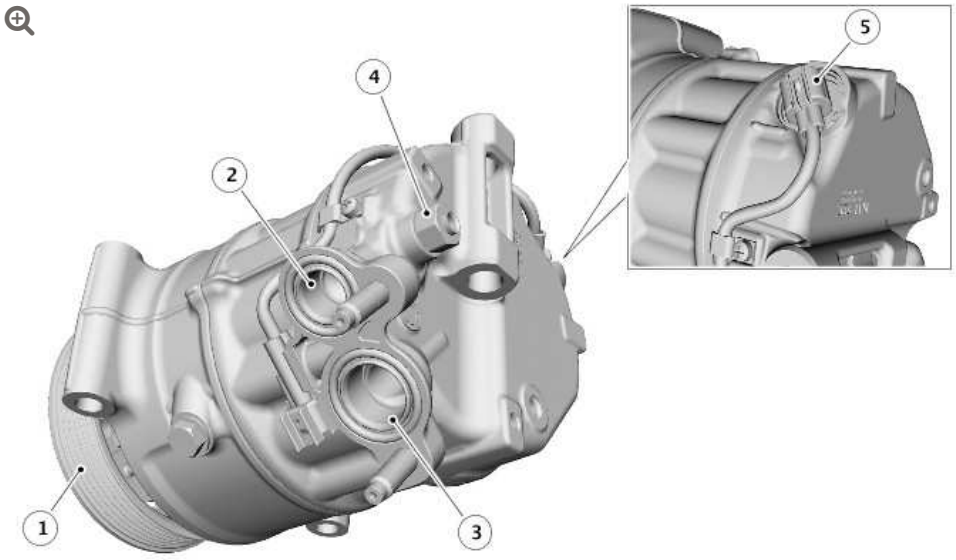

E131337

ITEM	DESCRIPTION
1	Pulley
2	Outlet port
3	Inlet port

ITEM	DESCRIPTION
4	Pressure relief valve
5	Electronic control valve connector

The A/C compressor fitted to 5.0 V8 petrol and 4.4L TdV8 vehicles is a variable displacement unit. The secondary accessory drive belt, driven by the engine crankshaft, drives the A/C compressor via a pulley. Operation of the compressor is controlled by an electronic control valve working in conjunction with the ATC (automatic temperature control) module.

The A/C compressor is a 7 cylinder swash plate unit with a minimum displacement of 1.6 cm^3/rev (0.10 in^3/rev) and maximum displacement of 163 cm^3/rev (9.95 in^3/rev). The ATC automatically adjusts the displacement of the A/C compressor between the minimum and maximum values, to match the thermal load of the evaporator. By matching refrigerant flow and the thermal load of the evaporator, the ATC maintains cabin comfort whilst also considering fuel economy.

To protect the refrigerant system from unacceptably high pressure, a pressure relief valve is installed in the outlet side of the A/C compressor. The pressure relief valve is set to open at 3.5 to 4.1 MPa (508 to 595 lbf/in^2) and vents excess pressure into the engine compartment. The pressure relief valve closes again when the pressure decreases to 3.1 MPa (449 lbf/in^2).

The pulley of the A/C compressor incorporates a mechanical torque limiter, which disconnects the drive plate from the compressor shaft if torque increases to a level that indicates imminent compressor seizure.

CONDENSER AND RECEIVER DRIER

Condenser - 3.6L TdV8

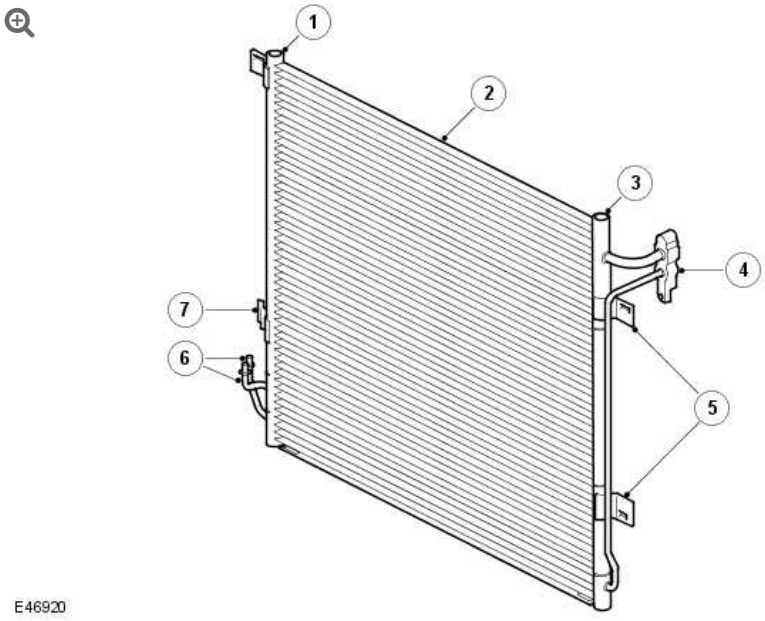

ITEM	DESCRIPTION
1	right-hand (RH) end tank
2	Condenser core
3	left-hand (LH) end tank
4	High pressure line connector block
5	Condenser attachment brackets
6	Receiver drier pipes
7	Receiver drier attachment bracket

Receiver Drier - 3.6L TdV8

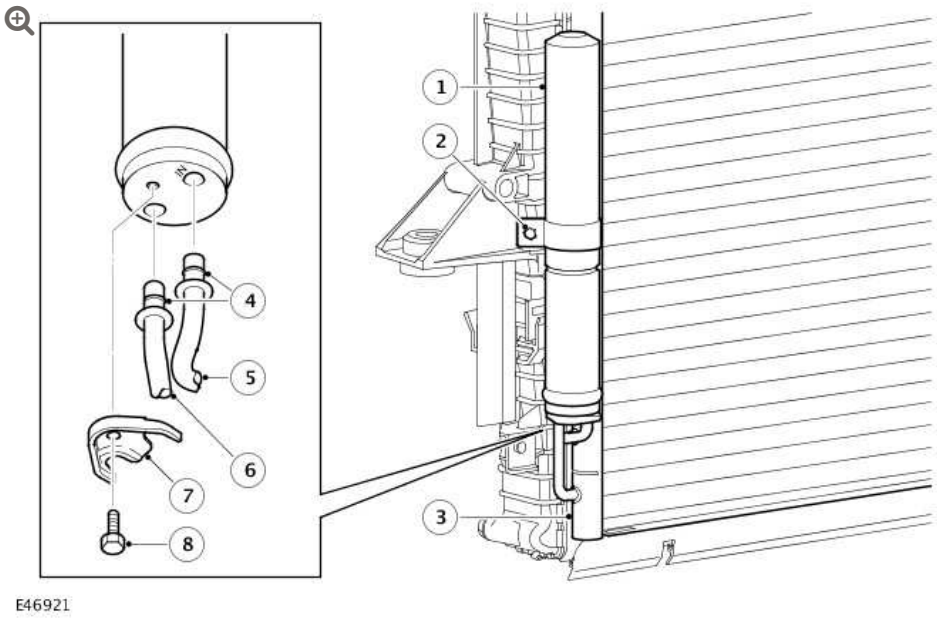

ITEM	DESCRIPTION
1	Receiver Drier
2	Clamp
3	Condenser RH end tank
4	O-ring seals
5	Inlet pipe
6	Outlet pipe
7	Collar
8	Bolt

Condenser and Receiver Drier - 5.0L V8 and 4.4L TdV8

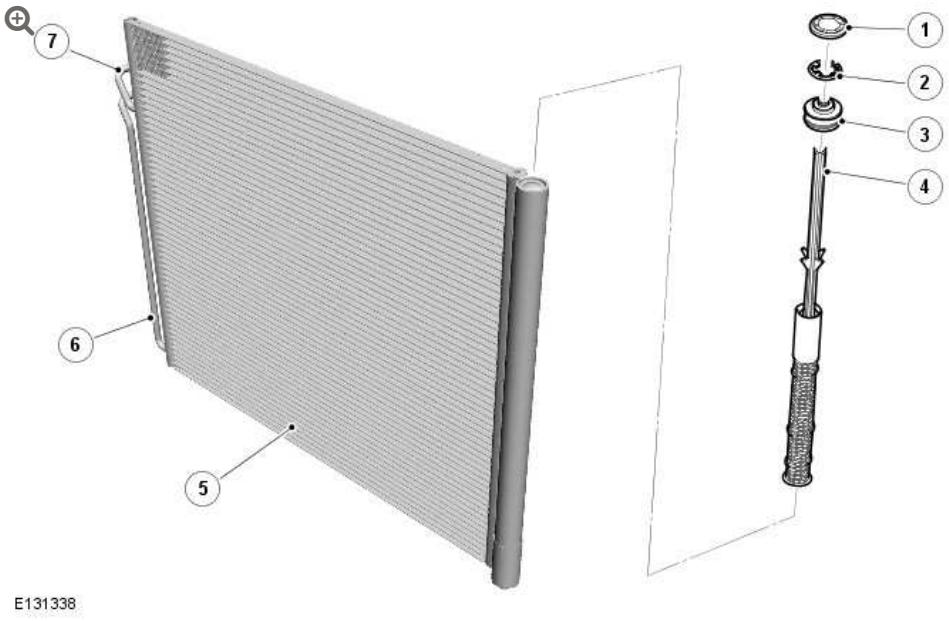

ITEM	DESCRIPTION
1	Cap
2	Spring clip
3	Sealing plug
4	Desiccant module
5	Condenser
6	Outlet pipe
7	Inlet pipe

The condenser transfers heat from the refrigerant to the surrounding air to convert the vapor from the A/C compressor into a liquid. A receiver drier module, integrated onto the LH side of the condenser, incorporates a filter and a desiccant to remove solid impurities and moisture from the refrigerant. The receiver drier module also functions as a reservoir for liquid refrigerant, to accommodate changes of heat load at the evaporator.

The condenser is installed immediately in front of the radiator.

The condenser is classified as a multiflow condenser and consists of a fin and tube heat exchanger installed between two end tanks.

3.6L TDV8

Divisions in the end tanks separate the heat exchanger into a four pass upper (condenser) section and a two pass lower (sub-cooler) section. A connector block on the left end tank of the condenser provides connections for the high pressure lines from the A/C (air conditioning) compressor and the evaporator. Two pipes at the bottom of the right end tank of the condenser provide connections for the receiver drier.

5.0L V8 AND 4.4L TDV8

Divisions in the end tanks separate the heat exchanger into a three pass upper (condenser) section and a single pass lower (sub-cooler) section, which are interconnected by the receiver drier module. The desiccant cluster and the filter in the receiver drier module are serviceable items retained in position by a threaded plug.

THERMOSTATIC EXPANSION VALVE

The thermostatic expansion valve meters the flow of refrigerant into the evaporator, to match the refrigerant flow with the heat load of the air passing through the evaporator matrix.

The temperature and pressure of the refrigerant leaving the evaporator act on the thermostatic expansion valve to control the volume of refrigerant flowing through the evaporator. The warmer the air flowing through the evaporator matrix, the more heat available to evaporate refrigerant and thus the greater the volume of refrigerant allowed through the metering valve.

EVAPORATOR

Evaporator and Thermostatic Expansion Valve

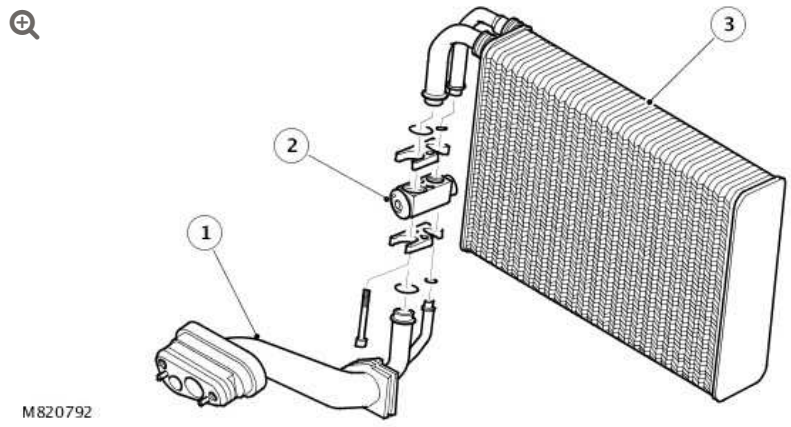

ITEM	DESCRIPTION
1	Insulated connection pipes
2	Thermostatic expansion valve
3	Evaporator

The evaporator is installed in the heater assembly between the blower and the heater matrix, to absorb heat from the exterior or recirculated air. Low pressure, low temperature refrigerant changes from liquid to vapor in the evaporator, absorbing large quantities of heat as it changes state.

Most of the moisture in the air passing through the evaporator condenses into water, which drains through the floorpan to the underside of the vehicle through two drain tubes.

REFRIGERANT LINES

To maintain similar flow velocities around the system, the diameter of the refrigerant lines varies to suit the two pressure/temperature regimes. The larger diameters are installed in the low pressure/temperature regime and the smaller diameters are installed in the high pressure/temperature regime.

Low and high pressure charging connections are incorporated into the refrigerant lines near the front RH corner of the engine compartment.

CONTROL DIAGRAM

NOTE:

NOTE: A = Refrigerant liquid; B = Refrigerant vapor

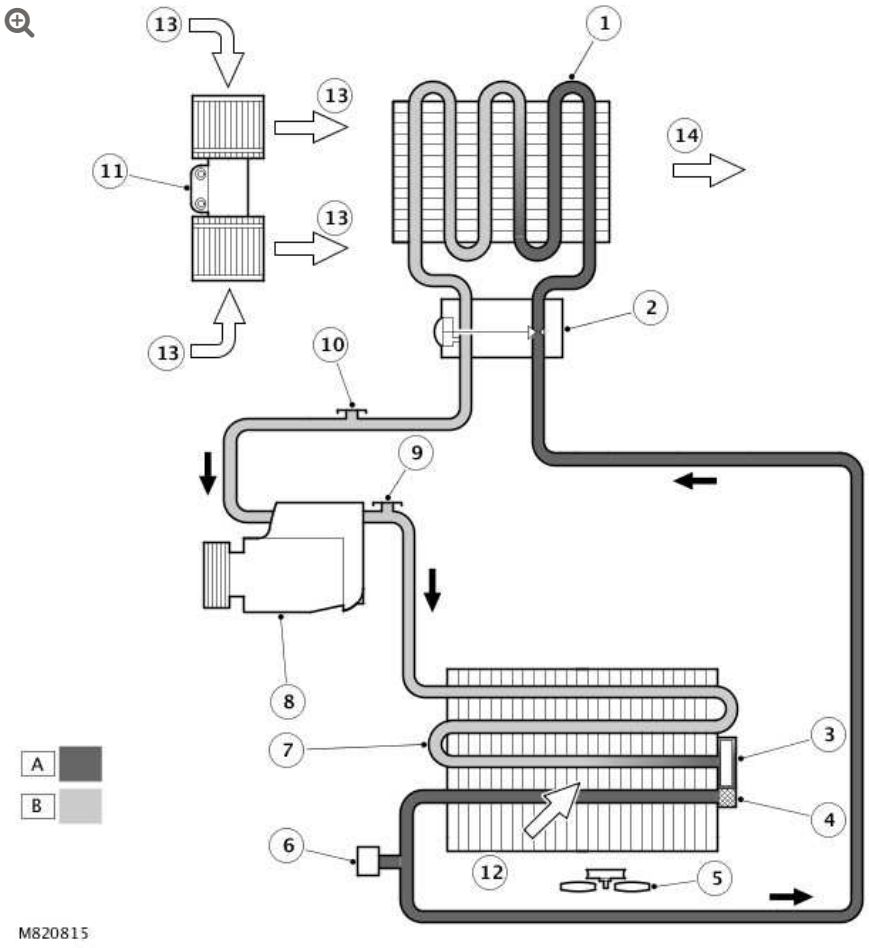

ITEM	DESCRIPTION
1	Evaporator
2	Thermostatic expansion valve
3	Desiccant (in receiver drier module)
4	Filter (in receiver drier module)
5	Electric cooling fan
6	Refrigerant pressure sensor
7	Condenser

ITEM	DESCRIPTION
8	A/C compressor
9	High pressure servicing connection
10	Low pressure servicing
11	Blower
12	Air flows: Ambient air flow through condenser
13	Fresh/Recirculated air flow through blower
14	Cooled air flow to vehicle interior

AIR CONDITIONING

CONDENSER CORE – V8 S/C 5.0L PETROL (G1225330)

REMOVAL AND INSTALLATION

REMOVAL

NOTE:

Removal steps in this procedure may contain installation details.

1. Disconnect the battery ground cable.
   Refer to: Specifications (414-00 Battery and Charging System - General Information, Specifications).

2. **WARNING:**

   Make sure to support the vehicle with axle stands.

   Raise and support the vehicle.

3. Refer to: Cooling System Partial Draining and Vacuum Filling (303-03B, General Procedures).

4. Refer to: Air Conditioning (A/C) System Recovery, Evacuation and Charging - V8 5.0L Petrol/V8 S/C 5.0L Petrol (412-00 Climate Control System - General Information, General Procedures).

5. Refer to: Hood Latch Panel (501-02 Front End Body Panels, Removal and Installation).

6. Refer to: Air Cleaner RH (303-12A Intake Air Distribution and Filtering - V8 5.0L Petrol, Removal and Installation).

7. Refer to: Air Cleaner Outlet Pipe RH (303-12A Intake Air Distribution and Filtering - V8 5.0L Petrol, Removal and Installation).

8. 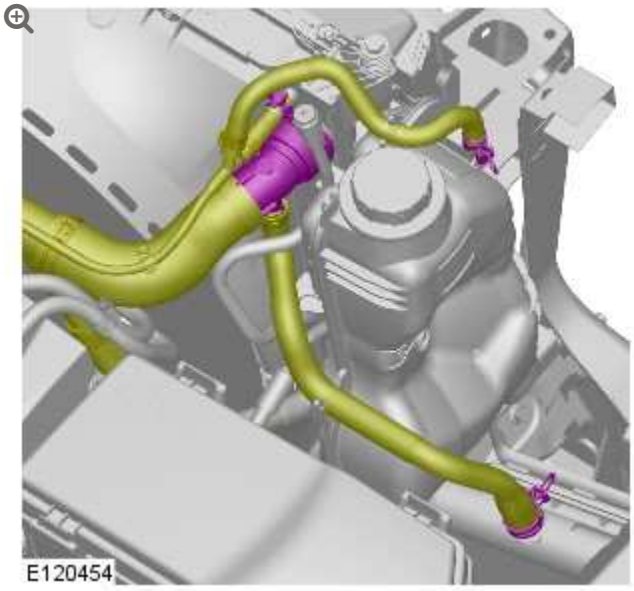

9.

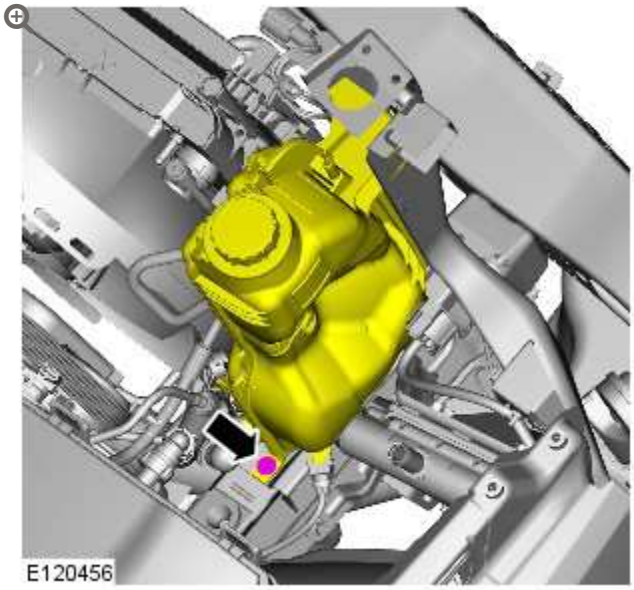

Torque: **9 Nm**

10.

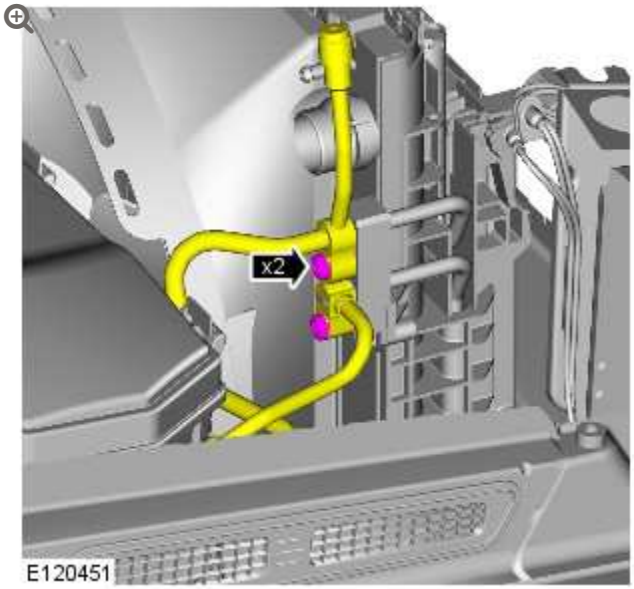

Torque: **8 Nm**

11.

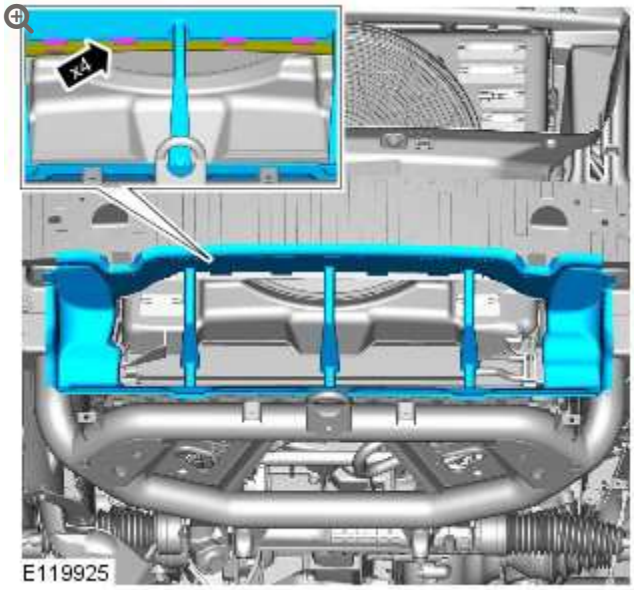

12.

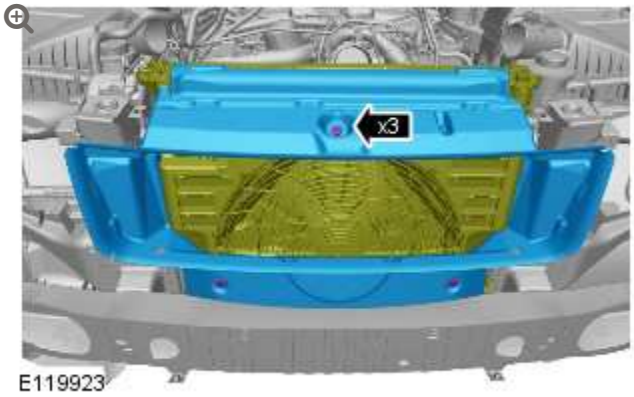

13.

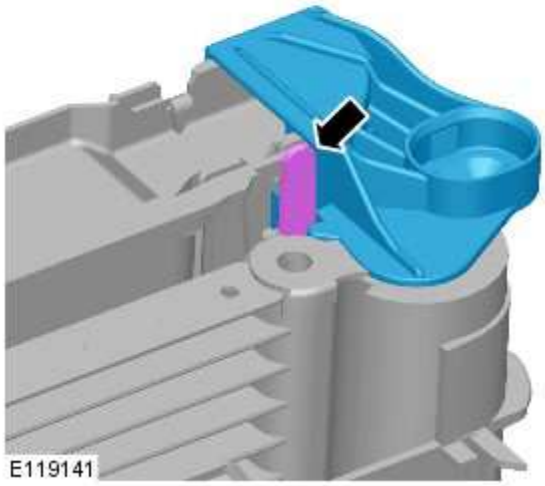

14.

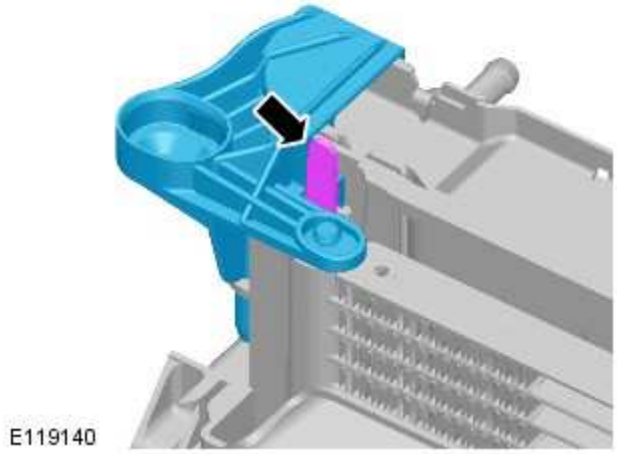

15.

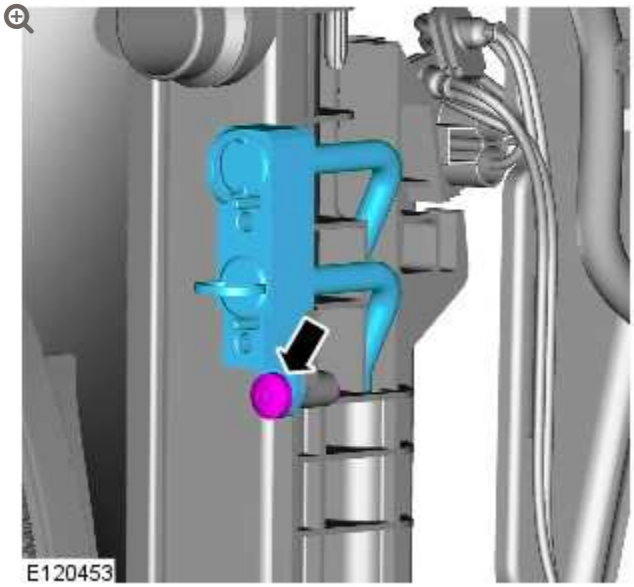

Torque: **8 Nm**

16.

CAUTION:

Always protect the cooling pack elements to prevent accidental damage.

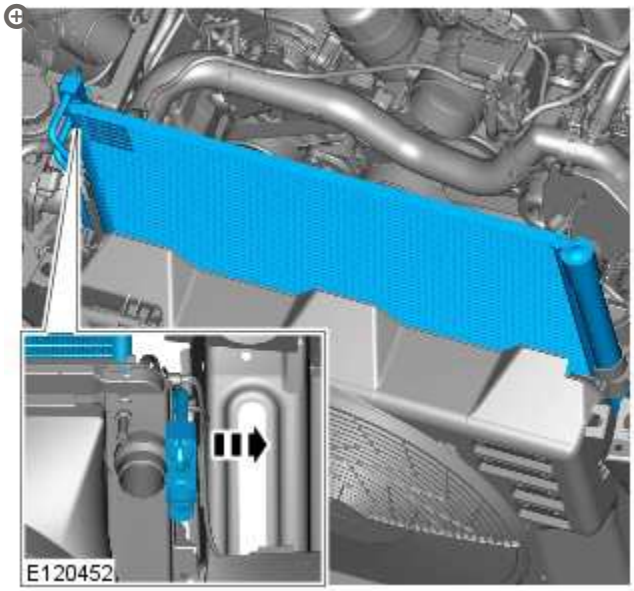

INSTALLATION

1. To install reverse the removal procedure.

AIR CONDITIONING

CONDENSER FAN – V8 5.0L PETROL/V8 S/C 5.0L PETROL (G1224145)

REMOVAL AND INSTALLATION

REMOVAL

NOTE:

Removal steps in this procedure may contain installation details.

1. Disconnect the battery ground cable.
   Refer to: Specifications (414-00, Specifications).

2. **WARNING:**

   Make sure to support the vehicle with axle stands.

   Raise and support the vehicle.

3. Refer to: Hood Latch Panel (501-02, Removal and Installation).

4.

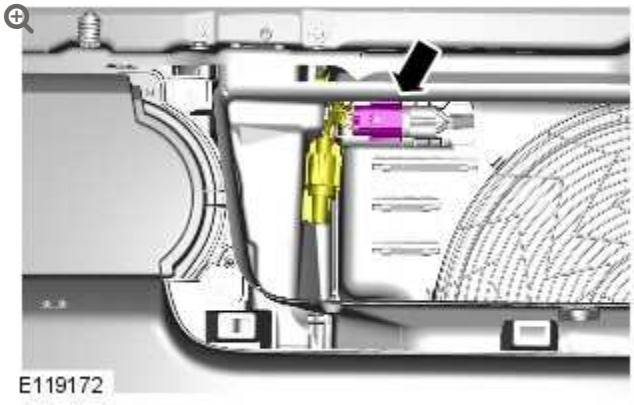

5.

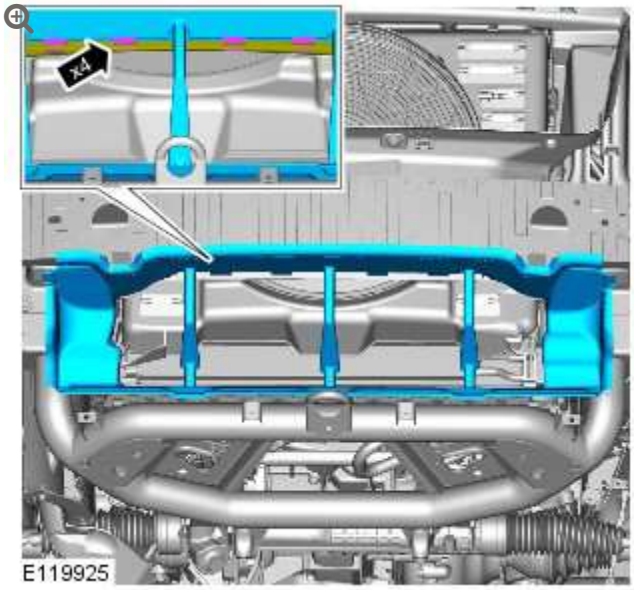

6.

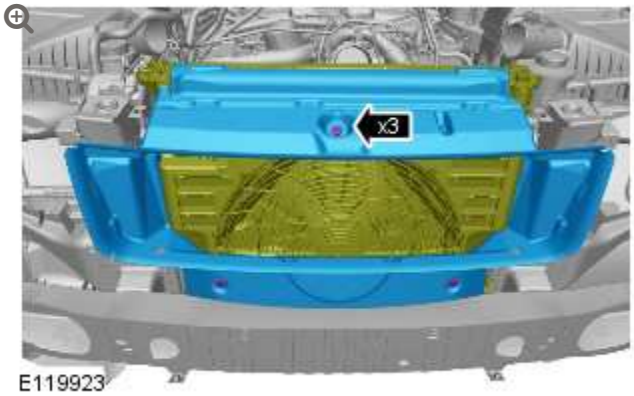

7.

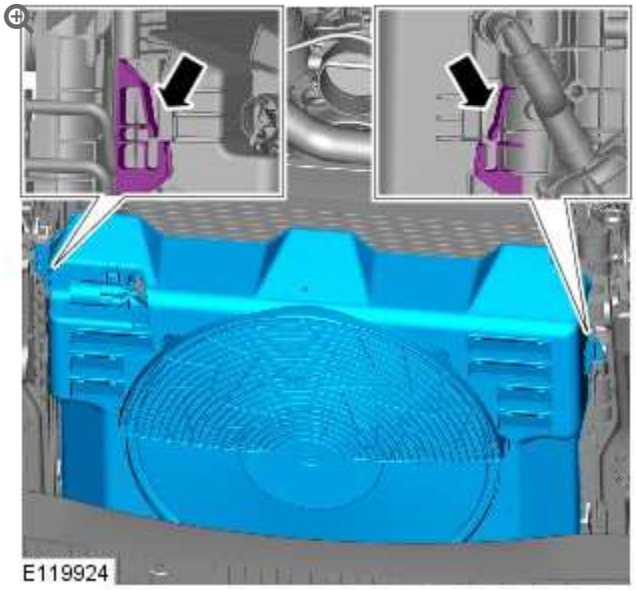

INSTALLATION

1. To install reverse the removal procedure.

AIR CONDITIONING

EVAPORATOR CORE – V8 S/C 5.0L PETROL (G1345056)

REMOVAL AND INSTALLATION

REMOVAL

WARNINGS:

- Persons working on the supplemental restraint system (SRS) must be fully trained and have been issued with the safety guidelines.
- Allow a period of 10 minutes to elapse after disconnecting the battery before undertaking any work on the SRS.
- The SRS electrical connectors are unique. DO NOT force, or attempt to connect electrical connectors to the wrong sockets.
- The correct procedures must always be used when working on SRS components.
- It is imperative that before any work is undertaken on the SRS system, the appropriate information is read thoroughly.
- Always disconnect both battery cables before beginning work on the SRS system. Disconnect the ground cable first. Never reverse connect the battery.
- Take extra care when handling SRS components.

1. Set the footwell duct air outlet to closed.

2. Make the air bag supplemental restraint system (SRS) safe.
   Refer to: Standard Workshop Practices (100-00, Description and Operation).

3. Disconnect the battery ground cable.
   Refer to: Specifications (414-00, Specifications).

4. Remove the heater and evaporator core housing.
   Refer to: Heater Core and Evaporator Core Housing - 5.0L SC V8 - AJ133 (412-02, Removal and Installation).

5. Reposition the heater and evaporator core housing for access.

6. 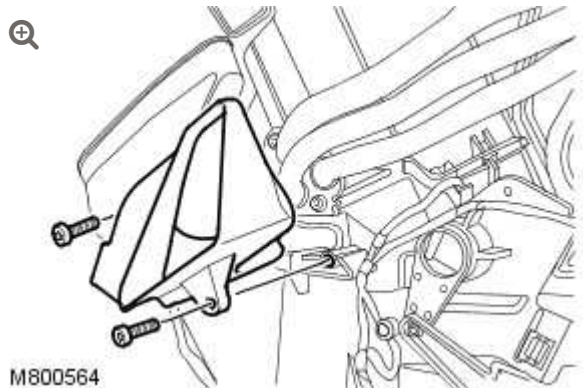

Remove the left-hand footwell duct.

7. 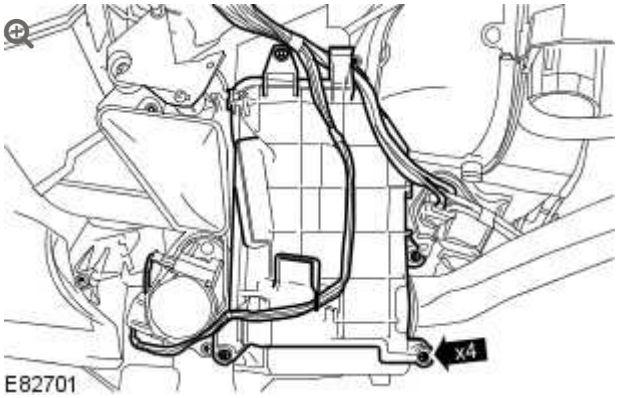

Remove the thermostatic expansion valve cover.

8. 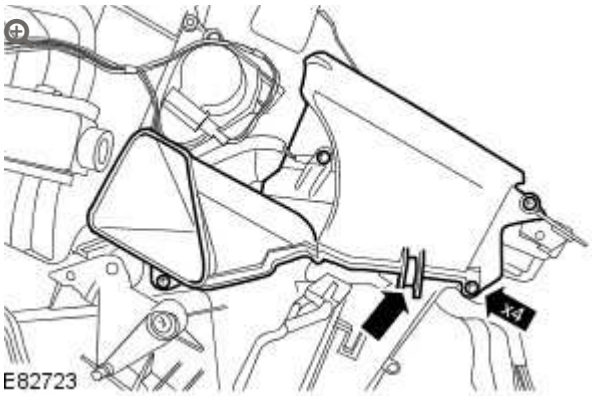

Remove the right-hand footwell duct.

9. Disconnect the footwell duct actuator electrical connector.

10. Release the evaporator temperature sensor from the heater and evaporator core housing.

11. 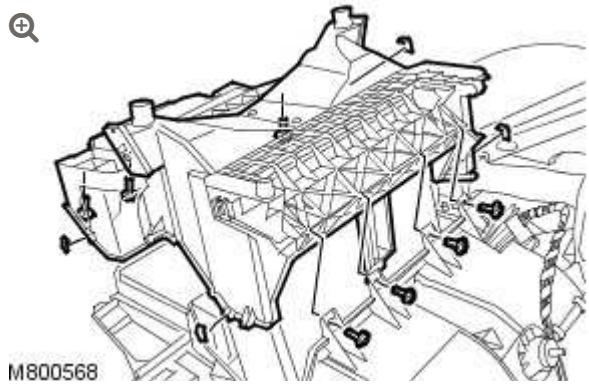

Remove the heater and evaporator core housing lower cover.

12. **CAUTION:**

Make sure that all openings are sealed. Use new blanking caps.

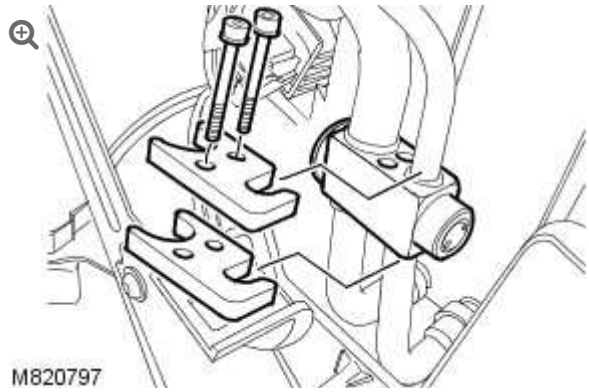

Remove the thermostatic expansion valve.

13. Remove the evaporator core.

INSTALLATION

1. Install the evaporator core.
2. **NOTE:**

   Remove and discard the blanking caps.

   Install the thermostatic expansion valve.
3. Install the heater and evaporator core housing lower cover.
4. Install the evaporator temperature sensor to the heater and evaporator core housing.
5. Connect the footwell duct actuator electrical connector.
6. Install the right-hand footwell duct.
7. Install the thermostatic expansion valve cover.
8. Install the left-hand footwell duct.
9. Reposition the heater and evaporator core housing for access.
10. Install the heater and evaporator core housing.
    Refer to: Heater Core and Evaporator Core Housing - 5.0L SC V8 - AJ133 (412-02, Removal and Installation).
11. Connect the battery ground cable.
    Refer to: Specifications (414-00, Specifications).

2012.0 RANGE ROVER (LM), 412-03

AIR CONDITIONING

DIAGNOSIS AND TESTING

For additional information.

REFER to: Climate Control System (412-00 Climate Control System - General Information, Diagnosis and Testing).

AIR CONDITIONING

RECEIVER DRIER – V8 S/C 5.0L PETROL (G1345058)

REMOVAL AND INSTALLATION

82.17.03	SUCTION ACCUMULATOR – RENEW	5000 CC, AJ V8, SUPERCHARGED	3.5	USED WITHINS	+

REMOVAL

NOTE:

Removal steps in this procedure may contain installation details.

1. Disconnect the battery ground cable.
   Refer to: Specifications (414-00, Specifications).
2. Refer to: Condenser Core - 5.0L SC V8 - AJ133 (412-03, Removal and Installation).
3.

NOTE:

Make sure that all openings are sealed. Use new blanking caps.

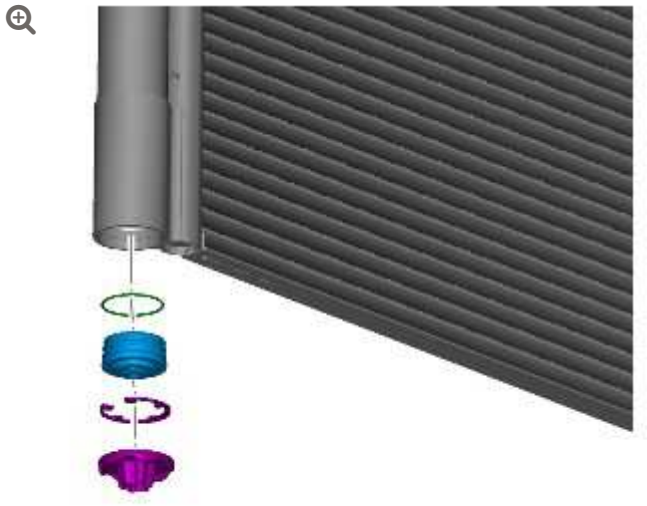

E130879

4.

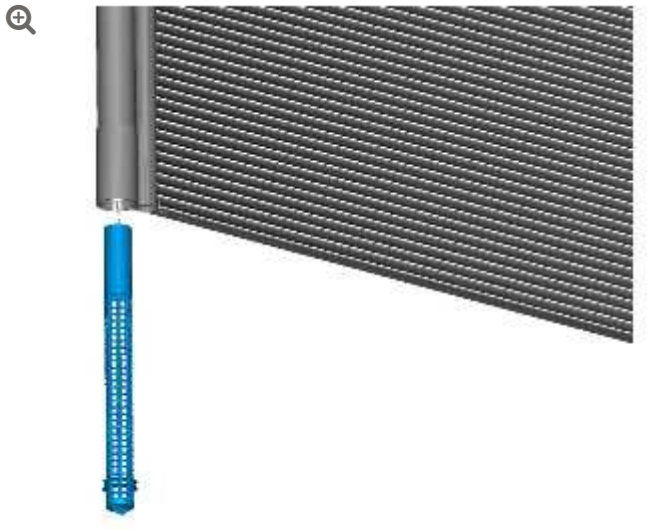

E130880

INSTALLATION

1. To install, reverse the removal procedure.

AIR CONDITIONING

THERMOSTATIC EXPANSION VALVE – V8 5.0L PETROL/V8 S/C 5.0L PETROL (G910473)

REMOVAL AND INSTALLATION

80.15.05	VENTILATOR – FACE LEVEL – LH – RENEW	ALL DERIVATIVES	0.1	USED WITHINS	+
82.25.01	VALVE – THERMOSTATIC EXPANSION – RENEW	LEFT HAND DRIVE	1.2	USED WITHINS	+

REMOVAL

All vehicles

1. Disconnect the battery ground cable.
   For additional information, refer to: Specifications (414-00, Specifications).

2.

Remove the plenum chamber.
For additional information, refer to: Plenum Chamber (412-01, Removal and Installation).

3. Recover the air conditioning (A/C) refrigerant.
For additional information, refer to: Air Conditioning (A/C) System Recovery, Evacuation and Charging (412-00, General Procedures).

	All vehicles

4. **CAUTION:**

Make sure that all openings are sealed. Use new blanking caps.

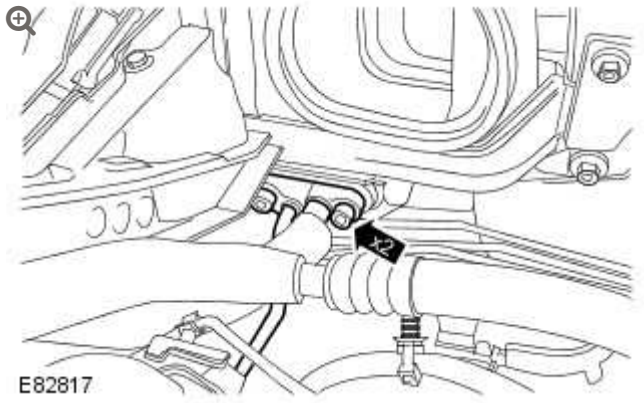

Disconnect the A/C pipes.

- Remove the 2 bolts.
- Remove and discard the 2 O-ring seals.

5.

NOTE:

LH illustration shown, RH is similar.

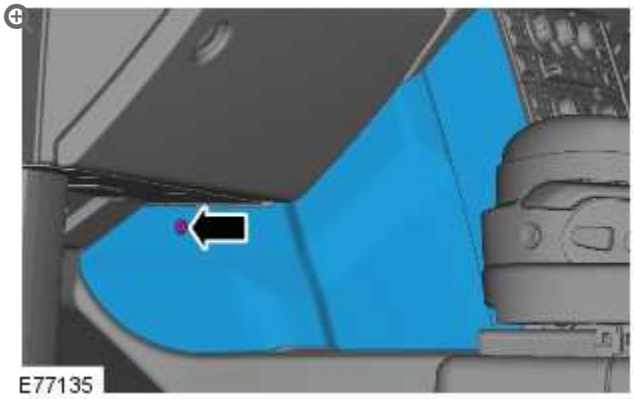

Remove the floor console extension trim panel.

- Remove the screw.
- Release the 2 clips.

	Right-hand drive vehicles

6.

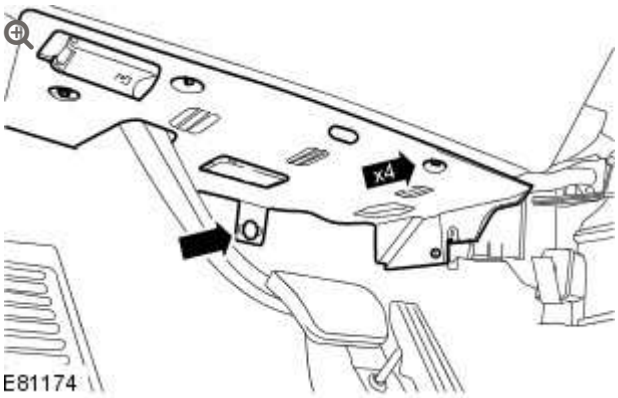

Release the driver side closing trim panel.

- Remove the 4 screws.
- Remove the clip.

7.

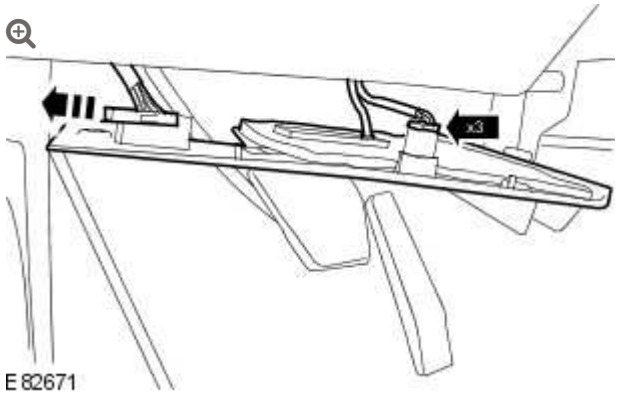

Remove the driver side closing trim panel.

- Disconnect the 2 electrical connectors.
- Release the vehicle diagnostic socket.

8. Remove the right-hand front footwell duct .
   - Remove the 2 screws.

	Left-hand drive vehicles

9.

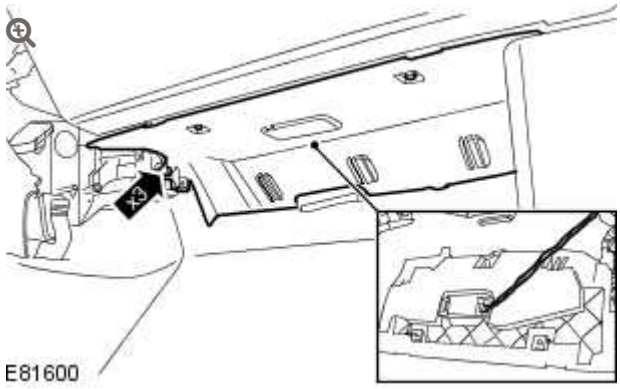

Remove the passenger side closing trim panel.

- Remove the 3 screws.
- Remove the electrical connector.

10.

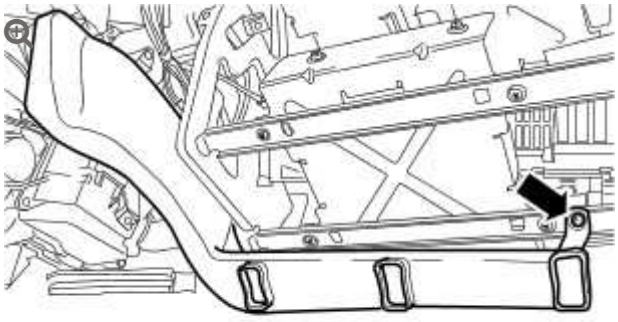

E82189

Remove the passenger side footwell duct.

- Remove the screw.

	All vehicles

11.

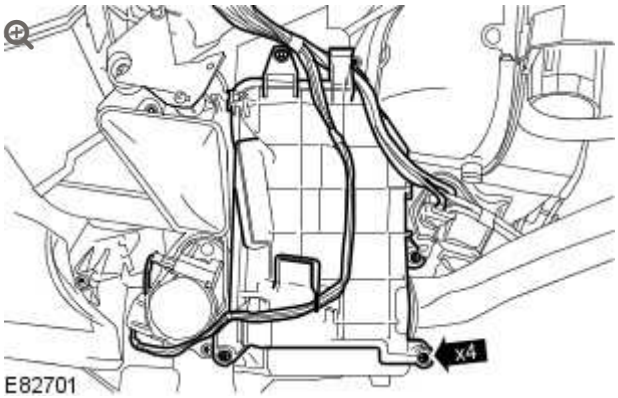

E82701

Remove the thermostatic expansion valve cover.

- Release the wiring harness from the 2 tangs.
- Remove the 4 screws.

12.

CAUTION:

Make sure that all openings are sealed. Use new blanking caps.

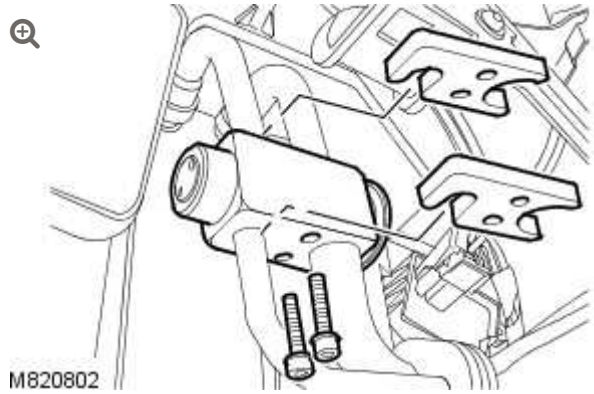

Remove the thermostatic expansion valve.

- Remove the 2 bolts.
- Remove the 2 A/C pipe clamps.
- Remove the A/C pipes.
- Remove and discard the O-rings.

INSTALLATION

ℹ	All vehicles

1. Install the thermostatic expansion valve.
   - Remove the blanking caps from the ports.
   - Clean the component mating faces.
   - Lubricate and install the new O-rings.
   - Install the A/C pipes.
   - Install the 2 A/C pipe clamps.
   - Tighten the bolts to 6 Nm (4 lb.ft).
2. Install the thermostatic expansion valve cover.
   - Install the 4 screws.
   - Secure the wiring harness to the tangs.

	Right-hand drive vehicles

3. Install the right-hand front footwell duct.
   - Install the screws.

4. Install the driver side closing trim panel.
   - Connect the electrical connectors.
   - Attach the vehicle diagnostic socket.

5. Secure the driver side closing trim panel.
   - Install the screws.
   - Install the clip.

	Left-hand drive vehicles

6. Install the passenger side closing trim panel.
   - Connect the electrical connector.
   - Install the screws.

7. Install the passenger side footwell duct.
   - Install the screw.

8. **NOTE:**

   LH illustration shown, RH is similar.

   Install the floor console extension trim panel.
   - Secure the clips.
   - Install the screw.

9. Connect the A/C pipes.
   - Remove the blanking caps from the ports.
   - Clean the component mating faces.
   - Lubricate and install the new O-rings.
   - Install the A/C pipes.
   - Tighten the bolts to 6 Nm (4 lb.ft).

10. Recharge the A/C system.
    For additional information, refer to: Air Conditioning (A/C) System Recovery, Evacuation and Charging (412-00, General Procedures).

11. Install the plenum chamber.
    For additional information, refer to: Plenum Chamber (412-01, Removal and Installation).

12. Disconnect the battery ground cable.
    For additional information, refer to: Specifications (414-00, Specifications).

AUXILIARY CLIMATE CONTROL

SPECIFICATIONS

DESCRIPTION	NM	LB-FT
Auxiliary climate control assembly bolts	4	3
Auxiliary climate control sealing plate bolts	4	3
Air conditioning (A/C) pipe bolts	9	7

AUXILIARY CLIMATE CONTROL

HEATER CORE – V8 5.0L PETROL/V8 S/C 5.0L PETROL (G1345227)

REMOVAL AND INSTALLATION

82.25.20	EVAPORATOR – RENEW	5000 CC, AJ V8, SUPERCHARGED	6.5	USED WITHINS	+
82.25.20	EVAPORATOR – RENEW	ALL DERIVATIVES	7.4	USED WITHINS	+

REMOVAL

NOTE:

Removal steps in this procedure may contain installation details.

1. Disconnect the battery ground cable.
   Refer to: Specifications (414-00 Charging System - General Information, Specifications).

2.

Refer to: Auxiliary Heater Core and Evaporator Core Housing - 5.0L NA V8 - AJ133/5.0L SC V8 - AJ133 (412-03, Removal and Installation).

3. **CAUTION:**

> Take extra care not to damage the component.

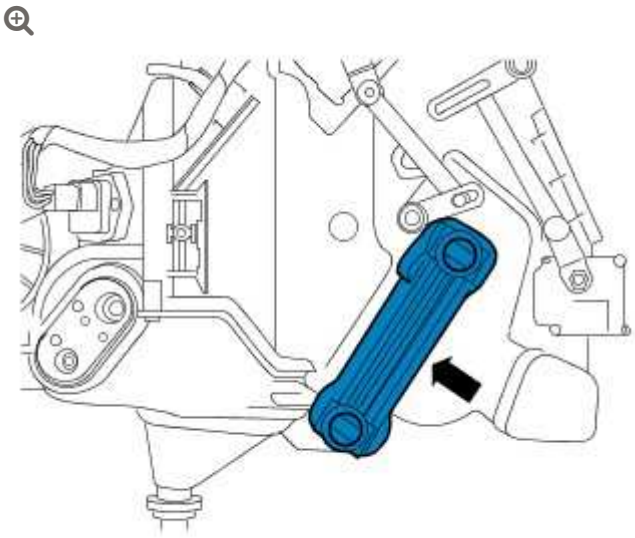

E131195

INSTALLATION

1. To install, reverse the removal procedure.

AUXILIARY CLIMATE CONTROL

REGISTER (G860270)

REMOVAL AND INSTALLATION

REMOVAL

1. Remove the floor console stowage compartment lid.
   For additional information, refer to: Floor Console Stowage Compartment Lid (501-12, Removal and Installation).

2. 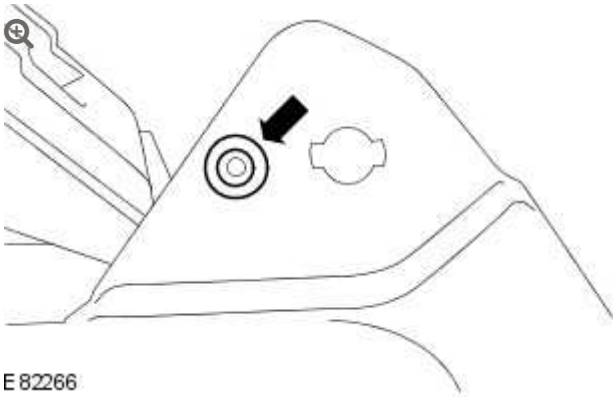
   E82266

   Remove the floor console stowage compartment lid damper sleeve.

3. **NOTE:**

   Floor console shown removed for clarity.

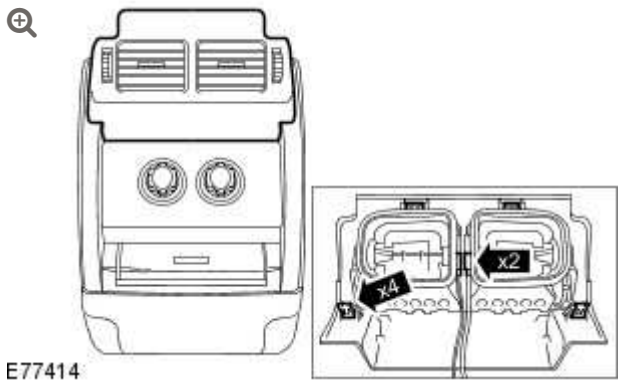

Remove the register.

- Carefully release the 4 clips.
- Disconnect the 2 electrical connectors.

INSTALLATION

1. Install the register.
   - Connect the 2 electrical connectors.
   - Secure the 4 clips.
2. Install the floor console stowage compartment lid damper sleeve.
3. Install the floor console stowage compartment lid.
   For additional information, refer to: Floor Console Stowage Compartment Lid (501-12, Removal and Installation).

AUXILIARY CLIMATE CONTROL

AUXILIARY BLOWER MOTOR (G1345219)

REMOVAL AND INSTALLATION

82.26.33	BLOWER MOTOR - ASSEMBLY - RENEW	ALL DERIVATIVES	0.7	USED WITHINS	+

REMOVAL

NOTE:

Removal steps in this procedure may contain installation details.

1. Disconnect the battery ground cable.
   Refer to: Specifications (414-00, Specifications).
2. Refer to: Floor Console (501-12, Removal and Installation).
3.

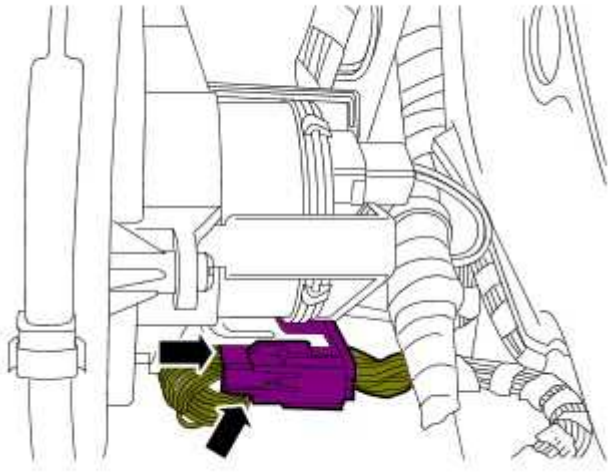

E131174

4.

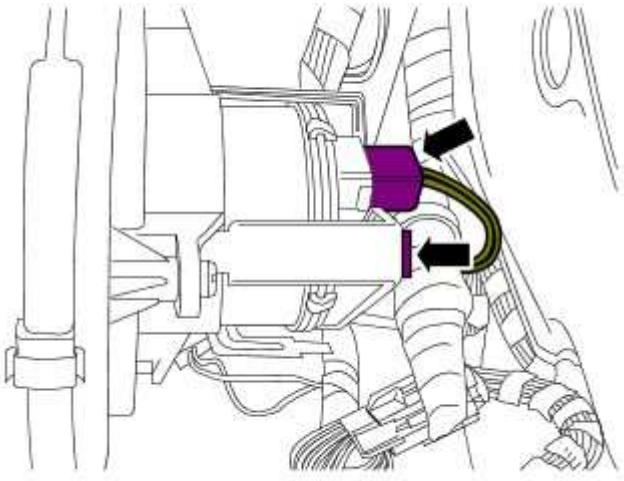

E131175

5.

NOTE:

Note the fitted position.

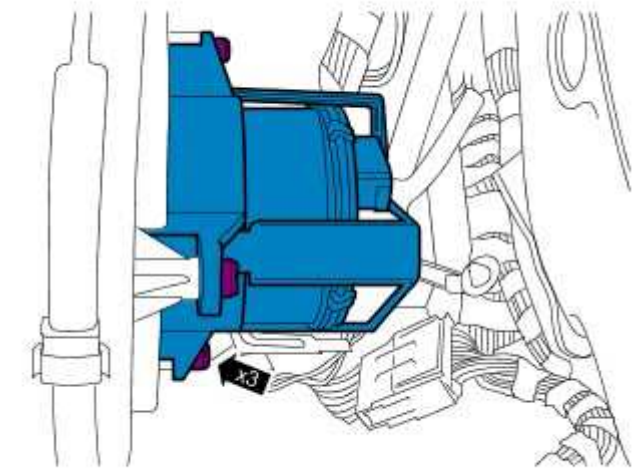

E131178

INSTALLATION

1. To install, reverse the removal procedure.

AUXILIARY BLOWER MOTOR RESISTOR (G1345220)

REMOVAL AND INSTALLATION

REMOVAL

NOTE:

Removal steps in this procedure may contain installation details.

1. Disconnect the battery ground cable.
   Refer to: Specifications (414-00, Specifications).
2. Refer to: Floor Console (501-12, Removal and Installation).
3.

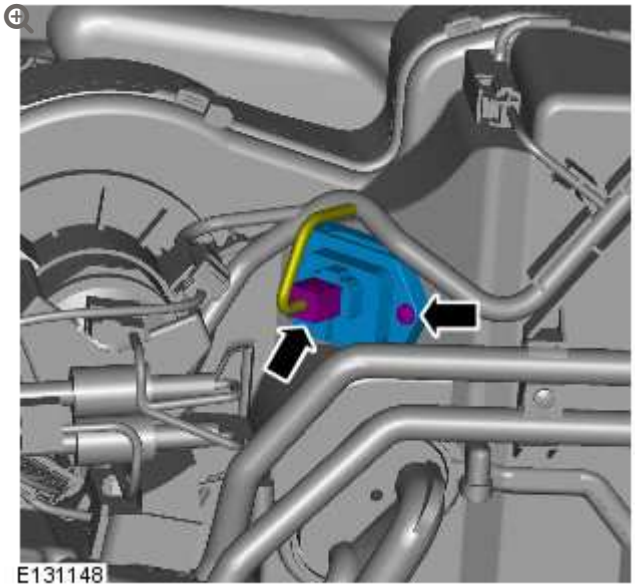

INSTALLATION

1. To install, reverse the removal procedure.

AUXILIARY CLIMATE CONTROL ASSEMBLY (G1345213)

REMOVAL AND INSTALLATION

REMOVAL

NOTE:

Removal steps in this procedure may contain installation details.

1. Refer to: Rear Passenger Entertainment Control Panel (415-07, Removal and Installation).
2.

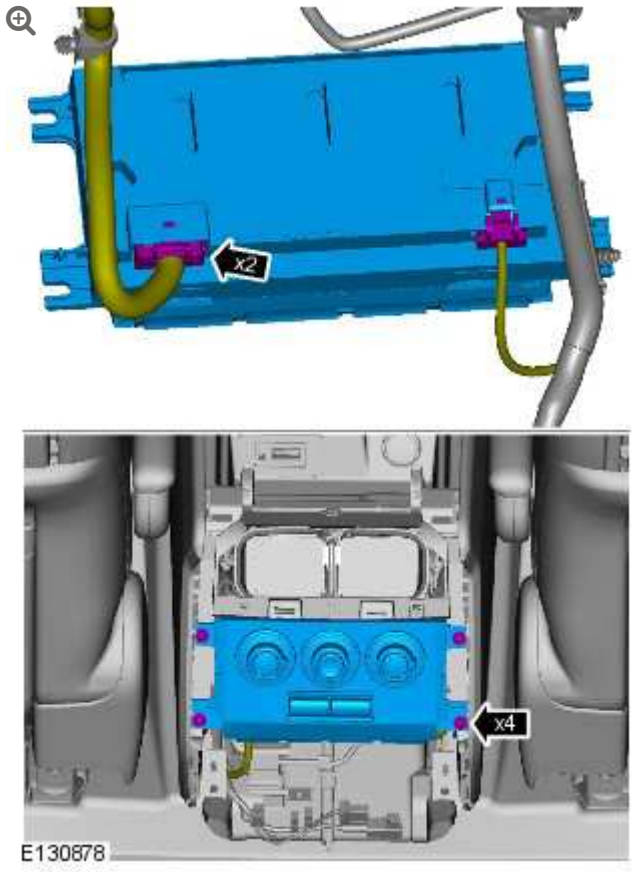

INSTALLATION

1. To install, reverse the removal procedure.

2012.0 RANGE ROVER (LM), 412-03

AUXILIARY CLIMATE CONTROL

DIAGNOSIS AND TESTING

For additional information.

REFER to: Climate Control System (412-00, Diagnosis and Testing).

AUXILIARY FOOTWELL VENT/DUCT BLEND DOOR ACTUATOR (G1345532)

REMOVAL AND INSTALLATION

REMOVAL

NOTE:

Removal steps in this procedure may contain installation details.

1. Disconnect the battery ground cable.
   Refer to: Specifications (414-00, Specifications).

2. Refer to: Rear Passenger Entertainment Control Panel (415-07, Removal and Installation).

3. **CAUTION:**

   Make sure damage does not occur to the auxiliary temperature blend door actuator link rod.

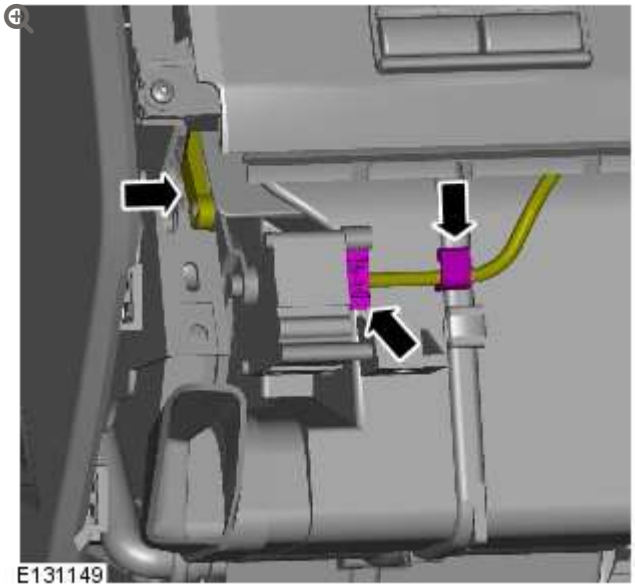

4.

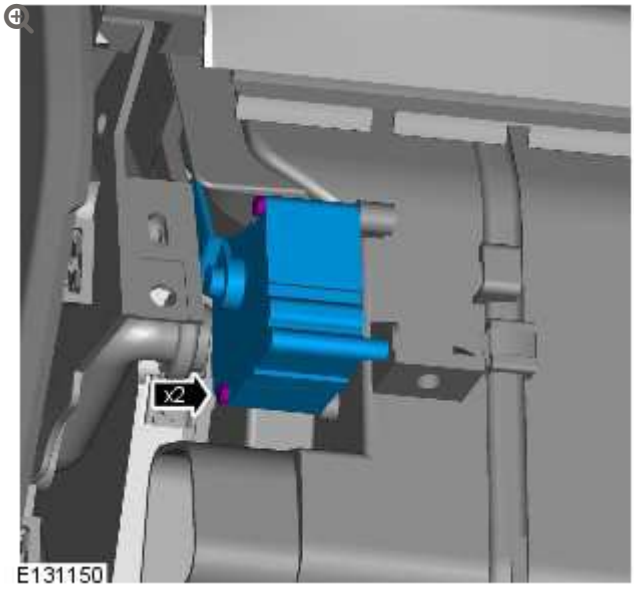

INSTALLATION

1. To install, reverse the removal procedure.

AUXILIARY HEATER CORE AND EVAPORATOR CORE HOUSING – V8 5.0L PETROL/V8 S/C 5.0L PETROL (G1345480)

REMOVAL AND INSTALLATION

REMOVAL

WARNING:

Since injury such as scalding could be caused by escaping steam or coolant, do not remove the filler cap from the coolant expansion tank while the system is hot.

CAUTION:

Make sure that all openings are sealed. Use new blanking caps.

1.

Disconnect the battery ground cable.
For additional information, refer to: Specifications (414-00, Specifications).

2. Evacuate the air conditioning (A/C) system.
For additional information, refer to: Air Conditioning (A/C) System Recovery, Evacuation and Charging - 5.0L NA V8 - AJ133/5.0L SC V8 - AJ133 (412-00, General Procedures).

3. **WARNING:**

> Make sure to support the vehicle with axle stands.

Raise and support the vehicle.

4. 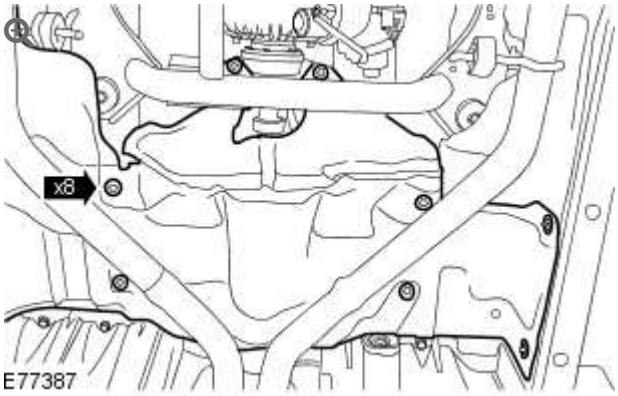

Reposition the exhaust center heat shield.

- Remove the 8 nuts.

5.

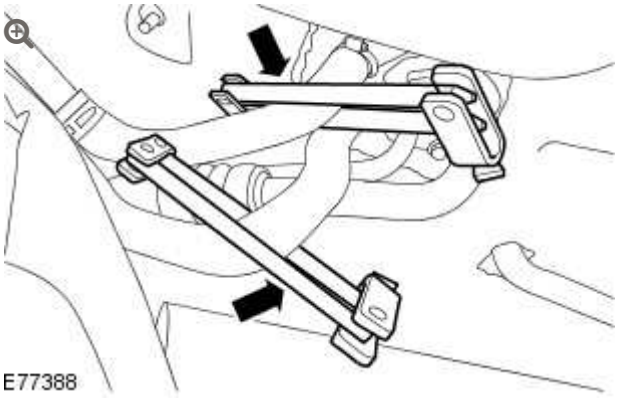

Clamp the auxiliary heater core coolant hoses.

- Clamp the hoses to minimize coolant loss.

6.

WARNING:

Since injury such as scalding could be caused by escaping steam or coolant, allow the vehicle cooling system to cool prior to carrying out this procedure.

CAUTION:

Engine coolant will damage the paint finished surfaces. If spilt, immediately remove the coolant and clean the area with water.

NOTE:

Some fluid spillage is inevitable during this operation.

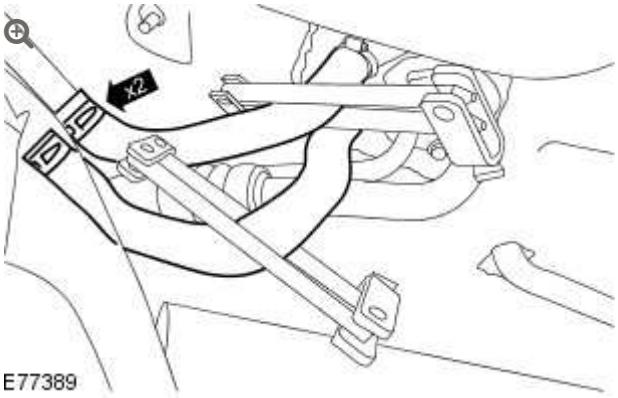

Disconnect the auxiliary heater core coolant hoses.

- Carefully release the 2 clips.
- Position a container to collect the fluid.

7. Remove the floor console.
   For additional information, refer to: Floor Console (501-12, Removal and Installation).

8. 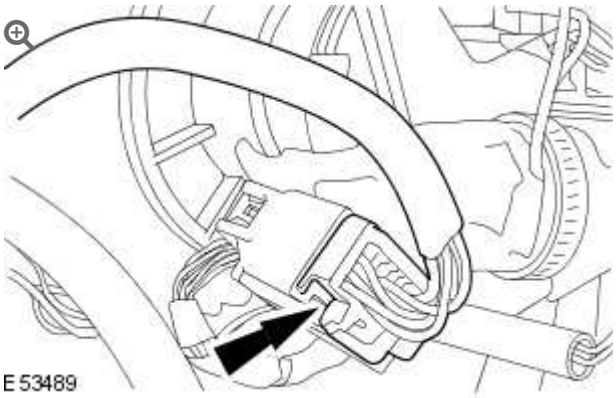

   Disconnect the auxiliary heater core and evaporator core housing electrical connector.

9.

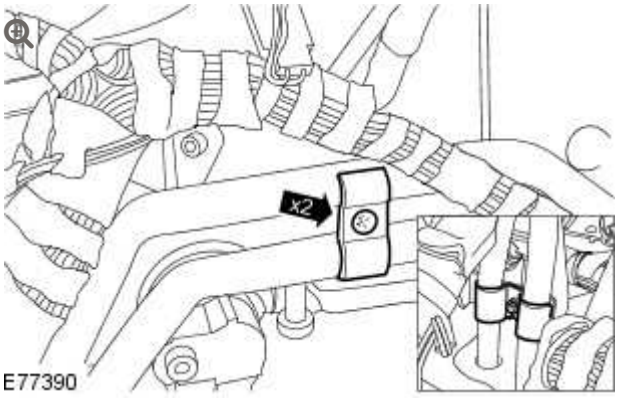

Remove the auxiliary heater core inlet and outlet pipe brackets.

- Remove the 2 screws.

10.

WARNING:

Since injury such as scalding could be caused by escaping steam or coolant, allow the vehicle cooling system to cool prior to carrying out this procedure.

NOTE:

Some fluid spillage is inevitable during this operation.

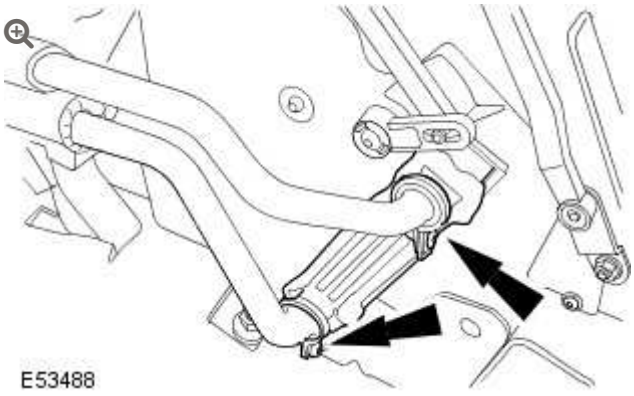

Undo and remove the heater core inlet and outlet pipe clamps.

- Position a container to collect the fluid.
- Position an absorbent cloth to collect fluid spillage.
- Disconnect the heater core inlet and outlet pipes.
- Remove and discard the two O-ring seals.
- Install blanking caps to the exposed ports.

11.

CAUTION:

Before disconnecting or removing the components, make sure the area around the joint faces and connections are clean. Plug open connections to prevent contamination.

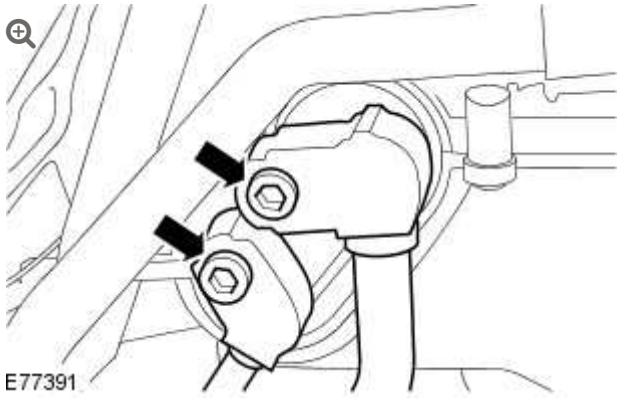

Disconnect the A/C pipes.

- Remove the 2 bolts.
- Discard the O-ring seals.

12.

NOTE:

Left-hand shown, right-hand similar.

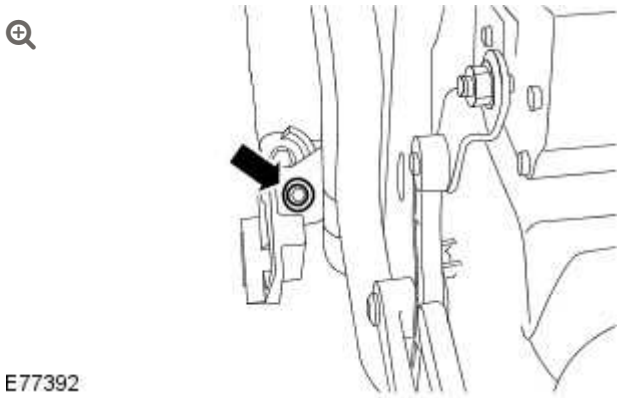

Remove the auxiliary heater core and evaporator core housing rear bolts.

- Remove the 2 bolts.

13.

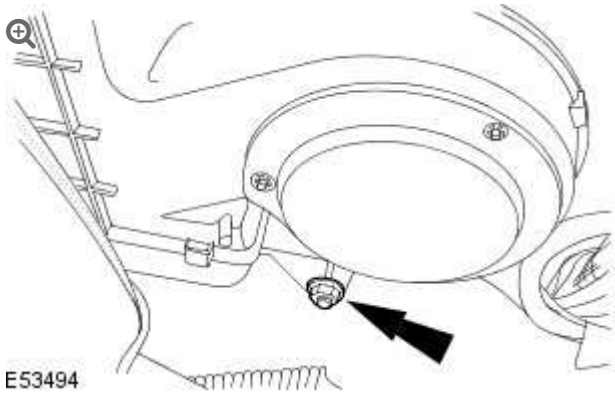

Remove the auxiliary heater core and evaporator core housing front RH bolt.

14. 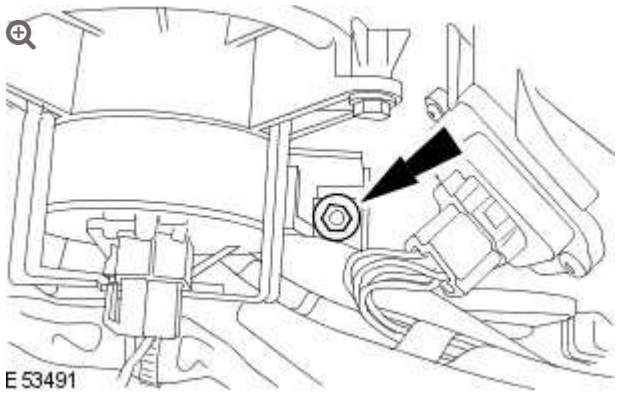

Remove the auxiliary heater core and evaporator core housing.

- Remove the auxiliary heater core and evaporator core housing front bolt.

INSTALLATION

1. Install the auxiliary heater core and evaporator core housing.
   - Install the 4 auxiliary heater core and evaporator core housing bolts.
   - Tighten to 4 Nm (3 lb.ft).
2. Connect the A/C pipes.

- Remove the blanking caps from the ports.
- Lubricate and install the new O-rings.
- Install the 2 bolts and tighten to 2 Nm (1.5 lb.ft).

3. Install the auxiliary heater core inlet and outlet pipe clamps.
   - Remove the blanking caps from the ports.
   - Lubricate and install the new O-ring seals.
   - Connect the heater core inlet and outlet pipes.
   - Remove the container.
   - Remove the absorbent cloth.

4. Install the auxiliary heater core inlet and outlet pipe brackets.
   - Install the 2 screws.

5. Connect the auxiliary heater core and evaporator core housing electrical connector.

6. Install the floor console.
   For additional information, refer to: Floor Console (501-12, Removal and Installation).

7. Connect the auxiliary heater core coolant hoses.
   - Install the 2 clips.
   - Remove the container.

8. Remove the coolant hose clamps.

9. Install the exhaust center heat shield.
   - Reposition the exhaust center heat shield.
   - Install the 8 nuts.

10. Recharge the A/C system.
    For additional information, refer to: Air Conditioning (A/C) System Recovery, Evacuation and Charging - 5.0L NA V8 - AJ133/5.0L SC V8 - AJ133 (412-00, General Procedures).

11. Connect the battery ground cable.
    For additional information, refer to: Specifications (414-00, Specifications).

12. Check and top-up the coolant.

13. Start and run the engine.
    - Hold the engine speed at 2,500 RPM for 30 seconds.
    - Return the engine to idle for 30 seconds.
    - Repeat the above procedure a further 4 times.

14. Switch on the auxiliary heater.
    - Set the heater controls to HOT.
    - Make sure the auxiliary heater is emitting hot air.

15. Switch the engine off and allow to cool.

16. Check and top-up the coolant.

AUXILIARY TEMPERATURE BLEND DOOR ACTUATOR

(G1345231)

REMOVAL AND INSTALLATION

REMOVAL

NOTE:

Removal steps in this procedure may contain installation details.

1. Disconnect the battery ground cable.
   Refer to: Specifications (414-00, Specifications).
2. Refer to: Floor Console Stowage Compartment (501-12, Removal and Installation).
3. **CAUTION:**

   Make sure damage does not occur to the auxiliary temperature blend door actuator link rod.

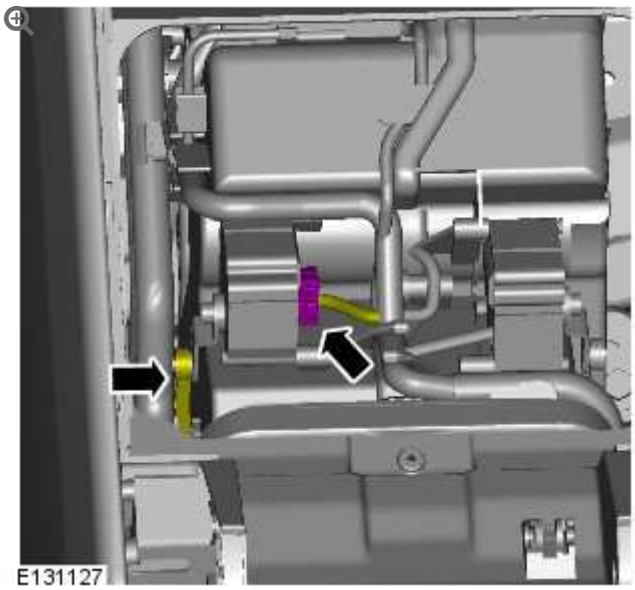

4.

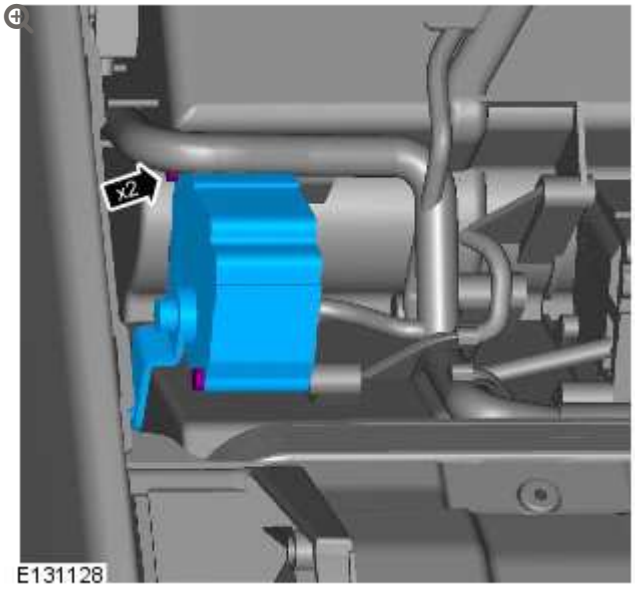

INSTALLATION

1. To install, reverse the removal procedure.

AUXILIARY CLIMATE CONTROL

EVAPORATOR CORE – V8 5.0L PETROL/V8 S/C 5.0L PETROL (G1345223)

REMOVAL AND INSTALLATION

REMOVAL

NOTE:

Removal steps in this procedure may contain installation details.

1. Disconnect the battery ground cable.
   Refer to: Specifications (414-00, Specifications).

2. Refer to: Auxiliary Heater Core and Evaporator Core Housing - 5.0L NA V8 - AJ133/5.0L SC V8 - AJ133 (412-03, Removal and Installation).

3.

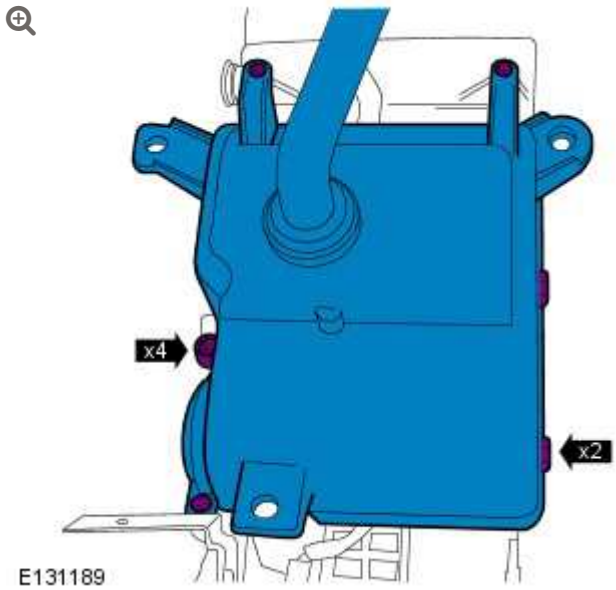

4.

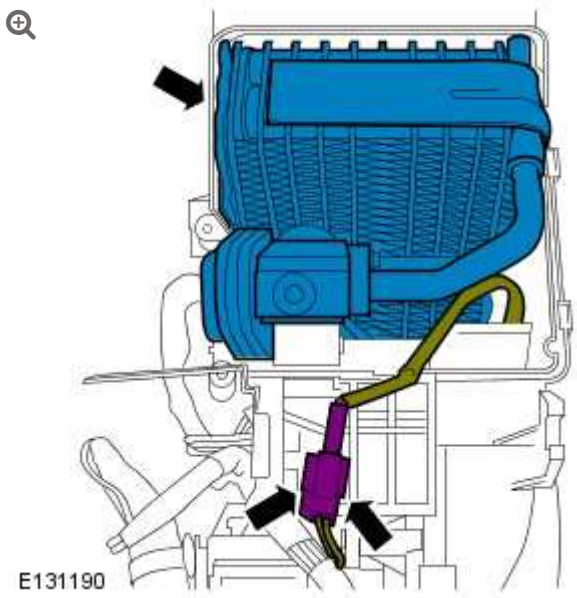

INSTALLATION

1. To install, reverse the removal procedure.

CONTROL COMPONENTS

AMBIENT AIR TEMPERATURE SENSOR

(G1240557)

REMOVAL AND INSTALLATION

80.40.31	SENSOR - OUTSIDE TEMPERATURE - RENEW	ALL DERIVATIVES	0.1	USED WITHINS	+
80.40.31	SENSOR - OUTSIDE TEMPERATURE - RENEW	ALL DERIVATIVES	0.7	USED WITHINS	+

REMOVAL

1. Disconnect the battery ground cable.
   For additional information, refer to: Specifications (414-00, Specifications).

2. Remove the front door trim panel.
   For additional information, refer to: Front Door Trim Panel (501-05, Removal and Installation).

3.

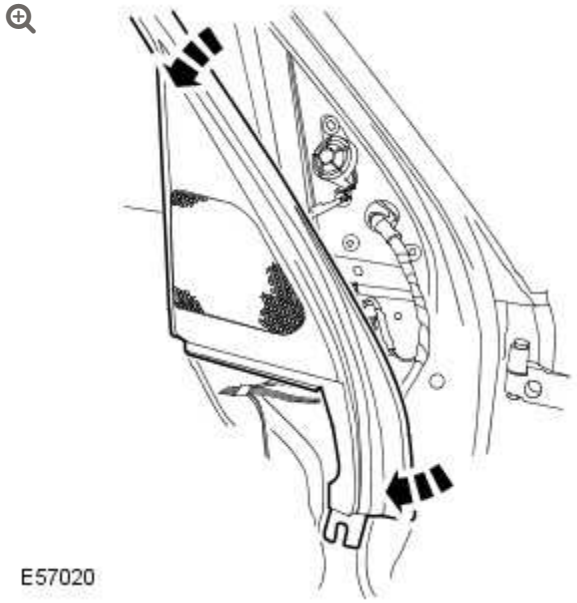

Release the window surround trim panel.

4.

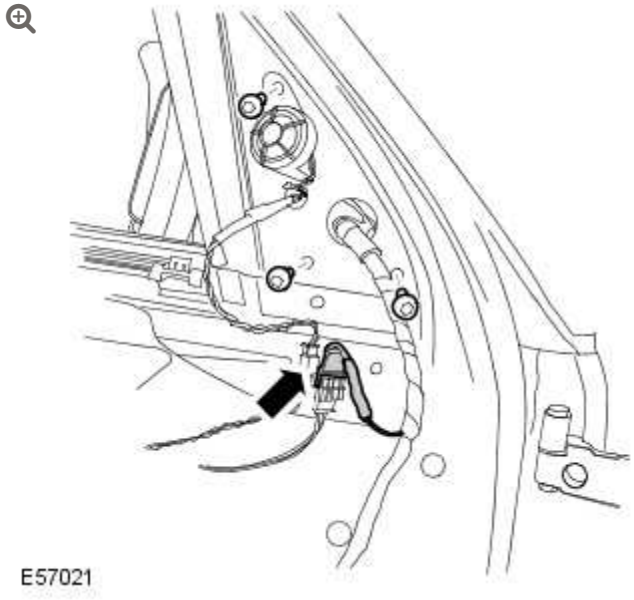

Remove the exterior mirror.

- Remove the 3 Torx screws.
- Disconnect the electrical connector.

INSTALLATION

1.

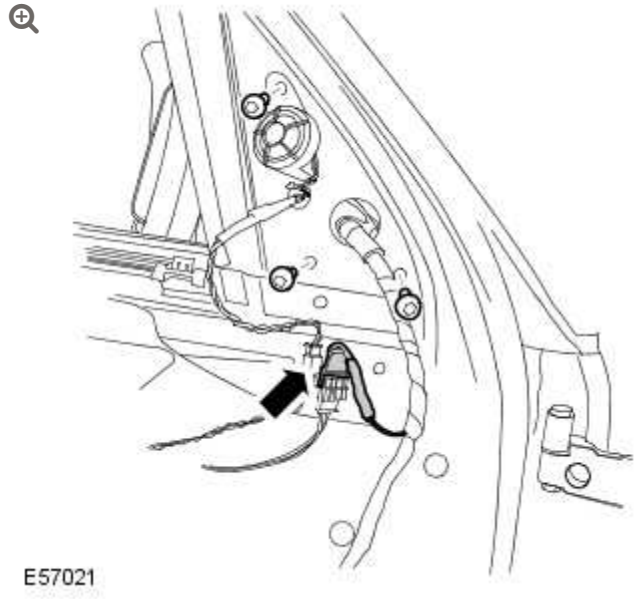

Install the exterior mirror.

- Tighten the Torx screws to 8 Nm (6 lb.ft).
- Connect the electrical connector.

2.

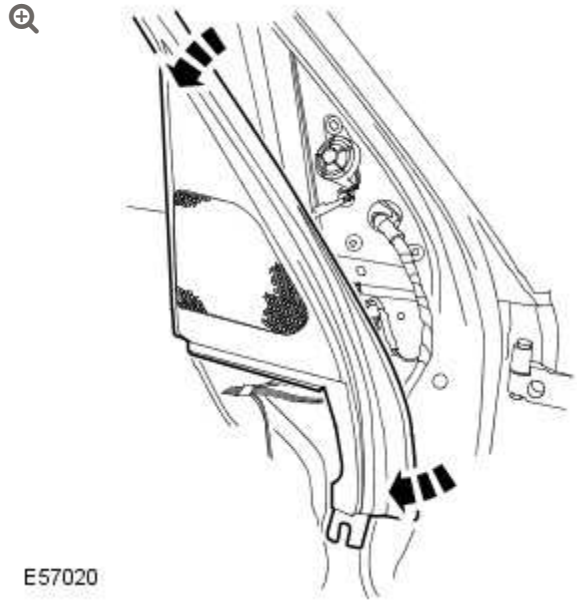

Secure the window surround trim panel.

3. Install the front door trim panel.
   For additional information, refer to: Front Door Trim Panel (501-05, Removal and Installation).

4. Connect the battery ground cable.
   For additional information, refer to: Specifications (414-00, Specifications).

CONTROL COMPONENTS

BLOWER MOTOR RESISTOR – LHD AWD (G910453)

REMOVAL AND INSTALLATION

REMOVAL

WARNINGS:

- Persons working on the supplemental restraint system (SRS) must be fully trained and have been issued with the safety guidelines.
- Allow a period of 10 minutes to elapse after disconnecting the battery before undertaking any work on the SRS.
- The SRS electrical connectors are unique. DO NOT force, or attempt to connect electrical connectors to the wrong sockets.
- The correct procedures must always be used when working on SRS components.
- It is imperative that before any work is undertaken on the SRS system, the appropriate information is read thoroughly.
- Always disconnect both battery cables before beginning work on the SRS system. Disconnect the ground cable first. Never reverse connect the battery.
- Take extra care when handling SRS components.

1. Disconnect the battery ground cable.
   For additional information, refer to: Specifications (414-00, Specifications).

2. Remove the lower glove compartment.
   For additional information, refer to: Lower Glove Compartment (501-12, Removal and Installation).

3.

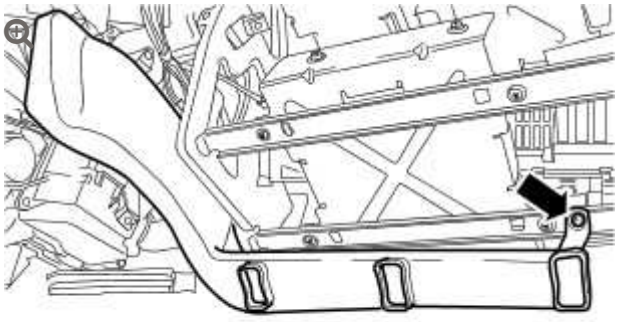

E82189

Remove the right-hand footwell duct.

- Remove the screw.

4. 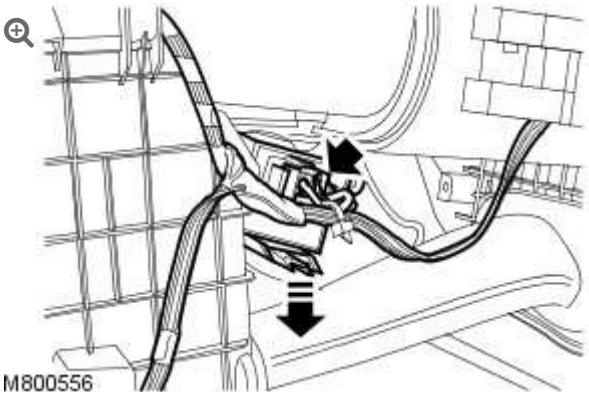

M800556

Disconnect the blower motor resistor electrical connector.

5. Remove the blower motor resistor.
   - Release the retaining clip.

INSTALLATION

1. Install the blower motor resistor.
2. Connect the blower motor resistor electrical connector.
3. Install the right-hand footwell duct.
   - Install the screw.

4. Install the lower glove compartment.
   For additional information, refer to: Lower Glove Compartment (501-12, Removal and Installation).

5. Connect the battery ground cable.
   For additional information, refer to: Specifications (414-00, Specifications).

CONTROL COMPONENTS

CLIMATE CONTROL ASSEMBLY (G1652215)

REMOVAL AND INSTALLATION

80.10.02	CONTROLS - CLIMATE - RENEW	ALL DERIVATIVES	0.3	USED WITHINS +

REMOVAL

NOTES:

- On high line models the climate control module is an integral part of the climate control assembly.
- Removal steps in this procedure may contain installation details.

1.

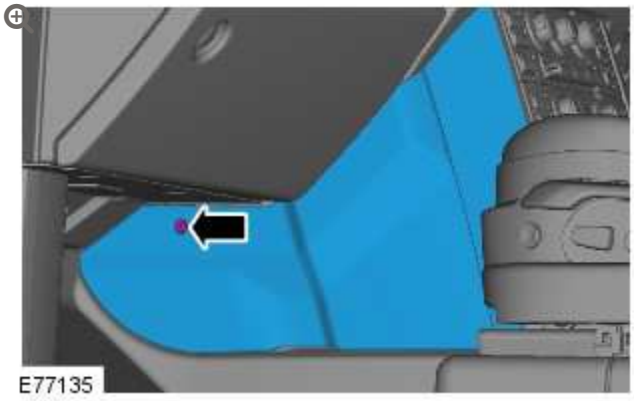

Remove the LH floor console extension. Repeat for the other side.

- Remove the screw.
- Release the 2 clips.

2.

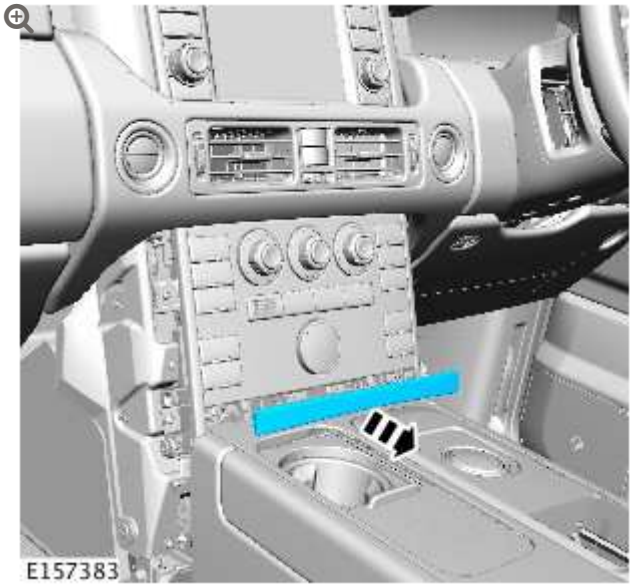

Remove the lower fascia trim.

3.

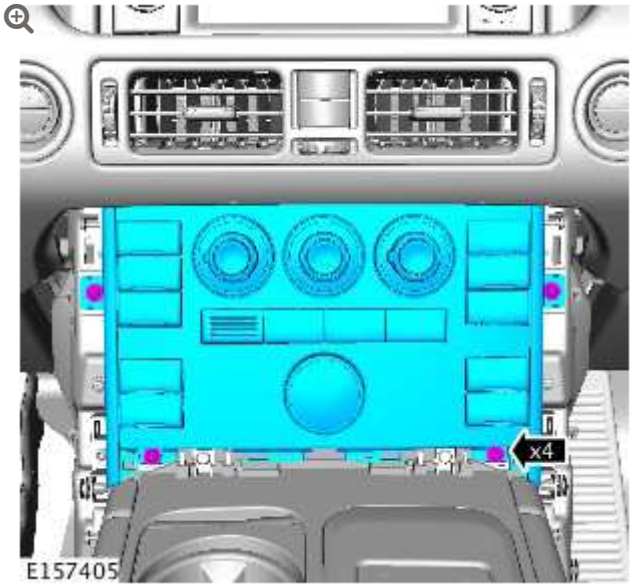

Remove the retaining screws.

4.

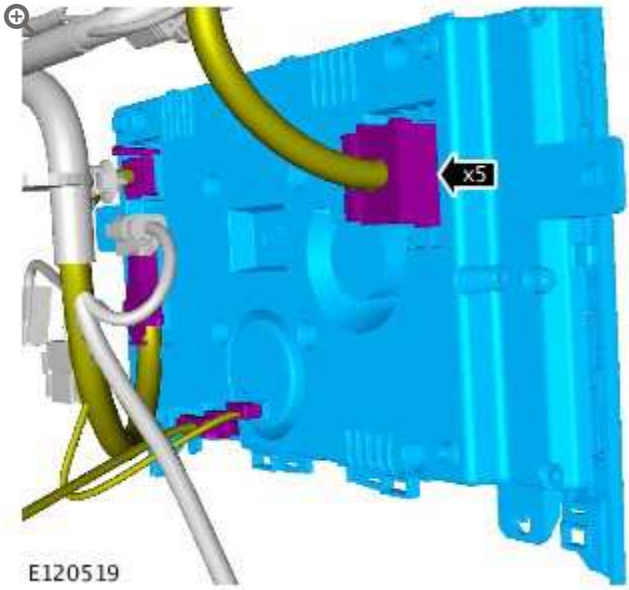

Remove the climate control assembly.

- Disconnect the electrical connectors.

5.

NOTE:

Do not disassemble further if removed for access only.

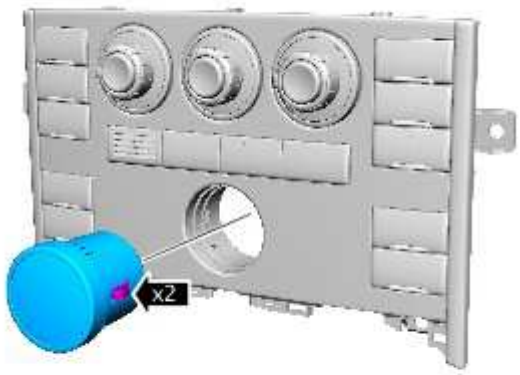

E157382

INSTALLATION

1. To install reverse the removal sequence.
   - Tighten retaining screws to 2 Nm
2. Using the Land Rover approved diagnostic system, calibrate a new climate control assembly.

2012.0 RANGE ROVER (LM), 412-04

CONTROL COMPONENTS

DIAGNOSIS AND TESTING

For additional information.

REFER to: Climate Control System (412-00, Diagnosis and Testing).

CONTROL COMPONENTS

DEFROST VENT/REGISTER BLEND DOOR ACTUATOR (G1653243)

REMOVAL AND INSTALLATION

80.10.36	MOTOR - DEFROSTER - WINDSHIELD - RENEW	LEFT HAND DRIVE	0.2	USED WITHINS	+

REMOVAL

ℹ	Left-hand drive vehicles

1. **NOTE:**

   LHD illustration shown, RHD is similar.

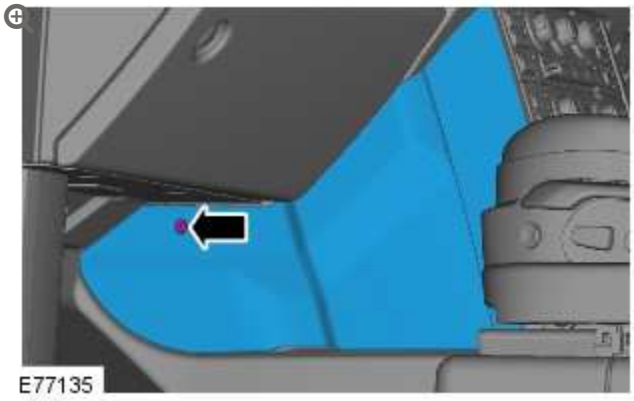

Remove the driver side floor console extension.

- Remove the screw.
- Release the 2 clips.

2.

NOTE:

LHD illustration shown, RHD is similar.

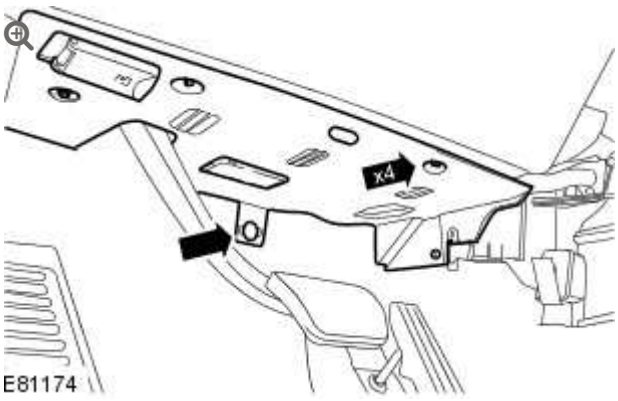

Release the driver side closing trim panel.

- Remove the 4 screws.
- Remove the clip.

3.

NOTE:

LHD illustration shown, RHD is similar.

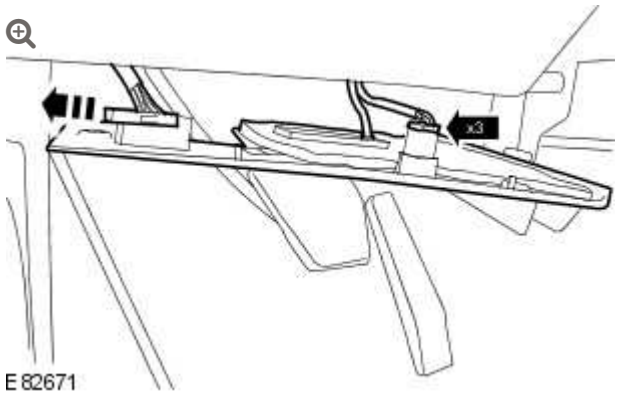

Remove the driver side closing trim panel.

- Disconnect the 2 electrical connectors.
- Release the vehicle diagnostic socket.

	Right-hand drive vehicles

4.

NOTE:

LHD illustration shown, RHD is similar.

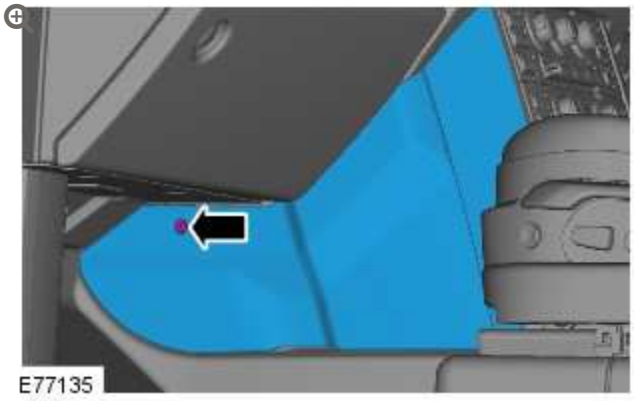

Remove the passenger side floor console extension.

- Remove the screw.
- Release the 2 clips.

5.

NOTE:

LHD illustration shown, RHD is similar.

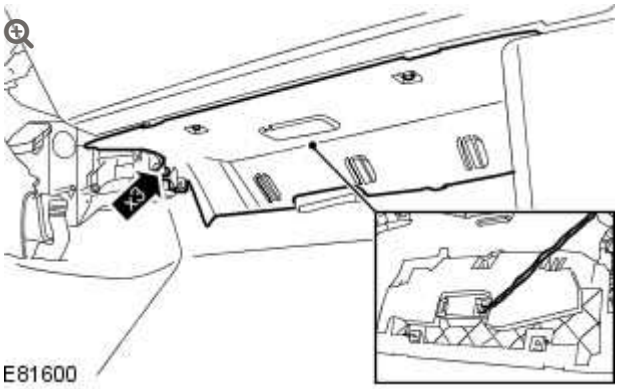

Remove the passenger side closing trim panel.

- Remove the 3 screws.
- Disconnect the footwell lamp electrical connector.

ℹ	All vehicles

6.

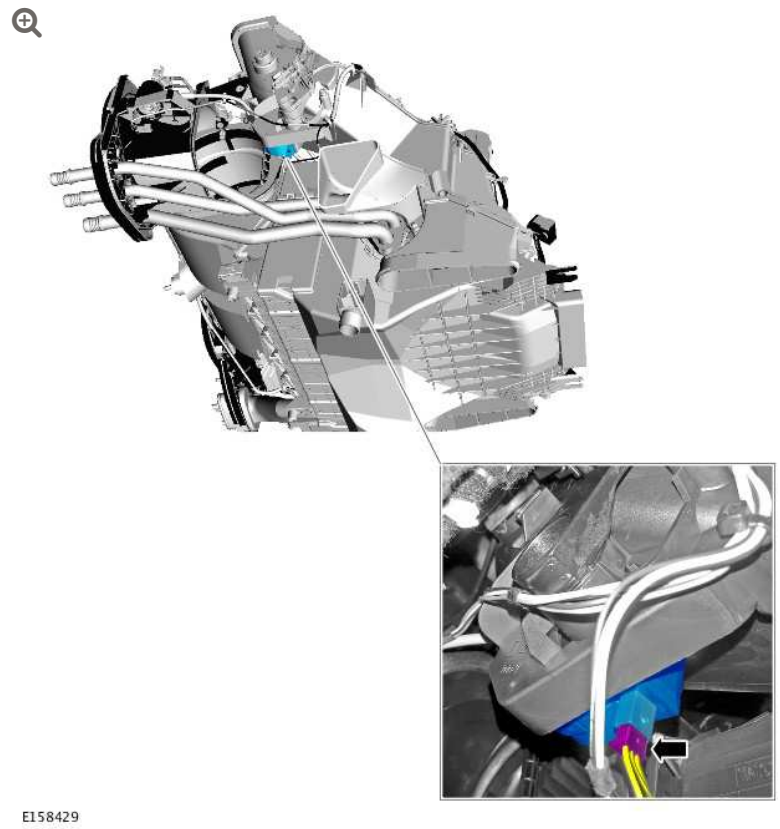

E158429

Remove the defrost vent blend door actuator.

- Disconnect the electrical connector.
- Release the clip.

INSTALLATION

	All vehicles

1. Install the defrost vent blend door actuator.
   - Connect the electrical connector.

	Left-hand drive vehicles

2. Install the driver side closing trim panel.
   - Connect the electrical connectors.

- Attach the vehicle diagnostic socket.

3. Secure the driver side closing trim panel.
   - Install the screws.
   - Install the clip.

4. Install the driver side floor console extension.
   - Secure the clips.
   - Install the screw.

ℹ	Right-hand drive vehicles

5. Install the passenger side closing trim panel.
   - Connect the footwell lamp electrical connector.
   - Install the screws.

6. Install the passenger side floor console extension.
   - Install the screw.
   - Secure the clips.

CONTROL COMPONENTS

DRIVER SIDE RECIRCULATION BLEND DOOR ACTUATOR (G1653244)

REMOVAL AND INSTALLATION

REMOVAL

WARNINGS:

- Persons working on the supplemental restraint system (SRS) must be fully trained and have been issued with the safety guidelines.
- Allow a period of 10 minutes to elapse after disconnecting the battery before undertaking any work on the SRS.
- The SRS electrical connectors are unique. DO NOT force, or attempt to connect electrical connectors to the wrong sockets.
- The correct procedures must always be used when working on SRS components.
- It is imperative that before any work is undertaken on the SRS system, the appropriate information is read thoroughly.
- Always disconnect both battery cables before beginning work on the SRS system. Disconnect the ground cable first. Never reverse connect the battery.
- Take extra care when handling SRS components.

	Left-hand drive vehicles

1. Make the air bag supplemental restraint system (SRS) safe.
   For additional information, refer to: Standard Workshop Practices (100-00 General Information, Description and Operation).

2. Disconnect the battery ground cable.
   For additional information, refer to: Specifications (414-00 Battery and Charging System - General Information, Specifications).

3. Remove the lower glove compartment.
   For additional information, refer to: Lower Glove Compartment (501-12 Instrument Panel and Console, Removal and Installation).

4. 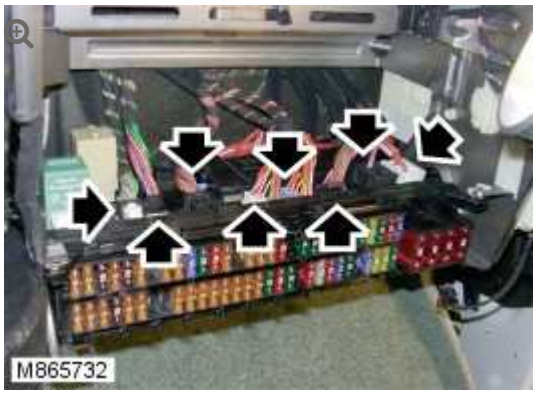

   Disconnect the central junction box (CJB) 8 electrical connectors.

5. Release the CJB from the in-vehicle crossbeam.
   - Remove the 4 screws.

	Right-hand drive vehicles

6. **NOTE:**

   Left-hand shown, right-hand similar.

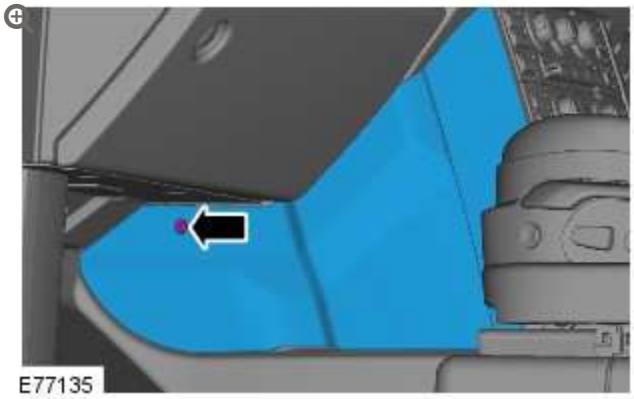

Remove the driver side floor console extension.

- Remove the screw.
- Release the 2 clips.

7.

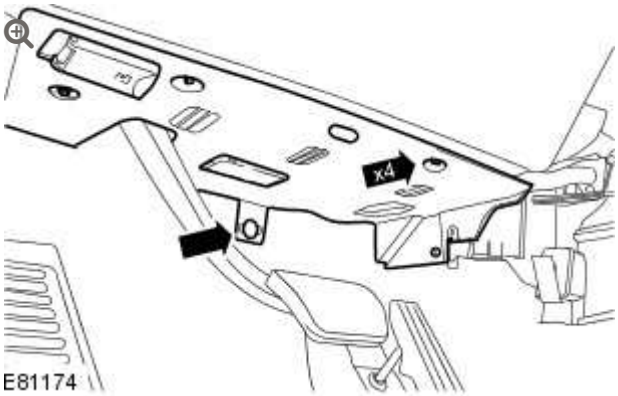

Release the driver side closing trim panel.

- Remove the 4 screws.
- Remove the clip.

8.

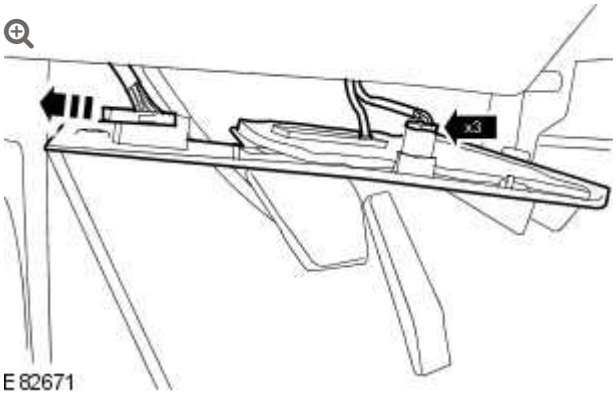

Remove the driver side closing trim panel.

- Disconnect the 2 electrical connectors.
- Release the vehicle diagnostic socket.

All vehicles

9.

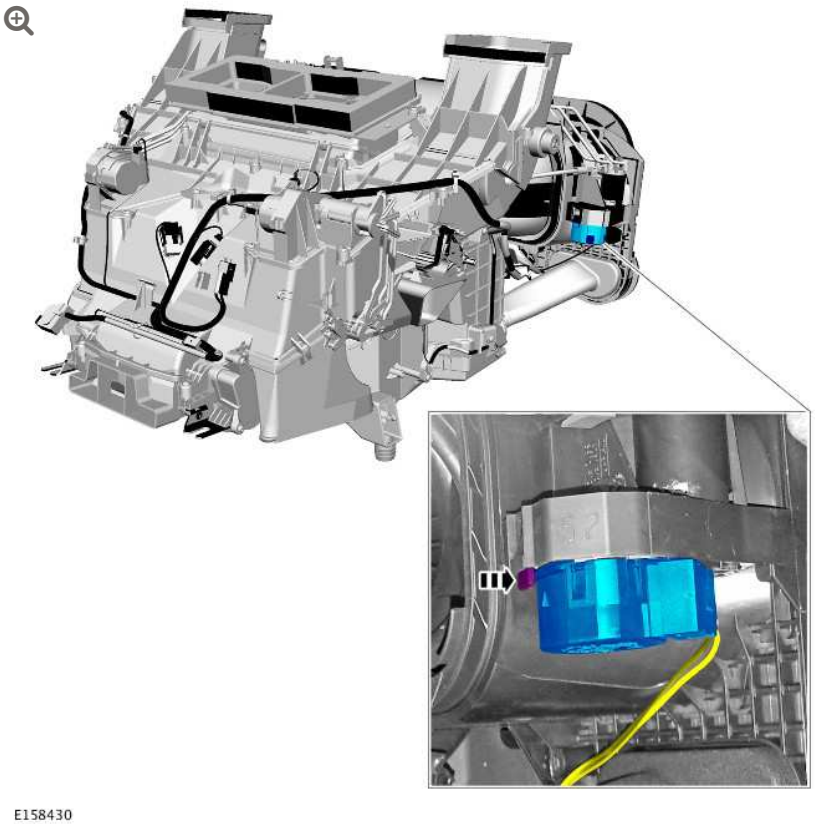

Remove the recirculation blend door actuator.

- Disconnect the electrical connector.

INSTALLATION

ℹ	All vehicles

1. Install the recirculation blend door actuator.
   - Connect the electrical connector.

ℹ	Left-hand drive vehicles

2. Install the CJB.
   - Install the screws.
3. Connect the CJB electrical connectors.

ℹ	Right-hand drive vehicles

4. Install the driver side closing trim panel.
   - Connect the electrical connectors.
   - Attach the vehicle diagnostic socket.
5. Secure the driver side closing trim panel.
   - Install the screws.
   - Install the clip.
6. Install the driver side floor console extension.
   - Secure the clips.
   - Install the screw.
7. Install the lower glove compartment.
   For additional information, refer to: Lower Glove

Compartment (501-12 Instrument Panel and Console, Removal and Installation).

8. Disconnect the battery ground cable.
   For additional information, refer to: Specifications (414-00 Battery and Charging System - General Information, Specifications).

CONTROL COMPONENTS

FOOTWELL VENT/DUCT BLEND DOOR ACTUATOR

(G1653245)

REMOVAL AND INSTALLATION

REMOVAL

WARNINGS:

- Persons working on the supplemental restraint system (SRS) must be fully trained and have been issued with the safety guidelines.
- Allow a period of 10 minutes to elapse after disconnecting the battery before undertaking any work on the SRS.
- The SRS electrical connectors are unique. DO NOT force, or attempt to connect electrical connectors to the wrong sockets.
- The correct procedures must always be used when working on SRS components.
- It is imperative that before any work is undertaken on the SRS system, the appropriate information is read thoroughly.
- Always disconnect both battery cables before beginning work on the SRS system. Disconnect the ground cable first. Never reverse connect the battery.
- Take extra care when handling SRS components.

1. Make the air bag supplemental restraint system (SRS) safe.
   For additional information, refer to: Standard Workshop Practices (100-00 General Information, Description and Operation).

2. Disconnect the battery ground cable.
   For additional information, refer to: Specifications (414-00 Battery and Charging System - General Information, Specifications).

3.

Remove the climate controlled seat switch.

For additional information, refer to: Climate Controlled Seat Switch (501-10 Seating, Removal and Installation).

4. Remove the floor console.

   For additional information, refer to: Floor Console - TDV8 3.6L Diesel/V8 5.0L Petrol/V8 S/C 5.0L Petrol (501-12 Instrument Panel and Console, Removal and Installation).

5. Remove the lower center registers panel assembly.

   For additional information, refer to: Lower Center Registers Panel Assembly (501-12 Instrument Panel and Console, Removal and Installation).

6. 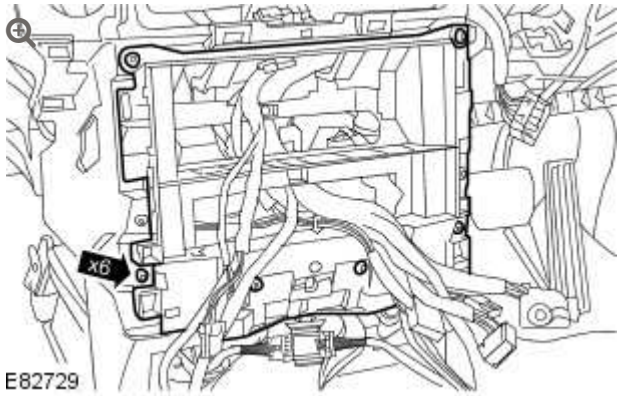

   Remove the instrument panel center reinforcement.

   - Remove the 6 screws.

7.

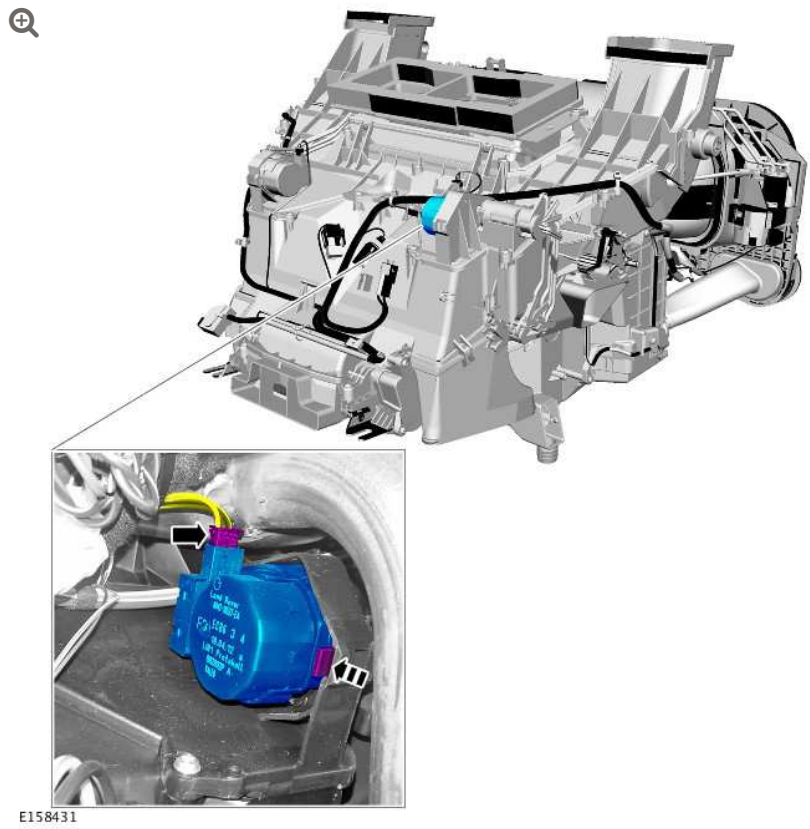
E158431

Remove the footwell duct blend door actuator.

- Disconnect the electrical connector.
- Release the clip.

INSTALLATION

1. Install the footwell duct blend door actuator.
   - Connect the electrical connector.
   - Secure the clips.
2. Install the instrument panel center reinforcement.
   - Install the screws.
3. Install the lower center registers panel assembly.
   For additional information, refer to: Lower Center Registers

Panel Assembly (501-12 Instrument Panel and Console, Removal and Installation).

4. Install the floor console.
   For additional information, refer to: Floor Console - TDV8 3.6L Diesel/V8 5.0L Petrol/V8 S/C 5.0L Petrol (501-12 Instrument Panel and Console, Removal and Installation).

5. Install the climate controlled seat switch.
   For additional information, refer to: Climate Controlled Seat Switch (501-10 Seating, Removal and Installation).

6. Connect the battery ground cable.
   For additional information, refer to: Specifications (414-00 Battery and Charging System - General Information, Specifications).

CONTROL COMPONENTS

IN-VEHICLE TEMPERATURE SENSOR

(G1648678)

REMOVAL AND INSTALLATION

82.20.93	SENSOR - AIR TEMPERATURE (ASPIRATOR TYPE) - AUTOMATIC TEMPERATURE CONTROL - RENEW	ALL DERIVATIVES	0.2	USED WITHINS	+

REMOVAL

1. The in-vehicle temperature sensor is an integral part of the climate control assembly.
   For additional information, refer to: Climate Control Assembly (412-04, Removal and Installation).

INSTALLATION

1. To install, reverse the removal procedure.

CONTROL COMPONENTS

PASSENGER SIDE RECIRCULATION BLEND DOOR ACTUATOR (G1653246)

REMOVAL AND INSTALLATION

REMOVAL

WARNINGS:

- Persons working on the supplemental restraint system (SRS) must be fully trained and have been issued with the safety guidelines.
- Allow a period of 10 minutes to elapse after disconnecting the battery before undertaking any work on the SRS.
- The SRS electrical connectors are unique. DO NOT force, or attempt to connect electrical connectors to the wrong sockets.
- The correct procedures must always be used when working on SRS components.
- It is imperative that before any work is undertaken on the SRS system, the appropriate information is read thoroughly.
- Always disconnect both battery cables before beginning work on the SRS system. Disconnect the ground cable first. Never reverse connect the battery.
- Take extra care when handling SRS components.

	Right-hand drive vehicles

1. Make the air bag supplemental restraint system (SRS) safe.
   For additional information, refer to: Standard Workshop Practices (100-00 General Information, Description and Operation).

2. Disconnect the battery ground cable.
   For additional information, refer to: Specifications (414-00 Battery and Charging System - General Information, Specifications).

3. Remove the lower glove compartment.
   For additional information, refer to: Lower Glove Compartment (501-12 Instrument Panel and Console, Removal and Installation).

	Left-hand drive vehicles

4. **NOTE:**

   Left-hand shown, right-hand similar.

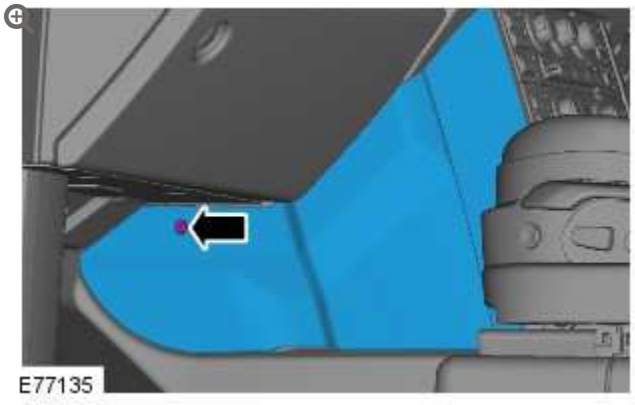

   Remove the driver side floor console extension.

   - Remove the screw.
   - Release the 2 clips.

5.

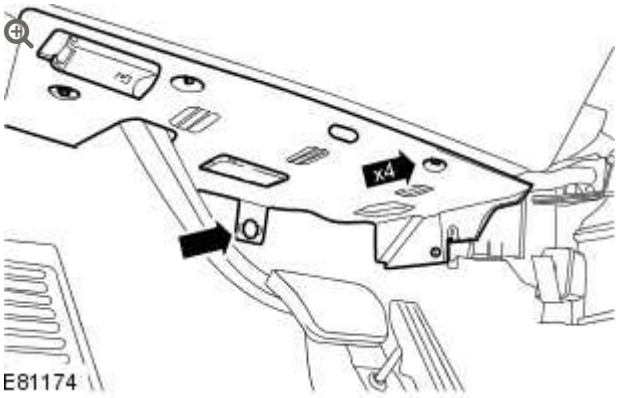

Release the driver side closing trim panel.

- Remove the 4 screws.
- Remove the clip.

6.

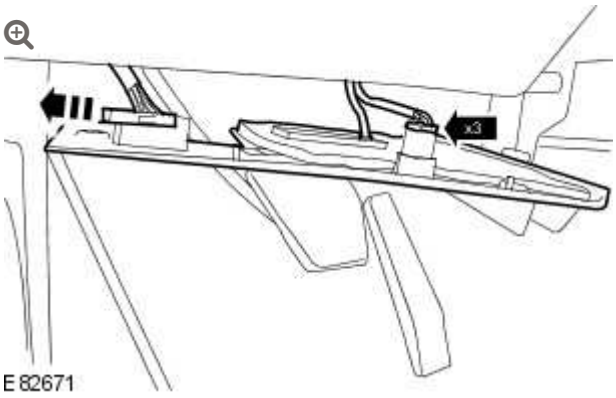

Remove the driver side closing trim panel.

- Disconnect the 2 electrical connectors.
- Release the vehicle diagnostic socket.

ℹ	All vehicles

7.

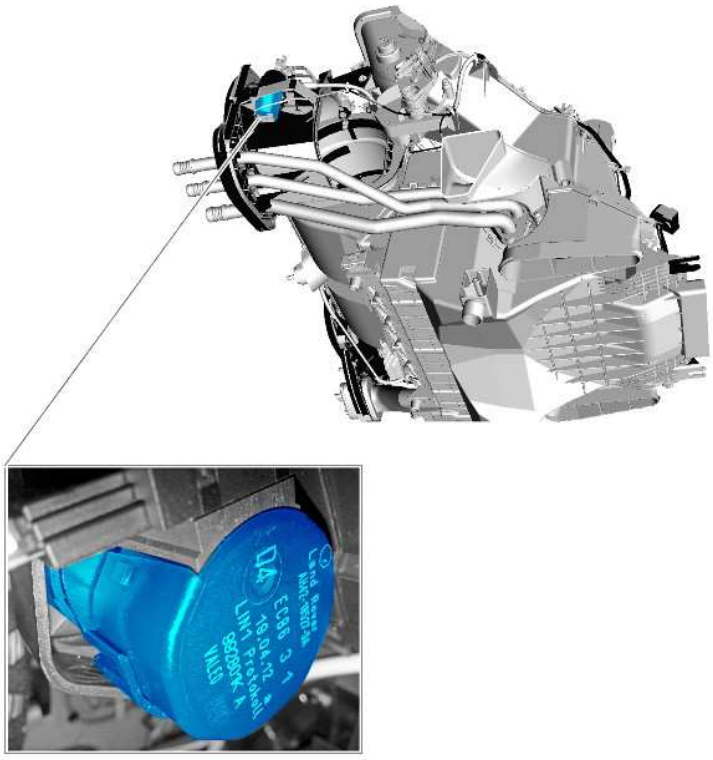

E158433

Remove the recirculation blend door actuator.

- Disconnect the electrical connector.

INSTALLATION

All vehicles

1. Install the recirculation blend door actuator.
   - Connect the electrical connector.

Left-hand drive vehicles

2. Install the driver side closing trim panel.
   - Attach the vehicle diagnostic socket.
   - Connect the electrical connectors.

3. Secure the driver side closing trim panel.
   - Install the screws.
   - Install the clip.

4. Install the driver side floor console extension.
   - Secure the clips.
   - Install the screw.

	Right-hand drive vehicles

5. Install the lower glove compartment.
   For additional information, refer to: Lower Glove Compartment (501-12 Instrument Panel and Console, Removal and Installation).

6. Connect the battery ground cable.
   For additional information, refer to: Specifications (414-00 Battery and Charging System - General Information, Specifications).

CONTROL COMPONENTS

SUNLOAD SENSOR (G1240222)

REMOVAL AND INSTALLATION

REMOVAL

NOTE:

Removal steps in this procedure may contain installation details.

1. Refer to: Standard Workshop Practices (100-00, Description and Operation).
2. Disconnect the battery ground cable.
   Refer to: Specifications (414-00, Specifications).
3. Refer to: Instrument Panel Reinforcement (501-12, Removal and Installation).
4.

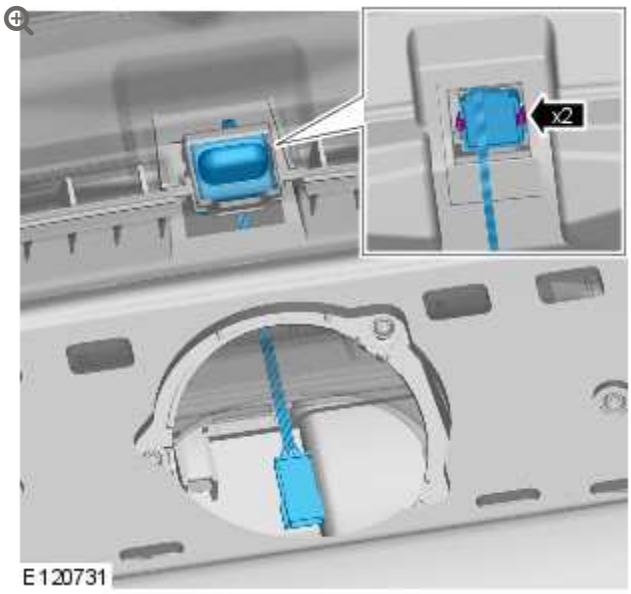

INSTALLATION

1. To install, reverse the removal procedure.

CONTROL COMPONENTS

TEMPERATURE BLEND DOOR ACTUATOR (G1653248)

REMOVAL AND INSTALLATION

REMOVAL

WARNINGS:

- Persons working on the supplemental restraint system (SRS) must be fully trained and have been issued with the safety guidelines.
- Allow a period of 10 minutes to elapse after disconnecting the battery before undertaking any work on the SRS.
- The SRS electrical connectors are unique. DO NOT force, or attempt to connect electrical connectors to the wrong sockets.
- The correct procedures must always be used when working on SRS components.
- It is imperative that before any work is undertaken on the SRS system, the appropriate information is read thoroughly.
- Always disconnect both battery cables before beginning work on the SRS system. Disconnect the ground cable first. Never reverse connect the battery.
- Take extra care when handling SRS components.

1. Make the air bag supplemental restraint system (SRS) safe.
   For additional information, refer to: Standard Workshop Practices (100-00 General Information, Description and Operation).

2. Disconnect the battery ground cable.
   For additional information, refer to: Specifications (414-00 Battery and Charging System - General Information, Specifications).

3.

Remove the climate controlled seat switch.

For additional information, refer to: Climate Controlled Seat Switch (501-10 Seating, Removal and Installation).

4. Remove the floor console.

   For additional information, refer to: Floor Console - TDV8 3.6L Diesel/V8 5.0L Petrol/V8 S/C 5.0L Petrol (501-12 Instrument Panel and Console, Removal and Installation).

5. Remove the lower center registers panel assembly.

   For additional information, refer to: Lower Center Registers Panel Assembly (501-12 Instrument Panel and Console, Removal and Installation).

6. 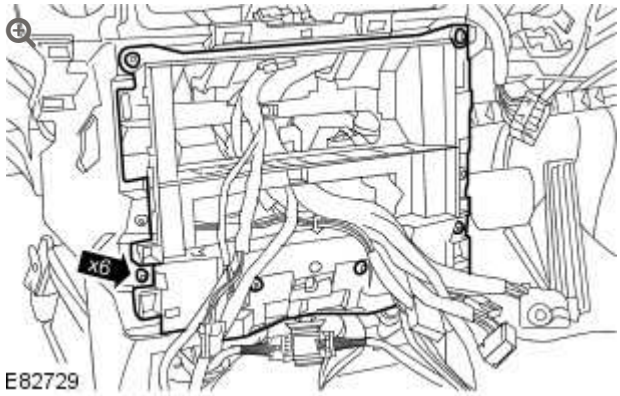

   Remove the instrument panel center reinforcement.

   - Remove the 6 screws.

7.

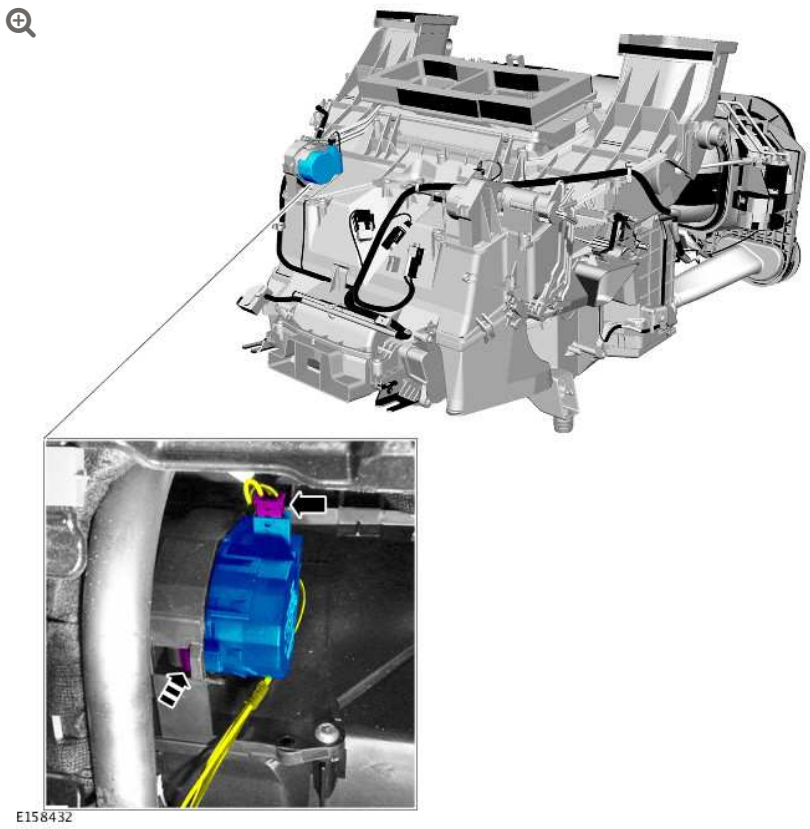

Remove the footwell duct blend door actuator.

- Disconnect the electrical connector.
- Release the clip.

INSTALLATION

1. Install the footwell duct blend door actuator.
   - Connect the electrical connector.
   - Secure the clips.
2. Install the instrument panel center reinforcement.
   - Install the screws.
3. Install the lower center registers panel assembly.
   For additional information, refer to: Lower Center Registers

Panel Assembly (501-12 Instrument Panel and Console, Removal and Installation).

4. Install the floor console.
   For additional information, refer to: Floor Console - TDV8 3.6L Diesel/V8 5.0L Petrol/V8 S/C 5.0L Petrol (501-12 Instrument Panel and Console, Removal and Installation).

5. Install the climate controlled seat switch.
   For additional information, refer to: Climate Controlled Seat Switch (501-10 Seating, Removal and Installation).

6. Connect the battery ground cable.
   For additional information, refer to: Specifications (414-00 Battery and Charging System - General Information, Specifications).

REFRIGERATION

DESCRIPTION AND OPERATION

REAR FLOOR CONSOLE CHILLER UNIT – RANGE ROVER ULTIMATE

COMPONENT LOCATION

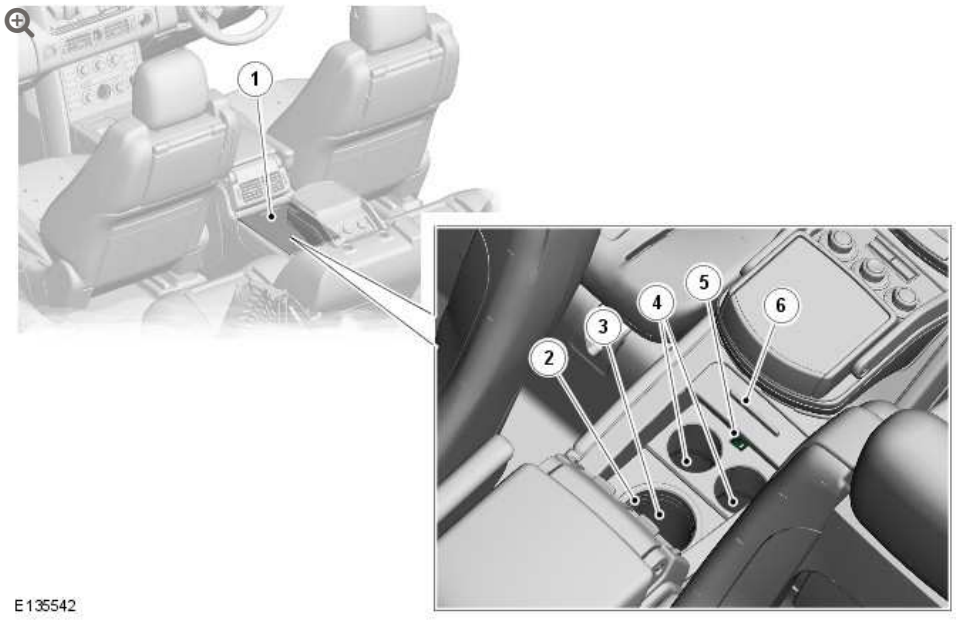

ITEM	DESCRIPTION
1	Chiller unit location
2	Bottle holder illumination ring
3	Bottle holder tube
4	Champagne flute tubes
5	Thermo-electric cooler on/off switch

ITEM	DESCRIPTION
6	Sliding cover

DESCRIPTION

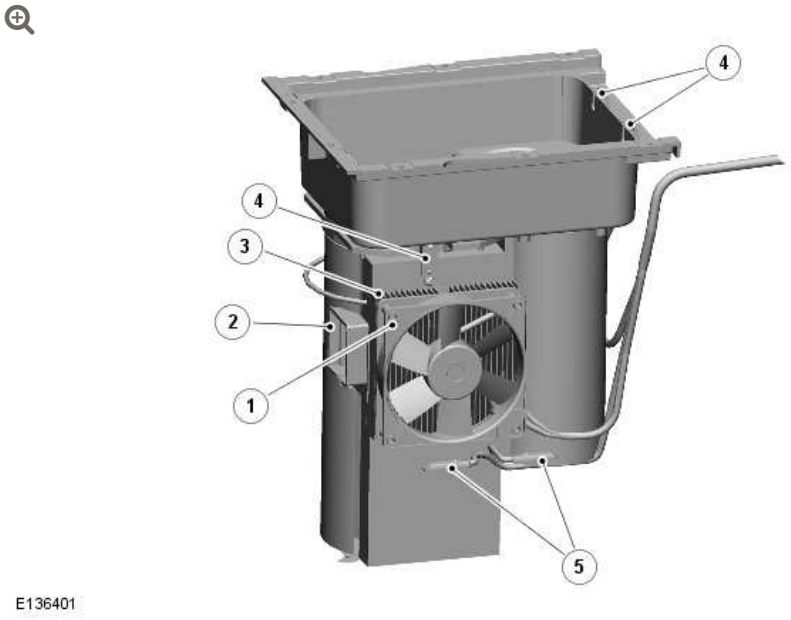

ITEM	DESCRIPTION
1	Fan assembly
2	Printed Circuit Board (PCB)
3	Heatsink and Peltier cell assembly
4	Bottle tube illumination ring and champagne flute tube illumination LEDs (4 off)
5	Mood lighting LEDs

A drink chiller unit is incorporated in the front section of the rear floor console assembly. The chiller compartment has two small tubes for the location of two champagne flutes and a larger tube for a bottle. The compartment is leather lined with a veneer sliding lid.

A switch at the rear of the compartment switches a thermo-electric chiller on and off. An LED (light emitting diode) in the switch shows

when the chiller is active. The chiller will operate when either the battery saver relay or infotainment relay in the CJB (central junction box) is energized. This allows the chiller to begin cooling as soon as the vehicle is unlocked or alternatively, to continue cooling when the ignition is turned off but the infotainment system remains active. The chiller can reduce the temperature in the compartment by approximately 8°C (12.4°F) below the ambient temperature inside the vehicle.

Power to the chiller unit is provided by a relay in the rear entertainment junction box located in the RH (right-hand) side of the luggage compartment, behind the trim panel. The ground for the relay is controlled by the Rear Entertainment Control Module (RECM) and the junction box relay receives a fused power supply from the vehicle battery via the RJB (rear junction box). The rear entertainment junction box contains two fuses; a 5A fuse for power supply to the Rear Entertainment Control Module (RECM) and a 10A fuse for power supply to the following components:

- rear floor console mood lighting LED's
- stowage box illumination LED's
- chiller unit
- rear seat audio control relay
- rear seat audio control switches.

The chiller unit illumination LED's are powered by the RECM at an illumination level determined by the instrument panel dimmer control. Two LED's are located at the rear of the box and illuminate the area of the champagne flute tubes. Two further LED's illuminate a plastic ring around the top of the bottle holder tube.

OPERATION

Operation of the thermo-electric chiller unit is controlled by an on/off switch on the top front edge of the container. An LED in the on/off switch is illuminated while the chiller unit is selected on. The chiller unit contains a thermo-electric cooler which uses a Peltier cell. The Peltier cell is able to deliver cooling based on a voltage provided by via the chiller switch. The chiller unit contains a fan, which draws warm air away from the heatsink attached to the Peltier cell.

Peltier Cell

The thermo-electric chiller unit is a solid state heat pump that uses the Peltier cell to cool the inside of the chiller box. The Peltier effect occurs when a direct current is passed through a circuit of two dissimilar conductors, which are connected together at two junctions; this causes one junction to become cold and one junction to become hot. The potential difference between the two conductors creates an electric field at each junction; when a current is then applied to the circuit the charge flows against the direction of the electric field at one junction, causing it to absorb heat, and with the direction of the electric field at the other junction, causing it to release heat. In thermo-electric coolers, a number of these circuits (known as couples) are connected together, in series, and sandwiched between ceramic plates, then connected to a heatsink and fan. On the chiller unit, the cold side of the thermo-electric cooler is attached to the aluminum liner of the bottle holder and the heatsink and fan are installed on the insulating outer layer.

Peltier Effect Circuit

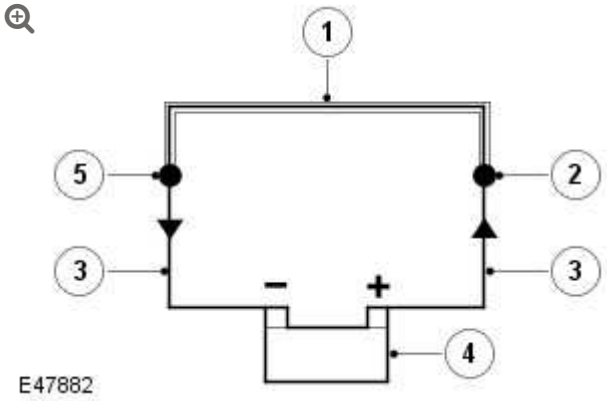

ITEM	DESCRIPTION
1	Conductor material
2	Hot junction
3	Conductor material
4	Power supply
5	Cold junction

CONTROL DIAGRAM

NOTE:

A = Hardwired

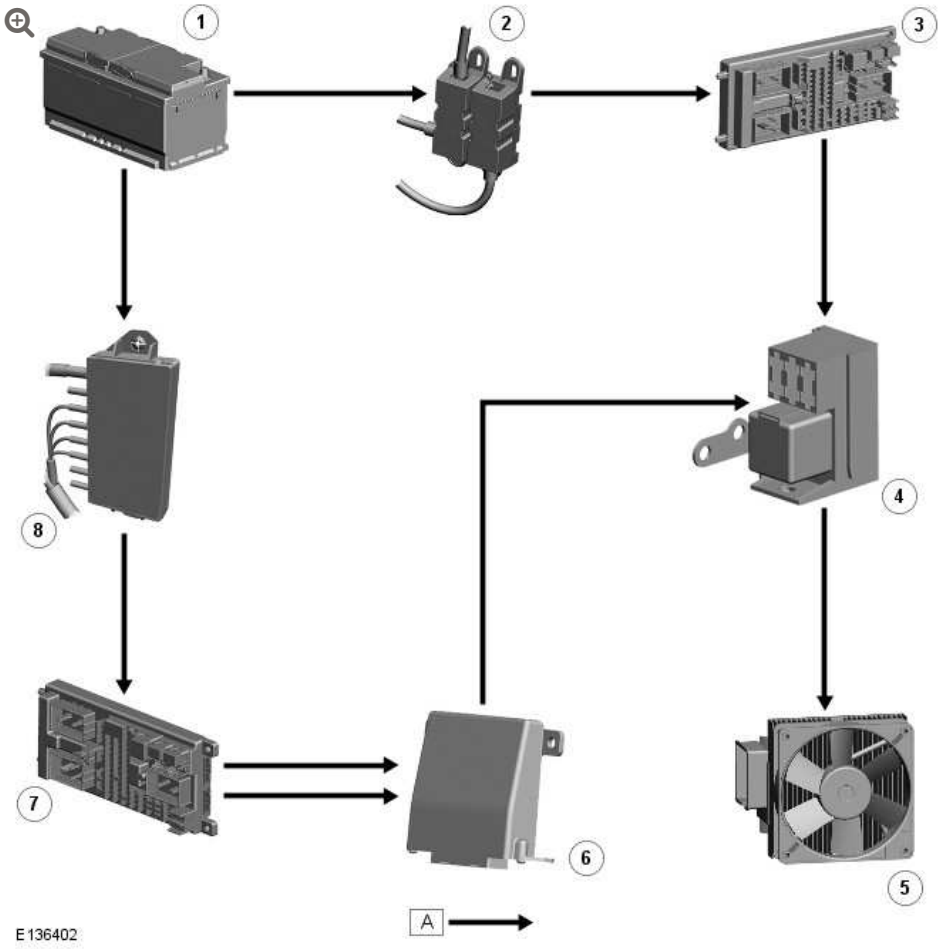

ITEM	DESCRIPTION
1	Battery
2	Battery Junction Box 2 (BJB2)
3	Rear Junction Box (RJB)
4	Rear entertainment junction box
5	Peltier cell and fan assembly
6	Rear Entertainment Control Module (RECM)
7	Central Junction Box (CJB)
8	Battery Junction Box (BJB)

REFRIGERATION AND CHILLER UNIT – ULTIMATE

(G1468512)

REMOVAL AND INSTALLATION

REMOVAL

NOTES:

- Removal steps in this procedure may contain installation details.
- Some variation in the illustrations may occur, but the essential information is always correct.

1. Refer to: Rear Seat Center Console (501-12 Instrument Panel and Console, Removal and Installation).
2.



3.

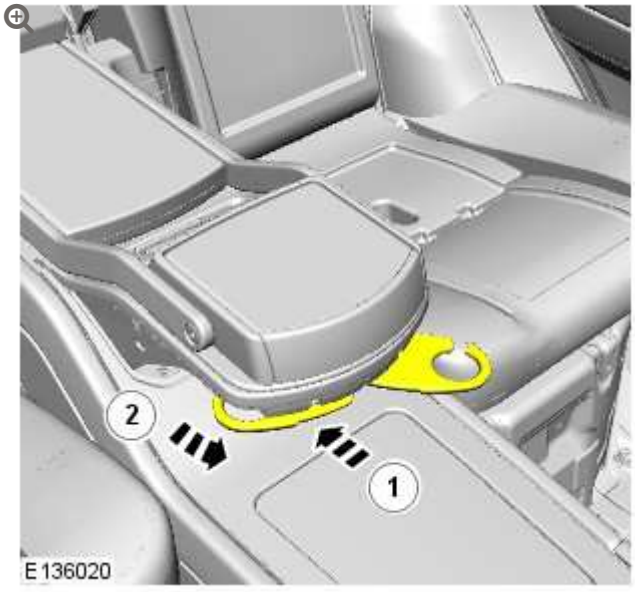

4.

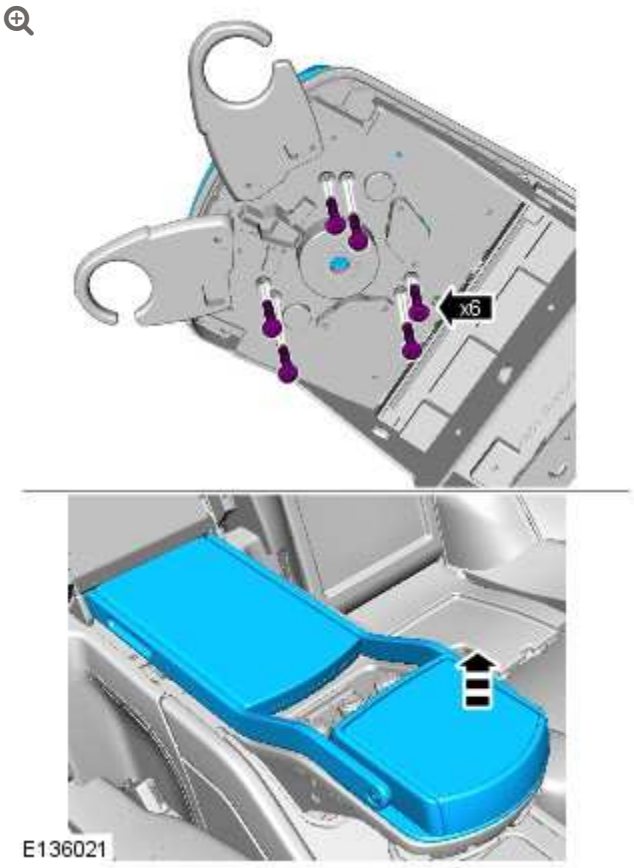

- *Torque:* **9 Nm**

5.



- *Torque:* **3 Nm**

6.

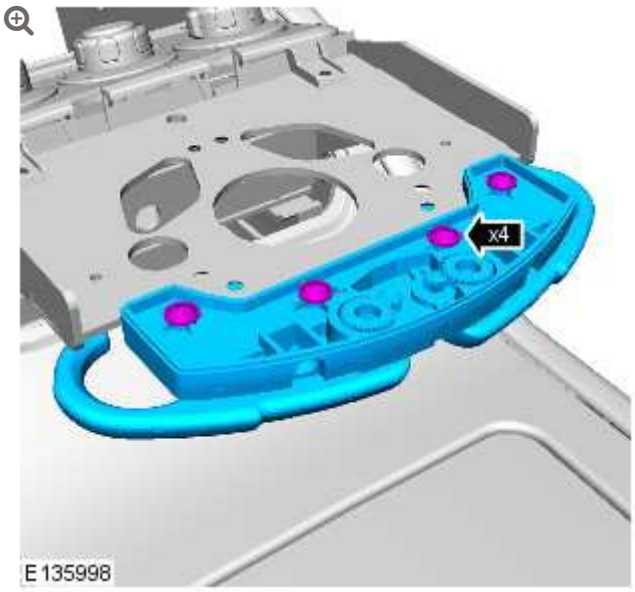

- *Torque:* **1 Nm**

7.

NOTE:

RH illustration shown, LH is similar.



8.

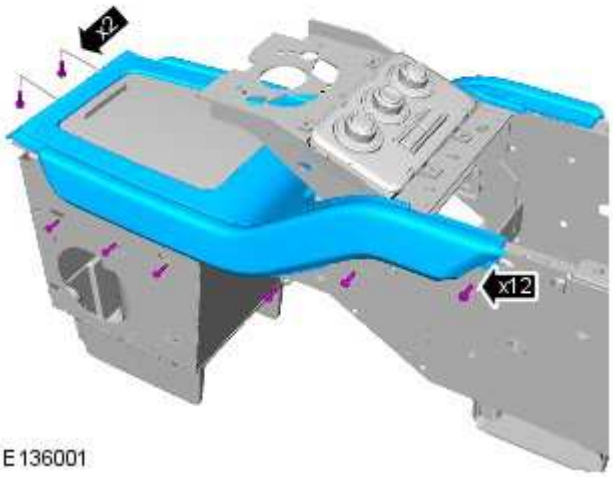

E136001

Torque:

Side **1.5 Nm**

Front **0.5 Nm**

9.



E136000

10.

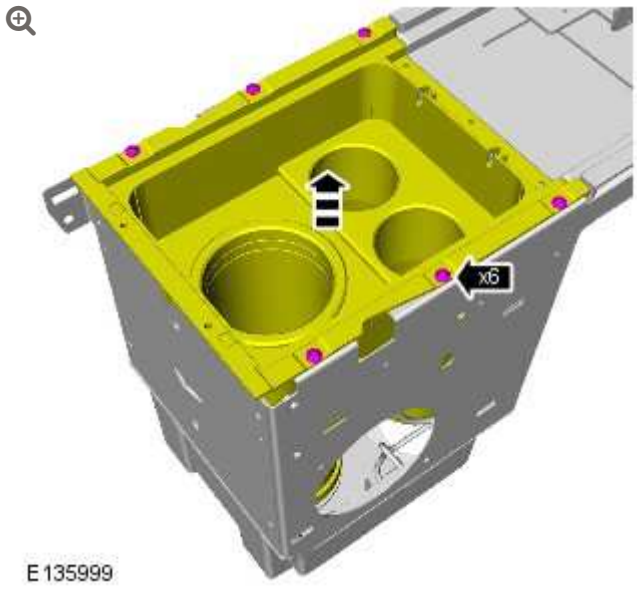

- *Torque:* **1.5 Nm**

11.

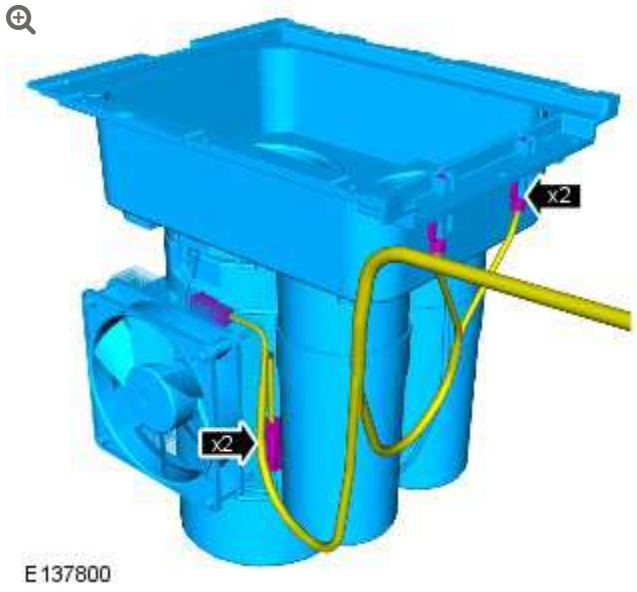

INSTALLATION

1. To install, reverse the removal procedure.

2012.0 RANGE ROVER (LM), 413-01

INSTRUMENT CLUSTER

SPECIFICATIONS

DESCRIPTION	NM	LB-FT
Steering column switch assembly	3	2

INSTRUMENT CLUSTER

DIAGNOSIS AND TESTING

For a detailed description of the Instrument Cluster system and operation, refer to the relevant Description and Operation section of the workshop manual. REFER to: Instrument Cluster (413-01 Instrument Cluster, Description and Operation).

INSPECTION AND VERIFICATION

1. Verify the customer concern.
2. Visually inspect for obvious signs of electrical damage.
3. With the ignition on, check the operation of the audio output from the instrument cluster integrated speakers by operating the turn signal indicators (left and right) and verifying that audible feedback (a ticking sound) is present.

Visual Inspection

ELECTRICAL
▪ Battery ▪ Fuses ▪ Central and battery junction boxes ▪ Megafuses ▪ Wiring harness ▪ Damaged, loose or corroded connectors

ELECTRICAL
▪ Controller Area Network (CAN) circuits ▪ Instrument Cluster ▪ Central Junction Box (CJB) ▪ Engine Control Module (ECM)

4. If an obvious cause for an observed or reported concern is found, correct the cause (if possible) before proceeding to the next step.

5. If the cause is not visually evident, check for Diagnostic Trouble Codes (DTCs) and refer to the DTC Index.

DTC INDEX

For a list of Diagnostic Trouble Codes (DTCs) that could be logged on this vehicle, please refer to Section 100-00. REFER to: Diagnostic Trouble Code (DTC) Index - DTC: Module Name: Restraints Control Module (100-00 General Information, Description and Operation).

INSTRUMENT CLUSTER

(G1240255)

REMOVAL AND INSTALLATION

REMOVAL

WARNINGS:

- Persons working on the supplemental restraint system (SRS) must be fully trained and have been issued with the safety guidelines.
- Allow a period of 10 minutes to elapse after disconnecting the battery before undertaking any work on the SRS.
- The SRS electrical connectors are unique. DO NOT force, or attempt to connect electrical connectors to the wrong sockets.
- The correct procedures must always be used when working on SRS components.
- It is imperative that before any work is undertaken on the SRS system, the appropriate information is read thoroughly.
- Always disconnect both battery cables before beginning work on the SRS system. Disconnect the ground cable first. Never reverse connect the battery.
- Take extra care when handling SRS components.

NOTE:

When a new instrument cluster is to be installed, the Land Rover approved diagnostic system must be connected to the vehicle and the instrument cluster renewal procedure followed. This will allow vehicle coding data and current service interval data to be correctly installed to the new instrument cluster.

1.

NOTE:

> Only carry out the following step if a new instrument cluster is to be installed.

Connect the Land Rover approved diagnostic system and begin the instrument cluster renewal procedure.

2. Refer to: Standard Workshop Practices (100-00 General Information, Description and Operation).

3. Disconnect the battery ground cable.
   Refer to: Specifications (414-00 Battery and Charging System - General Information, Specifications).

4. Refer to: Instrument Panel Upper Section (501-12 Instrument Panel and Console, Removal and Installation).

5. 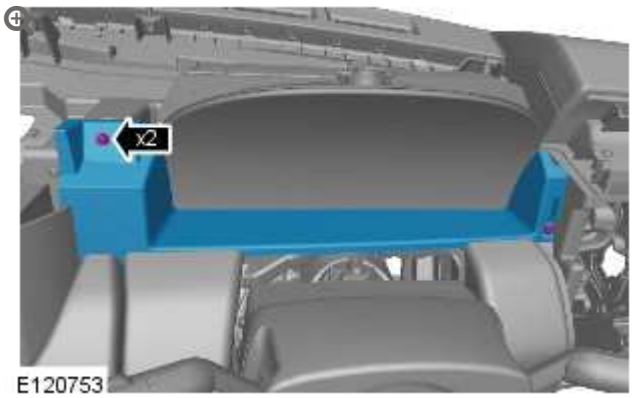

6.

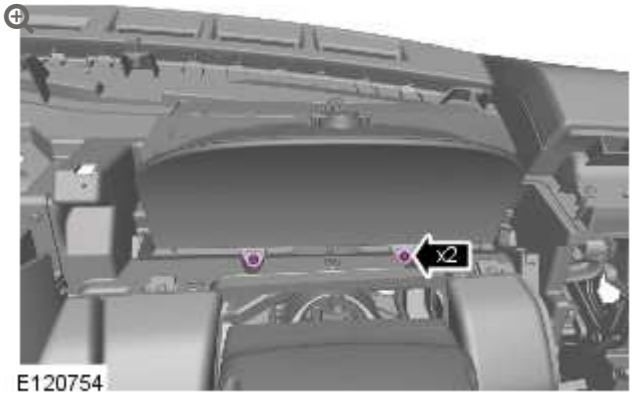

7.

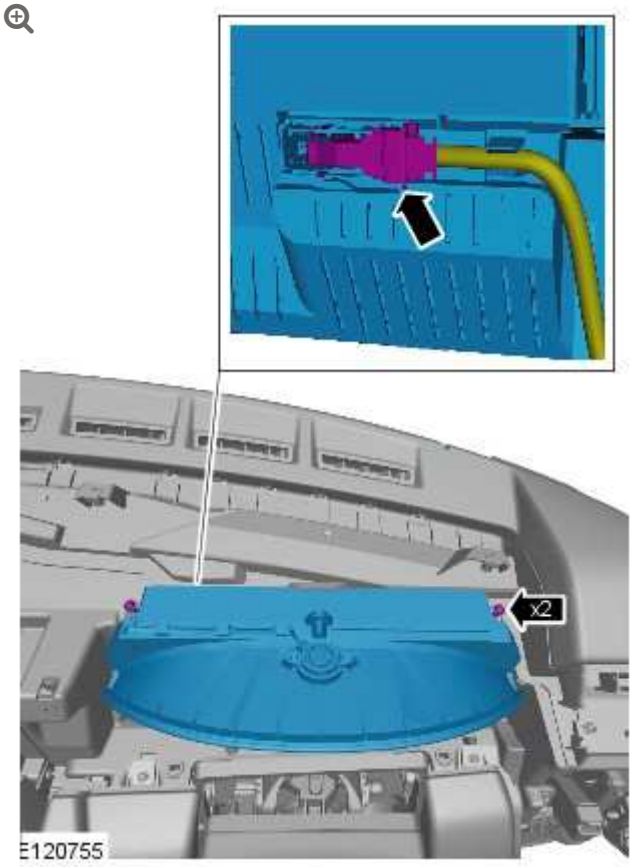

INSTALLATION

1. To install, reverse the removal procedure.

2.

If a new instrument cluster has been installed, configure the new instrument cluster using the Land Rover approved diagnostic system.

2012.0 RANGE ROVER (LM), 413-01

INSTRUMENT CLUSTER

DESCRIPTION AND OPERATION

INSTRUMENT CLUSTER – COMPONENT LOCATION

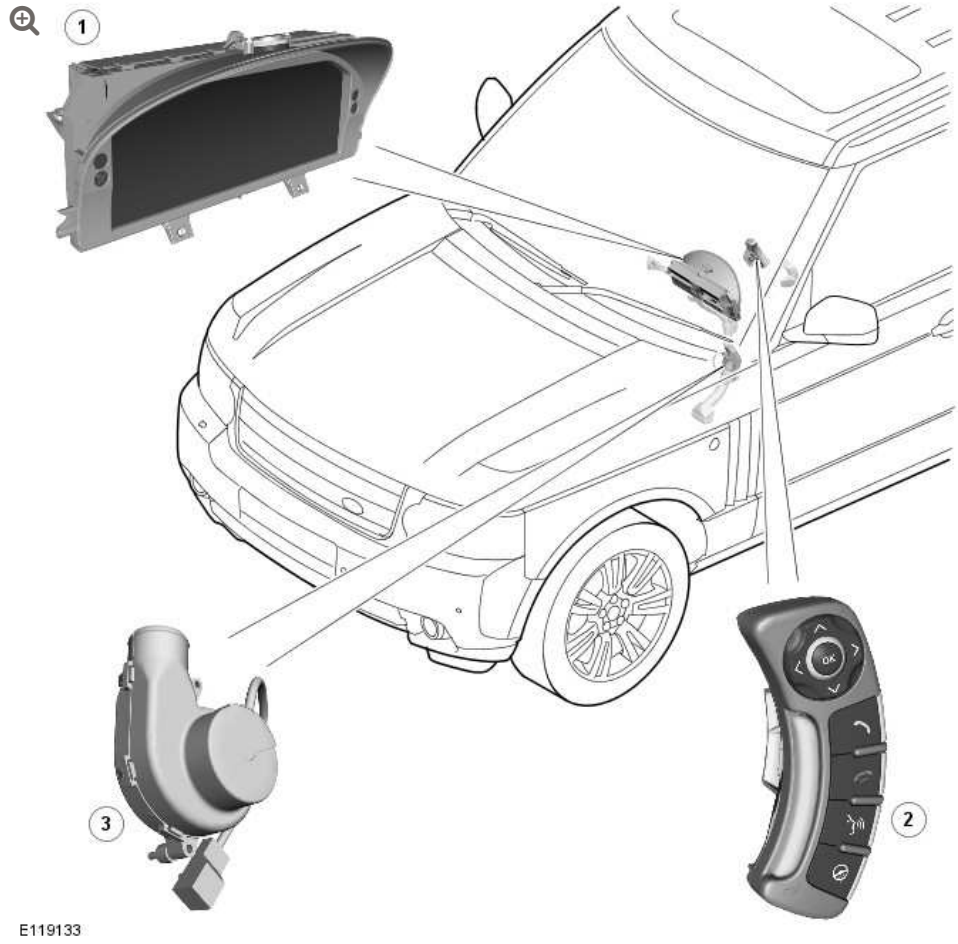

ITEM	DESCRIPTION
1	Instrument cluster
2	Instrument cluster menu control

ITEM	DESCRIPTION
3	Cooling fan

OVERVIEW

The instrument cluster for 2010MY is an all new high definition Thin Film Transistor (TFT) display.

Designed to look similar to a conventional instrument cluster for the main display, the new display can be continually reconfigured to prioritise and refine the information presented to the driver. All displays are 'virtual' gauges with the speedometer and the tachometer being the dominant features of the new display. Only 2 hardwired warning indicators remain; the airbag warning indicator and the security warning indicator. Both of these indicators are LED (light emitting diode)'s.

Two ambient light sensors; one on either side of the pack, (to ensure the brightest lighting conditions are detected) are used to adjust cluster illumination in response to prevailing lighting conditions.

The instrument cluster features a number of warning indicators. The warning indicators illuminate in one of four colors which indicate the level of importance of the warning as follows:

- Red = Warning
- Amber = Caution
- Green = System operative
- Blue = Headlamp high beam operative.

A feature and driver preference menu is available to allow the driver to select certain features and functions of the instrument cluster and change them to their personal preference. A menu control 'joy pad' is located on the RH (right-hand) side of the steering wheel and

allows selection of the displayed functions and navigation of the menus. When selected, the menu is displayed in the center of the TFT screen which allows access to a number of vehicle functions.

DESCRIPTION

WARNING INDICATORS

Warning Indicators - All Markets Except NAS

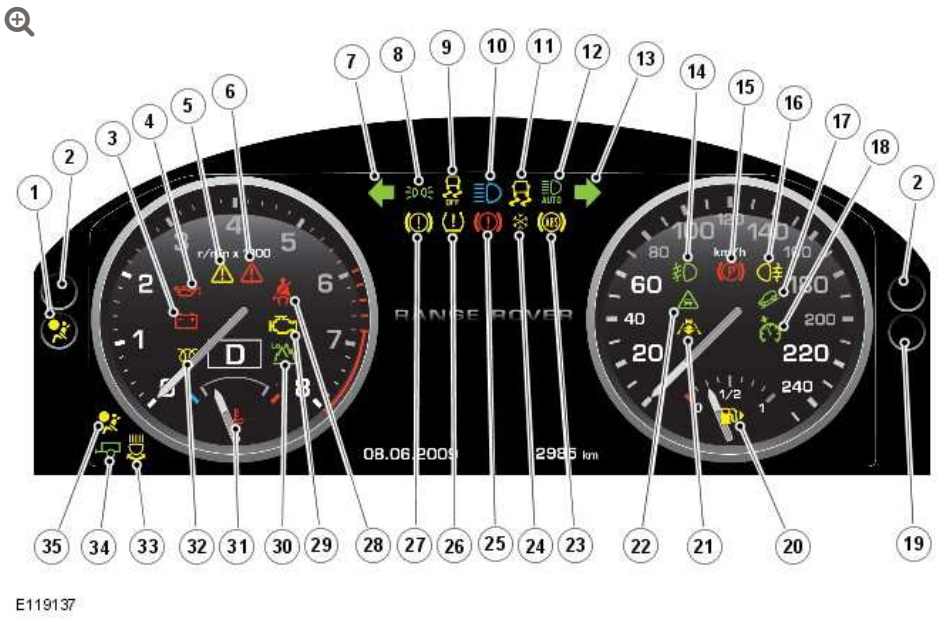

ITEM	DESCRIPTION
1	Airbag warning (amber)
2	Left Hand (LH) ambient light sensor (ref only)
3	Charge indicator (red)
4	Oil pressure warning (red) (diesel only)
5	Warning/information (amber)
6	Critical warning (red)
7	LH turn signal indicator (green)
8	Side lamps (green)
9	Dynamic Stability Control (DSC) off warning (amber)

ITEM	DESCRIPTION
10	High beam warning (blue)
11	DSC active warning (amber)
12	Automatic high beam active warning (amber)
13	Right Hand (RH) turn signal indicator
14	Front fog lamps active (green)
15	Park brake system warning (red)
16	Rear fog lamps active (amber)
17	Hill Descent Control (HDC) active (green)
18	Speed control active (green)
19	Security Light Emitting Diode (LED)
20	Low fuel warning (amber)
21	Adaptive Speed Control active (amber)
22	Forward alert active (green)
23	Anti-lock Brake System (ABS) warning (amber)
24	Frost warning (amber)
25	Brake system warning (red)
26	Tire pressure monitoring warning
27	Emergency brake assist warning (amber)
28	Seat belt warning (red)
29	Check engine MIL warning (amber)
30	Low range selected (green)
31	Oil temperature warning (red) (Diesel only)
32	Glow plug warning (amber)
33	Adaptive Front lighting System (AFS) warning (amber)
34	Trailer warning (green)
35	Airbag warning - secondary (amber)

Warning Indicators - NAS

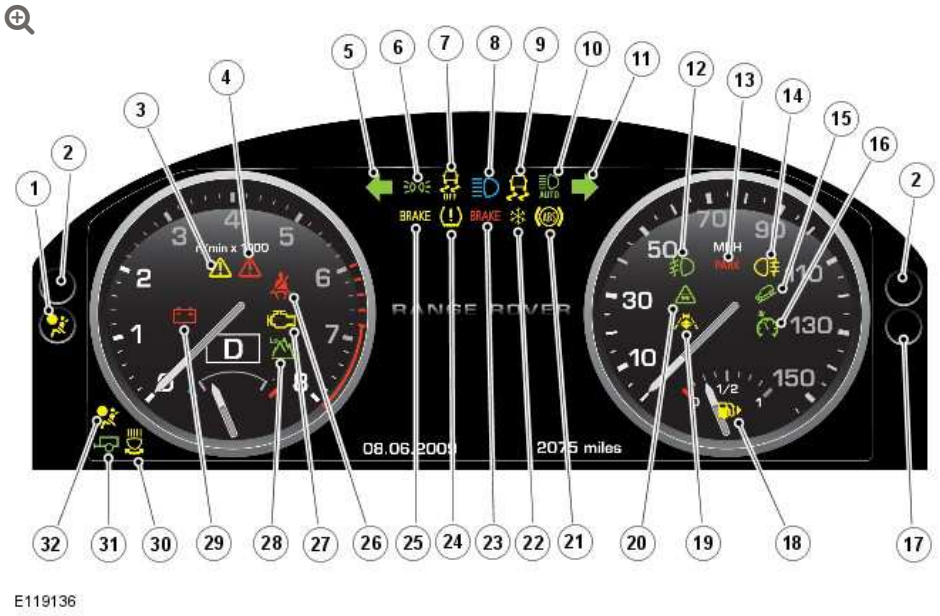

ITEM	DESCRIPTION
1	Airbag warning (amber)
2	Left Hand (LH) ambient light sensor (ref only)
3	Warning/information (amber)
4	Critical warning (red)
5	LH turn signal indicator (green)
6	Side lamps (green)
7	Dynamic Stability Control (DSC) off warning (amber)
8	High beam warning (blue)
9	DSC active warning (amber)
10	Automatic high beam active warning (amber)
11	Right Hand (RH) turn signal indicator
12	Front fog lamps active (green)
13	Park brake system warning (red)
14	Rear fog lamps active (amber)
15	Hill Descent Control (HDC) active (green)

ITEM	DESCRIPTION
16	Speed control active (green)
17	Security Light Emitting Diode (LED)
18	Low fuel warning (amber)
19	Adaptive Speed Control active (amber)
20	Forward alert active (green)
21	Anti-lock Brake System (ABS) warning (amber)
22	Frost warning (amber)
23	Brake system warning (red)
24	Tire pressure monitoring warning
25	Emergency brake assist warning (amber)
26	Seat belt warning (red)
27	Check engine MIL warning (amber)
28	Low range selected (green)
29	Charge indicator (red)
30	Adaptive Front lighting System (AFS) warning (amber)
31	Trailer warning (green)
32	Airbag warning - secondary (amber)

The warning indicators are mainly located in 3 groups; one in the speedometer display, one in the tachometer display and one group in a central position at the top of the TFT screen. A number of warning indicators are also located outside of these areas as shown on the illustrations.

There are 2 SRS (supplemental restraint system) warning indicators used. The primary SRS warning indicator is located on the LH (left-hand) side of the cluster and is a hardwired LED. A secondary SRS warning indicator is located to the bottom left of the speedometer

and is only used in case of failure of the primary warning indicator for legislation requirements.

A hardwired LED is located on the RH side of the cluster and is used for the security LED.

TFT DISPLAY



E118210

ITEM	DESCRIPTION
1	LH ambient light sensor
2	Primary SRS warning indicator
3	Actual size of TFT screen
4	RH ambient light sensor
5	Security LED

During a typical journey new events and priority messages can be continually updated on the display as and when required. For example, audio information displayed centrally can be replaced with the navigation instruction information or 4x4 information can be displayed in off road situations.

To ensure the brightest lighting conditions are detected, 2 ambient light sensors are located on each side of the cluster. They are used to adjust cluster illumination in response to prevailing lighting conditions. The cluster also has high-output bright LED backlighting and a smoked 'glass' screen which helps prevent washout by reducing the amount of sunlight that can reach the screen directly. The TFT display screen also incorporates an anti-glare coating.

The full TFT screen measures 312 mm (12.3 inches) across its diagonal corners and is specified with 1280 horizontal and 480 vertical pixels. Because of the design of the instrument cluster binacle, not all of the screen is visible but the graphics are designed to display within the viewable area.

START-UP SCREEN



E120550

When the vehicle is locked the display goes off. When the vehicle is unlocked the display slowly illuminates to show the background image and display key information to the driver.

Pressing the stop/start button will initiate a full build of the screen display to display the speedometer and tachometer and also the warning indicators. When the engine is running a range of applicable instruments, messages and warning indicators will be displayed.

EVENT SCREENS



E120322

A large number of differing permutations of screens are available to cover all possible combinations of the available functions. The above illustration shows the 4X4 screen, but other screens are available to cover a range of vehicle functions.

Certain vehicle functions will overwrite the existing information displayed. Certain displays may move or be replaced to allow room for other displays as shown in the 4X4 display above. For example, the speedometer may move to the right a little to allow room for important vehicle functional to be displayed.

A number of features are also used to convey information to the driver. For example, if speed control is selected, the set speed is displayed as a marker in the speedometer outer ring.

INSTRUMENT CLUSTER MENU



E119134

The instrument cluster menu is only visible when any part of the menu control has been pressed. Menu selections can be made using the menu control to select the required menu option.

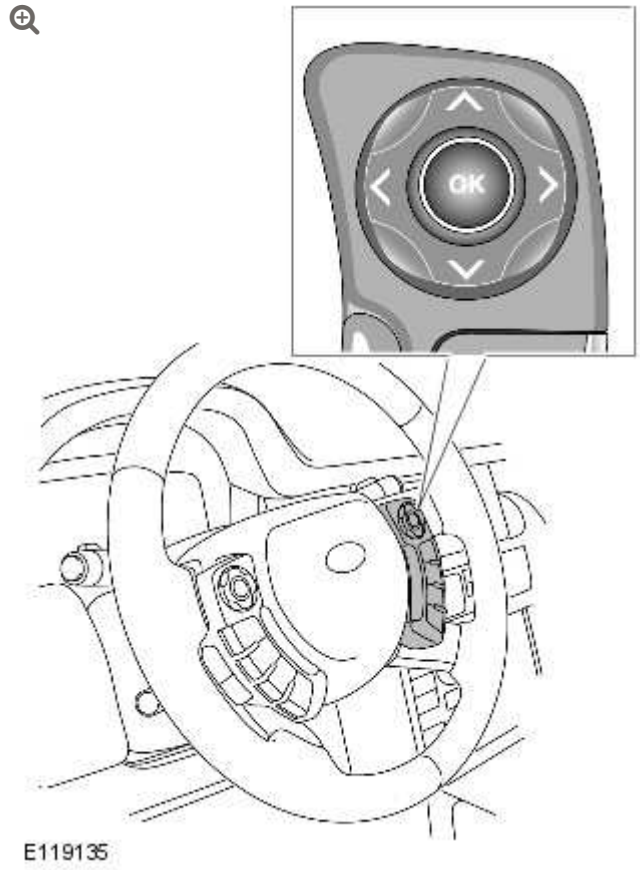

When the required selection is highlighted, pressing the 'OK' button will select that option. The screen will then display a sub-menu for that option or activate the selected item. Scroll arrows to the left of the menus allow the menu to be moved up or down to menu items that are not visible in the current view. If the arrow is displayed brightly this indicates that additional menu items are available in that direction.

The menu can be closed by pressing the left button on the menu control. If sub-menus are open, pressing and holding the left button on the menu control will close the sub-menus. The menu will close automatically if:

- no selection is made in the main menu within 10 seconds of opening
- a selection is made in the main menu and no further selection is made within 4 minutes. If a selection is made within the 4 minute period, the timer will reset and a further 4 minutes will elapse before the menu automatically closes if no further selections are made.

The current menu can be exited or to move from a sub-menu without making a selection, press the left arrow on the menu control.

The following table shows the available menus and sub-menus and the options available within each menu.

MAIN MENU	SUB-MENU	FUNCTION
Main Menu	-	Closes the vehicle set-up and information menu.
Show Warnings	-	Displays all active warning messages.
Vehicle Set-Up	Forward Alert	Enable/Disable forward alert.
	Blind Spot Monitor	Enable/Disable blind spot monitoring system.
	High Beam Assist	Enable/Disable the Auto High Beam feature. Can also be used to configure the system for driving on the opposite side of the road.
	TPM Load Setting	Change the monitored tire pressures for the vehicle loading conditions.
	Alarm Sensors	Temporarily disable the interior space protection and the tilt sensor for the next time the vehicle is locked. The setting is automatically re-enabled when the vehicle is unlocked using the smart key.
	Reverse Dip Mirror	Enable/Disable automatic dipping of the exterior mirrors when reverse gear is selected.

MAIN MENU	SUB-MENU	FUNCTION
	Drive-Away Locking	Enable/Disable automatic locking of the doors when the vehicle speed exceeds 8 km/h (5 mph).
	Easy Entry/Exit	Enable/Disable automatic movement of the steering column and the driver's seat when the ignition is turned off and on.
	2-Stage Unlocking	Enable/Disable the single-point entry door unlocking feature
	Headlamp Delay	Enable/Disable the headlamp delay feature and configure the amount of time the headlamps will remain on.
	Speed Alarm	Enable/disable speed alarm and also adjust the speed warning value.
Trip Computer	Trip A	Enable/Disable display of Trip A readings.
	Trip B	Enable/Disable display of Trip B readings.
	Trip Auto	Enable/Disable display of Trip Auto readings.
	Units	Select the units to be displayed in the message center.
Display Settings	Language	Select the language for the text displayed in the message center.
	Temperature	Select the units for the external temperature reading.
	Instruments	Change the appearance if the instrument cluster display.
Service Menu	VIN Display	Display the Vehicle Identification Number.
	Oil Level Display	Show the oil level display.
	HBA Sensitivity	Change the sensitivity of the Auto High Beam system.

INSTRUMENT CLUSTER COOLING FAN



Due to the location of the instrument cluster, in hot climatic conditions there is a risk of over-temperature affecting performance. A cooling fan is used to maintain the temperature at an acceptable level. The fan is located near the steering column and blows air into ducting which is connected to the rear of the cluster. The ducting also channels air into the rear of the Touch Screen Display (TSD). The temperature is monitored internally within the instrument cluster and the fan is activated by the instrument cluster via a PWM (pulse width modulation) signal.

If instrument cluster temperatures are high, the fan can continue to operate for up to 5 minutes after the ignition is turned off to assist with cooling of the cluster and/or the TSD.

If a failure of the fan occurs, the instrument cluster has internal temperature sensors which will detect overheating and progressively reduce the backlighting of the display to reduce the heat generated within the cluster. In this way the cluster will self-limit the temperature to avoid overheating, at the expense of a loss of brightness at high temperatures.

OPERATION

Control Diagram

NOTE:

A = Hardwired; **D** = High Speed CAN bus; **N** = Medium speed CAN bus; **O** = LIN bus

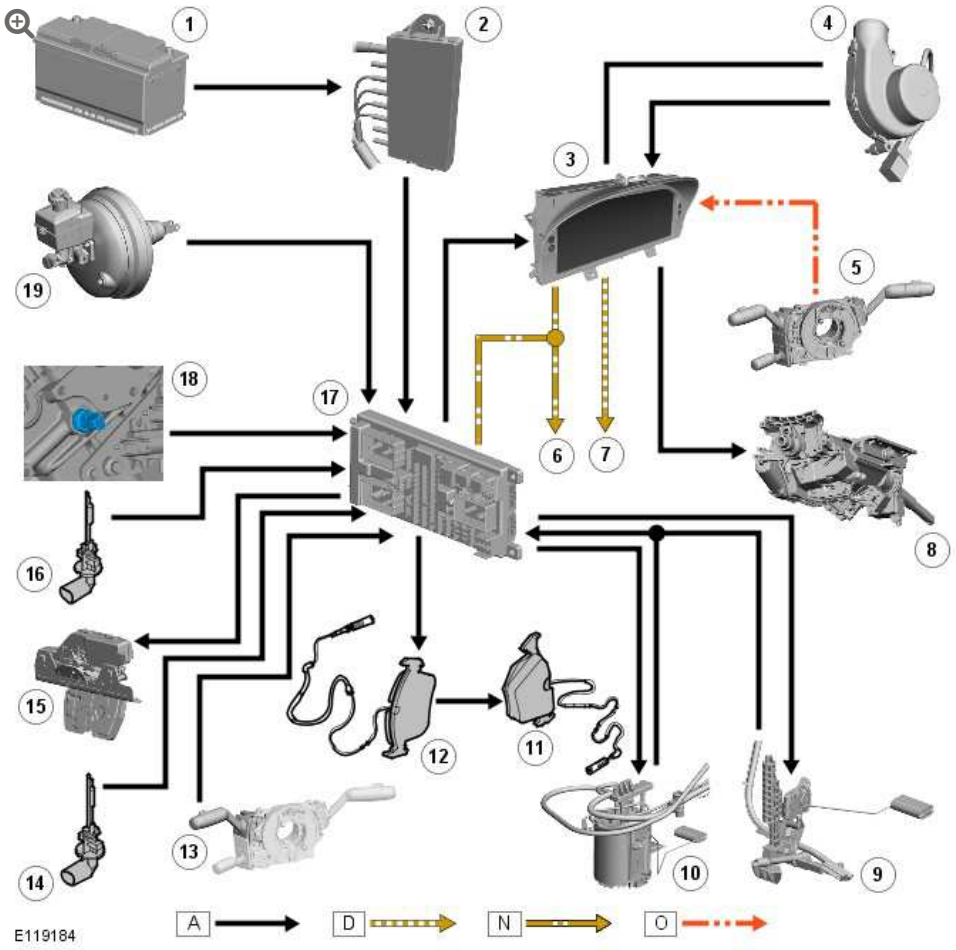

ITEM	DESCRIPTION
1	Battery
2	Battery Junction Box (BJB)
3	Instrument cluster
4	Instrument cluster cooling fan
5	Clockspring
6	Medium speed CAN bus connection to other vehicle systems
7	High speed CAN bus connection to other vehicle systems

ITEM	DESCRIPTION
8	Steering column lock
9	LH fuel level sensor
10	RH fuel level sensor
11	Rear brake pad wear sensor
12	Front brake pad wear sensor
13	LH steering column multifunction switch
14	Washer fluid level sensor
15	Tailgate latch
16	Engine coolant level sensor
17	Central Junction Box (CJB)
18	Oil pressure switch (diesel only)
19	Brake fluid level sensor

Three processors within the instrument cluster manage communications between the vehicle and the cluster display and incorporate the operating software required to drive screen re-configurations.

The instrument cluster receives a permanent fused supply from the passenger compartment fusebox. The same power feed also provides a power supply to the instrument cluster cooling fan.

The cluster is connected to other vehicle systems and control modules via the medium speed CAN (controller area network) bus, high speed CAN bus and LIN (local interconnect network) bus connections.

The majority of information is passed to the instrument cluster from other system control modules on the high speed and medium speed CAN buses and also the LIN bus. However, some vehicle sensors are hardwired directly to the instrument cluster.

The security LED is controlled by a hardwired connection from the CJB (central junction box). A Field Effect Transistor (FET) within the CJB controls the output to the LED.

The steering lock control module is connected to a hardwired connection to the instrument cluster. Security information from other control modules is passed via the network buses and when the conditions are correct the instrument cluster instructs the steering lock control module to unlock te steering column.

The clockspring is connected to the instrument cluster on a LIN bus connection. The LIN bus passes driver selections made on the steering wheel mounted switches to the instrument cluster for processing and transmission to other control modules.

The instrument cluster cooling fan is connected to the cluster with three wires. One wire provides the fan motor ground. The remaining 2 wires provide a monitor feedback to the cluster and a PWM output to control the fan speed.

HORN

HORN SWITCH (G300755)

REMOVAL AND INSTALLATION

86.30.01	SWITCH/PUSH - HORN - RENEW	ALL DERIVATIVES	0.2	USED WITHINS	+

REMOVAL

WARNINGS:

- Persons working on the supplemental restraint system (SRS) must be fully trained and have been issued with the safety guidelines.
- Allow a period of 10 minutes to elapse after disconnecting the battery before undertaking any work on the SRS.
- The SRS electrical connectors are unique. DO NOT force, or attempt to connect electrical connectors to the wrong sockets.
- The correct procedures must always be used when working on SRS components.
- It is imperative that before any work is undertaken on the SRS system, the appropriate information is read thoroughly.
- Always disconnect both battery cables before beginning work on the SRS system. Disconnect the ground cable first. Never reverse connect the battery.
- Take extra care when handling SRS components.

1. Make the air bag supplemental restraint system (SRS) safe.
   For additional information, refer to: Standard Workshop Practices (100-00, Description and Operation).

2. Disconnect the battery ground cable.
   For additional information, refer to: Specifications (414-00, Specifications).

3. Remove the driver air bag module.
   For additional information, refer to: Driver Air Bag Module (501-20, Removal and Installation).

4. **NOTE:**

Left-hand shown, right-hand similar.

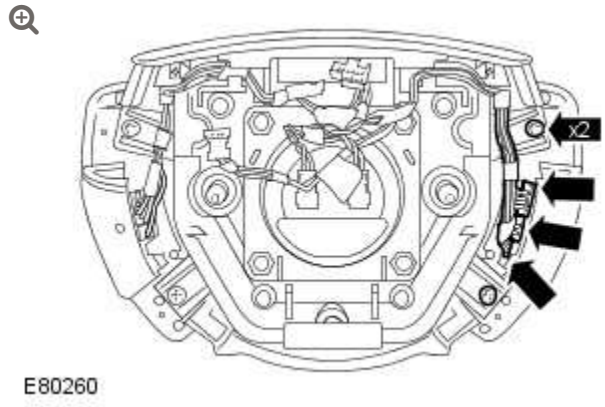

Remove the horn switch.

- Disconnect the 3 electrical connectors.
- Remove the 2 screws.

INSTALLATION

1. Install the horn switch.
   - Connect the 3 electrical connectors.
   - Install the 2 screws and tighten to 3 Nm (2 lb.ft).
2. Install the driver air bag module.
   For additional information, refer to: Driver Air Bag Module (501-20, Removal and Installation).
3. Connect the battery ground cable.
   For additional information, refer to: Specifications (414-00, Specifications).

HORN

HORN (G1226537)

REMOVAL AND INSTALLATION

86.30.10	HORN - EACH - RENEW	ALL DERIVATIVES	0.4	USED WITHINS	+

REMOVAL

NOTE:

Removal steps in this procedure may contain installation details.

1. Disconnect the battery ground cable.
   Refer to: Specifications (414-00, Specifications).

2. **WARNING:**

   Make sure to support the vehicle with axle stands.

   Raise and support the vehicle.

3. Remove the RH front wheel and tire.

4.

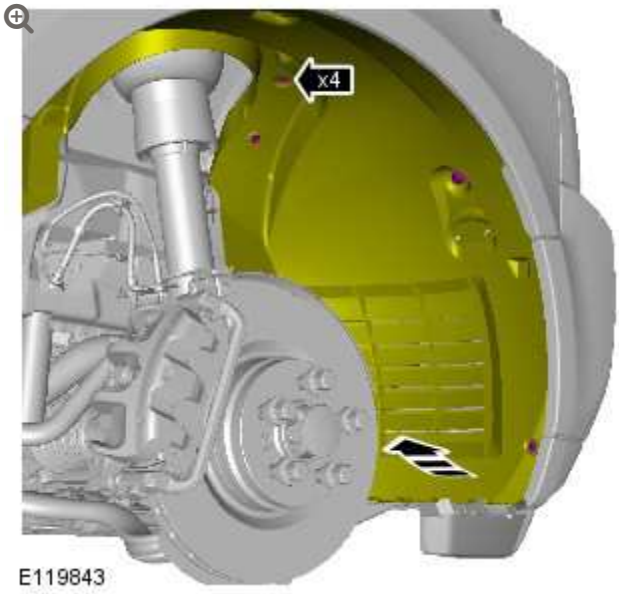

Torque: **1.5 Nm**

5.

NOTE:

Some variation in the illustrations may occur, but the essential information is always correct.

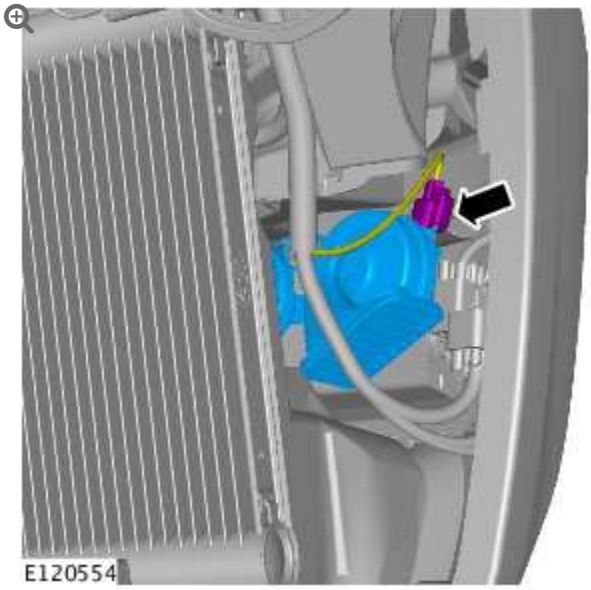

6.

NOTE:

Some variation in the illustrations may occur, but the essential information is always correct.

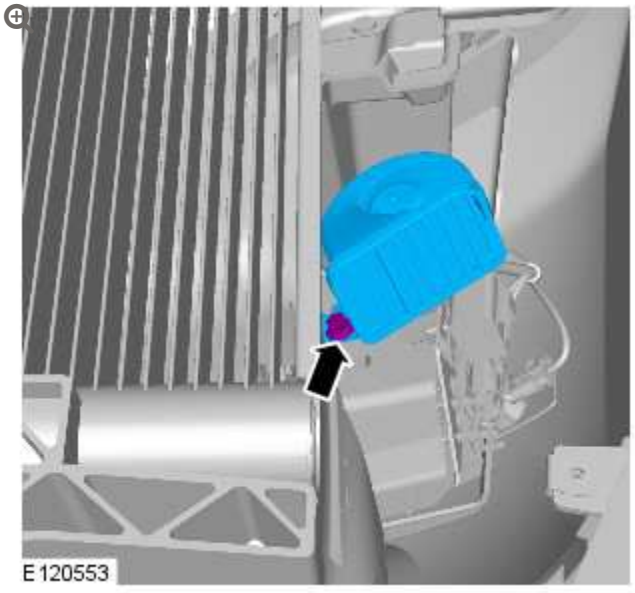

Torque: **20 Nm**

7.

NOTE:

Do not disassemble further if the component is removed for access only.

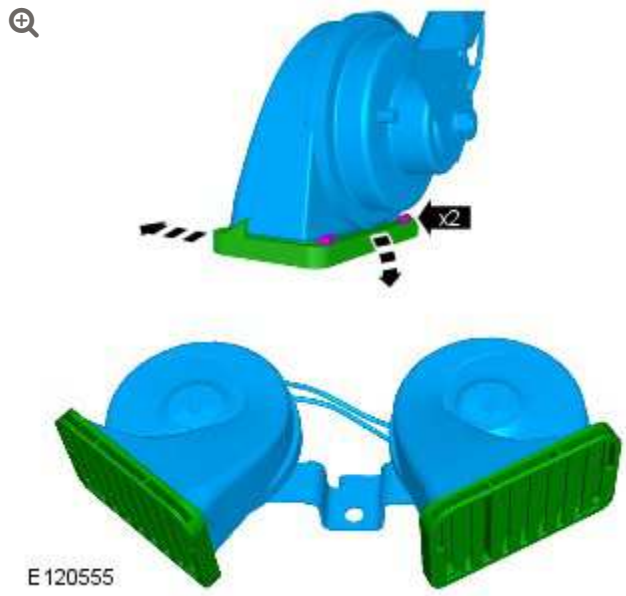

INSTALLATION

1. To install, reverse the removal procedure.

CLOCK

CLOCK (G873436)

REMOVAL AND INSTALLATION

88.15.07	CLOCK - RENEW	ALL DERIVATIVES	0.2	USED WITHINS

REMOVAL

1. Remove the clock.
   For additional information, refer to: Climate Controlled Seat Switch (501-10, Removal and Installation).

INSTALLATION

1. Install the clock.
   For additional information, refer to: Climate Controlled Seat Switch (501-10, Removal and Installation).

2012.0 RANGE ROVER (LM), 413-08

INFORMATION AND MESSAGE CENTER

DESCRIPTION AND OPERATION

INFORMATION AND MESSAGE DISPLAYS

Message Center

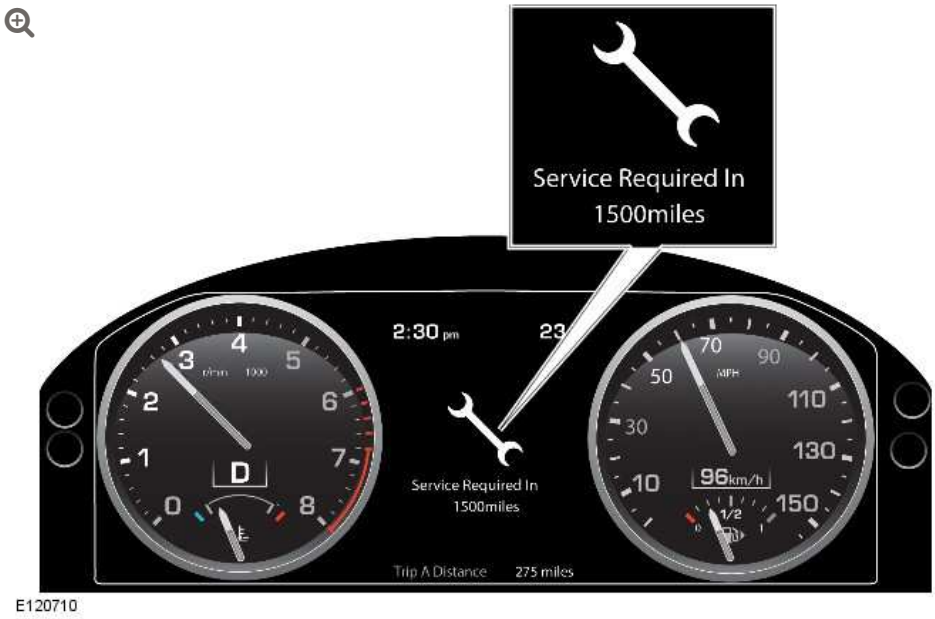

OVERVIEW

The instrument cluster for 2010MY is an all new high definition Thin Film Transistor (TFT) display.

Designed to look similar to a conventional instrument cluster for the main display, the new display can be continually reconfigured to prioritise and refine the information presented to the driver. All displays are 'virtual' gauges with the speedometer and the tachometer being the dominant features of the new display. Messages are displayed in a central position of the cluster.

The instrument cluster displays the following information to the driver:

- Odometer - Displays the total vehicle distance travelled
- Trip meter - There are 3 trip meters available; A, B and Auto. These display the total vehicle distance travelled since the last reset
- Ambient temperature - Displays the external ambient temperature in °C or °F
- Message center - Displays system information to the driver.

ODOMETER AND TRIP METER

The odometer is located in a central position at the bottom of the TFT screen. In addition to displaying the total distance the vehicle has travelled and also the date, this area of the display can also show the following information:

- Trip distance
- Trip average speed
- Trip average fuel consumption
- Instantaneous fuel consumption
- Range available on remaining fuel.

The above selections can be made by pressing the trip button on the end of the LH (left-hand) steering column multifunction switch repeatedly until the option required is reached.

There are 3 trip recordings available to view; A, B and automatic. The instrument cluster menu is used to select which trip recording is displayed.

The automatic trip is always available and is reset each time the engine is started and the vehicle moves. Previous trips can be added to form a continuous trip recording by pressing and holding the trip button when the automatic trip information is displayed. The message center will confirm that the previous journey information has been added and pressing and holding the trip button for 1 second will add the data. The previous trip information can also be deleted by pressing and holding the trip button when the automatic trip information is displayed. The message center will confirm deletion of the previous journey data and pressing and holding the trip button for 1 second will delete the previous trip information.

Trip A and B can be reset by the driver at any time. When the required trip information is displayed, pressing and holding the trip button for 2 seconds will erase the previous trip information stored. Resetting trip A or B will not affect the other trip information, for example, if trip A is reset, trip B will retain its information until it is reset.

AMBIENT TEMPERATURE

The ambient temperature is displayed in a central position at the top of the TFT screen. The temperature can be displayed in degrees F or C and this is selectable by the driver using the instrument cluster menu.

If the external temperature falls to 4°C (39°F) or below, the external temperature display by an orange snowflake symbol.

MESSAGE CENTER

The message center is located in a central position in the instrument cluster. Other displayed information may be temporarily removed to allow for the message to be displayed.

The majority of messages are generated by the cluster which monitors system status via the bus systems and displays system information messages as requested by the controlling module. Other system control modules are also capable of generating messages to display system status. Some messages are accompanied by a chime, which is requested by the control module generating the message and generated by the instrument cluster via the sounder, which is located on the top of the cluster.

The driver can view system status messages which are current in the instrument cluster RAM. Pressing and releasing the menu control displays current messages in priority order.

The messages are assigned priorities, depending on the effect on driving safety and driving ability of the vehicle. New messages are displayed and accompanied by a chime from the sounder. Messages are divided into priority groups P1, P2 and P3. The priority groups are as follows:

- **Priority Group P1** - This group includes messages which have a direct affect on the driving ability and safety of the vehicle, 'Gearbox Overheating' for example. This message requires an urgent and immediate reaction from the driver in response to the message. P1 messages are also accompanied by appropriate flashing warning indicator symbols adjacent to the message center.

If more than one P1 message is present, each message is displayed in turn at 3 second intervals.

- **Priority Group P2** - This group includes messages which do not directly affect driving ability or safety of the vehicle. This message must be noted by the driver and the cause rectified as soon as possible. Each message is indicated once for a maximum of 23 seconds. They can be recalled by pressing and releasing the menu control.
- **Priority Group P3** - This group displays messages which relate to fluid levels, 'LOW SCREEN WASH' for example. Depending on the message, some messages are only displayed at the end of a journey, to avoid irritation to the driver.

Two other groups are defined as 'End of Journey Messages' and 'Special Messages S and S1', as follows:

- **End of Journey Messages** - Messages categorized as 'P1' and 'P2' error messages, are displayed again at the end of the journey. Error messages do not include messages such as 'Doors Open'. Messages in the 'P3' group are displayed after the 'P1' and 'P2' messages. New messages, which only occur at the end of a journey, 'Lights On' for example, are displayed according to their priority.
- **Special Messages S and S1** - These messages have the highest priority and cannot be overridden by messages in groups 'P1', 'P2' and 'P3'. They immediately overwrite any currently displayed messages. If more than one special message is present, the message with the highest priority is displayed, after the current displayed message has been shown for at least 1 second. S and S1 messages are not displayed between any symbols.

Some messages, especially S, S1 and P messages are accompanied by a chime from the sounder to alert the driver to their presence. At

the end of a journey, a single chime precedes all end of journey messages.

The messages are displayed in a language applicable to the vehicle market configuration and can be changed using the instrument cluster menu. The following list shows the possible messages which can be displayed.

NOTE:

If the instruction given in the 'Action' column does not resolve the message display, use the Workshop Manual Diagnosis and Testing section for the applicable vehicle system to determine the fault and perform any additional action required.

MESSAGE	REASON	ACTION
Press [OK] to clear: Vehicle VIN: SALLNABA81A577879	Vehicle VIN display	None
Fuel Level Low	Fuel level in fuel tank has fallen below warning threshold	Replenish fuel tank.
Fuel Pump System Fault	ECM (engine control module) has detected a fault with the fuel system.	Diagnose fault using a Land Rover approved diagnostic system.
Washer Fluid Low	Washer fluid level is low and low level sensor has operated.	Replenish washer fluid.
Doors Open	One or more doors are open.	Close open doors.
Right Front Door Open	Right front door open.	Close right front door.
Tailgate Open	Tailgate open.	Close tailgate.
BONNET OPEN	Hood open.	Close hood

MESSAGE	REASON	ACTION
Left Front Door Open	Left front door open.	Close left front door.
Right Rear Door Open	Right rear door open.	Close right rear door.
Left Rear Door Open	Left rear door open.	Close left rear door.
Column Adjust	Column adjust switch has been operated.	None
Column Adjust Auto	Auto column adjust is operating.	None.
Pedal Adjust	Pedal adjust is operating.	None.
Memory 1 Settings Recalled	Memory 1 button has been pressed or smart key with memory 1 setting detected.	None
Memory 2 Settings Recalled	Memory 2 button has been pressed or smart key with memory 1 setting detected.	None
Memory 3 Settings Recalled	Memory 3 button has been pressed or smart key with memory 1 setting detected.	None
Memory 1 Settings Saved	Memory 1 settings have been saved.	None
Memory 2 Settings Saved	Memory 2 settings have been saved.	None
Memory 3 Settings Saved	Memory 3 settings have been saved.	None
Valet Mode	Valet mode has been requested by the driver.	none
Transport Mode	The vehicle systems are in transport mode.	Remove vehicle from transport mode using a

MESSAGE	REASON	ACTION
		Land Rover approved diagnostic system.
Alarm Sensors	Alerts the driver that the interior space monitoring has been re-enabled when the vehicle was unlocked with the smart key.	None
Smart Key recognised Press brake when starting	Smart key found by the keyless vehicle module when using the keyless start backup.	None
Smart Key Not Found Refer to Handbook	Keyless vehicle module has not recognised the smart key. Use the keyless start backup procedure to start the vehicle.	Identify reason smart key is not recognised using an approved Land Rover diagnostic system.
Press brake when starting	The start/stop button was pressed without the brake pedal depressed.	Depress the brake pedal before pressing the start/stop button.
Smart Key Battery Low	Keyless vehicle module has detected low battery power in the smart key.	Replace the smart key battery.
Gear Selector Not In Park	Gear selector is not in the PARK position.	Move gear selector to the PARK position.
Stop Switch Failure	Start/stop switch is not operating correctly.	Investigate cause of start/stop switch malfunction.
Steering Column Locked	Steering column is locked.	None
Ignition Is On	Start/stop switch has been pressed to activate ignition mode 6 (ignition on).	None
Engine Stop Button Pressed		None

MESSAGE	REASON	ACTION
	Engine start/stop button has been pressed.	
Headlamps Are Off	Headlamps have been switched off either manually or by the auto headlamps feature.	None
Lights On	Headlamps have been switched on either manually or by the auto headlamps system.	None
Autolamp Delay Off	Auto headlamp delay has be switched off by the driver.	None
Autolamp Delay 00:30	Auto headlamp delay timer has been changed to 30 seconds.	None
Autolamp Delay 01:00	Auto headlamp delay timer has been changed to 1 minute.	None
Autolamp Delay 02:00	Auto headlamp delay timer has been changed to 2 minutes.	None
Autolamp Delay	Auto headlamp delay is active.	None
Interior Lights Auto	The automatic interior lamps have been activated from the off mode.	None
Interior Lights Off	The automatic interior lamps have been switched off from the automatic mode.	None
Cruise Cancelled		None

MESSAGE	REASON	ACTION
	Cruise control has been cancelled by the driver.	
Cruise Override	The driver has operated the accelerator to increase the vehicle speed above the cruise set speed.	None
Gap	Forward alert system gap setting.	If required the gap setting can be adjusted using the steering wheel mounted switches.
Driver Intervene	Immediate action required by the driver to apply the brakes.	Apply brakes if required. May also be displayed if speed control system loses CAN (controller area network) messages when active.
Cruise Not Available	ECM has detected a fault with the engine management system or vehicle speed is outside threshold for cruise control operation.	Bring vehicle into speed control operating speed or diagnose fault using an approved Land Rover diagnostic system.
Radar Sensor Blocked	The adaptive speed control radar sensor has become dirty or obstructed.	Remove the obstruction or clean the radar sensor.
Driver Intervene Cruise Cancelled	The driver has applied the vehicle brakes and the speed control has been suspended.	Use the 'Resume' steering wheel switch to engage the speed control system.
Forward Alert Off	Forward alert has been switched off. No warning will be given for objects in the vehicle's forward direction.	None
Forward Alert	Forward alert has been switched on or	None

MESSAGE	REASON	ACTION
	the gap settings have changed.	
Press [OK] To Set Warning Speed XX MPH (XX km/h)	Displayed when setting the ASL set speed.	None
Speed Alert	Displayed when the set speed is exceeded.	Reduce vehicle speed to below the current set speed.
Vehicle Held Press Accelerator To Resume	Forward alert is maintaining vehicle speed and distance.	None
Resume Inhibited	Forward alert is preventing further acceleration.	None
Forward Alert Not Available	ECM has detected a fault with forward alert.	Diagnose the fault using an approved Land Rover Diagnostic system.
Forward Alert Radar Blocked	The forward alert radar has become dirty or obstructed.	Remove the obstruction or clean the radar sensor.
DSC On	Displayed for a short time when the DSC switch is operated to activate the DSC system.	None
DSC Off	Displayed for a short time when the DSC switch is operated to de-activate the DSC system.	None
TracDSC	Displayed for a short time when the DSC switch is operated to activate the TRAC DSC system.	None
Stability Control Not Available Drive With Care	The ABS (anti-lock brake system) module has detected a fault in the DSC system.	A fault has occurred in the DSC system. Interrogate ABS module for faults and diagnose using an approved Land Rover diagnostic system.

MESSAGE	REASON	ACTION
HDC ON	Displayed when the HDC switch is operated to activate the HDC system.	None
HDC OFF	Displayed when the HDC switch is operated to de-activate the HDC system.	None
HDC - Select Gear	Select D or R on transmission selector.	None
HDC Not Available System Fault	The ABS module has detected a fault in the HDC system.	A fault has occurred in the HDC system. Interrogate the ABS module for faults and diagnose using an approved Land Rover diagnostic system.
HDC Temporarily Unavailable	ABS module has determined brake usage has caused brake overheat.	Allow brakes to cool down. ABS module will remove message after predetermined time period of reduced brake usage.
HDC Not Available Speed Too High	Vehicle speed of more than 30 mph (50 km/h) is too high for HDC operation.	Reduce vehicle speed to less than 30 mph (50 km/h). HDC will resume operation below this speed.
Brake Fluid Low	Brake fluid level is low and low level sensor has operated.	Check braking system for leakage and replenish brake fluid to correct level.
ABS Fault	The ABS module has detected a fault.	A fault has occurred in the ABS system. Interrogate the ABS module for faults and diagnose using an approved Land Rover diagnostic system.
EBD Fault	A fault is present in the braking system preventing EBD operation. Braking system will operate but EBD will not be available.	A fault has occurred in the EBD system. Interrogate the ABS module for faults and diagnose fault using an approved Land Rover diagnostic system.

MESSAGE	REASON	ACTION
Emergency Brake Assist Not Available	A fault is present in the braking system preventing EBA operation. Braking system will operate but EBA will not be available and additional brake pedal pressure may be required.	A fault has occurred in the EBA system. Interrogate the ADM for faults and diagnose fault using an approved Land Rover diagnostic system.
Adaptive Dynamics Fault	A fault has been detected by the Adaptive Damping Module (ADM).	Interrogate the ADM for faults and diagnose fault using an approved Land Rover diagnostic system.
E DIFF Not Available	Differential temperature has reached the overheat threshold. System deactivated until temperature returns within limits.	Allow differential to cool.
E DIFF Fault	Fault has occurred with electronic differential. System deactivated until fault rectified.	Interrogate the differential control module for faults and diagnose fault using an approved Land Rover diagnostic system.
Caution! Park Brake Applied	Parking brake has been applied when the vehicle moving at a speed 3 mph (5 km/h) or above.	None
Park Brake Fault	A fault is present in the parking brake system.	Interrogate the parking brake module for faults and diagnose using an approved Land Rover diagnostic system.
Press Foot Brake And Park Brake Switch To Release	Driver is trying to release the park brake without applying the foot brake.	Apply foot brake and parking brake to reset the parking brake module.
Park Brake Auto Release Unavailable	A fault is present in the parking brake	Interrogate the parking brake module for faults and

MESSAGE	REASON	ACTION
	system or an input from another vehicle system is missing.	diagnose using an approved Land Rover diagnostic system.
Park Brake Off Lift Switch To Apply	Parking brake manual release has been operated.	Lift parking brake switch to activate the parking brake and reset the manual release system.
Check Spare Tyre Pressure	Spare tire pressure is low	Inflate the spare tire to the highest pressure for the specified tire size.
Tyre Pressures Too Low For Speed. NOTE: Certain markets only	Tire pressure(s) too low for high speed driving.	Inflate the tires to the recommended pressure for high speed driving.
Tyre Pressure Monitoring System Fault	There is a fault with the Tire Pressure Monitoring system.	Check for visual faults/DTC (diagnostic trouble code)'s and diagnose using an approved Land Rover diagnostic system.
Check All Tyre Pressures	Pressure is low in one or more tires.	Check all tire pressures and inflate to the recommended pressures.
Front Right Tyre Pressure Not Monitored	Front Right tire low pressure sensor reception lost or missing.	Check for visual faults/DTC's and diagnose using an approved Land Rover diagnostic system.
Rear Right Tyre Pressure Not Monitored	Rear Right tire low pressure sensor reception lost or missing.	Check for visual faults/DTC's and diagnose using an approved Land Rover diagnostic system.
Front Left Tyre Pressure Not Monitored	Front Left tire low pressure sensor reception lost or missing.	Check for visual faults/DTC's and diagnose using an approved Land Rover diagnostic system.
Rear Left Tyre Pressure Not Monitored	Rear Left tire low pressure sensor reception lost or missing.	Check for visual faults/DTC's and diagnose using an approved Land Rover diagnostic system.
Rear Right Low Check All Tyre Pressures	Rear Right tire pressure is low	Inflate the Rear Right tire to the recommended pressure.

MESSAGE	REASON	ACTION
Front Left Low Check All Tyre Pressures	Front Left tire pressure is low.	Inflate the Front Left tire to the recommended pressure.
Front Right Low Check All Tyre Pressures	Front Right tire pressure is low.	Inflate the Front Right tire to the recommended pressure.
Rear Left Low Check All Tyre Pressures	Rear Left tire pressure is low.	Inflate the Rear Left tire to the recommended pressure.
Tyre Pressure Monitoring Not Available. NOTE: Certain markets only	Tire low pressure sensor reception missing.	Check for visual faults/DTC's and diagnose using an approved Land Rover diagnostic system.
Tyre Pressure Monitoring Available. NOTE: Certain markets only	Tire low pressure sensor reception restored.	None
Tyre Pressure Monitoring Set For Light Load. NOTE: Certain markets only	Currently active load setting information.	None
Tyre Pressure Monitoring Set For Heavy Load. NOTE: Certain markets only	Currently active load setting information.	None
Water In Fuel See Handbook. NOTE: Diesel only	ECM has detected a signal from the water in fuel sensor on the fuel filter.	Drain the fuel filter as detailed in the Repair Procedures.
Charging System Fault	ECM has detected a fault in the charging system.	Interrogate the ECM using an approved Land Rover diagnostic system.
Low Battery Please Start Engine	Battery monitoring system has detected a low battery condition.	Start engine to prevent further discharge of vehicle battery. Check battery condition and charging system using an approved Land Rover diagnostic system.
Auto High Beam Sensor Blocked	The Auto High Beam control module has	Clean the image sensor and area of the windscreen

MESSAGE	REASON	ACTION
	detected a restriction in the light levels detected by the image sensor.	in front of the sensor. Ensure no decals are placed in the windscreen to block the image sensor and no reflective items are on the instrument panel. Interrogate the control module using an approved Land Rover diagnostic system.
DPF Full See Handbook	ECM has detected diesel particulate filter is becoming blocked or has become blocked.	Drive the vehicle as described in the workshop manual to clean the filter.
DPF Full Visit Dealer	The DPF software in the ECM has detected the DPF is still blocked after the driver has performed the regeneration drive cycle.	Dealer should use an approved Land Rover diagnostic system and perform a diagnostic routine to regenerate the DPF.
Coolant Level Low	ECM has detected a low coolant signal from the engine coolant level sensor.	Check the coolant system for leaks and replenish the coolant reservoir as necessary.
Blind Spot System Not Available	Blind spot monitoring system has a fault or vehicle speed is below threshold for system operation. The amber alert LED (light emitting diode) is illuminated in the door mirrors.	Drive vehicle above threshold speed or investigate cause of fault.
Blind Spot Sensor Blocked	A blind spot monitoring sensor has become dirty or obstructed. The amber alert LED is illuminated in the door mirrors.	Remove obstruction or clean the radar sensor.
Brake Pads Worn	A front or rear brake pad wear sensor	Replace front and/or rear brake pads as necessary.

MESSAGE	REASON	ACTION
	contact has sent a pad wear signal to the instrument cluster.	
Service Required In XXXX miles (km)	ECM has detected service warning threshold of 1950 miles (3200 km) has been reached. ECM passes this information to the instrument cluster which rounds the mileage figure down to the nearest 50 miles (km).	Service vehicle as necessary and reset service interval using an approved Land Rover diagnostic system.
Service Required	ECM service warning countdown has reached 0 miles (km) and service is now due.	Service vehicle as necessary and reset service interval using an approved Land Rover diagnostic system.
Command Shift	CommandShift and has been selected by the driver using the transmission selector.	None
Low Range Selected	Low range has been selected by the driver using the range change button on the floor console.	None
High Range Selected	High range has been selected by the driver using the range change button on the floor console.	None
Select Neutral For Range Change	The driver has attempted to make a range change with the transmission selector in a position other than neutral (N).	Move transmission selector to neutral (N) position.

MESSAGE	REASON	ACTION
Speed Too High For Range Change	The driver has attempted to make a range change with the vehicle speed above the range change threshold.	Slow vehicle to within range change threshold speed.
Gearbox Overheating	TCM (transmission control module) has detected a transmission overheat.	Slow vehicle or stop to allow transmission to cool.
Reverse Gear Selected	TCM has detected driver has selected reverse gear using the transmission selector.	None
Camera System Fault	The proximity camera control module has developed a fault.	Diagnose the module using an approved Land Rover diagnostic system.
Suspension Lowered For Safety	Fault has occurred in the air suspension system or failure of another vehicle system has caused suspension system to lower to access height.	Investigate fault, check air suspension system for leakage and diagnose other systems using an approved Land Rover diagnostic system.
Slow Down Or Vehicle Will Raise	Vehicle speed is between 19 to 25 mph (30 to 40 km/h). Vehicle will automatically raise to on-road height from crawl if speed increases to 25 mph (40 km/h).	Keep vehicle speed below 25 mph (40 km/h).
Slow Down Or Vehicle Will Lower	Vehicle speed is between 25 to 31 mph (40 to 50 km/h). Vehicle will automatically lower to on-road height if speed increases 31 mph (50 km/h).	Keep vehicle speed below 31 mph (50 km/h).

MESSAGE	REASON	ACTION
Suspension Will Raise When System Cooled	Air suspension air supply unit compressor or motor is cooling down.	Lifting will resume when air supply unit compressor or motor has cooled beyond pre-set threshold.
Speed Too High To Change Height	Vehicle speed is too high for selected height change.	Reduce vehicle speed to within threshold for required height.
Vehicle Raising In Progress	Vehicle is taking longer than normal to raise.	Wait for suspension raising to be completed if ground clearance is important.
Suspension In Extended Mode	Vehicle body has become grounded on an obstacle. The suspension will be lifted automatically if appropriate.	None
For Additional Suspension Press Raise Switch And Brake Pedal For 3 Seconds	The air suspension is in Extended Mode and additional suspension lifting is available if required by the driver.	Follow instructions if additional suspension lifting is required.
Re-Select Suspension Height If Clear Of Obstacle	Reminder message that vehicle is still in extended mode.	If extended mode is no longer required, press air suspension control 'lower' switch to return to normal levelling control.
Suspension Locked At Access Height	Air suspension control switch 'Hold' button has been pressed when vehicle was in access height	Vehicle enters crawl mode until 'raise' switch pressed for more than 1 second or vehicle speed exceeds pre-determined threshold.
Access Height Selected	Driver has pressed the lower switch or the door module access switch.	Vehicle will lower to access height if all operating parameters are met.
Normal Height Selected	Normal height has been selected by the driver or by exceeding automatic	Suspension ride height will change to normal.

MESSAGE	REASON	ACTION
	height change speed thresholds.	
Off Road Height Selected	Driver has selected off-road height.	Suspension ride height will change to off-road.
Close Doors To Change Height	Height request has been made but is prevented due to a door being open.	Close door(s).
Confirm Required Suspension Height	The doors have been opened for more than 90 seconds while the suspension was changing ride height or the engine was turned off during suspension raising.	Re-select the required ride height using the air suspension control switches or drive the car to achieve an automatic height selection.
Start Engine To Raise Vehicle	Vehicle cannot be raised with engine off.	Start engine to complete raise request.
Suspension Fault	Air suspension control module has detected a system fault.	Investigate the fault and diagnose using an approved Land Rover diagnostic system.
Only Normal Height Available	Air suspension control has detected fault in the system. Only on-road height is available.	Investigate the fault and diagnose using an approved Land Rover diagnostic system.
Suspension Fault Max Speed 30 MPH (50 km/h)	Air suspension control module has detected a fault in the system and is unable to control the height correctly.	Investigate the fault and diagnose using an approved Land Rover diagnostic system.
Vehicle Too Low	Applies only when the vehicle is in Transportation Mode. This message is displayed while the suspension is being lifted from the	Wait for the "Engine On" height to be achieved before moving the vehicle on or off transportation equipment.

MESSAGE	REASON	ACTION
	"Engine Off" to the "Engine On" height.	
Air Suspension Not In Customer Mode	Air suspension system is not configured for customer use.	Use an approved Land Rover diagnostic system to configure the air suspension system correctly.
Special Programs Off	Advisory message to inform driver that current special program has been switched off and general program is active.	None
Grass Gravel Snow	Terrain Response rotary control has been moved to the Grass Gravel Snow position. Program will be selected after 2 seconds.	None
Mud-Ruts	Terrain Response rotary control has been moved to the Mud/Ruts position. Program will be selected after 2 seconds.	None
Sand	Terrain Response rotary control has been moved to the Sand position. Program will be selected after 2 seconds.	None
Rock Crawl	Terrain Response rotary control has been moved to the Rock Crawl position. Program will be selected after 2 seconds	None
Dynamic	Terrain Response rotary control has	None

MESSAGE	REASON	ACTION
	been moved to the Dynamic position. Program will be selected after 2 seconds.	
Program change in progress	Vehicle operating conditions prevent selection of program. This may be caused by ABS or DSC activity or electronically controlled differential.	If operating conditions change within 60 seconds, selected program will be activated..
Recommend starting in 2nd Gear for slippery conditions	May be advisable to pull away in gear other than 1st on slippery surfaces. Message will be displayed only once per ignition cycle.	Applies on automatic transmission vehicles when in Grass/Gravel/Snow program but low gear has been selected manually using CommandShift.
Recommend start in 3rd Gear for slippery conditions	May be advisable to pull away in gear other than 1st or 2nd when in low range on slippery surfaces. Message will be displayed only once per ignition cycle.	Applies on automatic transmission vehicles when in Grass/Gravel/Snow program but low gear has been selected manually using CommandShift.
Recommend Raising suspension to Off-Road height in **deep** mud ruts	Terrain Response mud/ruts special program message when in high range, displayed once every ignition cycle (Suspension raised automatically when in low range).	Raise suspension manually to off-road height if required.
Recommend Low Range is selected for Mud-Ruts Program	Terrain Response special program message displayed once every ignition cycle.	Select low range if required
	Terrain Response system would	If trailer or light board is connected, manually raise

MESSAGE	REASON	ACTION
Trailer Connected Off Road height not selected automatically	normally have provided off-road height automatically, but system has detected an electrical load on trailer socket.	suspension to off-road height if safe to do so If nothing is connected to trailer socket, investigate trailer socket and/or Terrain Response system for fault.
CAUTION! Risk of grounding with suspension at Normal Height	Only displayed when system would have normally provided off-road height, but driver has manually lowered the suspension (or the suspension system is unable to raise the vehicle).	Raise suspension manually to off-road height if possible and where appropriate.
Select Low Range to activate Rock Crawl	Terrain Response Rock Crawl special program has been requested but transfer box is in high range.	Change transfer box to low range.
Terrain Response Special Programs unavailable	Terrain Response special program is selected but cannot be activated because of a sub-system fault (e.g. engine, transmission).	A fault exists in another sub-system used in the Terrain Response system. Use an approved Land Rover diagnostic system to interrogate other sub-system control modules for DTC's.
Terrain Response System Fault	Terrain Response special program is selected but cannot be activated because of a fault in the system itself.	A fault exists in the Terrain Response control module. Check other sub-system modules used in the Terrain Response system and then diagnose the Terrain Response control module using an approved Land Rover diagnostic system.
Grass Gravel Snow Program Selected	Driver has moved Terrain Response rotary control to Grass Gravel Snow program.	None

MESSAGE	REASON	ACTION
Mud-Ruts Program Selected	Driver has moved Terrain Response rotary control to Mud-Ruts program.	None
Sand Program Selected	Driver has moved Terrain Response rotary control to sand program.	None
Rock Crawl Program Selected	Driver has moved Terrain Response rotary control to rock crawl program.	None
Special Programs Off	Advisory message to inform driver that system is in special programs off.	None
Cruise Setspeed XXX mph (XXX km/h)	Displays the speed control set speed selected by the driver.	None
Cruise Standby	The speed control 'Cancel' button has been pressed.	Press the 'Resume' button to resume the set speed.
Cruise Engaged	The cruise control has engaged and holding the vehicle at the selected set speed.	None
Cruise Cancelled	Driver has pressed cancel switch.	Press the resume switch to resume speed control.
Cruise Override XXX MPH (XXX km/h)	Driver has operated throttle to increase vehicle speed when using adaptive speed control.	Release accelerator pedal to re-engage adaptive speed control.
Speed Alarm	The set speed warning speed value has been exceeded.	Slow the vehicle to the set speed or access the instrument cluster menu to adjust the set speed for the speed alarm to the required value.

MESSAGE	REASON	ACTION
Press & Hold to reset Trip A	Press and hold the trip button to reset Trip A.	To reset the Trip A.
Press & Hold to reset Trip B	Press and hold the trip button to reset Trip B.	To reset the Trip B.
Press & Hold to Add or Remove last journey	Press and hold the trip button to add or remove the last journey to the displayed trip recorder.	None
Press [OK] To Clear Engine Oil Level OK	Engine oil level is at the correct level.	None
Press [OK] To Clear Overfilled Refer to handbook	Engine oil level is too high and has been overfilled. Do not drive the vehicle as this will cause serious engine damage.	Remove some oil from the engine and recheck the oil level. Top-up or remove further oil as necessary.
Press [OK] To clear Engine Oil Level Not Available	A fault exists in the engine oil level system.	Use an approved Land Rover diagnostic system to diagnose the fault.
Press [OK] To Clear Engine Oil Level Add XX Litre (Quart) Refer to handbook for oil type	Engine oil level requires replenishing to the correct level.	Add the suggested amount of engine oil, recheck level is correct.
Press [OK] To Clear Engine Oil Level Underfilled Refer to handbook for oil volume & type	Engine oil level is low.	Add engine oil and recheck that oil level is at the correct level.

GEAR POSITION DISPLAY

The gear position is displayed in the lower half of the tachometer display. It shows the current selector position P, R, N, D or S. When

the transmission is in manual 'CommandShift' mode, the display will show the currently selected gear ratio S1, S2, S3, S4, S5 or S6.

The gear position display is controlled by the TCM. The gear position is illuminated in response to CAN bus messages from the TCM.

The instrument cluster has no control over the gear position display, but monitors the controlling CAN bus messages. If the instrument cluster detects ten incorrect CAN bus messages, 'TRANS. FAILSAFE PROG' is illuminated in the message center. If a correct CAN bus message is received when the ignition is next switched on to ignition mode 6, the error is erased and the message removed.

SERVICE INTERVAL INDICATOR

The Service Interval Indicator is displayed in the message center. The indicator displays information calculated by the ECM to calculate the remaining distance to the next service based on the amount of fuel used since the last service interval indicator reset.

The ECM counts down the distance to engine service and the instrument cluster rounds this down to the nearest 50 miles (KM). The fuel used based count down starts from 3200 miles (km) displaying the required figure in the trip computer message center, for example 'Service Required in 1950 miles (km)'. When the ECM has calculated the distance to service is 0 miles (km), the ECM will request the instrument cluster to display 'Service Required' in the message center.

The ECM also monitors and calculates when the time to the next oil service is required and when an oil service is required, 'Service Required' is displayed in the message center. This message takes priority over the distance to service calculation.

The service information is displayed in the message center for 4 seconds at each ignition cycle. There is no minus figure if the service

distance is exceeded, 'Service Required' is displayed until the ECM service counter is reset using an approved Land Rover diagnostic system via a CAN bus message from the instrument cluster.

WARNING DEVICES

DIAGNOSIS AND TESTING

PRINCIPLES OF OPERATION

For a detailed description of the Blindspot Monitoring system, refer to the relevant Description and Operation sections in the workshop manual.

INSPECTION AND VERIFICATION

CAUTION:

Diagnosis by substitution from a donor vehicle is **NOT** acceptable. Substitution of control modules does not guarantee confirmation of a fault, and may also cause additional faults in the vehicle being tested and/or the donor vehicle.

1. Verify the customer concern.
2. Visually inspect for obvious signs of damage and system integrity.

NOTE:

Particular attention should be paid to the following items where DTCs may not be logged:

- Check for contamination (e.g. dirt, grime, frosting, ice) around the blindspot monitoring sensors and clear.

Visual Inspection

MECHANICAL	ELECTRICAL
▪ Exterior rear view mirror glass ▪ Mud or sleet contamination around rear bumper area ▪ Blindspot Monitoring Modules	▪ Fuse(s) ▪ Relay(s) ▪ Wiring Harness ▪ Electrical connector(s) ▪ Blindspot Monitoring Modules

3. If an obvious cause for an observed or reported concern is found, correct the cause (if possible) before proceeding to the next step.

4. If the cause is not visually evident, verify the symptom and refer to the Symptom Chart, alternatively, check for Diagnostic Trouble Codes (DTCs) and refer to the DTC Index.

SYMPTOM CHART

SYMPTOM	POSSIBLE CAUSES	ACTION
▪ The instrument cluster displays 'BSM System Fault'	▪ Left driver display alert LED circuit -	Refer to the electrical circuit diagrams and check left driver display alert LED circuit for short to power

SYMPTOM	POSSIBLE CAUSES	ACTION
▪ DTC B11C915 is logged within the left hand Blind Spot Monitoring module ▪ The Left Alert icon is constantly illuminated	short to power	
▪ The instrument cluster displays 'BSM System Fault' ▪ DTC B11C915 is logged within the left hand Blind Spot Monitoring module ▪ No short to power or open circuit fault on the driver display status LED circuit	▪ Left mirror ground circuit - open circuit	Refer to the electrical circuit diagrams and check the left mirror ground circuit for open circuit
▪ The instrument cluster displays 'BSM System Fault' ▪ DTC B11C915 is logged within the right hand Blind Spot Monitoring module ▪ No short to power or open circuit fault on the driver display status LED circuit	▪ Right mirror ground circuit - open circuit	Refer to the electrical circuit diagrams and check the right mirror ground circuit for open circuit

SYMPTOM	POSSIBLE CAUSES	ACTION
▪ The instrument cluster displays 'BSM System Fault' ▪ DTC U023200 is logged within the right hand Blind Spot Monitoring module ▪ The left driver display status LED does not illuminate when the vehicle is stationary, in Park and the ignition is on	▪ Left driver display status LED circuit - short to ground ▪ Suspect left hand module failure	Refer to the electrical circuit diagrams and check left driver display status LED circuit for short to ground. Clear DTC and re-test. If DTC remains suspect the left hand Blindspot Monitoring module. Check and install a new left hand Blindspot Monitoring module only, refer to the new module/component installation note at the top of the DTC Index
▪ The instrument cluster displays 'BSM System Fault' ▪ DTC U023200 is logged within the right hand Blind Spot Monitoring module ▪ When the system is powered up the left driver display alert LED does not illuminate during the bulb self-checks	▪ Left driver display alert LED - short to ground, open circuit ▪ Suspect left hand module failure	Refer to the electrical circuit diagrams and check left driver display alert LED circuit for short to ground, open circuit. Clear DTC and re-test. If DTC remains suspect the left hand Blindspot Monitoring module. Check and install a new left hand Blindspot Monitoring module only, refer to the new module/component installation note at the top of the DTC Index
▪ The instrument cluster displays 'BSM System Fault' ▪ DTC U023300 is logged within	▪ Right driver display status LED - short to power	Refer to the electrical circuit diagrams and check right driver display status LED circuit for short to power. Clear DTC and re-test. If DTC remains suspect the right hand Blindspot Monitoring module. Check and install a new right hand Blindspot Monitoring module only,

SYMPTOM	POSSIBLE CAUSES	ACTION
the left hand Blind Spot Monitoring module ▪ The right driver display status LED is constantly illuminated	▪ Suspect right hand module failure	refer to the new module/component installation note at the top of the DTC Index
▪ The instrument cluster displays 'BSM System Fault' ▪ DTC U023300 is logged within the left hand Blind Spot Monitoring module ▪ When the system is powered up the right driver display status LED does not illuminate during the bulb self-checks	▪ Right driver display status LED - open circuit ▪ Suspect right hand module failure	Refer to the electrical circuit diagrams and check right driver display status LED circuit for open circuit. Clear DTC and re-test. If DTC remains suspect the right hand Blindspot Monitoring module. Check and install a new right hand Blindspot Monitoring module only, refer to the new module/component installation note at the top of the DTC Index
▪ The instrument cluster displays 'BSM System Fault' ▪ DTC U023300 is logged within the left hand Blind Spot Monitoring module ▪ When the system is powered up both the right driver display LEDs do not illuminate during	▪ Right mirror ground circuit - open circuit ▪ Suspect right hand module failure	Refer to the electrical circuit diagrams and check the right mirror ground circuit for open circuit. Clear DTC and re-test. If DTC remains suspect the left hand Blindspot Monitoring module. Check and install a new left hand Blindspot Monitoring module only, refer to the new module/component installation note at the top of the DTC Index

SYMPTOM	POSSIBLE CAUSES	ACTION
the bulb self-checks		

DTC INDEX

For a list of Diagnostic Trouble Codes (DTCs) that could be logged on this vehicle, please refer to Section 100-00. REFER to: Diagnostic Trouble Code (DTC) Index - DTC: Module Name: Blind Spot Monitoring System Module Left/Right (100-00, Description and Operation).

2012.0 RANGE ROVER (LM), 413-09

WARNING DEVICES

DESCRIPTION AND OPERATION

Component Location

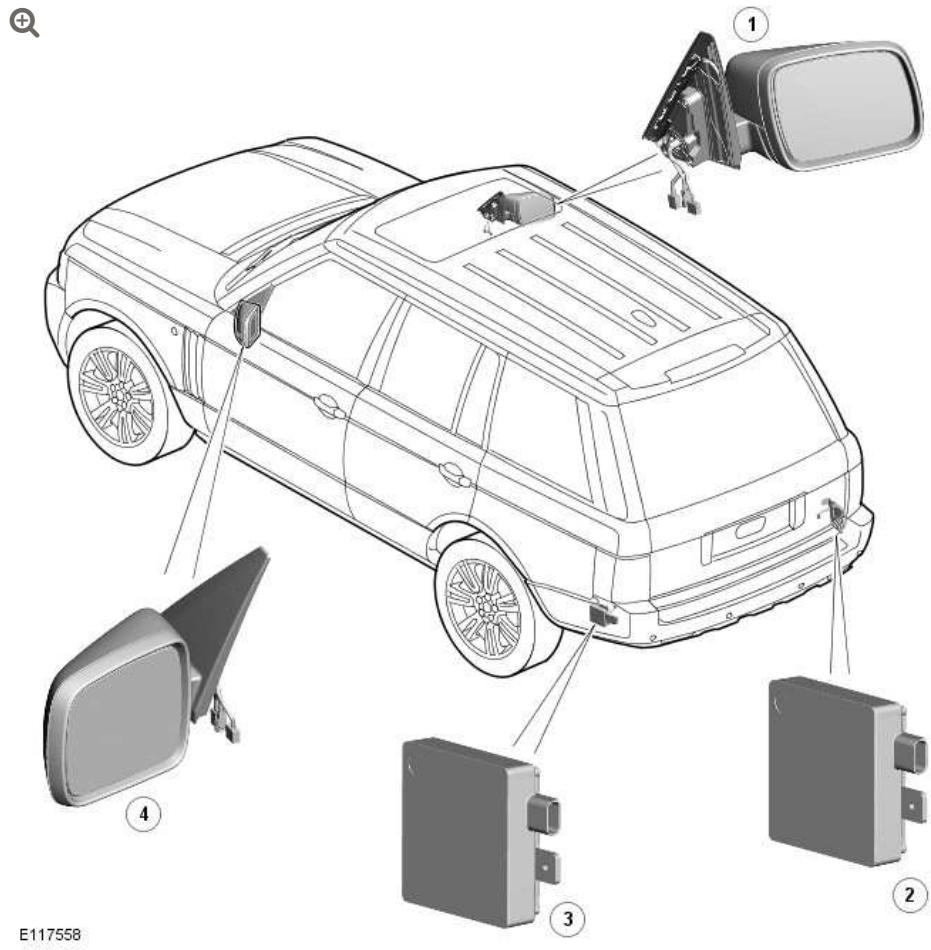

ITEM	DESCRIPTION
1	Right Hand Door Mirror Warning Lamp
2	Right hand Blind Spot Monitoring Module
3	Left Hand Blind Spot Monitoring Module

ITEM	DESCRIPTION
4	Left Hand Door Mirror Warning Lamp

OVERVIEW

Eliminating blind spots is a major element in vehicle body design, but because of the structural requirements of B, C and D pillars, blind spots cannot be entirely eliminated. Statistics show that some accidents are directly attributable to drivers moving across into the path of overtaking vehicles that have not been seen in conventional mirrors. New mirror designs have improved the situation, but by remotely covering areas that cannot be seen either directly or by the vehicle mirrors, have led to the introduction of a radar-based blind spot monitoring system.

The blind spot monitoring system comprises:

- LH (left-hand) Blind spot monitoring sensor
- RH (right-hand) Blind spot monitoring sensor
- LH (left-hand) door mirror
- RH (right-hand) door mirror

The system uses two radar modules operating at a frequency of 24 GHz and each combining the radar face and electronic module in a single unit. The modules are located behind the rear bumper surface, symmetrically, one on each side of the car behind the rear wheels. They are side facing and inclined rearwards at an angle of 16 degrees, which is dictated by the shape at the rear of the vehicle. Each module is calibrated to detect a vehicle in the driver's blind spot. Once a vehicle is detected the module illuminates an amber warning 'alert icon' LED (light emitting diode) in the relevant exterior door mirror. If there is a fault or blockage with the blind spot monitoring system an amber warning indicator dot LED (light

emitting diode) is displayed in the exterior mirror and the message ‘blind spot monitoring not available’ or ‘blind spot sensor blocked’ is displayed in the instrument cluster message center.

When the system initiates, it performs a self-check, during which the warning icons in the mirrors illuminate alternately for a short period of time. Each module does a left/right determination check when the ignition is switched on. Each mirror has a different circuit configuration so that the modules can determine which mirror they are connected to. If a module detects the wrong mirror it will go into a fault condition.

The blind spot monitoring modules receive vehicle speed on the medium speed CAN (controller area network) and are inactive until the vehicle reaches 16kph (10mph).

Each Blind Spot Monitor module emits a radar field greater than the blind spot area. The actual blind spot area is calibrated into the module during its manufacture.

CAUTION:

> The blind spot monitoring system is designed as a driver aid not a safety device. The driver should always exercise due care and attention whilst driving.

SYSTEM OPERATION

The purpose of the blind spot monitoring system is to detect an object moving with a positive velocity relative to the radar module, on either side of the vehicle, at a distance of up to 2.5 meters laterally and in an area from the door mirror up to 6.0 meters behind the module. These criteria identify an overtaking vehicle within the blind-spot area and within a typical carriageway lane width, while

eliminating other objects that are not relevant, either because of their position, they are stationary, traveling in the opposite direction, or being overtaken. A vehicle is classed as a heavy goods vehicle, car or motorcycle. A motorcycle is defined as a minimum size of 2.0m long, 0.8m wide (widest point) and 1.1m high. The system is not affected by the mass of the overtaking vehicle providing all identification criteria, including relative velocity of (16km/h - 10mph) or above, is met.

The system emits radar pulses and analyses the reflections, identifying anything that moves into the blind spot zone. Having detected another vehicle in the defined blind spot zone it alerts the driver by illuminating the amber alert icon located in the appropriate exterior mirror.

NOTE:

If an overtaking vehicle is detected on both sides of the vehicle simultaneously, the warning alert icons in both mirrors will illuminate.

The blind spot monitoring system lenses are shaped so as to minimize the visibility to other drivers. The LED (light emitting diode)'s are located towards the outside extremity of the mirror face, within the peripheral view of the driver but not in any area of the mirror where they could obscure or distract from the image.

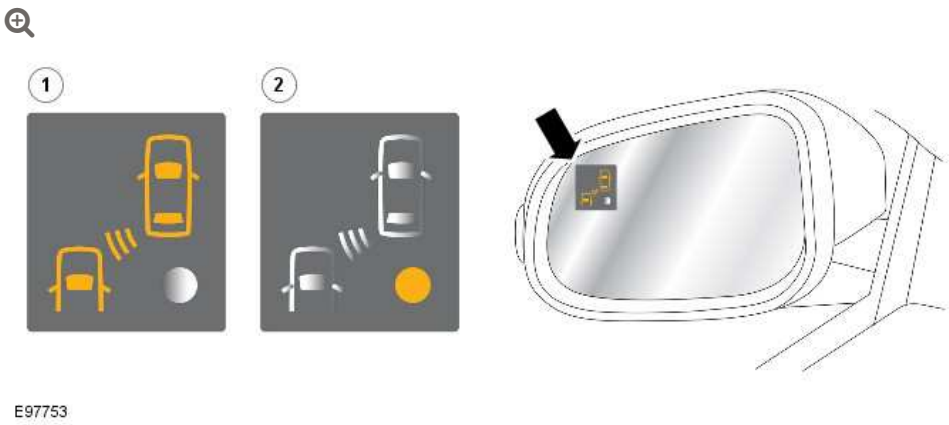

E97753

ITEM	DESCRIPTION
1	Warning alert icon
2	System status warning indicator

The LED (light emitting diode) lighting sequence is as follows;

- Amber alert LED (light emitting diode) icon permanently lit - system operational, vehicle detected in blind spot area
- No LED (light emitting diode) 's lit – system active no vehicle detected in blind spot area
- Amber status LED (light emitting diode) permanently lit - system not active or faulty

The system has operating limitations and is automatically turned off under certain operating conditions. During these operating conditions the amber status LED (light emitting diode) is permanently lit.

The system operating limitations are as follows;

- The area surrounding the radar face of the module must be clear of metallic items
- The system is inactive until vehicle speed is greater than 16km/h - 10mph (amber status LED (light emitting diode) permanently lit)

- The system is inactive if an approved trailer is connected to the vehicle (amber status LED (light emitting diode) permanently lit)
- The system is inactive when reverse gear or park is selected (amber status LED (light emitting diode) permanently lit)

If either of the radar signals are blocked or distorted, for example by water, the radar face of the module is covered in mud, sleet or snow the system may detect this and be disabled with the amber status LED (light emitting diode) permanently lit together with a ‘blind spot monitoring blocked’ message displayed in the instrument cluster message center. The system is disabled until the blockage is cleared.

If there is a fault in the system the amber status LED (light emitting diode) is permanently lit and a ‘blind spot monitoring not available’ message displayed in the instrument cluster message center. The system is disabled until the fault is rectified.

System fault and blockage warnings are as follows;

- The system is disabled when the radar module signal is blocked (amber status LED (light emitting diode) permanently lit and instrument cluster message)
- The system is disabled by a fault (amber status LED (light emitting diode) permanently lit and instrument cluster message)

If there is a failure in the communication network and the warning LED (light emitting diode) ’s cannot be displayed in the mirror, a failure message will be displayed in the instrument cluster message center.

When any faults are present in the system DTC (diagnostic trouble code) 's are stored in both blind spot monitoring modules appropriate to each module. Replacement of modules requires the right hand module to be configured using the Jaguar approved diagnostic equipment. Due to the fact that all modules are supplied

as left hand modules the replacement left hand modules do not require configuring.

Calibration of the modules using the Jaguar approved diagnostic equipment enables updates to be downloaded as new technology becomes available or any fault concerns require software updates.

Control Diagram

NOTE:

A = Hardwired: N = Medium Speed CAN bus

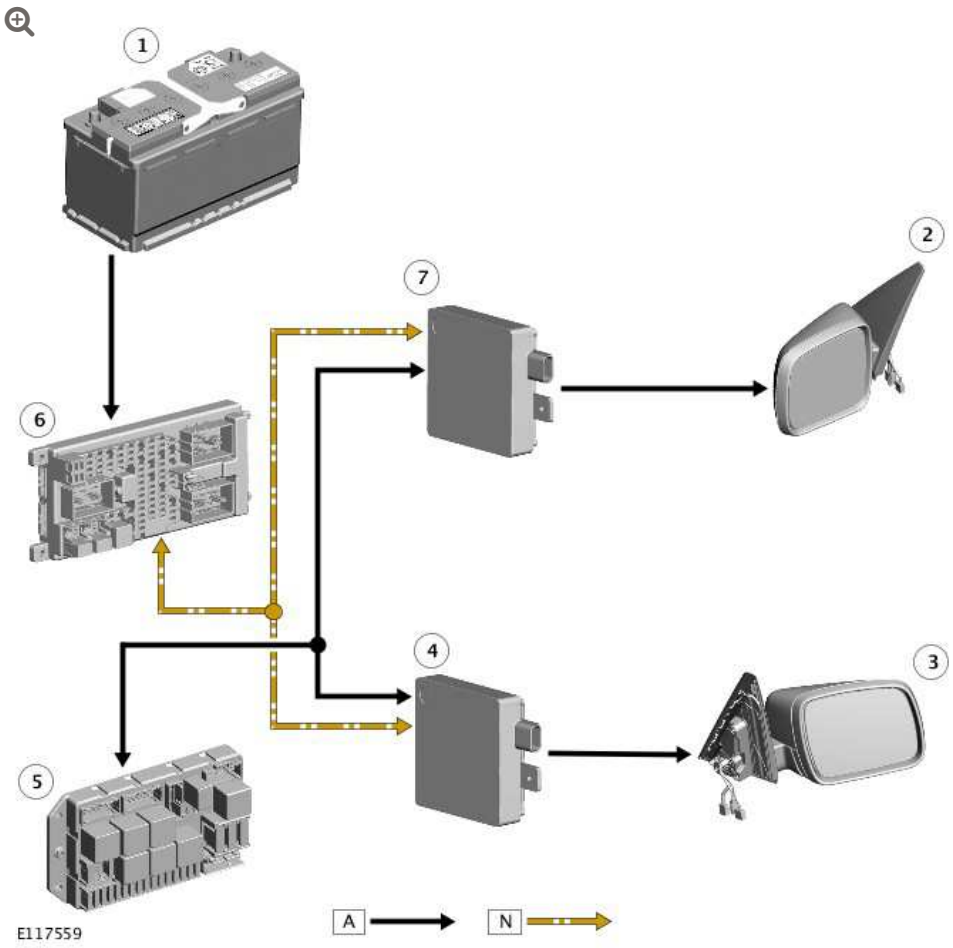

ITEM	DESCRIPTION
1	Battery

ITEM	DESCRIPTION
2	Left Hand Door Mirror
3	Right Hand Door Mirror
4	Right Hand Blind Spot Monitoring Module
5	Rear Fuse Box
6	Rear Fuse Box
7	Left Hand Blind Spot Monitoring Module

2012.0 RANGE ROVER (LM), 413-13

PARKING AID

DESCRIPTION AND OPERATION

COMPONENT LOCATION – PARKING AID

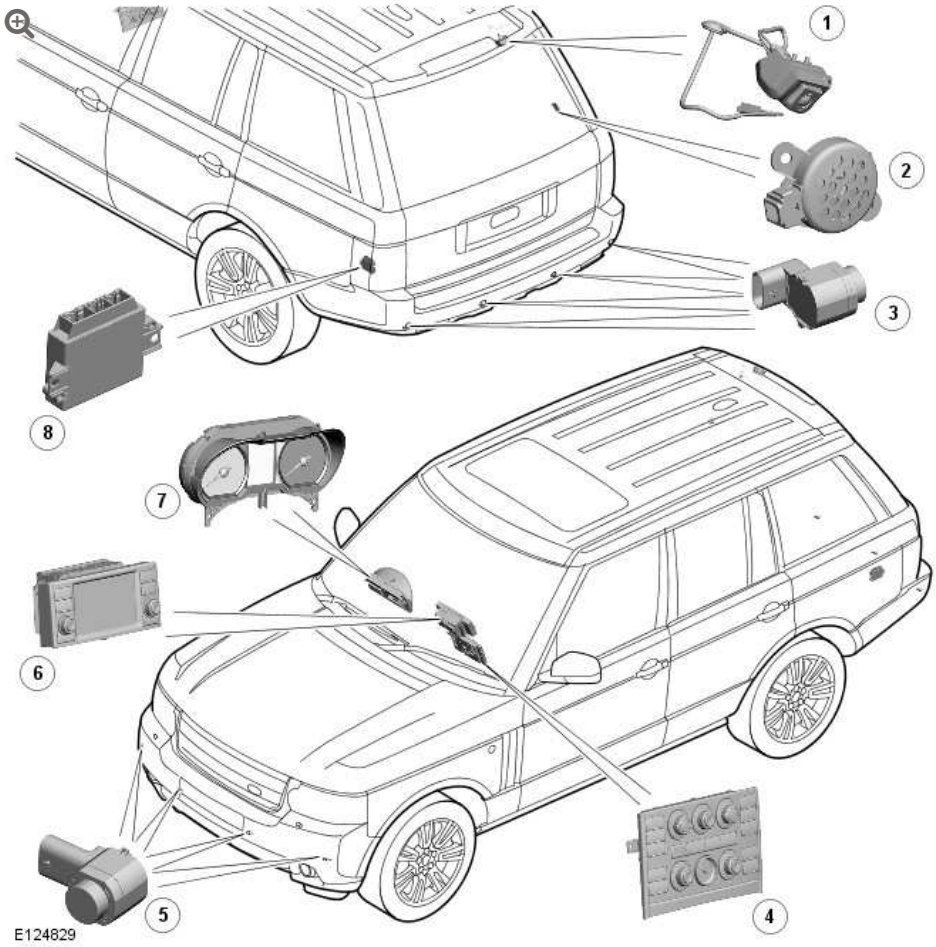

ITEM	DESCRIPTION
1	Rear view camera (if fitted)
2	Parking aid sounder

ITEM	DESCRIPTION
3	Rear parking sensor
4	Parking aid switch
5	Front parking sensor
6	Parking aid switch
7	Instrument Cluster
8	Parking aid module

OVERVIEW

The parking aid system provides an audible warning to the driver when any obstacles are in the path of the vehicle during forward and reverse parking manoeuvers. The system consists of 4 ultrasonic parking aid sensors in each bumper, a control module, a sounder and a switch. The system also uses the sounder driven by the instrument cluster.

At low speed, the parking aid module uses the sensors to monitor the area around the bumpers, then outputs a warning on the parking aid sounder or the instrument cluster sounder if an object is detected within a monitored area. As well as detecting solid objects such as posts, walls and other vehicles, the system can also detect less solid objects such as a wire mesh fence. Objects close to the ground may escape detection but, because of their low height, will not foul the vehicle.

Some vehicles may also be fitted with a rear view camera. The rear view camera provides the driver with a rear view image displayed on the touch screen display to assist when reversing the vehicle.

The rear view camera is located under the rear spoiler on the upper tail door, adjacent to the center high mounted stop lamp. The rear view camera is connected directly to the touch screen display via a

co-axial cable. The rear view camera transmits a wide angle, color image of the area at the rear of the vehicle which is displayed on the touch screen display when reverse gear is selected.

PARKING AID SENSORS

The ultrasonic parking aid sensors are transceivers which are installed in inserts in the bumpers. All 8 sensors are identical and keyed to the inserts to ensure correct orientation.

When the system is active, the sensors transmit ultrasonic pulses. Any reflections from the pulses received by the transmitting and adjacent sensors are then converted to digital format and output to the parking aid module.

PARKING AID MODULE

The parking aid module is located next to the auxiliary junction box (AJB), behind the trim in the right-hand (RH) side of the luggage compartment.

INPUTS AND OUTPUTS

Three connectors provide the interface between the parking aid module and the vehicle wiring. The parking aid module is powered by the AJB. In addition to hardwired connections with the parking aid sensors, parking aid sounder and power supply, the parking aid module communicates with the instrument cluster on the medium speed CAN (controller area network).

PARKING AID SOUNDER

The parking aid sounder produces the audible warnings with which the parking aid module informs the driver of system status and objects detected at the rear of the vehicle. The parking aid sounder

is installed behind the trim in the RH side of the luggage compartment, on the underside of the shelf.

The chime produced by the parking aid sounder has a lower tone than that produced by the instrument cluster sounder (which is used to warn of objects detected at the front of the vehicle), to enable the driver to differentiate between the two.

PARKING AID SWITCH

The parking aid switch is a non latching push switch installed on the center console for selecting the system on and off. When pressed, the switch connects a ground to the parking aid module. An orange light emitting diode (LED) above the switch indicates when the parking aid system is active. The LED is activated by a power feed from the parking aid module.

CONTROL DIAGRAM – PARKING AID

NOTE:

A = Hardwired; **N** = Medium speed controller area network (CAN) bus

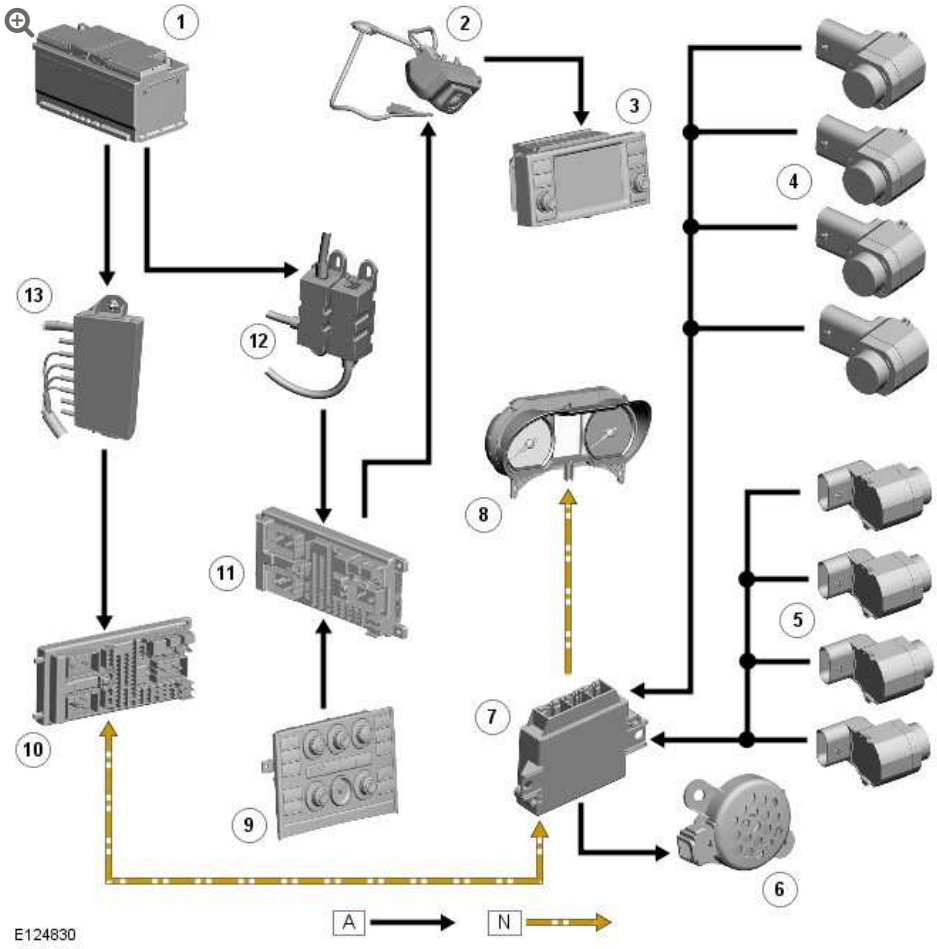

ITEM	DESCRIPTION
1	Battery
2	Rear veiw camera, central junction box (CJB)
3	TSD (touch screen display)
4	Front parking aid sensors
5	Rear parking aid sensors
6	Parking aid sounder
7	Park distance module
8	Instrument cluster
9	Parking aid switch
10	RJB (rear junction box) Rear parking aid sensors
11	CJB (central junction box)
12	BJB (battery junction box)

ITEM	DESCRIPTION
13	BJB 2

PRINCIPLES OF OPERATION

When the vehicle is in power mode 6 and either reverse gear is selected or the parking switch is pressed, both sets of acoustic sensors are activated. The parking aid module only activates the system if reverse is selected for more than 1 second, to avoid nuisance audible warnings when the gear selector lever is being moved between Drive and Park. The rear sensors are disabled when a trailer is connected to the vehicle.

Park Distance Control Detection Areas

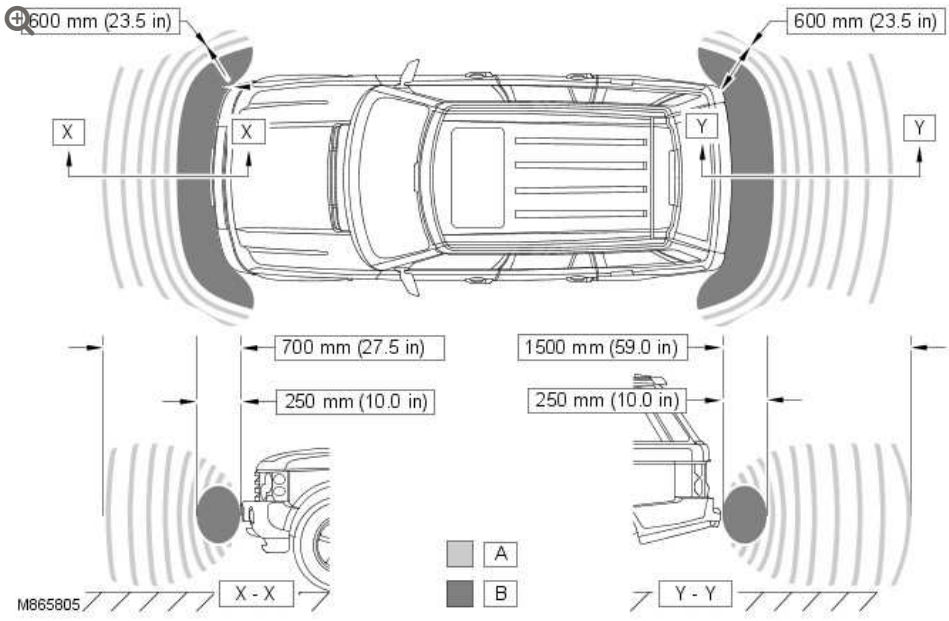

When it activates the system, the parking aid module illuminates the indicator LED in the parking aid switch, switches on the parking aid sensors and generates a single chime on the parking aid sounder and the instrument cluster sounder to indicate the system is active. The parking aid module then processes the distance readings from the sensors to determine if there are any objects within the detection areas.

If there are no objects in the detection areas, there are no further audible warnings. If an object is detected, repeated audible warnings are produced on the parking aid sounder or the instrument cluster sounder as appropriate. The time delay between the audible warning tones decreases as the distance between the detected object and the vehicle decreases until, at approximately 250 mm (10 in), the audible warning tone is continuous.

After the initial detection of an object, if there is no decrease in the distance between the object and the vehicle:

- If the object is detected by one of the central acoustic sensors the time delay between audible warning tones remains constant
- If the object is detected by a corner transducer the audible warning tones stop after approximately 3 seconds.

The audible warning tones are discontinued when the gearbox selector lever is moved out of reverse, but will restart if the parking aid module detects a decrease in the distance between the vehicle and an object.

System operation is cancelled when the vehicle is in power mode 0. System operation is also cancelled if the vehicle travels more than 50 m (164 ft) or forward speed exceeds 19 mph (30 km/h).

The parking aid module software incorporates routines that compensate for the effect of ice, frost and rain on the parking aid sensors. Ice compensation occurs if the ambient temperature is less than 6°C (43°F).

DIAGNOSTICS

The parking aid module performs self check routines and checks the system wiring for short and open circuits. While the system is active the parking aid module also monitors the data from the parking aid sensors.

If a fault is detected, a related diagnostic trouble code (DTC) is stored in the non volatile memory of the parking aid module and either the front sensors, the rear sensors or the complete system is disabled, as appropriate. To advise the driver of the failure, the parking aid module flashes the indicator LED at 2 Hz and sounds a continuous warning tone for 3 seconds, in place of the normal short tone, when the system is activated.

DTC's can be accessed using the Land Rover approved diagnostic system, which communicates with the parking aid module via the instrument cluster and the medium speed CAN bus.

REAR VIEW CAMERA

When reverse gear is selected, the transmission control module (TCM) provides a reverse gear signal to the integrated head unit over the high speed CAN bus. On receipt of the reverse gear signal, the integrated head unit will instruct the touch screen display to display the image from the rear view camera.

The rear view camera image is not displayed under the following circumstances:

- The transmission is in 'D' drive and the vehicle speed is more than 16 km/h (10 mph)
- 'D' drive has been selected on the transmission for more than the 15 seconds time-out period and the vehicle speed is less than 16 km/h (10 mph).

The rear view camera is selected by moving the transmission selector lever to 'R' reverse. The touch screen display changes automatically to rear view camera display. The rear view camera image can be cancelled at any time by pressing the 'return' icon in the top right hand corner of the touch screen display.

When the rear view camera is active, a disclaimer is displayed across the top of the touch screen display to warn the driver to take care when performing reverse manoeuvers.

PROXIMITY CAMERA SYSTEM

Proximity Camera Component Location

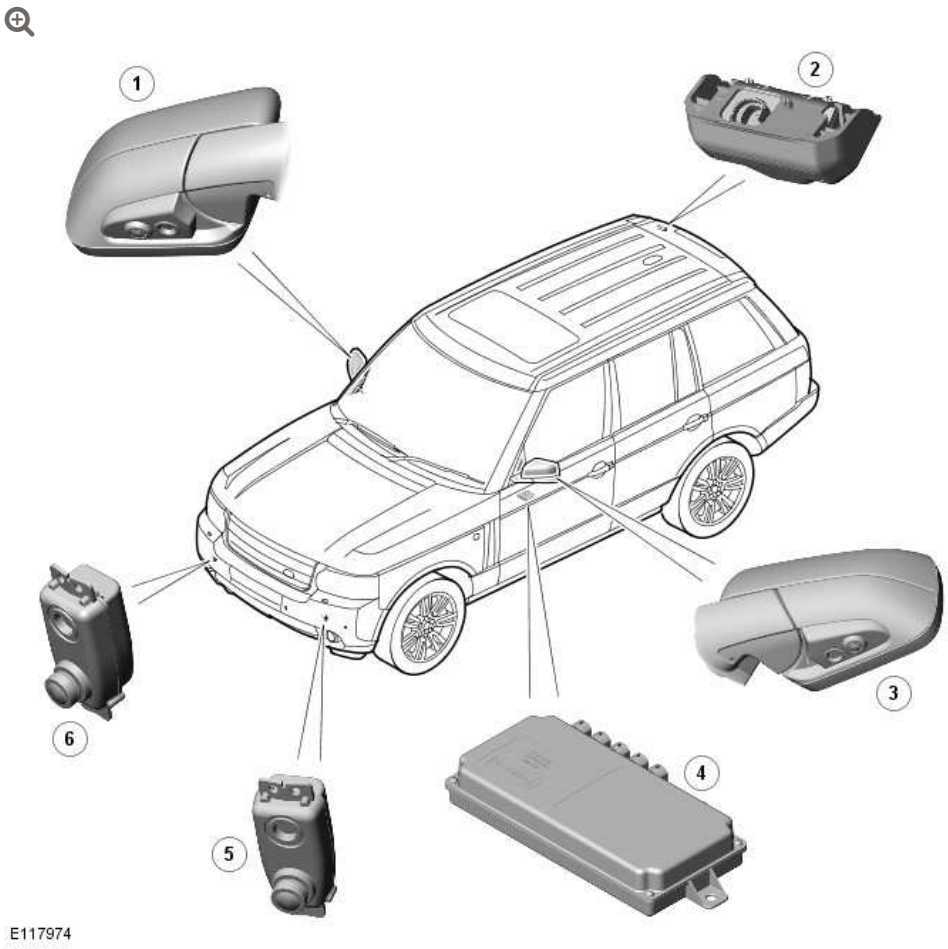

ITEM	DESCRIPTION
1	RH (right-hand) mirror camera
2	Rear view camera
3	LH (left-hand) mirror camera
4	Control module
5	LH front bumper camera
6	RH front bumper camera

ITEM	DESCRIPTION

OVERVIEW

The proximity camera system provides the driver with a visual-aid when maneuvering the vehicle at low speeds. The system uses a dedicated control module to capture the camera data and display the resulting images on the TSD (Touch Screen Display), providing the driver with a 360° view around the vehicle. The camera system is also supported by various driving-aid features where graphical information and warnings are superimposed onto the images displayed on the TSD.

The proximity camera system uses five VGA (Video Graphic Array) resolution cameras:

- Two mounted in the front bumper
- One mounted in each door mirror
- One mounted in the tailgate spoiler.

Camera Coverage Zones

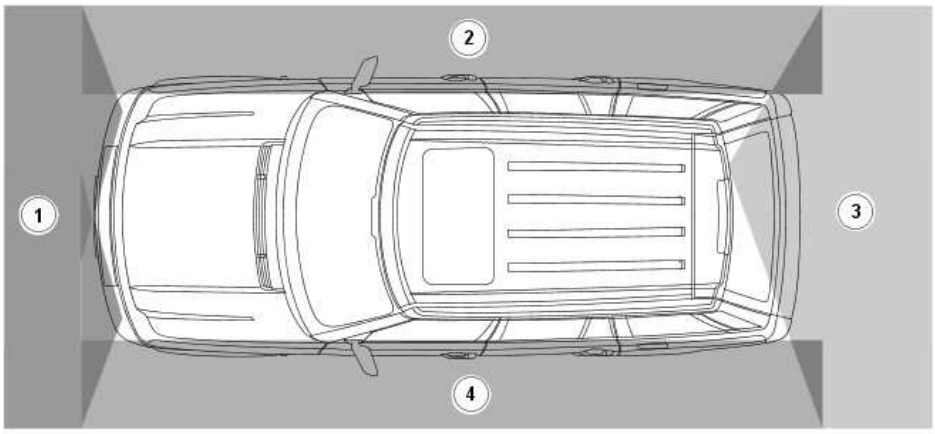

E117972

ITEM	DESCRIPTION
1	Front camera coverage zone
2	RH mirror camera coverage zone
3	Rear camera coverage zone
4	LH mirror camera coverage zone

SYSTEM DESCRIPTION

Proximity Camera Control Module

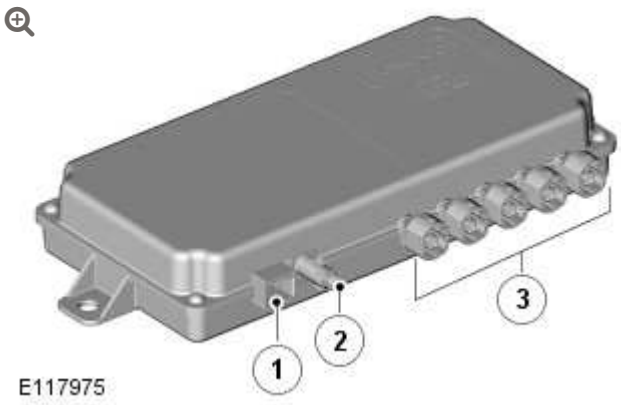

ITEM	DESCRIPTION
1	Power supply, ground and BUS connector
2	Connection to touch screen display
3	Five camera connections

The proximity camera control module is located under the left-hand-front seat; connections to the module include:

- medium speed CAN network
- five camera inputs
- video signal output to the TSD
- power supply and ground.

The control module gathers the camera images and analyses and alters them by adjusting perspectives and applying corrections. The resulting processed images are then relayed to the touch screen display via the NTSC (National Television System Committee) analogue video line.

The control module also adds guidance and warning overlays to the camera images to create the various driving-aid features supported by the camera proximity system; for example, visual direction is made available when reversing the vehicle.

The module communicates with each individual camera via the LIN (local interconnect network) bus connection. This data link transmits diagnostic information, for example camera serial numbers and fault notifications to the control module. Camera adjustments, for instance a correction to color-balance are also communicated via the LIN bus link to the camera.

Image signals are relayed to the control module via the LVDS (Low Voltage Differential Signal) lines. The system uses the LVDS communication protocol to enable fast, interference-free data transmission. Data transmission speeds run in the region of 800 Mbps, this however is dependent on image content.

This LVDS communication link features a twisted pair of wires carrying a ‘high’ signal and a ‘low’ signal, similar to the high speed CAN with regard to a ‘mirrored’ signal. The voltage differential level operates between 250 - 450 mV.

LVDS Signal

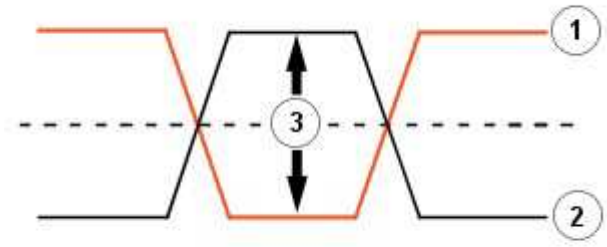

E118323

ITEM	DESCRIPTION
1	LVDS ‘low’ signal
2	LVDS ‘high’ signal
3	250 – 450 mV Differential

In addition to the data lines the camera receives a power supply and a ground from the control module.

NOTE:

Care must be taken when routing, disconnecting and reconnecting the camera harnesses.

Cameras



E117977

The system uses five VGA resolution cameras, permanently powered whenever the ignition is 'on'. Each camera provides an image covering a zone approximately 130° wide by 112° deep and is capable of capturing approximately thirty frames per second.

The cameras employ high-quality digital, HDR (High Dynamic Range) imaging, which is a set of techniques that allows a greater range of luminance between light and dark areas of an image scene. This allows HDR to more accurately represent the varying intensity levels found in the image scenes that can range from direct sunlight to deep shadows.

HDR Image Comparisons

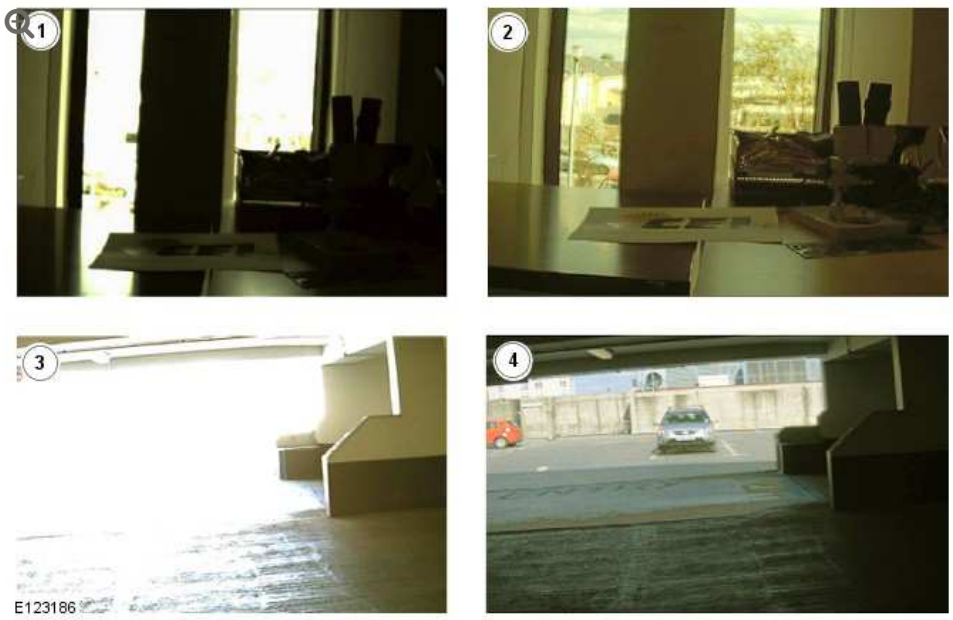

ITEM	DESCRIPTION
1	Shadow without HDR
2	Shadow with HDR
3	Sunlight without HDR
4	Sunlight with HDR

NOTE:

Reversing lights are crucial to successful night operation of the rear view camera.

Camera mounting

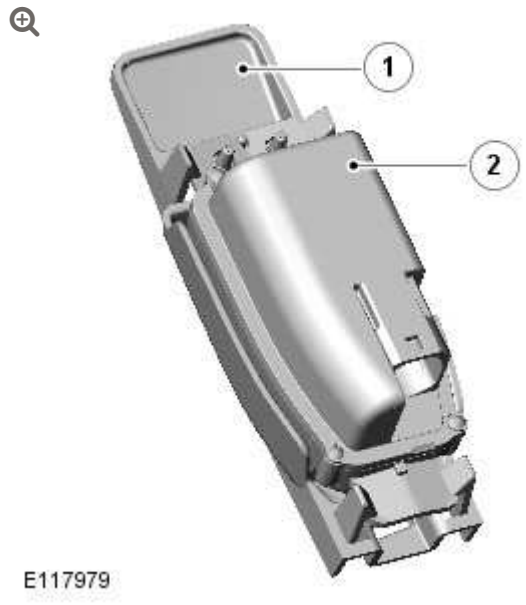

ITEM	DESCRIPTION
1	Camera ‘break free’ bracket
2	Camera

To reduce the cost of accident repair the mounting of the front bumper cameras feature a ‘snap free’ bracket. On impact, the bracket will release the camera preventing damage to the camera itself. Depending on the severity of the accident it may also be possible to reuse the brackets as they are manufactured from a memory type plastic.

The front cameras are not ‘handed’ so therefore interchangeable. This is also applicable for the door-mirror cameras, although these

cameras do feature the approach lighting LED (light emitting diode) integral within the camera body.

The positioning accuracy of all the cameras is crucial for the successful operation of the proximity camera system. The camera housings are manufactured using metal to maintain a structural stability in high-ambient temperatures. Without this stability a loss of image focus would be a possibility, therefore care must be taken when mounting the cameras in ensuring they sit correctly into their locations. Secure mounting of the cameras provides an initial 'build up' tolerance accurate to 2 mm. In the event of camera replacement a calibration routine must be performed.

CAMERA OBSTRUCTION DETECTION

In the instance of soiling of the camera lens, the system has the capability to detect obstructions and notify the driver that the lens requires cleaning via a prompt in the TSD. The obscured camera scene is highlighted with an amber arrow.

Camera obstruction detection operates by the system looking for non-moving particles on the captured image. The level of obstruction has to reach approximately 85% coverage of the lens before the obstruction notification is issued. To achieve this level of obstruction at the camera, the general vehicle soiling level will be very high and therefore obstruction of the camera is to be expected.

CONTROL DIAGRAM

NOTE:

A = Hardwired; **N** = Medium Speed CAN Bus; **O** = LIN Bus; **AD** = NTSC Signal; **AE** = LVDS Signal.

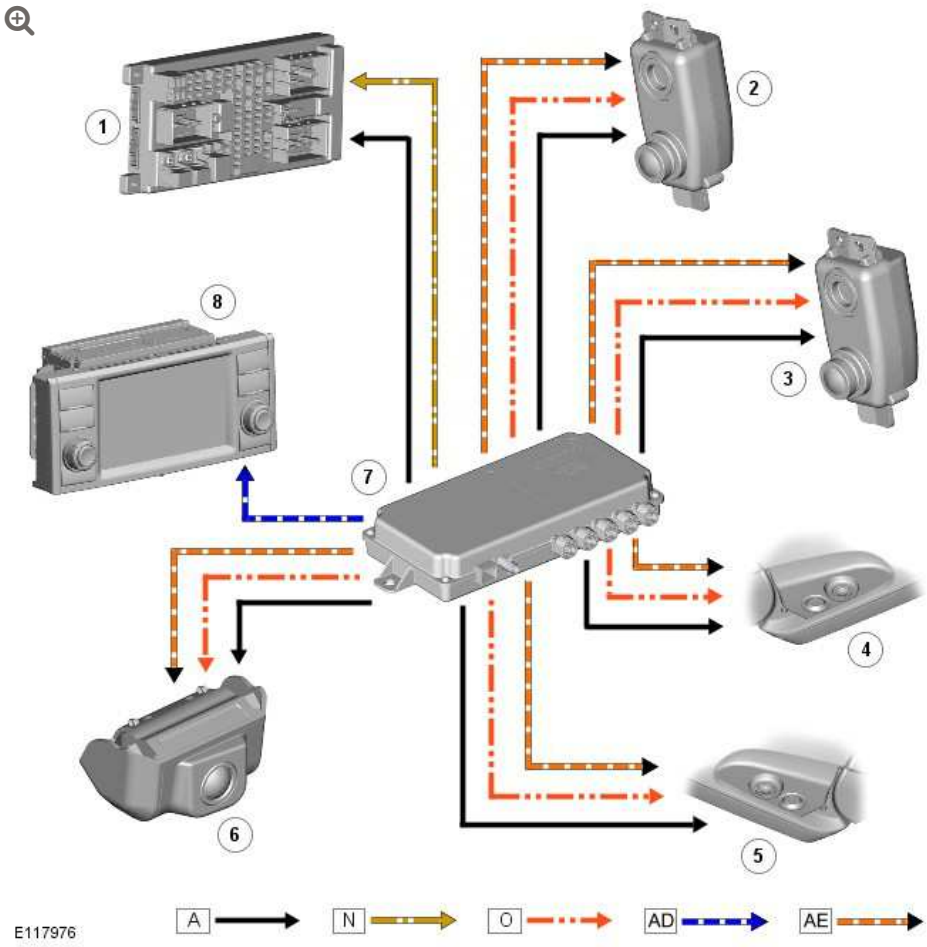

ITEM	DESCRIPTION
1	CJB
2	Front bumper camera
3	Front bumper camera
4	Mirror camera
5	Mirror camera
6	Rear view camera
7	Proximity camera control module
8	TSD

SYSTEM OPERATION

AUTOMATIC OPERATION

- With the ignition ‘on’ and either ‘Park’ or ‘Neutral’ selected the screen displays images of the area surrounding the vehicle.
- When either ‘Drive’ of ‘Reverse’ are selected the relevant camera view for the direction of movement is shown.
- Once the vehicle speed exceeds 18 km/h (11 mile/h) the images will automatically switch off.
- Once automatically switched off, the camera view will be disabled until:
  - another ignition cycle occurs and the system is automatically functioned, or
  - the camera system is manually selected on the Touch Screen Display (TSD).

MANUAL OPERATION

- The camera home page is accessed using the ‘Cameras’ icon on the ‘Navigation’ home screen on the TSD.
- Camera views can be accessed when the vehicle is stationary with either ‘Park’ or ‘Neutral’ selected.
- Camera views can also be accessed when either ‘Drive’ or ‘Reverse’ are selected and will remain viewable when the vehicle is in motion.

SELECTING VIEWS

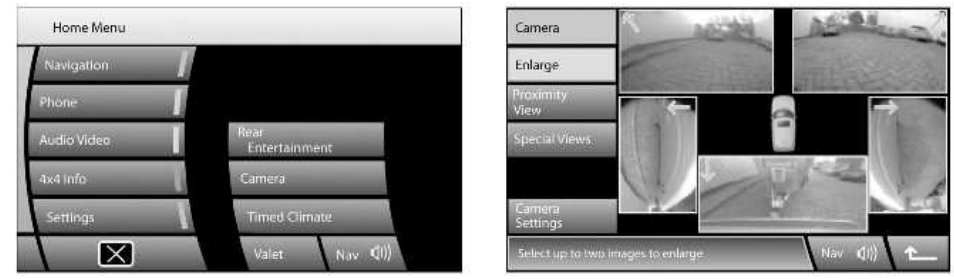

E117981

- Displayed on the home page are real-time images transmitted from each of the five cameras.
- Any two of the images can be selected and enlarged to view side-by-side on the screen.
- When viewing any two images, any single image can then be selected to view as a full screen image which can be zoomed and panned around using the magnifier and arrow icons.

MANUAL PROXIMITY VIEW

- Selecting proximity view from the camera home screen will display a combination of three images from the front passenger side cameras. These images provide the driver with an enhanced view of the area forward and opposite the driver.

REAR VIEW CAMERA



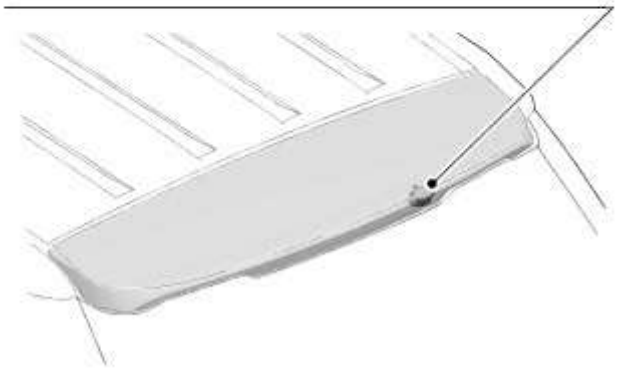

E139948

The rear view camera provides additional information to the driver when reversing the vehicle. When reverse gear is selected the camera integrated into the rear spoiler, automatically displays a wide-angle color image of the view from the rear of the vehicle onto the TSD.

The rear view images are overlaid with:

- Dashed lines representing the perimeter of the vehicle.
- Solid lines representing the predicted trajectory of the vehicle; calculated from the steering wheel angle sensor.
- Colored bars represent the amount of distance between the vehicle and the object being approached. Working in conjunction with the standard ‘rear parking aid’ this adds a visual representation to the existing audible warning. The distance data is received from the parking aid module via the medium speed CAN.

The reversing-aid graphics can be disabled for the current drive cycle in the settings menu.

Reversing Visual Warnings

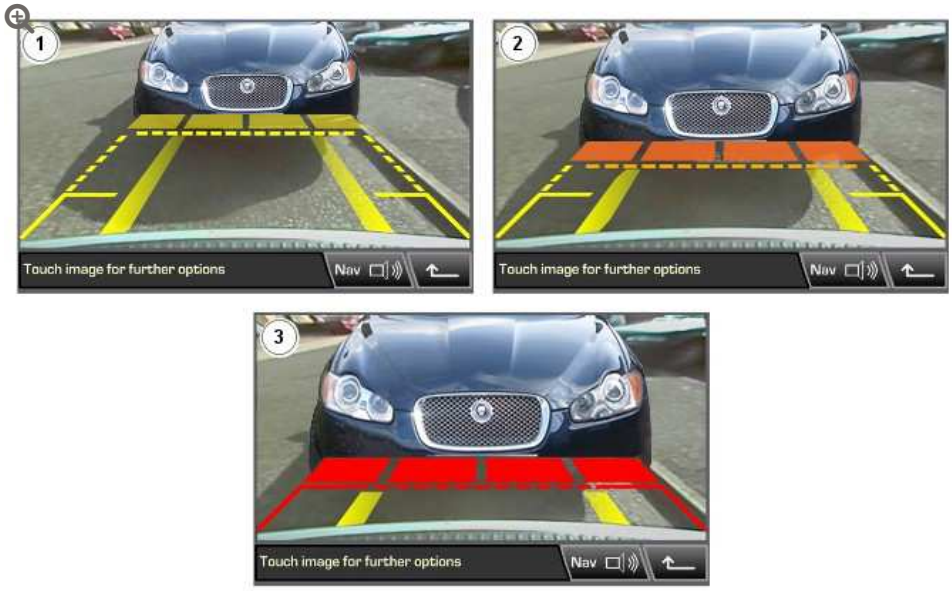

E117982

ITEM	DESCRIPTION
1	Object being approached - 'yellow strip' with steady intermittent warning tone
2	Object being approached - 'orange strip' with faster intermittent warning tone
3	Object being approached - 'red strip' with continuous warning tone

The rear view image will not be displayed when any of the following apply:

- Drive is selected for longer than 15 seconds.
- Drive is selected and the vehicle speed is greater than 18 km/h (11 mile/h).

SPECIAL VIEWS

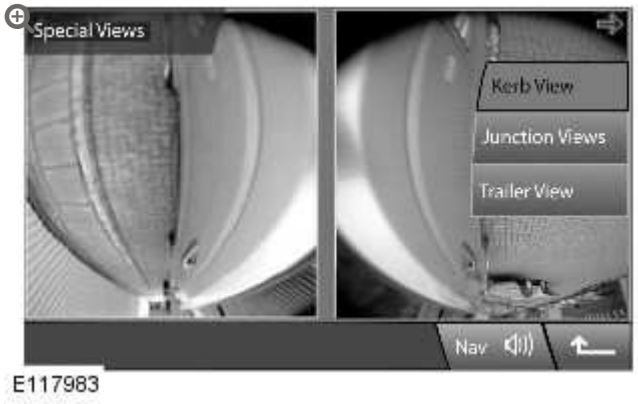

The special views are a selection of pre-set views that provide the driver with some useful driving aids. These can be considered as a shortcut to some pre-determined images that have been developed to assist the driver in various situations:

- Kerb view: downward view from the two door mirror cameras.
- Junction view: outward view from the two front cameras.
- Trailer view: rear camera view of trailer being towed.

SYSTEM CALIBRATION

To achieve viewing accuracy from the proximity cameras, strict tolerances are calibrated into the system when the vehicle is static. Continual dynamic adaptation of the system then takes place when the vehicle is in motion. This is an automated process performed by the proximity camera control module.

This level of accuracy must be maintained after any service procedures are performed on the vehicle that affects the proximity camera system. Should the control module or any one of the cameras require replacement, static re-calibration must be carried out using the approved Land Rover diagnostic equipment.

Camera replacement is detected by the proximity camera control module, through the recognition of a new serial number during the ‘camera count’ procedure that takes place during the ‘ignition on’

phase via the LIN. This detection will log a DTC (diagnostic trouble code) advising a calibration routine should be performed.

Alignment adjustments to the cameras are performed using the diagnostic equipment and the vehicle's TSD (touch screen display). During the calibration procedure, setup software in the control module overlays fine colored lines on the TSD highlighting reference points on the bodywork. For example, the mirror camera image must capture the side repeater indicator, the shut-line of the doors and the lower sill trim.

Direction arrows are pressed to shift the image in the desired direction to meet the reference points viewed on the TSD.

Adjustments include:

- Up
- Down
- Left
- Right
- Rotation

When the reference points correspond exactly, the setting is saved and the calibration procedure is complete for that camera.

NOTE:

If body repairs are performed that affect the camera system, a calibration procedure must be executed after the repairs are completed.

SYSTEM FAULT

There are two possible types of fault relative to the cameras:

- Camera fault (no communication).
- Camera view obscured (see 'Camera Obstruction Detection' section for further information).

In the event of camera fault, a DTC is logged in the proximity camera control module and an icon is presented to the driver on the TSD (touch screen display) where the camera image would normally be viewed.

Each camera view has an orientation icon displayed in the top left hand corner and has two color states:

- Blue – ok
- Amber – camera problem

TOW ASSIST

Tow Assist aids the driver with the reversing of a trailer by displaying information on the TSD (touch screen display).

The system uses a tracking target sticker attached to the trailer to monitor and predict the direction of the trailer. Calculations are made by the proximity camera control module, based on the relationship of angles between the vehicle and trailer and the current steering wheel position.

Tow Assist becomes active when a trailer is attached to the vehicle and the trailer electrical plug is attached to the vehicle socket. The CJB detects the connection has been made and sends a message via the medium speed CAN to the proximity camera control module.

NOTE:

> If the connection is not detected, setup can be manually prompted by touching the 'Tow Assist' icon on the 'Camera' menu.

TOW ASSIST – NEW TRAILER

When the CJB detects the trailer electrical plug has been connected, the trailer setup screen is displayed automatically on the TSD with the question: 'Has a trailer been connected?'

Selecting 'Yes' will bring up the first of a number of trailer setup screens. On first use the setup screens take the user through a series of configuration options for the connected trailer. To configure a new trailer select 'Add New' and then 'OK'.

Trailer Setup – Step 1 of 6

- Choose from the list of generic trailer descriptive names for the trailer attached, then select 'Next'.

Trailer Setup – Step 2 of 6

- Position the trailer straight behind the vehicle, to allow more accurate positioning of the target. Stick the self adhesive tracking target to the front of the trailer within the orange highlighted zone as displayed, then select 'Next'.
- The highlighted zone will turn green when the target sticker is correctly positioned.

Tracking target sticker

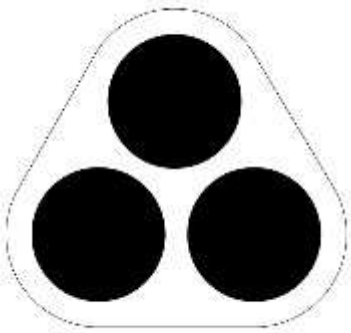

E125745

Trailer Setup – Step 3 of 6

- Select the correct number of axles for the chosen trailer, then select ‘Next’.

Trailer Setup – Step 4 of 6

- Select the preferred camera view for use with this trailer, then select ‘Next’.

NOTE:

The Side Cameras view is more suited to tall and/or long trailers for example caravans. The Reverse Camera view is more suited to small and/or short trailers.

Trailer Setup – Step 5 of 6

- Using the numeric pad, enter the Hitch Length of the trailer, then select ‘Next’.

NOTE:

Hitch Length is the distance from the hitch point to the pivot point of the trailer. The pivot point will vary depending on the number of axles, and will be:

- the center-line of the axle on a single axle trailer,
- the mid-point between the axles on a twin axle trailer,
- the center line of the center axle on a triple axle trailer.

Trailer Setup – Step 6 of 6

- Using the distance adjustment buttons, set the orange overlay graphics at the width of the trailer wheels, or trailer edges when a tall trailer is to be used, then select 'Finish'.

NOTE:

The orange overlay graphics determine the position of the trailer reverse guidance lines.

A confirmation message will appear to show that the trailer information has been retained.

Finally, highlight the trailer that has been memorized, and select 'OK'.

NOTE:

In order to learn the central position of the trailer, the vehicle must be driven forwards at less than 15mph with the steering wheel in the straight-ahead position. There is currently no confirmation for when this process has completed, however the status can be derived by selecting Reverse gear and noting the presence of message 'Trailer tracking in progress'. Whilst tracking feature is learning the central position, the trailer trajectory lines will appear in a light blue color, when process is complete they will change to a dark purple color.

The Tow Assist feature is now ready to use.

TOW ASSIST – PREVIOUSLY SAVED TRAILER

When the CJB detects the trailer electrical plug has been connected, the trailer setup screen is displayed automatically on the TSD with the question: 'Has a trailer been connected?'

Selecting 'Yes' from the previous screen brings a list of pre-set, or previously saved, trailers. Highlight the required trailer, and select 'OK'.

NOTE:

In order to learn the central position of the trailer, the vehicle must be driven forwards at less than 15mph with the steering wheel in the straight-ahead position. There is currently no confirmation for when this process has completed, however the status can be derived by selecting Reverse gear and noting the presence of message 'Trailer tracking in progress'. Whilst tracking feature is learning the central position, the trailer trajectory lines will appear in a light blue color, when process is complete they will change to a dark purple color.

The Tow Assist feature is now ready to use.

PARKING AID

DIAGNOSIS AND TESTING

PRINCIPLES OF OPERATION

For a detailed description of the parking aid system, characteristics and limitations refer to the relevant description and operation section in the workshop manual. REFER to: Parking Aid (413-13 Parking Aid, Description and Operation).

PARKING AID SYSTEM ON-BOARD SELF-TEST

As part of the strategy of the system if any DTCs are detected, a long high-pitched tone approx 3 seconds will sound and the parking aid switch (where fitted) indicator LED will flash 6 times at ignition on

- If a fault is present when the parking aid system is activated then the parking aid switch (where fitted) status LED will flash 6 times indicating an issue with front or rear parking aid sensors, wiring switch, parking aid control module or hard wired sounders
- The rear parking aid sounder/rear audio system will emit an error tone for approx 3 seconds at ignition on if a fault is detected with the front or rear sensors, the switch, or if there is a controller area network (CAN) bus error
- (Only applicable to vehicles fitted with front parking aid and a hard wired rear parking aid sounder). If there is a fault with the rear

parking aid sounder the error tone will come from the front parking aid sounder unit (integral with the instrument cluster)

Audible and Visual Warnings when Parking Aid System is in Error State

REAR PARKING AID SYSTEM FITTED AND NO PARKING AID SYSTEM SWITCH FITTED	REAR PARKING AID SYSTEM FITTED AND PARKING AID SYSTEM SWITCH FITTED	FRONT AND REAR PARKING AID SYSTEM FITTED WITH PARKING AID SYSTEM SWITCH FITTED
A long high-pitched error tone will sound at Ignition On for approx 3 seconds	▪ A long high-pitched error tone will sound at ignition on for approx 3 seconds and the parking aid switch indicator LED will flash 6 times at ignition on. Every time the parking aid system is activated within the same ignition cycle, parking aid switch indicator LED will flash 6 times	▪ A long high-pitched error tone will sound at ignition on for approximately 3 seconds and the parking aid switch indicator LED will flash 6 times at ignition on. Every time the parking aid system is activated within the same ignition cycle the parking aid switch indicator LED will flash 6 times

INSPECTION AND VERIFICATION

CAUTIONS:

- If the control module or a component is suspect and the vehicle remains under manufacturer warranty, refer to the warranty policy and procedures manual (section B1.2), or determine if any prior approval programme is in operation, prior to the installation of a new module/component.
- Diagnosis by substitution from a donor vehicle is **NOT** acceptable. Substitution of control modules does not guarantee confirmation of a fault, and may also cause additional faults in the vehicle being tested and/or the donor vehicle
- Do not apply any grease based products to any parking aid system connector or pins

NOTE:

Check DDW for open campaigns. Refer to the corresponding bulletins and SSMs which may be valid for the specific customer complaint and carry out the recommendations as required.

1. Verify the customer concern
2. Visually inspect for obvious signs of mechanical or electrical damage
3. Ensure that the parking aid sensor face is clear of contamination that could affect the performance of the sensor

Visual Inspection

MECHANICAL	ELECTRICAL

MECHANICAL	ELECTRICAL
▪ Parking aid sensor condition/damaged ▪ Parking aid sensor installation and holder ▪ Parking aid sensor alignment ▪ Parking aid sensor contamination ▪ Bumper cover(s) ▪ Vehicle ride height ▪ Non standard/non manufacturer approved accessories fitted	▪ Battery ▪ Fuse(s) ▪ Relays ▪ Wiring harness ▪ Electrical connector(s) ▪ Front parking aid sensor(s) ▪ Rear parking aid sensor(s) ▪ Parking aid switch and LED ▪ Parking aid control module ▪ Parking aid sounder ▪ Audio system

4. If an obvious cause for an observed or reported concern is found, correct the cause (if possible) before proceeding to the next step

5. If the cause is not visually evident, check for diagnostic trouble codes (DTCs) and refer to the DTC index

Symptom Chart

CAUTION:

Do not apply any grease based products to any parking aid system connector or pins

NOTES:

- Please note if this diagnosis is being carried out on a vehicle without a hard wired parking aid speaker, ensure the in car infotainment system is fully functional and configured correctly
- Parking aid sensors that are painted incorrectly and not to the manufacturer standards, will not be considered in any warranty claim

SYMPTOM	POSSIBLE CAUSES	ACTION
NOTE: Permanent/Intermittent fault Parking aid system not functioning correctly. (No DTCs displayed)	▪ Front or rear parking aid sensors dirty ▪ Front or rear parking aid sensor position incorrect ▪ Front or rear parking aid sensor incorrectly installed ▪ Front or rear parking aid sensor coupling rings not installed/incorrectly installed ▪ Parking aid control module or parking aid sensor connector not fully latched ▪ Parking aid sensors painted without being removed from the bumper assembly or not painted to the manufacturer specification	▪ Clean front or rear parking aid sensors ▪ Check the front or parking aid rear sensor position ▪ Check the front or rear parking aid sensor are correctly installed ▪ Check front or rear parking aid sensor coupling rings are installed/installed correctly ▪ Ensure all parking aid system connectors are correctly latched ▪ Remove parking aid sensor and ensure correctly painted parking aid sensor is installed ▪ Parking aid sensors that are painted

SYMPTOM	POSSIBLE CAUSES	ACTION
		incorrectly and not to the manufacturer standards, will not be considered in any warranty claim
NOTE: Permanent/Intermittent fault Parking aid system not functioning correctly. (No DTCs displayed). System characteristics or environmental effects	▪ Parking aid sensors incorrectly mounted ▪ Incorrect vehicle ride height ▪ Dirty parking aid sensor face. Ice/snow covered sensor. Debris trapped between parking aid sensor and parking aid sensor body. Heavy rain or water splash from the ground ▪ Non standard, bumper, exhausts/tailpipes, tow bar or external spare wheel mounting ▪ Area around vehicle is not clear of obstacles such as channels, gutters or other items on the ground ▪ Exhaust gas and warm air clouds creating ghost echoes ▪ Vehicle not on level ground or next to a gradient	▪ Ensure the sensors are a tight fit in the holder and locked. Ensure the sensors are central in the holder and bumper and at the correct angle ▪ Ensure vehicle ride height is within the specified limits. Rectify as required ▪ Clean the sensor face as required. Defrost the sensor and dry as required. Clear any debris from the sensor and holder as required. Water flowing over the sensor is a system limitation. (no action required) ▪ Check for non standard, bumper, exhausts/tailpipe, tow bar or external spare wheel mounting that may be

SYMPTOM	POSSIBLE CAUSES	ACTION
	▪ Parking aid sensors painted without being removed from the bumper assembly or not painted to the manufacturer specification	being detected by the parking aid system. Rectify as required ▪ Ensure the area around the vehicle is clear of any obstacles, move the vehicle to a suitable area before continuing diagnosis ▪ Ensure no exhaust gas or warm area clouds are in the area around the parking aid sensor detection range ▪ Ensure the vehicle is on level ground and clear of any ramps, potholes or speed bumps, move the vehicle to a suitable area before continuing diagnosis ▪ Remove parking aid sensor and ensure correctly painted parking aid sensor is installed ▪ Parking aid sensors that are painted incorrectly and not to the manufacturer standards, will not be considered in

SYMPTOM	POSSIBLE CAUSES	ACTION
		any warranty claim
Parking aid sensors are being returned with no faults found or signs of water ingress/corrosion	Possible issue with sensor connectors not latched correctly	▪ When either no/intermittent operation has been reported the following action should be taken ▪ 1. Using Datalogger, identify the position of the suspect parking aid sensor within the bumper ▪ 2. Visually locate the position of the suspect parking aid sensor. Inspect and provide details in claim if the sensor has any sign of physical damage ▪ 3. Remove the bumper. Disconnect the wiring at the main harness connector. Inspect the main harness connectors and terminals for signs of damage, backed out pins, corrosion and water ingress, or damage to the seals. Provide details in claim if any of the above symptoms are present

SYMPTOM	POSSIBLE CAUSES	ACTION
		▪ 4. Attempt to remove the harness connector from the suspect parking aid sensor without using the connector latch i.e. lightly pull back on **ALL** wires together, ensuring the harness is held close to the back of the connector, not elsewhere on the wiring harness. **DO NOT** apply excessive force. If the connector can be removed without using the latch, provide details in claim if connector is loose. If the connector is fully latched, disconnect it from the sensor ▪ 5. Inspect and provide details in claim if the suspect sensor harness connector has any sign of water ingress/corrosion ▪ 6. Inspect and provide details in claim if the suspect parking aid sensor harness connector shows any sign that the terminals have backed-out of the

SYMPTOM	POSSIBLE CAUSES	ACTION
		connector or for any damage to the terminal seals. Replace/repair the harness as required and proceed ▪ 7. Remove the suspect parking aid sensor from the bumper. Inspect the parking aid sensor connector for signs of water ingress/corrosion. Provide details in claim if corrosion/water ingress is present ▪ 8. Exchange the suspect parking aid sensor with another parking aid sensor within the bumper that is performing correctly. Reconnect all sensors and reconnect the bumper main harness connector. Repeat step 1. Confirm if the original fault now appears at the new position of the suspect parking aid sensor, if so, proceed to step 10 ▪ 9. If not, carry out the appropriate open circuit and

SYMPTOM	POSSIBLE CAUSES	ACTION
		short circuit checks between the original suspect parking aid sensor harness connector and the parking aid control module ▪ 10. Refit the parking aid sensors to their original position in the bumper ▪ 11. Reconnect the parking aid sensor to the bumper harness connector. Reconnect main harness connector and refit the bumper ▪ 12. Repeat Step 1. If fault is still present, **replace only the faulty sensor**

PINPOINT TEST A : PARKING AID SYSTEM NOT FUNCTIONING CORRECTLY WITH NO DTCS LOGGED	
TEST CONDITIONS	DETAILS/RESULTS/ACTIONS
A1: PERMANENT FAULT	
	1 When the parking aid system is activated, there is a vibration on the parking aid sensor membrane. This can be verified by touching the parking aid sensor face with a hard item such as a pencil, ball-pen, small screwdriver, or fingernail. **Ensure no damage is caused to sensor painted surface**
	Are the parking aid sensor(s) vibrating? **Yes** GO to A2.

PINPOINT TEST A : PARKING AID SYSTEM NOT FUNCTIONING CORRECTLY WITH NO DTCS LOGGED	
	No GO to A5.
A2: SENSORS VIBRATING WITH PARKING AID FAULT	
	1 Clean the parking aid sensor face
	Parking aid system functioning correctly? **Yes** No further action required **No** GO to A3.
A3: SENSORS VIBRATING WITH PARKING AID FAULT	
	1 Check parking aid sensors correctly mounted. Parking aid sensor holder correctly mounted. Parking aid sensor decoupler ring fitted or fitted correctly. Parking aid sensor positioning correct. Parking aid sensor painted without being removed from the bumper assembly or not painted to manufacturer specification. Rectify as required
	Parking aid system functioning correctly? **Yes** No further action required **No** GO to A4.
A4: SENSORS VIBRATING WITH PARKING AID FAULT	
	1 Carry out speaker test. Only applicable to vehicles with rear hard wired parking aid speakers. Check the parking aid speaker wiring circuit and connector. Rectify as required. Check and install a new parking aid speaker as required. Vehicles with audio parking aid system. Confirm audio system is functioning correctly. Refer to the relevant section of the workshop manual
	Parking aid system functioning correctly **Yes** No further action required
A5: SENSORS NOT VIBRATING WITH PARKING AID FAULT	
	1 Isolate the fault to front or rear parking aid sensors
	Are all rear parking aid sensors vibrating? **Yes** GO to A6. **No** GO to A10.

PINPOINT TEST A : PARKING AID SYSTEM NOT FUNCTIONING CORRECTLY WITH NO DTCS LOGGED	
A6: FRONT SENSORS NOT VIBRATING WITH PARKING AID FAULT	
	1 Check the parking aid control module is correctly configured. Check and update the car configuration file as required
	Parking aid system functioning correctly? **Yes** No further action required **No** GO to A7.
A7: FRONT SENSORS NOT VIBRATING WITH PARKING AID FAULT	
	1 Check the correct parking aid control module is installed to the vehicle
	Parking aid system functioning correctly? **Yes** No further action required **No** GO to A8.
A8: FRONT SENSORS NOT VIBRATING WITH PARKING AID FAULT	
	1 If all 4 front parking aid sensors are not vibrating, carry out harness test on common ground, power supply. Check main parking aid harness connector to bumper harness connector. Rectify as required
	Parking aid system functioning correctly? **Yes** No further action required **No** GO to A9.
A9: FRONT SENSORS NOT VIBRATING WITH PARKING AID FAULT	
	1 Check and install a new parking aid control module as required. Refer to the warranty policy and procedures manual, or determine if any prior approval programme is in operation, prior to the installation of a new module/component
	Parking aid system functioning correctly **Yes** No further action required
A10: REAR SENSORS NOT VIBRATING WITH PARKING AID FAULT	
	1

PINPOINT TEST A : PARKING AID SYSTEM NOT FUNCTIONING CORRECTLY WITH NO DTCS LOGGED	
	Check the parking aid control module is correctly configured. Check and update the car configuration file as required
	Parking aid system functioning correctly? **Yes** No further action required **No** GO to A11.
A11: REAR SENSORS NOT VIBRATING WITH PARKING AID FAULT	
	1 If all 4 rear parking aid sensors are not vibrating, carry out harness test on common ground, power supply. Check main parking aid harness connector to bumper harness connector. Rectify as required
	Parking aid system functioning correctly **Yes** No further action required **No** GO to A12.
A12: REAR SENSORS NOT VIBRATING WITH PARKING AID FAULT	
	1 Check and install a new parking aid control module as required. Refer to the warranty policy and procedures manual, or determine if any prior approval programme is in operation, prior to the installation of a new module/component
	Parking aid system functioning correctly **Yes** No further action required

PINPOINT TEST B : PARKING AID SYSTEM NOT FUNCTIONING CORRECTLY WITH NO DTCS LOGGED	
TEST CONDITIONS	DETAILS/RESULTS/ACTIONS
B1: PARKING AID SYSTEM GIVES WARNING SIGNAL WITHOUT OBSTACLE	
	1 Clean the parking aid sensor face. Check for any damage to the parking aid sensor face. Rectify as required. Snow, water or ice on sensor face. Parking aid sensor face has been repainted to the incorrect thickness. Rectify as required

PINPOINT TEST B : PARKING AID SYSTEM NOT FUNCTIONING CORRECTLY WITH NO DTCS LOGGED	
	Parking aid system functioning correctly? **Yes** No further action required **No** GO to B2.
B2: PARKING AID SYSTEM GIVES WARNING SIGNAL WITHOUT OBSTACLE	
	1 Ensure the vehicle ride height is within manufacturer specified limits. Rectify as required
	Parking aid system functioning correctly? **Yes** No further action required **No** GO to B3.
B3: PARKING AID SYSTEM GIVES WARNING SIGNAL WITHOUT OBSTACLE	
	1 Check for any non standard accessories are not fitted, such as tow bar, bike rack, body kit, modified exhaust, lighting or licence plate holder
	Parking aid system functioning correctly? **Yes** No further action required **No** GO to B4.
B4: PARKING AID SYSTEM GIVES WARNING SIGNAL WITHOUT OBSTACLE	
	1 Limitations or characteristics of the parking aid system such as vehicle on a gradient, exhaust gas vapour, signal reflection
	Parking aid system functioning correctly? **Yes** No further action required **No** For a detailed description of the parking aid system, refer to the relevant description and operation section in the workshop manual. REFER to: **Parking Aid** (413-13 Parking Aid, Description and Operation).

DTC Index

For a list of diagnostic trouble codes that could be logged on this vehicle, please refer to Section 100-00.

REFER to: Diagnostic Trouble Code (DTC) Index - DTC: Module Name: Parking Aid Module (100-00 General Information, Description and Operation).

BATTERY AND CHARGING SYSTEM – GENERAL INFORMATION

SPECIFICATIONS

Battery

ENGINE VARINATS	ITEM	SPECIFICATIONS
Vehicles with 5.0L engine	Type	Flooded Lead Calcium
	Capacity	90 **Ah**
	Cold cranking amps to the rest of the world	800 **CCA**
	Cold cranking amps to Norway, Finland, Sweden, Russia, Canada	950 **CCA**
	Reserve capacity	150 minutes
Vehicles with 4.4L TdV8 engine	Type	Flooded Lead Calcium
	Capacity	90 **Ah**
	Cold cranking amps	950 **CCA**
	Reserve capacity	150 minutes
Vehicles with 3.6L TdV8 engine	Type	Low maintenance Lead-Silver-Calcium
	Capacity	90 **Ah**
	Cold cranking amps	950 **CCA**

ENGINE VARINATS	ITEM	SPECIFICATIONS
	Reserve capacity	150 minutes

Battery Disconnect/Connect

CAUTIONS:

- The vehicle status and battery condition must be established before attempting battery disconnect/connect. Reference must then be made to the following table to establish the relevant procedure to be followed.
- After connecting the battery, the steering wheel must be turned to full left-hand and full right-hand lock with the engine running. This allows the dynamic stability control system to calibrate the steering wheel position. Failure to follow this instruction will result in a variety of instrument cluster warning lights being illuminated.

NOTES:

- If there is insufficient capacity in the battery to disarm the alarm, the alarm may sound on connection of the battery - turning the ignition key to position II will disarm the alarm.
- If a new battery is installed, the battery monitoring system (BMS) must be reset using Land Rover approved diagnostic equipment.

Vehicle status	**Battery charged**	**Battery discharged**
-	**Procedure**	**Procedure**
Engine running	1	-

Vehicle powered down, locked and alarmed	2	3
Vehicle unlocked	4	5

Procedure 1

Disconnect the battery	Connect the battery
1. If possible, apply the parking brake or chock the wheels	**1.** Make sure that all the electrical systems and ignition are switched **OFF**
2. Set the ignition to the **OFF** position.	**2.** Connect the battery **GROUND** cable
3. Wait 2 minutes for the engine management system to **POWER DOWN**	**3.** Reset electric window one-touch facility. Power window up to hard stop, release switch, reapply and hold for 1 second (relay in door will click). One touch should now work
4. Open the hood	-
5. Disconnect the battery **GROUND** cable	-

Procedure 2

Disconnect the battery	Connect the battery
1. Unlock the vehicle and disarm the alarm using the **UNLOCK** button on the key fob	**1.** Make sure that all the electrical systems and ignition are switched **OFF**
2. Enter the vehicle, set the ignition to the **ON** position, apply the parking brake or chock the wheels and then set the ignition to the **OFF** position.	**2.** Connect the battery **GROUND** cable
3. Wait 2 minutes for the engine management system to **POWER DOWN**	**3.** Reset electric window one-touch facility. Power window up to hard stop, release switch, reapply and hold for 1 second (relay in door will click). One touch should now work
4. Open the hood	-
	-

5. Disconnect the battery **GROUND** cable	

Procedure 3

Disconnect the battery	Connect the battery
1. Unlock the vehicle from the driver's door using the key	**1.** Make sure that all the electrical systems and ignition are switched **OFF**
2. Enter the vehicle, apply the parking brake or chock the wheels	**2.** Connect the battery **GROUND** cable
3. Open the hood	**3.** Set the ignition to the **ON** position.
4. Disconnect the battery **GROUND** cable	**4.** Reset electric window one-touch facility. Power window up to hard stop, release switch, reapply and hold for 1 second (relay in door will click). One touch should now work

Procedure 4

Disconnect the battery	Connect the battery
1. Enter the vehicle, set the ignition to the **ON** position, apply the parking brake or chock the wheels and then set the ignition to the **OFF** position.	**1.** Make sure that all the electrical systems and ignition are switched **OFF**
2. Wait 2 minutes for the engine management system to **POWER DOWN**	**2.** Connect the battery **GROUND** cable
3. Open the hood	**3.** Reset electric window one-touch facility. Power window up to hard stop, release switch, reapply and hold for 1 second (relay in door will click). One touch should now work
4. Disconnect the battery **GROUND** cable	-

Procedure 5

Disconnect the battery	Connect the battery
1. Enter the vehicle, apply the parking brake or chock the wheels	**1.** Make sure that all the electrical systems and ignition are switched **OFF**
2. Open the hood	**2.** Connect the battery **GROUND** cable
3. Disconnect the battery **GROUND** cable	**3.** Set the ignition to the **ON**position.
	4. Reset electric window one-touch facility. Power window up to hard stop, release switch, reapply and hold for 1 second (relay in door will click). One touch should now work

Vehicle Jump (Emergency) Starting - Using Another Vehicle

WARNINGS:

- Take care when working near rotating parts of the engine.
- Prior to attempting to start the disabled vehicle, make sure that the parking brake is applied or suitably chock the wheels. Make sure that 'P' - PARK - Automatic Gearbox or NEUTRAL - Manual Gearbox is selected.
- Suitable eye protection must be worn when working in the vicinity of the battery.
- DO NOT attempt to start the disabled vehicle if it is suspected that the electrolyte in the battery is frozen.
- During normal use, batteries emit explosive hydrogen gas sufficient to cause severe explosions and capable of causing serious injury - keep sparks and naked lights away from the engine compartment.

CAUTIONS:

- Make sure that there is no physical contact between the donor and disabled vehicles other than the booster cables.
- Make sure that the slave battery/starting aid is of the 12 volt type.
- Make sure that all electrical systems and ignition are switched OFF prior to connecting the booster cables.
- Disconnect the booster cables prior to operating any electrical systems.

CARRY OUT THE FOLLOWING OPERATIONS IN THE SEQUENCE GIVEN
1. Connect one end of the RED (+) booster cable to the POSITIVE (+) battery terminal of the **DONOR** vehicle
2. Connect the other end of the RED (+) booster cable to the POSITIVE (+) battery terminal of the **DISABLED** vehicle
3. Connect one end of the BLACK (-) booster cable to the GROUND (-) battery terminal of the **DONOR** vehicle
4. Connect the other end of the BLACK (-) booster cable to a good earth point e.g. unpainted metal surface or engine mounting at least 0.5 m (19.7 in) from the battery or fuel lines on the **DISABLED** vehicle
5. Start the engine of the **DONOR** vehicle and allow it to idle for a few minutes
6. Start the engine of the **DISABLED** vehicle
7. Allow the engines of both vehicles to idle for a few minutes, then switch off the engine of the **DONOR** vehicle
8. Disconnect the BLACK (-) booster cable from the earth point of the **PREVIOUSLY DISABLED** vehicle
9. Disconnect the BLACK (-) booster cable from the battery of the **DONOR** vehicle
10. Disconnect the RED (+) booster cable from the **PREVIOUSLY DISABLED** vehicle
11. Disconnect the RED (+) booster cable from the battery of the **DONOR** vehicle

Vehicle Jump (Emergency) Starting - Using a Slave Battery/Starting Aid

CARRY OUT THE FOLLOWING OPERATIONS IN THE SEQUENCE GIVEN
1. Connect the end of the RED (+) booster cable to the POSITIVE (+) battery terminal of the vehicle
2. Connect the end of the BLACK (-) booster cable to the GROUND (-) battery terminal of the vehicle
3. Start the engine of the vehicle and allow it to idle
4. Disconnect the BLACK (-) booster cable from the battery terminal of the vehicle
5. Disconnect the RED (+) booster cable from the battery terminal of the vehicle

2012.0 RANGE ROVER (LM), 414-00

BATTERY AND CHARGING SYSTEM – GENERAL INFORMATION

DESCRIPTION AND OPERATION

NOTE:

Fields marked with * are mandatory and must be completed.

GENERAL INFORMATION

*Vehicle Identification Number (VIN):	Vehicle Model:	Engine type:		
*Mileage:	*Repair Date:	-		
Customer Questions				
*1: What is the customer's reason for dealer visit? (tick symptoms as appropriate)	Non crank	Crank but non start	Warning message	Other:
*2: How long was the vehicle left prior to issue.	*			
*3: How was the car left (Locked/unlocked)	*			
*4: How did you access to the vehicle		Key fob	Manual key	Handle pull
*5: Has the vehicle required assistance for battery issues previously?			Yes	No

GENERAL INFORMATION							
*6: Is the vehicle used? (tick symptoms as appropriate)				Daily	Every other day	Weekly	Less than weekly
*7: Average journey length				*			
*8: How many starts do you typically do in a day				*			
*9: Did the customer see any instrument pack warnings prior to the issue?				*			
*10: Have any of the features been used without the engine running in the last 3 days (if fitted?)	Radio	Power point accessory	CD	DVD	USB or IPOD connection	TV	Rear seat entertainme
11: Customer comments:- Please add any additional comments that are relevant.				*			
Diagnostics (Battery Testing)				-	-	-	-
1: Loose battery clamps				Yes	*	No	*
2: Loose hold down clamps				Yes	*	No	*
3: Corroded terminal posts				Yes	*	No	*
4: Physical damage/leaks				Yes		No	*
5: Low electrolyte (Flooded batteries only)				Yes	*	No	*
6: Battery Date Code				*			
7: FEAD belt tension				OK	*	Not OK	*
8: Quiescent Drain				mA	*		
9: Vent tube correctly installed				Yes	*	No	*
10: Number of Times Battery Charged:				*			
11: Remove the Surface (414-00 battery care requirements)				Yes	*	No	*
12: Battery voltage				*			
13: Midtronics test code before charging (EXP-1080)				*			

GENERAL INFORMATION	
13a: If Midtronics indicates that the battery needs re-charging, charge the battery following instructions on the recommended battery charger	*
13b: Midtronics test code after charge	*
13c: Midtronics test code result after charge	*
13d: If "good and re-charge" charge the battery following instructions on the recommended battery charger	*
13e: If "charge and re-test" for both before and after the charge renew the battery	*
13f: Only renew the battery if "renew battery", "bad cell" or charge and re-test has been displayed twice.	*
Technician Comments:- Please add any additional comments that are relevant.	
*	
*	
*	
*	
*	

BATTERY AND CHARGING SYSTEM – GENERAL INFORMATION

DESCRIPTION AND OPERATION

VEHICLE QUIESCENT CURRENT TESTING

On vehicles fitted with a Battery Monitoring System (BMS), the diagnostic routine for quiescent drain testing in the approved Jaguar or Land Rover diagnostic system should be utilized.

If a customer complains of a vehicle battery that discharges continuously or when left for a prolonged period of time, it is recommended that a quiescent drain test is performed as described below.

The battery drain should be measured using the approved Jaguar or Land Rover diagnostic system or a Digital Volt Ohm Meter (DVOM). A procedure for quiescent drain measurement using the diagnostic system is available in the Diagnosis and Testing section of the Workshop Manual. The vehicle should be in the locked/armed state (for example vehicle alarm fully armed), all doors, hood and luggage compartment lid/tailgate are open and latched (so as to appear closed from an electrical point of view). The test should take place after the vehicle has entered shutdown mode. The time taken for this

to occur after the ignition is switched off varies according to model (Refer to the Topix On line resource for details).

When the vehicle is armed, the effect of the security system Light Emitting Diode (LED) flashing is to cause a pulsation in the measured current drain. In this case, either the average current should be taken (using a DVOM with an averaging system) or the current reading taken, ignoring the brief high current peaks.

EQUIPMENT

Approved Jaguar or Land Rover diagnostic system with current probe **OR** DVOM with current probe.

METHOD OF MEASUREMENT

Using an Approved Jaguar or Land Rover Diagnostic System.

1. Switch off all electrical loads and ensure that the ignition is off (power mode 0)
2. Connect the current probe to the approved Jaguar or Land Rover diagnostic system
3. Calibrate the probe
4. Install a clamp around the battery lead/junction box lead
5. Go to the Quiescent Current Testing section in this procedure

Using a Digital Volt Ohm Meter (DVOM)

Do not use an in-line DVOM to measure the quiescent drain on vehicles fitted with an electronic throttle (for example Range Rover 2002MY onwards). The current exceeds the maximum amount the fuse in the DVOM is capable of handling.

1. Switch off all electrical loads and ensure that the ignition is off (power mode 0)

2 Connect the current probe to the DVOM

3 Calibrate the probe

4 Install a clamp around the battery lead/junction box lead

5 Go to the Quiescent Current Testing section in this procedure

QUIESCENT CURRENT TESTING

1 Switch ignition to 'on' or select ignition power mode 6 in keyless vehicles and switch to 'off' (power mode 0) (do not crank)

2 Remove key from ignition switch (if equipped)

3 Open and latch all doors, hood and luggage compartment lid or tailgate

4 Lock the vehicle using the remote function on the remote handset or smart key. (Single lock only to avoid volumetric alarm arming)

5 Remove any other potential electrical drains such as accessories plugged into accessory sockets

6 Record the amperage readings after the shutdown period referenced in the Topix on line resource for details. Note: all cars from 10MY onwards should be less than 30mA after 30 minutes (for exceptions see Land Rover Quiescent Drain Values table).

7 Record the final reading on the battery report form.

The preferred method of testing following an excessive current consumption figure is to use a current probe around individual junction box leads to the various suspected circuits to identify a potential cause. This is in preference to the old method of removing fuses for the following reasons:

- The drain may be caused by a control module remaining active and preventing the quiescent drain from reducing to normal levels
- The drain may be caused by a relay winding that is activated. Pulling the fuse can allow this to 'reset' and the drain will be lost and go un-diagnosed.

LAND ROVER QUIESCENT DRAIN VALUES

MODEL	SHUT DOWN PERIOD (MINUTES)	TYPICAL VALUES BATTERY DRAIN (MA)
Range Rover (LM) - Up to 2009MY	30	<30
Range Rover (LM) - From 2010MY	20 (after lock/arm condition) [2]	<30
	33 (unlocked)	<30
Range Rover (LG) From 2013MY	<10 (after lock/arm condition) [2]	<20
	<20 (unlocked)	<20
Range Rover Sport (LS) - Up to 2007MY	30	<30
Range Rover Sport (LS) - From 2007MY to 2010MY	30	<30
	33 (unlocked)	<30
Range Rover Sport (LS) - From 2010MY	10 (after lock/arm condition) [2]	<20
	30 (unlocked)	<20
Range Rover Sport (LW) - From 2014MY	10 (after lock/arm condition) [2]	<20
	<20 (unlocked)	<20
Range Rover Evoque (LV) - From 2012MY	20 (after lock and arm condition) [2]	<20
	<20 (unlocked)	<20

MODEL	SHUT DOWN PERIOD (MINUTES)	TYPICAL VALUES BATTERY DRAIN (MA)
Discovery Series 2 (LT)	30	<30
Discovery 3/LR3 (LA) - Up to 2007MY	30	<30
Discovery 3/LR3 (LA) - From 2007MY to 2010MY	30	<30
	33 (unlocked)	<30
Discovery 4/LR4 (LA) - From 2010MY	<20 (after lock/arm condition) [2]	<20
	<20 (unlocked)	<20
	<20 (unlocked)	<20
Discovery Sport (LC) - From 2015MY	10 (after lock/arm condition) [2]	<20
	<20 (unlocked)	<20
Freelander (LN) - Up to 2007MY	30	<30
Freelander 2/LR2 (LF) - From 2007MY	35 (single locked or unlocked)	<25
	15 (double locked)	<25
Defender (LD) - 1998MY to 2007MY	30	<25
Defender (LD) - from 2007MY	<30	<30

NOTE:

1. The total current drain will be higher if certain approved accessories are fitted (for example: tracker, trailer module, etc.)
2. Applies to vehicles without Tire Pressure Monitoring System (TPMS). Vehicle shut-down period with TPMS is approximately 15 minutes.

BATTERY SUPPORT UNIT CONNECTION PROCEDURE

(G1917304)

GENERAL PROCEDURES

CONNECT

WARNINGS:

- Do not smoke or carry lighted tobacco or open flame of any type when working on or near the vehicles battery. Highly flammable vapors may be present and ignite. Failure to follow these instructions may result in personal injury.
- Avoid flames, sparks or lighted substances.
- Make sure that the battery is well ventilated while the battery support unit is connected.
- Switch off the current from the battery support unit before making any electrical connections or disconnections.
- The battery support unit must **never** be connected to both battery terminals. Always follow the safety warnings and documentation of the device that is being used.
- The battery support unit ground cable must **always** be connected to the vehicle last and disconnected first.

CAUTION:

Do not carry out any software downloads with the vehicle in transit mode or with the transit relay installed.

NOTES:

- This procedure covers connection instructions for the following vehicles;
-
  - LG / L405
  - LW / L494
  - LF / L359
  - LA / L319
  - LS / L320
  - LM / L322
  - LC / L550
  - LV / L538
- This procedure covers operating instructions for the following battery support units;
-
  - Traction BSU2-50 / 125
  - Fronius ACCTIVA Professional Flash
  - MIdtronics CX-Pro 50
  - Traction MPL-50
  - Midtronics PSC 700S

1.

WARNING:

Make sure that the cables are connected in the correct order.

NOTES:

- **This Step contains connection instructions for the following vehicles;**
-
  - **LG / L405**
  - **LW / L494**

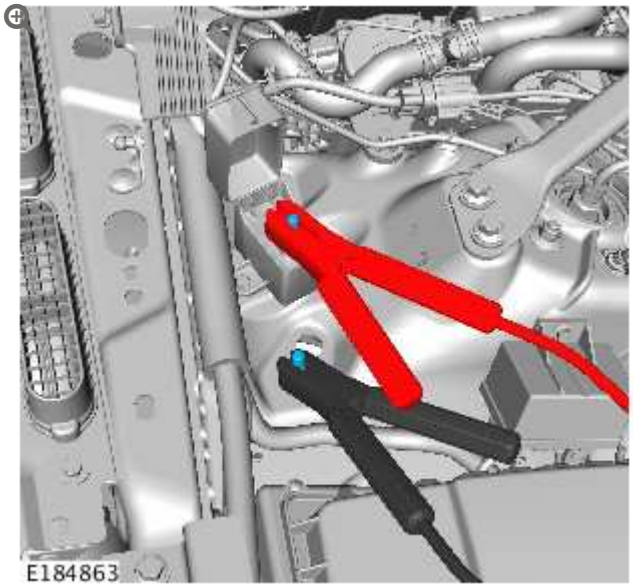

1. Connect the battery support unit positive cable to the jump start positive terminal.
2. Connect the battery support unit ground cable to the jump start ground terminal.

2.

WARNING:

Make sure that the cables are connected in the correct order.

NOTES:

- **This Step contains connection instructions for the following vehicles;**
-
  - **LC / L550**
  - **LF / L359**

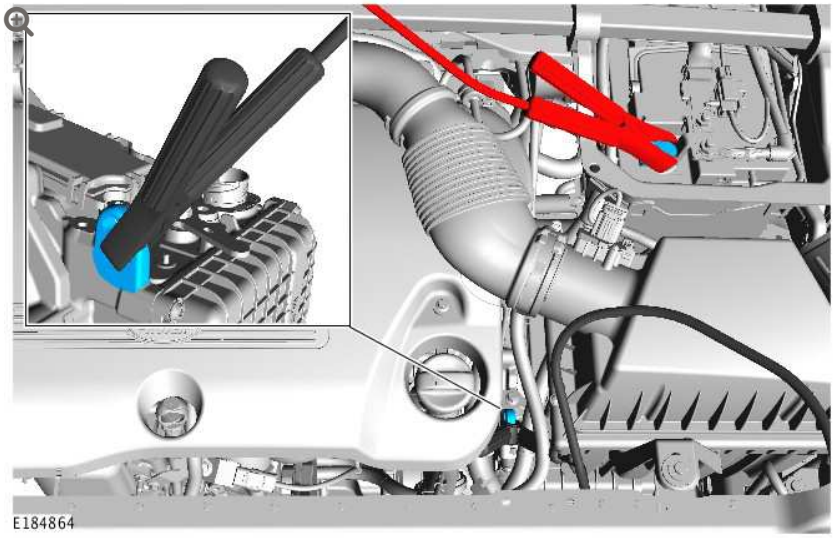

1. Connect the battery support unit positive cable to the primary battery positive terminal.
2. Connect the battery support unit ground cable to the ground point, as illustrated.

3.

WARNING:

Make sure that the cables are connected in the correct order.

CAUTION:

Do not connect the battery support unit ground cable directly to the battery ground terminal. The battery monitoring system (BMS) must be between the battery support unit ground cable clamp and the battery ground terminal.

NOTES:

- **This Step contains connection instructions for the following vehicles;**
-
    - **LA / L319**
    - **LS / L320**
- Left hand drive shown, right hand drive is similar.

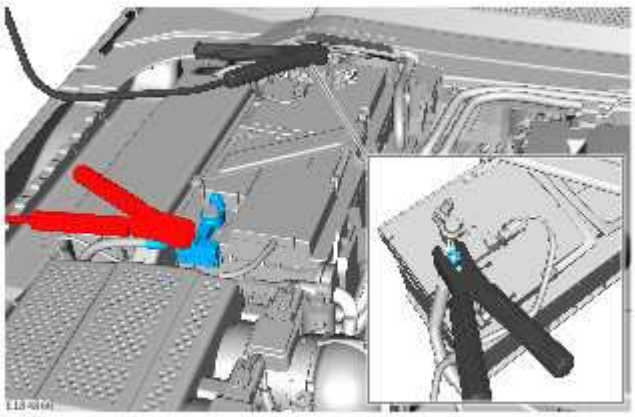

1. Connect the battery support unit positive cable to the primary battery positive terminal.

2. Connect the battery support unit ground cable to the primary battery ground cable, as illustrated.

4.

WARNING:

Make sure that the cables are connected in the correct order.

NOTES:

- **This Step contains connection instructions for the following vehicle;**
-
    - **LV / L538**

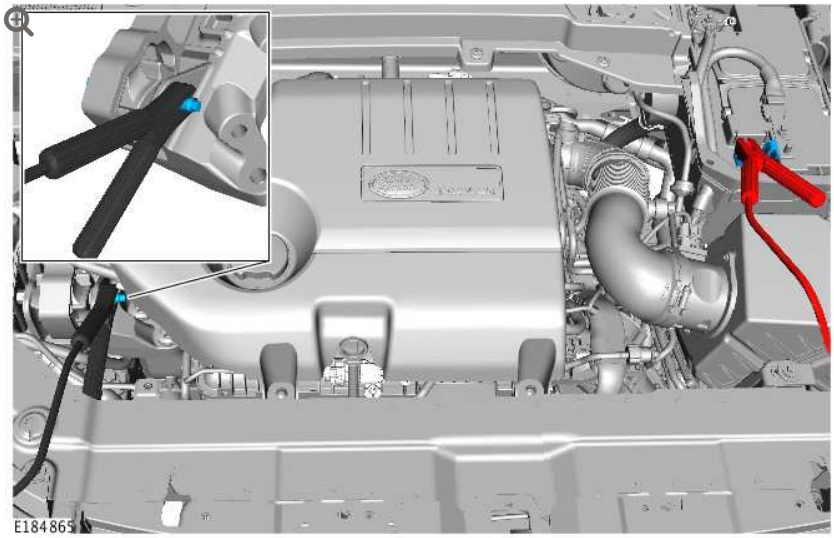

1. Connect the battery support unit positive cable to the primary battery positive terminal.
2. Connect the battery support unit ground cable to the ground point, as illustrated.

5.

WARNING:

Make sure that the cables are connected in the correct order.

CAUTION:

Do not connect the battery support unit ground cable directly to the battery ground terminal. The battery monitoring system (BMS) must be between the battery support unit ground cable clamp and the battery ground terminal.

NOTES:

- **This Step contains connection instructions for the following vehicle;**
-
    - **LM / L322**

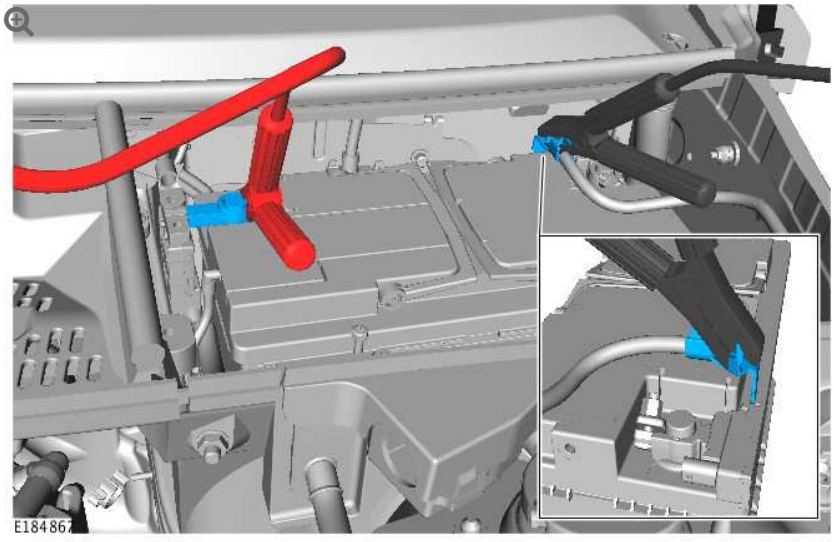

1. Connect the battery support unit positive cable to the primary battery positive terminal.
2. Connect the battery support unit ground cable to the primary battery ground cable, as illustrated.

6.

CAUTION:

The Midtronics CX-Pro 50 can only support one vehicle at a time. It should not be used to support 2 vehicles at the same time.

NOTE:

This Step contains operating instructions for the Midtronics CX-Pro 50 battery support unit.



E184700

1. Connect the vehicle link cable to port 1 on the base of the battery support unit.
2.

NOTE:

Switch off any auxiliary systems, for example: headlamps, to reduce the electrical load on the battery support unit.

Switch the ignition ON, but **do not** start the engine.

7.

NOTE:

This Step contains operating instructions for the Midtronics CX-Pro 50 battery support unit.

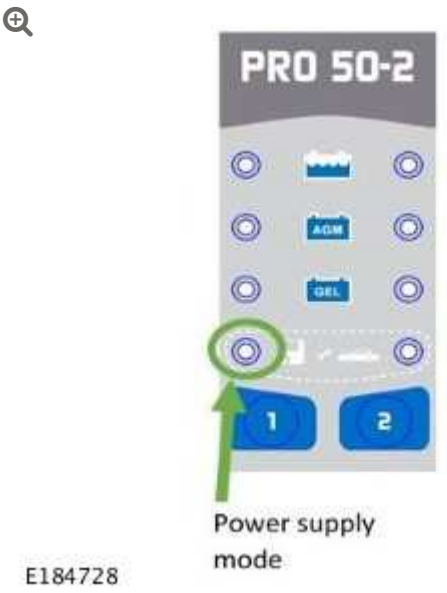

1.

NOTE:

A green light will confirm the battery support unit is switched ON

Switch ON the battery support unit.

2. **NOTE:**

> An orange light indicates that power is being supplied to the vehicle.

Use button 1 to select power supply mode.

3. The battery support unit is now ready for a diagnostic session.

8. **CAUTION:**

> The Traction Showroom Support Unit (SSU2) must not be used during diagnostic sessions. Only the Traction Battery Support Unit (BSU) / (BSU2) can be used.

NOTE:

> **This Step contains operating instructions for the Traction BSU2-50 / 125 battery support unit.**



1. **NOTE:**

   Switch off any auxiliary systems, for example: headlamps, to reduce the electrical load on the battery support unit.

   Switch the ignition ON, but **do not** start the engine.

2. **NOTE:**

   Confirm that all 3 lights are illuminated green before starting a diagnostic session.

   Switch ON the battery support unit.

3. The battery support unit is now ready for a diagnostic session.

9.

NOTE:

This Step contains operating instructions for the Fronius ACCTIVA Professional Flash battery support unit.



E184698

1. NOTE:

   Switch off any auxiliary systems, for example: headlamps, to reduce the electrical load on the battery support unit.

   Switch the ignition ON, but **do not** start the engine.

2. NOTE:

   The unit will indicate on screen that it is supplying current.

Switch ON the battery support unit and select external power supply mode (FSV / SPLY).

3. The battery support unit is now ready for a diagnostic session.

10. **NOTE:**

This Step contains operating instructions for the Traction MPL-50 battery support unit.



1.

CAUTIONS:

- The battery support unit must NOT be connected to an power supply at this stage.
- Charging mode must not be selected.

Select battery support mode.

2.

NOTES:

- If the orange CHARGE lamp is illuminated for more than a few seconds;
-
  - disconnect the battery support unit from the power supply
  - disconnect the cables from the vehicle
  - make sure the battery support mode is selected
  - reconnect the cables to the vehicle
  - reconnect the battery support unit to the power supply and confirm the green READY lamp is illuminated.

Connect the battery support unit to the power supply, the green READY lamp should now be illuminated.

3. The battery support unit is now ready for a diagnostic session.

11.

CAUTION:

The Midtronics PSC 700S is only to be used in markets with 120V power supply.

NOTE:

This Step contains operating instructions for the Midtronics PSC 700S battery support unit.



E192494

1. Connect the battery support unit to the power supply and switch the battery support unit ON.
2. The battery support unit is now ready for a diagnostic session.

2012.0 RANGE ROVER (LM), 414-00

BATTERY AND CHARGING SYSTEM – GENERAL INFORMATION

DIAGNOSIS AND TESTING

PRINCIPLE OF OPERATION

For a detailed description of the charging system and operation, refer to the relevant Description and Operation section of the workshop manual.

INSPECTION AND VERIFICATION

CAUTION:

Diagnosis by substitution from a donor vehicle is **NOT** acceptable. Substitution of control modules does not guarantee confirmation of a fault and may also cause additional faults in the vehicle being checked and/or the donor vehicle.

NOTE:

Check and rectify basic faults before beginning diagnostic routines involving pinpoint tests.

1. Verify the customer concern.
2. Visually inspect for obvious signs of mechanical or electrical damage.

Visual Inspection

MECHANICAL	ELECTRICAL
▪ Generator ▪ Drive belt ▪ Drive belt tensioner ▪ Generator pulley ▪ Check the security of the generator fittings	▪ Generator ▪ Battery/battery connections ▪ Starter motor ▪ Harnesses and connectors ▪ Fuses ▪ Starter motor megafuse ▪ Charge warning indicator function ▪ Instrument Cluster (IC) ▪ Engine Control Module (ECM)

3. If an obvious cause for an observed or reported concern is found, correct the cause (if possible) before proceeding to the next step.
4. If the cause is not visually evident, verify the symptom and refer to the Symptom Chart, alternatively check for Diagnostic Trouble Codes (DTCs) and refer to the DTC Index.

SYMPTOM CHART

SYMPTOM	POSSIBLE CAUSES	ACTION
Charge warning indicator does not illuminate (ignition on, engine not running)	▪ Instrument cluster fault ▪ Engine Control Module fault (ECM)	▪ Using the Jaguar Land Rover Approved Diagnostic Equipment, check the Instrument Cluster (IC) for related DTCs and refer to the relevant DTC index ▪ Using the Jaguar Land Rover Approved Diagnostic Equipment, check the Engine Control Module (ECM) for related DTCs and refer to the relevant DTC index
Charge warning indicator illuminates and the battery discharges (engine running)	▪ Accessory drive belt broken ▪ Generator pulley slipping on shaft ▪ Generator fault ▪ Battery cable fault ▪ LIN circuit fault ▪ Engine control module fault	▪ Check the auxiliary drive belt condition and tension ▪ Check that the pulley does not rotate independently of the generator ▪ Refer to the electrical circuit diagrams and test the generator circuit for short circuit to ground, short circuit to power, open circuit, high resistance ▪ Using the Jaguar Land Rover Approved Diagnostic Equipment, check the Engine Control Module (ECM) for related DTCs and refer to the relevant DTC index ▪ Using the Jaguar Land Rover Approved Diagnostic Equipment, check the Gateway Module (GWM) for related DTCs and refer to the relevant DTC index
Charge warning indicator illuminates	▪ Auxiliary drive belt slipping	▪ Check the auxiliary drive belt condition and tension

SYMPTOM	POSSIBLE CAUSES	ACTION
intermittently (engine running)	▪ Generator pulley slipping on shaft ▪ Battery cable fault ▪ Generator wiring fault ▪ Generator fault ▪ LIN bus circuit fault	▪ Check that the pulley does not rotate independently of the generator ▪ Refer to the electrical circuit diagrams and test the generator circuit for short circuit to ground, short circuit to power, open circuit, high resistance ▪ Using the Jaguar Land Rover Approved Diagnostic Equipment, check the Engine Control Module (ECM) for related DTCs and refer to the relevant DTC index
Battery discharges without the charge warning indicator staying on	▪ Battery fault ▪ Battery quiescent drain ▪ Intermittent generator fault	▪ Refer to the relevant section of the workshop manual and test the battery ▪ Refer to the relevant section of the workshop manual and test the battery quiescent drain ▪ Using the manufacturer approved diagnostic system, check the Engine Control Module (ECM) for related DTCs and refer to the relevant DTC index ▪ Using the Jaguar Land Rover Approved Diagnostic Equipment, check the Gateway Module (GWM) for related DTCs and refer to the relevant DTC index
Noise (mechanical)	▪ Auxiliary drive belt slipping ▪ Generator fault	▪ Check the auxiliary drive belt condition and tension ▪ Remove the auxiliary drive belt and check that the generator rotates freely

DTC INDEX

For a list of Diagnostic Trouble Codes (DTCs) that could be logged on this vehicle, please refer to Section 100-00. REFER to: (100-00 General Information)

Diagnostic Trouble Code Index - TDV8 3.6L Diesel, DTC: Engine Control Module (Description and Operation),
Diagnostic Trouble Code (DTC) Index - V8 5.0L Petrol/V8 S/C 5.0L Petrol (Description and Operation).

BATTERY, MOUNTING AND CABLES

SPECIFICATIONS

Torque Specifications

ITEM	NM	LB-FT	LB-IN
Battery clamp bolt	9	-	80
Battery terminal nut	6	-	53
Battery tray to body bolt	5	-	44
Fuel fired booster heater to battery tray nut	10	7	-

BATTERY, MOUNTING AND CABLES

DIAGNOSIS AND TESTING

PRINCIPLES OF OPERATION

For a detailed description of the battery system and operation, refer to the relevant Description and Operation section of the workshop manual REFER to: Battery and Cables (414-01 Battery, Mounting and Cables, Description and Operation).

INSPECTION AND VERIFICATION

CAUTION:

Diagnosis by substitution from a donor vehicle is **NOT** acceptable. Substitution of control modules does not guarantee confirmation of a fault and may also cause additional faults in the vehicle being checked and/or the donor vehicle.

NOTES:

- Generic scan tools may not read the codes listed, or may read only five digit codes. Match the five digits from the scan tool to the first five digits of the seven digit code listed to identify the fault (the last two digits give additional information read by the manufacturer-approved diagnostic system).
- When performing electrical voltage or resistance tests, always use a digital multimeter (DMM) accurate to three decimal places, and with an up-to-date calibration certificate. When testing resistance, always take the resistance of the DMM leads into account.
- Check and rectify basic faults before beginning diagnostic routines involving pinpoint tests.
- If DTCs are recorded and, after performing the pinpoint tests, a fault is not present, an intermittent concern may be the cause. Always check for loose connections and corroded terminals.

1. Verify the customer concern

2. Visually inspect for obvious signs of mechanical or electrical damage

Visual Inspection

MECHANICAL	ELECTRICAL
▪ Generator ▪ Drive belt ▪ Drive belt tensioner ▪ Generator pulley	▪ Generator ▪ Battery ▪ Battery connections ▪ Starter motor ▪ Harnesses and connectors

MECHANICAL	ELECTRICAL
▪ Check the security of the generator fixings	▪ Fuses ▪ Charge warning indicator function ▪ Engine Control Module (ECM)

3. If an obvious cause for an observed or reported concern is found, correct the cause (if possible) before proceeding to the next step

4. If the cause is not visually evident, check for Diagnostic Trouble Codes (DTCs) and refer to the DTC Index

5. Check DDW for open campaigns. Refer to the corresponding bulletins and SSMs which may be valid for the specific customer complaint and carry out the recommendations as required

SYMPTOM CHART

SYMPTOM	POSSIBLE CAUSES	ACTION
▪ Battery power to vehicle interrupted	▪ High resistance between battery terminals and clamps	▪ GO to Pinpoint Test A.

MIDTRONICS EXP-1080 USER GUIDE

Carry out the following: -

Surface Voltage Removal Process

A vehicle which has had its battery charged or been driven in a **24** hour period before the test, must have its surface charge removed

- 1. Turn on the ignition but do not start the vehicle
- 2. Switch the headlamps on high beam for a minimum of 3 minutes
- 3. Switch off the headlamps
- 4. Wait a minimum of 5 minutes before recording test results for any battery measurements

NOTE:

This test checks for high resistance between the battery terminal and the battery clamp.

NOTE:

This test checks for high resistance between the battery terminal and the battery clamp.

PINPOINT TEST A : VOLTAGE DROP	
TEST CONDITIONS	DETAILS/RESULTS/ACTIONS
A1: GROUND CIRCUIT	
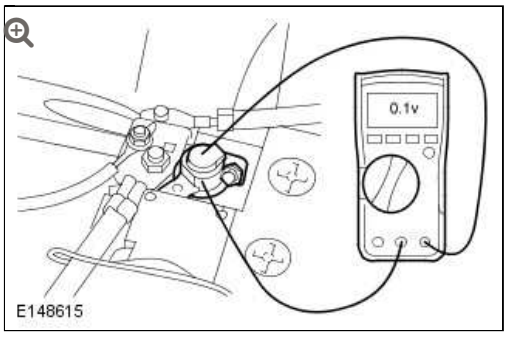	**1** Start the engine, turn on the following: ▪ (1) Air conditioning ▪ (2) Blower fan on full speed ▪ (3) Headlights on main beam ▪ (4) Heated screen - rear ▪ (5) Heated screen - front (if installed) ▪ (6) Heated seats (if installed)
	2 Connect the multimeter between the battery

PINPOINT TEST A : VOLTAGE DROP	
	negative terminal and the battery clamp as shown in picture below (do not disconnect the battery at this stage)
	3 Set the multimeter to read DC voltage and record the reading
	Is reading equal to or below 0.1 volts? **Yes** GO to A2. **No** Switch all electrical loads and engine off, return the vehicle to an ignition off condition. Disconnect the battery negative clamp, clean clamp and terminal then reconnect and repeat test GO to A1.
A2: POWER CIRCUIT	
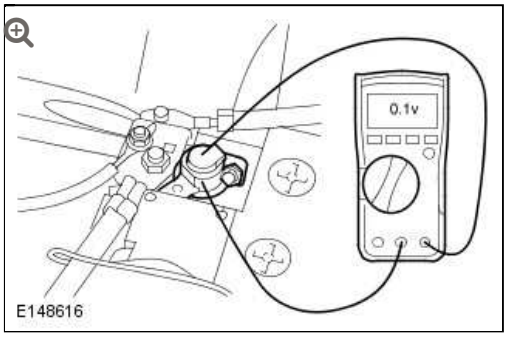	**1** Start the engine, turn on the following: ▪ (1) Air conditioning ▪ (2) Blower fan on full speed ▪ (3) Headlights on main beam ▪ (4) Heated screen - rear ▪ (5) Heated screen - front (if installed) ▪ (6) Heated seats (if installed)
	2 Connect the multimeter between the battery positive terminal and the battery clamp as shown in picture below (do not disconnect the battery at this stage)
	3

PINPOINT TEST A : VOLTAGE DROP	
	Set the multimeter to read DC voltage and record the reading
	Is reading equal to or below 0.1 volts? **Yes** Carry out midtronics battery test procedure **No** Switch all electrical loads and engine off, return the vehicle to an ignition off condition. Disconnect the battery positive clamp, clean clamp and terminal then reconnect and repeat test **GO to A2**.

The following steps must be carried out to ensure correct operation of the EXP-1080 battery tester during the battery test procedure

CHECKS	ACTION
Battery fluid leakage, check for battery fluid leaks or damage to the battery casing	**NOTE:** If visible damage to the case is evident do not return battery under warranty. Replace the battery if there is any battery fluid leaks evident
Battery vent pipe routing	Check for routing, ensure there are no kinks
EXP-1080 fly lead, condition of clamps	Clean or replace as required
EXP-1080 fly lead connection	Confirm secure connection

NOTE:

The Midtronics EXP-1080 battery tester is suitable for testing flooded and absorbed glass mat (AGM) type batteries including Primary and Secondary batteries.

Testing a Battery

Using the Midtronics EXP-1080 battery tester, the following test procedure will confirm the serviceability of the battery (see Completing a Battery Test)

Battery Label Example

NOTE:

All AGM batteries are marked with AGM. Flooded batteries have no reference to being Flooded.

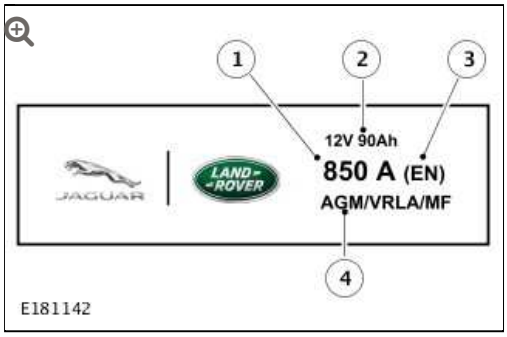

- 1. Battery Rating Units CCA (Cold Cranking Amps)
- 2. Battery voltage and Battery Ah rating
- 3. Battery rated units (battery standard EN or SAE)
- 4. Battery type (battery technology, AGM or Flooded)

Battery Test Types

The Midtronics EXP-1080 battery tester has three types of Battery Test avaliable to the technician to select:

Battery Test

- 1.The BATTERY TEST should be used on any battery that has started its warranty life cycle. The battery is in use and fitted to a vehicle registered to an owner

PDI / Storage

- 2.The PDI / STORAGE test should be used on any battery that has not yet been entered into the warranty life cycle. The battery is fitted to a NEW vehicle, but the vehicle has not yet been sold/registered to an owner

Battery Storage

- 3. This BATT. STORAGE test should be used on any battery that has not yet been entered into the warranty life cycle. The battery is not in use and is a Parts Stock battery and has not yet been fitted to a vehicle

Completing a Battery Test

1	Connect the fly-lead to the Midtronics EXP-1080 battery tester	
2	Connect the fly-leads to the battery terminals, black lead to the negative terminal, red lead to the positive terminal and confirm the connections are secure	
3	The battery tester will power ON automatically when connected to a battery	
4	MAIN MENU	

- Select the correct BATTERY TEST using the arrow keys on the battery tester panel (see Battery Test Types)
- 1. BATTERY TEST
- 2. PDI / STORAGE
- 3. BATT. STORAGE

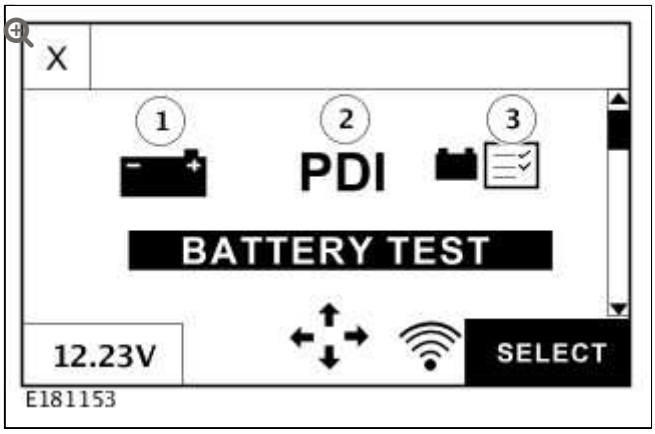

NOTE:

When BATT. STORAGE is selected, the technician must enter IDENTIFICATION data or a purchase order reference number for the battery being tested. The battery tester will then move on to BATTERY TYPE (Step 8).

Select NEXT to continue

5	BRAND SELECTION **NOTE:** This step is required for BATTERY TEST and PDI/STORAGE only. Select the correct brand of the vehicle battery	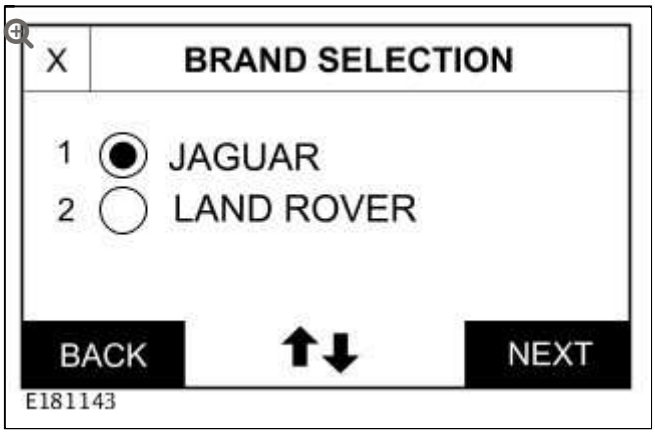

	being tested using the scroll arrow keys on the battery tester panel	
	Select NEXT to continue	
6	VIN	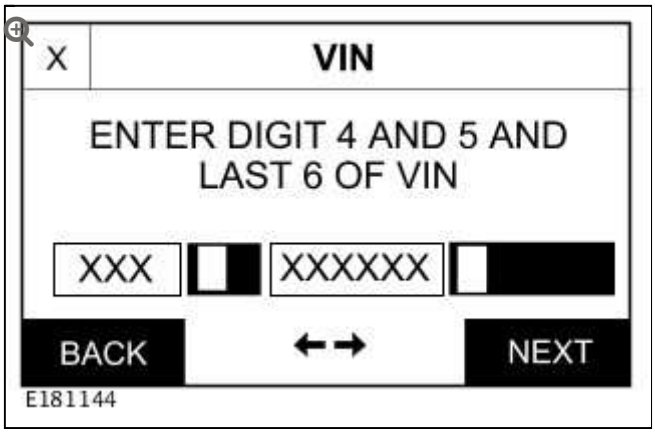
	NOTES: ▪ This step is required for BATTERY TEST and PDI/STORAGE only. ▪ Letters SAL or SAJ may be different than displayed on the EXP-1080 if the vehicle is manufactured outside the United Kingdom, this will not effect the battery testing. Enter the 4th and 5th digit followed by the last 6 of the VIN using the alphanumeric key pad on the battery tester panel	
	Select NEXT to continue	
7	BATTERY LOCATION	

	NOTES: ▪ This step is required for BATTERY TEST and PDI/STORAGE only. ▪ Selecting the correct battery details at this point is critical to getting the correct Battery Test Results. Select IN VEHICLE if the battery is tested connected to the vehicle	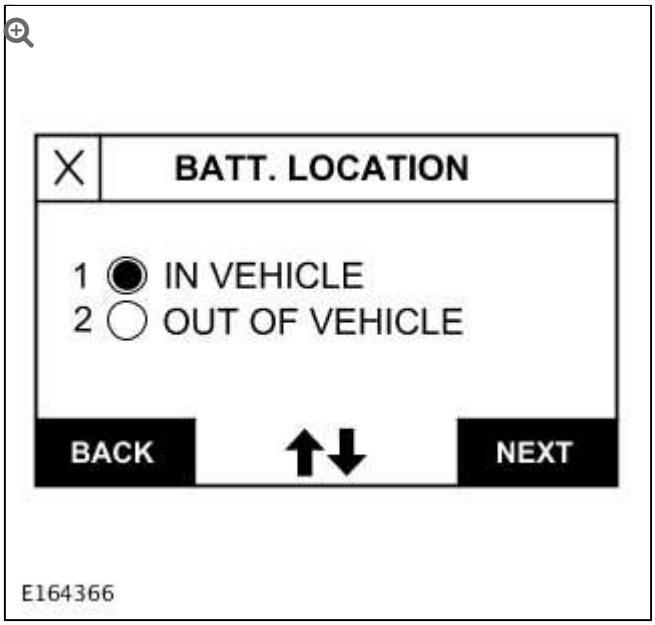
	NOTE: Make sure the Ignition is OFF and the vehicle is powered down with the modules entering 'sleep mode' before commencing with the battery test. Select OUT OF VEHICLE only if the battery is out of the vehicle on a bench	
	Select NEXT to continue	
8	BATTERY TYPE	

NOTES:

- All AGM batteries are marked with AGM. Flooded batteries have no reference to being Flooded.
- Selecting the correct battery details at this point is critical to getting the correct Battery Test Results.

Select the correct battery type (see Battery Label Example, Label 4) using the scroll arrow keys on the battery tester panel

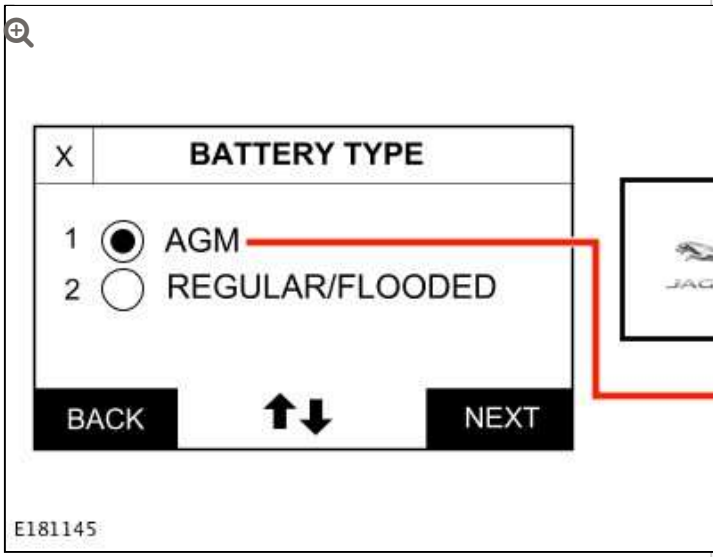

Select NEXT to continue

9 RATING UNITS

NOTE:

Selecting the correct battery details at this point is critical to getting accurate Battery Test Results.

Select the correct battery rating from the battery label in brackets (see Battery Label Example, Label 3) using the scroll arrow keys on the battery tester panel

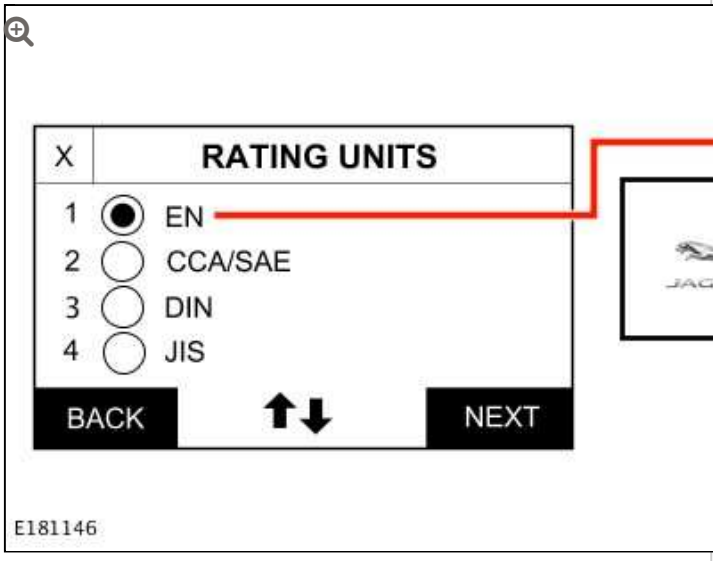

	Select NEXT to continue	
10	BATTERY RATING	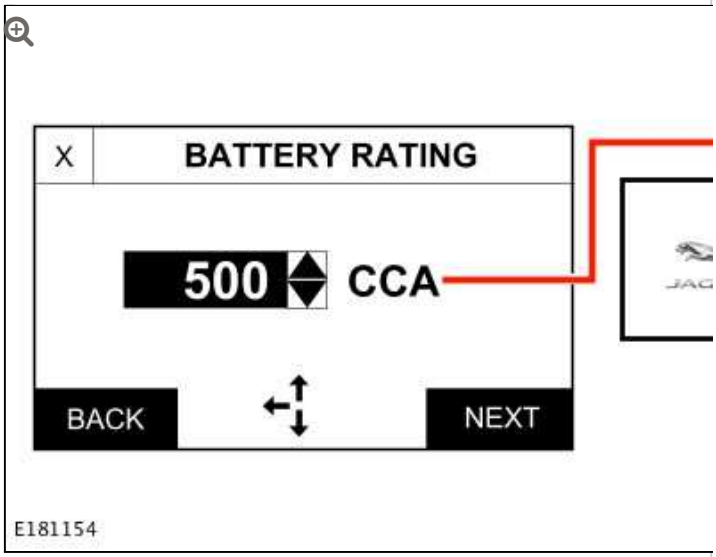
	NOTE: Selecting the correct battery details at this point is critical to getting accurate Battery Test Results.	
	Select the correct CCA rating (see Battery Label Example, Label 1) using the scroll arrow keys, or enter the rating with the numeric key pad on the battery tester panel	
	Select NEXT to continue	
11	TEMPERATURE	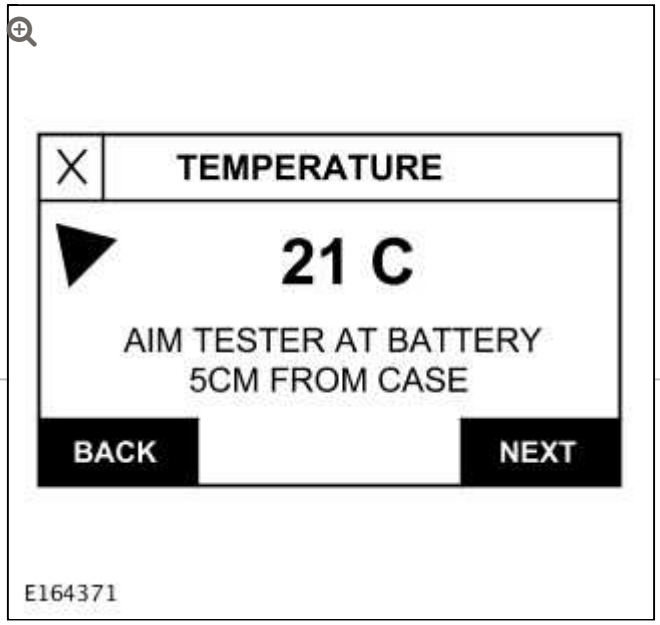
	Aim the temperature sensor towards the battery casing (maintain distance of 5 cm)	
	Select NEXT to continue	
12	TESTING	
	The battery tester screen will now display clock hands rotating, the battery tester will automatically advance when the test has completed	

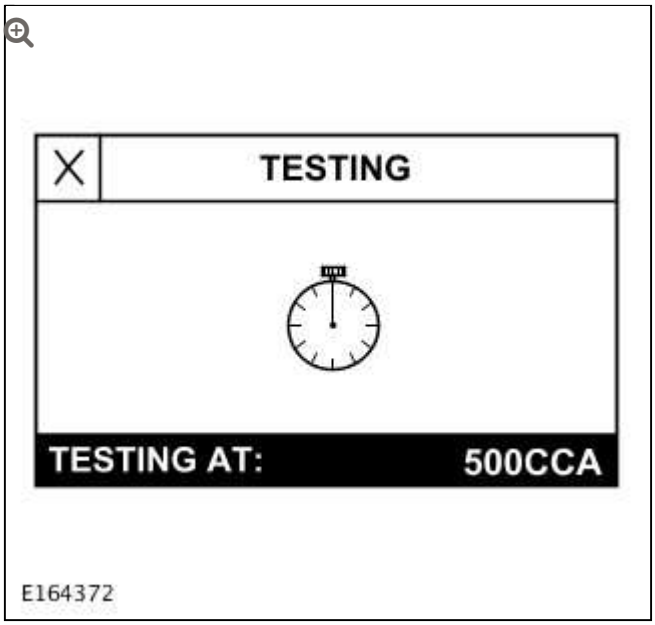

13	SURFACE CHARGE **NOTE:** This step will take place automatically only when required. The SURFACE CHARGE test is an additional step required if the battery voltage is above 12.55v with a low CCA measured ▪ Follow the battery tester on screen instructions ▪ 1. Turn the ignition ON (position2) ▪ 2. Turn ON the headlights (high beam) until the Battery Tester shows- Turn OFF headlights	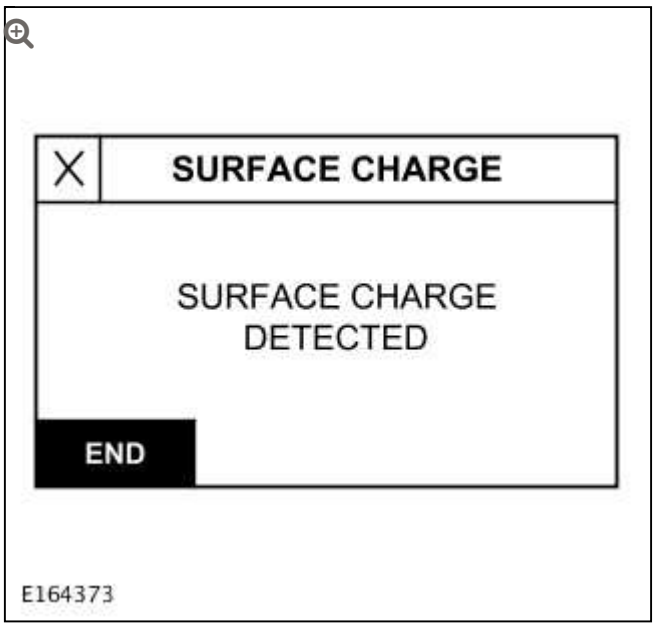

	▪ 3. Turn the ignition OFF (position 0)	
14	BATTERY CHARGE **NOTES:** ▪ This step will take place automatically only when required. ▪ To support a Warranty Claim, TEST CODE details for BEFORE CHARGING and AFTER CHARGING must be supplied in the technical comments box of the Warranty Claim. Using the scroll arrow keys on the battery tester panel: Select BEFORE CHARGING if the battery has not been connected to a recommended mains charger and select NEXT to continue Select AFTER CHARGING if the battery has been connected to a recommended mains charger for the recommended time shown on the result screen	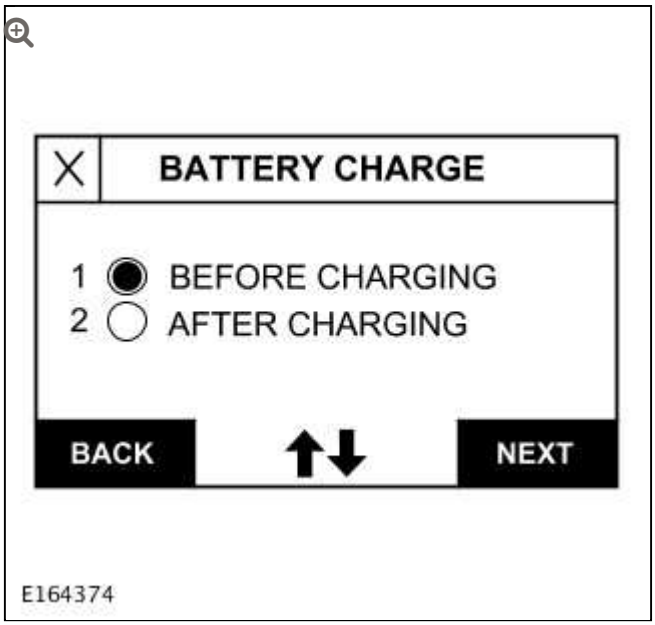

	Select NEXT to continue	
15	DEEP SCAN **NOTE:** This step will take place automatically only when required. The battery tester will display and complete an automated DEEP SCAN test only if required, then automatically advance when the DEEP SCAN test has completed	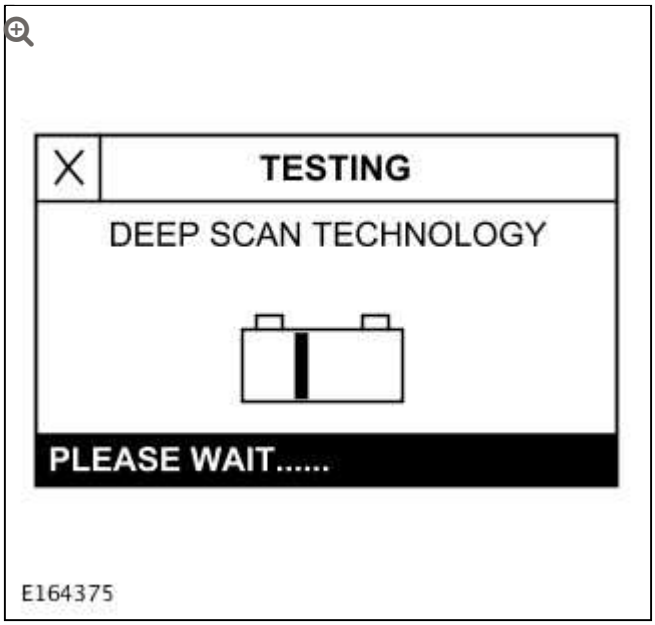
16	CONNECTING to Wi-Fi	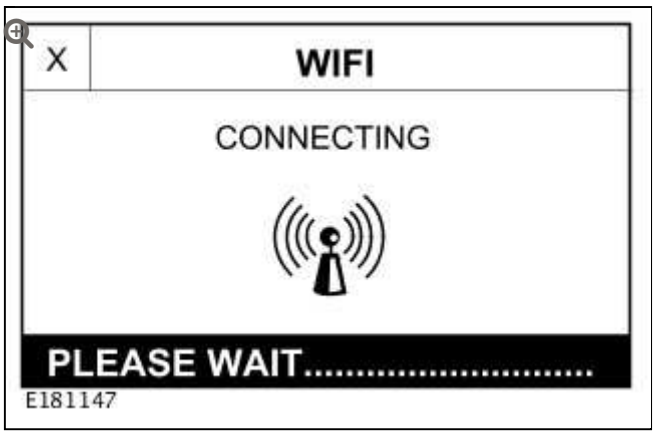

		NOTES: ▪ A warning message is displayed if the battery tester is unable to connect to a Wi-Fi network. Locate WIFI SETTINGS in the UTILITY MENU and follow the on screen instructions. ▪ If the battery tester is not fitted with a Wi-Fi pod, the battery tester will move on to RESULTS (Step 19). The battery tester will now use the A331 Wi-Fi pod (if installed) to connect to the local Wi-Fi network and connect to the Battery Management Information Service (BMIS) server	
	17	SENDING BMIS DATA.	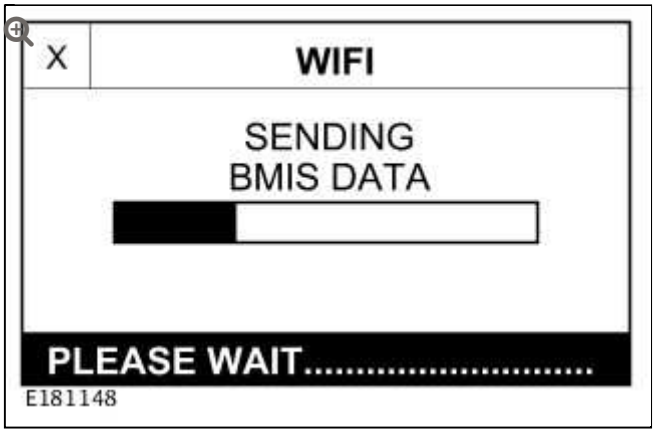

	NOTE: A warning message is displayed if the battery tester is unable to connect to the BMIS server. Your dedicated IT department may be required to complete all or some of the set up procedure. The battery test result data is now being transferred to the BMIS server	
18	BMIS DATA PASSED to SERVER The battery test result data has been successfully saved to the BMIS server	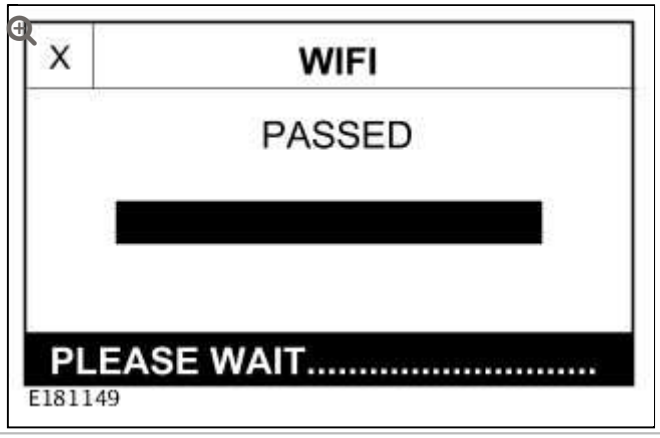 E181149
19	RESULTS Review the battery test results and complete the appropriate actions (see Battery Tester Results Table)	G 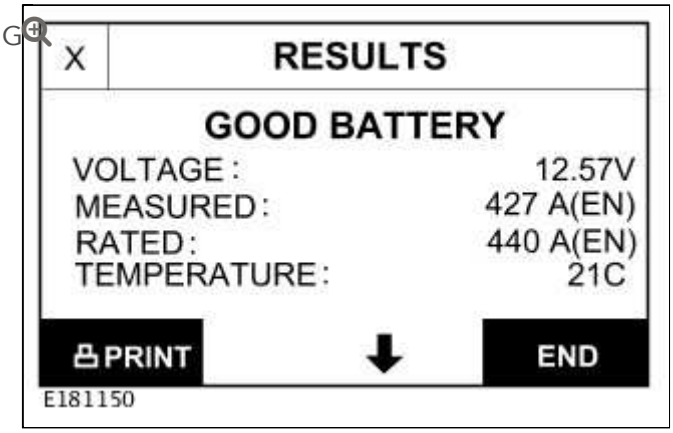 E181150
20	TEST CODE	

NOTES:

- To support a Warranty Claim, TEST CODE details for Before Charging and After Charging must be supplied in the technical comments box of the Warranty Claim.
- To support a Warranty Claim, TEST CODE details for BEFORE CHARGING and AFTER CHARGING must be supplied in the technical comments box of the Warranty Claim.

From the RESULTS display, view the TEST CODE using the scroll arrow keys on the battery tester panel

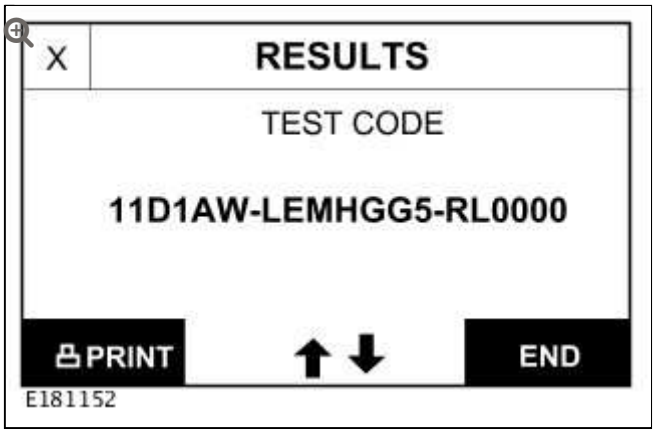

Battery Tester Results Table

RESULTS	ACTION
GOOD BATTERY	Return the battery to service

CHARGE AND RE-TEST	**NOTE:** To support a Warranty Claim, TEST CODE details for Before Charging and After Charging must be supplied in the technical comments box of the Warranty Claim. When the battery test result equals CHARGE & RETEST, view the TIME TO CHARGE screen using the scroll arrow keys on the Battery Tester panel Follow the 50AMP charge time for all vehicles, except Defender which can be charged with a 25 Amp charger Follow the recommended action in the test results If the second battery test result equals CHARGE & RETEST the battery must be replaced	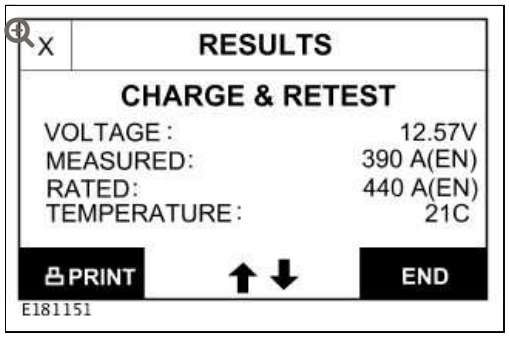 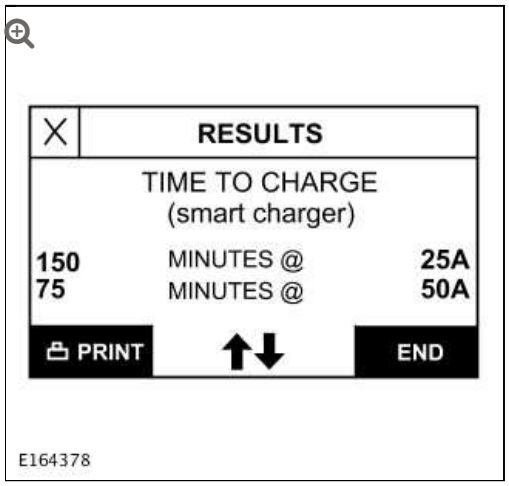
REPLACE BATTERY OR BAD CELL-REPLACE	▪ 1. Repeat the test with the battery disconnected from the vehicle. Ensure OUT OF VEHICLE is selected as the Battery Location for the repeat test	

	▪ 2. Follow the instructions as per the test result ▪ For a repeat REPLACE BATTERY or BAD-CELL test result, DO NOT ATTEMPT TO RECHARGE THE BATTERY, REPLACE THE BATTERY	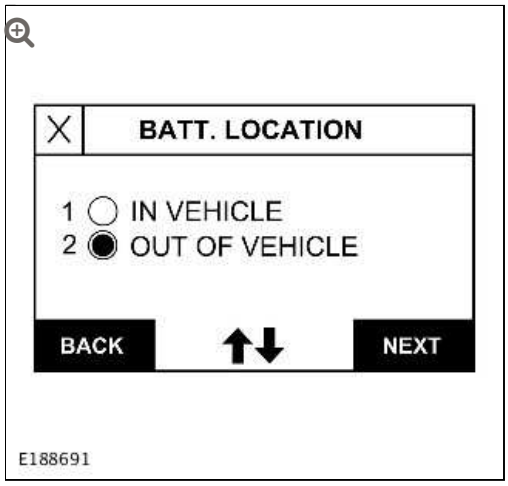
FROZEN BATTERY	Allow the battery to thaw naturally in workshop conditions and re-test	
UNABLE TO DO TEST	Disconnect the battery from the vehicle and re-test	

Flooded Battery Care Point

If the vehicle is equipped with a flooded battery, ensure the replacement battery is a flooded battery of the same specification (cold cranking amperage (CCA), battery standard (EN/SAE) / amp hour rating (Ah)) as the original battery

Under no circumstances should you fit a flooded battery to a vehicle that originally had an AGM battery, unless formally instructed by Jaguar/Land Rover

AGM Battery Care Point

If the vehicle is equipped with an absorbed glass mat (AGM) battery, ensure the replacement battery is a AGM battery of the same specification (cold cranking amperage (CCA), battery standard (EN/SAE) / amp hour rating (Ah)) as the original battery. Replacing an AGM battery for a flooded type battery is likely to result in reduced battery life and should not be carried out, unless formally instructed by Jaguar/Land Rover

DTC INDEX

For a list of Diagnostic Trouble Codes (DTCs) that could be logged on this vehicle, please refer to Section 100-00.

BATTERY, MOUNTING AND CABLES

BATTERY TRAY (G1341964)

REMOVAL AND INSTALLATION

86.15.11	BATTERY CARRIER - RENEW	ALL DERIVATIVES	0.6	USED WITHINS	+

REMOVAL

NOTE:

Removal steps in this procedure may contain installation details.

1. Disconnect the battery ground cable.
   For additional information, refer to: Specifications (414-00, Specifications).

2. **WARNING:**

   Make sure to support the vehicle with axle stands.

   Raise and support the vehicle.

3. For additional information, refer to: Battery (414-01, Removal and Installation).

4. For additional information, refer to: Fender Splash Shield (501-02, Removal and Installation).

5. **NOTE:**

LHD illustration shown, RHD is similar.

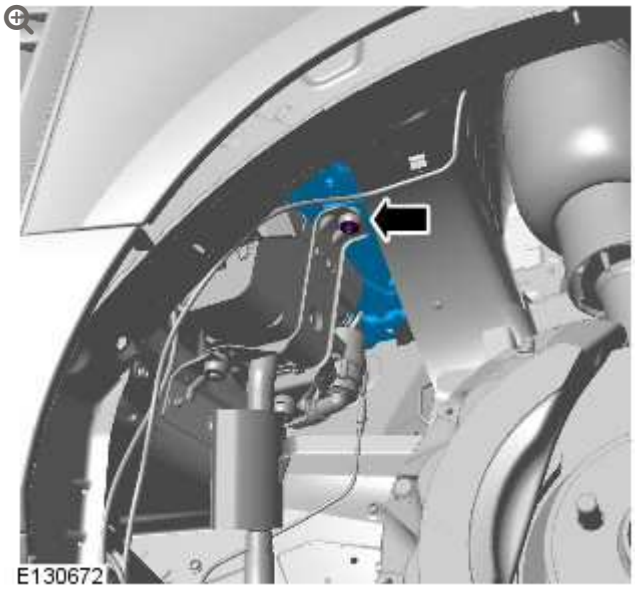

TORQUE: 10 Nm

6. **NOTE:**

LHD illustration shown, RHD is similar.

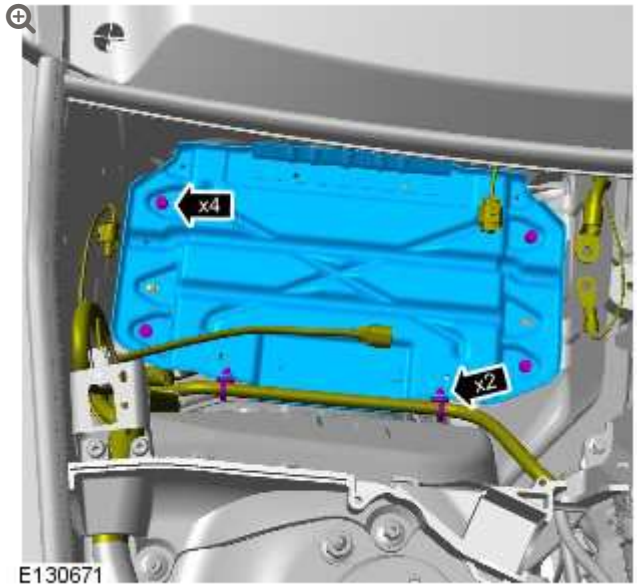

TORQUE: 5 Nm

INSTALLATION

1. To install, reverse the removal procedure.

BATTERY, MOUNTING AND CABLES

BATTERY (G1313542)

REMOVAL AND INSTALLATION

86.15.01	BATTERY (S) - EACH - RENEW	5000 CC, AJ V8	0.5	USED WITHINS	+

REMOVAL

NOTES:

- Some variation in the illustrations may occur, but the essential information is always correct.
- Removal steps in this procedure may contain installation details.
- If a new battery is installed, the battery monitoring system (BMS) must be reset using Land Rover approved diagnostic equipment.

All vehicles

1. Refer to: Specifications (414-00 Battery and Charging System - General Information, Specifications).

2. Refer to: Engine Control Module (ECM) (303-14 Electronic Engine Controls - TDV8 4.4L Diesel, Removal and Installation).

3. **NOTE:**

RHD illustration shown, LHD is similar.

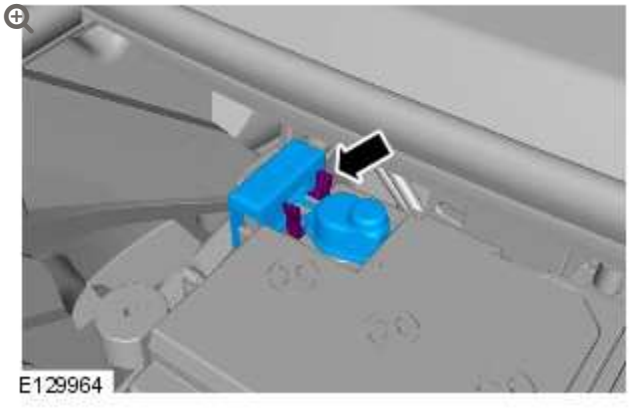

4. **NOTES:**

- RHD illustration shown, LHD is similar.
- Disconnect the ground cable first.

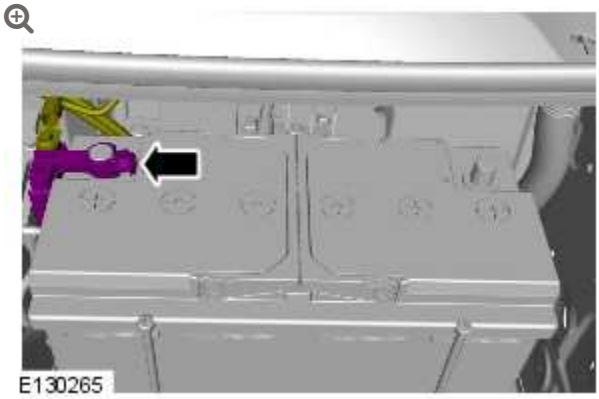

Torque: **6 Nm**

5.

NOTE:

LHD illustration shown, RHD is similar.

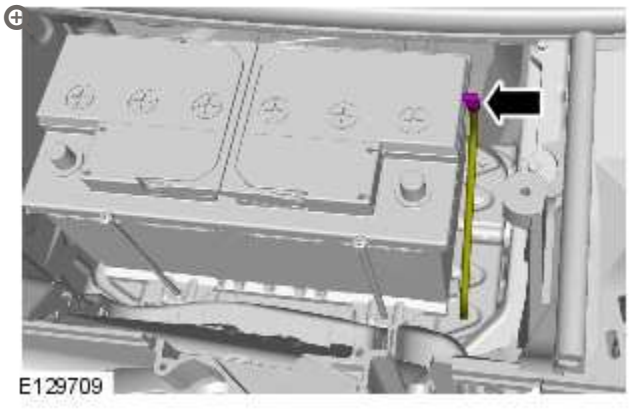

Right-hand drive vehicles

6.

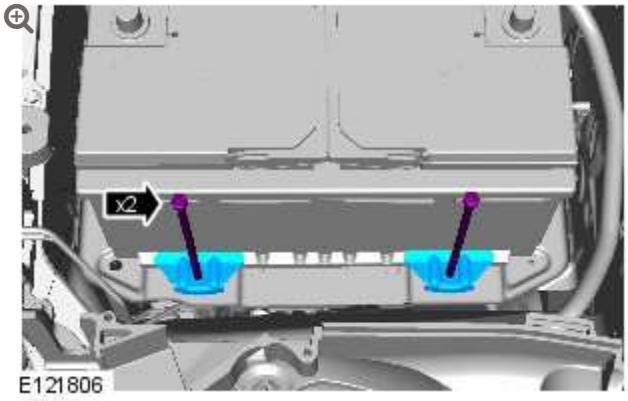

Torque: **9 Nm**

Left-hand drive vehicles

7.

CAUTION:

Make sure the component is aligned as shown.

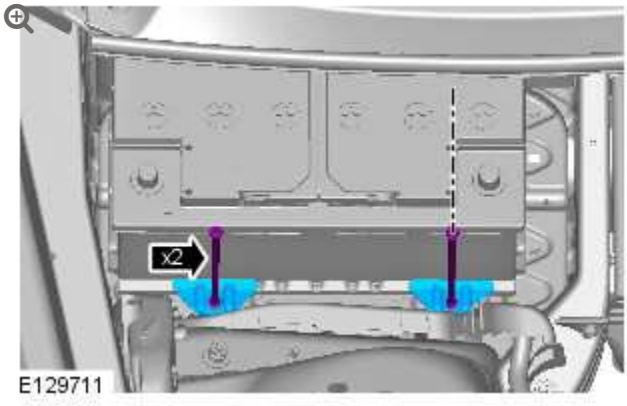

All vehicles

8.

CAUTIONS:

- Make sure that the battery monitoring system (BMS) module wiring harness does not get caught beneath the battery securing clamp.
- Make sure that the battery is positioned fully outboard on the battery tray and that no harnesses or hoses are trapped before securing the battery with the bolts.

NOTE:

RHD illustration shown, LHD is similar.

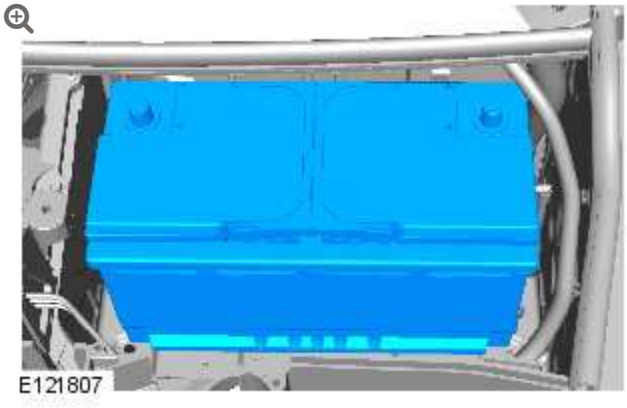

INSTALLATION

1. **CAUTION:**

   Make sure the battery monitoring system (BMS) electrical connector is connected to the module, before installing the BMS on to the battery terminal.

   NOTE:

   To install, reverse the removal sequence.

2. Refer to: Specifications (414-00 Battery and Charging System - General Information, Specifications).

3. **NOTES:**

   - This step is only necessary when installing a new battery.
   - This step only applies to V8 5.0L and TDV8 4.4L variants.

Using Land Rover approved diagnostic equipment, reset the battery monitoring system (BMS).

BATTERY, MOUNTING AND CABLES

DESCRIPTION AND OPERATION

COMPONENT LOCATION

NOTE:

Typical installation shown

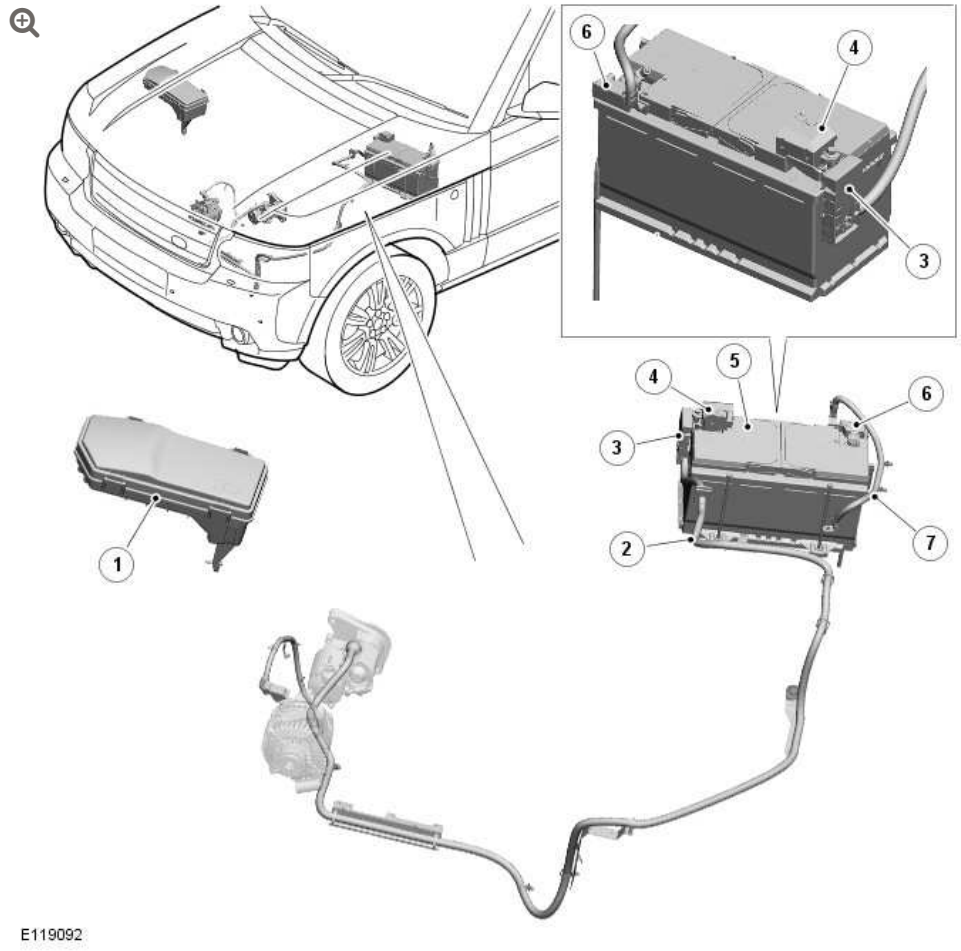

ITEM	DESCRIPTION
1	Battery Junction Box (BJB)
2	+VE battery cable
3	Megafuse
4	Transit relay
5	Battery
6	Battery monitoring system module
7	-VE battery cable

INTRODUCTION

Mounted on the battery negative terminal is a battery monitoring system module. The battery monitoring system module is integral with the battery negative cable and is controlled by the ECM (engine

control module). The battery monitoring system module is connected to the CJB (central junction box) on a LIN (local interconnect network) bus and communicates with the ECM via the high speed CAN (controller area network) bus.

CAUTION:

To avoid damaging the battery monitoring system module and maintain the correct system operation, always use a suitable body ground point rather than the battery negative terminal when connecting a slave power supply to the vehicle.

If a new battery is fitted to the vehicle, the battery monitoring system module will need to be reset using a Land Rover approved diagnostic system.

Fitted on the battery positive terminal is a transit relay. The transit relay must be removed from the vehicle during the Pre-Delivery Inspection (PDI). For additional information, refer to the PDI Manual.

BATTERY

Diesel variants use a 90 Ah/950 A SAE battery.

Petrol variants use a 90 Ah/800 A SAE battery, cold climate markets use a 90 Ah/950 A EN battery.

The battery is located in the engine compartment, on the passenger side. It sits in a tray and is secured with clamp plates and bolts.

The battery terminal posts allow for the battery cables to be connected with clamp type connections.

When removing the battery, ensure the alarm is disarmed and the ignition is switched off. Always disconnect the negative terminal first

and then the positive. When refitting the battery, always fit the positive terminal first followed by the negative.

If the battery requires recharging, always use an approved constant current charger, designed for lead-calcium batteries. DO NOT use a fast charger, as permanent damage to the battery may occur. Always ensure that the charger is connected to a suitable grounding point and not the battery negative terminal.

TRANSPORTATION RELAY



During production of the vehicle a transportation relay is installed on the battery positive terminal, to minimize battery drain during vehicle storage and delivery. The transportation relay provides an automatic means of disconnecting power from all of the electrical systems on the vehicle, but allows power to be easily restored to start and drive the vehicle during loading, unloading and storage.

To start the vehicle when a transportation relay is installed press the hazard warning switch, this activates the transportation relay to power up and allow's the engine to be started. If the ignition is turned on but the engine is not started the vehicle will return transportation mode after 15 seconds.

The transportation relay must be removed from the vehicle prior to customer handover, but no more than 24 hours beforehand in accordance with the battery care procedure.

BATTERY MONITORING SYSTEM

NOTE:

Typical battery monitoring system module shown

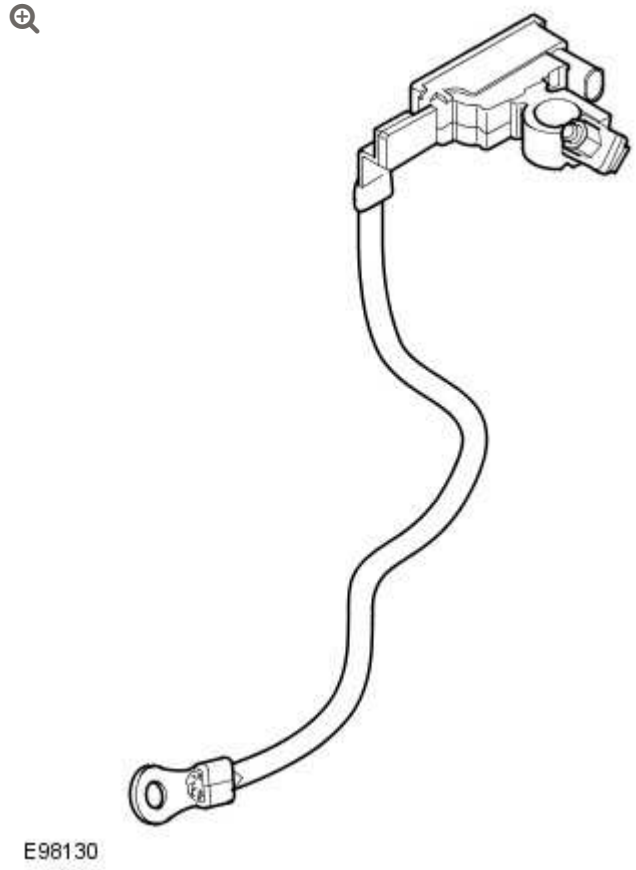

The battery monitoring system module measures various battery parameters and calculates appropriate values to maintain optimum battery charging. The battery monitoring system module is connected to the CJB over a LIN bus connection. The CJB then forwards the values received on the LIN bus from the battery monitoring system module to the ECM over the high speed CAN bus.

The information received by the ECM is used to control the generator target setpoint and also to control the load management function which is in place to ensure that the vehicle loads are

controlled in a manner which maximizes the attributes, whilst protecting the vehicle.

In the event of a system fault, a warning is displayed within the instrument cluster, DTC (diagnostic trouble code)'s are recorded in the appropriate modules (CJB / ECM) and a failsafe strategy is activated. The failsafe strategy includes the switching off of any loads which are controlled via the load management system to help maintain base vehicle function.

The Land Rover approved diagnostic system can be used to interrogate the DTC's from both ECM and CJB which will provide information relating to any existing or historic fault conditions. The diagnostic tester also has a diagnostic routine which is in place diagnose every component involved within the power supply system. The routine is self explanatory and provides a definitive result for each of the individual power supply system components to enable accurate diagnosis of any faults.

CAUTION:

Due to the self-calibration routine, it is recommended that all power supply diagnostic testing is carried out using a Land Rover approved diagnostic system rather than a digital multimeter.

JUNCTION BOXES

A number of junction boxes are used to distribute power throughout the vehicle. For more information on fuse ratings and circuits protected, refer to the Electrical Circuit Diagrams.

BATTERY JUNCTION BOX

The BJB (battery junction box) is located in the engine compartment and is mounted on the bulkhead behind the battery. The BJB receives its power supply from the battery and contains 7 fusible links.

BATTERY JUNCTION BOX 2

The BJB 2 is mounted on the engine bulkhead, behind the battery. The BJB receives its power supply from the battery and contains 2 fusible links.

ENGINE JUNCTION BOX (EJB)

The EJB (engine junction box) is located in the engine compartment on the RH side and receives its power feed from the BJB 2.

CENTRAL JUNCTION BOX

The CJB is located behind the glove box and receives its power supplies from the BJB. The CJB is a "smart" fusebox and provides various vehicle level functions. The CJB contains fusible links, blade fuses and relays.

REAR JUNCTION BOX

The rear junction box is located on the RH (right-hand) side of the luggage compartment, behind the side trim casing. The rear junction box contains blade fuses and relays, and receives its main power supply from the BJB.

GENERATOR AND REGULATOR – V8 5.0L PETROL/V8 S/C 5.0L PETROL

SPECIFICATIONS

DESCRIPTION	NM	LB-FT	LB-IN
Generator retaining bolts	47	35	-
Battery positive cable retaining nut	12	9	-

GENERATOR AND REGULATOR – V8 5.0L PETROL/V8 S/C 5.0L PETROL

DESCRIPTION AND OPERATION

COMPONENT LOCATION

NOTE:

Installation on supercharged engine shown, installation on naturally aspirated engine similar.

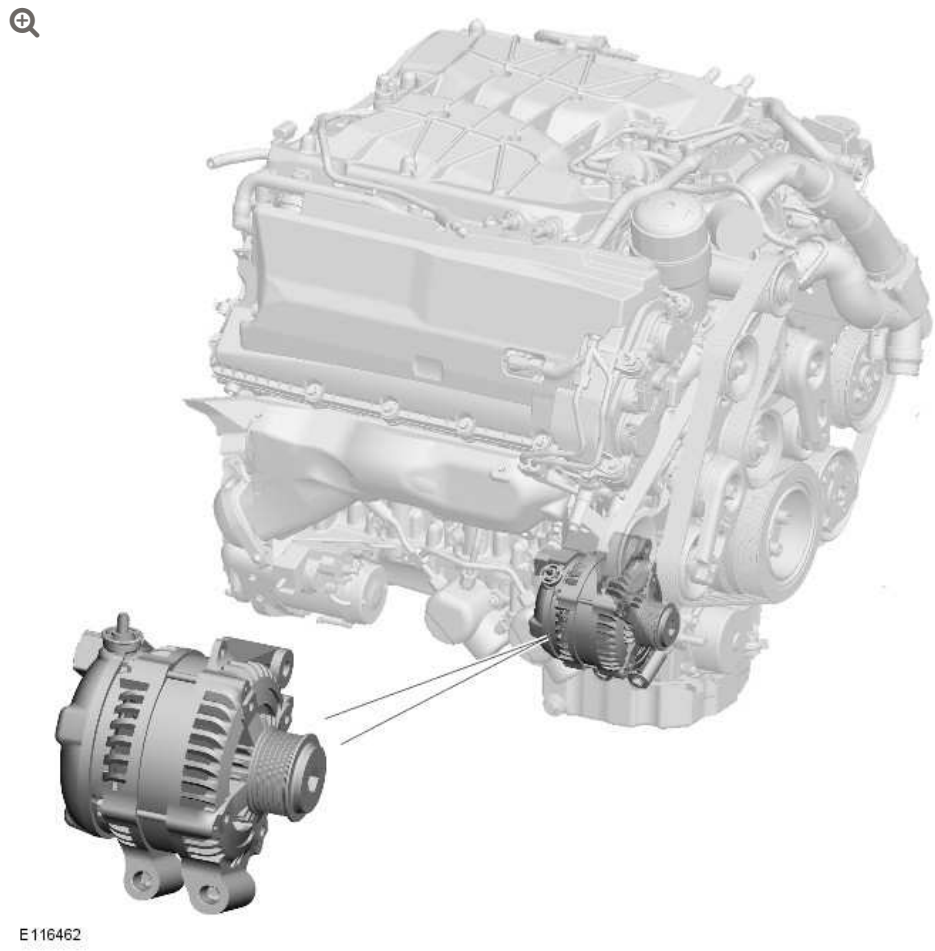

OVERVIEW

The generator is a self exciting type manufactured by Denso and is capable of producing an output current of 150 Amps. The generator is located at the front RH (right-hand) side of the engine, and is secured to an engine mounted bracket with a top pivot bolt and 2 lower bolts. The generator mountings provide the electrical ground connection for the generator.

The generator pulley is driven by the engine crankshaft pulley via the accessory drive belt.
For additional information, refer to: Accessory Drive (303-05A, Description and Operation).

The generator comprises the following major components:

- Stator
- Rotor
- Rectifier pack
- Regulator.

STATOR

The stator contains 3 sets of coils manufactured from copper wire with the ends formed into a 'star' connection. Rotation of the rotor within the stator produces an AC (alternating current) in the coils.

ROTOR

The rotor comprises a field winding, wound around an iron core and mounted on a common shaft. The ends of the common shaft form the magnetic north and south poles. The rotor is housed within the stator and mounted on bearings to provide smooth running and support, due to the side loading applied by the accessory drive belt tension.

During engine cranking when generator speed is low, the ignition switch supply provides an excitation current to the rotor via brushes and contact slip rings at the end of the common shaft. As the generator speed increases the generator becomes self exciting.

RECTIFIER

The rectifier converts the AC current produced in the stator coils into DC (direct current) that is required by the vehicle electrical system. The rectifier also prevents current flow from the battery to the generator when the generator output voltage is less than the battery voltage.

The rectifier comprises 12 semi-conductor diodes, 6 mounted on the positive heat sink and 6 on the negative. The heat sink dissipates the resultant heat created in the electrical conversion process.

REGULATOR

The regulator provides a controllable variable voltage output from the generator and feedback of various parameters including fault information. A threaded copper post connection on the generator outer casing supplies the rectified and regulated DC current from the generator, via a large diameter cable to the battery positive terminal. A single pin electrical connector located on the rear outer casing provides a LIN (local interconnect network) interface for generator monitoring and control by the ECM (engine control module).

The Battery Monitoring system (BMS) monitors battery temperature and calculates the optimal charging voltage setpoint. This is sent via LIN to the CJB (central junction box) which in turn sends it to the ECM via the CAN (controller area network). The ECM then sends this voltage setpoint to the alternator via LIN. The entire system operates on a closed loop principle to maintain optimal battery terminal voltage.

The ECM monitors the generator for mechanical or electrical failure . If a fault is detected, DTC (diagnostic trouble code)'s are stored in the ECM memory and a message is communicated on the high speed CAN bus to the instrument cluster to illuminate the charge warning indicator lamp.
For additional information, refer to: Instrument Cluster (413-01, Description and Operation).

During engine starting, the charge warning indicator lamp is illuminated in the instrument cluster when the ignition is energized, and is extinguished when the engine starts and there are no faults present on the charging system.

If the generator is close to being overloaded then an increased idle speed set point will be set which will optimise the amount of power available to operate vehicle features.

LOAD MANAGEMENT SYSTEM

The load management system comprises software resident in the ECM module.

The purpose of load management is to protect the battery during abnormal usage of the vehicle. With the engine not running the system will request the systems on the Media Orientated System Transport (MOST) ring and the air suspension system to enter 'power save' mode. , A 'WARNING - LOW BATTERY' message will be displayed in the message center.
For additional information, refer to: Information and Message Center (413-08, Description and Operation).

With the engine running the system will modulate features such as seat and screen heating to prevent the battery voltage becoming critically low to the point where the vehicle becomes un-operational.

CONTROL DIAGRAM

NOTE:

A = Hardwired; D = High speed CAN; N = Medium speed CAN; O = LIN bus

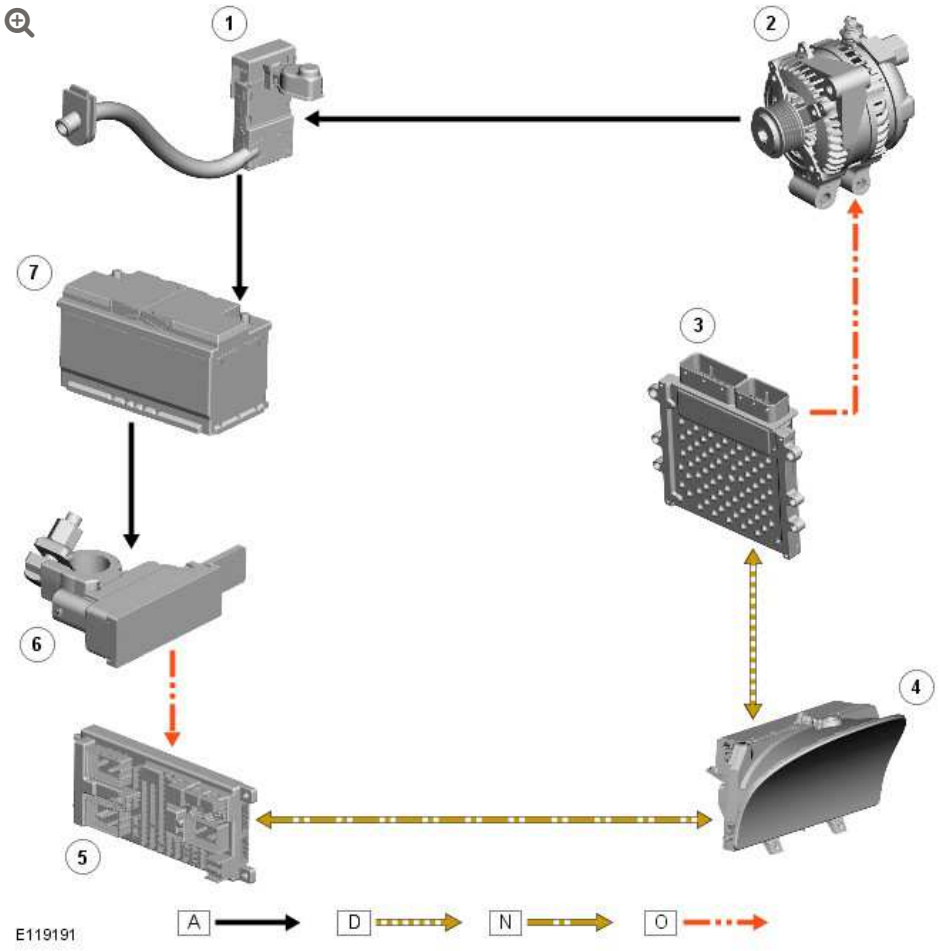

ITEM	DESCRIPTION
1	400 A megafuse
2	Generator
3	ECM (engine control module)
4	Instrument cluster
5	CJB (central junction box)
6	Battery monitoring system sensor
7	Battery

PRINCIPLES OF OPERATION

The output voltage required from the generator is calculated by the battery monitoring system. For additional information, refer to

Battery, Mounting and Cables (414-01 Battery, Mounting and Cables, Description and Operation).

The battery monitoring system signals the required voltage to the ECM via the CJB and the instrument cluster. The ECM then transmits the required voltage on the LIN bus connection with the voltage regulator in the generator. The output from the generator is supplied to the battery through the main battery positive cable.

The ECM will over-ride the voltage value requested by the battery monitoring system if it detects a fault in the generator. The ECM also signals the instrument cluster to display a warning message if it detects a fault with the generator.

2012.0 RANGE ROVER (LM), 414-02

GENERATOR AND REGULATOR – V8 5.0L PETROL/V8 S/C 5.0L PETROL

DIAGNOSIS AND TESTING

For additional information.

REFER to: Charging System (414-00, Diagnosis and Testing).

GENERATOR AND REGULATOR – V8 5.0L PETROL/V8 S/C 5.0L PETROL

GENERATOR – V8 S/C 5.0L PETROL (G1224666)

REMOVAL AND INSTALLATION

86.10.02	ALTERNATOR – RENEW	5000 CC, AJ V8, SUPERCHARGED	1.1	USED WITHINS	+

REMOVAL

NOTE:

Some variation in the illustrations may occur, but the essential information is always correct.

1. Disconnect the battery ground cable.
   Refer to: Specifications (414-00 Battery and Charging System - General Information, Specifications).
2. Refer to: Air Cleaner Outlet Pipe LH (303-12C, Removal and Installation).
3. Refer to: Air Cleaner Outlet Pipe RH (303-12C, Removal and Installation).

4. Refer to: Engine Undershield (501-02 Front End Body Panels, Removal and Installation).

5. Refer to: Cooling Fan (303-03 Engine Cooling - V8 S/C 5.0L Petrol, Removal and Installation).

6. 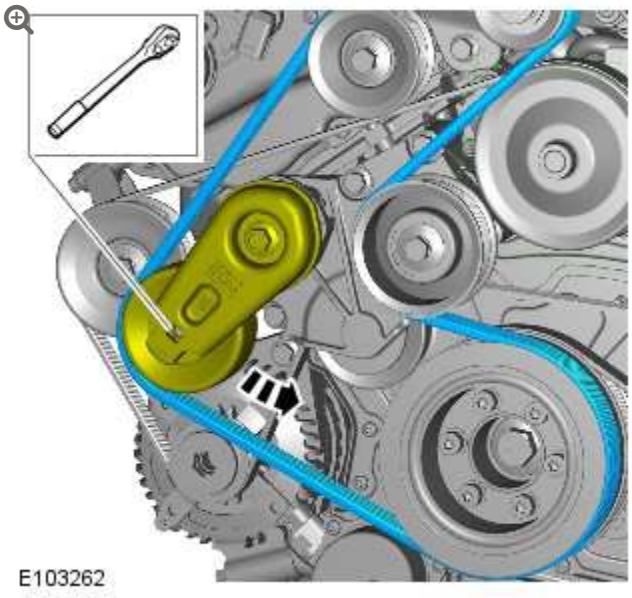

7. 

Torque: **40 Nm**

8.

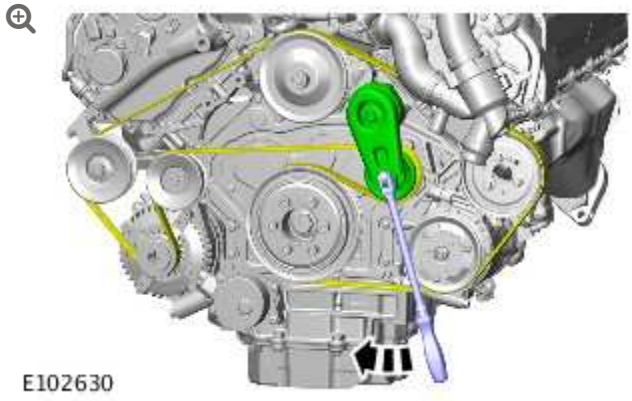

9.

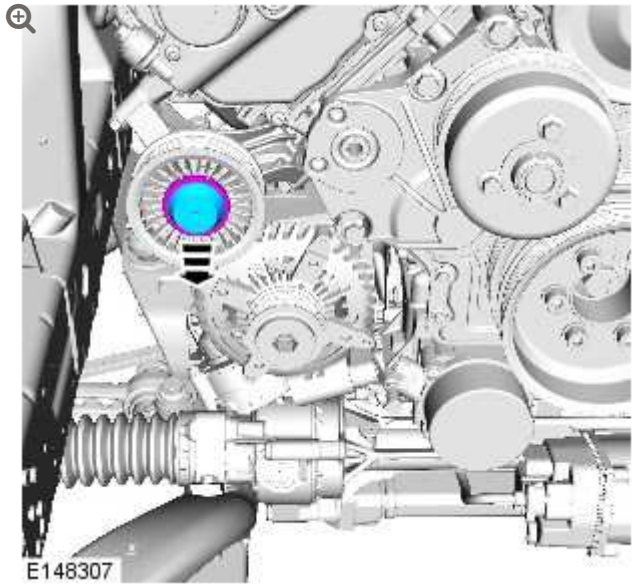

10.

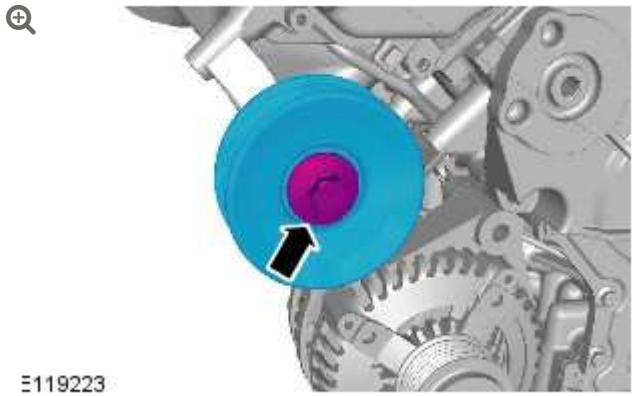

Torque: **40 Nm**

11.

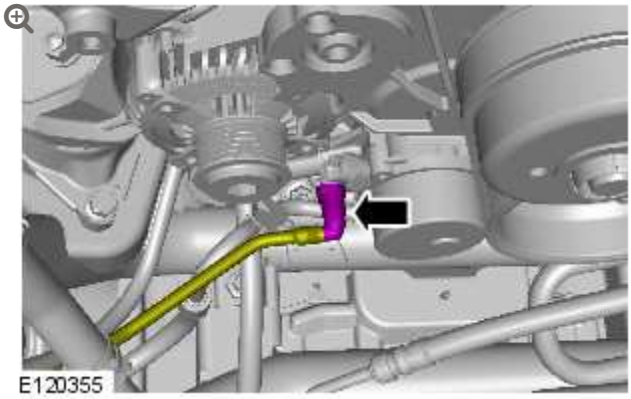

12.

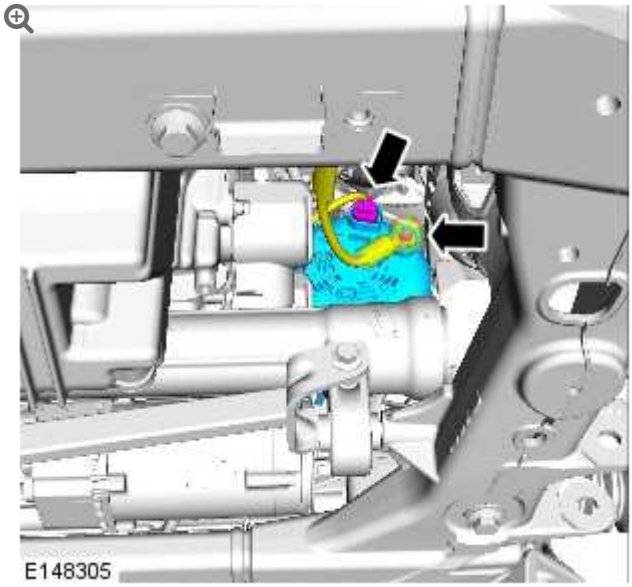

Torque: **12 Nm**

13.

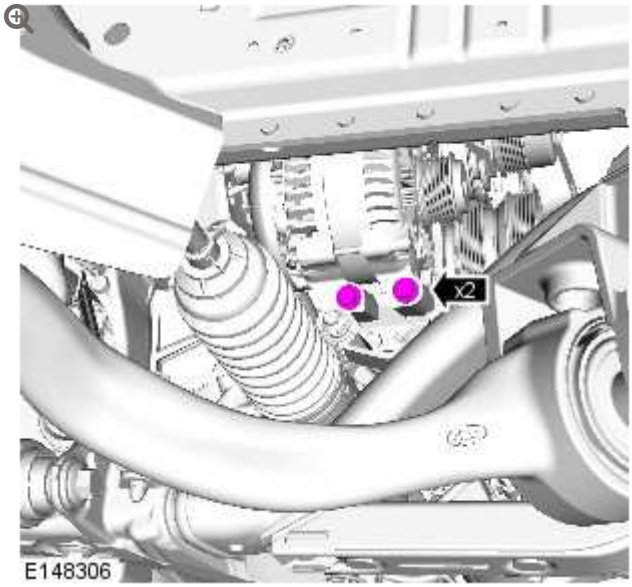

Torque: **48 Nm**

14.

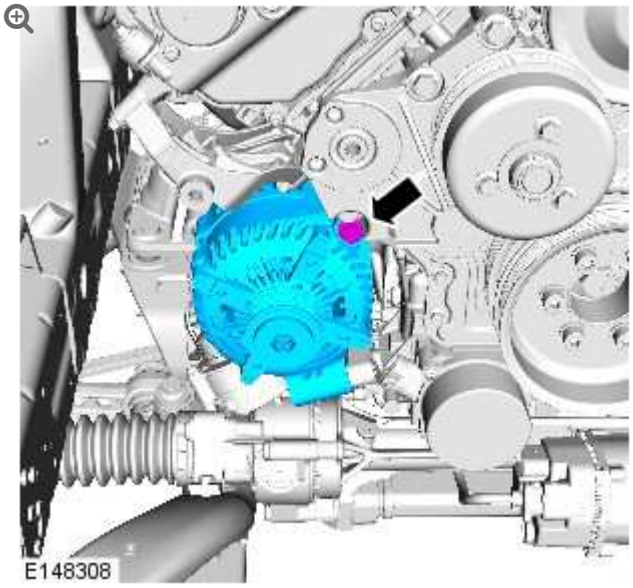

Torque: **48 Nm**

INSTALLATION

1.

CAUTIONS:

- Make sure that the accessory drive belt is correctly located on each pulley.
- Clean and inspect the accessory drive belt pulleys for damage.

To install, reverse the removal procedure.

INFORMATION AND ENTERTAINMENT SYSTEM – GENERAL INFORMATION

DIAGNOSIS AND TESTING

PRINCIPLES OF OPERATION

For a detailed description of the Information and Entertainment System, refer to the relevant Description and Operation sections in the workshop manual. REFER to: Audio System (415-01A Audio Unit, Description and Operation).

INSPECTION AND VERIFICATION

CAUTION:

Diagnosis by substitution from a donor vehicle is **NOT** acceptable. Substitution of control modules does not guarantee confirmation of a fault, and may also cause additional faults in the vehicle being tested and/or the donor vehicle.

NOTES:

- If the control module or a component is suspect and the vehicle remains under manufacturer warranty, refer to the Warranty Policy and Procedures manual, or determine if any prior approval programme is in operation, prior to the installation of a new module/component.
- When performing voltage or resistance tests, always use a digital multimeter accurate to three decimal places, and with an up-to-date calibration certificate. When testing resistance always take the resistance of the digital multimeter leads into account.
- All diagnostic equipment should comply with local legislation.
- Relevant diagnostic equipment should be regularly checked and calibrated according to the manufacturer's instructions.
- The workshop should be equipped with a full range of general equipment which is to be kept in good order and available to all suitably trained staff.
- Diagnostic equipment must meet the JLR Minimum Standards for general equipment as outlined in TOPIx.
- Check and rectify basic faults before beginning diagnostic routines involving pinpoint tests.

1. Verify the customer concern

2. Visually inspect for obvious signs of damage and system integrity

Visual Inspection

MECHANICAL	ELECTRICAL

MECHANICAL	ELECTRICAL
▪ Check all information and entertainment system modules ▪ Compact disc player jammed, not loading ▪ Scratched/dirty compact discs ▪ Speakers ▪ Switch(s) stuck or damaged	▪ Fuses ▪ Electrical harnesses ▪ Harness connectors ▪ Battery condition, state of charge

3. If an obvious cause for an observed or reported concern is found, correct the cause (if possible) before proceeding to the next step

4. If the cause is not visually evident, verify the symptom and refer to the Symptom Chart, alternatively check for Diagnostic Trouble Codes (DTCs) and refer to the DTC Index

5. Check DDW for open campaigns. Refer to the corresponding bulletins and SSMs which may be valid for the specific customer complaint and carry out the recommendations as required

SYMPTOM CHART

SYMPTOM	DISPLAY	POSSIBLE CAUSES	ACTION
Poor audio quality (all sources)	Display normal	▪ MOST harness connections loose ▪ MOST harness connections contaminated ▪ MOST harness misrouted	▪ Check MOST harness connectors for security ▪ Check MOST harness connectors for contamination ▪ Check the routing of the MOST harness

SYMPTOM	DISPLAY	POSSIBLE CAUSES	ACTION
		▪ Too many bends ▪ Bend radius less than 25mm	
Information and entertainment system inoperative	LED on power switch flashing. Touch screen displaying logo screen (if fault present at ignition on), 'greyed out' (if fault occurred while system in use) or blank	▪ MOST network fault	▪ REFER to: **Communications Network** (418-00 Module Communications Network, Diagnosis and Testing).
NOTE: Satellite Digital Audio Service (SDARS) applies to NAS market vehicles only No Satellite Digital Audio Service (SDARS) channels available	**No signal** or **Acquiring signal**	▪ Vehicle not in USA ▪ Poor signal reception ▪ Satellite Digital Audio Service (SDARS) system fault	▪ No fault to rectify ▪ The vehicle must have clear line of sight to a satellite, which means being outside and having no blockages between the vehicle and the satellite ▪ Using the manufacturer approved diagnostic system, check the Satellite Radio Control Module (SRCM) for related DTCs

SYMPTOM	DISPLAY	POSSIBLE CAUSES	ACTION
			and refer to the relevant DTC index
NOTE: Satellite Digital Audio Service (SDARS) applies to NAS market vehicles only Only one Satellite Digital Audio Service (SDARS) channel available (channel 184)	**Unsubscribed**	▪ Channel 184 is available without subscription for a limited period (6 months)	▪ No fault to rectify. Subscribe to Satellite Digital Audio Service (SDARS) to resume service
NOTE: Satellite Digital Audio Service (SDARS) applies to NAS market vehicles only No Satellite Digital Audio Service (SDARS) channels available after 6 months without subscribing	**Unsubscribed**	▪ Channel 184 is available without subscription for a limited period (6 months)	▪ No fault to rectify. Subscribe to Satellite Digital Audio Service (SDARS) to resume service
NOTE: Satellite Digital Audio Service (SDARS) applies to NAS market vehicles only	**Unsubscribed**	▪ Adult channels blocked by subscription type (family package)	▪ No fault to rectify. Subscribe to Satellite Digital Audio Service (SDARS) full package to receive adult channels

SYMPTOM	DISPLAY	POSSIBLE CAUSES	ACTION
Some Satellite Digital Audio Service (SDARS) unavailable			
NOTE: Satellite Digital Audio Service (SDARS) applies to NAS market vehicles only Satellite Digital Audio Service (SDARS) pay channels unavailable	**Unsubscribed**	▪ Payment not made	▪ No fault to rectify

SPEAKER DIAGNOSTICS

For Speaker Diagnostics please refer to section 415-01 Diagnosis and Testing - Speakers in the workshop manual.
REFER to: Speakers (415-01B Information and Entertainment System, Diagnosis and Testing).

DTC INDEX

For a list of Diagnostic Trouble Codes (DTCs) that could be logged on this vehicle, please refer to Section 100-00.

INFORMATION AND ENTERTAINMENT SYSTEM – GENERAL INFORMATION

DIAGNOSIS AND TESTING

PRINCIPLE OF OPERATION

For a detailed description of the Cellular phone system and operation, refer to the relevant Diagnosis and Testing section of the workshop manual. REFER to: Cellular Phone (419-08, Description and Operation).

INSPECTION AND VERIFICATION

CAUTION:

Diagnosis by substitution from a donor vehicle is **NOT** acceptable. Substitution of control modules does not guarantee confirmation of a fault and may also cause additional faults in the vehicle being checked and/or the donor vehicle.

NOTE:

Check and rectify basic faults before beginning diagnostic routines involving pinpoint tests.

1. Verify the customer concern.
2. Visually inspect for obvious signs of mechanical or electrical damage.

Visual Inspection

MECHANICAL	ELECTRICAL
▪ Check all information and entertainment system modules ▪ Speakers ▪ Switch(s) stuck or damaged	▪ Fuses ▪ Electrical harnesses ▪ Harness connectors ▪ Battery condition, state of charge

3. If an obvious cause for an observed or reported concern is found, correct the cause (if possible) before proceeding to the next step.
4. If the cause is not visually evident, check for Diagnostic Trouble Codes (DTCs) and refer to the DTC Index.

SYMPTOM CHART

SYMPTOM	ACTION
Unable to pair	▪ GO to Pinpoint Test **A.**
Not Auto Connecting	▪ GO to Pinpoint Test **B.**

SYMPTOM	ACTION
Poor Quality Audio	▪ GO to Pinpoint Test **C.**
No Audio to 3rd Party	▪ GO to Pinpoint Test **D.**
No Audio from 3rd Party	▪ GO to Pinpoint Test **E.**
No Audio	▪ GO to Pinpoint Test **F.**

DTC INDEX

For a complete list of Diagnostic Trouble Codes (DTCs) that could be logged on this vehicle refer to Section 100-00 of the Workshop Manual.
REFER to: Diagnostic Trouble Code (DTC) Index - DTC: Module Name: Bluetooth Module (100-00 General Information, Description and Operation).

PINPOINT TESTS

NOTE:

Prior to continuing with any diagnosis, ensure that the Customer telephone and level of software is included on the JLR approved list, the telephone battery is fully charged and in a serviceable condition, the bluetooth function is activated and the telephone handset is placed within the vehicle cabin area.

PINPOINT TEST A : UNABLE TO PAIR	
TEST CONDITIONS	DETAILS/RESULTS/ACTIONS
A1: 'NO PHONE FITTED' DISPLAY	

PINPOINT TEST A : UNABLE TO PAIR	
	1 Carry out checks to determine if 'No Phone Fitted' is shown on vehicle display.
	Is 'No Phone Fitted' displayed? **Yes** GO to A2. **No** Locate the connected telephone and if not Customer telephone, disconnect from the system.
A2: TELEPHONE BLUETOOTH DEVICE SEARCH	
	1 Carry out Bluetooth device search using Customer handset.
	Is 'Land Rover' identified in Bluetooth device list? **Yes** Select device from list, then continue with diagnosis.GO to A3. **No** Carry out further Bluetooth device search, to a maximum of 4 times, waiting approximately 20 seconds between searches. If 'Land Rover' still not identified in Bluetooth device list, set ignition status to OFF, wait approximately 30 seconds and set ignition status to ON. Carry out further Bluetooth device search, to a maximum of 4 times, waiting approximately 20 seconds between searches. If 'Land Rover' still not identified in Bluetooth device list, contact your local in market support for further assistance.
A3: TELEPHONE HANDSET ERROR	
	1 Check for any error shown on the telephone handset when 'Land Rover' is selected from the Bluetooth device list.
	Was an error immediately shown on the telephone handset? **Yes** Wait approximately 10 seconds then re-attempt selection, to a maximum of 4 times, waiting approximately 10 seconds between each attempt. If error still being displayed, contact your local in market support for assistance. **No** Enter PIN '2121' then continue with diagnosis.GO to A4.
A4: PIN ENTRY STATUS	
	1 Check for successful PIN entry.
	Was PIN entry successful? **Yes** GO to A5.

PINPOINT TEST A : UNABLE TO PAIR	
	No Wait approximately 10 seconds then re-attempt PIN entry, to a maximum of 4 times, waiting approximately 10 seconds between each attempt. If PIN entry is still un-successful, contact your local in market support for assistance.
A5: 'NO PHONE FITTED' DISPLAY	
	1 Carry out checks to determine if 'No Phone Fitted' is still shown on vehicle display.
	Is 'No Phone Fitted' still displayed? **Yes** From the telephone handset, select the connect option for the 'Land Rover' device identified in the Bluetooth device list. If 'No Phone Fitted' is still displayed, suspect a telephone handset fault. Carry out Pinpoint test again using known good telephone handset. **No** The telephone is paired and connected to the system. No further action is required for this symptom.

NOTE:

Prior to continuing with any diagnosis, ensure that the Customer telephone and level of software is included on the JLR approved list, the telephone battery is fully charged and in a serviceable condition, the bluetooth and auto connect functions are activated and the telephone handset is placed within the vehicle cabin area.

PINPOINT TEST B : NOT AUTOMATICALLY CONNECTING	
TEST CONDITIONS	**DETAILS/RESULTS/ACTIONS**
B1: CUSTOMER TELEPHONE IN POSITION 1	
	1 Carry out checks to determine if the Customer telephone is in position 1 in the Bluetooth Module device list.
	Is the Customer telephone in position 1? **Yes** GO to B2.

PINPOINT TEST B : NOT AUTOMATICALLY CONNECTING	
	No Advise Customer that delays in connection will occur if telephone is not listed in position 1.
B2: BLUETOOTH CONNECTION	
	1 Carry out checks to determine if Bluetooth connection to the vehicle has been achieved.
	Has Bluetooth connection to the vehicle been achieved? **Yes** No further action is required for this symptom. **No** GO to B3.
B3: 'NO PHONE FITTED' DISPLAY	
	1 Carry out checks to determine if 'Land Rover' is shown in the Customer Bluetooth telephone device display.
	Is 'Land Rover' identified in the Customer Bluetooth device list? **Yes** Select the device to connect then follow pairing instructions. **No** Carry out the 'Unable to Pair' Pinpoint Test.

NOTE:

Prior to continuing with any diagnosis, ensure that the Customer telephone and level of software is included on the JLR approved list, the telephone battery is fully charged and in a serviceable condition, the telephone is placed within the vehicle cabin area and is connected to the vehicle via bluetooth.

PINPOINT TEST C : POOR QUALITY AUDIO	
TEST CONDITIONS	DETAILS/RESULTS/ACTIONS
C1: SIGNAL STRENGTH	
	1

PINPOINT TEST C : POOR QUALITY AUDIO	
	Check the signal strength displayed on the telephone handset.
	Are at least two signal strength bars shown on the telephone handset display? **Yes** GO to C2. **No** Suspect GSM Network issue. This can explain intermittent audio and dropped calls, and the inability to initiate calls.
C2: POOR AUDIO FROM THIRD PARTY ONLY	
	1 Establish from Customer feedback/symptom if there is poor audio from the Third Party only.
	Is the poor audio from the Third Party only? **Yes** Suspect GSM Network issue. This can explain intermittent audio and dropped calls, and the inability to initiate calls. **No** GO to C3.
C3: POOR AUDIO TO THIRD PARTY ONLY	
	1 Establish from Customer feedback/symptom if there is poor audio to the Third Party only.
	Is the poor audio to the Third Party only? **Yes** Check and install a new microphone as necessary. **No** GO to C4.
C4: POOR AUDIO WITH VEHICLE STATIONARY	
	1 Establish from Customer feedback/symptom if there is poor audio when the vehicle is stationary only.
	Is the poor audio when the vehicle is stationary only? **Yes** Check and install a new microphone as necessary. **No** GO to C5.
C5: THIRD PARTY MOVING VEHICLE	
	1 Establish from Customer feedback/symptom if the Third Party is in a moving vehicle.
	Is the Third Party in a moving vehicle? **Yes**

PINPOINT TEST C : POOR QUALITY AUDIO	
	There are limitations to the way the system can improve audio, and in this situation it is not possible to determine the source of the audio degradation. **No** GO to C6.
C6: CUSTOMER HEARING ECHO	
	1 Establish from Customer feedback/symptom if the Customer is hearing an echo.
	Is the Customer hearing an echo? **Yes** Echo from the Third Party is not vehicle failure, it is the Third Party set-up. No further action is required for this symptom. **No** Contact your local in market support for assistance.

NOTE:

Prior to continuing with any diagnosis, ensure that the Customer telephone and level of software is included on the JLR approved list, the telephone battery is fully charged and in a serviceable condition, the telephone is placed within the vehicle cabin area and is connected to the vehicle via bluetooth.

PINPOINT TEST D : NO AUDIO TO THIRD PARTY	
TEST CONDITIONS	**DETAILS/RESULTS/ACTIONS**
D1: MICROPHONE DIAGNOSTIC TROUBLE CODES (DTCS)	
	1 Using the Manufacturer approved diagnostic system, check for any logged microphone DTCs in Audio Front Control module.
	Is DTC B1D79-01 logged? **Yes** Carry out diagnosis of electrical failure as advised in Action column of DTC Index. **No** Contact your local in market support for assistance.

NOTE:

Prior to continuing with any diagnosis, ensure that the Customer telephone and level of software is included on the JLR approved list, the telephone battery is fully charged and in a serviceable condition, the telephone is placed within the vehicle cabin area and is connected to the vehicle via bluetooth.

PINPOINT TEST E : NO AUDIO FROM THIRD PARTY	
TEST CONDITIONS	DETAILS/RESULTS/ACTIONS
	E1: 'IN CALL' DISPLAY
	1 Carry out checks to determine if 'In Call' is shown on the vehicle display.
	Is vehicle display showing 'In Call'? **Yes** Contact your local in market support for assistance. **No** Call has ended. No further action is required for this symptom.

NOTE:

Prior to continuing with any diagnosis, ensure that the Customer telephone and level of software is included on the JLR approved list, the telephone battery is fully charged and in a serviceable condition, the telephone is placed within the vehicle cabin area and is connected to the vehicle via bluetooth.

PINPOINT TEST F : NO AUDIO	
TEST CONDITIONS	DETAILS/RESULTS/ACTIONS

PINPOINT TEST F : NO AUDIO	
F1: AUDIO FROM THIRD PARTY	
	1 Establish from Customer feedback/symptom if there is Audio from the Third Party.
	Is there Audio from the Third Party? **Yes** GO to F2. **No** Refer to the 'No Audio From Third Party' Pinpoint test.GO to E.
F2: AUDIO TO THIRD PARTY	
	1 Establish from Customer feedback/symptom if there is Audio to the Third Party.
	Is there Audio to the Third Party? **Yes** GO to F3. **No** Refer to the 'No Audio To Third Party' Pinpoint test.GO to D.
F3: CD OR RADIO AUDIO	
	1 Establish from Customer feedback/symptom if there is Audio from the CD or Radio.
	Is there Audio from the CD or Radio? **Yes** GO to F4. **No** Suspect MOST ring fault, refer to electrical circuit diagrams and check/rectify MOST ring as necessary.
F4: TELEPHONE HANDSET AUDIO	
	1 Establish from Customer feedback/symptom if there is Audio from the telephone handset.
	Is there Audio from the telephone handset? **Yes** Ensure vehicle is parked. Disconnect and reconnect handset. If issue not resolved, contact your local in market support for assistance. **No** Contact you local in market support for assistance.

2012.0 RANGE ROVER (LM), 415-00

INFORMATION AND ENTERTAINMENT SYSTEM – GENERAL INFORMATION

DESCRIPTION AND OPERATION

Map Update Applicability - Digital Versatile Disc (DVD) / Universal Serial Bus (USB) Flash Drive / Secure Digital (SD) Memory Card

VEHICLE	PRE - 10MY	10 MY	11 MY	12MY	13MY	14MY	15MY	
XK (X150)	DVD	DVD	DVD	DVD (DVD Australia and New Zealand only)	DVD	DVD	DVD	D
F-Type (X152)	-	-	-	-	-	USB	USB	U
XF (X250/X260)	DVD	DVD	DVD	USB (DVD Australia and New Zealand only)	USB (DVD Australia and New Zealand only)	USB (DVD Australia and New Zealand only)	USB (DVD Australia and New Zealand only)	U (A a Z c
XJ (X351)	-	USB	USB	USB (DVD Australia and New	USB (DVD Australia and New	USB (DVD Australia and New	USB (DVD Australia and New Zealand only)	U

VEHICLE	PRE - 10MY	10 MY	11 MY	12MY	13MY	14MY	15MY	
				Zealand only)	Zealand only)	Zealand only)		
XE (X760)	-	-	-	-	-	-	-	**I T** S **I T F** U
Freelander (L359)	DVD	DVD	DVD	DVD	USB (DVD Australia and New Zealand only)	USB (DVD Australia and New Zealand only)	USB (DVD Australia and New Zealand only)	U (A a Z c
Discovery 3 (L319)	DVD	-	-	-	-	-	-	-
Discovery 4 (L319)	-	External HD Service Tool	External HD Service Tool	USB (DVD Australia and New Zealand only)	USB (DVD Australia and New Zealand only)	USB (DVD Australia and New Zealand only)	USB (DVD Australia and New Zealand only)	U (A a Z c
Discovery Sport (L550)	-	-	-	-	-	-	**InControl Touch** - SD Card, **InControl Touch Plus** - USB	**I T** S **I T F** U
Range Rover Evoque	-	-	-	USB (DVD Australia and New Zealand only)	USB (DVD Australia and New Zealand only)	USB (DVD Australia and New Zealand only)	USB (DVD Australia and New Zealand only)	U
Range Rover Sport (L320)	DVD	External HD Service Tool	External HD Service Tool	USB (DVD Australia and	USB (DVD Australia and	-	-	-

VEHICLE	PRE - 10MY	10 MY	11 MY	12MY	13MY	14MY	15MY	
				New Zealand only)	New Zealand only)			
Range Rover Sport (L494)	-	-	-	-	-	USB (DVD Australia and New Zealand only)	USB (DVD Australia and New Zealand only)	U
Range Rover (L322)	DVD	External HD Service Tool	External HD Service Tool	External HD Service Tool (DVD Australia and New Zealand only)	-	-	-	-
Range Rover (L405)	-	-	-	-	USB (DVD Australia and New Zealand only)	USB (DVD Australia and New Zealand only)	USB (DVD Australia and New Zealand only)	U

NOTE:

For vehicles using a Navigation Control Module (NCM), refer to SD Card Navigation Updates (Asia Navigation) below.

Mapping Regions

REGION	MAPPING AREA
1	North America (USA, Canada and Mexico)
2	Western and Eastern Europe

REGION	MAPPING AREA
3	Japan
4	Middle East (Bahrain, Jordan, Kuwait, Oman, Qatar, Saudi Arabia and UAE
5	South Africa
6	South America (Brazil and Argentina)
7	Russia
8	Pacific (Australia and New Zealand)
9	South East Asia (Malaysia and Singapore)

DVD MAP UPDATES

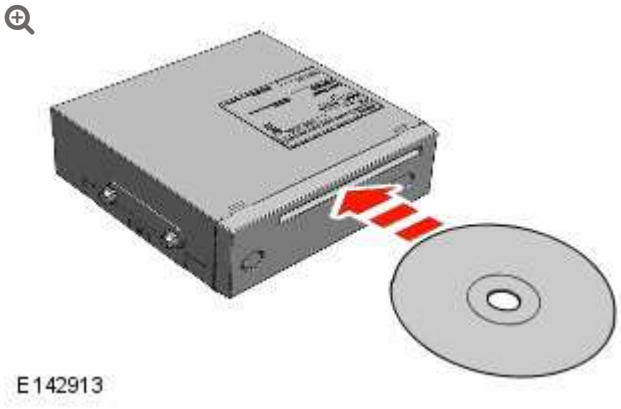

Vehicles equipped with the 'remote' Navigation Control Module (NCM) are supplied with either a DVD or SD memory card map update which is loaded into and left in the NCM. Map data is read directly from the DVD or SD memory card. This update can be performed by the customer.

EXTERNAL HARD DISC DRIVE SERVICE TOOL MAP UPDATES

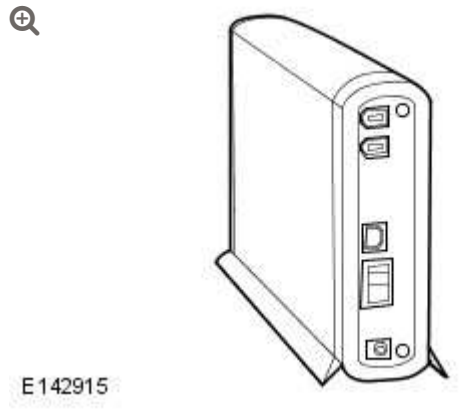

Discovery 4, Discovery Sport, Range Rover Sport and Range Rover vehicles, equipped with a hard disc drive integrated into the Integrated Audio Module (IAM) or vehicles fitted with the Audio Head Unit (AHU), are updated at point of service. On 10MY Range Rover models the hard disc drive is integrated into the Touch Screen (TS). Dealers are supplied with a set of master pack map update DVD's which are loaded onto the dealer Jaguar/Land Rover approved diagnostic equipment. The map data is loaded from the diagnostic equipment onto the navigation tool hard disc drive. The map data is then loaded to the hard disc drive from the navigation tool hard drive.

The following process should be used to update the map data:

NOTE:

The navigation update tool does not need the map data loading every time. This is only necessary when a new map update DVD is released.

- Using the approved Jaguar/Land Rover diagnostic equipment select the navigation update tool.



E142966

- Select **Setup** on the navigation update tool.



E142967

- Connect the navigation update tool to the Jaguar/Land Rover approved diagnostic equipment using the USB cable and select **Continue** to proceed.

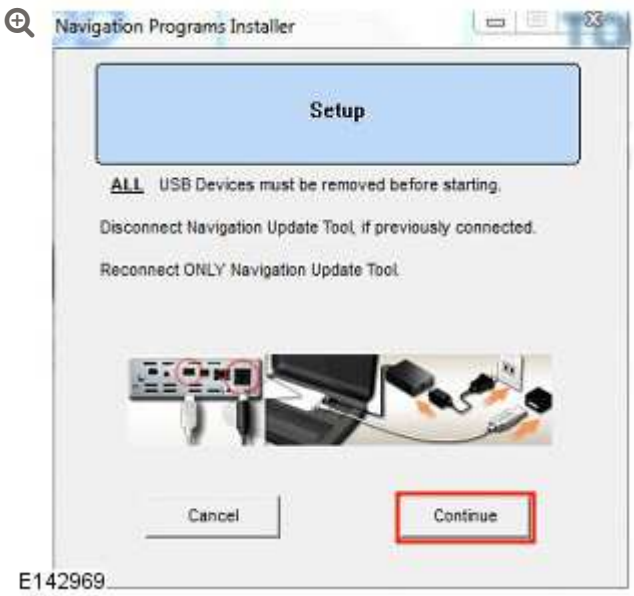

- The navigation update tool will check the connection.



- Select your preferred language from the drop down menu then select **Save and Continue Setup** to proceed.

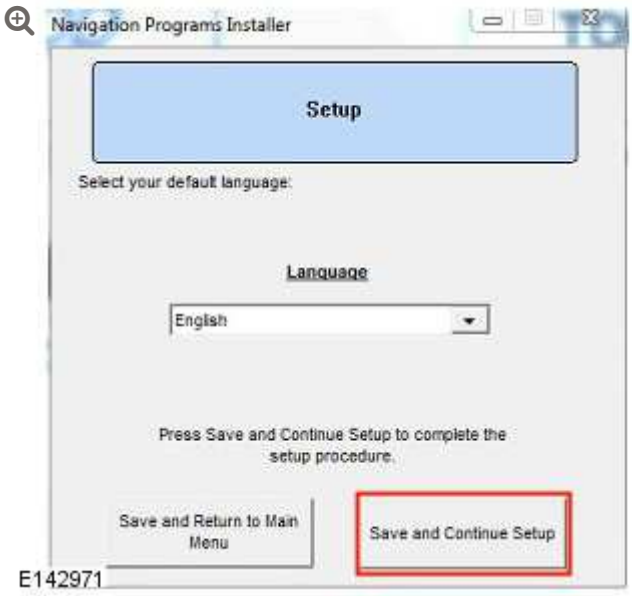

- When the navigation update tool confirms the initial setup is complete, select **Continue** to proceed.

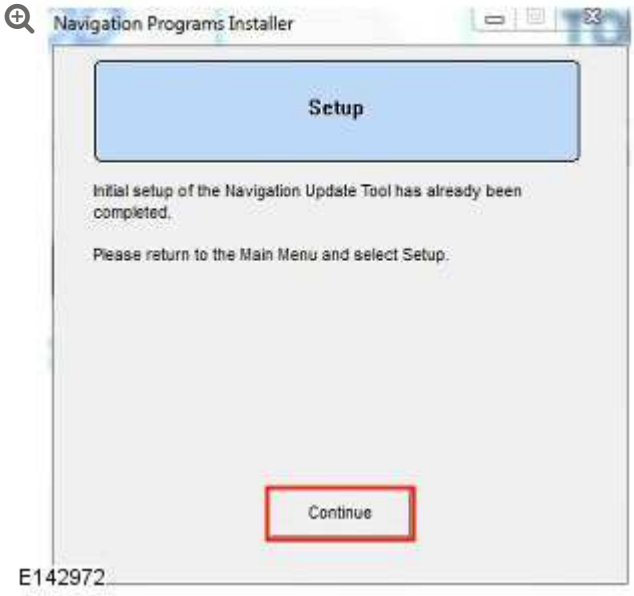

- The navigation update tool will return to the main menu screen, select **Load Map Data** to proceed.



E142968

- Disconnect, then reconnect the USB cable connecting the navigation update tool to the Jaguar/Land Rover approved diagnostic equipment, select **Continue** to proceed.

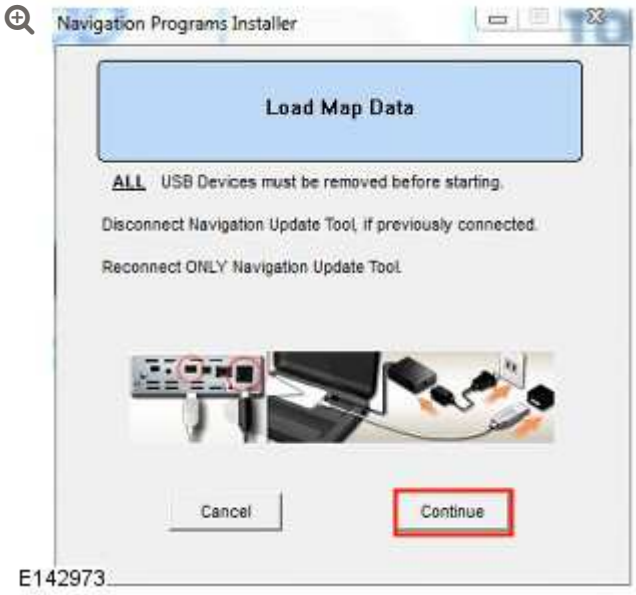

E142973

- The navigation update tool will check the connection.

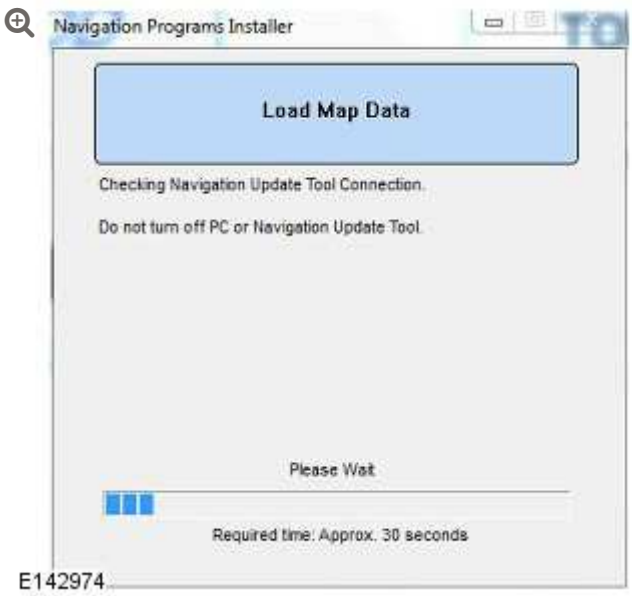

E142974

- Insert map update disk 1 into the DVD drive of the Jaguar/Land Rover approved diagnostic equipment and select **Continue** to proceed.



E142975

- The navigation update tool will read the map data.



E142976

- Map data will be copied from disk 1 to the Jaguar/Land Rover approved diagnostic equipment.



E142977

- Insert map update disk 2 into the DVD drive and press **Continue** to proceed.



- Map data will be copied from disk 2 to the Jaguar/Land Rover approved diagnostic equipment.



- Map data is now ready to be uploaded onto the navigation update tool, press **Continue** to proceed.



- The map data will be uploaded onto the navigation update tool.



- Map data upload is now complete.

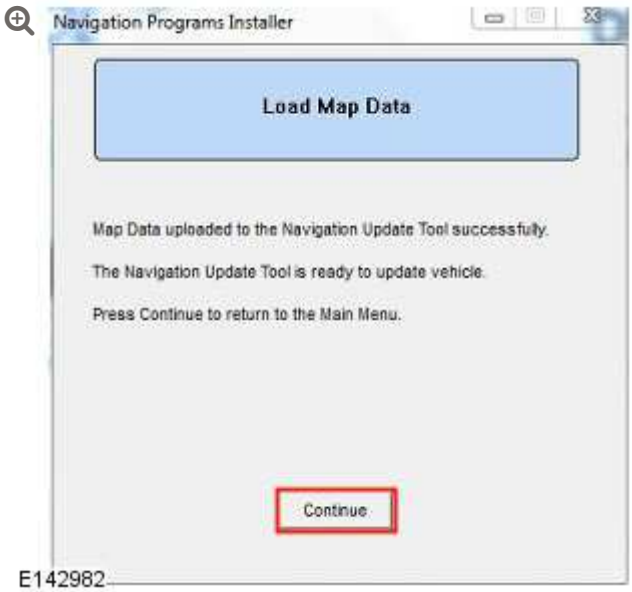

E142982

- Disconnect the navigation update tool from Jaguar/Land Rover approved diagnostic equipment.
- Connect the navigation update tool to the vehicle using the 'firewire' cable.
- Select **Navigation** using the TS display soft key.



E142956

- Select **Navigation Setup** using the TS soft key.



E142957

- Select **Map Change** using the TS.



E142958

- Select map region using the TS display and select **Map Data Update** to proceed.



E142959

- The current map data version and the proposed update map data versions will be shown. Select the relevant region, using the related TS soft key to proceed.



E142960

- Select **OK** to input the licence key using the TS.



E142961

- Input the licence key using the TS display and select **OK** to proceed.



E142962

- Select **OK** using the TS.



E142963

- The map update will begin.



E142964

- When the map update is complete a message will be shown in the TS, select **OK** to proceed using the TS soft key. The navigation system will restart with the new map data.



E142965

- Disconnect the navigation update tool from the vehicle.

USB MAP UPDATES

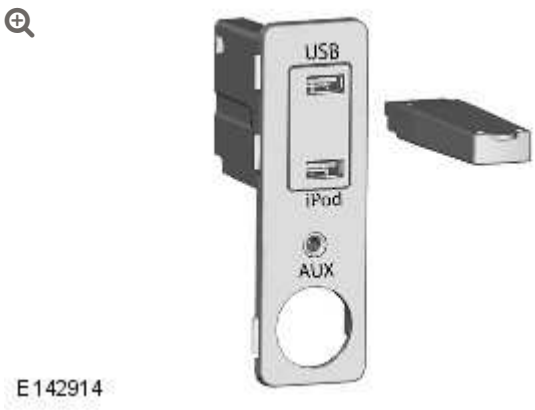

All Gen 2.1 equipped vehicles are supplied with a USB map updates, these updates can be performed by the customer.

The following process should be used to update the map data:

- Start the engine.
- Navigate to the TS **Home Menu** screen.



- Insert the USB memory stick containing the map data into the vehicle USB port.

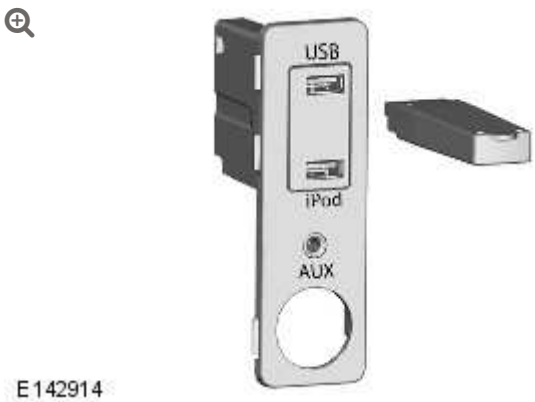

E142914

- Select **Continue** on the TS to proceed with the installation of the map update.



E142917

- Using the TS, enter the licence code and select **OK** to proceed.



E142918

- **NOTE:**

  Selecting 'Cancel' returns to the 'Home Menu' screen, the map update will continue to run in the background

  The map update will begin and a message will be displayed in the TS advising that navigation is unavailable.



E142919

- Map update progress can be viewed as a percentage of the completed download in the **Home Menu** screen.



E142920

- When the update is complete a message is displayed informing the user.



E142921

- The navigation will restart upon completion of the map update.

NOTE:

Remove USB stick immediately



E142922

- Turn off the engine.
- Exit, lock the vehicle and leave for at least 15 minutes before using the navigation system.



E187689

ITEM	DESCRIPTION
1	SD card write protection switch in unlocked position

Before inserting the SD card into the vehicle's navigation data storage device slot, Make sure that the write protection lock is in the 'unlocked' position as shown in the above image.

Make sure that the connections of the SD card are facing upwards before inserting it into the vehicle's navigation data storage device slot as shown in the above image.

InControl Touch Map Updates

The following process should be used to update the map data:

NOTE:

SD cards activated with a particular VIN will only operate in the vehicle with the matching VIN.

- Remove the previously activated SD card from the vehicle's navigation data storage device slot.

- Open the InControl Touch Map Updater. Insert the SD card into the Jaguar Land Rover (JLR) approved diagnostic equipment and follow the on-screen instructions for updating the card.
- After the update has completed remove the SD card from the map updater and insert the updated SD card into the vehicle's navigation data storage device slot.
- Switch the ignition on and Select 'Navigation' (press retry if the system is saying "cannot detect SD card" and the audio head unit will restart).
- Once the system has restarted confirm the map information is correct.

INCONTROL TOUCH PRO MAP INSTALLATION/UPDATES

To update the InControl Touch Pro Map system refer to section 101-01: Pre-Delivery Inspection Manual.

JAPANESE NAVIGATION

The Japanese satellite navigation system uses a separate navigation computer module.

The HDD in the Integrated Audio Module (IAM) is not used for navigation downloads in this market.

Map updates are supplied in DVD format. The DVD is loaded into the navigation control module. Map data is read directly from the DVD.

SD CARD NAVIGATION UPDATES (ASIA NAVIGATION)

The Asia market navigation system is an aftermarket unit.

Map updates are supplied in an SD card format. The SD card is loaded into the navigation control module. Map data is read directly from the SD card.

NOTE:

The following countries use SD card navigation updates.

COUNTRY
ANGOLA
ARGENTINA
AZERBAIJAN
BAHAMAS
BARBADOS
BENIN
BOTSWANA
BRAZIL
BRUNEI
BURUNDI
CAYMAN ISLANDS
CHILE
CHINA
COLOMBIA
EGYPT
FIJI
GHANA
HONG KONG
INDIA

COUNTRY
INDONESIA
ISRAEL
JAMAICA
KENYA
LEBANON
LESOTHO
MALAWI
MALI
MAURITIUS
MONGOLIA
MOROCCO
MOZAMBIQUE
NAMIBIA
NIGER
NIGERIA
PERU
PHILIPPINES
RWANDA
SENEGAL
SOUTH AFRICA
SRI LANKA
SAINT LUCIA
SWAZILAND
TAIWAN
TANZANIA
THAILAND
TOGO

COUNTRY
TUNISIA
UGANDA
URUGUAY
VENEZUELA
VIETNAM
ZAMBIA
ZIMBABWE

2012.0 RANGE ROVER (LM), 415-00

INFORMATION AND ENTERTAINMENT SYSTEM – GENERAL INFORMATION

DIAGNOSIS AND TESTING

PRINCIPLES OF OPERATION

For a detailed description of the navigation system and operation, refer to the relevant Description and Operation section of the workshop manual.
REFER to: Navigation System (419-07 Navigation System, Description and Operation).

INSPECTION AND VERIFICATION

CAUTION:

Diagnosis by substitution from a donor vehicle is **NOT** acceptable. Substitution of control modules does not guarantee confirmation of a fault and may also cause additional faults in the vehicle being checked and/or the donor vehicle.

1. Verify the customer concern.

2. Visually inspect for obvious signs of mechanical or electrical damage.

Visual Inspection

ELECTRICAL

▪ Battery
▪ Fuses
  ▪ Central Junction Box
  ▪ Battery Junction Box
  ▪ Megafuses
▪ Wiring harness
▪ Damaged, loose or corroded connectors
▪ Touch Screen (TS)
▪ GPS antenna
▪ TV antenna
▪ Satellite antenna
▪ FM antenna
▪ Rear view camera
▪ Microphone
▪ Accessory USB unit
▪ Steering wheel controls
▪ Clock spring
▪ Integrated Head Unit (IHU)
▪ Audio Amplifier Module (AAM)
▪ Anti-lock Brake System (ABS) control module
▪ Wheel speed sensors
▪ Vehicle Information and Communication System (VICS) receiver - Japan only
▪ VICS beacon antenna - Japan only
▪ Controller Area Network (CAN) circuits
▪ Media Oriented System Transport (MOST) system
▪ Gigabit Video Interface (GVIF)
▪ Central Junction Box (CJB)
▪ Terrain Response (TR)

ELECTRICAL

- Mobile telephone

3. If an obvious cause for an observed or reported concern is found, correct the cause (if possible) before proceeding to the next step.

4. If the cause is not visually evident, verify the symptom and refer to the Symptom Chart.

TOUCH SCREEN (TS) AND NAVIGATION DIAGNOSTICS

Fault codes and diagnostics can be retrieved/achieved using the manufacturer approved diagnostic system

Hard Key Test

The hard key test is used to check the operation of the hard switches.

If switch operation is normal, the switch colour on the screen will change when a hard switch is pressed. (Power switch operation cannot be checked on this screen.)

Touch Switch Test

The touch switch test calibrates the touch switch coordinates and checks touch switch operation.

Start Calibration - Calibrates the switch coordinates. Calibrate the coordinates by touching each of the "+" marks in the four corners of the screen.

NOTE:

Do not touch any locations other than the "+" marks.
(Touching other locations may invalidate the calibration.)

Touch Switch Check - Checks for deviation in the coordinates. Check the coordinates of the touched location by verifying the displayed values. Touch and hold "press here" to return to the previous screen. If there is a large deviation in the coordinates, calibrate the touch switch using the "Start Calibration" function.

DTC Information

Search for the meaning of the displayed DTC.

Vehicle Configuration

Display the status of each vehicle system.

Speed Lock Configuration - Display the status of compulsory navigation settings (setting status of switches that cannot be operated) when driving.

Configurations

Display primary system information.

Vehicle Signals

Display the status of vehicle signals inputted to the Touch Screen (TS). These signals include:

- Lights (on or off)
- Ambient light sensor voltage
- Backlight dimming duty

- Graphic illumination dimming duty
- Vehicle speed, GPS speed, MOST km/h
- Battery voltage
- Reverse gear / park brake position (electric park brake on or off)
- Speed inhibit
- MOST Fibre Optic Transceiver (FOT) temperature
- Output audio allocation

Video Inputs Test

This screen will allow the testing of video inputs that are connected to the Touch Screen (TS). These include:

- Rear view / proximity camera
- TV/DVD

Self Test

Performs system self-diagnosis and displays the diagnostic results.

If an abnormality is present, a DTC is displayed.

MOST Test

Display the MOST connection status, and reception/transmission messages related to MOST.

"Mpr" displays the number of MOST devices existing on MOST. When "0" or "1" is displayed, communication is not possible.

Colour bar

This function allows the technician to test the colours generated by the TSD. A second screen displays six solid colours, selecting the

colour will fill the screen with the chosen colour and pressing the TSD again will revert back to the colour test screen.

Loading

Update the navigation program.

For details on the update method, refer to the "Navigation Update Tool" operation manual.

HDD information

Display information on the Hard Disc Drive (HDD).

SMART test (Self-Monitoring Analysis and Reporting Technology) is initiated from this screen

Vehicle information

Display information on the vehicle.

- Car configuration - Displays information on vehicle environment settings.
  - Unit (distance) - Units of distance
  - Unit (time) - Units of time
  - Language - Displayed language
  - Fuel information - Remaining fuel quantity
  - Mileage information - Vehicle mileage display
  - Time information - Current time display
  - Override information - Status of switch operation inhibitions (Setting status of switches that cannot be operated.)
- GPS information - Display GPS related information.

- Received position - Displays the latitude and longitude (displayed in degrees, minutes, and seconds) for the position information calculated by GPS.
- Map matched position - Displays the latitude and longitude (displayed in degrees, minutes, and seconds) for the position information being used for map matching.
- Satellites - Number of acquired satellites.
- Current address - Address of the current location.
- Satellite Information - Displays satellite information for up to 12 GPS satellite search targets.
- Measurement HDOP - Positioning accuracy.
- Status - Positioning status.
- Date - Displays the current date and time in the following order: day, month, year, hour, minute, second. The year is displayed using the four-digit western calendar; time is displayed in Greenwich Mean Time (GMT).

- Vehicle sensor - Display vehicle signals inputted to the Touch Screen (TS).
  - REV - Reverse signal status.
  - Speed - Current vehicle speed.
  - Speed pulse count - Speed pulse count value.
  - Distance calibration - Learning information for distance calibration.
  - Voltage/Offset - Gyro sensor output voltage value/voltage correction value.
  - Relative bearing - Relative bearing (0° when navigation is started.)
  - Gyro sense - Learning value for gyro sensitivity.

    - Reset - Resets the gyro sensor relative bearing value.
- RDS-TMC information - Display RDS-TMC related information.
    - Date/time (GMT) - Date and time for the TMC signal.
    - Frequency - TMC signal frequency.
    - PI code - Personal identification code for the broadcast station.
    - PS name - Broadcast station name.
    - Country code - Database country code.
    - LTN - Database location number (location table number.)
    - Service ID - Service provider identification number.
    - Air data - TMC data.

Microphone

Check the volume for the voice recognition microphone inputted to the Touch Screen (TS). These include:

- PTT switch status - Checks the PTT switch connection. When the PTT switch is pressed, a signal will be outputted, and the indicator displays in green.
- Microphone input level judging - If a sampling of the user's voice command is at or above the threshold value, the indicator displays in blue.
- Microphone level - Displays the microphone input level.

Voice output check

Check the audio output.

- ON (Normal) - Outputs ADPCM voice (1 kHz sine wave) for five seconds.
- ON (Max) - Outputs ADPCM voice (maximum 1 kHz sine wave) for five seconds.

SYMPTOM CHART

SYMPTOM	POSSIBLE CAUSE	ACTION
Black screen (navigation and audio screens do not display.)	▪ Temperature in passenger compartment too low ▪ Condensation in passenger compartment ▪ Electrical harness open/short circuit, disconnected ▪ Component failure	▪ GO to Pinpoint Test **A.**
The navigation screen does not display, even when the "NAVIGATION" button is pressed (screen does not change.)	▪ Electrical harness open/short circuit, disconnected ▪ Component failure	▪ GO to Pinpoint Test **B.**
The hard switches do not respond.	▪ Component failure ▪ Switch failure	▪ GO to Pinpoint Test **C.**
The audio screen cannot be operated (does not display.)	▪ Media Oriented System Transport (MOST) system ▪ Electrical harness open/short circuit, disconnected	▪ GO to Pinpoint Test **D.**
The screen does not dim.	▪ Electrical harness open/short circuit, disconnected ▪ Component failure	▪ GO to Pinpoint Test **E.**
Noise on the screen, screen colour is abnormal.	▪ Electrical harness open/short circuit, disconnected ▪ Component failure	▪ GO to Pinpoint Test **F.**

SYMPTOM	POSSIBLE CAUSE	ACTION
The touch switches do not respond.	▪ Electrical harness open/short circuit, disconnected ▪ Component failure	▪ GO to Pinpoint Test **G.**
There is considerable deviation between the displayed vehicle position and the actual position.	▪ Electrical harness open/short circuit, disconnected ▪ Component failure	▪ GO to Pinpoint Test **H.**
The GPS no reception mark does not disappear.	▪ Electrical harness open/short circuit, disconnected ▪ Component failure ▪ No reception from satellite	▪ GO to Pinpoint Test **I.**
No sound is emitted.	▪ Electrical harness open/short circuit, disconnected ▪ Component failure ▪ Incorrect system settings	▪ GO to Pinpoint Test **J.**
There is no navigation voice guidance.	▪ Volume level set too low ▪ The amplifier and speakers are incorrectly connected	▪ GO to Pinpoint Test **K.**
Voice recognition does not function.	▪ Electrical harness open/short circuit, disconnected ▪ Component failure	▪ GO to Pinpoint Test **L.**
The vehicle position rotates randomly.	▪ Electrical harness open/short circuit, disconnected ▪ Component failure ▪ Vehicle on a turntable in a parking building	▪ GO to Pinpoint Test **M.**

SYMPTOM	POSSIBLE CAUSE	ACTION
The vehicle mark display is unstable.	▪ Electrical harness open/short circuit, disconnected ▪ Component failure ▪ No reception from satellite	▪ GO to Pinpoint Test **N.**
The vehicle position does not update.	▪ HDD contaminated/damaged ▪ Electrical harness open/short circuit, disconnected ▪ Component failure	▪ GO to Pinpoint Test **O.**
The map display is incomplete.	▪ HDD contaminated/damaged ▪ Electrical harness open/short circuit, disconnected ▪ Component failure	▪ GO to Pinpoint Test **P.**
Calls cannot be received or placed with Bluetooth®; Bluetooth® cannot connect with the vehicle.	▪ Incompatible Bluetooth® telephone ▪ Incorrect initial connection settings ▪ Electrical harness open/short circuit, disconnected ▪ Component failure	▪ GO to Pinpoint Test **Q.**
The map cannot be updated.	▪ Refer to the "Navigation Update Tool" operation manual	▪ Refer to the "Navigation Update Tool" operation manual
An error screen displays on the navigation screen.	▪ Access to the map data has not been granted	▪ GO to Pinpoint Test **R.**

SYMPTOM	POSSIBLE CAUSE	ACTION
The dual view cannot be switched.	▪ Incorrect car configuration data received ▪ Media Oriented System Transport (MOST) system ▪ Component failure	▪ GO to Pinpoint Test **S.**

PINPOINT TESTS

NOTES:

- If the control module or a component is suspect and the vehicle remains under manufacturer warranty, refer to the Warranty Policy and Procedures manual (section B1.2), or determine if any prior approval Program is in operation, prior to the installation of a new module/component.
- The built in diagnostics are accessed as follows:
  - 1.With the vehicle at rest, place the ignition switch "ON", or start the engine.
  - 2. Press and hold the TSD in the centre at the top of the screen for approximately 5 seconds and then press and hold the TSD at the top left corner of the screen for approximately 5 seconds.
  - 3. A 'Diag PIN Entry' box will appear' Type in the access code 753.
  - 4.Once this code has been accepted the Diagnostic Menu screen will be displayed.

PINPOINT TEST A : BLACK SCREEN (NAVIGATION AND AUDIO SCREENS DO NOT DISPLAY.)
DETAILS/RESULTS/ACTIONS

PINPOINT TEST A : BLACK SCREEN (NAVIGATION AND AUDIO SCREENS DO NOT DISPLAY.)	
TEST CONDITIONS	
A1: THE SCREEN SAVER FUNCTION WORKS	
	1 Check the screen saver function works.
	Does the screen saver function work? **Yes** Operation is normal. **No** Proceed to the next step.GO to A2.
A2: THE DISPLAY BACKLIGHT EMITS LIGHT	
	1 Check the display backlight emits light.
	Does the display backlight emits light? **Yes** Proceed to the next step. **No** GO to A12.
A3: THE SCREEN IS TURNED OFF	
	1 Check the screen is not turned off.
	Do the navigation and audio screens display when the screen is turned on? **Yes** Operation is normal. **No** GO to A4.
A4: THE VEHICLE INTERIOR TEMPERATURE IS -20°C OR LESS	
	1 Check the cabin internal temperature.
	Is the cabin internal temperature -20°C or lower? **Yes** Raise the cabin internal temperature, re-test the vehicle. **No** GO to A5.
A5: CONDENSATION IS FORMING INSIDE THE VEHICLE	
	1 Check for condensation occurring inside the passenger compartment.
	Is condensation occurring inside the passenger compartment? **Yes**

PINPOINT TEST A : BLACK SCREEN (NAVIGATION AND AUDIO SCREENS DO NOT DISPLAY.)	
	Dry out the passenger compartment, re-test the vehicle. **No** GO to A6.
A6: THE LED FOR THE POWER SUPPLY BUTTON IS FLASHING. (RANGE ROVER ONLY)	
	1 Check the status of the audio power button LED.
	Is the audio power button flashing? **Yes** Carry out MOST Ring diagnostics to locate fault. **No** GO to A7.
A7: ONLY THE NAVIGATION SCREEN OR AUDIO SCREEN IS BLACK	
	1 Check to see if only the navigation screen is blank.
	Is only the navigation screen blank? **Yes** Check and install a new Touch Screen Display (TSD) as required. Refer to the new module/component installation note at top of DTC Index. **No** GO to A8.
A8: ONLY THE BACK MONITOR SCREEN IS BLACK	
	1 Check to see if only the audio screen is blank.
	Is only the audio screen blank? **Yes** Proceed to the next step. **No** GO to A10.
A9: AFTER INITIATING THE "VIDEO INPUT TEST" DIAGNOSIS, VIDEO CAN BE DISPLAYED	
	1 Carry out the "Video Input Test" diagnosis' (PIN code 753).
	Are the results of the "Video Input Test" diagnosis' normal? **Yes** Re-check the system. **No** Refer to the electrical circuit diagrams and check the cameras control module.
A10: ONLY THE TV SCREEN IS BLACK	

PINPOINT TEST A : BLACK SCREEN (NAVIGATION AND AUDIO SCREENS DO NOT DISPLAY.)	
	1 Check to see if only the TV screen is black.
	Is only the TV screen blank? **Yes** Proceed to the next step. **No** GO to A12.
A11: AFTER INITIATING THE "VIDEO INPUT TEST" DIAGNOSIS, VIDEO CAN BE DISPLAYED	
	1 Carry out the "Video Input Test" diagnosis' (PIN code 753).
	Are the results of the "Video Input Test" diagnosis' normal? **Yes** Re-check the system. **No** Refer to the electrical circuit diagrams and check the TV control module.
A12: THE CONNECTIONS BETWEEN THE VISUAL NAVIGATION AND POWER SUPPLY WIRING HARNESS AND CONNECTORS ARE CORRECT	
	1 Check the display and power supply harness, power, auxiliary and ground circuits, for short, open circuits and are correctly connected.
	Was a fault identified with the display and power supply harness, power auxiliary and ground connections? **Yes** Rectify the fault and re-test the vehicle. **No** Check and install a new Touch Screen Display (TSD) as required. Refer to the new module/component installation note at top of DTC Index.

NOTE:

When re-confirming the symptoms after inspecting the wiring harness/connector, turn the ignition status to OFF, wait for the Audio power button LED on the display to turn OFF, then turn the ignition status to ON and run the diagnosis again from the beginning.

NOTE:

15 minutes are required for the program to update. If the ignition is accidentally turned OFF, turn the ignition ON again, and wait for 15 minutes.

PINPOINT TEST B : THE NAVIGATION MAP SCREEN DOES NOT DISPLAY, EVEN WHEN THE "NAVIGATION" BUTTON IS PRESSED (SCREEN DOES NOT CHANGE.)	
When re-confirming the symptoms after inspecting the wiring harness/connector, turn the ignition status to OFF, wait for the Audio power button LED on the display to turn OFF, then turn the ignition status to ON and run the diagnosis again from the beginning.	
TEST CONDITIONS	**DETAILS/RESULTS/ACTIONS**
B1: NO RESPONSE TO PRESSING NAVIGATION MENU	
	1 Check that the ignition was not turned 'OFF' during a navigation software update.
	Was the ignition turned 'OFF' during a navigation software update? **Yes** Wait for 15 minutes with the ignition ON. Then turn the ignition to OFF then ignition ON. **No** Refer to electrical circuit diagrams and check integrity of navigation system wiring harness and connectors. GO to B2.
B2: NO RESPONSE TO PRESSING NAVIGATION MENU	
	1 Wait for 15 minutes with the ignition ON. Then turn the ignition to OFF then ignition ON.
	Does the navigation screen displays when the "NAVIGATION" button is pressed. **Yes** Operation is normal. **No** Check and install a new Touch Screen Display (TSD) as required. Refer to the new module/component installation note at top of DTC Index.

PINPOINT TEST C : THE HARD SWITCHES DO NOT RESPOND.	
TEST CONDITIONS	DETAILS/RESULTS/ACTIONS
C1: CHECK FOR FOREIGN OBJECTS	
	1 Check for foreign objects near to the button.
	Are there any foreign objects close to the button causing it to be pressed? **Yes** Remove foreign objects and re-test vehicle. **No** GO to C2.
C2: DISPLAY DIAGNOSTICS CHECK	
	1 Check to see if the display diagnostics can be displayed.
	Can the display diagnostics be displayed? **Yes** Proceed to the next step. **No** Check and install a new Touch Screen Display (TSD) as required. Refer to the new module/component installation note at top of DTC Index.
C3: HARD KEY TEST	
	1 Carry out the display diagnostics hard key test.
	Is the operation normal when carrying out the display diagnostics hard key test? **Yes** Operation is normal. **No** Check and install a new Touch Screen Display (TSD) as required. Refer to the new module/component installation note at top of DTC Index.

PINPOINT TEST D : THE AUDIO SCREEN CANNOT BE OPERATED (DOES NOT DISPLAY.)	
TEST CONDITIONS	DETAILS/RESULTS/ACTIONS
D1: CD CHANGER CHECK	
	1 Check to see if a CD changer is installed.
	Is a CD changer installed? **Yes**

PINPOINT TEST D : THE AUDIO SCREEN CANNOT BE OPERATED (DOES NOT DISPLAY.)	
	Proceed to the next step. **No** Normal operation, CD screen will not be displayed when there is no CD changer installed.
D2: THE AUDIO SCREEN DISPLAYS WHEN THE "AUDIO VIDEO" HARD SWITCH IS PRESSED.	
	1 The audio screen displays when the "AUDIO VIDEO" hard switch is pressed.
	Does the audio screen displays when the "AUDIO VIDEO" hard switch is pressed? **Yes** Proceed to the next step. **No** Refer to the hard switches do not respond diagnosis.
D3: THE AUDIO SCREEN DISPLAYS WHEN "AUDIO VIDEO" ON THE "HOME MENU" IS PRESSED.	
	1 The audio screen displays when "Audio Video" on the "Home Menu" is pressed.
	Does the audio screen displays when "Audio Video" on the "Home Menu" is pressed? **Yes** Proceed to the next step. **No** Refer to the touch switches do not respond diagnosis.
D4: EACH SWITCH (AM FM, CD, IPOD/USB, TV/DVD.) ON THE AUDIO SCREEN RESPONDS.	
	1 Each switch (AM FM, CD, iPod/USB, TV/DVD.) on the audio screen responds.
	Does each switch (AM FM, CD, iPod/USB, TV/DVD.) on the audio screen respond? **Yes** Carry out MOST Ring diagnostics to locate fault. **No** GO to D5.
D5: THE IGNITION IS TURNED FROM IGNITION ON TO OFF, AND AFTER WAITING FOR APPROXIMATELY 30 SECONDS, THE TOUCH SCREEN DISPLAY (TSD) POWER SUPPLY LED WENT OUT. WHEN THE IGNITION IS TURNED TO ON, THE AUDIO SCREEN CAN BE OPERATED.	
	1

PINPOINT TEST D : THE AUDIO SCREEN CANNOT BE OPERATED (DOES NOT DISPLAY.)	
	The ignition is turned from Ignition ON to OFF, and after waiting for approximately 30 seconds, the Touch Screen Display (TSD) power supply LED went out.
	When the ignition is turned to ON, can the audio screen be operated? **Yes** Operation is normal. **No** Carry out MOST Ring diagnostics to locate fault.

PINPOINT TEST E : THE SCREEN DOES NOT DIM.	
TEST CONDITIONS	DETAILS/RESULTS/ACTIONS
E1: CHECK FOR FOREIGN OBJECTS	
	1 Check for foreign objects adhered to the display light sensor. ▪ Range Rover - Top right of display ▪ Discovery/Range Rover Sport - Instrument panel
	Are there any foreign objects adhered to the display light sensor? **Yes** Remove foreign objects and re-test vehicle. **No** GO to E2.
E2: DISPLAY LIGHT SENSOR CHECK	
	1 Check to see if display screen switches to low light when sensor is covered.
	Does the display screen switch to low light when the sensor is covered? **Yes** Operation is normal. **No** GO to E3.
E3: VEHICLE LIGHT SWITCH TESTS	
	1 Check to see if display screen switches to low light when the vehicle light switch is pressed.
	2

PINPOINT TEST E : THE SCREEN DOES NOT DIM.	
	When the vehicle exterior lights are switched on, check diagnostic menu "Vehicle Signals" lights on the diagnostics screen is "ON."
	Does the display screen switch to low light when the vehicle light switch is pressed? **Yes** Operation is normal. **No** Check and install a new Touch Screen Display (TSD) as required. Refer to the new module/component installation note at top of DTC Index.

PINPOINT TEST F : NOISE ON THE SCREEN; SCREEN COLOUR IS ABNORMAL.	
TEST CONDITIONS	DETAILS/RESULTS/ACTIONS
F1: DISPLAY POWER AND GROUND CHECKS	
	1 Refer to electrical circuit diagrams and check battery power and power ON relay voltage, and ground resistance.
	Is the battery power and power ON relay voltage between 10.5 and 16 volts, and continuity to ground? **Yes** Proceed to the next step. **No** Check and rectify the vehicle wiring harness and connectors.
F2: CONTRAST CHECK	
	1 Check to see if the screen colour is normal when the screen setting (contrast) is re-ret to the default values.
	Is the screen colour normal with the default values? **Yes** Operation is normal. **No** GO to F3.
F3: CABIN INTERNAL TEMPERATURE CHECK	
	1 Check the cabin internal temperature.
	Is the cabin internal temperature -20°C or lower? **Yes** Raise the cabin internal temperature and re-test. **No**

PINPOINT TEST F : NOISE ON THE SCREEN; SCREEN COLOUR IS ABNORMAL.	
	GO to F4.
F4: ADDITIONAL SCREEN CHECKS	
	1 Check all other screens.
	Are all other screens beside the navigation display screen normal? **Yes** Check and install a new Touch Screen Display (TSD) as required. Refer to the new module/component installation note at top of DTC Index. **No** GO to F5.
F5: COLOUR BAR CHECK	
	1 Carry out the display diagnostics colour bar check test.
	Are the results of the display diagnostics colour bar check normal? **Yes** Operation is normal. **No** Check and install a new Touch Screen Display (TSD) as required. Refer to the new module/component installation note at top of DTC Index.

PINPOINT TEST G : THE TOUCH SWITCHES DO NOT RESPOND.	
TEST CONDITIONS	DETAILS/RESULTS/ACTIONS
G1: TOUCH SWITCH TEST	
	1 The touch switches not responding on the navigation screen only
	Are the touch switches not responding on the navigation screen only? **Yes** Proceed to the next step. **No** Check and install a new Touch Screen Display (TSD) as required. Refer to the new module/component installation note at top of DTC Index.
G2: TOUCH SWITCH CHECK	
	1

PINPOINT TEST G : THE TOUCH SWITCHES DO NOT RESPOND.	
	Carry out the touch switch check in the display diagnostics.
	Are the results of the display diagnostics touch switch check normal? **Yes** Check the symptoms again.Operation is normal. **No** GO to G3.
G3: START CALIBRATION ROUTINE	
	1 Carry out the start calibration routine from the display diagnostics touch switch test.
	Is normal operation resumed after correction? **Yes** Operation is normal. **No** Check and install a new Touch Screen Display (TSD) as required. Refer to the new module/component installation note at top of DTC Index.

NOTE:

Refer to diagnostic menu "Vehicle Sensor" – Distance Calibration, this value should be approximately 200mm, a large deviation from this value indicates a speed signal fault or incorrect wheel size.

PINPOINT TEST H : THERE IS CONSIDERABLE DEVIATION BETWEEN THE DISPLAYED VEHICLE POSITION AND THE ACTUAL POSITION.	
TEST CONDITIONS	**DETAILS/RESULTS/ACTIONS**
H1: GPS MARK DISPLAY CHECK	
	1 The GPS no reception mark is displayed.
	Is the GPS no reception mark displayed on the display screen? **Yes** Refer to GPS no reception mark does not disappear diagnosis.

PINPOINT TEST H : THERE IS CONSIDERABLE DEVIATION BETWEEN THE DISPLAYED VEHICLE POSITION AND THE ACTUAL POSITION.	
	No GO to H2.
H2: LOCATION CHECK	
	1 Check for symptom occurring in particular locations - parallel roads, elevated roads, loop roads, parking centres (buildings) etc.
	Does the symptom occur in a particular location? **Yes** In places where the vehicle position is hard to specify, the vehicle position may be matched incorrectly and result in position discrepancies. Additionally, a new road layout will mean the Gyro does not match the map position. **No** Proceed to the next step.
H3: DISTANCE CALIBRATION CHECK	
	1 Check to see if distance calibration is being performed.
	Is distance calibration being performed? **Yes** Monitor the condition until distance calibration is complete (drive for over 10km/6.2 miles) **No** GO to H4.
H4: VEHICLE SIGNAL INSPECTION	
	1 Check vehicle sensor display screen, from vehicle information diagnostics menu for the following: vehicle speed signal, REV: ON is indicated when the gear shift lever is in the REV position and gyro sensor input status are normal.
	Are the vehicle speed signal, REV signal, and gyro sensor input status normal? **Yes** GO to H5. **No** Refer to the electrical circuit diagrams and check the integrity of the wiring harness and connectors, and CAN circuit, to the Touch Screen Display (TSD).
H5: TIRE CHECK	
	1 Check to see if new tires have recently been installed.
	Have new tires been recently installed?

PINPOINT TEST H : THERE IS CONSIDERABLE DEVIATION BETWEEN THE DISPLAYED VEHICLE POSITION AND THE ACTUAL POSITION.	
	Yes From the navigation map screen, enter the navigation menu, select navigation setup then select calibration, press 'Distance' then drive the vehicle for 10 to 20 km. Operation will return to normal after performing distance calibration and driving the vehicle for 10 to 20 km. **No** Adjust the current location, and after the GPS no signal mark has disappeared, drive the vehicle for a while to monitor conditions.

NOTES:

- Move the vehicle to an open area, radio waves from satellites may not be received inside buildings.
- Correct the vehicle cursor to the current location.

PINPOINT TEST I : THE GPS NO RECEPTION MARK DOES NOT DISAPPEAR.	
Move the vehicle to an open area, radio waves from satellites may not be received inside buildings.	
Correct the vehicle cursor to the current location.	
TEST CONDITIONS	**DETAILS/RESULTS/ACTIONS**
I1: RETRO-INSTALL INSTALLATIONS CHECK	
	1 Check to see if there are any retro-install installations (anti-theft, radar, etc.)
	Are there any retro-install installations? **Yes** GO to I2. **No** GO to I3.
I2: RETRO-INSTALL INSTALLATIONS RF CHECK	
	1

PINPOINT TEST I : THE GPS NO RECEPTION MARK DOES NOT DISAPPEAR.	
	Turn power supply (including back-up power) to OFF status.
	Does the GPS no reception mark disappear? **Yes** GPS reception may deteriorate when devices receiving radio waves are retro-installed. Alter the position of the retro-install device, and re-test vehicle. **No** GO to I4.
I3: SATELLITE RECEPTION CHECKS	
	1 Check to see if a 'P' or 'T' is displayed in the 'STS' column of the navigation diagnostics GPS information screen after 10 minutes have passed.
	Is a 'P' or a 'T' displayed? **Yes** Wait for reception of another satellite so that position calculation can be performed. **No** Refer to the electrical circuit wiring diagrams and check the integrity of the wiring harness and connectors to the GPS antenna.Proceed to the next step.
I4: GPS ANTENNA REPLACEMENT	
	1 Install a new GPS antenna.
	Does the GPS no signal mark disappears when the GPS antenna is replaced. **Yes** Fault has been rectified. **No** Check and install a new Touch Screen Display (TSD) as required. Refer to the new module/component installation note at top of DTC Index.

PINPOINT TEST J : NO SOUND IS EMITTED.	
TEST CONDITIONS	DETAILS/RESULTS/ACTIONS
J1: SOUND OUTPUT CHECK	
	1 Check sound output across all systems.
	Is there no sound output across all systems? **Yes**

PINPOINT TEST J : NO SOUND IS EMITTED.	
	GO to J2. **No** GO to J3.
J2: VOLUME LEVEL CHECK	
	1 Check the volume level is not set too low.
	Is the volume level set too low? **Yes** Increase the volume level and re-test vehicle. **No** GO to J3.
J3: INTEGRITY OF AMPLIFIER AND SPEAKER WIRING.	
	1 The amplifier and speaker wiring harnesses are correctly connected.
	Are the amplifier and speaker wiring harnesses correctly connected? **Yes** Check the MOST devices.GO to J4. **No** Refer to the electrical circuit diagrams and check integrity of amplifier and speaker wiring harness and connections.
J4: ONLY VOICE RECOGNITION DOES NOT OUTPUT	
	1 Check to see if only voice recognition does not output.
	Is there no output only from the voice recognition? **Yes** GO to J5. **No** Proceed to step 8.
J5: VOICE GUIDANCE	
	1 Check the volume level for voice guidance is not set too low.
	Is the volume level for voice guidance set too low? **Yes** Increase the volume level and re-test vehicle. **No** GO to J6.
J6: VOICE GUIDANCE SETTINGS	
	1 Check to see if the voice guidance is set to 'OFF' in the navigation settings.

PINPOINT TEST J : NO SOUND IS EMITTED.	
	Is the voice guidance set to 'OFF' in the navigation settings? **Yes** Set to 'ON' and re-test the vehicle. **No** GO to J7.
J7: ADDITIONAL ITEMS	
	1 Check to see if the following items apply. ▪ There is no destination set ▪ There is no movement along the route
	Do the two items apply? **Yes** Normal operation, confirm customer symptom and re-test vehicle. **No** Check MOST connection at the Touch Screen Display (TSD), check the MOST devices.Proceed to the next step.
J8: ONLY VOICE RECOGNITION DOES NOT OUTPUT	
	1 Check to see if only voice recognition does not output.
	Is there no output only from the voice recognition? **Yes** Refer to the there is no navigation voice guidance diagnosis. **No** GO to J9.
J9: SOUND IS ONLY ABSENT WHEN USING THE AUDIO SYSTEM OR TELEPHONE.	
	1 Check to see if sound is only absent when using the audio system or telephone.
	Does only the audio system or telephone sound not output? **Yes** Check MOST connection at the Touch Screen Display (TSD), check the MOST devices. **No** Refer to the electrical circuit diagrams and check integrity of wiring harness and connections.

PINPOINT TEST K : THERE IS NO NAVIGATION VOICE GUIDANCE.
DETAILS/RESULTS/ACTIONS

PINPOINT TEST K : THERE IS NO NAVIGATION VOICE GUIDANCE.	
TEST CONDITIONS	
K1: SOUND MISSING AUDIO SYSTEM ONLY	
	1 Sound is only absent from the audio system (CD, radio.)
	Is sound only absent from the audio system (CD, radio.)? **Yes** GO to K4. **No** Proceed to the next step.
K2: VOICE MISSING NAVIGATION SYSTEM ONLY	
	1 Voice is only absent from the navigation system.
	Is voice only absent from the navigation system? **Yes** GO to K3. **No** GO to K3.
K3: NAVIGATION VOICE GUIDANCE CANNOT BE HEARD	
	1 Operate the navigation replay switch and raise the volume.
	Can navigation voice guidance be heard after pressing the navigation replay switch, and raising the volume? **Yes** Operation is normal. **No** Check and install a new Touch Screen Display (TSD) as required. Refer to the new module/component installation note at top of DTC Index.
K4: INTEGRITY OF AMPLIFIER AND SPEAKER WIRING.	
	1 The amplifier and speaker wiring harnesses are correctly connected.
	Are the amplifier and speaker wiring harnesses correctly connected? **Yes** GO to K5. **No** Refer to the electrical circuit diagrams and check integrity of amplifier and speaker wiring harness and connections.
K5: VOLUME LEVEL CHECK	
	1 Check the volume level is not set too low.

PINPOINT TEST K : THERE IS NO NAVIGATION VOICE GUIDANCE.	
	Is the volume level set too low? **No** Increase the volume level and re-test vehicle. **No** Refer to the electrical circuit diagrams and check integrity of complete audio system.

PINPOINT TEST L : VOICE RECOGNITION DOES NOT FUNCTION.	
TEST CONDITIONS	DETAILS/RESULTS/ACTIONS
L1: AUDIO SOUND IS MUTED WHEN PTT SWITCH IS DEPRESSED	
	1 Check to see if the audio sound is muted when the PTT switch is depressed.
	Is the audio sound muted? **Yes** GO to L3. **No** GO to L2.
L2: PTT SWITCH STATUS	
	1 Check to see if the PTT switch status is ok in the navigation diagnostics, manual check, microphone test.
	Is the PTT switch status, in navigation diagnostics, ok? **Yes** Check MOST connection at the Touch Screen Display (TSD), check the MOST devices. **No** Replace the MOST master, or the gateway module.
L3: TALK BACK	
	1 Check to see if there is talk back when other voice recognition demands are executed.
	Is there talk back? **Yes** System operation is normal, (advise change in manner of speech, as incorrect recognition is occurring). **No** GO to L4.
L4: HARNESS/CONNECTOR CHECKS	
	1 Refer to the electrical circuit diagrams and check integrity of Touch Screen Display (TSD) harness and connections.

PINPOINT TEST L : VOICE RECOGNITION DOES NOT FUNCTION.	
	Has a fault been identified with the Touch Screen Display (TSD) harness or connections? **Yes** Rectify the fault and re-test the vehicle. **No** Check and install a new Touch Screen Display (TSD) as required. Refer to the new module/component installation note at top of DTC Index.

PINPOINT TEST M : THE VEHICLE POSITION ROTATES RANDOMLY.	
TEST CONDITIONS	DETAILS/RESULTS/ACTIONS
M1: VEHICLES CURRENT POSITION MARK TURNS ON ITS OWN	
	1 Determine if the ignition status was turned to Auxiliary or On, while the vehicle was on a turntable in a parking building etc.
	Was ignition status set to Auxiliary or On? **Yes** The angular speed of the vehicle at the time of the ignition status change will be logged as the standard value. To re-set the standard value, turn ignition status to 'OFF' then to 'Auxiliary' or 'On' with the vehicle stationary. Re-test the vehicle. **No** Check and install a new Touch Screen Display (TSD) as required. Refer to the new module/component installation note at top of DTC Index.

PINPOINT TEST N : THE VEHICLE MARK DISPLAY IS UNSTABLE.	
TEST CONDITIONS	DETAILS/RESULTS/ACTIONS
N1: VEHICLE SPEED SIGNAL	
	1 The vehicle speed signal is being properly inputted under "Vehicle Sensor" on the "Vehicle information" diagnostics screen.
	Is the vehicle speed input correctly? Note: MOST and navigation system module speeds are approximately the same. **Yes** GO to N2. **No**

PINPOINT TEST N : THE VEHICLE MARK DISPLAY IS UNSTABLE.	
	Carry out MOST ring circuit checks.Check the Anti-Lock Brake System Module for related DTCs and refer to the relevant DTC Index.Carry out network integrity tests using the manufacturer approved diagnostic system. Refer to electrical circuit diagrams and check CAN circuits if required. Repair wiring harness as required.Rectify the fault and re-test the vehicle.
N2: CHECK NUMBER OF SATELLITES	
	1 "0" is displayed in the "Satellites" column under "GPS Information" (on the "Vehicle information" diagnostics screen.)
	Is the number of satellites displayed on the screen 0? **Yes** Refer to GPS no reception mark does not disappear diagnosis. **No** GO to N3.
N3: CHECK IF SYMPTOMS ARE OCCURRING IN PARTICULAR LOCATIONS	
	1 Confirm if the 'car current position not stable' symptom is occurring in particular locations.
	Is the 'car current position not stable' symptom occurring in particular locations? **Yes** System operation is normal. Signal reflections from buildings or a particular location may be responsible. **No** Refer to GPS no reception mark does not disappear diagnosis.

PINPOINT TEST O : THE VEHICLE POSITION DOES NOT UPDATE.	
TEST CONDITIONS	**DETAILS/RESULTS/ACTIONS**
O1: VEHICLE POSITION DOES NOT UPDATE	
	1 Check the GPS no reception mark.
	Has the GPS no reception mark disappeared? **Yes** GO to O2. **No** Refer to GPS no reception mark does not disappear diagnosis.

PINPOINT TEST O : THE VEHICLE POSITION DOES NOT UPDATE.	
O2: VEHICLE POSITION DOES NOT UPDATE	
	1 Check the map screen scroll function.
	Can the map screen be touched scrolled? **Yes** GO to O3. **No** Initiate the "SMART test" on the "HDD information" diagnostics screen.
O3: VEHICLE POSITION DOES NOT UPDATE	
	1 The vehicle speed signal is being properly inputted under "Vehicle Sensor" on the "Vehicle information" diagnostics screen.
	Is the vehicle speed input correctly? Note: MOST and navigation system module speeds are approximately the same. **Yes** Check and install a new Touch Screen Display (TSD) as required. Refer to the new module/component installation note at top of DTC Index. **No** Carry out MOST ring circuit checks.Check the Anti-Lock Brake System Module for related DTCs and refer to the relevant DTC Index.Carry out network integrity tests using the manufacturer approved diagnostic system. Refer to electrical circuit diagrams and check CAN circuits if required. Repair wiring harness as required.Rectify the fault and re-test the vehicle.

PINPOINT TEST P : THE MAP DISPLAY IS INCOMPLETE.	
TEST CONDITIONS	DETAILS/RESULTS/ACTIONS
P1: MAP DISPLAY IS INCOMPLETE	
	1 Check to see if the map screen displays correctly when it is touch scrolled.
	Does the map screen display correctly when it is touch scrolled? **Yes** GO to P2. **No** Initiate the "SMART test" on the "HDD information" diagnostics screen.

PINPOINT TEST P : THE MAP DISPLAY IS INCOMPLETE.	
P2: MAP DISPLAY IS INCOMPLETE	
	1 Check to see if the map screen scale can be reduced.
	Can the map screen scale be reduced? **Yes** GO to P3. **No** Initiate the "SMART test" on the "HDD information" diagnostics screen.
P3: MAP DISPLAY IS INCOMPLETE	
	1 Check to see if a point of interest search can be performed.
	Can a point of interest search be performed? **Yes** Check and install a new Touch Screen Display (TSD) as required. Refer to the new module/component installation note at top of DTC Index. **No** Initiate the "SMART test" on the "HDD information" diagnostics screen.

PINPOINT TEST Q : CALLS CANNOT BE RECEIVED OR PLACED WITH BLUETOOTH®; BLUETOOTH® CANNOT CONNECT WITH THE VEHICLE.	
TEST CONDITIONS	DETAILS/RESULTS/ACTIONS
Q1: DISPLAY CHECK	
	1 Press the telephone button.
	Is 'Telephone not connected' displayed on the screen? **Yes** GO to Q2. **No** Proceed to step 7.
Q2: BLUETOOTH® COMPATIBILITY CHECK	
	1 Check to see if the telephone handset is Bluetooth® compatible.
	Is the telephone handset Bluetooth® compatible? **Yes** GO to Q3. **No** Use a Bluetooth® compatible telephone handset.

PINPOINT TEST Q : CALLS CANNOT BE RECEIVED OR PLACED WITH BLUETOOTH®; BLUETOOTH® CANNOT CONNECT WITH THE VEHICLE.	
Q3: HANDSET POWER CHECK	
	1 Check to see if the handset is switched 'ON'.
	Is the telephone handset switched 'ON'? **Yes** GO to Q4. **No** Switch handset 'ON' and re-test.
Q4: INITIAL CONNECTION SETTINGS	
	1 Check to see if the initial connection settings to the in-vehicle system have been performed.
	Have the initial connection settings to the in-vehicle system been performed? **Yes** GO to Q5. **No** Perform the initial connection settings.
Q5: HANDSET COMMUNICATION CHECK	
	1 Check to see if the telephone handset recognizes the in-vehicle system.
	Does the telephone handset recognize the in-vehicle system? **Yes** GO to Q6. **No** Re-test using a different Bluetooth® compatible telephone handset. If the fault is still evident, suspect the telephone module. Refer to the new module/component installation note at the top of this procedure.
Q6: HANDSET COMMUNICATION CHECK	
	1 Switch the Bluetooth® telephone handset 'OFF' then back 'ON' again.
	Does the telephone handset recognize the in-vehicle system? **Yes** Operation is normal. **No** Suspect the telephone module. Refer to the new module/component installation note at the top of this procedure.
Q7: HANDSET COMMUNICATION CHECK	

PINPOINT TEST Q : CALLS CANNOT BE RECEIVED OR PLACED WITH BLUETOOTH®; BLUETOOTH® CANNOT CONNECT WITH THE VEHICLE.	
	1 Check to see if the telephone is within communications range.
	Is the telephone within a 10 metre range of the bluetooth® telephone module? **Yes** GO to Q8. **No** Move the telephone handset to within a 10 metre range of the Bluetooth® telephone module.
Q8: HANDSET COMMUNICATION CHECK	
	1 Check to see if when transmitting, the telephone handset is also receiving.
	When transmitting, is the telephone handset also receiving? **Yes** Check MOST connection at the Touch Screen Display (TSD), check the MOST devices. **No** Replace the telephone handset.

PINPOINT TEST R : AN ERROR SCREEN DISPLAYS ON THE NAVIGATION SCREEN.	
TEST CONDITIONS	**DETAILS/RESULTS/ACTIONS**
R1: MAP DATA CANNOT BE READ	
	1 Access to the map data has not been granted.
	Has new Touch Screen Display (TSD) been installed? **Yes** Initiate the "Map Lock routine." **No** Check that a valid activation code for the particular map version installed is available and is being used, it may be necessary to purchase a new activation code from Navteq.If the activation code is valid but map cannot be activated, check and install a new Touch Screen Display (TSD) as required. Refer to the new module/component installation note at top of DTC Index.Initiate the "Map Lock routine."

NOTE:

Prior to troubleshooting, verify that the vehicle and the Touch Screen Display (TSD) are compatible with Dual Directional View.

PINPOINT TEST S : THE DUAL VIEW CANNOT BE SWITCHED.	
Prior to troubleshooting, verify that the vehicle and the Touch Screen Display (TSD) are compatible with Dual Directional View.	
TEST CONDITIONS	**DETAILS/RESULTS/ACTIONS**
S1: AUDIO VIDEO HARD SWITCH CHECK	
	1 The audio screen displays when the "AUDIO VIDEO" hard switch is pressed.
	Does the audio screen displays when the "AUDIO VIDEO" hard switch is pressed? **Yes** GO to S2. **No** Refer to the hard switches do not respond diagnosis.
S2: AUDIO SOURCE	
	1 TV or DVD is the audio source.
	Does TV or DVD display? **Yes** GO to S3. **No** Switch the audio source to TV or DVD and carry out diagnosis again.
S3: VIDEO AND SOUND CORRECTLY DISPLAYED	
	1 Video with sound is displayed on the passenger side from the audio screen after the "AUDIO VIDEO" hard switch is pressed.
	Is video with sound displayed on the passenger side from the audio screen after the "AUDIO VIDEO" hard switch is pressed? **Yes** Operation is normal.

PINPOINT TEST S : THE DUAL VIEW CANNOT BE SWITCHED.	
	No GO to S4.
S4: VIDEO AND SOUND INCORRECTLY DISPLAYED	
	1 Video with sound is incorrectly displayed on the passenger side from the audio screen after the "AUDIO VIDEO" hard switch is pressed
	Is video with sound incorrectly displayed on the passenger side from the audio screen after the "AUDIO VIDEO" hard switch is pressed? **Yes** Refer to the black screen (navigation and audio screens do not display) diagnosis. **No** GO to S5.
S5: VEHICLE CONFIGURATION	
	1 The following set values are present on the "Vehicle Configuration" diagnostics screen. ▪ HLDF = Dual view ▪ HLDF is fitted ▪ Hand of Drive is correct for vehicle being tested
	Are values present on the "Vehicle Configuration" diagnostics screen. **Yes** Check and install a new Touch Screen Display (TSD) as required. Refer to the new module/component installation note at top of DTC Index. **No** Contact dealer technical support to assist in re-configuring the Car Configuration File (CCF) using the manufacturers approved diagnostic system. Clear the DTC, switch off the ignition and allow sufficient time for the infotainment relay to power downCheck MOST connection at the Touch Screen Display (TSD), check the MOST devices.

DTC INDEX

For a complete list of all Diagnostic Trouble Codes (DTCs) that could be logged on this vehicle, please refer to Section 100-00.

REFER to: Diagnostic Trouble Code (DTC) Index - DTC: Module

Name: Satellite Digital Audio Radio System Module (100-00 General Information, Description and Operation).

AUDIO UNIT

SPECIFICATIONS

Torque Specifications

DESCRIPTION	NM	LB-FT
Audio unit to audio unit bracket screws	1	1
Compact disc (CD) changer	1	1
Amplifier mounting bracket side bolts	9	7
Amplifier mounting bracket bottom bolts	5	4
Amplifier bolts	5	4
Antenna nuts	6	4

AUDIO UNIT

AUDIO AMPLIFIER (G928044)

REMOVAL AND INSTALLATION

86.50.36	AMPLIFIER - POWER - RENEW	ALL DERIVATIVES	1.1	USED WITHINS	+

REMOVAL

1. Disconnect the battery ground cable.
   For additional information, refer to: Specifications (414-00, Specifications).

2. Remove the information and entertainment module.
   For additional information, refer to: Information and Entertainment Module (419-10, Removal and Installation).

3.

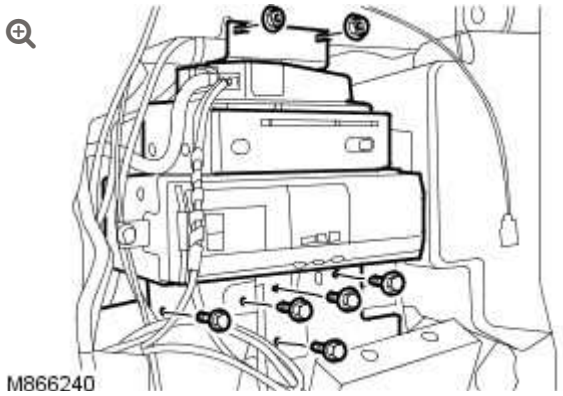

Release the information and entertainment assembly.

- Remove the 5 bolts.
- Remove the 2 nuts.

4.

CAUTION:

Cover fiber optic cable connectors to minimize dust ingress and avoid bending the cables in a radius of less than 30 mm.

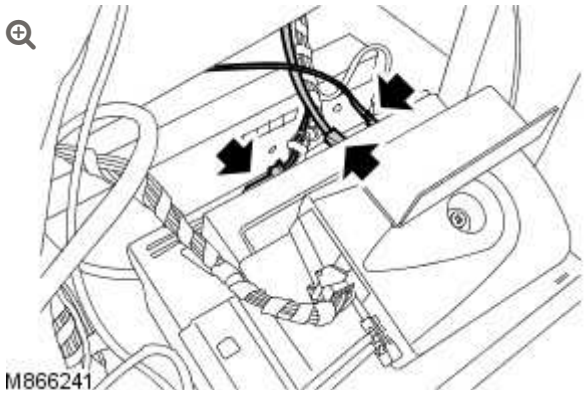

Reposition the information and entertainment assembly for access.

- Disconnect the 2 coaxial cable connectors.
- Disconnect the 3 electrical connectors.
- Disconnect the 3 optical connectors.

5. Remove the information and entertainment assembly.

6. **CAUTION:**

> Cover fiber optic cable connectors to minimize dust ingress and avoid bending the cables in a radius of less than 30 mm.

Remove the satellite radio tuner (NAS variants only).

- Disconnect the optical connector.
- Disconnect the electrical connector.
- Remove the bolt.

7. 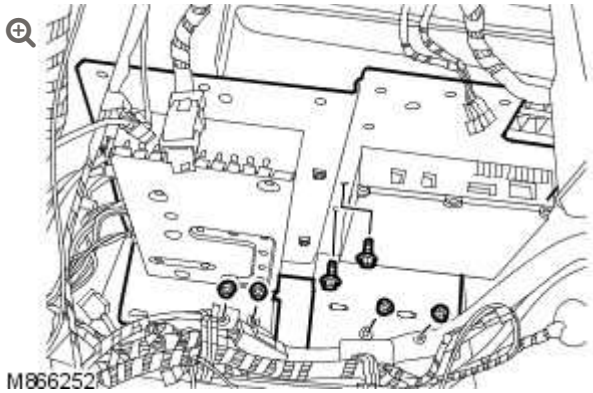

Release the audio unit amplifier and television (TV) receiver assembly.

- Remove the 2 bolts and 4 nuts securing the audio unit amplifier and TV receiver mounting bracket.

8. **CAUTION:**

> Cover fiber optic cable connectors to minimize dust ingress and avoid bending the cables in a radius of less than 30 mm.

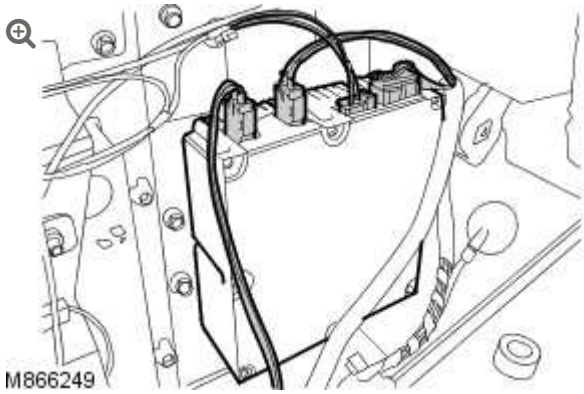

Disconnect the TV receiver connections.

- Disconnect the optical connector.
- Disconnect the 3 electrical connectors.

9.

CAUTION:

Cover fiber optic cable connectors to minimize dust ingress and avoid bending the cables in a radius of less than 30 mm.

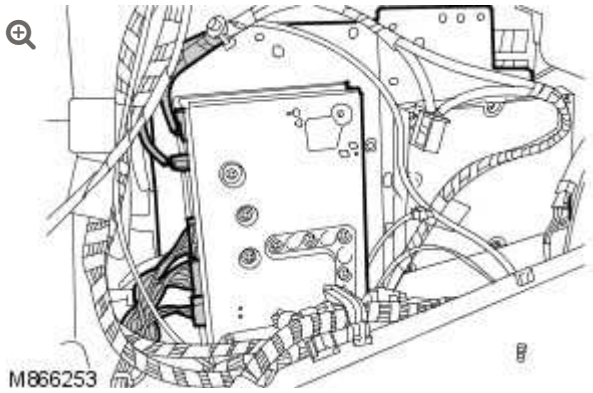

Disconnect the audio unit amplifier connections.

- Disconnect the audio unit amplifier 2 optical connectors.
- Disconnect the 3 electrical connectors.
- Release the wiring harness clip.

10. Remove the audio unit amplifier and TV receiver assembly.

11. Remove the audio unit amplifier.
    - Remove the 4 bolts.

INSTALLATION

1. Install the audio unit amplifier to the mounting bracket.
    - Tighten the bolts to 10 Nm (7 lb.ft).

2. Install the audio unit amplifier and TV receiver assembly.
    - Connect the electrical connectors.
    - Connect the optical connectors.
    - Secure the wiring harness clip.

3. Secure the audio unit amplifier and TV receiver assembly.
    - Tighten the nuts and bolts to 10 Nm (7 lb.ft).

4. Install the satellite radio tuner (NAS variants only).
    - Tighten the bolt to 10 Nm (7 lb.ft).
    - Connect the electrical connector.
    - Connect the optical connector.

5. Install the information and entertainment assembly.
    - Connect the coaxial cable connectors.
    - Connect the electrical connectors.
    - Connect the optical connector.
    - Tighten the bolts to 10 Nm (7 lb.ft).

6. Install the information and entertainment module.
   For additional information, refer to: Information and Entertainment Module (419-10, Removal and Installation).

7. Connect the battery ground cable.
   For additional information, refer to: Specifications (414-00, Specifications).

8. Using the Land Rover approved diagnostic equipment, follow the on-screen instructions and configure the audio unit amplifier.

2012.0 RANGE ROVER (LM), 415-01

AUDIO UNIT

DESCRIPTION AND OPERATION

AUDIO SYSTEM COMPONENT LOCATION

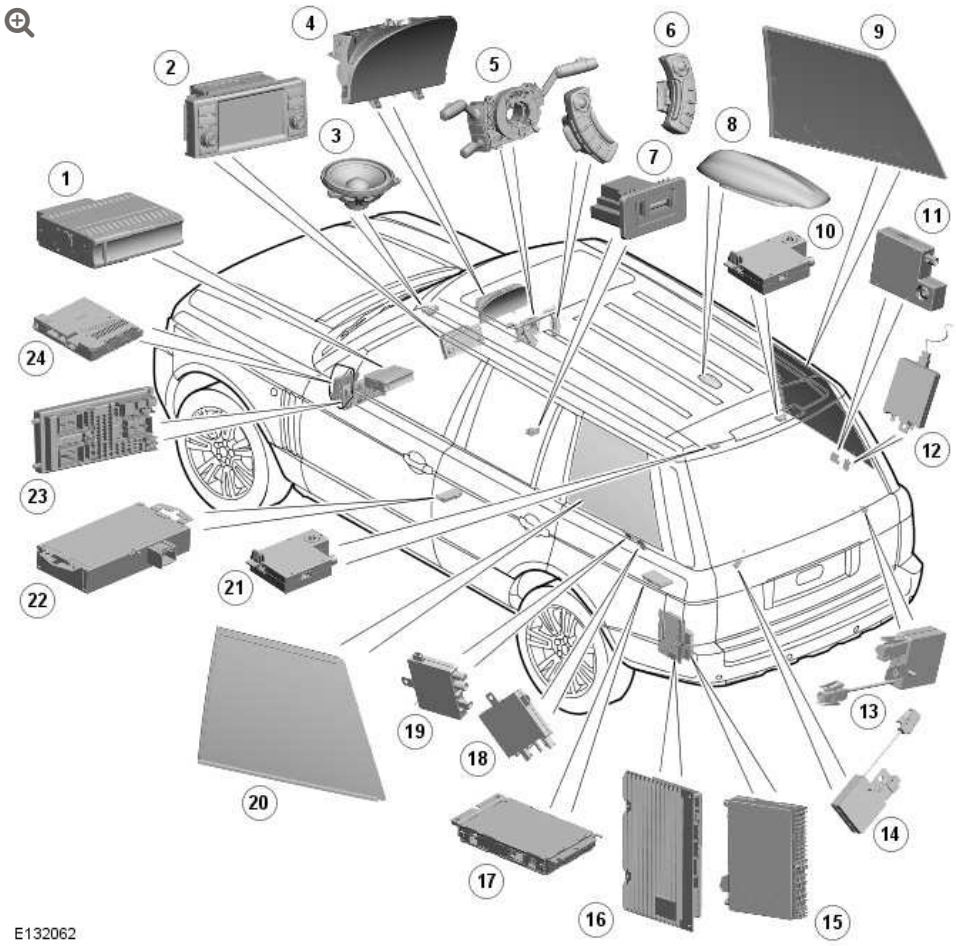

ITEM	DESCRIPTION
1	compact disc (CD) autochanger
2	Touch Screen Display (TSD)

ITEM	DESCRIPTION
3	Speakers
4	Instrument cluster
5	Clock spring
6	Steering wheel switches
7	Portable audio interface
8	Roof pod antenna DAB or SDARS (NAS and Canada only) with / without GPS (Navigation)
9	Right Hand (RH) glass antenna (DAB/TV/Auxiliary park heating)
10	VICS Amplifier (Japan only)) or Traffic Management Channel (TMC)
11	Digital Audio Broadcast (DAB) antenna amplifier
12	RH Rear TV / Auxiliary park heating antenna amplifier (Ref only)
13	Antenna filter
14	Antenna filter
15	Hybrid Digital (HD) radio module
16	Audio amplifier
17	SDARS receiver (NAS only)
18	Left Hand (LH) TV antenna amplifier (Ref only)
19	AM/FM / diversity antenna amplifier
20	LH glass antenna (AM/FM/Diversity/TV)
21	FM antenna amplifier
22	Portable audio module
23	Central Junction Box (CJB)
24	Integrated Head Unit (IHU)

GENERAL

Three levels of the system are available and both systems use the dual view Touch Screen Display (TSD) as their interface. One system is based around a Harman/Kardon DSP audio amplifier while the other two are based around the Harman/Kardon Logic7 and Logic7 HD 1200W Premium audio amplifier.

NOTE:

> Due to legislation, the NAS markets do not receive the dual-view TSD option. A single view TSD is available in these markets. Where markets allow, dual view TSD is available with the Logic7 and Logic7 HD Premium systems.

It is also possible to specify extras to the audio system to extend its capabilities. These options include:

- Telephone
- Satellite navigation
- Television / Teletext
- Voice recognition system (navigation and telephone)
- Rear Seat Entertainment (RSE).
- Digital radio - DAB/SDARS/HD

MOST

The components of the complete audio/infotainment system are all connected on the Media Orientated Systems Transport (MOST) ring. The MOST ring is a fibre optic communications bus for multi media applications. Sound and control information is passed around the MOST ring and can be picked up by any of the systems units. For example, sound information is sent from the CD autochanger along

the MOST ring and is collected by the audio amplifier which then outputs the sound to the speakers.

MOST Components

NOTE:

Not all the components shown are related to the audio system, but form part of the MOST ring.

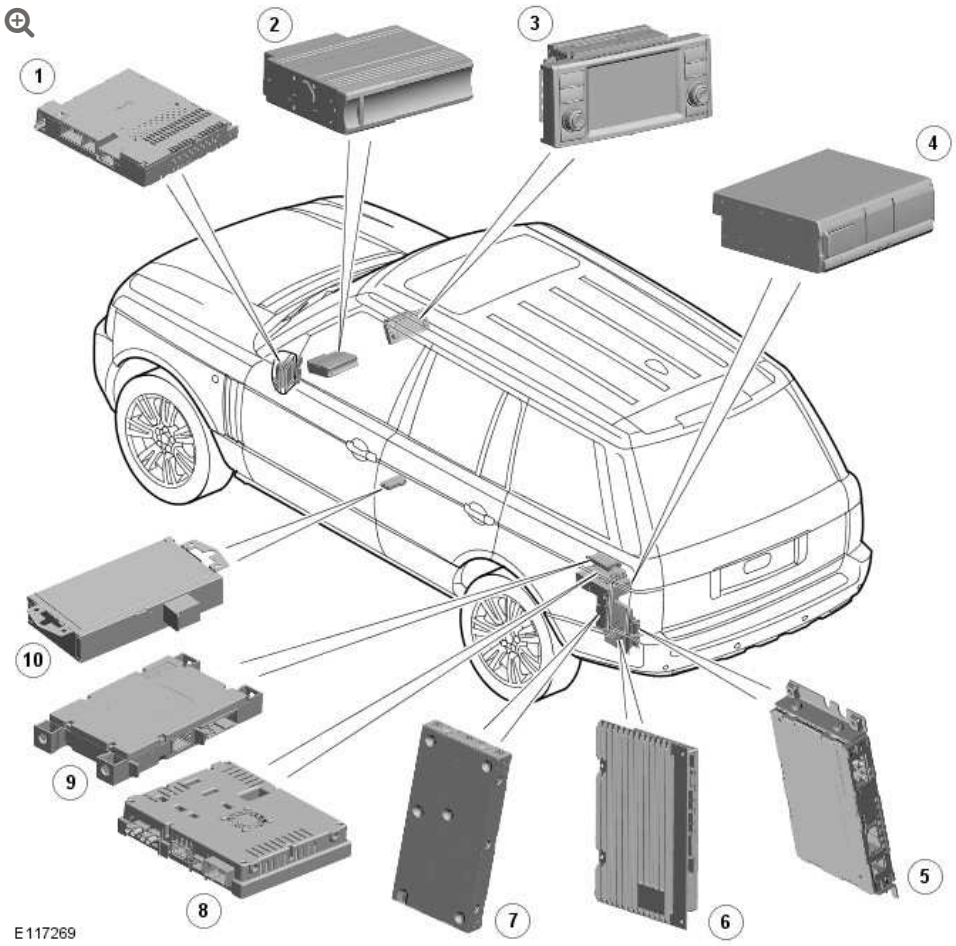

ITEM	DESCRIPTION
1	Integrated Head Unit (IHU)
2	Compact Disc (CD) autochanger
3	Touch Screen Display (TSD)
4	DVD autochanger

ITEM	DESCRIPTION
5	Digital Radio (DAB/SDARS/HD)
6	Audio amplifier
7	Rear Seat Entertainment (RSE) module
8	Television (TV) tuner
9	Telephone module
10	Portable audio module

MOST technology uses a plastic optical fibre which forms a network connecting the audio and multimedia system components. Each component in the ring is connected to the plastic optical fibre through a device known as a Fibre Optical Transceiver (FOT). Each FOT has two optical connections; one connection is sensitive to light and is the input and the second connection forms the light source and is the output. The system operates by connecting the output from one FOT to the input of another FOT.

The light signals are sent in one direction only and are formed in the following way:

- Electrical signals are converted into an electrical current
- The current then drives a light emitting diode (LED) in the FOT to produce a high intensity red light
- The LED transmits the light through a fibre optic cable
- A photo diode in the FOT at the opposite end of the fibre optic cable detects the light.

The following components are connected to the MOST ring:

- Integrated Head Unit (IHU)
- Touch Screen Display (TSD)
- SDARS receiver (NAS and Canada only)

- Digital radio module (DAB and SDARS/HD (NAS and Canada only)
- TV tuner
- Audio amplifier
- Rear Seat Entertainment (RSE) module
- Telephone module
- Portable audio interface module
- CD autochanger.

The IHU is the timing master for the MOST system. The IHU controls and manages the MOST ring and the system components. It is also responsible for the MOST security system. Each component in the MOST ring has a unique serial number. The component serial number is stored in a registry file in the instrument cluster. If any component serial number is not recognized, the entire audio system will not function.

A replaced component requires its serial number to be programmed in the instrument cluster registry using Land Rover approved diagnostic equipment. If the instrument cluster is replaced, the complete system will not function until the instrument cluster is programmed with the component serial numbers using Land Rover approved diagnostic equipment.

MOST DIAGNOSTICS

A light box is used to diagnose the MOST system. The light box emits a visible, high intensity red light which can be connected into the ring at any point to test the ring integrity. The light box is used in conjunction with Land Rover approved diagnostic equipment.

Disconnecting a MOST connector will reveal if the high intensity red light is visible. Do not view the red light directly. If a break occurs in the MOST ring fault codes are stored in the IHU which can be retrieved using Land Rover approved diagnostic equipment.

CENTRAL JUNCTION BOX (CJB) GATEWAY FUNCTION

The CJB (central junction box) incorporates a gateway function. The gateway function is the link between the vehicle bus systems and the audio system MOST ring. When the vehicle is unlocked, the CJB receives a system 'wake-up' message on the controller area network (CAN) bus. This message is then passed to the integrated head unit (IHU) which then 'wakes-up' the MOST ring components by energizing the infotainment relay.

SYSTEM SECURITY

The gateway function stores a unique serial number for each component in the infotainment system. This new system, known as 'Security on MOST' replaces the radio codes used on previous audio systems.

During vehicle production, the serial number of each component is extracted from its memory and stored in the CJB. At every subsequent ignition on cycle, the Integrated Head Unit (IHU) reads the serial number for each component and compares them to the stored serial numbers in the CJB. If an incorrect code detected the MOST system will shut down and the infotainment system will not function.

If an infotainment component is replaced, Land Rover approved diagnostic equipment will be required to disable the security on MOST feature. A file is downloaded which extracts the new serial number from the replacement component and records it in the CJB. Land Rover approved diagnostic equipment is used to re-enable the security on MOST feature and restore the system security.

INFOTAINMENT RELAY

An infotainment relay is located in the CJB. The relay receives a permanent power supply from fusible link 2B in the BJB (battery junction box). The relay coil is controlled by the IHU which provides a ground for the coil. When a vehicle unlocked signal is transmitted on the CAN bus, the message is received by the IHU which provides a ground for the relay, closing the contacts and supplying power to the audio/infotainment system components. The IHU maintains the relay in an energized condition for a period of time after the ignition is in the off mode 0 to allow time for the navigation computer to 'power down' and also to allow a faster system start-up if the system is required subsequently.

AUDIO SYSTEM

Three levels of audio system are available@

The Hi-Fidelity Digital Signal Processor (DSP) Harman Kardon audio system comprises:

- DSP amplifier
- Touch Screen Display (TSD)
- Integrated Head Unit (IHU)
- Six disc CD autochanger
- Portable audio interface
- 11 Speakers

The Hi-Fidelity Logic7 Harman Kardon audio system comprises:

- Logic7 amplifier
- TSD
- IHU
- Six disc CD autochanger

- Portable audio interface
- 14 Speakers

The Hi-Fidelity Logic7 HD 1200W Premium Harman Kardon audio system comprises:

- Logic7 HD 1200W amplifier
- TSD
- IHU
- Six disc CD autochanger
- Portable audio interface
- 19 Speakers (5 co-axial)

The systems have the option of Digital Audio Broadcast (DAB) radio or High Definition (HD) digital broadcast radio or Satellite Digital Audio Radio Service (SDARS) (NAS and Canada only). The DAB and HD options are not available in all markets and are dependent on service availability.

TOUCH SCREEN DISPLAY

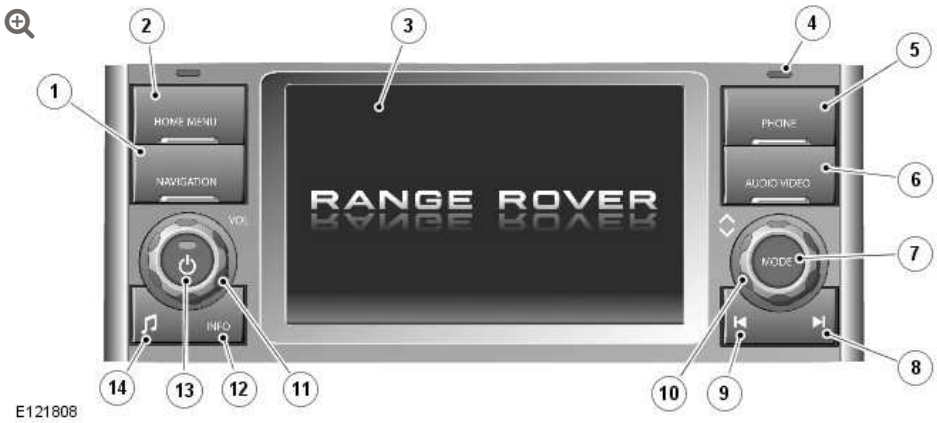

ITEM	DESCRIPTION
1	Navigation
2	Home menu

ITEM	DESCRIPTION
3	Touch screen display
4	Light sensor
5	Telephone
6	Audio/Video
7	Search up/increase
8	Mode
9	Search down/decrease
10	Scroll up/down
11	Volume
12	Information
13	Audio on/off
14	Tone

The Touch Screen Display (TSD) is located in the center of the instrument panel and is the driver control interface for the infotainment system. The TSD is connected to the MOST ring and communicates with the other components in the audio/infotainment system.

The TSD provides driver display and control of the audio system, telephone, the rear view camera, proximity cameras, VentureCam™, the Traffic Message Channel (TMC) and the navigation system.

The TSD also communicates with the RSE module via a co-axial cable. The TSD processes its own video for system operation but receives the video image data from the RSE via the co-axial cable.

The RSE and other systems are operated by a combination of the physical buttons located on each side of the screen and the 'virtual' buttons displayed on the touch screen. For clarification, the physical

buttons are referred to as 'buttons' and the touch screen virtual buttons are referred to as 'icons'.

The TSD is a seven inch touch sensitive, 1280 X 480 pixels LCD (liquid crystal display) VGA screen. The dual-view TSD allows the front seat passenger to view television and video images when the car is being driven. The dual-view screen allows the driver to see the navigation or other system screens but not the TV or video when the vehicle is moving. The screen can be switched between single and dual view using AUDIO VIDEO switch on the TSD.

NOTE:

Due to legislation, the NAS markets do not receive this dual-view option. A single view display is available in these markets.

The dual-view TSD uses Parallax Barrier Shutter Technology to alternately hide and reveal columns of pixels to the left and right hand views of the screen. The display comes with a specially designed agar coating to help prevent sunlight bleaching.

Care should be taken with the TSD to ensure its correct operation:

- The screen should be cleaned with a lightly, water moistened cloth. Do not use chemical agents or domestic products to clean the screen or any part of the surround.
- Only use your finger to operate the touch screen. Ensure you only use one finger to avoid incorrect entries.
- A short light press of the touch screen is sufficient. Excessive pressure can damage the screen.

The TSD also incorporates a 40 GB hard disc drive which is used for storing the navigation data and maps. The disc drive cannot store audio files.

For additional information, refer to: Navigation System (419-07, Description and Operation).

INTEGRATED HEAD UNIT (IHU)

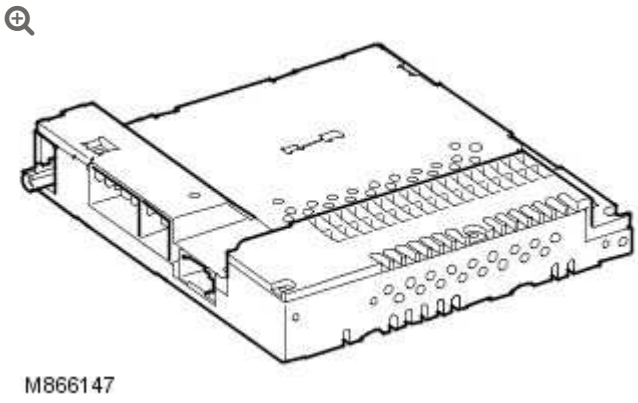

The Integrated Head Unit (IHU) is located behind the glove compartment mounted CD autochanger. The IHU is secured to the instrument panel support frame. The IHU contains the radio functionality for the audio system and communicates on the MOST ring with the components in the audio system. The IHU is also the timing master for the MOST ring. The IHU is the controls and manages the MOST ring and provides the allocations of channels, system power management and the functionality and co-ordination of the other system components.

The IHU also controls the operation of the infotainment relay. The infotainment relay is located in the CJB and the relay coil is controlled by the IHU which provides a ground for the coil. The relay supplies power to a number of the audio system components.

Radio signals are received by antennae located in the left hand rear quarter window and the rear screen. An frequency modulation (FM) antenna amplifier is located in the upper taildoor and passes amplitude modulation (AM)/FM signals from the rear screen antennae to the IHU. A diversity antenna is located in the left hand rear quarter window. A FM diversity antenna amplifier is located behind the left hand luggage compartment trim panel, below the

window and passes FM radio signals from the rear quarter window diversity antenna to the IHU. The FM diversity system uses a multi-antenna system which selects the strongest signals from the antennae. In weak signal areas the amplifier uses an integral ultrasonic noise detector to find the least distorted antenna signal to ensure maximum reception quality is maintained.

Diagnostic messages retrieved via Land Rover approved diagnostic equipment are routed from the IHU through the instrument pack, prior to being transferred to the diagnostic socket.

6 DISC CD AUTOCHANGER

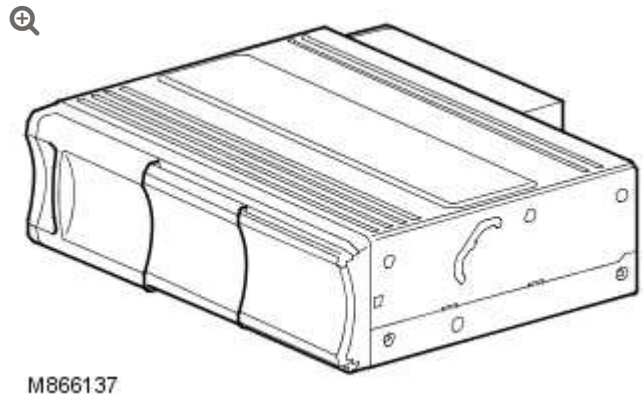

The six disc CD autochanger is located at the rear of the glove compartment. The CD autochanger is a standard fitment on all 2005 MY Range Rovers. The CD autochanger is capable of playing audio CDs and MP3 CDs. The autochanger uses a six disc magazine which is loaded into an aperture on the front of the unit.

The CD autochanger is connected on the MOST ring and receives a permanent fused power supply from the passenger compartment fusebox.

SATELLITE DIGITAL AUDIO RADIO SERVICE (SDARS) (NAS AND CANADA VEHICLES ONLY)

SDARS is a satellite based radio service which is available in the United States of America (USA) and Canada. Digitally encoded audio transmissions are broadcast to receivers from two satellites or from ground based repeater stations. It is possible for the SDARS transmissions to be received in northern Mexico but reception is not guaranteed outside of the USA or Canada.

The service is provided by a company called Sirius. The service comprises over 100 channels of digital entertainment which is provided by subscription requiring a monthly payment.

Operation of the SDARS system is the same as the radio operation with selections made using the TSD icons or controls on the TSD.

The SDARS system requires additional components to be added to the audio system. An SDARS antenna is located in the roof mounted pod and a receiver is located in the LH (left-hand) side of the luggage compartment to allow reception of the service.

The customer must subscribe to receive the SDARS service. If the user selects a channel to which subscription is not authorised, the TSD will display the telephone number of the SDARS providers subscription service. The telephone number is stored in the IHU and can be changed or amended using Land Rover approved diagnostic equipment.

SDARS ANTENNA



E96387

The SDARS antenna is located in the roof pod and is shared with the telephone system and the navigation system where fitted. The roof pod is located externally in a central position towards the rear of the roof.

The roof pod contains two antennas for the SDARS system. One receives the digital transmissions from the SDARS satellites and the second receives transmissions from the ground based repeater stations.

The SDARS antennas are connected to the SDARS receiver using co-axial cables.

SDARS RECEIVER



The SDARS receiver is a dedicated SDARS head unit and tuner which is controlled by the IHU on the MOST ring. The receiver is located in the LH rear of the luggage compartment.

The receiver processes the signals from the SDARS antennas. The signals are filtered and the receiver determines which of the two signals is the strongest with the least distortion to use for the audio output. For example, if the vehicle drives into a tunnel, the receiver will change from a satellite signal to a repeater station signal to maintain the strongest signal.

The receiver also contains software and hardware to allow digital reception in Canada in addition to the USA.

HYBRID DIGITAL (HD) RADIO

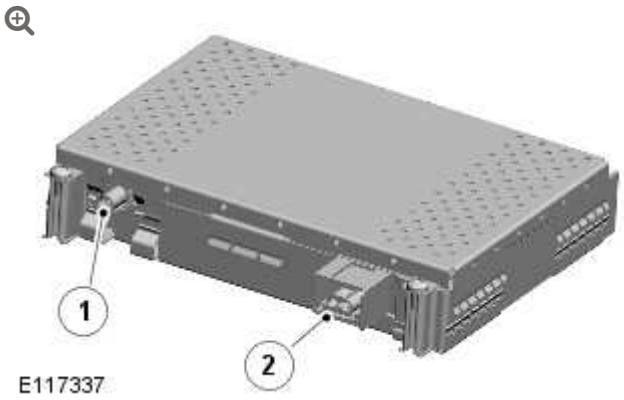

ITEM	DESCRIPTION
1	Antenna connector
2	Power, ground and MOST connector

Hybrid Digital (HD) radio is a ‘free to air’ alternative to the SDARS subscription system. The HD module is designed to receive and convert radio signals transmitted by stations sending out a hybrid signal (both analogue and digital) in both AM and FM frequencies. As it is digital, textual data such as song titles can also be displayed.

HD radio does not require a dedicated antenna. It uses the existing AM/FM antennas. If HD radio is specified to the vehicle, the output

from the antenna amplifier is diverted to the HD module instead of the IHU tuner

NOTE:

> Not all radio stations will provide the HD element of the broadcast.

HD Radio provides digital signals to improve standard AM/FM audio quality. It also provides additional secondary HD channels on FM, when available.

The HD broadcast is carried with an existing AM/FM signal. This means that if the HD signal is unavailable, the analogue (AM/FM) signal is automatically selected.

HD radio stations simultaneously transmits a digital version of the analog broadcast and also provide a second digital channel, which can be used for alternate radio programming or data services such as song information, weather reports and car navigation updates.

HD radio transmits the digital signals in unused portions of the same channel as the analogue AM and FM signals, known as In-Band On-Channel (IBOC). As a result, radios are more easily designed to pick up both signals and tune into the station's analogue (AM/FM) signal first and then look for a digital signal.

AUDIO SYSTEM DIAGNOSTICS

The TSD can store diagnostic fault codes to enable diagnosis of system malfunctions. The fault codes can be accessed using Land Rover approved diagnostic equipment or by using the on-board diagnostic routine available on the TSD. Refer to the TSD section for details.

DIGITAL AUDIO BROADCAST (DAB)

The DAB module is located in the Left Hand (LH) side of the luggage compartment. DAB is available for most European markets and gives access to digital radio channels for better sound quality and enhanced functionality depending on local service availability.

The system receives reception signals from the following sources to ensure optimum signal strength:

- DAB L-band antenna located in the roof pod antenna module
- DAB band III antenna located in the RH rear side window.

The DAB module is a dedicated receiver/tuner which is controlled by the IHU on the MOST ring. The module processes the signals from the DAB antennas. Digital information is transmitted on the MOST ring and processed by the IHU. The processed information is sent out to the audio amplifier, converted to analogue then broadcast through the speaker system.

DIAGNOSTICS

Digital radio transmission does not always produce a higher resolution sound. This is very much dependant on the compression rate the provider is transmitting the signal.

Coverage of the digital network is still relatively young in terms of development and is constantly evolving. The United Kingdom for example currently enjoys a coverage of more than 85%, France in comparison is limited to a 20% coverage. Prior to any diagnostic action in the event of a customer reception complaint consider the following:

- DAB reception depends on local channels/stations and their signal strength

- Reception is affected by tunnels, hills, tall buildings or densely tree-lined roads.

Try using a stored channel with proven strength in your area to demonstrate.

During periods of signal strength deterioration, the DAB system is designed to notify the driver that the signal is weak. As an alternative to muting the sound, possibly replicating a fault symptom to the driver, the over-laying of a 'bubbling' sound is deliberately produced during the transmission. This sound should also not be perceived as a fault, no further diagnosis is required in this instance.

NOTE:

The DAB system will not revert to a FM station in the event of signal loss.

PORTABLE AUDIO INTERFACE

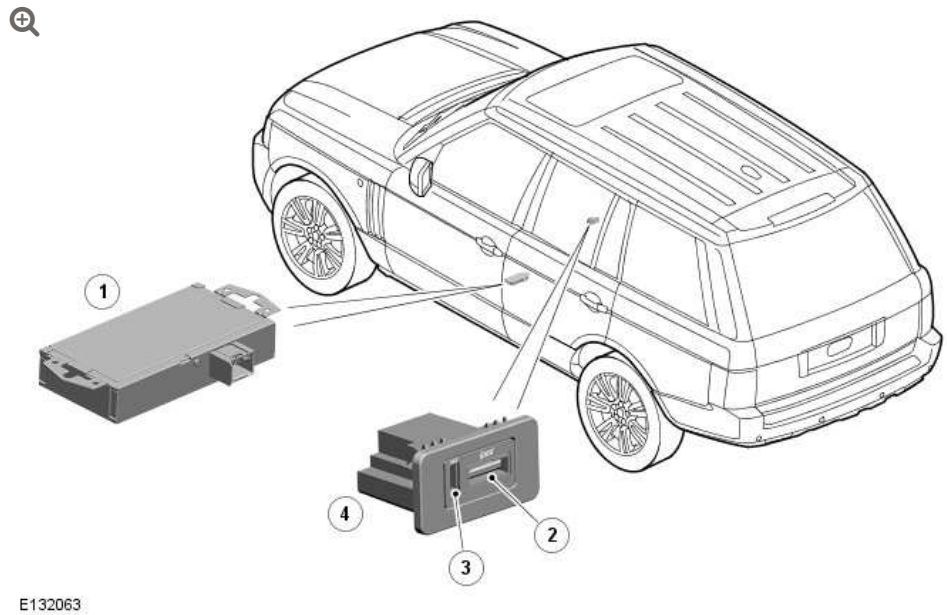

ITEM	DESCRIPTION

ITEM	DESCRIPTION
1	Portable audio module
2	iPod port
3	USB port
4	Portable audio interface

Portable audio devices can be connected to the interface panel, located in the front center armrest. Auxiliary devices can be connected to the AUX socket in the Audio Visual Input Output (AVIO) panel at the rear of the floor console.

The portable audio interface system comprises a portable audio interface module, which is located below the driver's seat, and an interface panel located in the center armrest cubby box.

Portable Audio Module

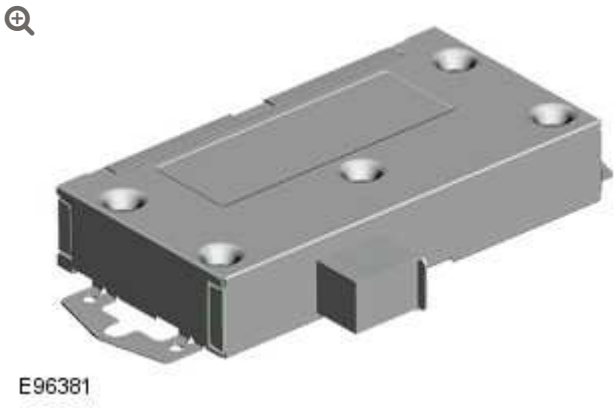

Portable devices that can be connected include:

- USB mass storage devices (for example a memory stick). Devices must use FAT or FAT32 file format
- iPod® (iPod Classic®, iTouch®, iPhone® and Nano® are supported - full functionality for older devices cannot be guaranteed). iPod Shuffle® functionality cannot be guaranteed

NOTE:

iPod® is a trademark of Apple Computer Inc., registered in the US and other countries.

A dedicated iPod lead is available from Land Rover Dealers.

Auxiliary device (personal audio, MP3 players, all iPods®)

If an iPod® or mass storage device is connected, use the TSD to operate and search the device. Many of the controls are similar to those available for CD (compact disc) play.

If you are using any portable media device via the AUX socket, then playback control must be from the device itself.

NOTES:

- an iPod shuffle may be connected via the AUX socket.
- The audio system will play MP3, WMA, WAV and AAC files.

Refer to the Owners Handbook for details of portable audio interface operation.

STEERING WHEEL SWITCHES

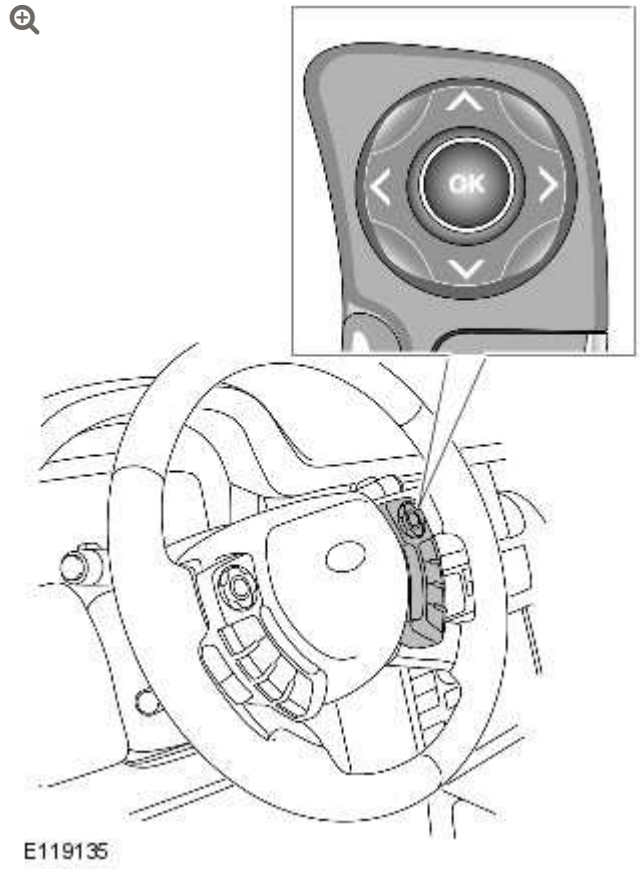

The audio system can be controlled using steering wheel mounted control to adjust audio settings.

Four positions on the switch control volume up, volume down, search up and search down.

The steering wheel audio control switches are hardwired to steering wheel module. The module converts the switch selections into LIN (local interconnect network) bus messages which are passed via the rotary coupler to the CJB. These signals are then passed from the CJB to the IHU to control the requested audio functions.

INITIAL SCREEN DISPLAY

Once powered the TSD will initially display the 'Range Rover' image for a short time followed by the last displayed screen or menu. On a new vehicle, when the system is operated for the first time, the system will display the 'Home' menu to allow the user to adjust the factory default settings. The system settings are set to suit the market to which the vehicle is to be delivered. These can be changed by the customer to suit their preferences.

The infotainment system can be operated at times when the ignition is in the off mode and is known as one hour mode. Pressing the audio on/off button will power the system for a period of one hour. After the one hour period, the system will power down to avoid excessive drain on the vehicle battery.

AUDIO SYSTEM CONTROL DIAGRAM

NOTES:

- Not all the components shown are related to the audio system, but form part of the MOST ring.
- **A** = Hardwired, **N** = Medium Speed CAN bus, **O** = LIN Bus, **P** = MOST

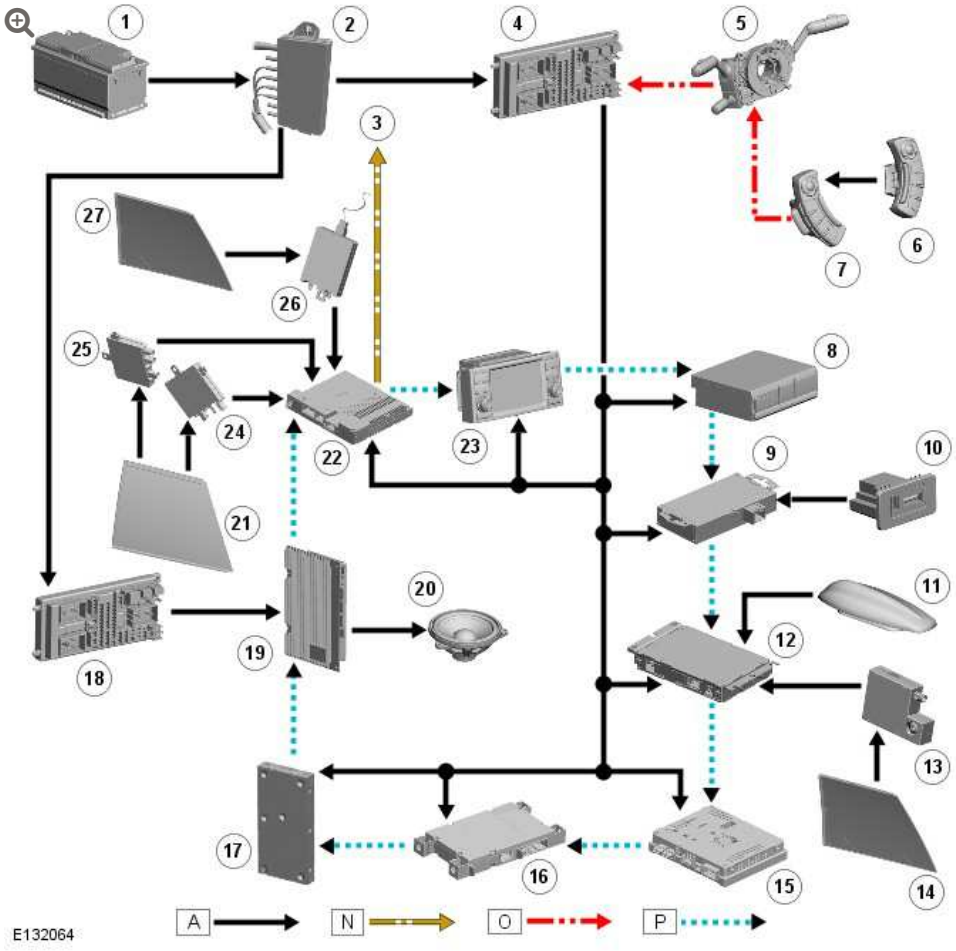

ITEM	DESCRIPTION
1	Battery
2	Battery Junction Box (BJB)
3	Medium Speed Controller Area Network (CAN) bus to other systems
4	Central Junction box (CJB)
5	Clockspring
6	RH steering wheel switch module
7	Left Hand (LH) steering wheel switch module
8	Compact Disc (CD) autochanger
9	Portable audio module
10	Portable audio interface
11	Roof pod (SDARS/DAB)
12	SDARS/HD/DAB module

ITEM	DESCRIPTION
13	DAB Antenna amplifier
14	RH side window DAB antenna
15	TV module
16	Telephone module
17	Rear Seat Entertainment (RSE) module
18	Rear Junction Box (RJB)
19	Audio amplifier
20	Speakers
21	Left Hand (LH) glass antenna (AM/FM/Diversity/TV)
22	Integrated Head Unit (IHU)
23	Touch Screen Display (TSD)
24	AM/FM antenna amplifier
25	AM/FM diversity antenna amplifier
26	FM antenna amplifier
27	Right Hand (RH) glass antenna (DAB/TV/Auxiliary park heating)

2012.0 RANGE ROVER (LM), 415-01

AUDIO UNIT

DESCRIPTION AND OPERATION

AUDIO SYSTEM COMPONENT LOCATION – RANGE ROVER ULTIMATE – SHEET 1 OF 2

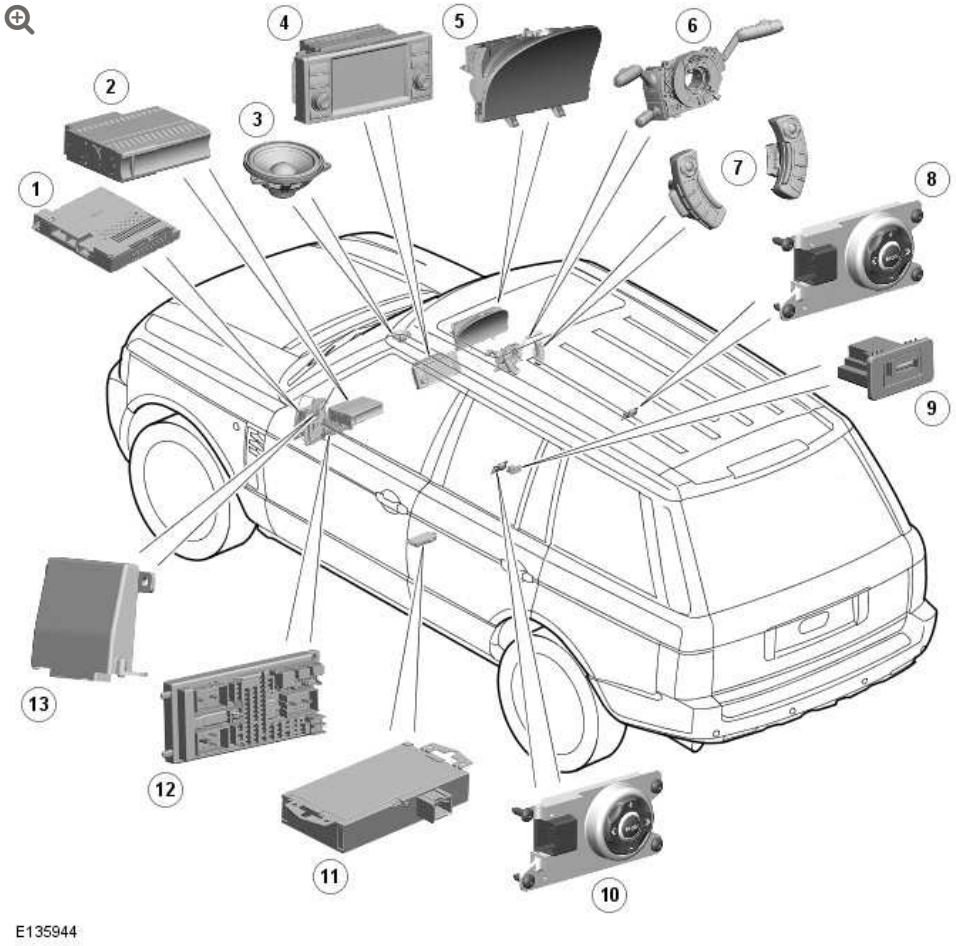

ITEM	DESCRIPTION
1	Integrated Head Unit (IHU)

ITEM	DESCRIPTION
2	compact disc (CD) autochanger
3	Speakers
4	Touch Screen Display (TSD)
5	Instrument cluster
6	Clock spring
7	Steering wheel switches
8	RH rear seat audio control switch
9	Portable audio interface
10	LH rear seat audio control switch
11	Portable audio module
12	Central Junction Box (CJB)
13	Rear Entertainment Control Module (RECM)

AUDIO SYSTEM COMPONENT LOCATION – RANGE ROVER ULTIMATE – SHEET 2 OF 2

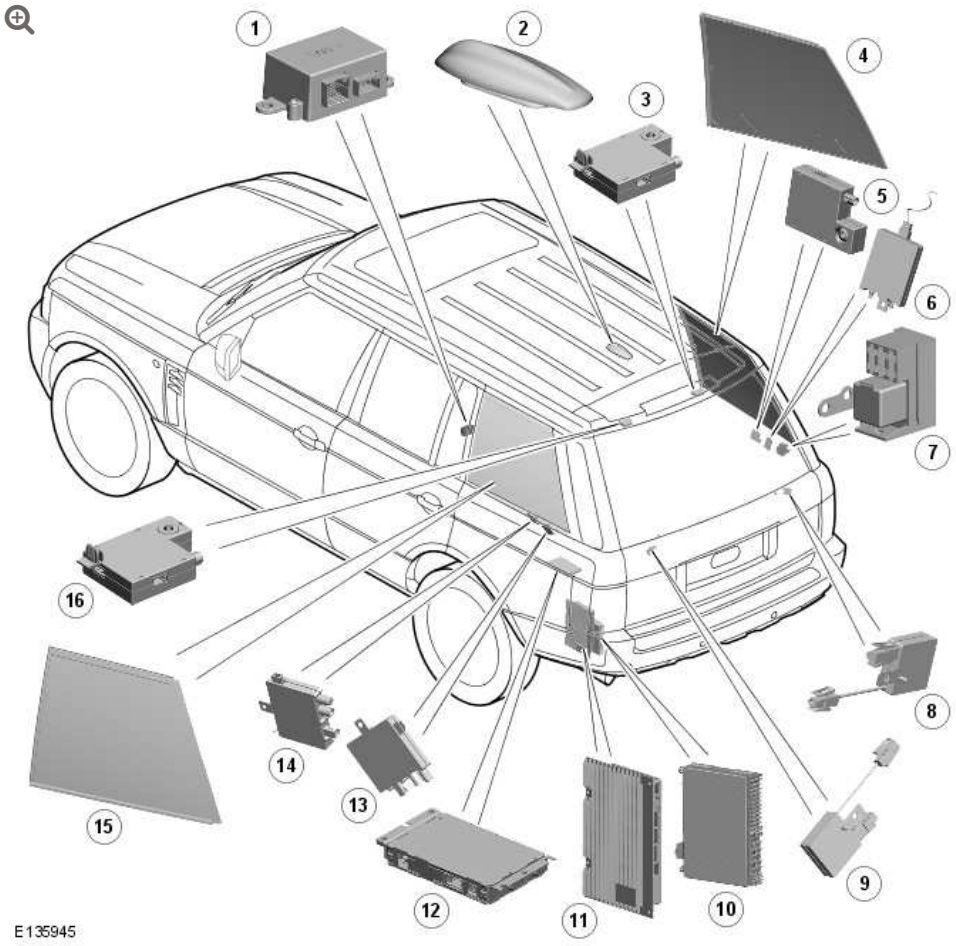

ITEM	DESCRIPTION
1	Rear seat audio control relay
2	Roof pod antenna DAB or SDARS (NAS and Canada only) with / without GPS (Navigation)
3	VICS Amplifier (Japan only)) or Traffic Management Channel (TMC)
4	Right Hand (RH) glass antenna (DAB/TV/Auxiliary park heating)
5	Digital Audio Broadcast (DAB) antenna amplifier
6	RH Rear TV / Auxiliary park heating antenna amplifier (Ref only)
7	Rear entertainment junction box
8	Antenna filter

ITEM	DESCRIPTION
9	Antenna filter
10	Hybrid Digital (HD) radio module
11	Audio amplifier
12	SDARS receiver (NAS only)
13	Left Hand (LH) TV antenna amplifier (Ref only)
14	AM/FM / diversity antenna amplifier
15	LH glass antenna (AM/FM/Diversity/TV)
16	FM antenna amplifier

GENERAL

The Range Rover Ultimate audio system comprises a Logic7 HD 1200W Premium audio amplifier, 19 speaker system which uses the dual view Touch Screen Display (TSD) as its interface.

NOTE:

Due to legislation, the NAS markets do not receive the dual-view TSD option. A single view TSD is available in these markets. Where markets allow, dual view TSD is fitted with the Logic7 HD Premium systems.

Additional audio/multimedia features on the Range Rover Ultimate are:

- Telephone
- Satellite navigation
- Television / Teletext
- Voice recognition system (navigation and telephone)

- Digital radio - DAB/SDARS/HD
- Apple iPad® integration.

NOTE:

iPad is a trademark of Apple Inc., registered in the U.S.A. and other countries

MOST

The components of the complete audio/infotainment system are all connected on the Media Orientated Systems Transport (MOST) ring. The MOST ring is a fibre optic communications bus for multimedia applications. Sound and control information is passed around the MOST ring and can be picked up by any of the systems units. For example, sound information is sent from the CD autochanger along the MOST ring and is collected by the audio amplifier which then outputs the sound to the speakers.

MOST Components

NOTE:

Not all the components shown are related to the audio system, but form part of the MOST ring.

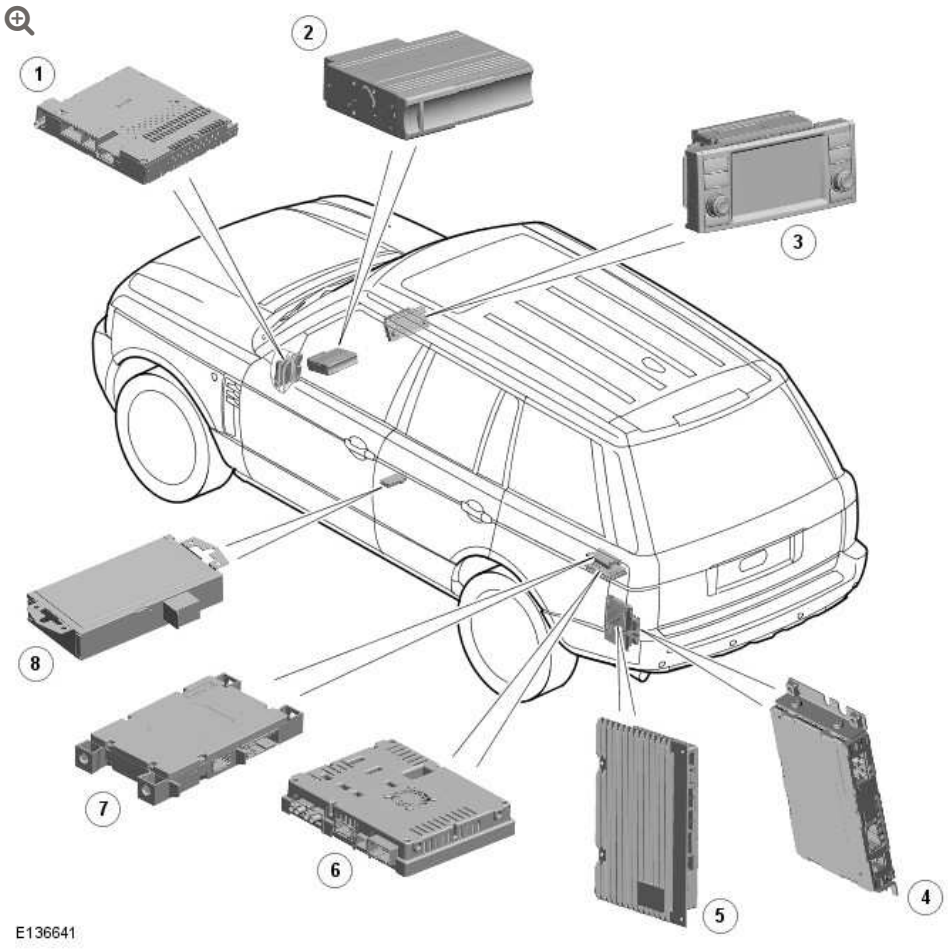

ITEM	DESCRIPTION
1	Integrated Head Unit (IHU)
2	Compact Disc (CD) autochanger
3	Touch Screen Display (TSD)
4	Digital Radio (DAB/SDARS/HD)
5	Audio amplifier
6	Television (TV) tuner
7	Telephone module
8	Portable audio module

MOST technology uses a plastic optical fibre which forms a network connecting the audio and multimedia system components. Each component in the ring is connected to the plastic optical fibre

through a device known as a Fibre Optical Transceiver (FOT). Each FOT has two optical connections; one connection is sensitive to light and is the input and the second connection forms the light source and is the output. The system operates by connecting the output from one FOT to the input of another FOT.

The light signals are sent in one direction only and are formed in the following way:

- Electrical signals are converted into an electrical current
- The current then drives a light emitting diode (LED) in the FOT to produce a high intensity red light
- The LED transmits the light through a fibre optic cable
- A photo diode in the FOT at the opposite end of the fibre optic cable detects the light.

The following components are connected to the MOST ring:

- Integrated Head Unit (IHU)
- Touch Screen Display (TSD)
- SDARS receiver (NAS and Canada only)
- Digital radio module (DAB and SDARS/HD (NAS and Canada only)
- TV tuner
- Audio amplifier
- Telephone module
- Portable audio interface module
- CD autochanger.

The IHU is the timing master for the MOST system. The IHU controls and manages the MOST ring and the system components. It is also responsible for the MOST security system. Each component in the

MOST ring has a unique serial number. The component serial number is stored in a registry file in the instrument cluster. If any component serial number is not recognized, the entire audio system will not function.

A replaced component requires its serial number to be programmed in the instrument cluster registry using Land Rover approved diagnostic equipment. If the instrument cluster is replaced, the complete system will not function until the instrument cluster is programmed with the component serial numbers using Land Rover approved diagnostic equipment.

NOTE:

On Range Rover Ultimate vehicles, software downloads to the Integrated Head Unit (IHU) or any component on the MOST ring requires the disconnection of the Rear Entertainment Control Module (RECM) from the medium speed controller area network (CAN) bus. Refer to the Audio/Video System Software Downloads section in the Video System section. For additional information, refer to: Video System (415-07, Description and Operation).

MOST DIAGNOSTICS

A light box is used to diagnose the MOST system. The light box emits a visible, high intensity red light which can be connected into the ring at any point to test the ring integrity. The light box is used in conjunction with Land Rover approved diagnostic equipment.

Disconnecting a MOST connector will reveal if the high intensity red light is visible. Do not view the red light directly. If a break occurs in the MOST ring fault codes are stored in the IHU which can be retrieved using Land Rover approved diagnostic equipment.

CENTRAL JUNCTION BOX (CJB) GATEWAY FUNCTION

The CJB (central junction box) incorporates a gateway function. The gateway function is the link between the vehicle bus systems and the audio system MOST ring. When the vehicle is unlocked, the CJB receives a system 'wake-up' message on the CAN bus. This message is then passed to the integrated head unit (IHU) which then 'wakes-up' the MOST ring components by energizing the infotainment relay.

SYSTEM SECURITY

The gateway function stores a unique serial number for each component in the infotainment system. This system, known as 'Security on MOST' replaces the radio codes used on previous audio systems.

During vehicle production, the serial number of each component is extracted from its memory and stored in the CJB. At every subsequent ignition on cycle, the Integrated Head Unit (IHU) reads the serial number for each component and compares them to the stored serial numbers in the CJB. If an incorrect code detected the MOST system will shut down and the infotainment system will not function.

If an infotainment component is replaced, Land Rover approved diagnostic equipment will be required to disable the security on MOST feature. A file is downloaded which extracts the new serial number from the replacement component and records it in the CJB. Land Rover approved diagnostic equipment is used to re-enable the security on MOST feature and restore the system security.

INFOTAINMENT RELAY

An infotainment relay is located in the CJB. The relay receives a permanent power supply from fusible link 2B in the BJB (battery

junction box). The relay coil is controlled by the IHU which provides a ground for the coil. When a vehicle unlocked signal is transmitted on the CAN bus, the message is received by the IHU which provides a ground for the relay, closing the contacts and supplying power to the audio/infotainment system components. The IHU maintains the relay in an energized condition for a period of time after the ignition is in the off mode 0 to allow time for the navigation computer to 'power down' and also to allow a faster system start-up if the system is required subsequently.

REAR ENTERTAINMENT CONTROL MODULE (RECM)

The RECM is an additional component unique to Range Rover Ultimate. The RECM is located on a bracket, adjacent to the CD autochanger in the rear of the glove compartment.

The RECM provides a gateway between the IHU and the medium speed CAN (controller area network) bus system. In response to inputs from the rear audio control switches, the RECM manipulates CAN messages for audio control and routes the Apple iPad audio output into the vehicle audio system.

For further details on the RECM refer to the Video section.
For additional information, refer to: Video System (415-07, Description and Operation).

REAR SEAT AUDIO CONTROL RELAY

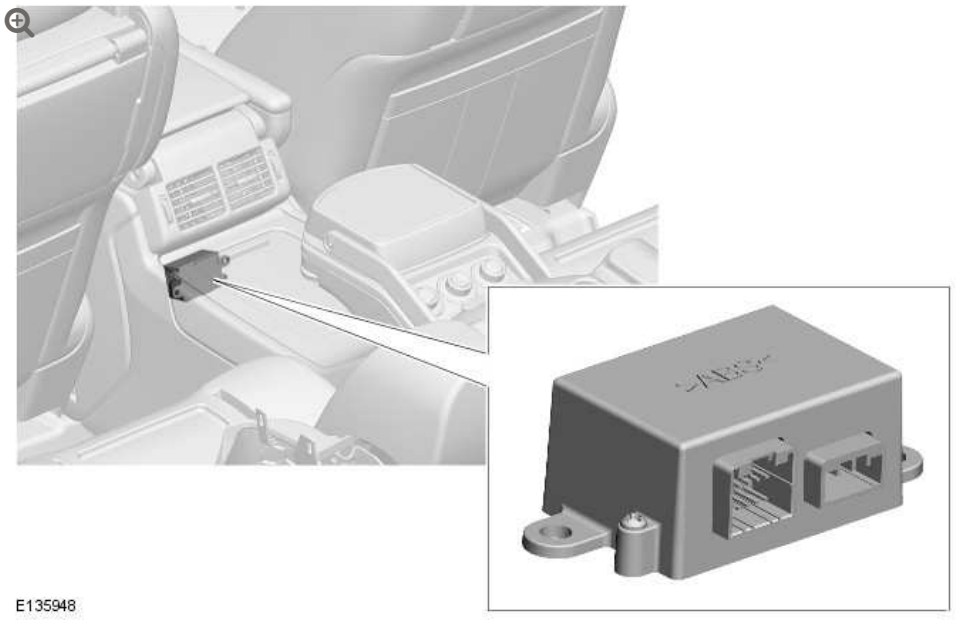

The rear seat audio control relay is an additional component unique to Range Rover Ultimate. The relay is located at the rear of the front floor console, below the rear passenger compartment air vents. The module is secured to the front floor console with two flange bolts.

The rear seat audio control relay receives audio output from an individual iPad and forwards the output to the IHU. The relay ensures that only the output from one iPad is passed to the IHU for audio through the vehicle speaker system.
For additional information, refer to: Video System (415-07, Description and Operation).

AUDIO SYSTEM

The Hi-Fidelity Logic7 HD 1200W Premium Harman Kardon audio system comprises:

- Logic7 HD 1200W amplifier
- TSD

- IHU
- Six disc CD autochanger
- Portable audio interface
- 19 Speakers (5 co-axial).

The systems have the option of Digital Audio Broadcast (DAB) radio or High Definition (HD) digital broadcast radio or Satellite Digital Audio Radio Service (SDARS) (NAS and Canada only). The DAB and HD options are not available in all markets and are dependent on service availability.

TOUCH SCREEN DISPLAY

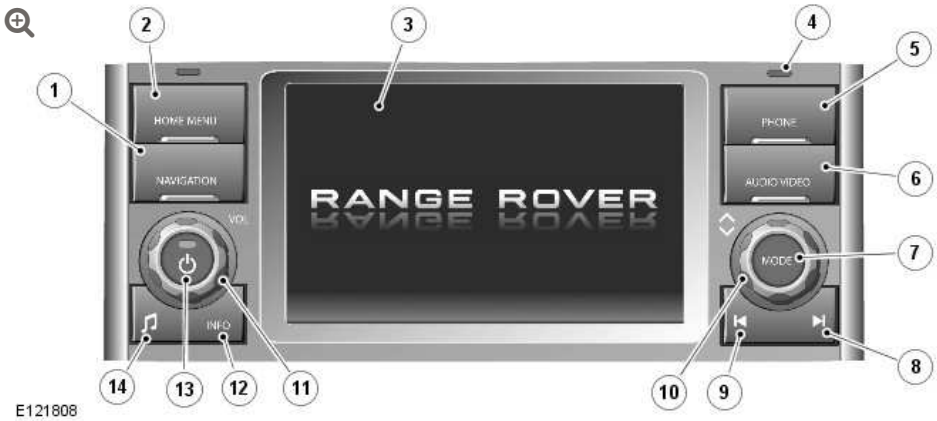

ITEM	DESCRIPTION
1	Navigation
2	Home menu
3	Touch screen display
4	Light sensor
5	Telephone
6	Audio/Video
7	Search up/increase
8	Mode
9	Search down/decrease

ITEM	DESCRIPTION
10	Scroll up/down
11	Volume
12	Information
13	Audio on/off
14	Tone

The Touch Screen Display (TSD) is located in the center of the instrument panel and is the driver control interface for the infotainment system. The TSD is connected to the MOST ring and communicates with the other components in the audio/infotainment system.

The TSD provides driver display and control of the audio system, telephone, the rear view camera, proximity cameras, VentureCam™, the Traffic Message Channel (TMC) and the navigation system.

The systems are operated by a combination of the physical buttons located on each side of the screen and the 'virtual' buttons displayed on the touch screen. For clarification, the physical buttons are referred to as 'buttons' and the touch screen virtual buttons are referred to as 'icons'.

The TSD is a seven inch touch sensitive, 1280 X 480 pixels LCD (liquid crystal display) VGA screen. The dual-view TSD allows the front seat passenger to view television and video images when the car is being driven. The dual-view screen allows the driver to see the navigation or other system screens but not the TV or video when the vehicle is moving. The screen can be switched between single and dual view using the AUDIO VIDEO switch on the TSD.

NOTE:

> Due to legislation, the NAS markets do not receive this dual-view option. A single view display is available in these markets.

The dual-view TSD uses Parallax Barrier Shutter Technology to alternately hide and reveal columns of pixels to the left and right hand views of the screen. The display comes with a specially designed agar coating to help prevent sunlight bleaching.

Care should be taken with the TSD to ensure its correct operation:

- The screen should be cleaned with a lightly, water moistened cloth. Do not use chemical agents or domestic products to clean the screen or any part of the surround.
- Only use a finger to operate the touch screen. Ensure only use one finger is used to avoid incorrect entries.
- A short light press of the touch screen is sufficient. Excessive pressure can damage the screen.

The TSD also incorporates a 40 GB hard disc drive which is used for storing the navigation data and maps. The disc drive cannot store audio files.
For additional information, refer to: Navigation System (419-07, Description and Operation).

INTEGRATED HEAD UNIT (IHU)

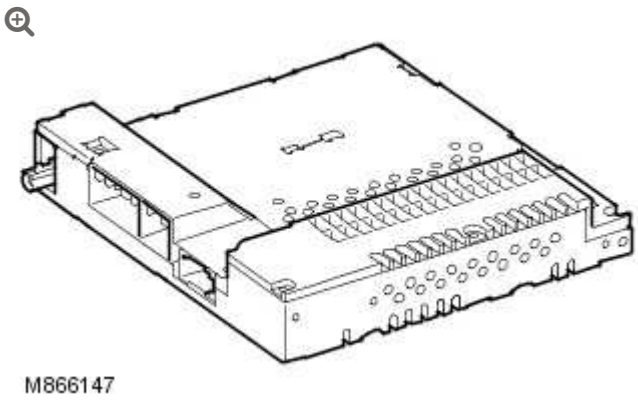

The Integrated Head Unit (IHU) is located behind the glove compartment mounted CD autochanger. The IHU is secured to the instrument panel support frame. The IHU contains the radio functionality for the audio system and communicates on the MOST ring with the components in the audio system. The IHU is also the timing master for the MOST ring. The IHU controls and manages the MOST ring and provides the allocations of channels, system power management and the functionality and co-ordination of the other system components.

The IHU also controls the operation of the infotainment relay. The infotainment relay is located in the CJB and the relay coil is controlled by the IHU which provides a ground for the coil. The relay supplies power to a number of the audio system components.

On the Range Rover Ultimate, the IHU is connected via the medium speed CAN bus to the Rear Entertainment Control Module (RECM). CAN messages for audio control pass through the RECM which operates as a CAN gateway for the IHU. The RECM passes on audio volume, channel skip and audio source messages from the rear seat audio switches to the IHU. For further details on the RECM and its functions, refer to the Video section
For additional information, refer to: Video System (415-07, Description and Operation).

Radio signals are received by antennae located in the left hand rear quarter window and the rear screen. An frequency modulation (FM) antenna amplifier is located in the upper taildoor and passes amplitude modulation (AM)/FM signals from the rear screen antennae to the IHU. A diversity antenna is located in the left hand rear quarter window. A FM diversity antenna amplifier is located behind the left hand luggage compartment trim panel, below the window and passes FM radio signals from the rear quarter window diversity antenna to the IHU. The FM diversity system uses a multi-antenna system which selects the strongest signals from the antennae. In weak signal areas the amplifier uses an integral ultrasonic noise detector to find the least distorted antenna signal to ensure maximum reception quality is maintained.

Diagnostic messages retrieved via Land Rover approved diagnostic equipment are routed from the IHU through the instrument pack, prior to being transferred to the diagnostic socket.

NOTE:

On Range Rover Ultimate vehicles, software downloads to the Integrated Head Unit (IHU) or any component on the MOST ring requires the disconnection of the Rear Entertainment Control Module (RECM) from the medium speed CAN bus. Refer to the Audio/Video System Software Downloads section in the Video System section.
For additional information, refer to: Video System (415-07, Description and Operation).

6 DISC CD AUTOCHANGER

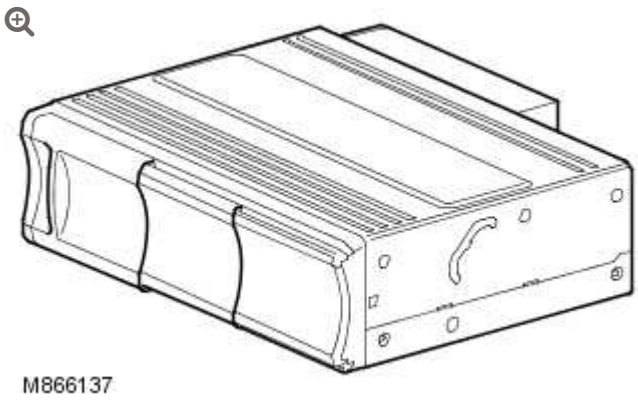

The six disc CD autochanger is located at the rear of the glove compartment. The CD autochanger is a standard fitment on all Range Rover models. The CD autochanger is capable of playing audio CD's and MP3 CD's. The autochanger uses a six disc magazine which is loaded into an aperture on the front of the unit.

The CD autochanger is connected on the MOST ring and receives a permanent fused power supply from the CJB.

SATELLITE DIGITAL AUDIO RADIO SERVICE (SDARS) (NAS AND CANADA VEHICLES ONLY)

SDARS is a satellite based radio service which is available in the United States of America (USA) and Canada. Digitally encoded audio transmissions are broadcast to receivers from two satellites or from ground based repeater stations. It is possible for the SDARS transmissions to be received in northern Mexico but reception is not guaranteed outside of the USA or Canada.

The service is provided by a company called Sirius. The service comprises over 100 channels of digital entertainment which is provided by subscription requiring a monthly payment.

Operation of the SDARS system is the same as the radio operation with selections made using the TSD icons or controls on the TSD.

The SDARS system requires additional components to be added to the audio system. An SDARS antenna is located in the roof mounted pod and a receiver is located in the LH (left-hand) side of the luggage compartment to allow reception of the service.

The customer must subscribe to receive the SDARS service. If the user selects a channel to which subscription is not authorised, the TSD will display the telephone number of the SDARS providers subscription service. The telephone number is stored in the IHU and can be changed or amended using Land Rover approved diagnostic equipment.

SDARS ANTENNA

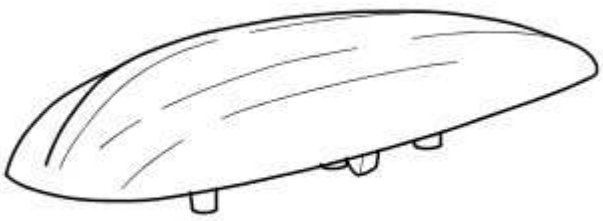

E120935

The SDARS antenna is located in the roof pod and is shared with the telephone system and the navigation system where fitted. The roof pod is located externally in a central position towards the rear of the roof.

The roof pod contains two antennas for the SDARS system. One receives the digital transmissions from the SDARS satellites and the second receives transmissions from the ground based repeater stations.

The SDARS antennas are connected to the SDARS receiver using co-axial cables.

SDARS RECEIVER

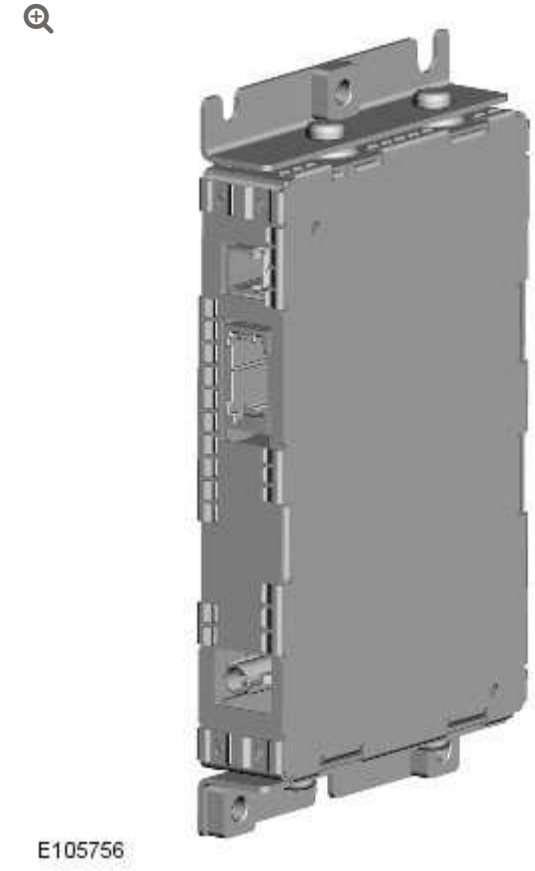

The SDARS receiver is a dedicated SDARS head unit and tuner which is controlled by the IHU on the MOST ring. The receiver is located in the LH rear of the luggage compartment.

The receiver processes the signals from the SDARS antennas. The signals are filtered and the receiver determines which of the two signals is the strongest with the least distortion to use for the audio output. For example, if the vehicle drives into a tunnel, the receiver will change from a satellite signal to a repeater station signal to maintain the strongest signal.

The receiver also contains software and hardware to allow digital reception in Canada in addition to the USA.

HYBRID DIGITAL (HD) RADIO

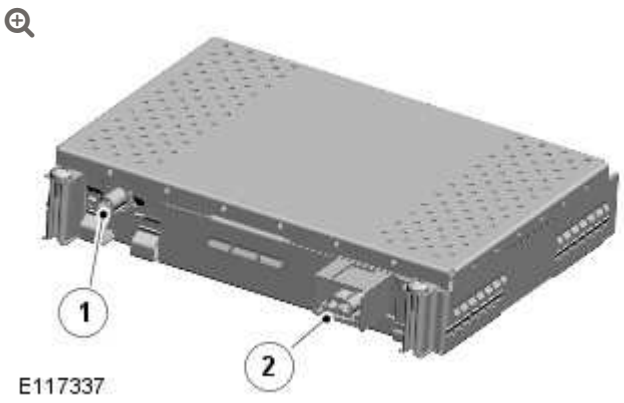

ITEM	DESCRIPTION
1	Antenna connector
2	Power, ground and MOST connector

Hybrid Digital (HD) radio is a 'free to air' alternative to the SDARS subscription system. The HD module is designed to receive and convert radio signals transmitted by stations sending out a hybrid signal (both analogue and digital) in both AM and FM frequencies. As it is digital, textual data such as song titles can also be displayed.

HD radio does not require a dedicated antenna. It uses the existing AM/FM antennas. If HD radio is specified to the vehicle, the output from the antenna amplifier is diverted to the HD module instead of the IHU tuner

NOTE:

Not all radio stations will provide the HD element of the broadcast.

HD Radio provides digital signals to improve standard AM/FM audio quality. It also provides additional secondary HD channels on FM, when available.

The HD broadcast is carried with an existing AM/FM signal. This means that if the HD signal is unavailable, the analogue (AM/FM) signal is automatically selected.

HD radio stations simultaneously transmits a digital version of the analog broadcast and also provide a second digital channel, which can be used for alternate radio programming or data services such as song information, weather reports and car navigation updates.

HD radio transmits the digital signals in unused portions of the same channel as the analogue AM and FM signals, known as In-Band On-Channel (IBOC). As a result, radios are more easily designed to pick up both signals and tune into the station's analogue (AM/FM) signal first and then look for a digital signal.

AUDIO SYSTEM DIAGNOSTICS

The TSD can store diagnostic fault codes to enable diagnosis of system malfunctions. The fault codes can be accessed using Land Rover approved diagnostic equipment or by using the on-board diagnostic routine available on the TSD. Refer to the TSD section for details.

DIGITAL AUDIO BROADCAST (DAB)

The DAB module is located in the LH side of the luggage compartment. DAB is available for most European markets and gives access to digital radio channels for better sound quality and enhanced functionality depending on local service availability.

The system receives reception signals from the following sources to ensure optimum signal strength:

- DAB L-band antenna located in the roof pod antenna module
- DAB band III antenna located in the RH (right-hand) rear side window.

The DAB module is a dedicated receiver/tuner which is controlled by the IHU on the MOST ring. The module processes the signals from the DAB antennas. Digital information is transmitted on the MOST ring and processed by the IHU. The processed information is sent out to the audio amplifier, converted to analogue then broadcast through the speaker system.

DIAGNOSTICS

Digital radio transmission does not always produce a higher resolution sound. This is very much dependant on the compression rate the provider is transmitting the signal.

Coverage of the digital network is still relatively young in terms of development and is constantly evolving. The United Kingdom for example currently enjoys a coverage of more than 85%, France in comparison is limited to a 20% coverage. Prior to any diagnostic action in the event of a customer reception complaint consider the following:

- DAB reception depends on local channels/stations and their signal strength
- Reception is affected by tunnels, hills, tall buildings or densely tree-lined roads.

Try using a stored channel with proven strength in your area to demonstrate.

During periods of signal strength deterioration, the DAB system is designed to notify the driver that the signal is weak. As an alternative

to muting the sound, possibly replicating a fault symptom to the driver, the over-laying of a 'bubbling' sound is deliberately produced during the transmission. This sound should also not be perceived as a fault, no further diagnosis is required in this instance.

NOTE:

The DAB system will not revert to a FM station in the event of signal loss.

PORTABLE AUDIO INTERFACE

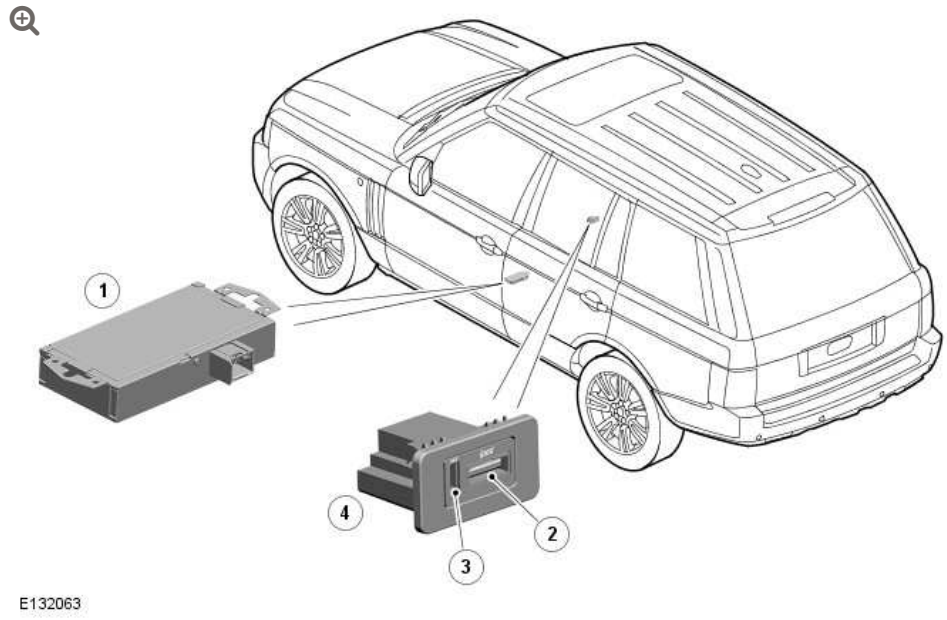

ITEM	DESCRIPTION
1	Portable audio module
2	iPod port
3	USB port
4	Portable audio interface

Portable audio devices can be connected to the interface panel, located in the front center armrest.

The portable audio interface system comprises a portable audio interface module, which is located below the driver's seat, and an interface panel located in the center armrest cubby box.

Portable Audio Module

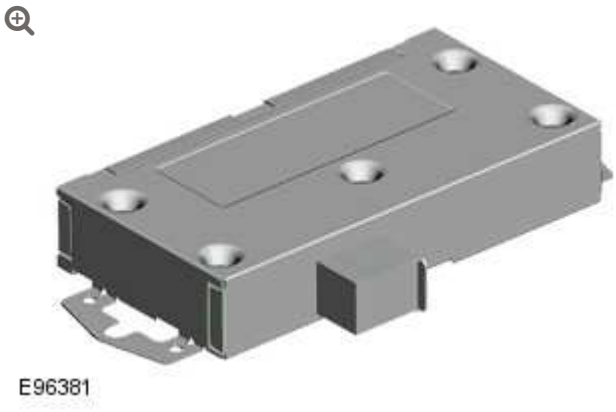

Portable devices that can be connected include:

- USB mass storage devices (for example a memory stick). Devices must use FAT or FAT32 file format
- iPod® (iPod Classic®, iTouch®, iPhone® and Nano® are supported - full functionality for older devices cannot be guaranteed). iPod Shuffle® functionality cannot be guaranteed

NOTE:

iPod® is a trademark of Apple Computer Inc., registered in the U.S.A. and other countries.
A dedicated iPod lead is available from Land Rover Dealers.

Auxiliary Device (personal audio, MP3 players, all iPods®)

If an iPod® or mass storage device is connected, the TSD is used to operate and search the device. Many of the controls are similar to those available for CD (compact disc) play.

NOTE:

The audio system will play MP3, WMA, WAV and AAC files.

Refer to the Owners Handbook for details of portable audio interface operation.

STEERING WHEEL SWITCHES

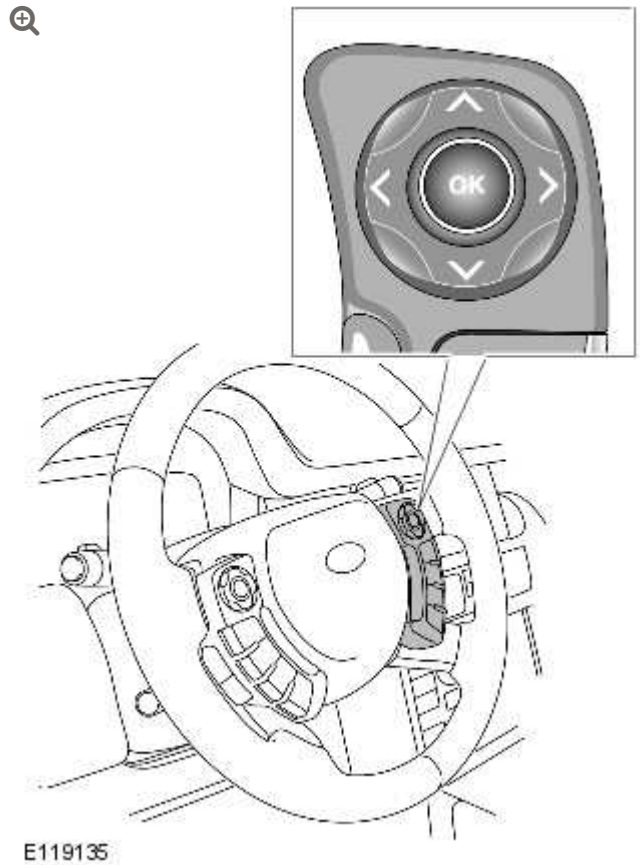

The audio system can be controlled using steering wheel mounted control to adjust audio settings.

Four positions on the switch control volume up, volume down, search up and search down.

The steering wheel audio control switches are hardwired to steering wheel module. The module converts the switch selections into LIN (local interconnect network) bus messages which are passed via the clockspring to the CJB. These signals are then passed from the CJB to the IHU to control the requested audio functions.

REAR SEAT AUDIO CONTROL SWITCHES



E135947

ITEM	DESCRIPTION
1	Electrical connector
2	Housing
3	Audio volume and skip switch
4	MODE select switch

A rear seat audio control switch is located in the rear of each front seat, behind the iPad docking station lid and are unique to the

Range Rover Ultimate. The switches are accessed by raising the iPad docking station.

Each rear seat audio control switch is connected directly to the RECM. The RECM processes the switch operation and converts the switch operation into CAN messages to the IHU to control the audio output and mode selection.
For additional information, refer to: Video System (415-07, Description and Operation).

INITIAL TSD SCREEN DISPLAY

Once powered the TSD will initially display the 'Range Rover' image for a short time followed by the last displayed screen or menu. On a new vehicle, when the system is operated for the first time, the system will display the 'Home' menu to allow the user to adjust the factory default settings. The system settings are set to suit the market to which the vehicle is to be delivered. These can be changed by the customer to suit their preferences.

The infotainment system can be operated at times when the ignition is in the off mode 0 and is known as one hour mode. Pressing the audio on/off button will power the system for a period of one hour. After the one hour period, the system will power down to avoid excessive drain on the vehicle battery.

AUDIO SYSTEM CONTROL DIAGRAM

NOTES:

- Not all the components shown are related to the audio system, but form part of the MOST ring.
- **A** = Hardwired, **N** = Medium Speed CAN bus, **O** = LIN Bus, **P** = MOST

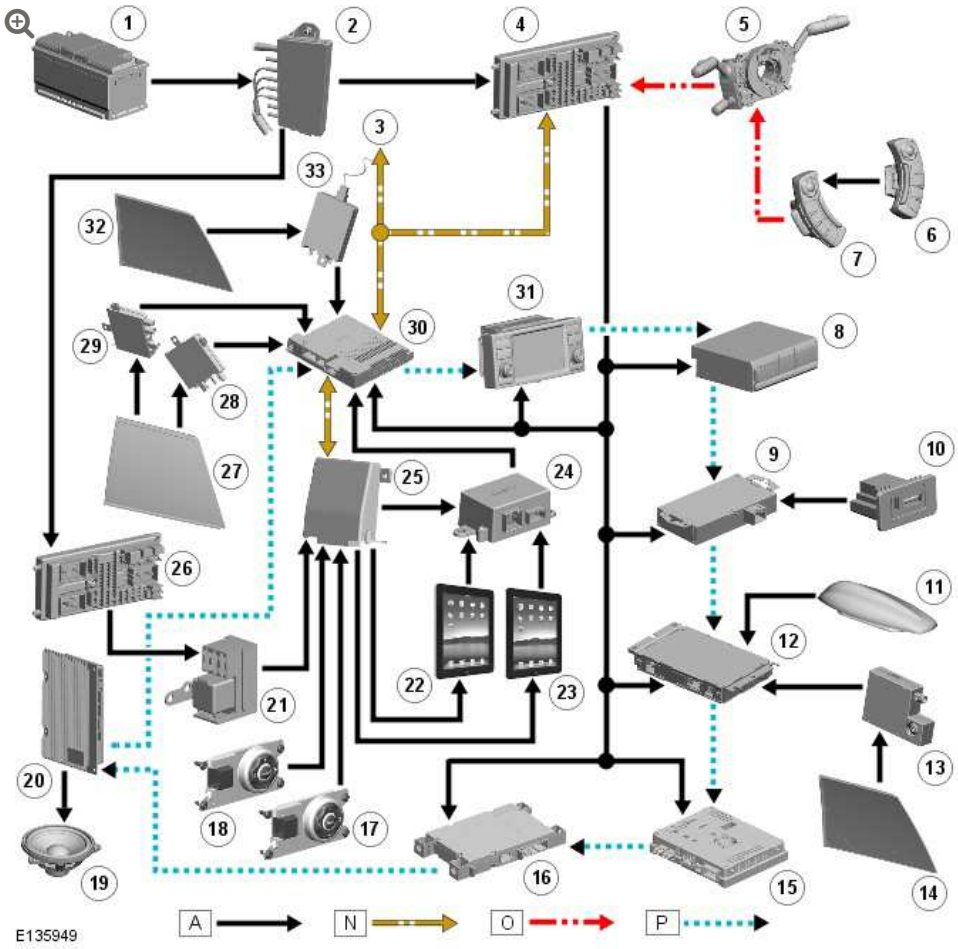

ITEM	DESCRIPTION
1	Battery
2	Battery Junction Box (BJB)
3	Medium Speed Controller Area Network (CAN) bus to other systems
4	Central Junction box (CJB)
5	Clockspring

ITEM	DESCRIPTION
6	Right Hand (RH) steering wheel switch module
7	Left Hand (LH) steering wheel switch module
8	Compact Disc (CD) autochanger
9	Portable audio module
10	Portable audio interface
11	Roof pod (SDARS/DAB)
12	SDARS/HD/DAB module
13	DAB Antenna amplifier
14	RH side window DAB antenna
15	TV module
16	Telephone module
17	Rear audio control switch - LH
18	Rear audio control switch - RH
19	Speakers
20	Audio amplifier
21	Rear entertainment junction box
22	iPad - LH
23	iPad - RH
24	Rear seat audio control relay
25	Rear Entertainment Control Module (RECM)
26	Rear Junction Box (RJB)
27	Left Hand (LH) glass antenna (AM/FM/Diversity/TV)
28	AM/FM diversity antenna amplifier
29	AM/FM antenna amplifier
30	Integrated Head Unit (IHU)
31	Touch Screen Display (TSD)
32	FM antenna amplifier

ITEM	DESCRIPTION
33	Right Hand (RH) glass antenna (DAB/TV/Auxiliary park heating)

AUDIO UNIT (G910521)

REMOVAL AND INSTALLATION

REMOVAL

WARNINGS:

- Persons working on the supplemental restraint system (SRS) must be fully trained and have been issued with the safety guidelines.
- Allow a period of 10 minutes to elapse after disconnecting the battery before undertaking any work on the SRS.
- The SRS electrical connectors are unique. DO NOT force, or attempt to connect electrical connectors to the wrong sockets.
- The correct procedures must always be used when working on SRS components.
- It is imperative that before any work is undertaken on the SRS system, the appropriate information is read thoroughly.
- Always disconnect both battery cables before beginning work on the SRS system. Disconnect the ground cable first. Never reverse connect the battery.
- Take extra care when handling SRS components.

1. Make the air bag supplemental restraint system (SRS) safe.
   For additional information, refer to: Standard Workshop Practices (100-00, Description and Operation).

2. Disconnect the battery ground cable.
   For additional information, refer to: Specifications (414-00, Specifications).

3. Remove the lower glove compartment.
   For additional information, refer to: Lower Glove Compartment (501-12, Removal and Installation).

4.

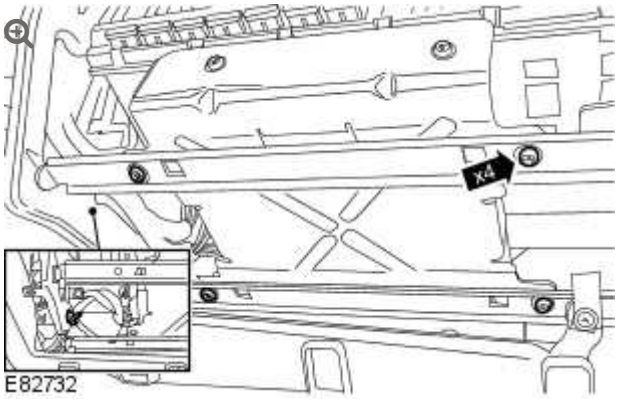

Release the audio unit.

- Remove the 4 screws.
- Release the wiring harness clip.

5.

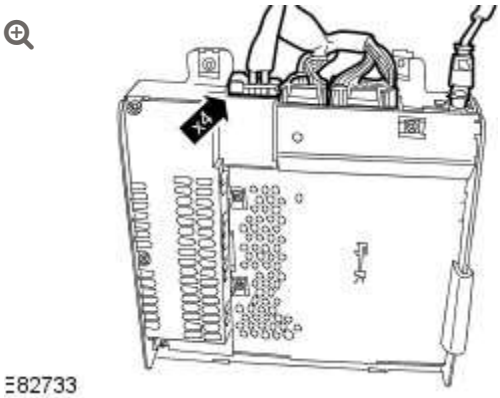

Remove the audio unit.

- Disconnect the 2 electrical connectors.
- Disconnect the coaxial cable connector.
- Disconnect the optical connector.

6.

NOTE:

Do not disassemble further if the component is removed for access only.

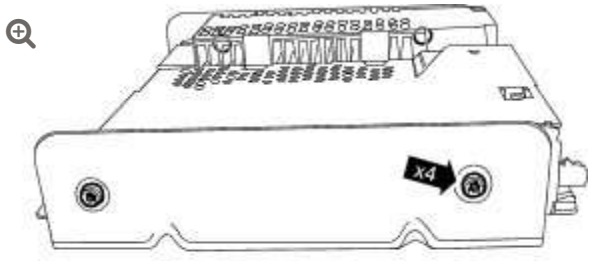

E82734

Disassemble the audio unit from the carrier bracket.

- Remove the 4 screws.
- Remove the audio unit.

INSTALLATION

1. Assemble the audio unit to the carrier bracket.
   - Install the screws.
2. Install the audio unit.
   - Connect the electrical connectors.
   - Connect the coaxial cable connector.
   - Connect the optical connector.
3. Secure the audio unit.
   - Secure the wiring harness clip.
   - Install the screws.
4. Install the lower glove compartment.
   For additional information, refer to: Lower Glove Compartment (501-12, Removal and Installation).
5.

Connect the battery ground cable.

For additional information, refer to: Specifications (414-00, Specifications).

AUDIO UNIT

COMPACT DISC (CD) CHANGER (G874148)

REMOVAL AND INSTALLATION

REMOVAL

WARNINGS:

- Persons working on the supplemental restraint system (SRS) must be fully trained and have been issued with the safety guidelines.
- Allow a period of 10 minutes to elapse after disconnecting the battery before undertaking any work on the SRS.
- The SRS electrical connectors are unique. DO NOT force, or attempt to connect electrical connectors to the wrong sockets.
- The correct procedures must always be used when working on SRS components.
- It is imperative that before any work is undertaken on the SRS system, the appropriate information is read thoroughly.
- Always disconnect both battery cables before beginning work on the SRS system. Disconnect the ground cable first. Never reverse connect the battery.
- Take extra care when handling SRS components.

1. Make the air bag supplemental restraint system (SRS) safe.
   For additional information, refer to: Standard Workshop Practices (100-00, Description and Operation).

2. Disconnect the battery ground cable.
   For additional information, refer to: Specifications (414-00, Specifications).

3. Remove the upper glove compartment.
   For additional information, refer to: Upper Glove Compartment (501-12, Removal and Installation).

4.

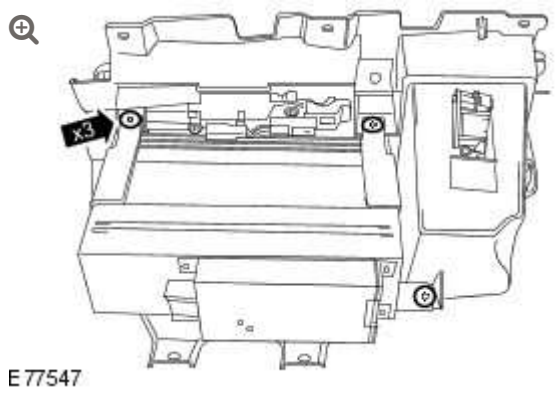

Remove the compact disc (CD) changer.

- Remove the 3 screws.

5.

NOTES:

- Do not disassemble further if the component is removed for access only.
- Right-hand shown, left-hand similar.

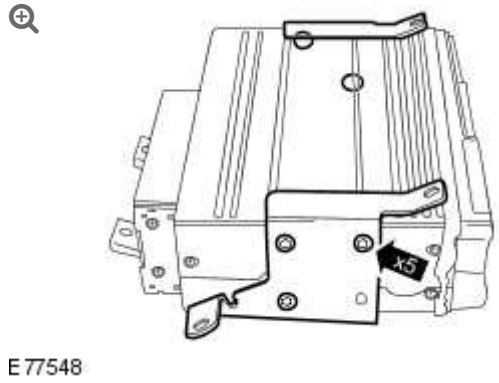

Remove the bracket from the CD changer.

- Remove the 5 screws.

INSTALLATION

1. Install the CD changer bracket.

- Install the 5 screws.

2. Install the CD changer.
   - Install the 3 screws.

3. Install the upper glove compartment.
   For additional information, refer to: Upper Glove Compartment (501-12, Removal and Installation).

4. Connect the battery ground cable.
   For additional information, refer to: Specifications (414-00, Specifications).

AUDIO UNIT

HD RADIO™ MODULE (G1247217)

REMOVAL AND INSTALLATION

REMOVAL

1. Disconnect the battery ground cable.
   Refer to: Specifications (414-00, Specifications).

2. Refer to: Rear Quarter Trim Panel (501-05, Removal and Installation).

3. 

4.

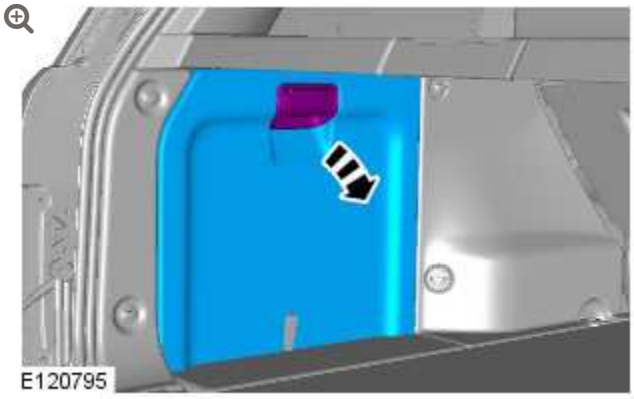

5.

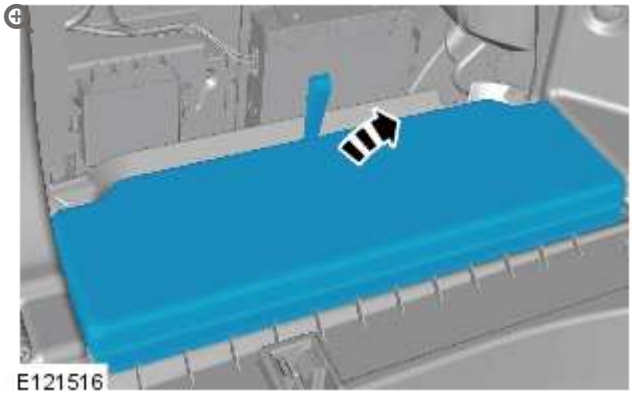

6.

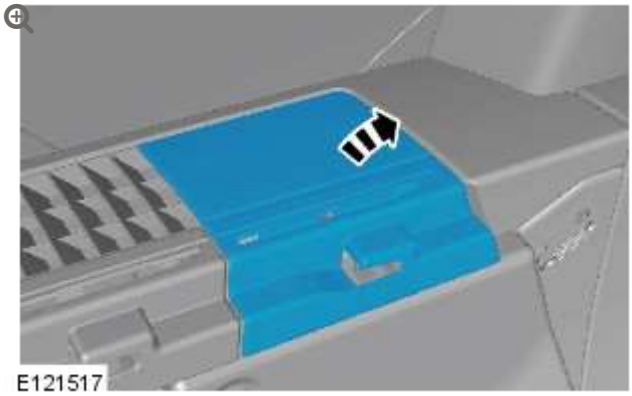

7.

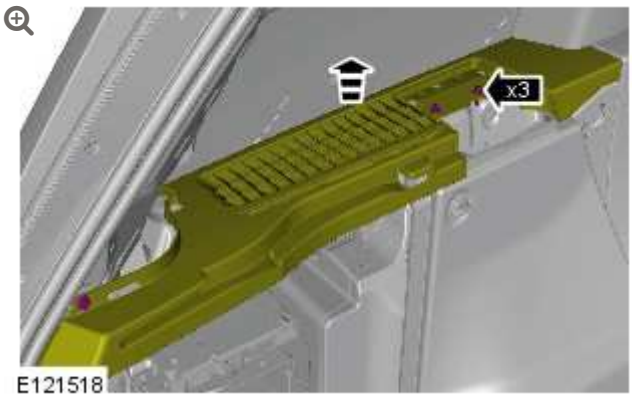

Torque: **10 Nm**

8.

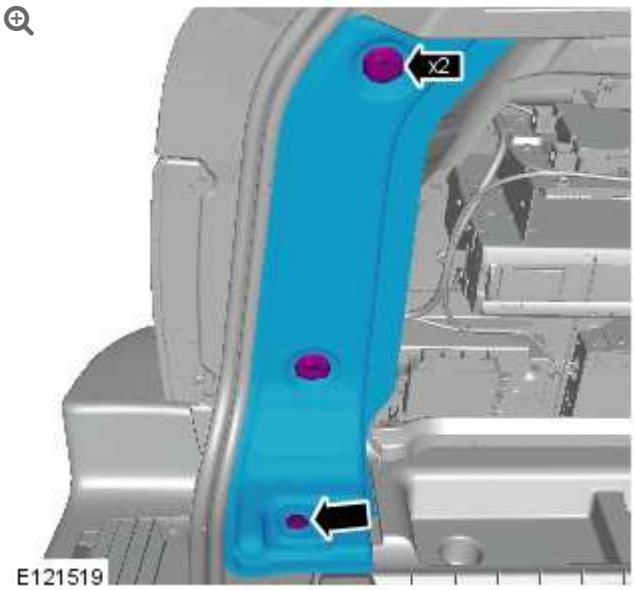

Torque: **10 Nm**

9.

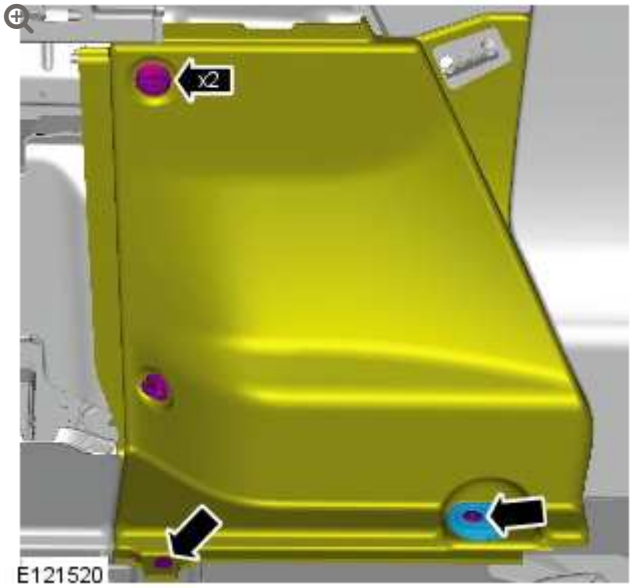

Torque: **10 Nm**

10.

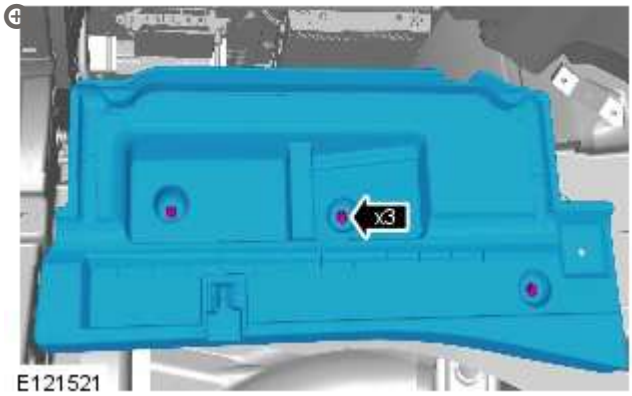

Torque: **10 Nm**

11.

CAUTIONS:

- Make sure that excessive force is not used. Failure to follow this instruction may result in damage to the vehicle.
- Take extra care not to damage the wiring harnesses.

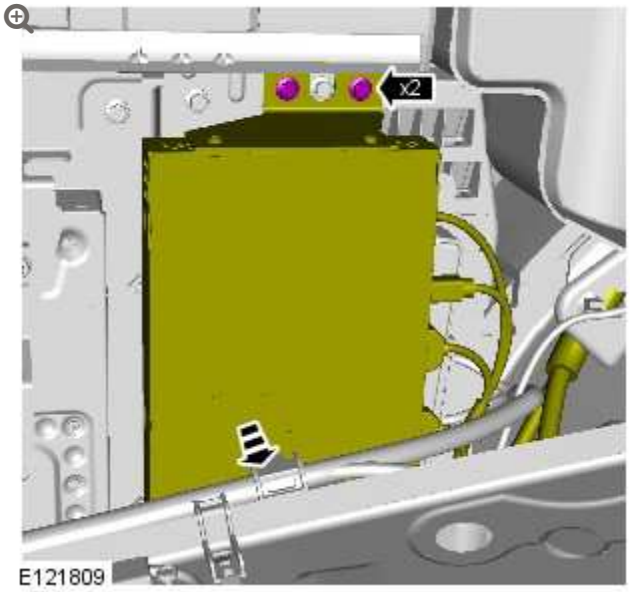

Torque: **10 Nm**

12.

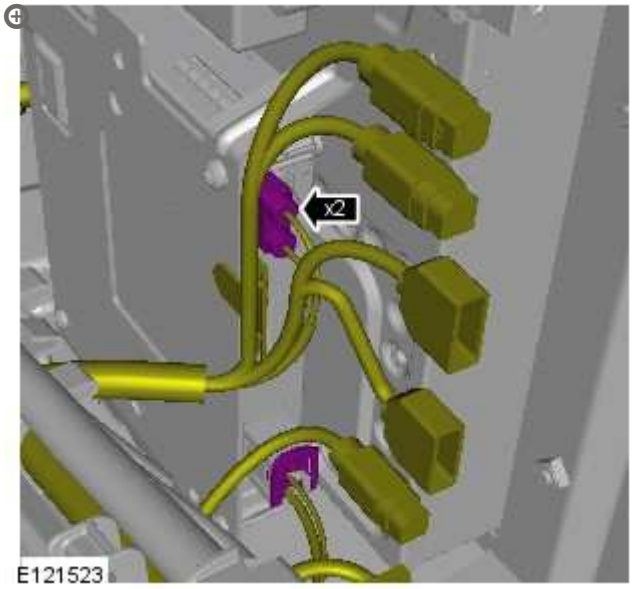

13.

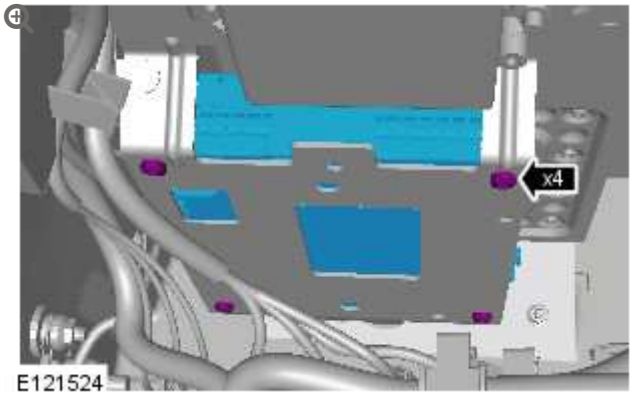

Torque: **10 Nm**

INSTALLATION

1. To install, reverse the removal procedure.

AUDIO UNIT

INTEGRATED CONTROL PANEL (ICP) (G1246641)

REMOVAL AND INSTALLATION

REMOVAL

WARNINGS:

- Persons working on the supplemental restraint system (SRS) must be fully trained and have been issued with the safety guidelines.
- Allow a period of 10 minutes to elapse after disconnecting the battery before undertaking any work on the SRS.
- The SRS electrical connectors are unique. DO NOT force, or attempt to connect electrical connectors to the wrong sockets.
- The correct procedures must always be used when working on SRS components.
- It is imperative that before any work is undertaken on the SRS system, the appropriate information is read thoroughly.
- Always disconnect both battery cables before beginning work on the SRS system. Disconnect the ground cable first. Never reverse connect the battery.
- Take extra care when handling SRS components.

NOTE:

Some variation in the illustrations may occur, but the essential information is always correct.

1. Make the air bag supplemental restraint system (SRS) safe. For additional information, refer to: Standard Workshop Practices (100-00, Description and Operation).

2.

Disconnect the battery ground cable.
For additional information, refer to: Specifications (414-00, Specifications).

3. Remove the instrument panel upper section.
For additional information, refer to: Instrument Panel Upper Section (501-12, Removal and Installation).

4.

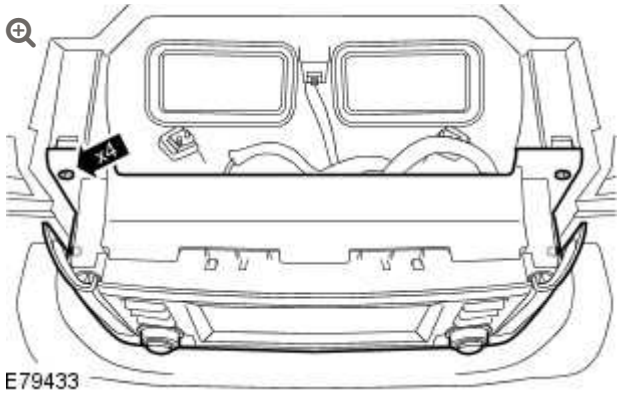

Remove the 4 screws securing the integrated control panel (ICP) bracket to the instrument panel.

5.

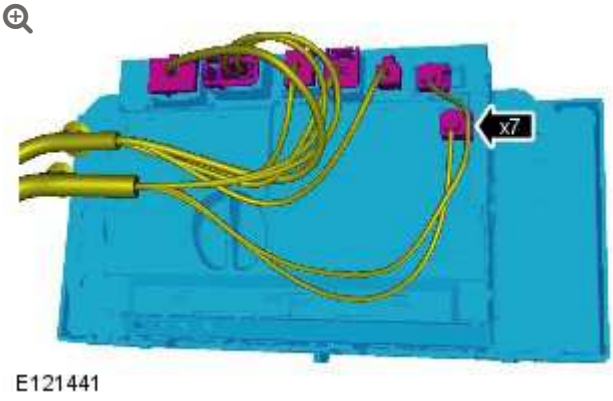

Remove the ICP assembly.

- Disconnect the electrical connectors.
- Disconnect the co-axial cables.

6.

NOTE:

Do not disassemble further if the component is removed for access only.

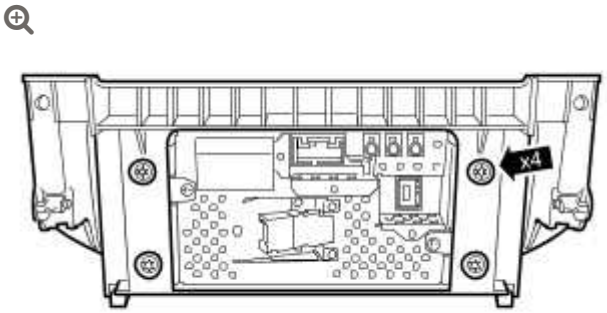

E79435

Remove the ICP from the ICP bracket.

- Remove the 4 screws.

INSTALLATION

1. Install the ICP to the ICP bracket.
   - Install the 4 screws.
2. Install the ICP assembly.
   - Connect the electrical connectors.
   - Connect the co-axial cables.
3. Install the screws securing the ICP to the instrument panel.
4. Install the instrument panel upper section.
   For additional information, refer to: Instrument Panel Upper Section (501-12, Removal and Installation).

5. Connect the battery ground cable.
   For additional information, refer to: Specifications (414-00, Specifications).

AUDIO UNIT

SATELLITE RADIO TUNER

(G1246452)

REMOVAL AND INSTALLATION

86.50.84	RECEIVER - SDARS - RENEW	ALL DERIVATIVES	0.3	USED WITHINS	+

REMOVAL

CAUTION:

Cover fiber optic cable connectors to minimize dust ingress and avoid bending the cables in a radius of less than 30 mm.

NOTE:

Removal steps in this procedure may contain installation details.

1. Disconnect the battery ground cable.
   Refer to: Specifications (414-00, Specifications).

2.

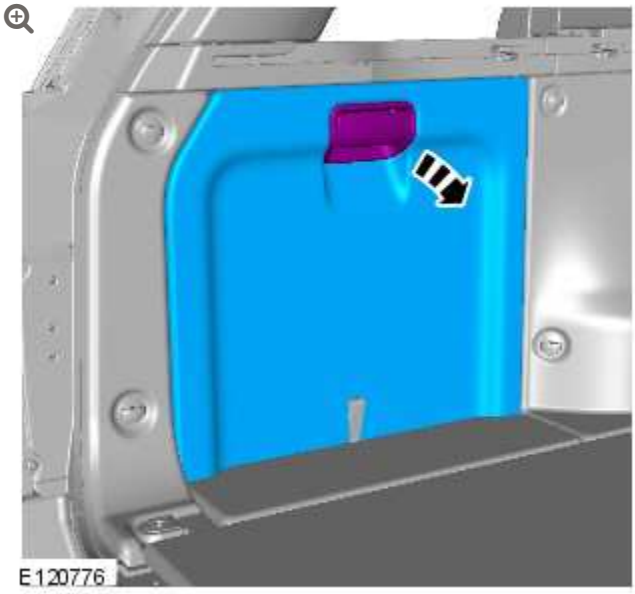

3. Refer to: Bluetooth Module (419-08, Removal and Installation).

4.

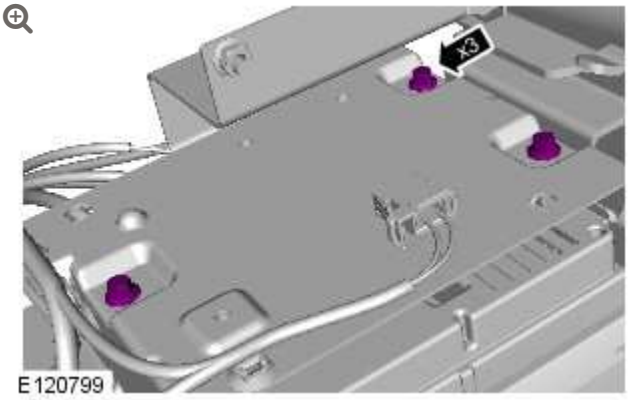

Torque: **8 Nm**

5.

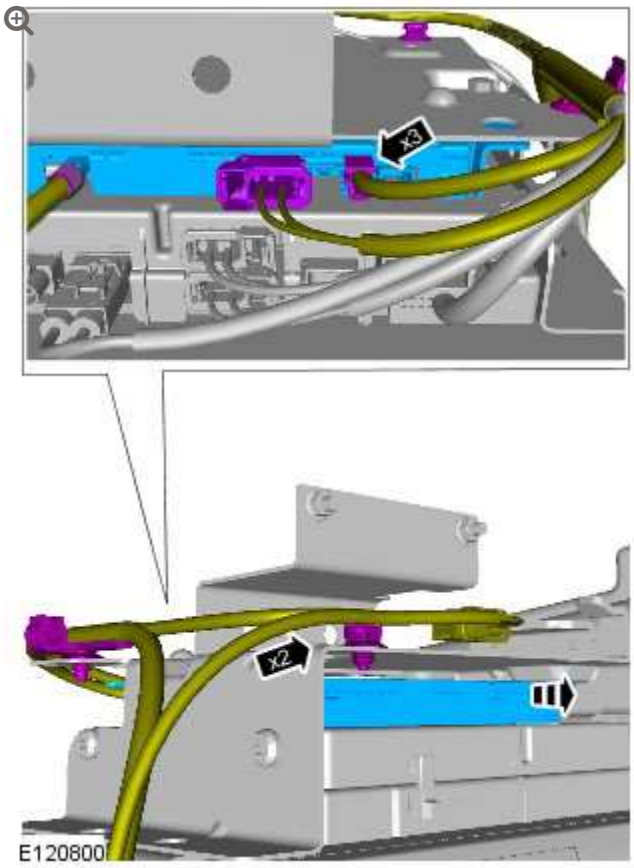

INSTALLATION

1. To install, reverse the removal procedure.
2. Using the diagnostic tool, follow the on-screen instructions and configure the satellite radio.

AUDIO UNIT

STEERING WHEEL AUDIO CONTROLS (G1240114)

REMOVAL AND INSTALLATION

REMOVAL

WARNINGS:

- Persons working on the supplemental restraint system (SRS) must be fully trained and have been issued with the safety guidelines.
- Allow a period of 10 minutes to elapse after disconnecting the battery before undertaking any work on the SRS.
- The SRS electrical connectors are unique. DO NOT force, or attempt to connect electrical connectors to the wrong sockets.
- The correct procedures must always be used when working on SRS components.
- It is imperative that before any work is undertaken on the SRS system, the appropriate information is read thoroughly.
- Always disconnect both battery cables before beginning work on the SRS system. Disconnect the ground cable first. Never reverse connect the battery.
- Take extra care when handling SRS components.

1. Make the air bag supplemental restraint system (SRS) safe.
   For additional information, refer to: Standard Workshop Practices (100-00, Description and Operation).

2. Disconnect the battery ground cable.
   For additional information, refer to: Specifications (414-00, Specifications).

3. Remove the driver air bag module.
   For additional information, refer to: Driver Air Bag Module (501-20, Removal and Installation).

4.

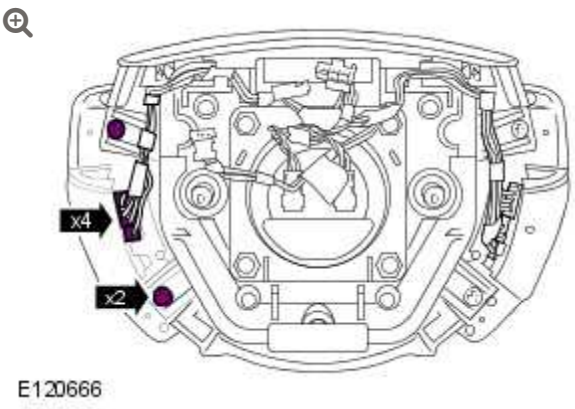

Remove the steering wheel audio controls.

- Disconnect the electrical connectors.
- Remove the 2 screws.

INSTALLATION

1. Install the steering wheel audio controls.
   - Connect the electrical connectors.
   - Install the 2 screws and tighten to 3 Nm (2 lb.ft).
2. Install the driver air bag module.
   For additional information, refer to: Driver Air Bag Module (501-20, Removal and Installation).
3. Connect the battery ground cable.
   For additional information, refer to: Specifications (414-00, Specifications).

AUDIO UNIT

TELEVISION (TV) AMPLIFIER AND FUEL FIRED BOOSTER HEATER TRANSCEIVER UNIT (G928046)

REMOVAL AND INSTALLATION

REMOVAL

1. Remove the access panel from the loadspace trim panel RH.

2. 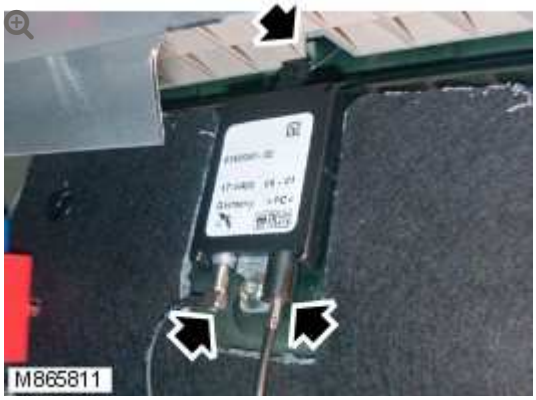

   Disconnect the 2 coaxial cables from the television (TV) amplifier and fuel fired booster heater transceiver unit.

3.

Release the TV amplifier and fuel fired booster heater transceiver unit.

4. Remove the TV amplifier and fuel fired booster heater transceiver unit.
   - Disconnect the electrical connector.

INSTALLATION

1. Install the TV amplifier and fuel fired booster heater transceiver unit.
   - Connect the electrical connector.
2. Secure the TV amplifier and fuel fired booster heater transceiver unit.
   - Tighten the bolt to 6 Nm (4 lb.ft).
3. Connect the TV amplifier and fuel fired booster heater transceiver unit.
4. Install the access panel to the loadspace trim panel RH.

AUDIO UNIT

TELEVISION (TV) RECEIVER (G1240239)

REMOVAL AND INSTALLATION

REMOVAL

NOTE:

Removal steps in this procedure may contain installation details.

1. Disconnect the battery ground cable.
   Refer to: Specifications (414-00, Specifications).

2. 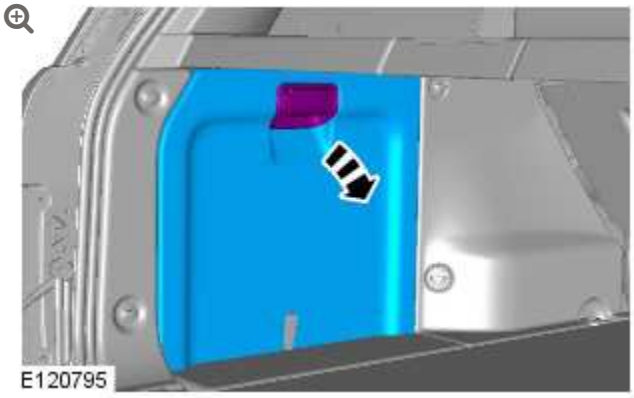

3.

CAUTIONS:

- Take extra care not to damage the wiring harnesses.
- Make sure that the fiber optic cables are not bent to a radius of less than 25 mm.

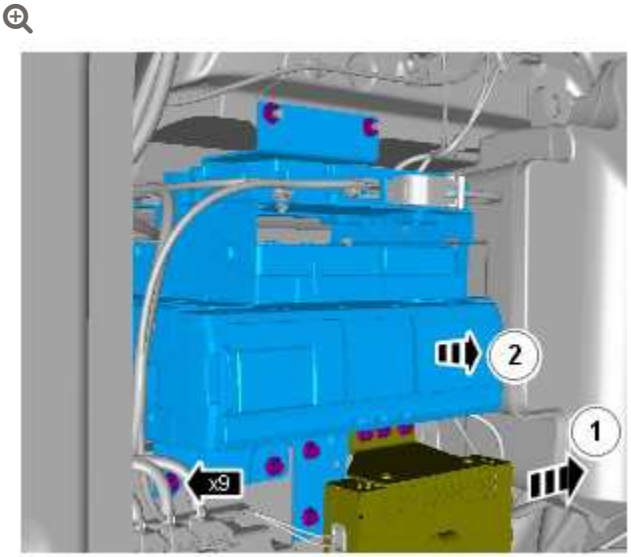

E120846

Torque: **10 Nm**

4.

NOTE:

Component illustrated, removed for clarity.

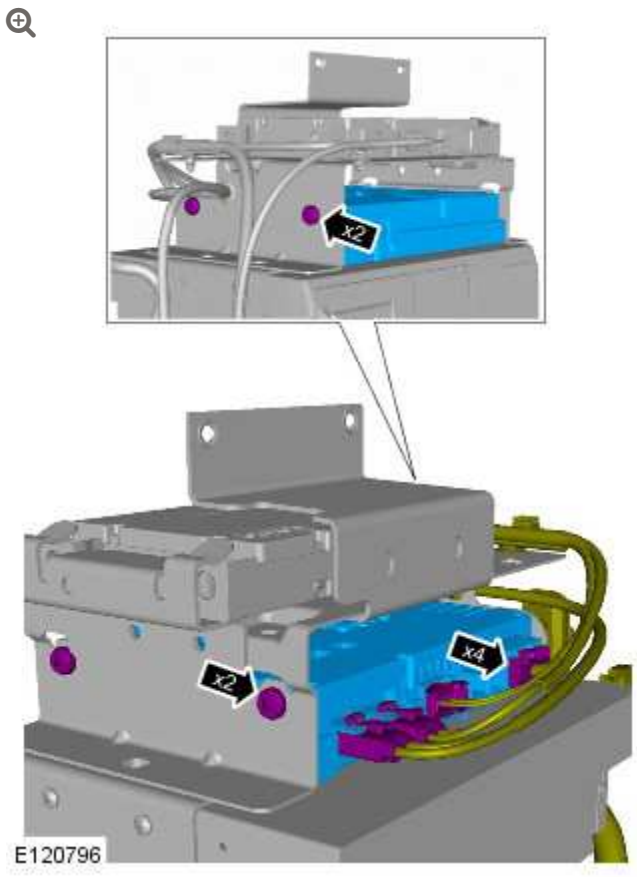

Torque: **10 Nm**

5.

NOTE:

New units must be configured using the Programmable Module Installation Routine in the diagnostic tool.

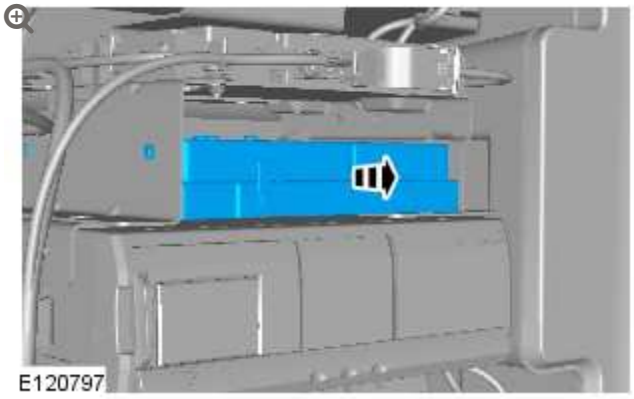

INSTALLATION

1. To install, reverse the removal procedure.

2012.0 RANGE ROVER (LM), 415-01

INFORMATION AND ENTERTAINMENT SYSTEM

DESCRIPTION AND OPERATION

Refer to the Audio section
For additional information, refer to: Audio System (415-01A, Description and Operation).
and the Video section
For additional information, refer to: Video System (415-07, Description and Operation).
for details of the Range rover Ultimate rear entertainment system.

IPAD DOCKING STATION – ULTIMATE (G1393707)

REMOVAL AND INSTALLATION

REMOVAL

NOTE:

Removal steps in this procedure may contain installation details.

1.



2.

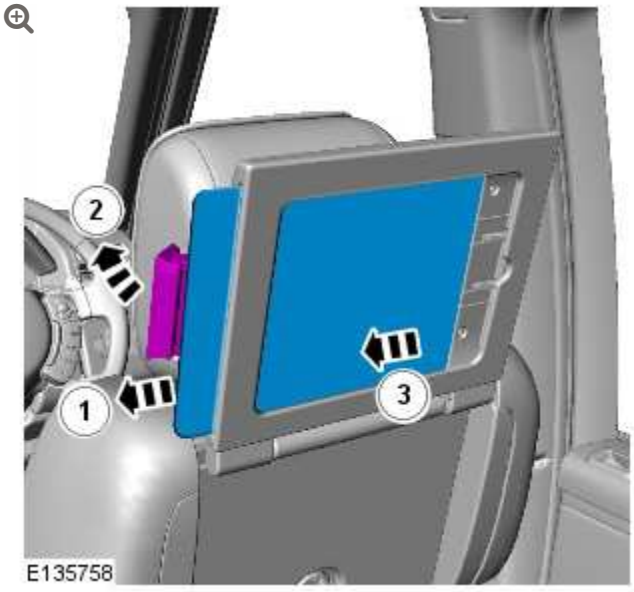

3.



4.

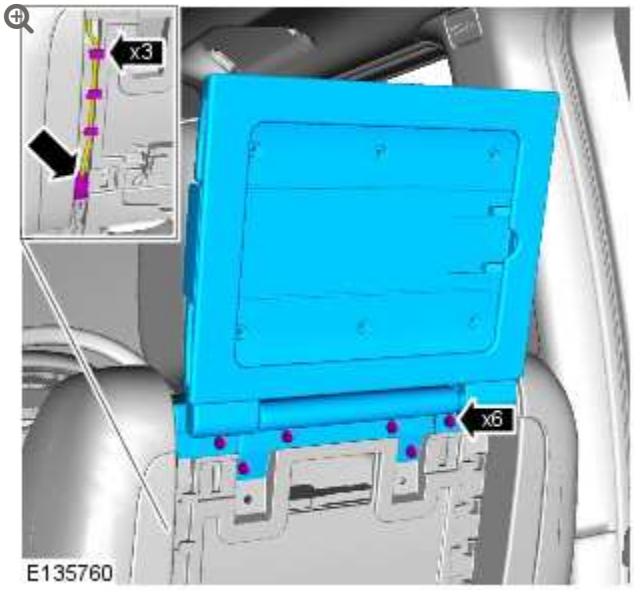

INSTALLATION

1. To install, reverse the removal procedure.

REAR AUDIO CONTROL RELAY – ULTIMATE (G1468513)

REMOVAL AND INSTALLATION

REMOVAL

NOTE:

Removal steps in this procedure may contain installation details.

1. Refer to: Rear Seat Center Console (501-12 Instrument Panel and Console, Removal and Installation).

2.

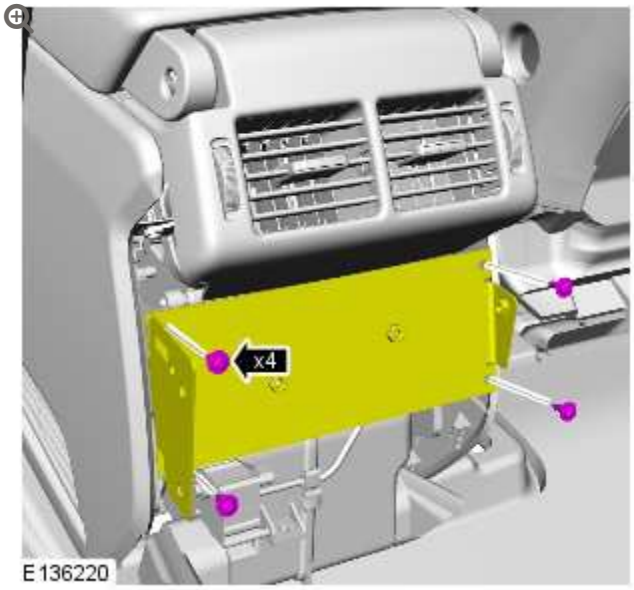

Torque: **9 Nm**

3.

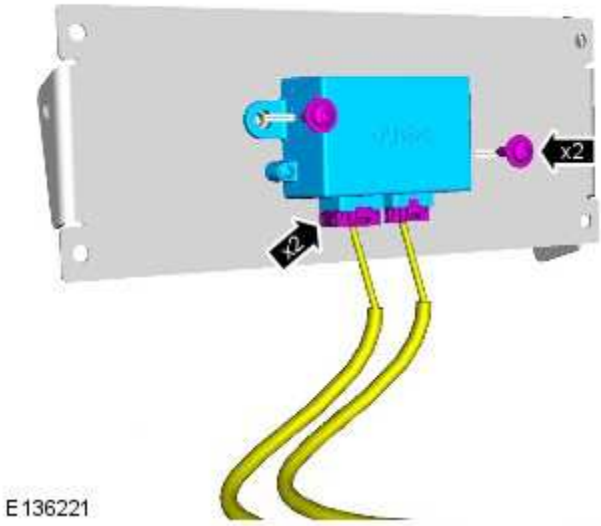

Torque: **5 Nm**

INSTALLATION

1. To install, reverse the removal procedure.

INFORMATION AND ENTERTAINMENT SYSTEM

REAR SEAT AUDIO CONTROL SWITCH – ULTIMATE (G1393708)

REMOVAL AND INSTALLATION

REMOVAL

NOTE:

Removal steps in this procedure may contain installation details.

1.



2.



3.

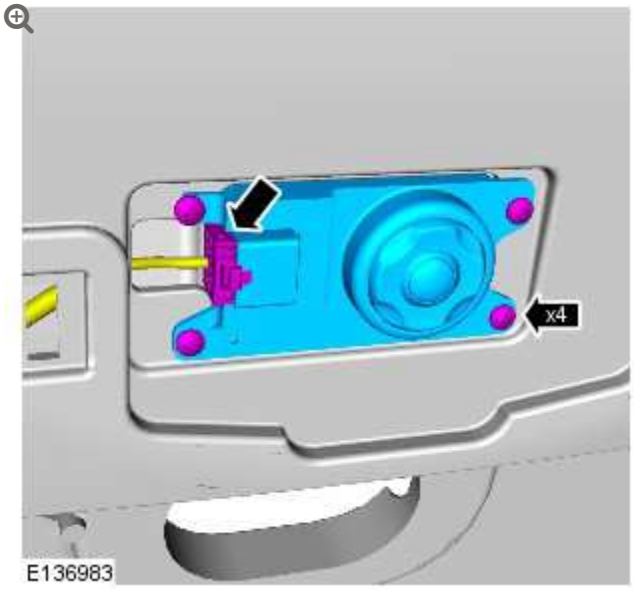

INSTALLATION

1. To install, reverse the removal procedure.

INFORMATION AND ENTERTAINMENT SYSTEM

DIAGNOSIS AND TESTING

PRINCIPLES OF OPERATION

For a detailed description and operation of the information and entertainment system, refer to the relevant description and operation section of the workshop manual.

INSPECTION AND VERIFICATION

CAUTION:

Diagnosis by substitution from a donor vehicle is **NOT** acceptable. Substitution of control modules does not guarantee confirmation of a fault and may also cause additional faults in the vehicle being checked and/or the donor vehicle.

NOTES:

- If the control module or a component is suspect and the vehicle remains under manufacturer warranty, refer to the Warranty Policy and Procedures manual, or determine if any prior approval programme is in operation, prior to the installation of a new module/component.
- When performing voltage or resistance tests, always use a digital multimeter accurate to three decimal places, and with an up-to-date calibration certificate. When testing resistance always take the resistance of the digital multimeter leads into account.
- All diagnostic equipment should comply with local legislation.
- Relevant diagnostic equipment should be regularly checked and calibrated according to the manufacturer's instructions.
- The workshop should be equipped with a full range of general equipment which is to be kept in good order and available to all suitably trained staff.
- Diagnostic equipment must meet the JLR Minimum Standards for general equipment as outlined in TOPIx.
- Check and rectify basic faults before beginning diagnostic routines involving pinpoint tests.

1. Verify the customer concern

2. Visually inspect for obvious signs of damage and system integrity

Visual Inspection

MECHANICAL	ELECTRICAL

MECHANICAL	ELECTRICAL
▪ Check all audio system modules ▪ Compact disc player jammed, not loading ▪ Scratched/dirty compact discs ▪ Speakers ▪ Switch(s) stuck or damaged ▪ Loose items in door pockets or glove box rattling	▪ Fuses ▪ Electrical harnesses ▪ Harness connectors ▪ Battery condition, state of charge

3. If an obvious cause for an observed or reported concern is found, correct the cause (if possible) before proceeding to the next step

4. If the cause is not visually evident, verify the symptom and refer to the Symptom Chart, alternatively check for Diagnostic Trouble Codes (DTCs) and refer to the DTC Index

5. Check DDW for open campaigns. Refer to the corresponding bulletins and SSMs which may be valid for the specific customer complaint and carry out the recommendations as required

SPEAKER DIAGNOSTICS

The symptom chart below should be used when diagnosing speaker faults and must be worked through prior to replacing any speakers

REPORTED SYMPTOM	SYMPTOM DESCRIPTION	POTENTIAL CAUSES (FOR GUIDANCE ONLY)	RECOMMENDED ACTION
▪ Speaker Buzz	▪ Periodic high frequency sound (sounds like an insect buzzing)	▪ Resonance in a trim component, e.g. NVH (noise, vibration and harshness) insulating cloth against speaker grill mesh	▪ 1. Replicate fault and confirm audio source(s) affected: DAB/CD/Bluetooth via phone/USB via phone/USB via iPod®/AM/FM radio

REPORTED SYMPTOM	SYMPTOM DESCRIPTION	POTENTIAL CAUSES (FOR GUIDANCE ONLY)	RECOMMENDED ACTION
		▪ Lack of retention of interior and exterior trim panels ▪ Loose harness/harness clips ▪ Labels vibrating against trim/nearby components ▪ Nearby modules vibrating against trim/BIW ▪ Mechanical failure of internal speaker component	▪ 2. If fault is specific to one source, audio source must be investigated further as a speaker failure in this instance is less likely, e.g. if issue is only seen on DAB, check DAB module is fully functioning correctly and software is up to date ▪ 3. Confirm if issue is heard on stereo and/or surround sound settings ▪ 4. Isolate the customer symptom to specific vehicle area using balance and fade audio settings. Check for any loose objects in the area, e.g. pens, keys, coins, etc ▪ 5. Check for any previous work carried out in this area by referring to DDW to help in diagnosing the issue ▪ 6. Check SDD/Topix for any audio related SSM/TSB and software updates. Carry out service updates as required. Retest to confirm if issue is resolved
▪ Speaker Rattle	▪ Sounds like loose components rattling around in / near the speaker	▪ Loose trim ▪ Loose items in or around speaker ▪ Loose fixings ▪ Debris inside speaker ▪ Loose harness	
▪ Speaker Hiss / Static	▪ Wideband noise (White Noise) / interference (such as experienced from a poorly tuned radio signal)	▪ Loose connection at speaker ▪ Loose connection at amplifier ▪ Loose connection at audio head unit ▪ Non JLR-approved equipment installed (e.g. USB cables) ▪ Damage to harness connected to the speaker ▪ Audio amplifier fault ▪ Audio head unit fault	

REPORTED SYMPTOM	SYMPTOM DESCRIPTION	POTENTIAL CAUSES (FOR GUIDANCE ONLY)	RECOMMENDED ACTION
▪ Speaker Crackle	▪ Electrical crackling noise (such as from a loose electrical connection) ▪ A rapid succession of short sharp noises ▪ Electrical interference	▪ Loose connection at speaker ▪ Loose connection at amplifier ▪ Loose connection at audio head unit ▪ Non JLR-approved equipment installed (e.g. USB cables) ▪ Damage to harness connected to the speaker ▪ Audio amplifier fault ▪ Audio head unit fault ▪ Internal electrical issue in speaker	▪ 7. Apply pressure by hand to door/trim panel and nearby modules (i.e. switchpacks) to confirm if there is a change in symptom sound ▪ 8. If issue is still present, or condition changes by applying pressure to the trim, remove internal trim and apply gentle pressure to components within the door to see if sound changes. This will also allow access to relevant speaker ▪ 9. If symptom condition is unchanged by applying pressure to the trim, examine trim to find source of audio issue and fix as appropriate using Squeaks and Rattle kit LTB00389. If audio issue is still present then move to step 10 ▪ 10. Check around front face of speaker for any loose items that may be touching the speaker, e.g.
▪ Speaker Distorted	▪ No significant extraneous noise, but audio reproduction is not as expected e.g. is not clean sounding	▪ Loose trim ▪ Non JLR-approved equipment installed (e.g. USB cables) ▪ Resonance in a trim component, e.g. NVH (noise, vibration and harshness) insulating cloth against speaker grill mesh ▪ Lack of retention of interior and exterior trim panels, nearby harnesses/components ▪ Mechanical failure of internal speaker component	

REPORTED SYMPTOM	SYMPTOM DESCRIPTION	POTENTIAL CAUSES (FOR GUIDANCE ONLY)	RECOMMENDED ACTION
			debris, loose fixings, etc ▪ 11. Check all speaker fixing screws are secure and correctly torqued, refer to workshop manual for correct torque figures ▪ 12. Check harness assembly is not vibrating against speaker unit or nearby trim/components and that it is clipped and routed correctly ▪ 13. Check harness assembly is not trapped or impeding the speaker unit and rectify as required ▪ 14. Check harness assembly connections are fully inserted and secured to speaker and amplifier. Also check harnesses are securely connected to nearby components ▪ 15. Check for harness damage and repair/replace as required ▪ 16. If a gasket is present on speaker, without removing the speaker visually

REPORTED SYMPTOM	SYMPTOM DESCRIPTION	POTENTIAL CAUSES (FOR GUIDANCE ONLY)	RECOMMENDED ACTION
			check it is correctly seated against speaker surface and not noticeably damaged ▪ 17. If audio issue is still present, remove speaker from mountings, retest speaker in hand to see if the fault is still present ▪ 18. Check for debris in speaker and remove. Retest speaker in hand ▪ 19. Check for damage to speaker and replace speaker if damage is present ▪ 20. Connect new speaker to harness, check new speaker in hand to ensure fault has been rectified. If issue has been resolved, reassemble trim with new trim retention clips ▪ 21. Check if audio issue is still present. If issue has been resolved, reassemble trim and retest. If issue is still present, contact JLR Dealer Technical Support following the guidelines in the

REPORTED SYMPTOM	SYMPTOM DESCRIPTION	POTENTIAL CAUSES (FOR GUIDANCE ONLY)	RECOMMENDED ACTION
			policy and procedures manual

PINPOINT TESTS FOR SUSPECTED SPEAKER FAULTS

NOTE:

See separate Pinpoint Tests (below) for sub-woofer faults

PINPOINT TEST A : NO SOUND OUTPUT FROM SPEAKER(S)	
TEST CONDITIONS	DETAILS/RESULTS/ACTIONS
A1: NO SOUND OUTPUT FROM SPEAKER(S)	
	1 Check speaker operation
	Is the harness connector securely connected to the audio head unit and the speaker unit(s)? **Yes** Proceed to the next step **GO to A2**. **No** Reconnect wiring harness to audio head unit/speaker unit(s)
A2: NO SOUND OUTPUT FROM SPEAKER(S)	
	1 Check audio head unit operation
	Is the audio head unit operational? **Yes** Proceed to the next step **GO to A3**. **No** Check the integrity of the power supply circuits/fuses to the audio head unit and rectify as required
A3: NO SOUND OUTPUT FROM SPEAKER(S)	
	1 Check which speakers are operational
	Are all speakers working? **Yes**

PINPOINT TEST A : NO SOUND OUTPUT FROM SPEAKER(S)	
	Proceed to the next step GO to Pinpoint Test **B.** **No** Use the fader control to direct audio output to different speaker locations to establish which units are non-operational. Refer to the electrical circuit diagrams and check the circuits between the audio head unit and the affected speaker units for short circuit to ground, open circuit, high resistance. Repair circuit(s) as required. If fault persists, replace non-operational speaker unit(s) as required

PINPOINT TEST B : POOR OR WEAK SOUND OUTPUT FROM SPEAKER (S)	
TEST CONDITIONS	DETAILS/RESULTS/ACTIONS
B1: POOR OR WEAK SOUND OUTPUT FROM SPEAKER(S)	
	1 Check connections to speaker units
	Are the connectors inserted securely into the speaker units? **Yes** Proceed to the next step **GO to B2**. **No** Ensure all connectors are securely attached to the speaker units
B2: POOR OR WEAK SOUND OUTPUT FROM SPEAKER(S)	
	1 Check integrity of vehicle power supply fuses
	Are the vehicle/audio head unit power supply fuses functional? **Yes** Proceed to the next step **GO to B3**. **No** Replace fuse(s) as required
B3: POOR OR WEAK SOUND OUTPUT FROM SPEAKER(S)	
	1 Check power and ground circuits to the infotainment system components
	Are all the necessary power and ground feeds present? **Yes** Proceed to the next step **GO to B4**. **No** Refer to the electrical circuit diagrams and check the infotainment power and ground circuits for short circuit to ground, open circuit, high resistance. Repair circuit(s) as required

PINPOINT TEST B : POOR OR WEAK SOUND OUTPUT FROM SPEAKER (S)	
B4: POOR OR WEAK SOUND OUTPUT FROM SPEAKER(S)	
	1 Check power supply voltage at power supply connectors
	Is the power supply voltage measured at the power supply connectors between 12 and 14 volts? **Yes** No further action **No** Refer to the electrical circuit diagrams and check the infotainment power supply circuits for short circuit to ground, open circuit, high resistance. Repair circuit(s) as required. Refer to the relevant section of workshop manual and battery care manual. Check battery state of charge and starting/charging system performance and rectify as required

PINPOINT TEST C : SPEAKER VIBRATING (BUZZING) EXCESSIVELY	
TEST CONDITIONS	DETAILS/RESULTS/ACTIONS
C1: SPEAKER VIBRATING (BUZZING) EXCESSIVELY	
	1 Check for extreme bass/treble settings
	Is the audio system output settings for bass and/or treble set too high? **Yes** Adjust settings to appropriate levels **No** Proceed to the next step GO to C2.
C2: SPEAKER VIBRATING (BUZZING) EXCESSIVELY	
	1 Check speaker unit(s) fixing screws are securely fastened
	Are all speaker fixing screws fully secured to the surrounding trim? **Yes** Proceed to the next step GO to C3. **No** Tighten the fixing screws to the correct torque as directed in the workshop manual
C3: SPEAKER VIBRATING (BUZZING) EXCESSIVELY	
	1 Check if the wiring harness is resting against the internal surface of the speaker

PINPOINT TEST C : SPEAKER VIBRATING (BUZZING) EXCESSIVELY	
	Is there any cabling or other parts of the wiring harness resting against the internal surface of the speaker? **Yes** Re-route and secure the wiring harness so that it is not resting against any internal surfaces of the speaker **No** Proceed to the next step **GO to C4**.
C4: SPEAKER VIBRATING (BUZZING) EXCESSIVELY	
	1 Check security of trim, harnesses and paper labels in the vicinity of the speaker units
	Are these items secure in the vicinity of the speaker units? **Yes** Proceed to the next step **GO to C5**. **No** Check whether gentle contact with these items, where appropriate, relieves symptoms. If symptoms are relieved, fix source securely and prevent vibration
C5: SPEAKER VIBRATING (BUZZING) EXCESSIVELY	
	1 Remove speaker and hold in hand, taking care not to hold any moving parts of the assembly and not to damage the foam gaskets
	Does buzzing persist with speaker in hand? **Yes** Check for obvious debris in speaker. If there is debris and no damage, remove debris and retest for buzzing – if buzzing is fixed re-fit speaker, else replace speaker. If speaker is damaged,**GO to C6**. **No** Re-fit speaker and further investigate rattle due of nearby trim, modules, harnesses and components
C6: SPEAKER VIBRATING (BUZZING) EXCESSIVELY	
	1 Check for an obvious source of damage to prevent any replacement also becoming damaged
	Is there an obvious source of the speaker damage? **Yes** Remedy source of damage and fit replacement speaker **No** Fit replacement speaker
C7: AUDIO OUTPUT DISTORTED	
	1 Check for extreme bass/treble settings

PINPOINT TEST C : SPEAKER VIBRATING (BUZZING) EXCESSIVELY	
	Is the audio system output settings for bass and/or treble set too high? **Yes** Adjust settings to appropriate levels **No** No further action

Pinpoint Tests For Suspected Sub-Woofer Faults

NOTE:

See separate Pinpoint Tests (above) for other speaker faults

PINPOINT TEST D : NO SOUND OUTPUT FROM SUB-WOOFER	
TEST CONDITIONS	DETAILS/RESULTS/ACTIONS
D1: NO SOUND OUTPUT FROM SUB-WOOFER	
	1 Check sub-woofer operation
	Is the harness connector securely connected to the audio amplifier module and the sub-woofer unit? **Yes** Proceed to the next step **GO to D2**. **No** Reconnect wiring harness to audio amplifier module/sub-woofer unit
D2: NO SOUND OUTPUT FROM SUB-WOOFER	
	1 Check Integrated Audio Module (IAM) operation
	Is the integrated audio module operational? **Yes** Proceed to the next step **GO to D3**. **No** Check the integrity of the power supply circuits/fuses to the integrated audio module and rectify as required. Check the integrated audio module for related DTCs and refer to the relevant DTC index
D3: NO SOUND OUTPUT FROM SUB-WOOFER	
	1 Check which sub-woofers are operational

PINPOINT TEST D : NO SOUND OUTPUT FROM SUB-WOOFER	
	Are all sub-woofers working? **Yes** Proceed to the next step **GO to D4**. **No** Use the fader control to direct audio output to different sub-woofer locations to establish which units are non-operational. Refer to the electrical circuit diagrams and check the circuits between the audio amplifier module and the affected sub-woofer units for short circuit to ground, open circuit, high resistance. Repair circuit(s) as required. If fault persists, replace non-operational sub-woofer unit(s) as required
D4: NO SOUND OUTPUT FROM SUB-WOOFER	
	1 Check for any visible loose harness connections on sub-woofer drive unit
	Are there any visible loose harness connections (ie: loose wires / pins) on the sub-woofer **Yes** Replace the sub-woofer unit(s) as required **No** No further action

PINPOINT TEST E : POOR OR WEAK SOUND OUTPUT FROM SUB-WOOFER(S)	
TEST CONDITIONS	**DETAILS/RESULTS/ACTIONS**
E1: POOR OR WEAK SOUND OUTPUT FROM SUB-WOOFER	
	1 Check connections to sub-woofer units
	Are the connectors inserted securely into the sub-woofer units? **Yes** Proceed to the next step **GO to E2**. **No** Ensure all connectors are securely attached to the sub-woofer units
E2: POOR OR WEAK SOUND OUTPUT FROM SUB-WOOFER	
	1 Check integrity of vehicle power supply fuses
	Are the vehicle/audio amplifier module power supply fuses functional? **Yes** Proceed to the next step **GO to E3**. **No**

PINPOINT TEST E : POOR OR WEAK SOUND OUTPUT FROM SUB-WOOFER(S)	
	Replace fuse(s) as required
E3: POOR OR WEAK SOUND OUTPUT FROM SUB-WOOFER(S)	
	1 Check power and ground circuits to the infotainment system components
	Are all the necessary power and ground feeds present? **Yes** Proceed to the next step **GO to E4**. **No** Refer to the electrical circuit diagrams and check the infotainment power and ground circuits for short circuit to ground, open circuit, high resistance. Repair circuit(s) as required
E4: POOR OR WEAK SOUND OUTPUT FROM SUB-WOOFER(S)	
	1 Check power supply voltage at power supply connectors
	Is the power supply voltage measured at the power supply connectors between 12 and 14 volts? **Yes** No further action **No** Refer to the electrical circuit diagrams and check the infotainment power supply circuits for short circuit to ground, open circuit, high resistance. Repair circuit(s) as required. Refer to the relevant section of workshop manual and battery care manual. Check battery state of charge and starting/charging system performance and rectify as required

PINPOINT TEST F : SUB-WOOFER VIBRATING (BUZZING) EXCESSIVELY	
TEST CONDITIONS	**DETAILS/RESULTS/ACTIONS**
F1: SUB-WOOFER VIBRATING (BUZZING) EXCESSIVELY	
	1 Check for extreme bass/treble settings
	Is the audio system output settings for bass and/or treble set too high? **Yes** Adjust settings to appropriate levels **No** Proceed to the next step **GO to F2**.
F2: SUB-WOOFER VIBRATING (BUZZING) EXCESSIVELY	

PINPOINT TEST F : SUB-WOOFER VIBRATING (BUZZING) EXCESSIVELY	
	1 Check sub-woofer unit(s) fixing screws to body are securely fastened
	Are all sub-woofer fixing screws fully secured to the body ? **Yes** Proceed to the next step **GO to F3**. **No** Tighten the fixing screws to the correct torque as directed in the workshop manual
F3: SUB-WOOFER VIBRATING (BUZZING) EXCESSIVELY	
	1 Check security of trim, harnesses and paper labels in the vicinity of the subwoofer(s)
	Are these items secure in the vicinity of the subwoofer(s)? **Yes** Proceed to the next step **GO to F4**. **No** Check whether gentle contact with these items, where appropriate, relieves symptoms. If symptoms are relieved, fix source securely and prevent vibration
F4: SUB-WOOFER VIBRATING (BUZZING) EXCESSIVELY	
	1 Remove subwoofer unit(s) (do not disassemble part) and hold in hand, taking care not to hold any moving parts of the assembly and not to damage the foam gaskets
	Does buzzing persist with subwoofer unit(s) in hand? **Yes** Check for obvious debris in subwoofer unit(s). If there is debris and no damage, remove debris and retest for buzzing – if buzzing is fixed re-fit subwoofer unit(s), else replace subwoofer unit(s). If subwoofer unit(s) damaged, **GO to F5**. **No** Re-fit subwoofer unit(s) and further investigate rattle due of nearby trim, modules, harnesses and components
F5: SUB-WOOFER VIBRATING (BUZZING) EXCESSIVELY	
	1 Check for an obvious source of damage to prevent any replacement also becoming damaged
	Is there an obvious source of the subwoofer unit(s) damage? **Yes** Remedy source of damage and fit replacement subwoofer unit(s) **No** Fit replacement subwoofer unit(s)

PINPOINT TEST G : SUB-WOOFER AUDIO OUTPUT DISTORTED	
TEST CONDITIONS	DETAILS/RESULTS/ACTIONS
G1: SUB-WOOFER AUDIO OUTPUT DISTORTED	
	1 Check for extreme bass/treble settings
	Is the audio system output settings for bass and/or treble set too high? **Yes** Adjust settings to appropriate levels **No** Re-check possible sub-woofer faults GO to Pinpoint Test D.

DTC INDEX

For a list of Diagnostic Trouble Codes (DTCs) that could be logged on this vehicle, please refer to Section 100-00.

ANTENNA

ANTENNA MODULE (G300886)

REMOVAL AND INSTALLATION

REMOVAL

1. Remove the access panel from the loadspace trim panel LH.

2. 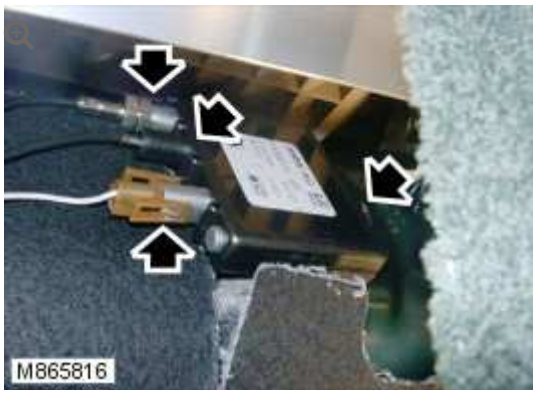

   Disconnect the antenna module coaxial cable connector.

3. Disconnect the antenna module electrical connector.

4. Disconnect the coaxial cable connector.
   - Release the nut.

5. Remove the antenna module.

- Remove the bolt.

INSTALLATION

1. Install the antenna module.
   - Tighten the bolt to 6 Nm (4 lb.ft).
2. Connect the antenna module coaxial cable connector.
   - Tighten the nut.
3. Connect the antenna module coaxial cable connector.
4. Connect the antenna module electrical connector.
5. Install the access panel to the loadspace trim panel LH.

ANTENNA

DESCRIPTION AND OPERATION

The antenna systems fitted to the vehicle comprise:

- AM (glass mounted)
- FM (glass mounted)
- Double FM 2 and 3 diversity (glass mounted, where fitted)
- TV (glass mounted, where fitted)
- GPS (global positioning system) antenna (roof mounted pod)
- SDARS (roof mounted NAS only)
- VICS antenna and beacon antenna (Japan only where fitted).
- DAB antenna (roof mounted pod and glass mounted where fitted).

SCREEN AERIAL COMPONENTS

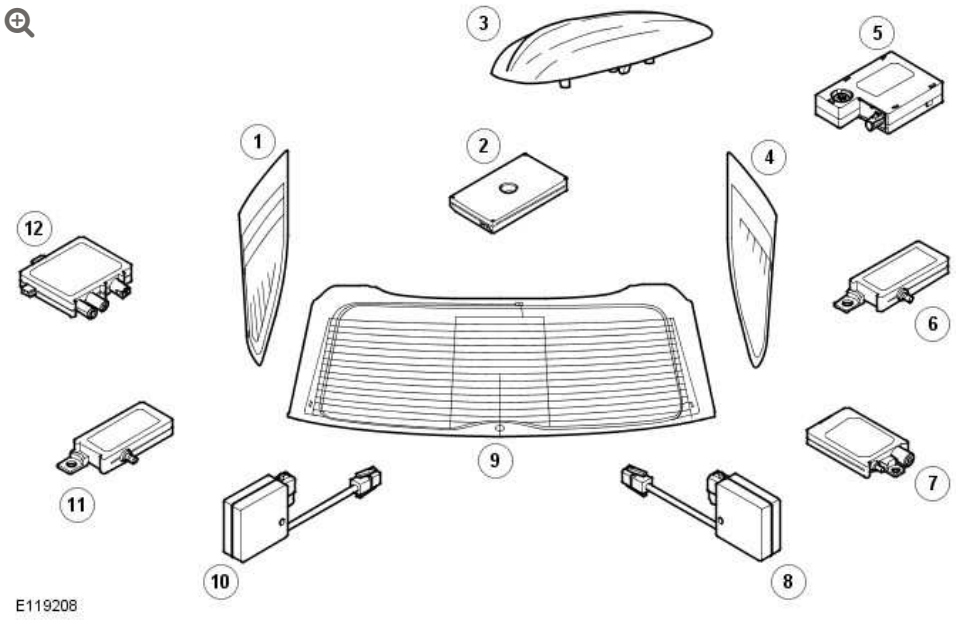

ITEM	DESCRIPTION
1	Side screen Television and diversity radio aerials
2	Rear screen aerial amplifier
3	Roof pod (GPS, DAB band-L and SDARS)
4	Side screen televison and DAB aerials
5	DAB aerial amplifier
6	Television aerial amplifier (vehicles with TV fitted only)
7	Alternative television aerial for telestart (vehicles with TV and telestart fitted only)
8	Rear screen aerial suppressor
9	Rear screen radio aerial
10	Rear screen aerial suppressor
11	Television aerial amplifier
12	Side screen radio diversity aerial amplifier

AM/FM ANTENNAS

FM Antenna Amplifier

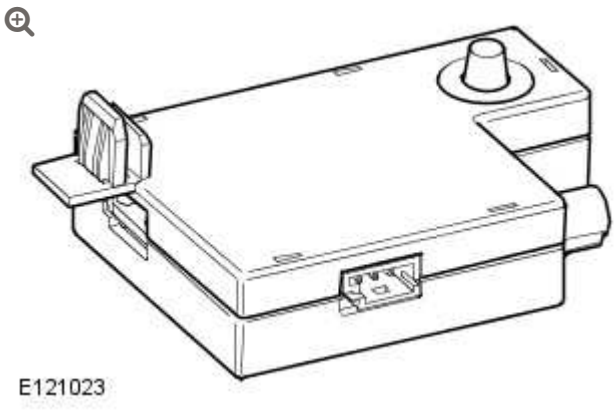

The AM (amplitude modulation)/FM (frequency modulation) antennas are located in the side and rear widow. All vehicles are equipped with FM diversity tuning. This system ensures that the best quality signal is used by the radio system to ensure the best possible FM reception. The standard AM/FM antenna is screen mounted in the LH (left-hand) rear side window and is connected to an antenna amplifier located above the screen. The diversity system uses the same side window antenna and amplifier but also uses a rear heated screen element antenna and an FM antenna amplifier mounted at the top of the rear screen in the tail gate for FM 2 and 3.

DIGITAL AUDIO BROADCASTING (DAB) ANTENNAS

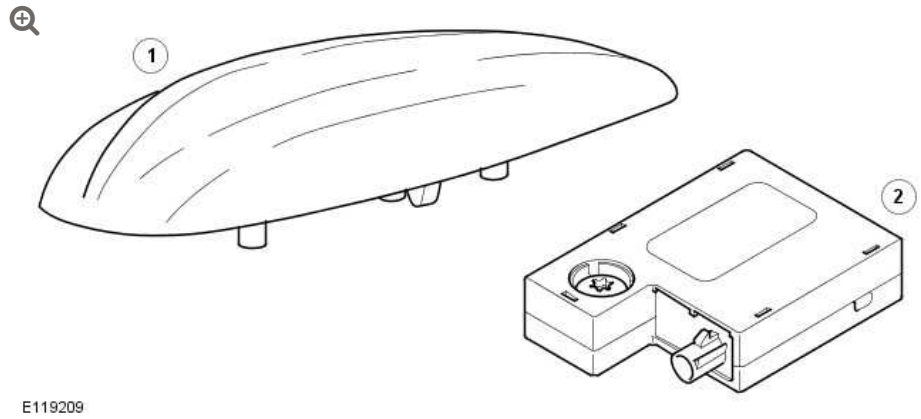

ITEM	DESCRIPTION
1	Roof pod DAB band-L
2	Antenna amplifier DAB band-III

The DAB antennas are located in the RH (right-hand) rear side window (band-III) and in the roof mounted pod (band-L). The two antenna circuits each have a co-axial connection to the DAB module. DAB signals are transmitted on either DAB band III (174 - 240 MHz) or DAB band-L (1452 - 1492 MHz). Some countries may only use the band III signals, while others may only use the band-L signals. Some countries use both frequency ranges within the same geographical area. The type of DAB signal received depends on the vehicle market location. The DAB antennas are designed with 50 ohm output impedance. The DAB receiver is fitted with 50 ohm fakra II connectors to ensure compatibility with the antenna. For optimum performance 50 ohm low loss coaxial cable is used between the antenna and receiver.

VICS/TMC ANTENNA MODULE

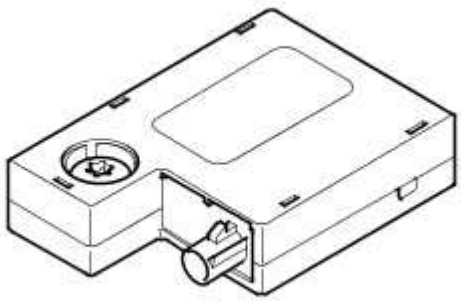

E48087

The Traffic Message Channel (TMC) signals are received through the normal radio signals via the RDS network. The signals are routed separately form the radio signals via a separate antenna amplifier located on the RH rear side window.
For additional information, refer to: Navigation System (419-07 Navigation System, Description and Operation).
. The module is fitted to the tailgate inner panel above the rear windscreen.

TV ANTENNA

TV Antenna Amplifier

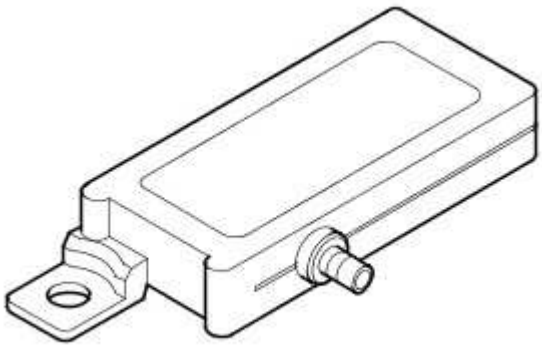

E121100

Where a television system is specified there are four TV antenna elements two in each of the rear side windows. Each element has an antenna amplifier which is connected to the TV tuner module by a coaxial cable.
For additional information, refer to: Video System (415-07 Video System, Description and Operation).

If a vehicles fitted with telestart the RH module is a combined TV/telestart amplifier.

ROOF MOUNTED POD

Roof Mounted Antenna Pod

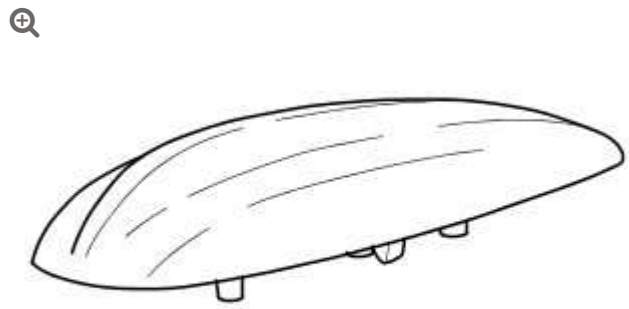

E120935

The roof mounted pod contains several antennas:

- GPS antenna
- SDARS antenna (NAS only).
- DAB antenna (band-L)

The roof mounted pod is a standard fit on all vehicles.

SATELLITE DIGITAL AUDIO RADIO SYSTEM (SDARS) ANTENNA (NAS ONLY)

The SDARS antenna is located in the roof mounted pod, which is located in the center of the roof at the rear of the vehicle. The

SDARS antenna has one connection to the SDARS tuner for both satellite transmissions.

Antenna element:

- A printed dipole antenna for receiving satellite signals

The two antennas allow the system to receive SDARS transmissions in built up areas where signals form satellites would normally be blocked.
For additional information, refer to: Audio System (415-01A Audio Unit, Description and Operation).

GPS ANTENNA

The GPS antenna is located in the roof mounted pod. The GPS antenna is connected to the navigation computer by a coaxial cable.
For additional information, refer to: Navigation System (419-07 Navigation System, Description and Operation).

DIGITAL AUDIO BROADCASTING ANTENNA

The DAB band-L antenna is mounted within the roof mounted pod.

VICS ANTENNAS (JAPAN ONLY)

VICS Beacon Antenna



The VICS control module is intergrated into the touch screen display.The Control module uses an infra red beacon antenna located in the middle on top of the instrument panel adjacent to the sunlight sensor and an antenna amplifier located on the RH top of the tailgate.

For additional information, refer to: Navigation System (419-07 Navigation System, Description and Operation).

SPEAKERS

SPECIFICATIONS

Torque Specifications

DESCRIPTION	NM	LB-FT
Tailgate speaker to casing bolts	10	7
Tailgate speaker to tailgate Torx screws	10	7

SPEAKERS

FRONT DOOR SPEAKER

(G428407)

REMOVAL AND INSTALLATION

86.50.10	SPEAKER – FRONT DOOR – RENEW	ALL DERIVATIVES	0.5	USED WITHINS	+

REMOVAL

1. Remove the front door trim panel.
   For additional information, refer to: Front Door Trim Panel (501-05, Removal and Installation).

2. Remove the front door speaker wiring harness.

3.

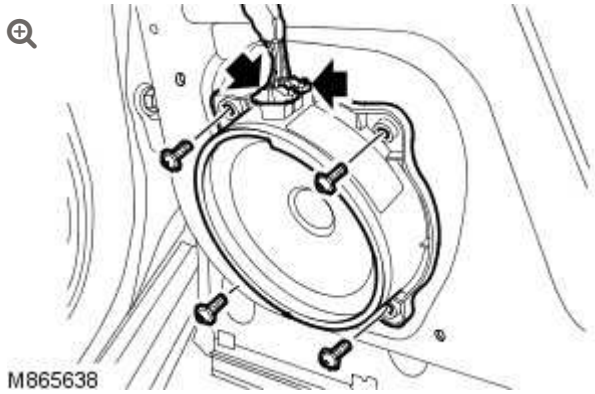

Remove the front door speaker.

- Remove the 4 screws.
- Disconnect the electrical connector.

INSTALLATION

1. Install the front door speaker.
   - Connect the electrical connector.
   - Install the screws.
2. Install the front door speaker wiring harness.
3. Install the front door trim panel.
   For additional information, refer to: Front Door Trim Panel (501-05, Removal and Installation).

SPEAKERS

FRONT DOOR TRIM PANEL SPEAKER (G1531995)

REMOVAL AND INSTALLATION

REMOVAL

1. Refer to: Front Door Trim Panel (501-05 Interior Trim and Ornamentation, Removal and Installation).

2. **CAUTION:**

   Make sure that only the head of the fixing is removed. Do not drill any deeper then necessary.

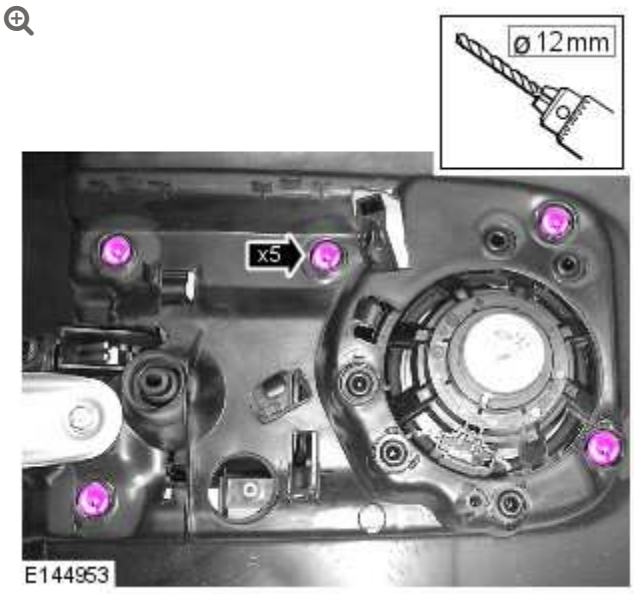

3.

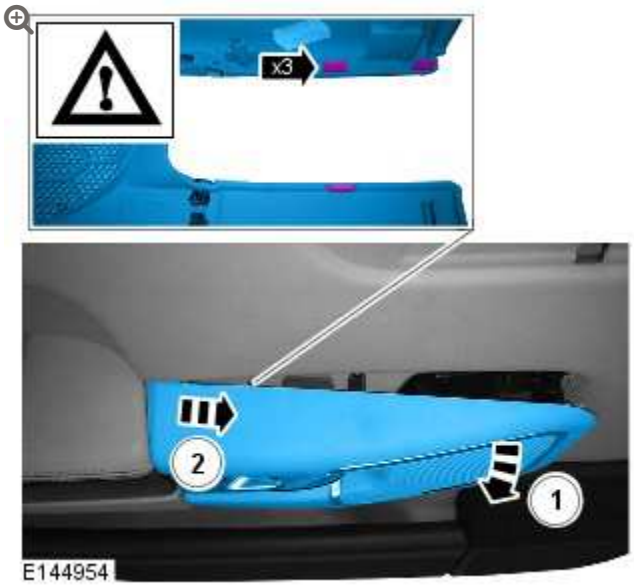

4.

CAUTION:

Make sure that only the head of the fixing is removed.
Do not drill any deeper then necessary.

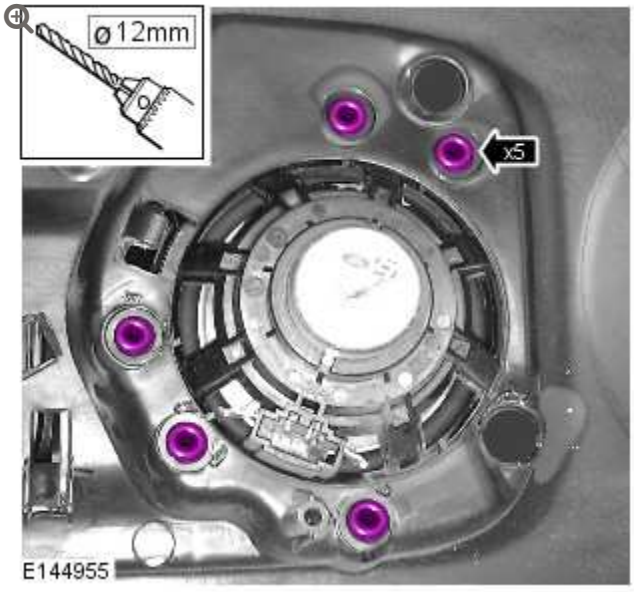

5.

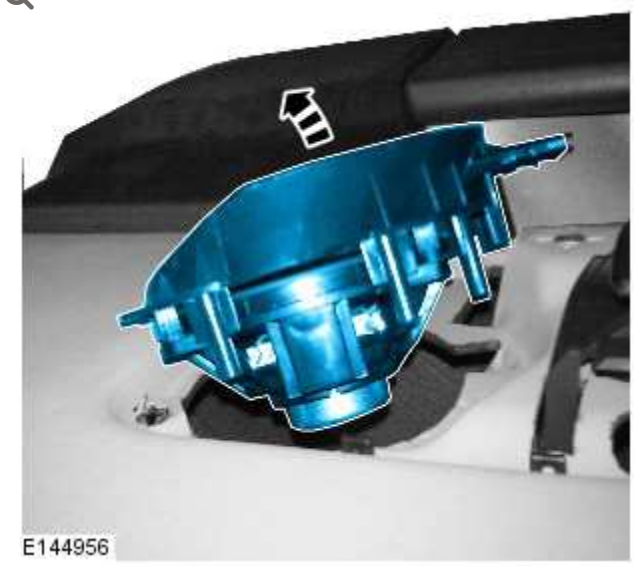

6. **NOTE:**

Remove the speaker from the speaker bracket.



E144957

INSTALLATION

1.

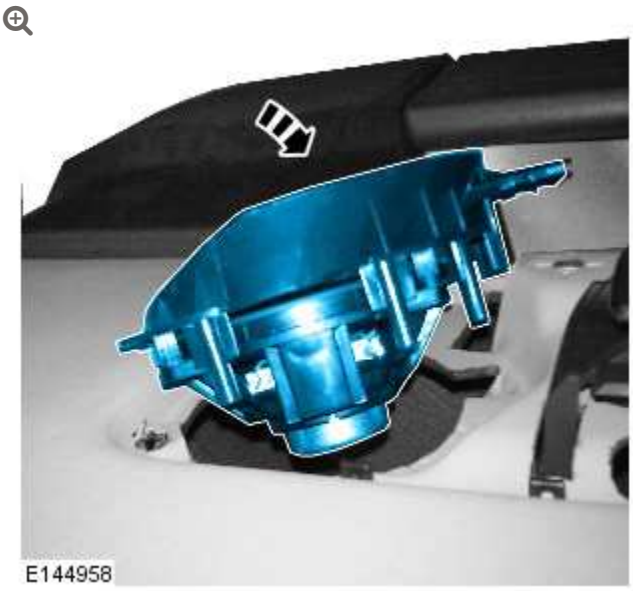
E144958

2.

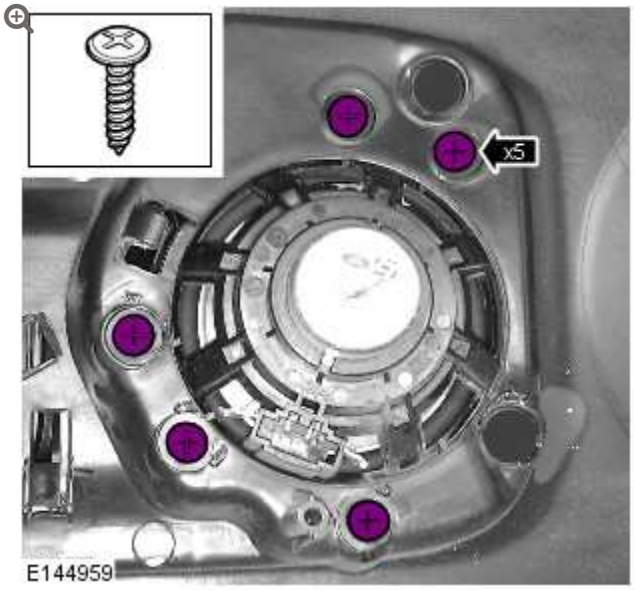

3.

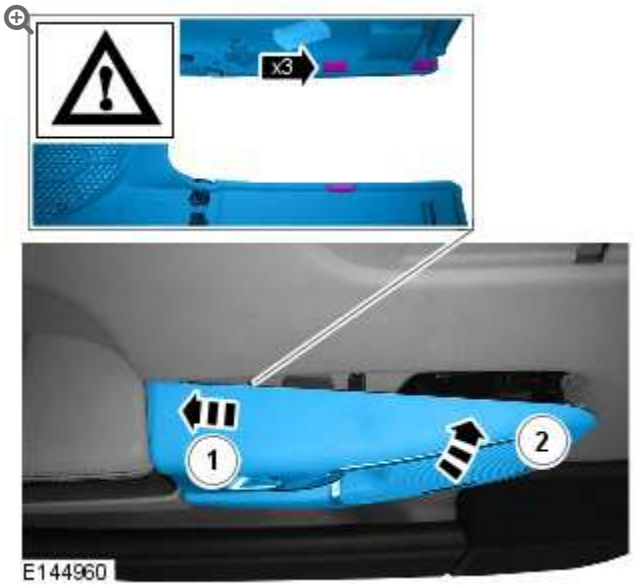

4.

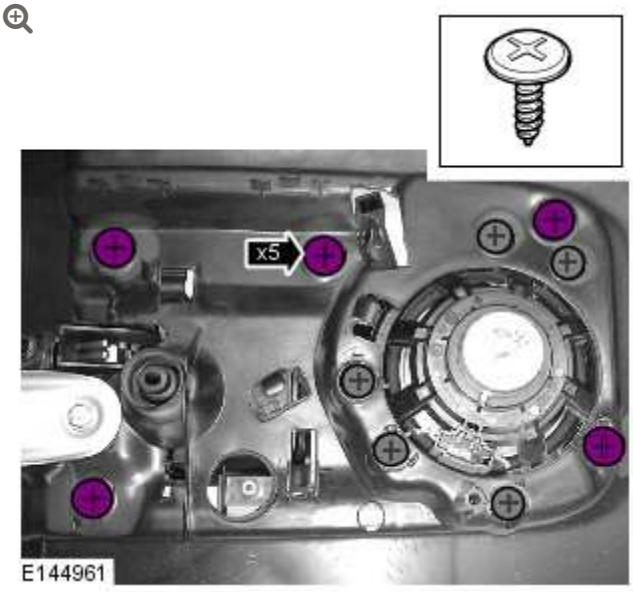

5. Refer to: Front Door Trim Panel (501-05 Interior Trim and Ornamentation, Removal and Installation).

SPEAKERS

INSTRUMENT PANEL SPEAKER (G874151)

REMOVAL AND INSTALLATION

86.50.11	SPEAKER - INSTRUMENT PANEL UPPER SECTION - RENEW	ALL DERIVATIVES	0.1	USED WITHINS	+

REMOVAL

1.

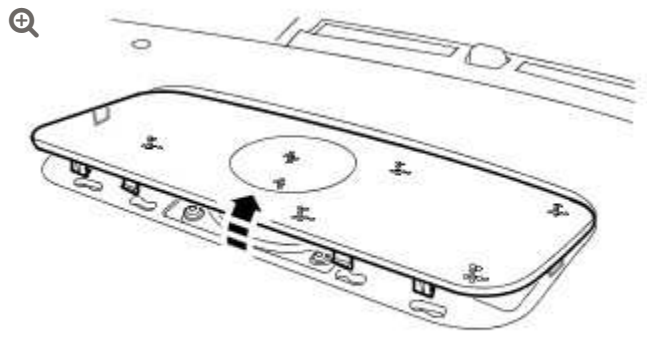

E66320

Remove the instrument panel center speaker grille.

2.

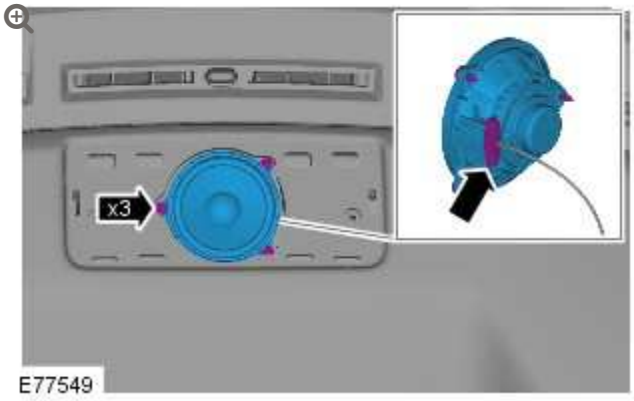

Remove the instrument panel speaker.

- Remove the 3 screws.
- Disconnect the electrical connector.

INSTALLATION

1. Install the instrument panel speaker.
   - Connect the electrical connector.
   - Tighten the 3 screws.
2. Install the instrument panel center speaker grille.

SPEAKERS

QUARTER PANEL SPEAKER (G300896)

REMOVAL AND INSTALLATION

REMOVAL

NOTE:

The procedure to remove the quarter panel speaker is shown in the D-pillar trim panel procedure.

1. Remove the D-pillar trim panel.
   For additional information, refer to: D-Pillar Trim Panel (501-05, Removal and Installation).

INSTALLATION

1. Install the D-pillar trim panel.
   For additional information, refer to: D-Pillar Trim Panel (501-05, Removal and Installation).

SPEAKERS

REAR DOOR SPEAKER (G428408)

REMOVAL AND INSTALLATION

86.50.12	SPEAKER - REAR - RENEW	ALL DERIVATIVES	0.3	USED WITHINS	+

REMOVAL

1. Remove the rear door trim panel.
   For additional information, refer to: Rear Door Trim Panel (501-05, Removal and Installation).

2. 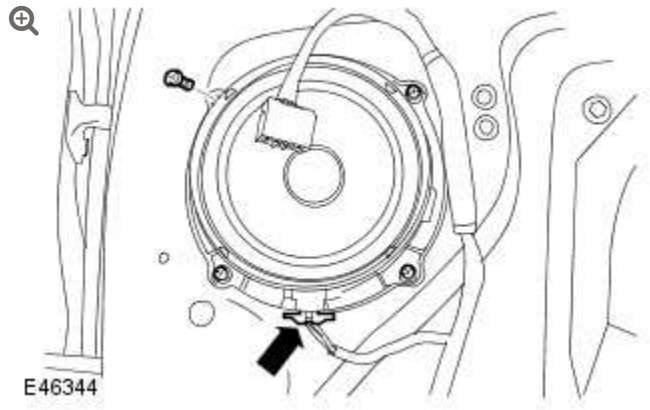

   Remove the speaker.

   - Disconnect the electrical connector.
   - Remove the 4 screws.

INSTALLATION

1. Install the speaker
   - Tighten the screws.
   - Connect the electrical connector.
2. Install the rear door trim panel.
   For additional information, refer to: Rear Door Trim Panel (501-05, Removal and Installation).

2012.0 RANGE ROVER (LM), 415-03

SPEAKERS

DESCRIPTION AND OPERATION

SPEAKER COMPONENT LOCATION – DSP SYSTEM

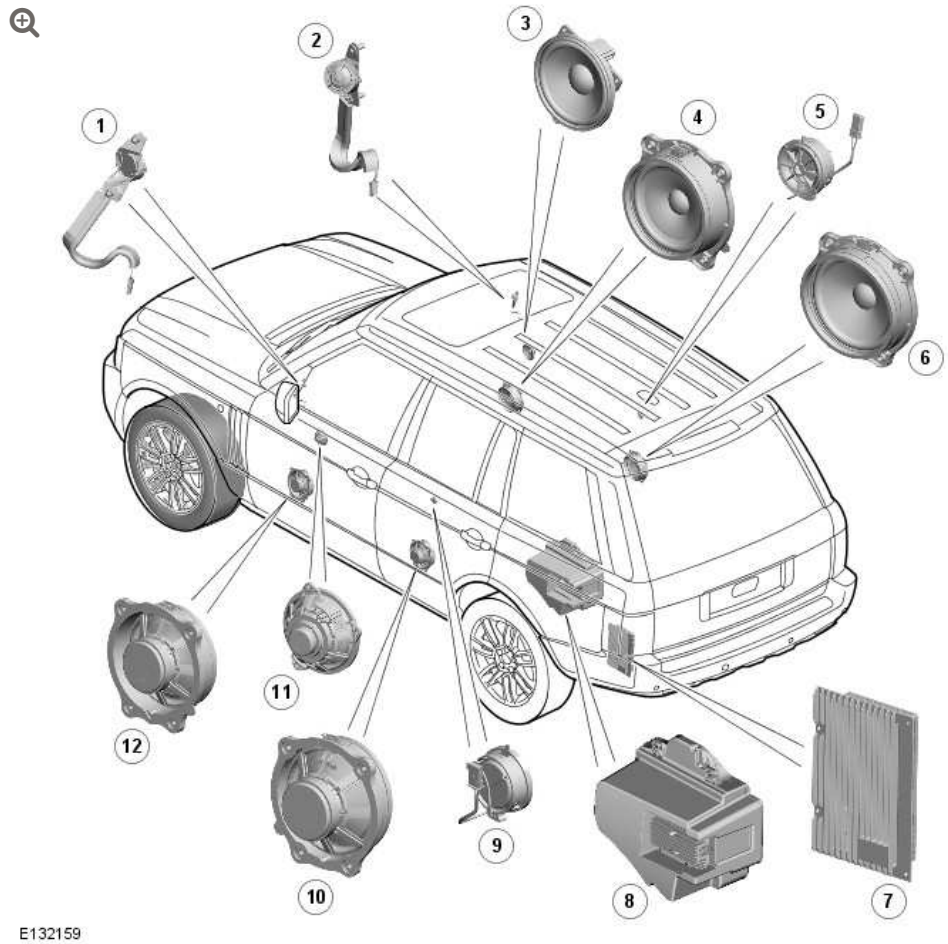

ITEM	DESCRIPTION
1	left-hand (LH) front door tweeter
2	right-hand (RH) front door tweeter

ITEM	DESCRIPTION
3	RH front door mid-range
4	Center fill speaker - Logic7 only
5	RH front door woofer
6	RH rear door mid-high range
7	Audio amplifierRH rear door mid-woofer
8	Subwoofer
9	LH rear door mid-high range
10	LH rear door mid-woofer
11	LH front door mid-range
12	LH front door woofer

SPEAKER COMPONENT LOCATION – LOGIC7/LOGIC7 HD 1200W PREMIUM SYSTEM

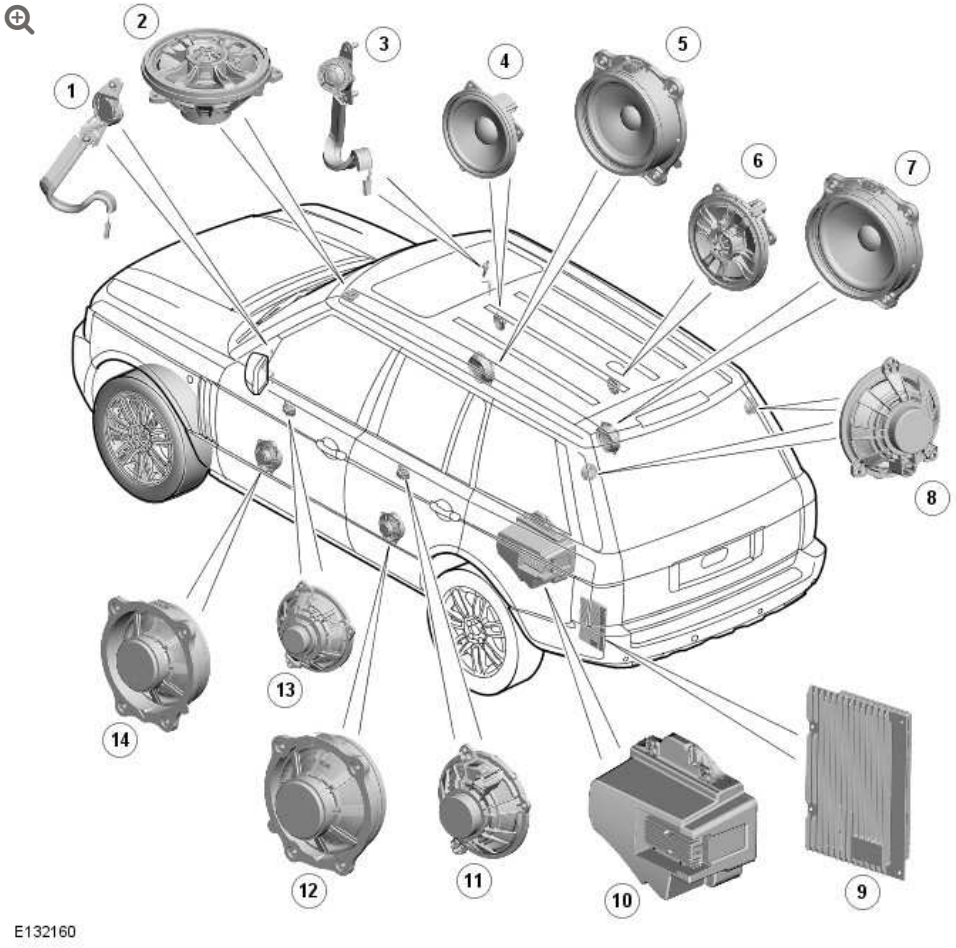

ITEM	DESCRIPTION
1	LH front door tweeter
2	Center fill speaker (co-axial speaker on 1200W Premium system)
3	RH front door tweeter
4	RH front door mid-range
5	RH front door woofer
6	RH rear door mid-high range (co-axial speaker on 1200W Premium system)
7	RH rear door mid-woofer
8	E pillar surround (2 off) (co-axial speaker on 1200W Premium system)

ITEM	DESCRIPTION
9	Audio amplifier
10	Subwoofer
11	LH rear door mid-high range (co-axial speaker on 1200W Premium system)
12	LH rear door mid-woofer
13	LH front door mid-range
14	LH front door woofer

The speaker configuration depends on the level of audio unit fitted to the vehicle. Three systems are available; DSP, Logic7 and Logic7 HD Premium. The following details the speaker configuration and control for each system.

DSP SYSTEM AMPLIFIER

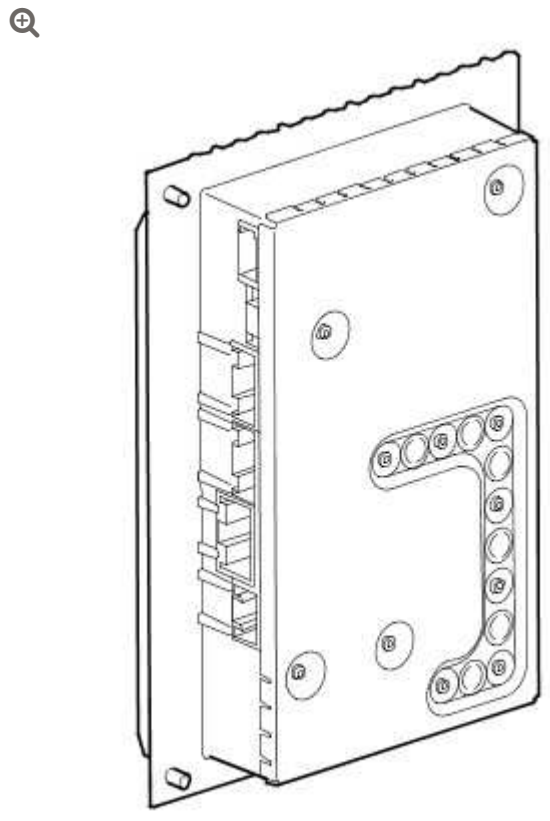

M866139

The Digital Sound Processor (DSP) amplifier is located in the rear LH side of the luggage compartment. The DSP amplifier drives 11 speakers; two front door mid-range, four front and rear door bass, four front and rear door tweeters on eight channels and a passive subwoofer. The amplifier produces 320 Watts of digital amplification to power the speakers.

HARMAN KARDON LOGIC7/LOGIC7 HD 1200W PREMIUM SYSTEM AMPLIFIER

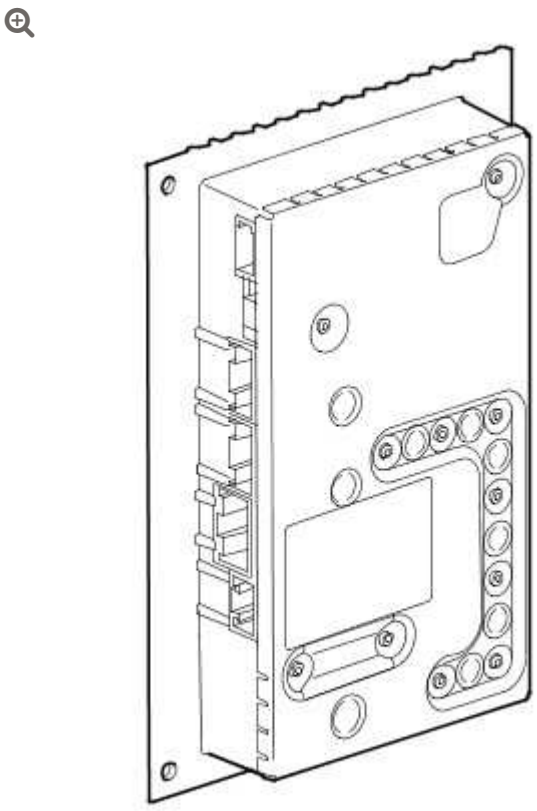

M866140

The Logic7 and Logic7 HD 1200W Premium system amplifiers are located in the rear LH side of the luggage compartment.

LOGIC7 SYSTEM

The Logic7 amplifier drives 14 speakers on 5.1 surround channels; two front door mid-range, four front and rear door bass woofers, two front and rear door tweeters on eight channels and a passive subwoofer as on the DSP system, but with two additional surround

sound speakers located in the upper tail door and a center surround speaker located in the fascia.

The Logic 7 system amplifier produces 720W of digital amplification to power the sepakers.

LOGIC7 HD 1200W PREMIUM SYSTEM

The Logic7 HD 1200W Premium system amplifier drives 19 speakers on 5.1 surround channels; two front door mid-range, two front door bass woofers, two front mid range, two front tweeters, two rear door bass woofers, two rear door co-axial mid-high range, a passive subwoofer as on the DSP system, with a co-axial surround sound speaker located in each E pillar and a center co-axial surround speaker located in the instrument panel.

The Logic7 HD 1200W Premium system amplifier produces 1200 Watts of digital amplification to power the speakers.

CONTROL DIAGRAM – DSP SPEAKER SYSTEM

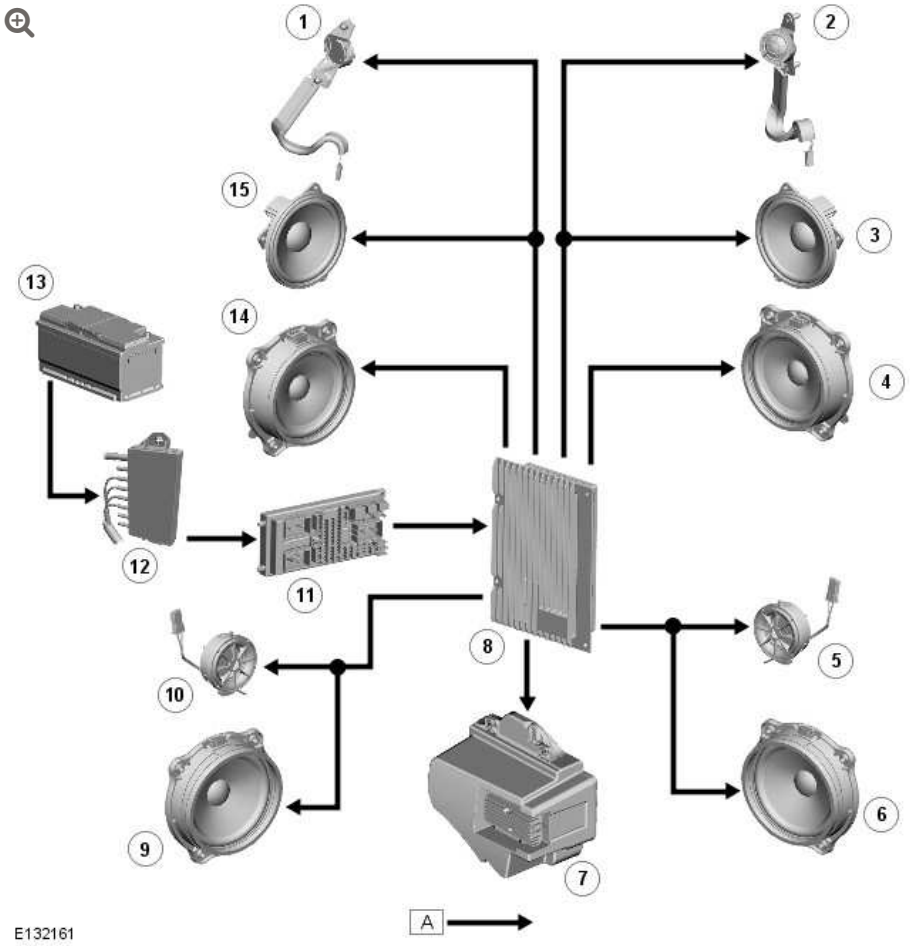

ITEM	DESCRIPTION
1	LH front door tweeter
2	RH front door tweeter
3	RH front door mid-range speaker
4	RH front door woofer
5	RH rear door high range speaker
6	RH rear door mid-woofer
7	Subwoofer
8	DSP amplifier
9	LH

ITEM	DESCRIPTION
10	LH rear door high range
11	Rear Junction box (RJB)
12	Battery Junction Box (BJB)
13	Battery
14	LH front door woofer
15	LH front door mid-range

CONTROL DIAGRAM - LOGIC7/LOGIC7 HD 1200W PREMIUM SPEAKER SYSTEM

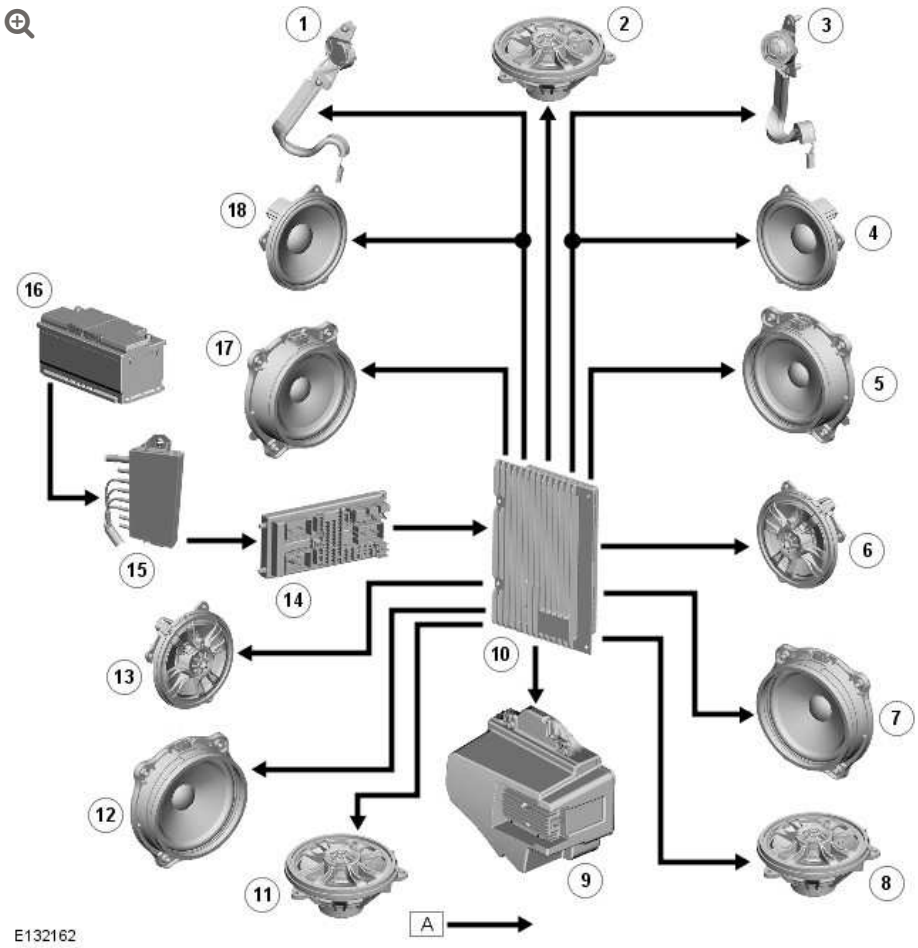

ITEM	DESCRIPTION
1	LH front door tweeter

ITEM	DESCRIPTION
2	Center fill speaker (co-axial speaker on 1200W Premium system)
3	RH front door tweeter
4	RH front door mid-range speaker
5	RH front door woofer
6	RH rear door mid-high range speaker (co-axial on 1200W Premium system)
7	RH rear door mid-woofer
8	RHE pillar surround (co-axial on 1200W Premium system)
9	Subwoofer
10	Logic7 amplifier
11	LHE pillar surround (co-axial on 1200W Premium system)
12	LH mid-woofer
13	LH rear door mid-high range (co-axial on 1200W Premium system)
14	Rear Junction box (RJB)
15	Battery Junction Box (BJB)
16	Battery
17	LH front door woofer
18	LH front door mid-range

SPEAKERS

TAILGATE SPEAKER (G371272)

REMOVAL AND INSTALLATION

REMOVAL

1. Remove the tailgate trim panel.
   For additional information, refer to: Tailgate Trim Panel (501-05 Interior Trim and Ornamentation, Removal and Installation).

2.

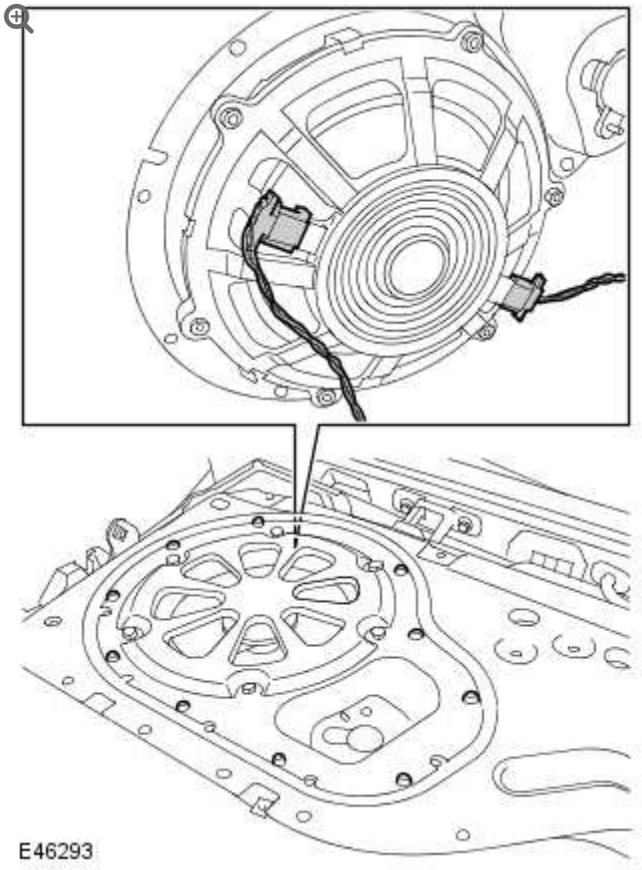

Remove the tailgate speaker assembly.

- Remove the 10 Torx bolts.
- Disconnect the 2 electrical connectors.

---

3. **NOTE:**

Do not disassemble further if the component is removed for access only.



Remove the tailgate speaker.

- Remove the 6 bolts.

INSTALLATION

1. Install the tailgate speaker.
   - Tighten the bolts to 10 Nm (7 lb.ft).
2. Install the tailgate speaker assembly.
   - Connect the electrical connectors.
   - Tighten the Torx bolts to 10 Nm (7 lb.ft).
3. Install the tailgate trim panel.
   For additional information, refer to: Tailgate Trim Panel (501-05 Interior Trim and Ornamentation, Removal and Installation).

VIDEO SYSTEM

DIGITAL VERSATILE DISC (DVD) PLAYER (G1240251)

REMOVAL AND INSTALLATION

REMOVAL

NOTE:

Removal steps in this procedure may contain installation details.

1. Disconnect the battery ground cable.
   Refer to: Specifications (414-00, Specifications).

2. 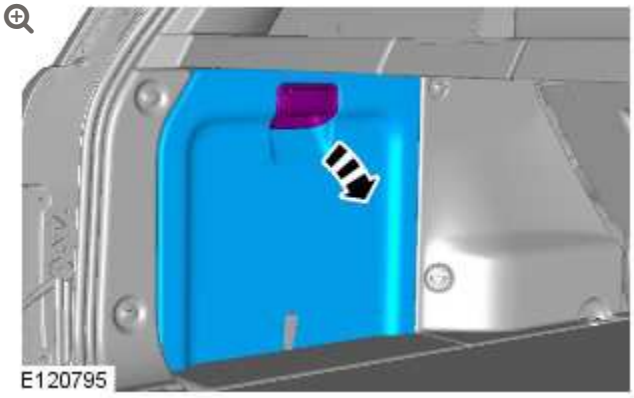

3.

CAUTIONS:

- Take extra care not to damage the wiring harnesses.
- Make sure that the fiber optic cables are not bent to a radius of less than 25 mm.

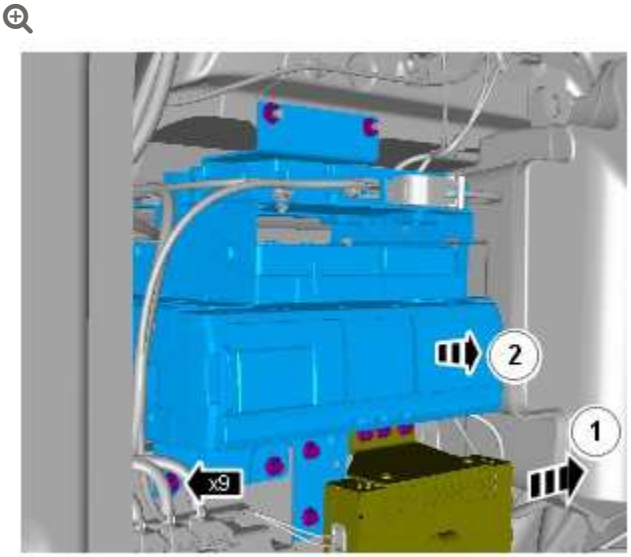

E120846

Torque: **10 Nm**

4.

CAUTION:

Make sure that the fiber optic cables are not bent to a radius of less than 25 mm.

NOTE:

Component illustrated, removed for clarity.

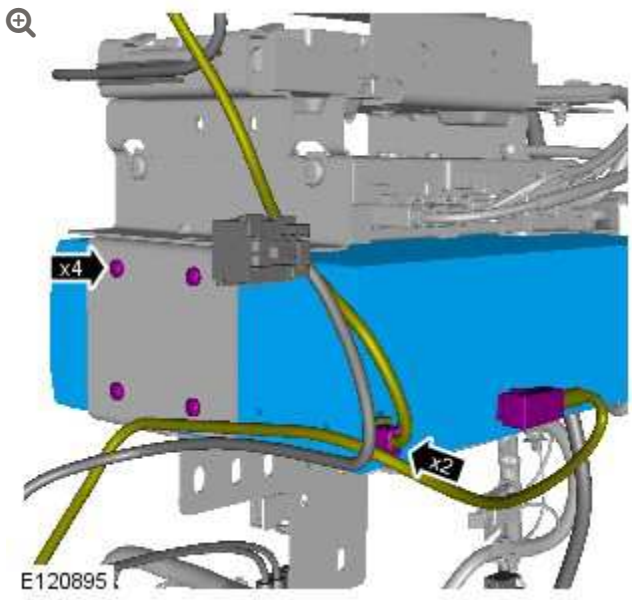

Torque: **1 Nm**

5.

CAUTION:

Make sure that the fiber optic cables are not bent to a radius of less than 25 mm.

NOTE:

Component illustrated, removed for clarity.

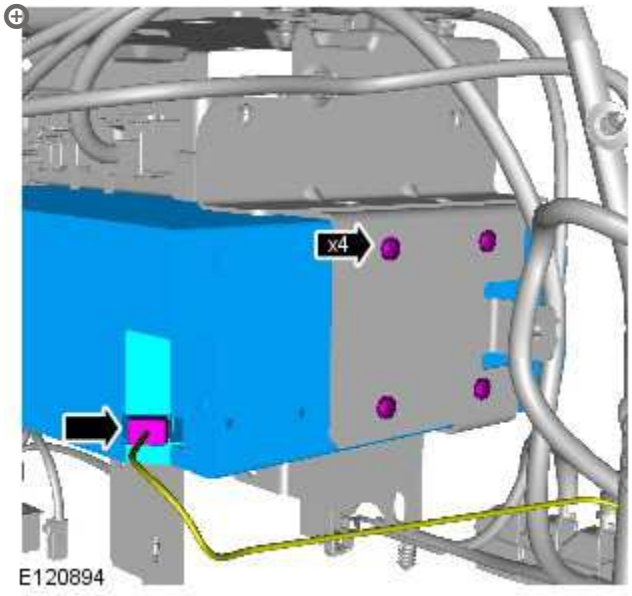

Torque: **1 Nm**

6. **NOTE:**

New units must be configured using the Programmable Module Installation Routine in the diagnostic tool.

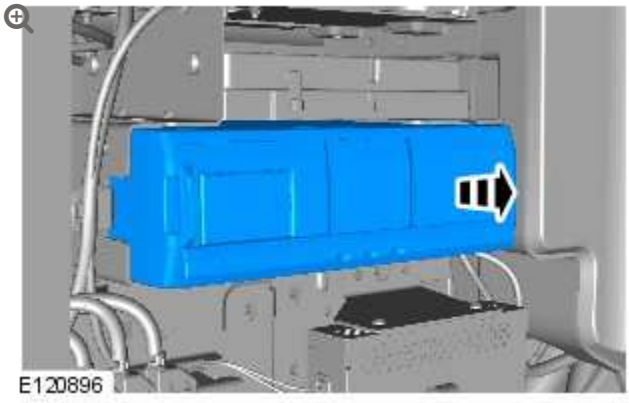

INSTALLATION

1. To install, reverse the removal procedure.

VIDEO SYSTEM

PORTABLE CAMERA (G1240115)

REMOVAL AND INSTALLATION

REMOVAL

1. 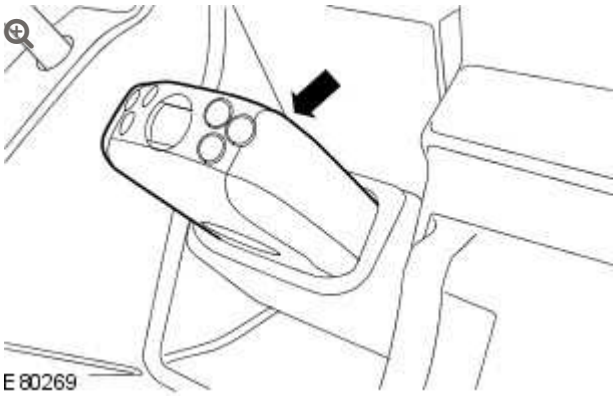

   Release and remove the portable camera from the portable camera docking station.

INSTALLATION

1. Install the portable camera to the portable camera docking station.

2.

NOTES:

- Only carry out the following step if a new portable camera is to be installed.
- A new portable camera may take up to 5 minutes to respond with the ignition switched on.

Configure the portable camera using the integrated control panel (ICP).

VIDEO SYSTEM

PORTABLE CAMERA DOCKING STATION (G1240116)

REMOVAL AND INSTALLATION

REMOVAL

WARNINGS:

- Persons working on the supplemental restraint system (SRS) must be fully trained and have been issued with the safety guidelines.
- Allow a period of 10 minutes to elapse after disconnecting the battery before undertaking any work on the SRS.
- The SRS electrical connectors are unique. DO NOT force, or attempt to connect electrical connectors to the wrong sockets.
- The correct procedures must always be used when working on SRS components.
- It is imperative that before any work is undertaken on the SRS system, the appropriate information is read thoroughly.
- Always disconnect both battery cables before beginning work on the SRS system. Disconnect the ground cable first. Never reverse connect the battery.
- Take extra care when handling SRS components.

1. Make the air bag supplemental restraint system (SRS) safe.
   For additional information, refer to: Standard Workshop Practices (100-00, Description and Operation).

2. Disconnect the battery ground cable.
   For additional information, refer to: Specifications (414-00, Specifications).

3. Remove the upper glove compartment.
   For additional information, refer to: Upper Glove Compartment (501-12, Removal and Installation).

4. 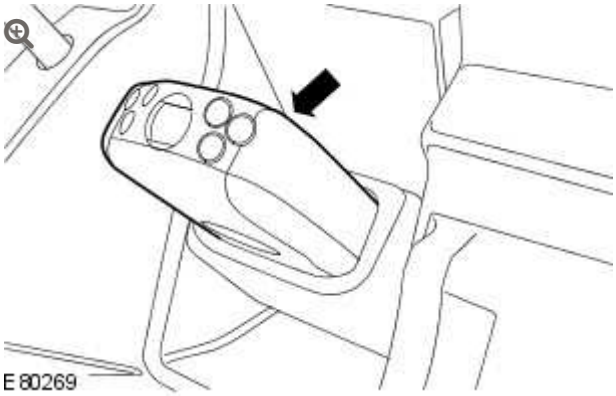

Release and remove the portable camera from the portable camera docking station.

5. 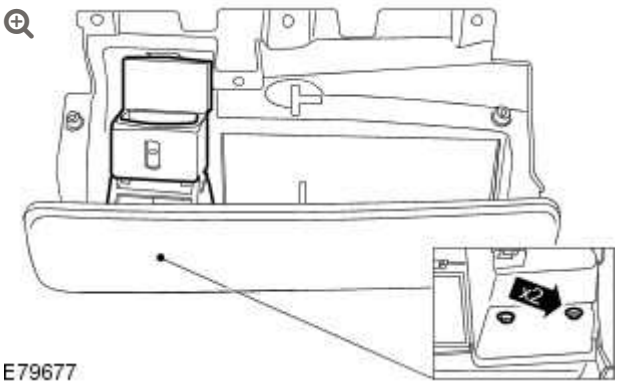

Remove the portable camera docking station.

- Remove the 2 screws.

INSTALLATION

1. Install the portable camera docking station.
   - Install the screws and tighten to 2 Nm (2 lb.ft).
2. Install the portable camera to the portable camera docking station.
3.

Install the upper glove compartment.
For additional information, refer to: Upper Glove Compartment (501-12, Removal and Installation).

4. Connect the battery ground cable.
For additional information, refer to: Specifications (414-00, Specifications).

VIDEO SYSTEM

REAR PASSENGER ENTERTAINMENT CONTROL PANEL (G1240220)

REMOVAL AND INSTALLATION

REMOVAL

1. Remove the register.
   For additional information, refer to: Register (412-03, Removal and Installation).

2.

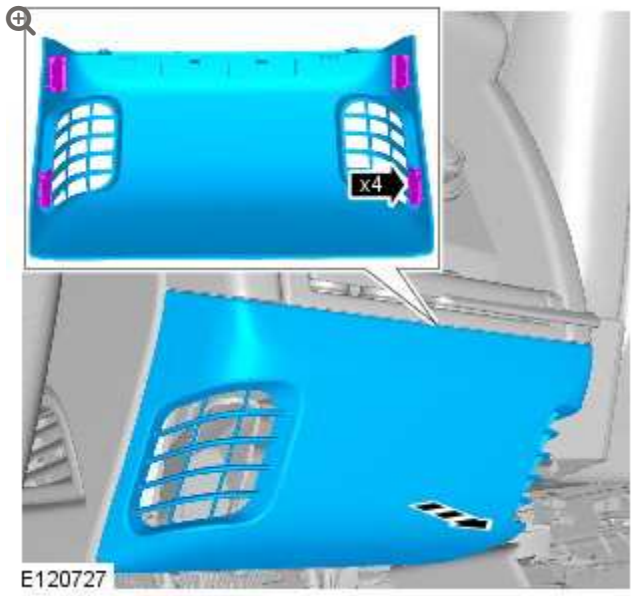

Remove the rear floor register.

- Release the 4 clips.

3.

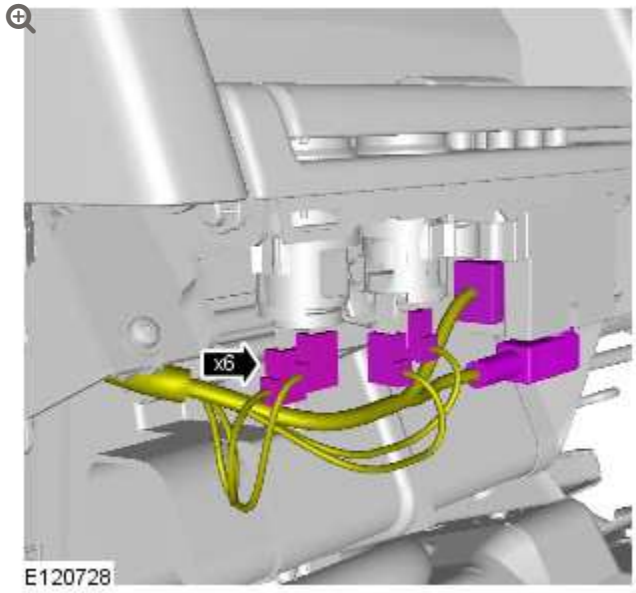

Disconnect the 6 electrical connectors.

4.

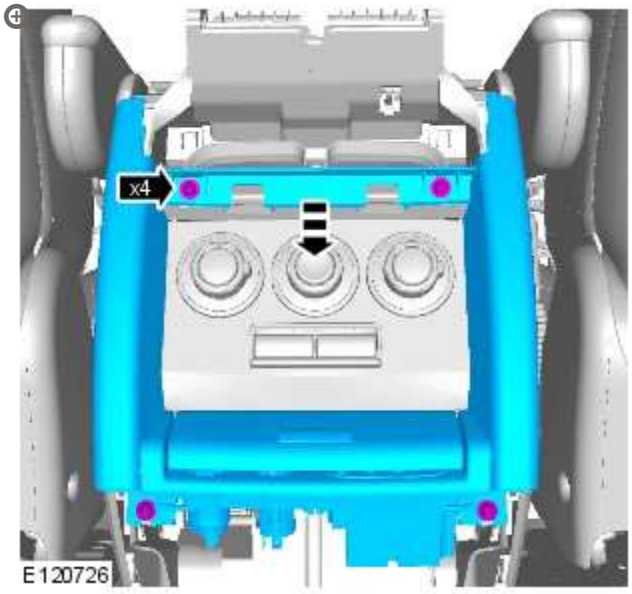

Remove the floor console rear trim panel.

- Remove the 4 screws.

5.

NOTE:

Do not disassemble further if the component is removed for access only.

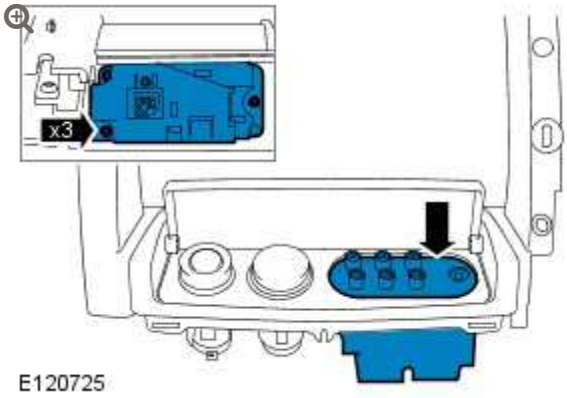

Remove the rear passenger entertainment control panel.

- Remove the 3 screws.

INSTALLATION

1. Install the rear passenger entertainment control panel.
   - Install the screws and tighten to 1 Nm (1lb.ft).
2. Install the floor console rear trim panel.
   - Install the screws and tighten to 2 Nm (2 lb.ft).
3. Connect the 6 electrical connectors.
4. Install the rear floor register.
   - Secure the 4 clips.
5. Install the register.
   For additional information, refer to: Register (412-03, Removal and Installation).

VIDEO SYSTEM

DIAGNOSIS AND TESTING

PRINCIPLE OF OPERATION

For a detailed description of the video system and operation, refer to the relevant Diagnosis and Testing section of the workshop manual. REFER to: Video System (415-07 Video System, Description and Operation).

INSPECTION AND VERIFICATION

CAUTION:

Diagnosis by substitution from a donor vehicle is **NOT** acceptable. Substitution of control modules does not guarantee confirmation of a fault and may also cause additional faults in the vehicle being checked and/or the donor vehicle.

NOTE:

Check and rectify basic faults before beginning diagnostic routines involving pinpoint tests.

1. Verify the customer concern.

2. Visually inspect for obvious signs of mechanical or electrical damage.

Visual Inspection

MECHANICAL	ELECTRICAL
▪ Front touch screen display (TSD) installation and condition ▪ Rear seat entertainment (RSE) screen installation and condition ▪ Digital versatile disc (DVD) multi-changer installation and condition ▪ Television antennae (two in each rear side window)	▪ Fuses ▪ Electrical harnesses ▪ Fibre optic cable harnesses ▪ Infotainment relay ▪ Display screens ▪ DVD multi-changer ▪ Television tuner module ▪ RSE module ▪ Television antenna amplifiers (4) ▪ Remote control and batteries

3. If an obvious cause for an observed or reported concern is found, correct the cause (if possible) before proceeding to the next step.

4. If the cause is not visually evident, verify the symptom and refer to the Symptom Chart, alternatively check for Diagnostic Trouble Codes (DTCs) and refer to the relevant DTC Index.

SYMPTOM CHART

SYMPTOM	POSSIBLE CAUSES	ACTION

SYMPTOM	POSSIBLE CAUSES	ACTION
The DVD does not operate	▪ DVD multi-changer fuse blown ▪ No power to display screens ▪ Condensation	Check the DVD circuits for a short circuit causing fuse failure and rectify as necessary. Refer to the electrical guides. Check for power to the display screens, rectify as necessary. Refer to the electrical guides. Wait at least one hour for the condensation to dry out.
Remote control operation is unstable	▪ Handset batteries low on power ▪ Remote control receiver sensor or transmitter is dirty	Check and renew the batteries as necessary. Check and clean the receiver and transmitter as necessary.
There is no picture	▪ The display screen is set to an incorrect mode	Use the switch on the back of the handset to select the correct mode.
Playback does not start	▪ Disc is loaded upside-down ▪ An incorrect format of disc is loaded ▪ Parental lock is set ▪ The setup menu is displayed	Check that the disc is correctly loaded. Check that the disc format is compatible. Cancel parental lock or check the rating of the disc. Press **SET** for at least 2 seconds to turn the setup menu off.
The picture is unclear or noisy	▪ The disc is being fast forwarded or rewound ▪ The vehicle battery power is low	The picture may be slightly distorted in fast forward or rewind modes. Check the vehicle battery condition and state of charge.
The image "freezes"	▪ The disc is scratched	Load an undamaged disc.
NO MAG is displayed	▪ There is no magazine loaded into the DVD multi-changer	Load a magazine.

SYMPTOM	POSSIBLE CAUSES	ACTION
NO DISC is displayed	▪ There is no disc loaded into the magazine ▪ The disc is dirty	Load a disc into the magazine. Clean the disc as necessary.
REGIONAL CODE VIOLATION is displayed	▪ The disc loaded does not match the regional code number	Load a disc which matches the regional code number.
VIDEO SIGNAL IS NOT CORRECT is displayed	▪ An NTSC disc is loaded into a PAL system, or vice versa	Load a disc of the correct format.
HI TEMP is displayed	▪ The system protective circuit is activated as it has detected a high temperature	Turn the power **OFF** on the unit and then back on again. If the display does not clear, leave the power off until the temperature decreases and turn the power **ON** again.

DTC INDEX

For a list of Diagnostic Trouble Codes (DTCs) that could be logged on this vehicle, please refer to Section 100-00.

2012.0 RANGE ROVER (LM), 415-07

VIDEO SYSTEM

DESCRIPTION AND OPERATION

ENTERTAINMENT SYSTEM – COMPONENT LOCATION

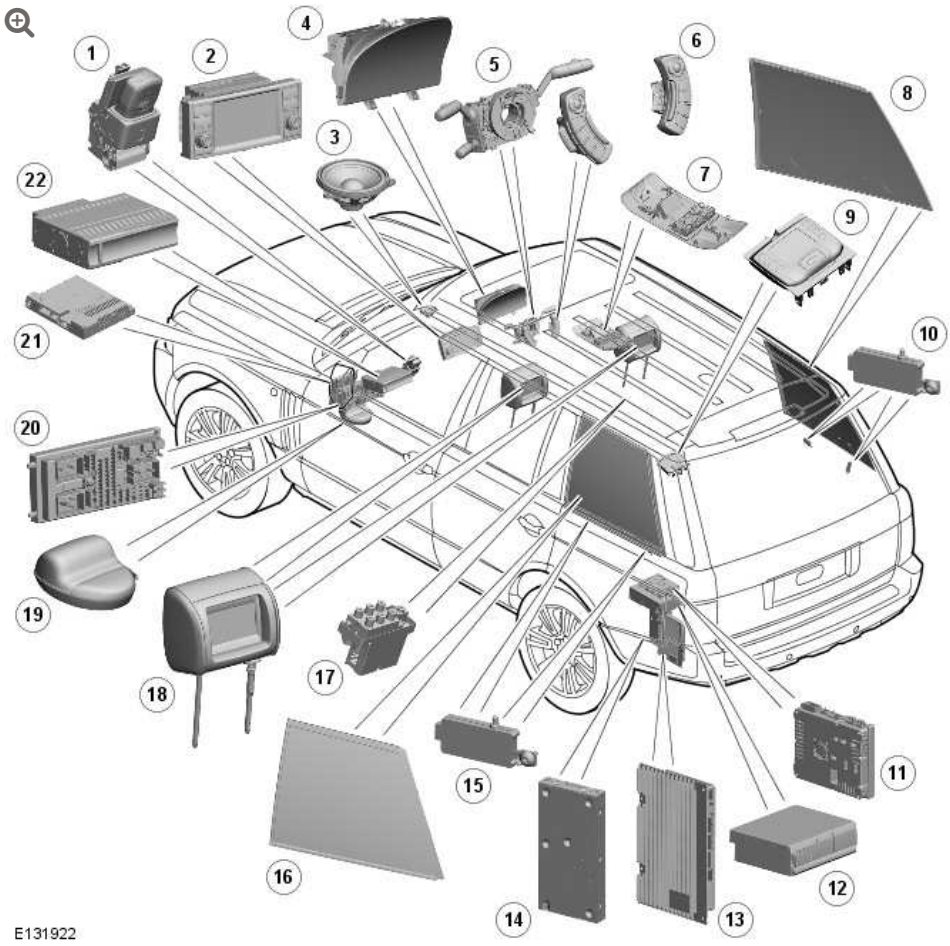

ITEM	DESCRIPTION
1	VentureCam™
2	TSD (touch screen display)

ITEM	DESCRIPTION
3	Speakers
4	Instrument cluster
5	Clockspring
6	Steering wheel switches
7	Headphone transmitter module
8	TV RF antenna - right-hand (RH)
9	RSE remote control and docking station
10	TV antenna RF amplifiers
11	TV tuner
12	digital versatile disc (DVD) autochanger
13	Audio amplifier
14	Rear Seat Entertainment (RSE) module
15	TV antenna RF amplifiers
16	TV RF antenna - LH (left-hand)
17	Audio Visual Input Output (AVIO) panel
18	liquid crystal display (LCD) screens
19	Headphones
20	CJB (central junction box)
21	IHU (integrated head unit)
22	CD (compact disc) autochanger

GENERAL

The fibre optic, Media Orientated System Transport (MOST) based system provides video and audio entertainment for the rear seat occupants. The system allows DVD video and TV to be viewed on two RSE LCD screens, listen to audio output via the vehicle speakers or cordless headphones or display video images on the RSE LCD

screens from an external source, such as a video player or games console. The video images can also be displayed on the Touch Screen Display (TSD) if the vehicle is below a predetermined speed threshold or has duel view TSD fitted.

The system comprises the following components:

- RSE Module
- TV Tuner
- Four TV Antennae
- Four TV Antenna amplifiers
- Two RSE LCD screens
- DVD autochanger
- RSE remote control
- Headphone transmitter module
- Cordless headphones
- AVIO panel.

The RSE system also uses other components which form part of the audio system as follows:

- TSD
- Steering wheel switches
- compact disc (CD) autochanger
- Audio amplifier
- Vehicle speakers
- IHU

TOUCH SCREEN DISPLAY

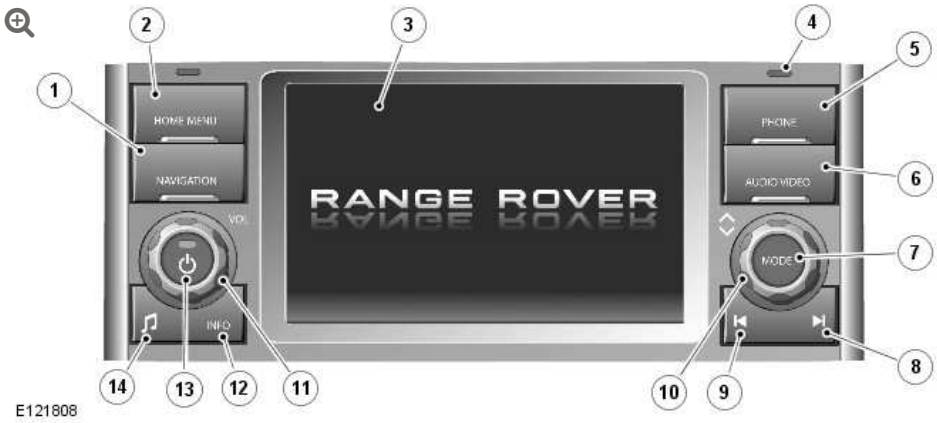

ITEM	DESCRIPTION
1	Navigation
2	Home menu
3	Touch screen display
4	Light sensor
5	Telephone
6	Audio/Video
7	Search up/increase
8	Mode
9	Search down/decrease
10	Scroll up/down
11	Volume
12	Information
13	Audio on/off
14	Tone

The Touch Screen Display (TSD) is located in the center of the instrument panel and is the driver control interface for the infotainment system. The TSD is connected to the MOST ring and

communicates with the other components in the audio/infotainment system.

The TSD communicates with the RSE module via a co-axial cable. The TSD processes its own video for system operation but receives the video image data from the RSE via the co-axial cable.

The TSD also provides driver display and control of the audio system, telephone, the rear view camera, proximity cameras, VentureCam™, the Traffic Message Channel (TMC) and the navigation system.

The RSE and other systems are operated by a combination of the physical buttons located on each side of the screen and the 'virtual' buttons displayed on the touch screen. For clarification, the physical buttons are referred to as 'buttons' and the touch screen virtual buttons are referred to as 'icons'.

The TSD is a seven inch touch sensitive, 1280 X 480 pixels LCD (liquid crystal display) VGA screen. The dual-view TSD allows the front seat passenger to view television and video images when the car is being driven. The dual-view screen allows the driver to see the navigation or other system screens but not the TV or video when the vehicle is moving. The screen can be switched between single and dual view using AUDIO VIDEO switch on the TSD.

NOTE:

Due to legislation, the NAS markets do not receive this dual-view option. A single view display is available in these markets.

The dual-view TSD uses Parallax Barrier Shutter Technology to alternately hide and reveal columns of pixels to the left and right hand views of the screen. The display comes with a specially designed agar coating to help prevent sunlight bleaching.

Care should be taken with the TSD to ensure its correct operation:

- The screen should be cleaned with a lightly, water moistened cloth. Do not use chemical agents or domestic products to clean the screen or any part of the surround.
- Only use your finger to operate the touch screen. Ensure you only use one finger to avoid incorrect entries.
- A short light press of the touch screen is sufficient. Excessive pressure can damage the screen.

REAR SEAT ENTERTAINMENT MODULE

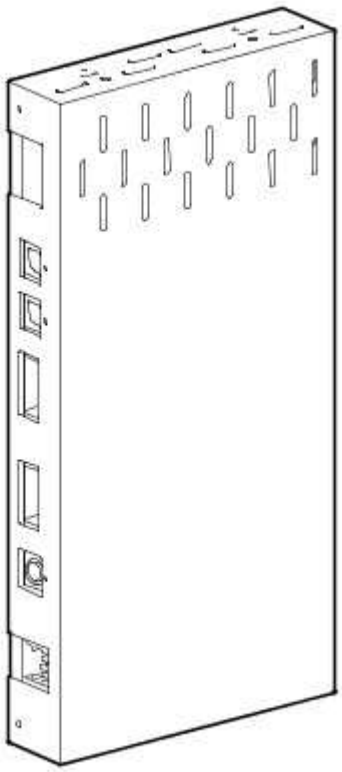

M866142

The Rear Seat Entertainment (RSE) module is located in the left-hand (LH) rear corner of the luggage compartment. The RSE module is an interface between the video and audio inputs from other system components and the video display and audio outputs.

The RSE module communicates with the audio systems via the MOST connection. Audio output from the DVD autochanger and the AVIO panel is processed by the module and passed on the MOST ring to the audio amplifier to allow audio output to be played on the vehicle speakers or on the cordless headphones.

Video input from the TV tuner, DVD autochanger and the Audio Video Input/Output (AVIO) panel is also processed by the module and passed to the two RSE LCD screens and the TSD on separate video connections. The RSE module also controls the power supplies to the RSE LCD screens and relays the infra-red remote control signals received by the RSE LCD screen infra-red sensors to the DVD autochanger. The infra-red signals are passed from the RSE LCD screens to the RSE module on a bus system known as the IS bus.

The DVD autochanger outputs some of its information to the RSE module on an Alpine proprietary bus known as the Ai Net. The Ai Net is a bus system used to communicate between the RSE module and the DVD autochanger.

The RSE module has two modes of operation; engine running mode and reduced operation mode. With the engine running the RSE module has full functionality. When the engine is not running the RSE module has reduced functionality to prevent excessive drain on the vehicle battery. The reduced functionality comprises a reduced audio volume and time limit on system operation.

The reduced audio volume is only active when the engine is not running. The audio volume is limited to a maximum of setting of 12 to reduce battery consumption. If the volume was set at a higher level than this when the engine was running, when the engine is subsequently started, the volume level will gradually increase to the previously selected setting. This prevents the user being distracted by a sudden increase in volume.

The time limit operation is active when the key is removed from the ignition and the system is manually switched on using the TSD. The system will operate for a maximum of one hour. The battery voltage is continually monitored by the IHU. If the IHU detects that the battery voltage has fallen to a predetermined level, the IHU will shut the infotainment system down to prevent further battery drain. Once the system has shut down due to low battery voltage, it can only be restarted when the engine is running and the battery voltage has risen above the threshold level for more than one minute.

The module is connected into the infotainment system with five harness connectors.

DVD AUTOCHANGER

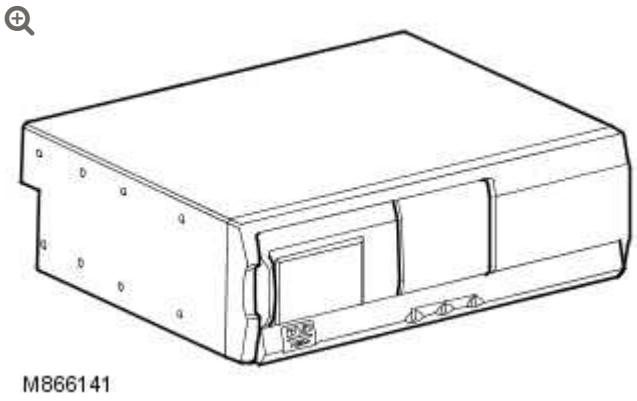

The DVD autochanger is located in the LH rear corner of the luggage compartment. The DVD player is a six disc design which will accept DVD movies, video CD (VCD) and music CD on CD-R or CD-RW. The discs are housed in a magazine to allow six discs to be stored in the unit. Additional magazines can be purchased to allow greater flexibility. The magazine is accessible via a sliding door on the front of the unit. An eject button, located behind the door automatically ejects the magazine from the unit when pressed.

The DVD autochanger is operated using a remote control unit supplied with the vehicle. The remote control is an infra-red unit

which transmits the infra-red signal to receivers located in each RSE LCD screen.

The DVD autochanger receives the remote control information from the RSE LCD screens on a bus system known as the IS bus to the RSE module. The information is then passed from the RSE module on an Alpine proprietary bus known as the Ai Net to the DVD autochanger. The Ai Net is a bus system used to communicate between the RSE module and the DVD autochanger.

A Sony Philips Digital Interface Format (SPDIF) is used to output the audio from the DVD autochanger to the audio amplifier. The SPDIF is an optical system connected between the DVD autochanger and the audio amplifier. SPDIF is a standard audio file transfer format which allows the transfer of digital audio signals from one device to another without having to be converted first to an analog format which maintains the viability of the digital audio signal.

REAR SEAT ENTERTAINMENT (RSE) REMOTE CONTROL



The RSE remote control allows independent multimedia control for left and right rear seat passengers.

The remote control is a dockable unit with a small TSD and a number of buttons to control the audio/video functions. The remote control

is stored in the rear center armrest and can used in the docked position or hand held. When the unit is docked charging is provided to the 3.7 volt 1200mAh Li-ion battery. When fully charged the remote control can have up to 3 hours 20 minutes of continuous use. The remote control is charged when in the armrest docking station. From empty to 90% charge takes approximately 2.5 hours.

The charging is powered via an infotainment relay which is located in the CJB directly to the RSE docking station. Part the of the transmission encoding from the remote control includes the battery status which is passed to the RSE module. If the battery charge becomes low a message is displayed advising to dock and recharge the remote control. The remote control has three power modes as follows:

POWER MODE	OPERATING CONDITION
Operation mode	Fully operational
Sleep mode	Screen and backlight illumination off
Shut down mode	Internal sleep mode (will take approximately 3 seconds to reboot)

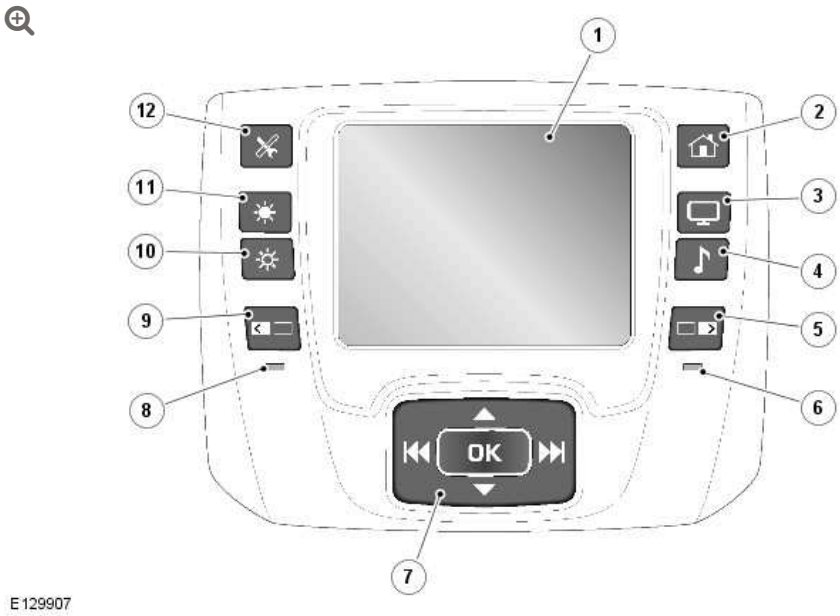

ITEM	DESCRIPTION
1	Touch Screen Display (TSD)
2	Home button
3	Video button
4	Audio button
5	Right Hand (RH) screen select button
6	RH screen selection indicator
7	Five-way switch - Cursor movement and option selection button
8	Left Hand (LH) screen selection indicator
9	LH screen select button
10	Touch screen display brightness decrease button
11	Touch screen display brightness increase button
12	Touch screen display settings button

The remote control controls for example radio, CD/DVD, plug-in audio devices and TV selection by displaying options on the remote control TSD. The options then activate menus in the RSE headrest mounted screen which can navigated using a five-way switch on the remote control. For example, the user can select and press a soft key on the remote control TSD to activate a list of available radio stations in the RSE screen and then use the five-way switch to browse the list and select a radio station.

Part of the Pre-Delivery Inspection (PDI) procedure includes an initial set-up of the remote control (for example language selection). This can be performed with the remote control docked in the armrest. The remote handset battery can then be inserted by the dealer prior to delivery. Located behind the battery cover is a reset button which restores the default settings.

The remote control transmits an infra-red digital signal in response to operation of a button or soft key. The infra-red signal is received by a

receiver sensor located on each RSE LCD screen and is passed, via an IS bus to the RSE module and from the RSE module on an Alpine proprietary bus known as the Ai Net, to the DVD autochanger. The remote control also allows selection of an auxiliary input from the AVIO panel (video or games console) or selection of audio (radio or CD).

When docked, communication from the remote handset takes place via two data lines into the RSE module. This link also enables software updates and configurations sent from the RSE module, for example, a language change requested by the user. This link from the RSE module to the docking station is a basic two-wire interface designed for remote control data rates (approx 38Kbit/sec.). It is protected against short to battery or ground on the output pin.

The remote control is powered by a rechargeable battery located in the rear of the control and is accessible by removing a sliding cover. When inserting the battery it is important that the battery polarity is observed as marked in the battery compartment.

WHITEFIRE® DIGITAL WIRELESS HEADPHONES AND TRANSMITTER



ITEM	DESCRIPTION
1	Whitefire® digital wireless headphones
2	Whitefire® digital infrared transmitter

The RSE headphone transmitter is located in a central position in the rear roof console. The transmitter comprises a printed circuit board and sixteen infra-red light emitting diode (LED) transmitters positioned radially facing the rear of the vehicle.

The headphone transmitter is connected to the audio amplifier. Audio output is passed from the amplifier on a harness to the transmitter. The audio signals are then converted by the transmitter into infra-red signals which are passed via the sixteen transmitters and received by the headphones infra-red sensors.

The transmitter is connected to the infotainment system using an 8 pin harness connector.

The system can support up to two pairs of cordless headphones. The headphones have an adjustable headband which operates on a ratchet mechanism.

The LH side of the headphone houses the infra-red receiver sensors which collect the transmitted signals from the RSE headphone transmitter, two AAA batteries located below a sliding cover and the power on/off switch. When inserting the batteries it is important that the battery polarity is observed as marked in the battery compartment.

The RH side of the headphone houses the volume control, a channel switch and a power 'ON' LED. The volume control is a rotary control to allow the user to adjust the volume output of the headphones. The channel switch allows the source frequency to be changed preventing interference with other infra-red systems. The power 'ON' LED is illuminated when the on/off switch on the LH headphone is pressed. This will remain on and the headphones powered until the switch is pressed for a second time. If the headphones have not received an infra-red signal from the transmitter for several minutes, they will automatically switch off to prevent battery drain.

LCD SCREENS

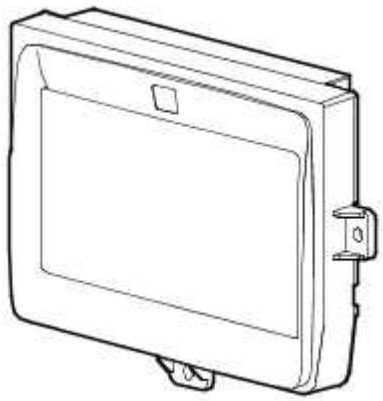

The RSE LCD screens are located in the rear of the front seat head restraints. The screen is secured in the head restraint with three screws which are covered by a removable surround. The screen is a 6.5 inch, auto dimming, high resolution LCD monitor, manufactured by Alpine

An infra-red receiver sensor is located centrally in the upper screen surround. The receiver sensor receives infra-red transmissions from the DVD remote control and passes them to the DVD autochanger, via the RSE module on a bus system known as the IS bus. All screen settings can be changed using the RSE remote control.

The screen should be cleaned with a lightly, water moistened cloth. Do not use chemical agents or domestic products to clean the screen or any part of the surround.

Each RSE LCD screen is connected to the infotainment system using a 20 pin harness connector.

TV TUNER

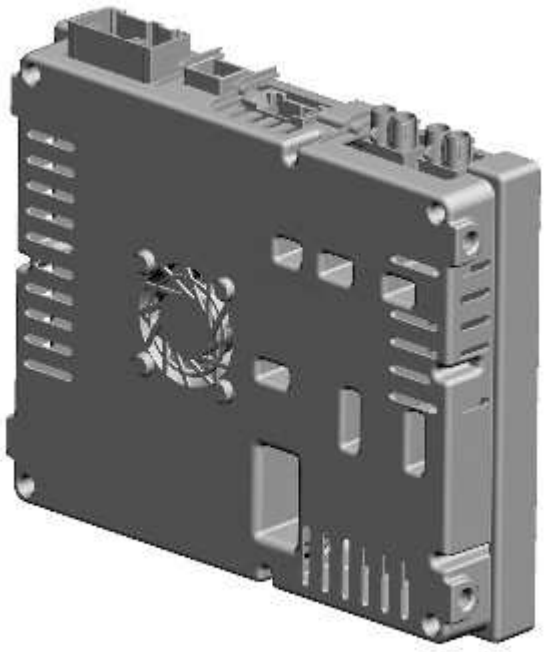

E128344

The TV tuner is located in the left hand rear corner of the luggage compartment. The TV tuner allows the rear seat occupants to view television transmissions on the RSE LCD screens. The front seat occupants can also view the TV transmissions on the TSD but only if duel view TSD is installed or the vehicle is stationary. The TV tuner is capable of receiving local terrestrial TV transmissions in most locations.

The TV tuner is connected on the MOST ring which it uses to output its audio signals to the amplifier. Video output from the tuner is on a screened co-axial cable to the RSE module. Four further connections provide for the signal input from four TV antenna amplifiers and four antennae.

The TV tuner contains three internal tuners. Two of the tuners are connected to the antennae. These tuners receive the audio and visual signals. The tuner with the strongest signal is automatically used to display the required TV channel.

The third internal tuner is connected to only one of the antennae and is used to scan the locality for receivable channels. The tuner can detect different frequencies transmitting the same channel and can select the strongest signal for use.

To cope with changes in technology, the TV tuner is able to receive both analogue and digital TV signals. In certain areas both analogue and digital signal strengths will vary. When in an area of weak reception, you may experience a break-up in picture and sound quality, or a blank screen and audio muting. It may be of benefit to retune the viewed station, and possibly switch between analogue and digital TV stations.

The TV tuner is connected to the infotainment system using four harness connectors.

TV ANTENNAE

NOTE:

On vehicles with remote park heating, the RH rear antenna is fitted with a combined remote park heating/TV antenna amplifier.

Two TV antennae are located in each rear side quarter window. There are three antennae in each window; the forward antenna is a high frequency antenna and the rearward antenna is a low frequency antenna. A third antenna, located between the two TV antennae is for radio reception.

Each antenna is connected directly to a TV RF antenna amplifier which is located just below the rear quarter panel, behind the trim. The four TV antenna amplifiers boost the received RF signal before it is collected and processed by the TV tuner. The TV antennae can receive RF signals of between 48 and 860 MHz.

AUDIO VISUAL INPUT OUTPUT PANEL

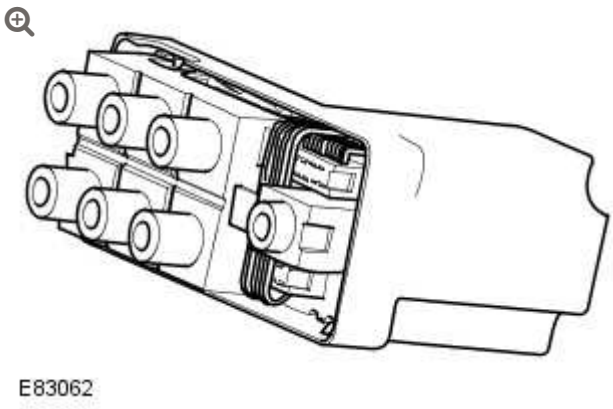

The AVIO panel is located at the rear of the floor console. The panel provides for the connection of auxiliary audio and video inputs from an external source, such as a games console, via seven plugs on the panel. The plugs are covered by a lift up panel.

Two sets of video and audio phono plugs are provided and are designated as AV1 and AV2. The plugs are connected to the RSE module and allow the auxiliary input video to be played on the RSE LCD screens and the audio to be played on the vehicle speakers or on the cordless headphones. The auxiliary input video cannot be displayed on the TSD.

An additional single, 3.5mm jack plug allows for the attachment of an auxiliary audio input, such as a personal stereo or MP3 player. This plug is connected directly to the IHU and allows audio to be played on the vehicle speakers.

The AVIO panel is connected to the infotainment system using two harness connectors.

CONTROL DIAGRAM

NOTE:

A = Hardwired; **N** = Medium Speed CAN Bus; **O** = Lin Bus; **P** = MOST **R** = SPDIF (Sony); **AG** = Infra Red

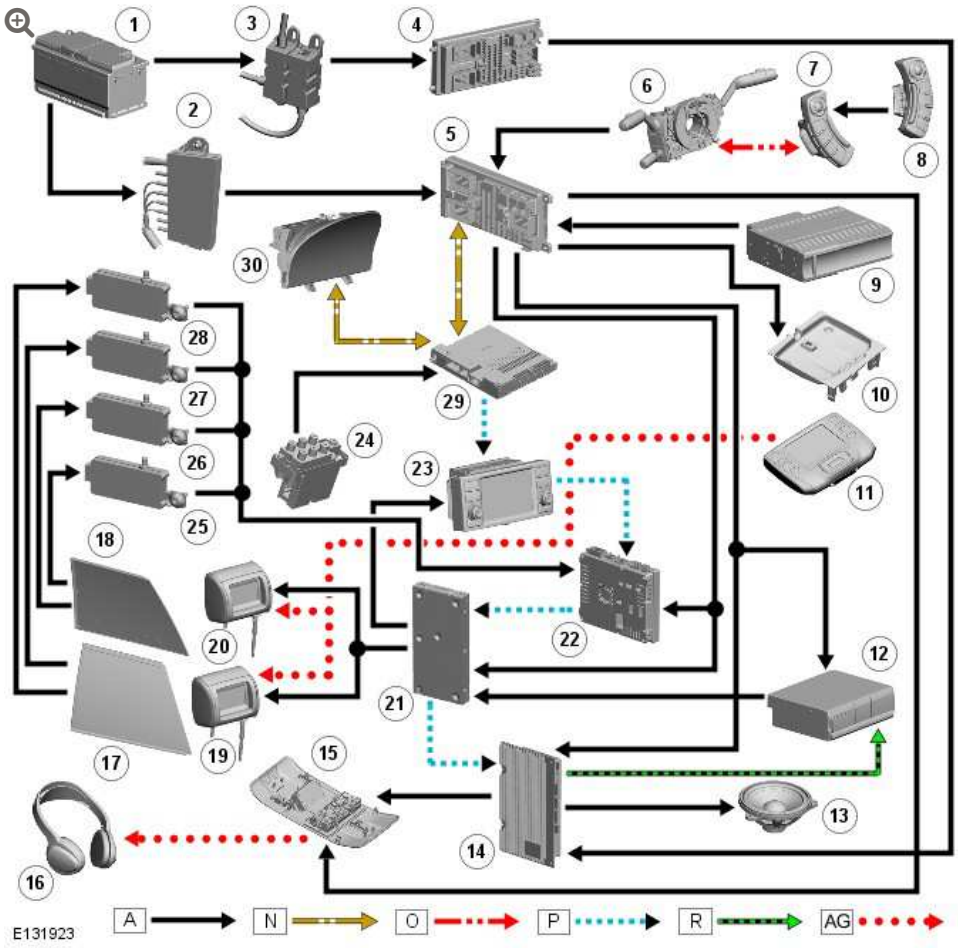

ITEM	DESCRIPTION
1	Battery
2	BJB (battery junction box)
3	BJB2 (battery junction box 2)

ITEM	DESCRIPTION
4	RJB (rear junction box)
5	CJB
6	Clockspring
7	LH steering wheel switch
8	RH (right-hand) steering wheel switch
9	CD autochanger
10	RSE remote control docking station
11	RSE remote control
12	DVD autochanger
13	Speakers
14	Audio amplifier
15	Headphone transmitter module
16	Whitefire® Headphones (cordless)
17	TV RF antenna - LH
18	TV RF antenna - RH
19	LHLCD screen
20	RHLCD screen
21	RSE module
22	TV tuner
23	TSD
24	AVIO panel
25	TV antenna RF amplifier
26	TV antenna RF amplifier
27	TV antenna RF amplifier
28	TV antenna RF amplifier
29	IHU
30	Instrument cluster

ITEM	DESCRIPTION

VENTURECAM™ – COMPONENT LOCATION

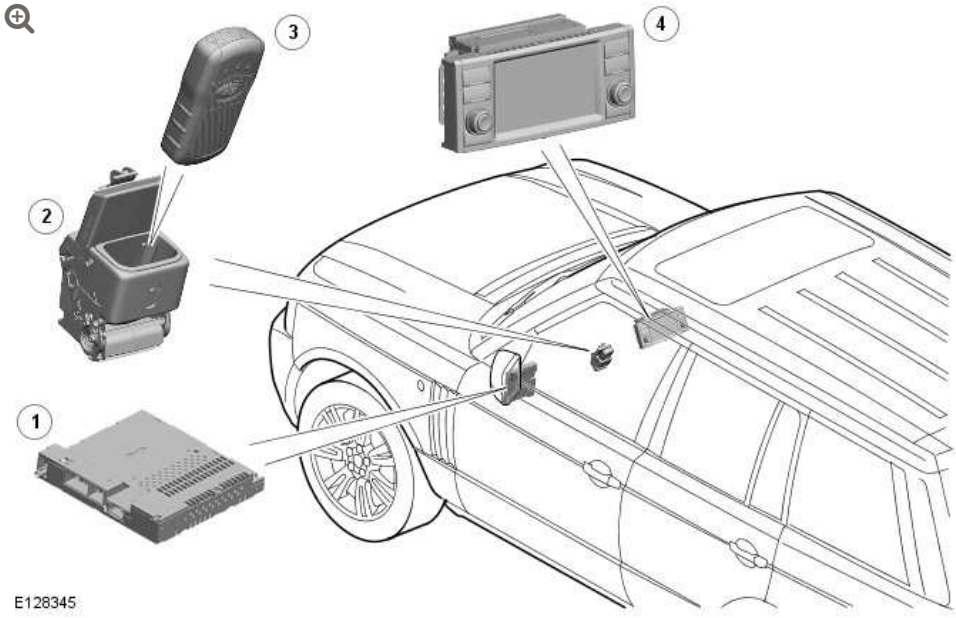

ITEM	DESCRIPTION
1	IHU (integrated head unit)
2	VentureCam™ docking station
3	VentureCam™
4	TSD (touch screen display)

GENERAL

VentureCam™ consists of one or more remote cameras which transmit their images onto the Touch Screen Display (TSD) to provide the driver with a number of benefits, for example manoeuvring the vehicle or connecting a trailer. Additionally, the system can receive video transmissions from other compatible camera units such as a home CCTV camera. The system can support up to sixteen VentureCam's and an additional four external video input units.

The system comprises one or more VentureCam's and a docking station. The system is connected into the infotainment system and the video images are displayed on the TSD.

The VentureCam™ receives signals via a UHF transmission from the docking station for remote operation of the camera. The frequencies can be 433 MHz or 915 MHz depending on the market. The VentureCam™ transmits its video images to the docking station on a 2.4 GHz RF microwave transmission. The video is provided in an NTSC format at 25 frames per second. The microwave transmission is limited to an output of 10 mW to avoid conflicting with broadcasting legislation in most countries.

The VentureCam™ can receive and transmit signals at a distance of between 20 and 30 meters (65 and 98 feet). This range is dependant on the surrounding environment, i.e. the signals may be blocked or limited by buildings, vehicles etc.

The VentureCam™ system is connected to the TSD for video display by a co-axial cable. A controller area network (CAN) connection allows the Integrated Head Unit (IHU) to communicate with the docking station for transmission of infotainment relay energized signals etc.

VentureCam™ can be accessed by selecting 4X4i information on the TSD using a physical button or an icon on the screen. VentureCam™ is then selected by pressing the camera icon on the TSD.

VENTURECAM™

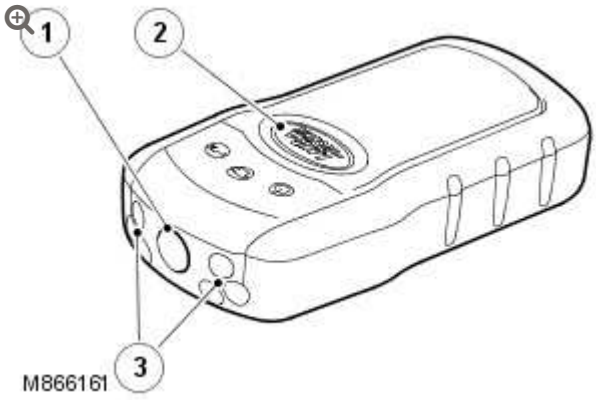

ITEM	DESCRIPTION
1	Camera lens
2	Control switch
3	LED

The VentureCam™ is a compact unit containing hardware and software for control of video image capture and transmission, six red LED for an additional light source and a control button.

The control button allows the VentureCam™ to be switched on or off and to activate the LED. The selections are made sequentially with the button, e.g.; the first press switches the camera function on, the second press switches the camera off and switches the LED on (torch function) and a third press switches the whole unit off. Using this button on the VentureCam™, only the camera or the torch function can be selected, they cannot be selected to work together at the same time. However, when in the camera function mode, the LED can also be made active by pressing the torch icon visible in the TSD. This will allow the LED to enhance the VentureCam™ view in low ambient light levels.

When the camera mode is selected, by pressing the button once, the area around the 'Land Rover' logo button is illuminated in a green

color. If the illumination flashes, this indicates that the camera is awaiting a command from the TSD.

The VentureCam™ has an integral re-chargeable battery which, when fully charged, allows approximately 3 hours continuous use of video transmission. If the unit is used solely as a torch with only the LED illuminated, the battery will provide approximately 4 hours continued use. The VentureCam™ battery has a serviceable life of approximately 8 to 10 years, depending on its usage. The battery cannot be replaced separately, so if the battery fails, the VentureCam™ must be replaced.

The VentureCam™ is an electronic device and therefore should be handled with care. If the unit becomes dirty, clean only with a damp cloth, do not use detergents or solvent based cleaners. Avoid high temperatures, do not store the VentureCam™ in direct sunlight, always store in the docking station, glovebox or door pocket.

VENTURECAM™ MOUNT

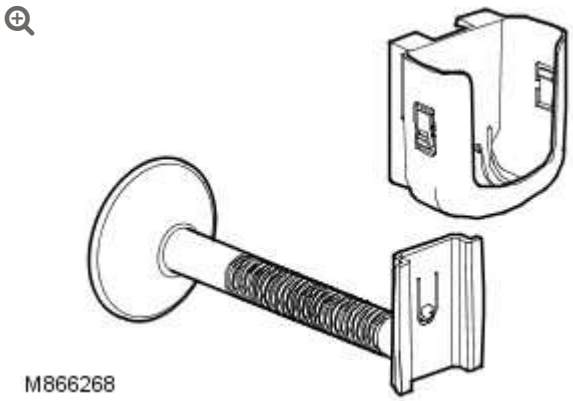

An accessory mount is available with a suction cup which allows the VentureCam™ to be located inside or outside the vehicle. The holder has a removable holster into which the VentureCam™ is secured. The holster has a standard camera thread which allows it to be mounted on a tripod for instance. The suction cup has a control lever which creates a vacuum to provide the suction to secure the

mount. To release the suction cup, lower the lever to release the vacuum.

BATTERY CHARGING

The battery is re-charged when the unit is in the docking station. Two spring loaded pins in the docking station connect with contacts on the VentureCam™. The charging will occur only when the VentureCam™ is in the docking station and the ignition switch is in position II. Power is supplied direct from the vehicle battery via a fuse in the central junction box (CJB) and is permanently live. However, charging will only occur when the IHU receives an ignition on signal via the CAN. The IHU then sends a charge message to the docking station via its CAN connection. The docking station software will allow further charging of the battery for a period of 30 minutes after an ignition off signal is received from the IHU.

The battery condition is shown on the TSD VentureCam™ display. A charge level indicator is displayed to indicate the charge level of the VentureCam™ battery.

One segment on the battery display indicates that the battery is almost fully discharged. The docking station will apply a slow charge to the battery to ensure the battery charge is fully recovered and may stay in this mode for a long period of time, depending on how low the battery charge has become. If a rising row of segments is indicated on the battery display, the docking station is applying a fast charge to the battery and will fully charge the battery in the minimum period of time. A complete and stationary row of segments indicates a fully charged battery.

If the battery is completely discharged, it will take approximately 2 hours of continuous charging with the vehicle engine running to restore the battery to a fully charged condition.

It is recommended that the VentureCam™ is stored in the docking station when not in use. The docking station will ensure that the

battery is kept at the optimum charge level. If the customer has more than one VentureCam™, it is recommended that the units are cycled on a weekly basis to ensure that the battery charge level is maintained.

DOCKING STATION

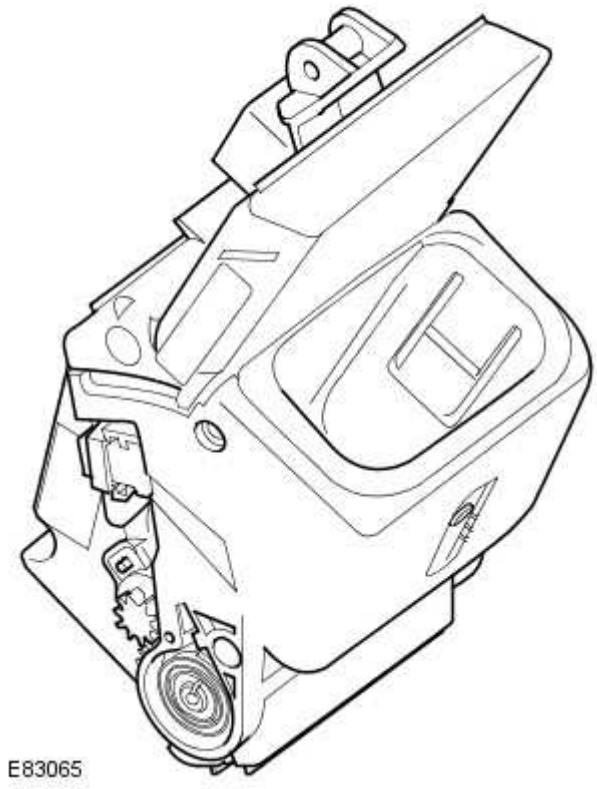

The docking station is located in the upper glovebox. When the VentureCam™ is installed into the docking station, the illumination around the 'Land Rover' logo button changes to a green color to indicate that a good connection has been established with the charging contacts and that charging has commenced.

The docking station receives a permanent battery feed via a fuse in the CJB. A CAN connection provides a link with the IHU for transfer of information. A co-axial cable transmits the video signals from the docking station to the TSD.

The software contained within the docking station contains a power management strategy which monitors ignition status via CAN messages from the IHU and controls power operation for battery charging for a 30 minute period after the ignition is switched off.

VENTURECAM™ OPERATION

The VentureCam™ image is accessed using the 4X4**I** off-road information screen on the TSD. Each VentureCam™ must be learnt and saved to the memory before it can be used. If more than one VentureCam™ is configured to the system, each one can be selected in turn using the camera selection icons.

The VentureCam™ screen is accessed by pressing the VentureCam™ 'movie camera' icon at the bottom of the screen. The right hand side of the TSD will display a black screen with text stating 'VentureCam™ Docked' if a VentureCam™ is known to the system and located in the docking station. The chassis view will remain on the left hand side of the TSD until the VentureCam™ icon is pressed again. The chassis view will then be replaced with camera select information.



The currently selected camera icon is highlighted. Scrolling up or down the available camera's allows selection of a different VentureCam™ or an external video input.

A new VentureCam™ can be added to the system by placing the VentureCam™ into the docking station. A small window will appear prompting to 'Learn Camera'. Selecting 'OK' saves the VentureCam™ into the memory. A second window will appear asking if the user wants to use the new VentureCam™ now. Selecting 'Use Now' will use the new VentureCam™, selecting close will continue with the VentureCam™ highlighted in the camera select list. When a new VentureCam™ is added, it will be placed in the first numerically available position in the list.

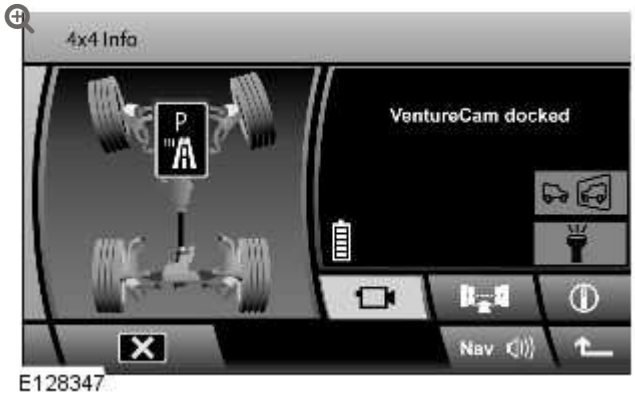

VentureCam™s can also be deleted from the memory by selecting the applicable camera input to be deleted and pressing the 'Delete' icon on the TSD. A small window will appear asking for confirmation of the deletion. Selecting 'OK' deletes that VentureCam™ from the list and leaves that position empty.

If using the VentureCam™ to reverse the vehicle, the view seen on the screen can become confusing to the driver. To assist with this, a mirror view is available which reverses the image similar to that seen in the rear view mirror.

The VentureCam™ should not be used unless the vehicle is off-road. The VentureCam™ should only be used on the exterior of the vehicle. The mount could cause injury if attached to the vehicle interior and an accident occurs.

2012.0 RANGE ROVER (LM), 415-07

VIDEO SYSTEM

DESCRIPTION AND OPERATION

VIDEO AND ENTERTAINMENT SYSTEM COMPONENT LOCATION – RANGE ROVER ULTIMATE

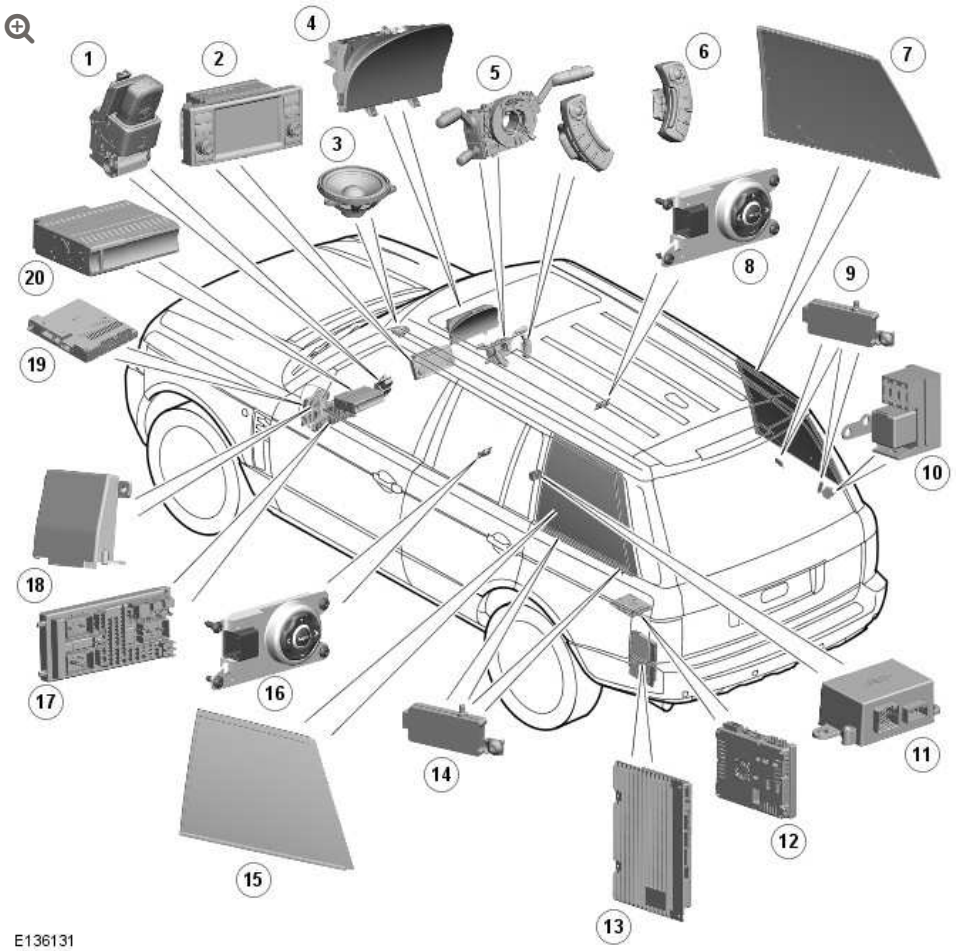

ITEM	DESCRIPTION
1	VentureCam™

ITEM	DESCRIPTION
2	Touch Screen Display (TSD)
3	Speakers
4	Instrument cluster
5	Clockspring
6	Steering wheel switches
7	TV Radio Frequency (RF) antenna - Right Hand (RH)
8	Rear seat audio control switch RH
9	TV antenna RF amplifier
10	Rear entertainment junction box
11	Rear seat audio control relay
12	TV tuner
13	Audio amplifier
14	TV antenna RF amplifier
15	TV RF antenna - Left Hand (LH)
16	Rear seat audio control switch LH
17	Central Junction Box (CJB)
18	Rear Entertainment Control Module (RECM)
19	Integrated Head Unit (IHU)
20	Compact Disc (CD) autochanger

GENERAL

The fibre optic, Media Orientated System Transport (MOST) based system provides audio entertainment for the front and rear seat occupants. The system allows TV to be viewed on front Touch Screen Display (TSD) and listen to audio output via the vehicle speakers. The TV video images can only be displayed on the TSD if the vehicle is below a predetermined speed threshold or has duel view TSD fitted.

The Range Rover Ultimate includes an Apple iPad based rear entertainment system, with Bluetooth® keyboard and headphones. Rear seat passengers can control the vehicle audio output using a rear seat audio control switch to select audio input mode, volume settings and channel or CD track skip functions.

The Range Rover Ultimate audio/infotainment system comprises the following components:

- TV Tuner
- Four TV antennas
- Four TV Antenna amplifiers
- TSD
- Steering wheel switches
- compact disc (CD) autochanger
- Audio amplifier
- Vehicle speakers
- Integrated Head Unit (IHU).

The rear seat entertainment system uses additional components in conjunction with the audio system as follows:

- Rear Entertainment Control Module (RECM)
- Two iPad docking stations
- Two rear seat audio control switches
- Bluetooth keyboard
- Bluetooth headphones
- Rear seat audio control relay
- Rear entertainment junction box.

NOTE:

iPad is a trademark of Apple Inc., registered in the U.S.A. and other countries

FRONT VIDEO SYSTEM – RANGE ROVER ULTIMATE

TOUCH SCREEN DISPLAY

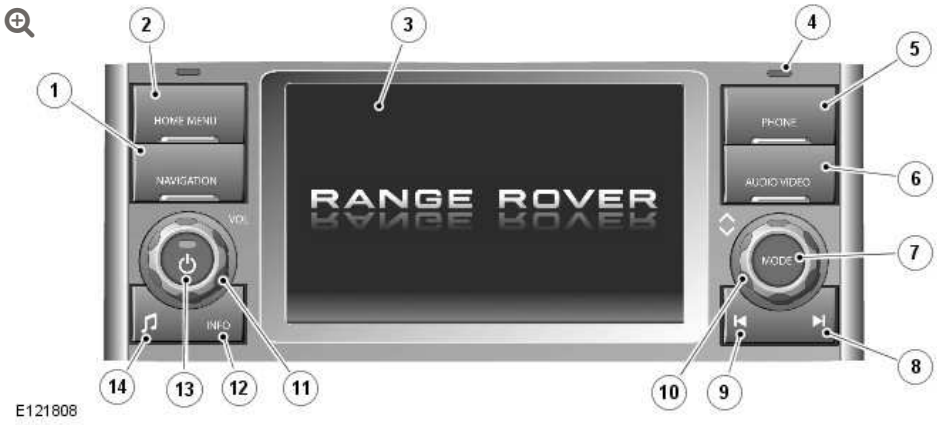

ITEM	DESCRIPTION
1	Navigation
2	Home menu
3	Touch screen display
4	Light sensor
5	Telephone
6	Audio/Video
7	Search up/increase
8	Mode
9	Search down/decrease
10	Scroll up/down
11	Volume

ITEM	DESCRIPTION
12	Information
13	Audio on/off
14	Tone

The Touch Screen Display (TSD) is located in the center of the instrument panel and is the driver control interface for the audio/infotainment system. The TSD is connected to the Media Orientated System Transport (MOST) ring and communicates with the other components in the audio/infotainment system.

The TSD provides driver display and control of the audio system, television, telephone, the rear view camera, proximity cameras, VentureCam™, the Traffic Message Channel (TMC) and the navigation system.

The audio/infotainment systems are operated by a combination of the physical buttons located on each side of the screen and the 'virtual' buttons displayed on the touch screen. For clarification, the physical buttons are referred to as 'buttons' and the touch screen virtual buttons are referred to as 'icons'.

The TSD is a seven inch touch sensitive, 1280 X 480 pixels LCD (liquid crystal display) VGA screen. The dual-view TSD allows the front seat passenger to view television and video images when the car is being driven. The dual-view screen allows the driver to see the navigation or other system screens but not the TV or video when the vehicle is moving. The screen can be switched between single and dual view using the AUDIO VIDEO switch on the TSD.

NOTE:

> Due to legislation, the NAS markets do not receive the dual-view TSD. A single view TSD is available in these markets.

The dual-view TSD uses Parallax Barrier Shutter Technology to alternately hide and reveal columns of pixels to the left and right hand views of the screen. The display comes with a specially designed agar coating to help prevent sunlight bleaching.

Care should be taken with the TSD to ensure its correct operation:

- The screen should be cleaned with specially designed cloth supplied with the vehicle literature pack. Do not use chemical agents or domestic products to clean the screen or any part of the surround.
- Only use your finger to operate the touch screen. Ensure you only use one finger to avoid incorrect entries.
- A short light press of the touch screen is sufficient. Excessive pressure can damage the screen.

TV TUNER

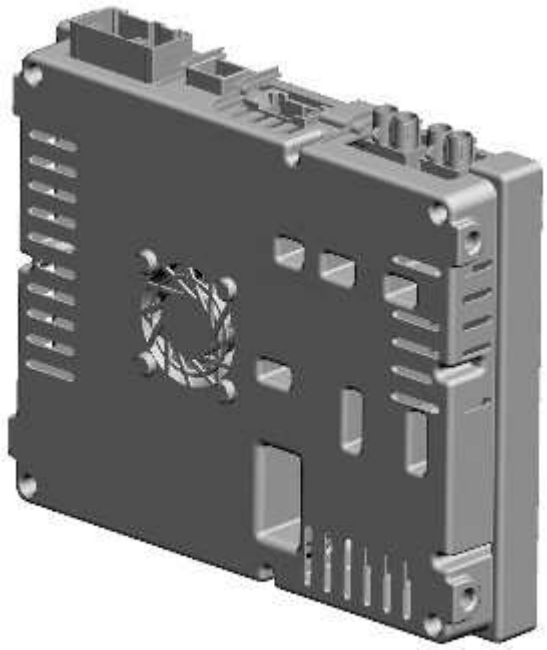

E128344

The TV tuner is located in the left hand rear corner of the luggage compartment. The TV tuner allows the front seat occupants to view the TV transmissions on the TSD, but only if duel view TSD is installed or the vehicle is stationary. The TV tuner is capable of receiving local terrestrial TV transmissions in most locations.

The TV tuner is connected on the MOST ring which it uses to output its audio signals to the amplifier. Video output from the TV tuner is on a screened co-axial cable to the TSD. Four further connections provide for the signal input from four TV antenna amplifiers and four antennas.

The TV tuner contains three internal tuners. Two of the tuners are connected to the antennas. These tuners receive the audio and visual signals. The tuner with the strongest signal is automatically used to display the required TV channel.

The third internal tuner is connected to only one of the antennas and is used to scan the locality for receivable channels. The tuner can detect different frequencies transmitting the same channel and can select the strongest signal for use.

To cope with changes in technology, the TV tuner is able to receive both analogue and digital TV signals. In certain areas both analogue and digital signal strengths will vary. When in an area of weak reception, you may experience a break-up in picture and sound quality, or a blank screen and audio muting. It may be of benefit to retune the viewed station, and possibly switch between analogue and digital TV stations.

The TV tuner is connected to the infotainment system using four harness connectors.

TV ANTENNAS

NOTE:

> On vehicles with remote park heating, the right-hand (RH) rear antenna is fitted with a combined remote park heating/TV antenna amplifier.

Two TV antennas are located in each rear side quarter window. There are three antennas in each window; the forward antenna is a high frequency antenna and the rearward antenna is a low frequency antenna. A third antenna, located between the two TV antennas is for radio reception.

Each antenna is connected directly to a TV RF antenna amplifier which is located just below the rear quarter panel, behind the trim. The four TV antenna amplifiers boost the received RF signal before it is collected and processed by the TV tuner. The TV antennas can receive RF signals of between 48 and 860 MHz.

REAR ENTERTAINMENT SYSTEM – RANGE ROVER ULTIMATE

REAR ENTERTAINMENT CONTROL MODULE (RECM)

NOTE:

CD autochanger removed from illustration for clarity.

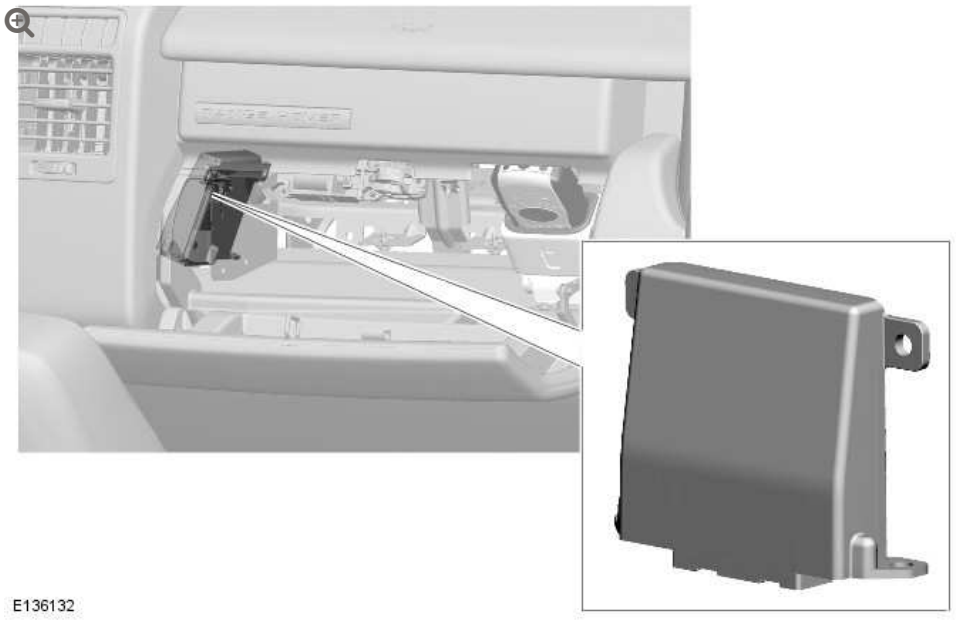

The RECM is located on a bracket, adjacent to the CD (compact disc) autochanger in the rear of the glove compartment.

The RECM provides a gateway between the Integrated Head Unit (IHU) and the medium speed CAN (controller area network) bus system. In response to inputs from the rear audio control switches, the RECM manipulates CAN messages for audio control and routes the Apple iPad audio output into the vehicle audio system.

The RECM also controls the power supply to the chiller unit in the rear floor console. The RECM provides a ground for the relay in the rear entertainment junction box when either the battery saver relay or infotainment relay supplies power to the RECM. When the relay

contacts are closed, power is supplied to the chiller unit. The chiller will operate when either the battery saver relay or infotainment relay in the CJB (central junction box) is energized and the switch on the top of the chiller is turned to the on position. This allows the chiller to begin cooling as soon as the vehicle is unlocked or alternatively, to continue cooling when the ignition is turned off but the infotainment system remains active.

The RECM receives three power supplies:

- One power supply is spliced into the power supply connector for the portable audio module. This supply originates from a fused supply (fuse 67P 15A) in the CJB and is controlled by the infotainment relay. The connection is used by the RECM to monitor the status of the infotainment relay.
- The second power supply originates from a splice into the glove compartment lamp connector power supply. The supply originates from a fused supply (fuse 57P 10A) in the CJB and is controlled by the battery saver relay. The connection is used by the RECM to monitor the status of the battery saver relay.
- The third supply is a fused (5A) permanent battery supply from the rear entertainment junction box.

The RECM contains an isolated charger for the iPads. The charger provides a regulated 5V output to each iPad for charging of the iPad internal battery. The RECM activates the charging function when it receives a power supply from either the battery saver relay or the infotainment relay. The RECM has a maximum current draw of 2.0A with both iPads charging from a fully discharged state.

To protect the vehicle battery, the RECM will disable iPad charging when the voltage at the permanent battery connection on the RJB (rear junction box) falls below 11.0V. Under this condition, iPad charging will be re-enabled once the voltage at the permanent battery connection on the RJB exceeds 11.5V or the RECM is reset at

a voltage above 11.0V. Similarly, the RECM will disable iPad charging when the voltage at the RJB permanent battery connection exceeds 18.0V. Under this condition, the iPad charging will be re-enabled once the voltage at the RJB permanent battery connection falls below 15.5V or the RECM is reset at a voltage below 18.0V.

Each rear seat audio control switch is connected to the RECM. Operation of the switch positions creates a ground path to the RECM. The switch selection is detected by the RECM which then modifies a CAN message which is passed to the IHU to perform the requested function.

The RECM controls the rear floor console mood lighting. The RECM receives a PWM (pulse width modulation) input from the instrument panel illumination circuit. The PWM duty-cycle is dependant on the position of the instrument panel illumination dimmer rheostat. The RECM monitors the PWM input and produces a PWM output on the ground connection to the rear floor console mood lighting LED (light emitting diode)'s.
For additional information, refer to: Interior Lighting (417-02, Description and Operation).

The RECM also controls the operation of the relays in the rear seat audio control relay. On receipt of the request from the 'MODE' switch on one of the rear seat audio control switches, the RECM energizes or de-energizes the relays to switch the audio output from the requested iPad.

The RECM has four ground connections which are connected at connector C2561 at the base of the driver's side 'A' pillar. This also provides the ground connections for the rear seat audio control switches.

Test Mode

The RECM has a test mode which allows various functions of the RECM to be tested for correct operation.

When the system is powered up by either the infotainment relay or the battery saver relay becoming active, the RECM monitors the input from the instrument panel lighting circuit.

If, within 15 seconds of the infotainment relay becoming active, the RECM detects the five separate changes of instrument panel light input status generated by the lighting control switch being switched from off to on (side lamp position) five times, the RECM will enter test mode.

Test Mode Activation Using Lighting Control Switch

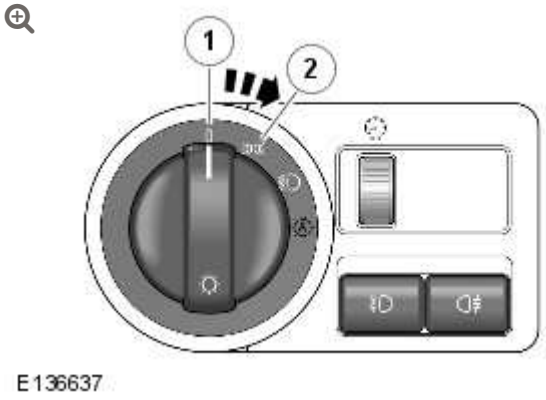

Confirmation of entering test mode is given by the LH (left-hand) and RH (right-hand) rear seat audio control switch MODE lamps being illuminated for 3 seconds.

Entry to Test Mode Confirmation

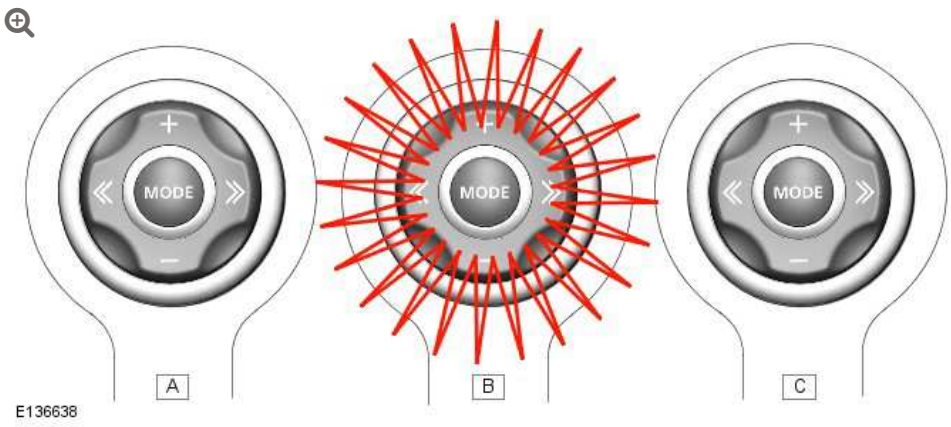

ITEM	DESCRIPTION
A	Before test mode
B	Test mode entered (3 second flash)
C	Ready to display status

The following functions are available in test mode:

- Operate medium speed CAN bus gateway
  - Each rear seat audio control switch will flash in a red color to indicate CAN activity. If the LH switch is not flashing, then there is a problem with the CAN bus between the RECM and the IHU. If the RH switch is not flashing in a red color, there is a problem with the CAN bus between the RECM and the rest of the modules on the vehicle medium speed CAN bus.

CAN Gateway Activity

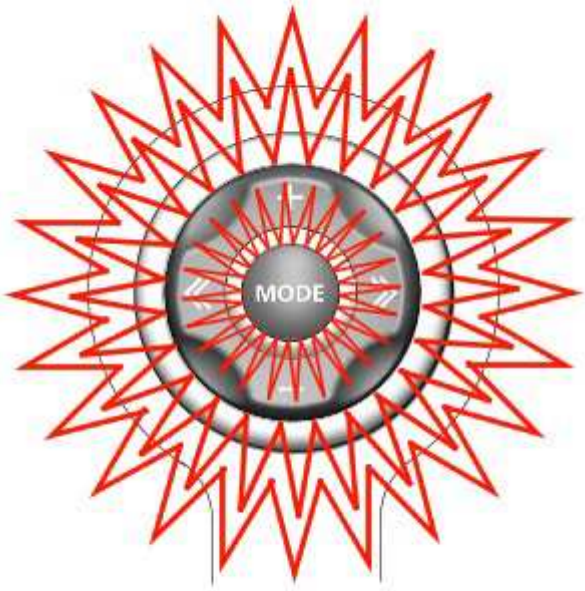

E136639

- Enable instrument panel illumination
  - The rear seat audio control switch backlighting will be permanently illuminated in green while RECM is in test mode,
- Cycle the chiller relay in the rear seat audio control relay every 2 seconds
  - The LED in the on/off switch for the chiller unit will flash on and off to show the relay is operating.
- Disable normal function for rear seat audio control switches
  - The rear seat audio control switch function will not operate the normal function while RECM is in test mode.
- Illuminate both MODE switches continuously when any switch is pressed on the rear seat audio control switches
  - Any button press (volume +/-, skip >>/<< and MODE) will cause both rear seat audio control switches to illuminate in a red color.

Rear Audio Control Switch Function

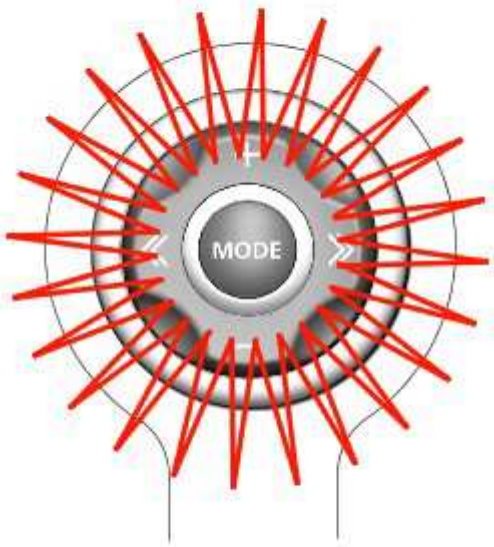

E136640

The RECM will exit test mode if none of the rear audio control switches are pressed for 30 seconds or the power to the module is reset.

Audio/Video System Software Downloads

Due to the complexity of the Audio/Video system, software uploads from the Land Rover approved diagnostic system to the IHU or any component in the MOST ring requires the disconnection of the RECM from the medium speed CAN bus. A by-pass procedure allows the medium speed CAN connections to the RECM to be re-routed to by-pass the module.

NOTE:

> This procedure is not required for DTC (diagnostic trouble code) retrieval or any other diagnostic procedures.

The RECM harness has been designed so that disconnection from the CAN bus is a simple process. The RECM harness uses two in-line connectors, each containing two terminal pins. These are located approximately 300 mm from the RECM and are secured at the rear of the glove compartment with cable ties to the vehicle body harness.

The by-pass procedure is as follows:

1. Remove 3 screws and remove the passenger side closing panel from below the glove compartment. Disconnect the electrical connector from the footwell lamp.

2. Identify the two in-line connectors which are secured with a cable tie to the vehicle main body harness behind the glove compartment. Removal of the cable tie improves access. Note the order in which the connectors are joined to help with restoring the connections after the procedure has been performed. The RECM connectors are identified by a label on the harness.

Connectors before disconnection

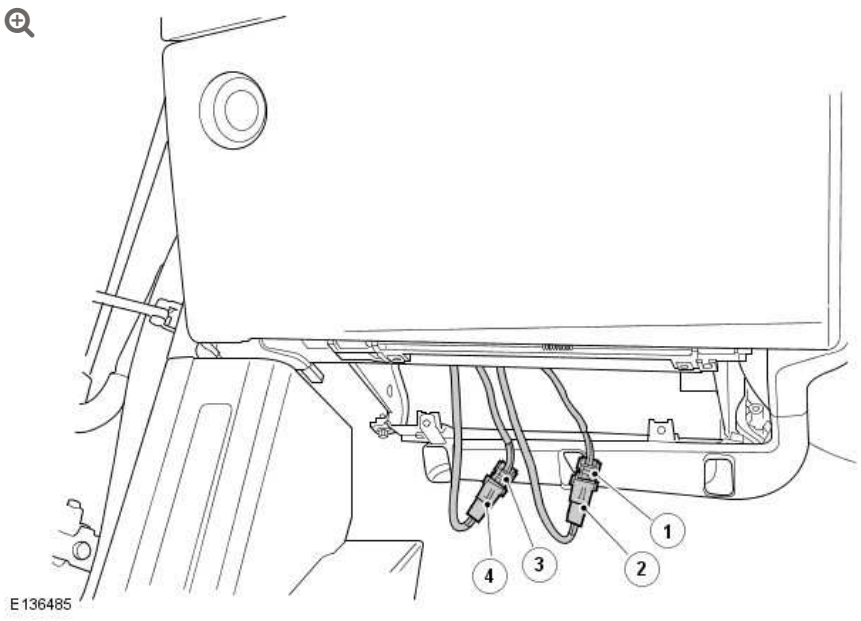

3. Disconnect the two in-line connectors 1 and 2, and 3 and 4. Identify the male connector (4) leading to the IHU and plug into the female connector (1) leading to the medium speed CAN bus. Leave both connector halves (2 and 3) associated with the RECM disconnected.

NOTE:

Connector gender is denoted by the connector terminal pins and not the connector housing.

Connectors ready for software download

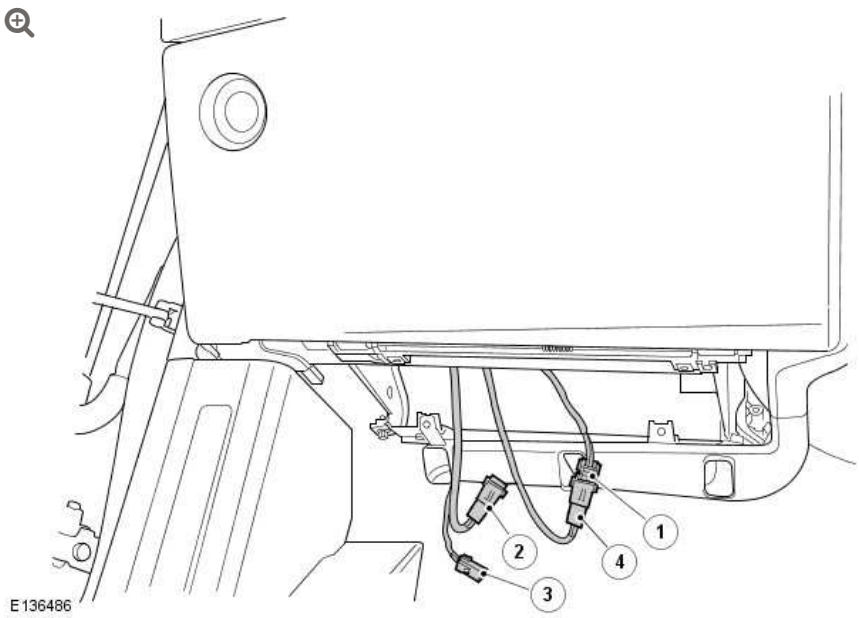

4. Using the approved Land Rover diagnostic equipment, complete the software download.

5. Once the download is complete, disconnect the in-line connectors and reconnect as noted in step 2.

6. Reconnect the footwell lamp connector and replace the passenger side closing panel and secure with 3 screws.

REAR SEAT AUDIO CONTROL SWITCHES



ITEM	DESCRIPTION
1	Electrical connector
2	Housing
3	Audio volume and skip switch
4	MODE select switch

A rear seat audio control switch is located in the rear of each front seat, behind the iPad docking station. The switches are unique to the Range Rover Ultimate. The switches are accessed by raising the iPad docking station.

NOTE:

> The iPad cannot be switched on or off or woken up using the rear seat audio control switches.

The switch is secured behind the seat backboard cover with four self tapping screws. The switch is connected electrically by an additional harness located in each front seat. The harness also supplies iPad power from the RECM and audio signals from the iPad docking station connector to the rear seat audio control relay.

Each rear seat audio control switch is connected directly to the RECM. The RECM processes the switch operation and converts the switch operation into CAN messages to the IHU to control the audio output and mode selection.

Both rear seat audio control switches receive a permanent fused (10A) power supply from the rear entertainment junction box.

The signals from each switch to the RECM are common, except for the MODE switches. The status of each switch is monitored by the RECM for volume, skip, MODE LH and MODE RH. Pressing a switch

will cause the RECM to modify an existing CAN message and pass it to the IHU. Both MODE switches will perform the same function provided they are pressed momentarily. The switch operation is performed once the switch press has been confirmed by the RECM. The MODE switch function is only processed once the switch has been released.

Pressing and holding the MODE switch for 3 seconds selects the iPad associated with the switch for audio output via the vehicle audio system. The switching between the two iPads is controlled by the rear seat audio control relay. The audio source selection is confirmed by the MODE switch being illuminated in a red color for 0.5 seconds.

The MODE switches can also be used to change the audio system source. The options are displayed on the TSD and the MODE switch can be used to scroll through the options to select the required audio source. iPad audio is selected by choosing the 'AUX' option on the TSD.

The rear seat audio control switches can be disabled with the rear window isolation switch. The RECM receives a CAN message for the status of the rear window isolation switch and will turn off the illumination to both rear audio control switches. The MODE switch operation of the rear seat audio control relay however, is not affected by the status of the rear window isolation switch.

IPAD DOCKING STATION

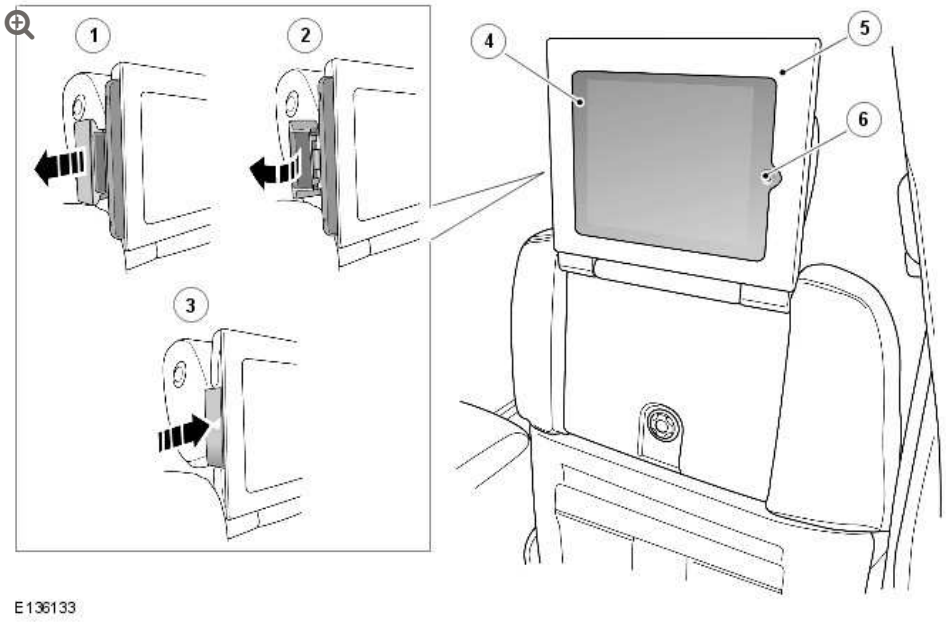

ITEM	DESCRIPTION
1	Pull to unlatch iPad from docking station
2	Pivot lever to remove iPad from docking station
3	Push to install iPad and lock with lever
4	iPad
5	Casing, latch and docking station assembly
6	iPad mode button

CAUTION:

The docking station is only compatible with the iPad version it was designed for. For example, attempting to dock an iPad2 into a docking station for an iPad1 may damage both the iPad and the docking station.

An iPad docking station is located in the rear of each front seat. Each docking station comprises a moveable lid, which contains an iPad casing and latch assembly and a harness assembly.

When the lid is in its stowed position, the lid sits in a cut out in the rear seat back. The lid is secured with magnets to retain it in the closed position. The lid is lifted through 180 degrees to access the iPad and docking station and the rear seat audio control switch.

When the lid is up, the iPad is accessible and can be switched on using the main on/off switch in the top RH corner of the iPad. The mode button on the iPad is used to select the iPad functions.

NOTE:

> The iPad cannot be switched on or off using the rear seat audio control switches. The iPad must be switched on using the main on/off switch in the top RH corner of the iPad. If the iPad is on and in sleep mode, it can be woken up using the mode button on the iPad.

The iPad can be removed from the docking station by pulling the latch outwards to release the iPad from the docking station and electrical connector. Rotating the latch allows the iPad to then be pulled from the casing and latch assembly. The iPad is automatically disconnected from the harness connector when it is removed. Fitting the iPad is achieved by sliding the iPad, correctly orientated, into the casing and latch assembly. The iPad, when pushed fully into the casing, will engage with the harness connector for audio and charging and the latch will click to secure the iPad in the casing.

The iPad will charge when the RECM receives a power supply from either the battery saver relay or the infotainment relay.

BLUETOOTH KEYBOARD AND HEADPHONES

A Bluetooth® keyboard and headphones are supplied for use with the iPads.

Both the keyboard and headphones require pairing with the iPads and this should be performed in accordance with the instructions supplied with the iPad and the accessory.

The keyboard has a specific shaped slot in the rear floor console stowage box for storage. The headphones can be stored in the pocket in the rear of each front seat.

REAR SEAT AUDIO CONTROL RELAY

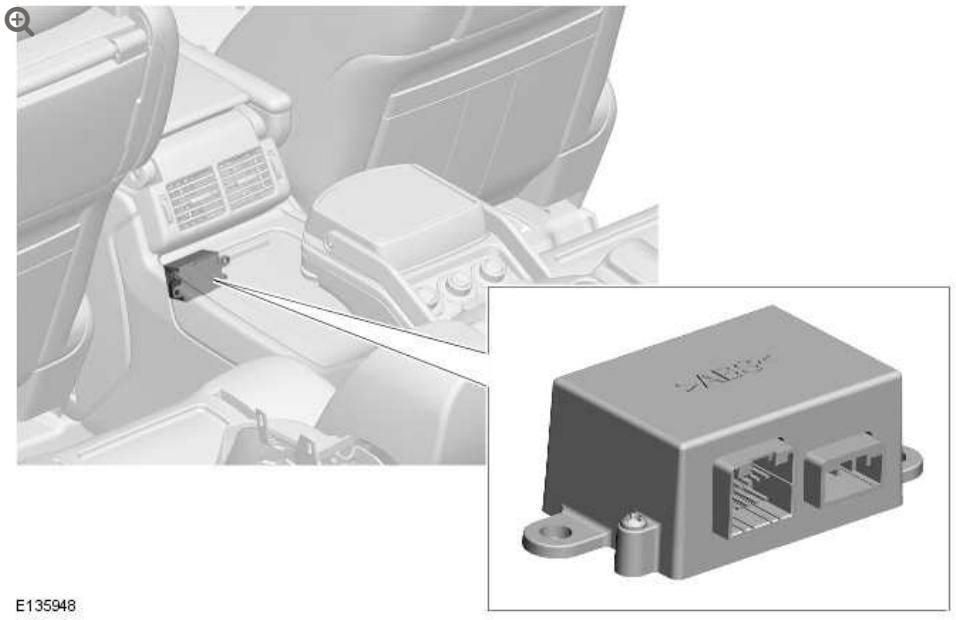

The rear seat audio control relay is an additional component unique to Range Rover Ultimate. The relay is located at the rear of the front floor console, below the rear passenger compartment air vents. The relay is secured to the front floor console with two flange bolts.

The rear seat audio control relay receives audio output from an individual iPad and forwards the output to the IHU. The control relay ensures that only the output from one selected iPad is passed to the IHU for audio through the vehicle speaker system. Audio output from both iPads cannot be passed to the IHU simultaneously.

The rear seat passenger(s) can select which iPad audio output should be connected to the vehicle audio system by pressing and holding the MODE switch on the required side for more than 3 seconds. This

is received by the RECM which confirms the selection by illuminating the MODE switch in a red color for 0.5 seconds. The RECM simultaneously outputs another continuous signal to the rear seat audio control relay to switch the applicable left and right audio outputs and the applicable audio ground connections via three relays within the relay.

The selected iPad for the audio output is not stored when the ignition is in off mode and the relay in the rear entertainment junction box is de-energized. A default start-up routine always activates the iPad on the RH side of the vehicle.

REAR ENTERTAINMENT JUNCTION BOX

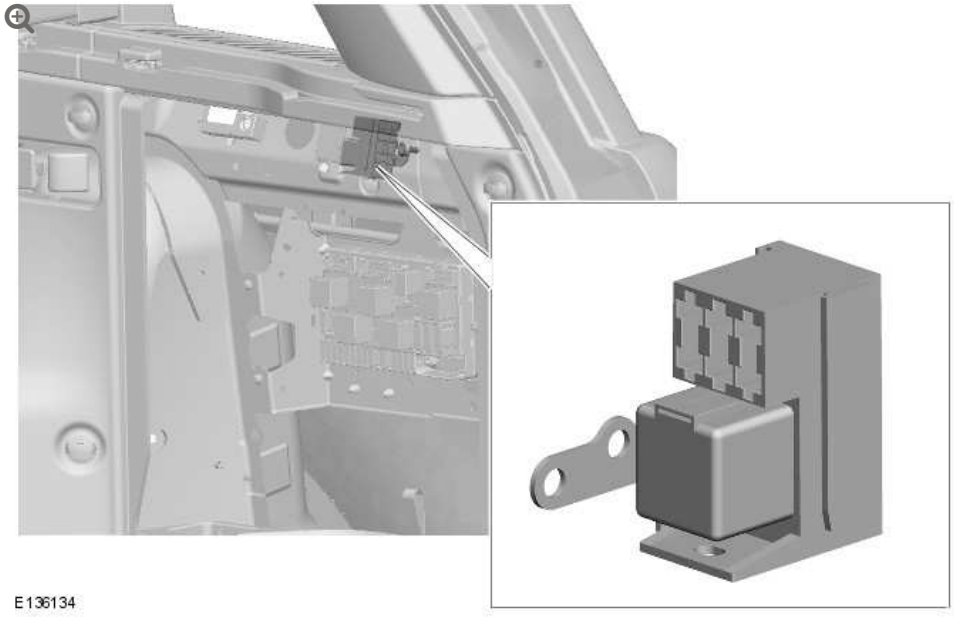

The rear entertainment junction box is located in the RH rear of the luggage compartment, above the RJB. The junction box is secured to the vehicle body by an integral bracket using a bolt and a scrivet.

The rear entertainment junction box contains two fuses and one relay. The two fuses, F1 (5A) and F2 (10A), supply a permanent battery supply to the RECM and the rear seat audio control switches respectively. Fuse F2 also supplies the rear console mood lighting, the rear seat audio control relay, the rear stowage bin illumination and the chiller unit circuits.

The relay in the junction box is controlled by the RECM and supplies battery power to the chiller unit and the rear stowage bin illumination.
For additional information, refer to: Refrigeration (412-05, Description and Operation).

CONTROL DIAGRAM - VIDEO AND ENTERTAINMENT SYSTEM - RANGE ROVER ULTIMATE

NOTE:

A = Hardwired; **N** = Medium Speed CAN Bus; **O** = LIN Bus; **P** = MOST **R** = SPDIF (Sony); **AG** = Infra Red

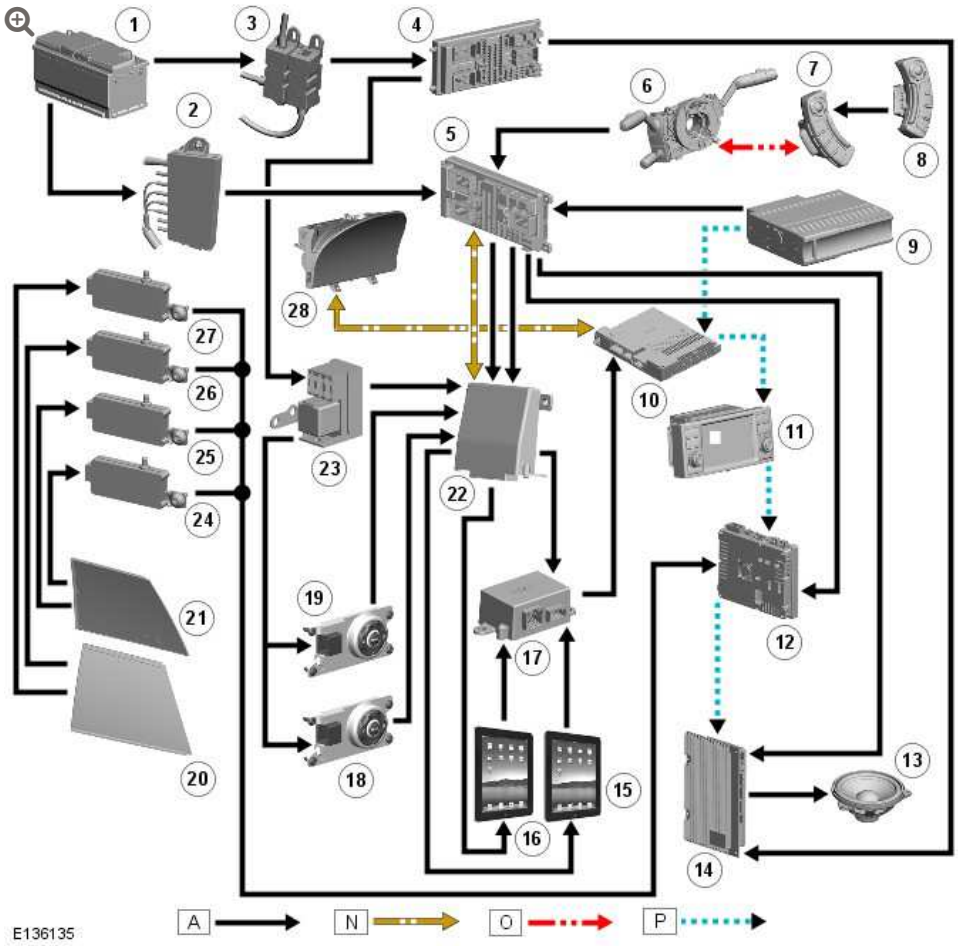

ITEM	DESCRIPTION
1	Battery
2	BJB (battery junction box)
3	BJB2 (battery junction box 2)
4	RJB
5	CJB
6	Clockspring
7	LH steering wheel switch
8	RH steering wheel switch
9	CD autochanger
10	Integrated Head Unit (IHU)
11	Touch Screen Display (TSD)
12	TV tuner
13	Speakers
14	Audio amplifier
15	RH iPad and docking station
16	LH iPad and docking station
17	Rear seat audio control relay
18	LH Rear seat audio control switch
19	RH Rear seat audio control switch
20	TV RF antenna - LH
21	TV RF antenna - RH
22	Rear Entertainment Control Module (RECM)
23	Rear entertainment junction box
24	TV antenna RF amplifier
25	TV antenna RF amplifier
26	TV antenna RF amplifier

ITEM	DESCRIPTION
27	TV antenna RF amplifier
28	Instrument cluster

VENTURE CAM™ – COMPONENT LOCATION

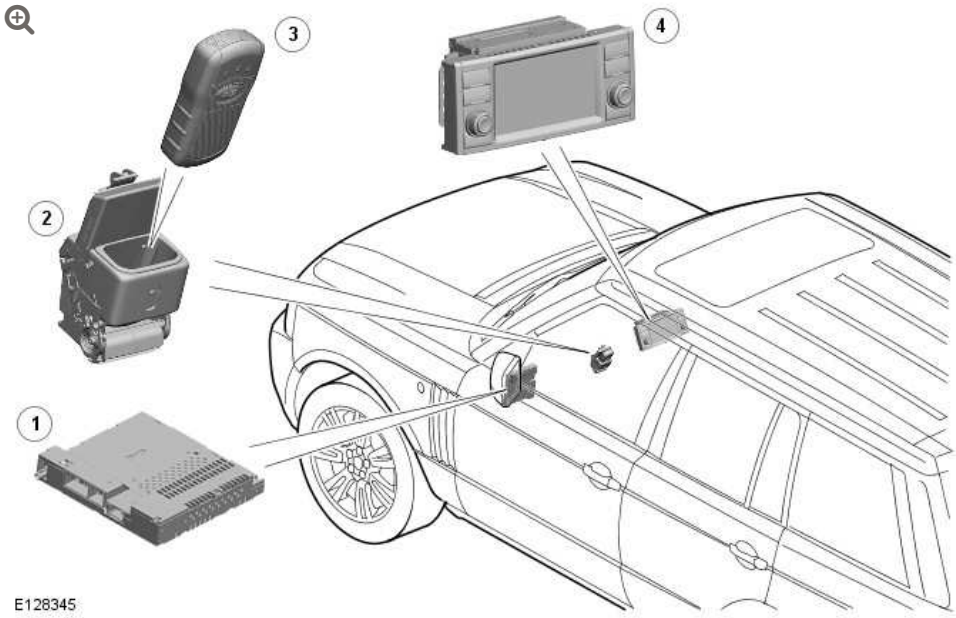

ITEM	DESCRIPTION
1	IHU (integrated head unit)
2	VentureCam™ docking station
3	VentureCam™
4	TSD (touch screen display)

GENERAL

VentureCam™ consists of one or more remote cameras which transmit their images onto the Touch Screen Display (TSD) to provide the driver with a number of benefits, for example manoeuvring the vehicle or connecting a trailer. Additionally, the system can receive video transmissions from other compatible camera units such as a

home Closed Circuit Television (CCTV) camera. The system can support up to sixteen VentureCam's and an additional four external video input units.

The system comprises one or more VentureCam's and a docking station. The system is connected into the infotainment system and the video images are displayed on the TSD.

The VentureCam™ receives signals via a Ultra High Frequency (UHF) transmission from the docking station for remote operation of the camera. The frequencies can be 433 MHz or 915 MHz depending on the market. The VentureCam™ transmits its video images to the docking station on a 2.4 GHz RF microwave transmission. The video is provided in an NTSC format at 25 frames per second. The microwave transmission is limited to an output of 10 mW to avoid conflicting with broadcasting legislation in most countries.

The VentureCam™ can receive and transmit signals at a distance of between 20 and 30 meters (65 and 98 feet). This range is dependant on the surrounding environment, i.e. the signals may be blocked or limited by buildings, vehicles etc.

The VentureCam™ system is connected to the TSD for video display by a co-axial cable. A controller area network (CAN) connection allows the Integrated Head Unit (IHU) to communicate with the docking station for transmission of infotainment relay energized signals etc.

VentureCam™ can be accessed by selecting 4X4i information on the TSD using a physical button or an icon on the screen. VentureCam™ is then selected by pressing the camera icon on the TSD.

VENTURECAM™

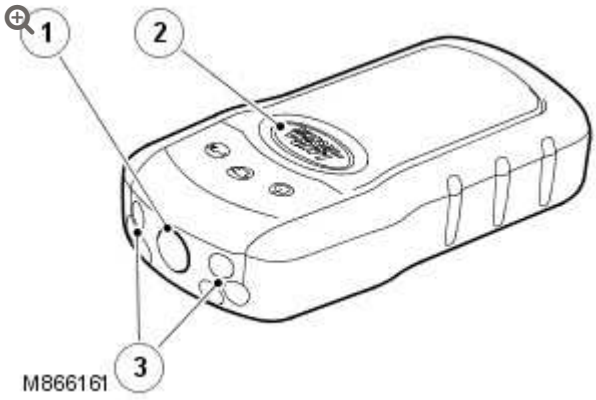

ITEM	DESCRIPTION
1	Camera lens
2	Control switch
3	light emitting diode (LED)

The VentureCam™ is a compact unit containing hardware and software for control of video image capture and transmission, six red LED for an additional light source and a control button.

The control button allows the VentureCam™ to be switched on or off and to activate the LED. The selections are made sequentially with the button, e.g.; the first press switches the camera function on, the second press switches the camera off and switches the LED on (torch function) and a third press switches the whole unit off. Using this button on the VentureCam™, only the camera or the torch function can be selected, they cannot be selected to work together at the same time. However, when in the camera function mode, the LED can also be made active by pressing the torch icon visible in the TSD. This will allow the LED to enhance the VentureCam™ view in low ambient light levels.

When the camera mode is selected, by pressing the button once, the area around the 'Land Rover' logo button is illuminated in a green

color. If the illumination flashes, this indicates that the camera is awaiting a command from the TSD.

The VentureCam™ has an integral re-chargeable battery which, when fully charged, allows approximately 3 hours continuous use of video transmission. If the unit is used solely as a torch with only the LED illuminated, the battery will provide approximately 4 hours continued use. The VentureCam™ battery has a serviceable life of approximately 8 to 10 years, depending on its usage. The battery cannot be replaced separately, so if the battery fails, the VentureCam™ must be replaced.

The VentureCam™ is an electronic device and therefore should be handled with care. If the unit becomes dirty, clean only with a damp cloth, do not use detergents or solvent based cleaners. Avoid high temperatures, do not store the VentureCam™ in direct sunlight, always store in the docking station, glove compartment or door pocket.

VENTURECAM™ MOUNT

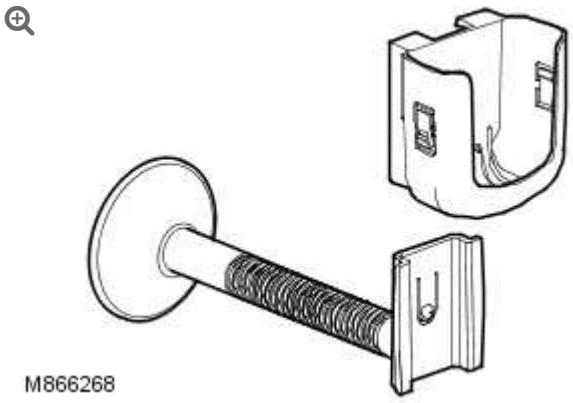

An accessory mount is available with a suction cup which allows the VentureCam™ to be located inside or outside the vehicle. The holder has a removable holster into which the VentureCam™ is secured. The holster has a standard camera thread which allows it to be mounted on a tripod for instance. The suction cup has a control lever which creates a vacuum to provide the suction to secure the

mount. To release the suction cup, lower the lever to release the vacuum.

BATTERY CHARGING

The battery is re-charged when the unit is in the docking station. Two spring loaded pins in the docking station connect with contacts on the VentureCam™. The charging will occur only when the VentureCam™ is in the docking station and the ignition switch is in position II. Power is supplied direct from the vehicle battery via a fuse in the central junction box (CJB) and is permanently live. However, charging will only occur when the IHU receives an ignition on signal via the CAN. The IHU then sends a charge message to the docking station via its CAN connection. The docking station software will allow further charging of the battery for a period of 30 minutes after an ignition off signal is received from the IHU.

The battery condition is shown on the TSD VentureCam™ display. A charge level indicator is displayed to indicate the charge level of the VentureCam™ battery.

One segment on the battery display indicates that the battery is almost fully discharged. The docking station will apply a slow charge to the battery to ensure the battery charge is fully recovered and may stay in this mode for a long period of time, depending on how low the battery charge has become. If a rising row of segments is indicated on the battery display, the docking station is applying a fast charge to the battery and will fully charge the battery in the minimum period of time. A complete and stationary row of segments indicates a fully charged battery.

If the battery is completely discharged, it will take approximately 2 hours of continuous charging with the vehicle engine running to restore the battery to a fully charged condition.

It is recommended that the VentureCam™ is stored in the docking station when not in use. The docking station will ensure that the

battery is kept at the optimum charge level. If the customer has more than one VentureCam™, it is recommended that the units are cycled on a weekly basis to ensure that the battery charge level is maintained.

DOCKING STATION

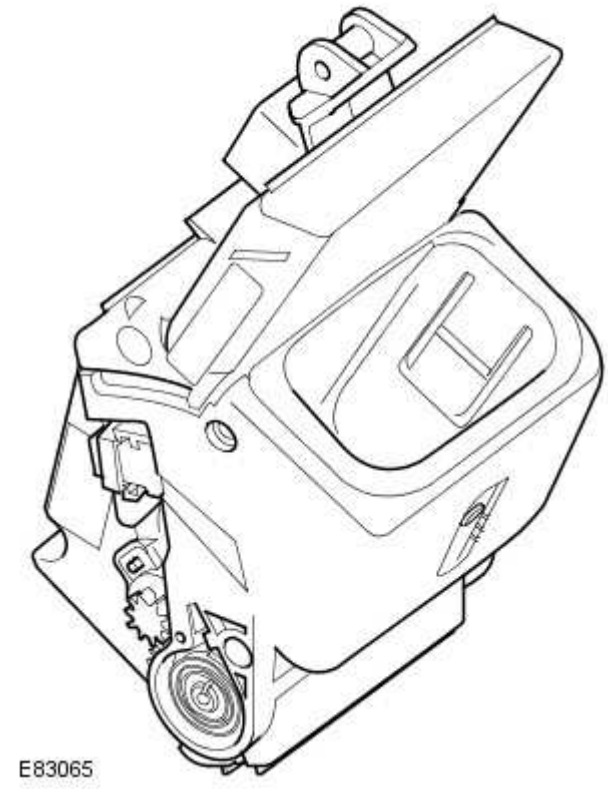

The docking station is located in the upper glove compartment. When the VentureCam™ is installed into the docking station, the illumination around the 'Land Rover' logo button changes to a green color to indicate that a good connection has been established with the charging contacts and that charging has commenced.

The docking station receives a permanent battery feed via a fuse in the CJB. A CAN connection provides a link with the IHU for transfer of information. A co-axial cable transmits the video signals from the docking station to the TSD.

The software contained within the docking station contains a power management strategy which monitors ignition status via CAN messages from the IHU and controls power operation for battery charging for a 30 minute period after the ignition is switched off.

VENTURECAM™ OPERATION

The VentureCam™ image is accessed using the 4X4**i** off-road information screen on the TSD. Each VentureCam™ must be learnt and saved to the memory before it can be used. If more than one VentureCam™ is configured to the system, each one can be selected in turn using the camera selection icons.

The VentureCam™ screen is accessed by pressing the VentureCam™ 'movie camera' icon at the bottom of the screen. The right hand side of the TSD will display a black screen with text stating 'VentureCam™ Docked' if a VentureCam™ is known to the system and located in the docking station. The chassis view will remain on the left hand side of the TSD until the VentureCam™ icon is pressed again. The chassis view will then be replaced with camera select information.



The currently selected camera icon is highlighted. Scrolling up or down the available camera's allows selection of a different VentureCam™ or an external video input.

A new VentureCam™ can be added to the system by placing the VentureCam™ into the docking station. A small window will appear prompting to 'Learn Camera'. Selecting 'OK' saves the VentureCam™ into the memory. A second window will appear asking if the user wants to use the new VentureCam™ now. Selecting 'Use Now' will use the new VentureCam™, selecting close will continue with the VentureCam™ highlighted in the camera select list. When a new VentureCam™ is added, it will be placed in the first numerically available position in the list.

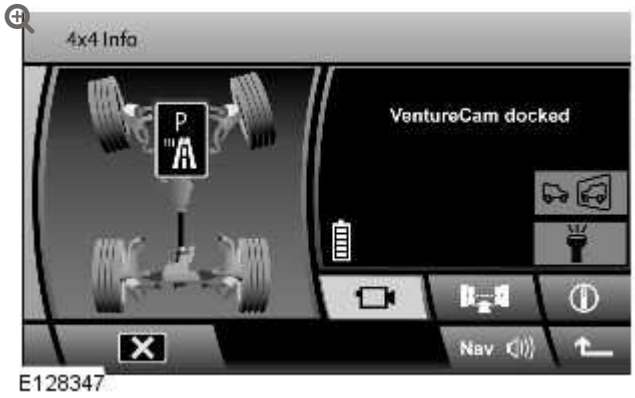

VentureCam™s can also be deleted from the memory by selecting the applicable camera input to be deleted and pressing the 'Delete' icon on the TSD. A small window will appear asking for confirmation of the deletion. Selecting 'OK' deletes that VentureCam™ from the list and leaves that position empty.

If using the VentureCam™ to reverse the vehicle, the view seen on the screen can become confusing to the driver. To assist with this, a mirror view is available which reverses the image similar to that seen in the rear view mirror.

The VentureCam™ should not be used unless the vehicle is off-road. The VentureCam™ should only be used on the exterior of the vehicle. The mount could cause injury if attached to the vehicle interior and an accident occurs.

EXTERIOR LIGHTING

SPECIFICATIONS

General specifications

Item	Specification	Rating
Low beam headlamp bulb - vehicles with conventional headlamps	Halogen H7 Long Life (LL)	55W
High beam headlamp bulb - vehicles with conventional headlamps	Halogen H7 LL	55W
High intensity discharge headlamp bulb - low and high beam	D3S	35W
Cornering lamp	2 LED's - high output	-
Static bending lamp	2 LED's - high output	-
Front fog lamp bulb	Halogen H11	55W
Rear fog lamp	3 LED's - high output	-
Front turn signal lamp	12 LED's	-
Rear turn signal lamp	12 LED's	-
Side repeater lamp bulb	Capless	5W
Front side lamp	14 LED's	-
Stop lamp	19 LED's	-
High mounted stop lamp (HMSL)	20 LED's	-
Tail lamp	21 LED's	-

License plate lamp bulb	Festoon	5W
Reversing lamp bulb	Bayonet H6W	6W
Side marker lamp bulb - front and rear-Federal	1 LED	-

WARNING:

Refer to the general information - electrical precautions section of this manual prior to carrying out any procedures on the high intensity discharge headlamp system installed to certain vehicles.

Torque specifications

ITEM	NM	LB-FT	LB-IN
Adaptive front lighting module bolts	10	7	-
Front fog lamp bolts	2.5	-	22
Headlamp bolts	4	-	35
Rear lamp bolts	2	-	18

EXTERIOR LIGHTING

ADAPTIVE FRONT LIGHTING MODULE (G1224436)

REMOVAL AND INSTALLATION

REMOVAL

NOTE:

Removal steps in this procedure may contain installation details.

1. Disconnect the battery ground cable.
   Refer to: Specifications (414-00, Specifications).
2. Refer to: Lower Glove Compartment (501-12, Removal and Installation).
3.

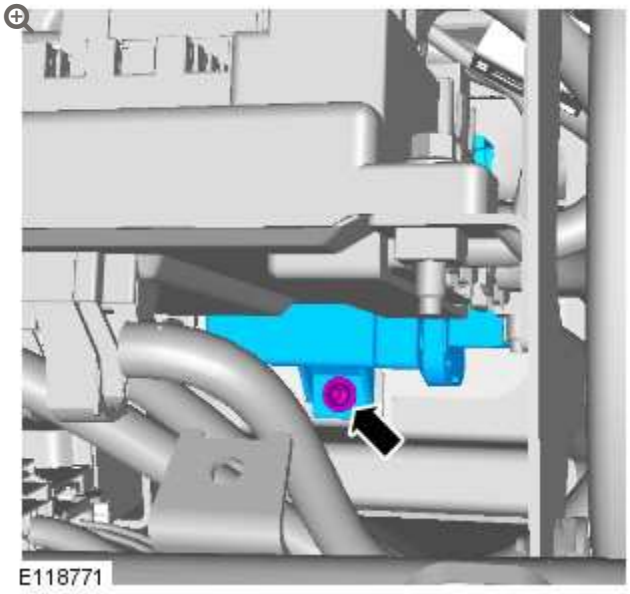

Torque: **10 Nm**

4.

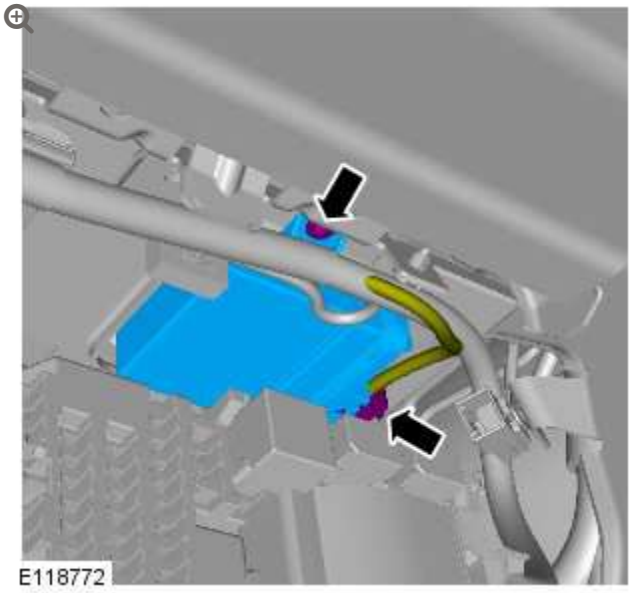

Torque: **10 Nm**

5.

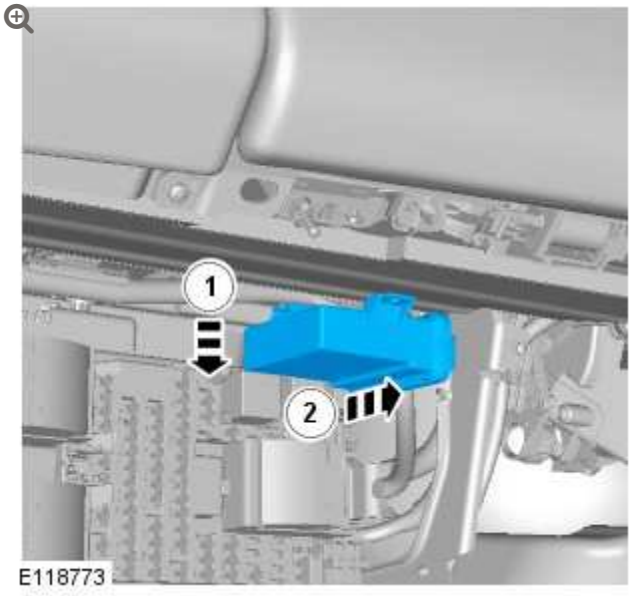

INSTALLATION

1.

NOTES:

- Do not calibrate if the module is removed for access only. Calibration is only required if a new module is installed.
- New units must be configured using the Programmable Module Installation Routine in the diagnostic tool.

To install, reverse the removal procedure.

EXTERIOR LIGHTING

DIAGNOSIS AND TESTING

PRINCIPLE OF OPERATION

For a detailed description of the exterior lighting system and operation, refer to the relevant Description and Operation section of the workshop manual. REFER to: Exterior Lighting (417-01 Exterior Lighting, Description and Operation).

INSPECTION AND VERIFICATION

CAUTION:

Diagnosis by substitution from a donor vehicle is **NOT** acceptable. Substitution of control modules does not guarantee confirmation of a fault and may also cause additional faults in the vehicle being checked and/or the donor vehicle.

NOTE:

Check and rectify basic faults before beginning diagnostic routines involving pinpoint tests.

1. Verify the customer concern.

2. Visually inspect for obvious signs of mechanical or electrical damage.

Visual Inspection

MECHANICAL	ELECTRICAL
▪ Lighting control switch and installation ▪ Rain/Light sensor condition and installation ▪ Wiper control switch and installation	▪ Fuses ▪ Relays ▪ Wiring harness ▪ Loose or corroded connector(s) ▪ Battery Junction Box (BJB) ▪ Central Junction Box (CJB) ▪ Rain/Light sensor control module ▪ Local Interconnect Network (LIN) circuits ▪ Controller Area Network (CAN) circuits

3. If an obvious cause for an observed or reported concern is found, correct the cause (if possible) before proceeding to the next step.

4. If the cause is not visually evident, verify the symptom and refer to the Symptom Chart, alternatively check for Diagnostic Trouble Codes (DTCs) and refer to the relevant DTC Index.

SYMPTOM CHART

SYMPTOM	POSSIBLE CAUSES	ACTION
Side and headlamp(s) inoperative when the automatic headlamp	▪ Fuse(s) blown	Check the fuse(s). Check the lighting and wiper control switch functions. Check the automatic

SYMPTOM	POSSIBLE CAUSES	ACTION
switch option is selected	▪ Lighting control switch fault ▪ Wiper control switch fault ▪ Circuit fault ▪ Rain/Light sensor fault ▪ LIN circuit fault	headlamp circuit. Refer to the electrical guides. Check for DTCs indicating a rain/light sensor or LIN system fault.
Automatic headlamp switch illumination inoperative	▪ Fuse(s) blown ▪ Lighting control switch fault ▪ Circuit fault ▪ Automatic headlamp relay fault	Check the fuse(s). Check the lighting control switch function. Check the automatic headlamp relay circuit. Refer to the electrical guides. Check for DTCs indicating an automatic headlamp fault.

DTC INDEX

For a list of Diagnostic Trouble Codes (DTCs) that could be logged on this vehicle, please refer to Section 100-00. REFER to: Diagnostic Trouble Code (DTC) Index - DTC: Module Name: Central Junction Box (100-00, Description and Operation).

EXTERIOR LIGHTING

DIAGNOSIS AND TESTING

PRINCIPLE OF OPERATION

For a detailed description of the headlamp leveling system and operation, refer to the relevant Description and Operation section of the workshop manual. REFER to: Exterior Lighting (417-01 Exterior Lighting, Description and Operation).

INSPECTION AND VERIFICATION

CAUTION:

Diagnosis by substitution from a donor vehicle is **NOT** acceptable. Substitution of control modules does not guarantee confirmation of a fault and may also cause additional faults in the vehicle being checked and/or the donor vehicle.

NOTE:

Check and rectify basic faults before beginning diagnostic routines involving pinpoint tests.

1. Verify the customer concern.

2. Visually inspect for obvious signs of mechanical or electrical damage.

Visual Inspection

MECHANICAL	ELECTRICAL
▪ Headlamp leveling motor(s) and linkage (s) condition and installation ▪ Lighting control switch and installation ▪ Left-hand steering column multifunction switch and installation	▪ Fuses ▪ Wiring harness ▪ Loose or corroded connector (s) ▪ Battery Junction Box (BJB) ▪ Central Junction Box (CJB) ▪ Adaptive Front Lighting System (AFS) module ▪ Headlamp power modules ▪ Engine Control Module (ECM) ▪ Anti-lock Brake System (ABS) control module ▪ Air suspension control module ▪ Local Interconnect Network (LIN) circuits ▪ Controller Area Network (CAN) circuits

3. If an obvious cause for an observed or reported concern is found, correct the cause (if possible) before proceeding to the next step.

4. If the cause is not visually evident, verify the symptom and refer to the Symptom Chart, alternatively check for Diagnostic Trouble Codes (DTCs) and refer to the relevant DTC Index.

SYMPTOM CHART

SYMPTOM	POSSIBLE CAUSES	ACTION
Headlamp leveling system inoperative	▪ Fuse(s) blown ▪ Leveling motor/linkage fault ▪ Headlamp leveling circuit fault ▪ Air suspension system fault	Check the fuse(s) condition. Check the headlamp leveling motor and linkage condition. Check the headlamp leveling circuit. Refer to the electrical guides. Check for DTCs indicating headlamp leveling circuit and air suspension system fault(s).
Headlamp alignment incorrect		

DTC INDEX

For a list of Diagnostic Trouble Codes (DTCs) that could be logged on this vehicle, please refer to Section 100-00. REFER to: (100-00)

Diagnostic Trouble Code (DTC) Index - DTC: Module Name: Central Junction Box (Description and Operation),
Diagnostic Trouble Code (DTC) Index - DTC: Module Name: Headlamp Control Module A (Description and Operation),
Diagnostic Trouble Code (DTC) Index - DTC: Module Name: Headlamp Control Module B (Description and Operation).

EXTERIOR LIGHTING

DIAGNOSIS AND TESTING

PRINCIPLE OF OPERATION

For a detailed description of the exterior lighting system and operation, refer to the relevant Description and Operation section of the workshop manual. REFER to: Exterior Lighting (417-01 Exterior Lighting, Description and Operation).

INSPECTION AND VERIFICATION

CAUTION:

Diagnosis by substitution from a donor vehicle is **NOT** acceptable. Substitution of control modules does not guarantee confirmation of a fault and may also cause additional faults in the vehicle being checked and/or the donor vehicle.

NOTE:

Check and rectify basic faults before beginning diagnostic routines involving pinpoint tests.

1. Verify the customer concern.

2. Visually inspect for obvious signs of mechanical or electrical damage.

Visual Inspection

MECHANICAL	ELECTRICAL
▪ Turn signal lamp(s) condition and installation ▪ Cornering lamp(s) condition and installation ▪ Bulbs and installation ▪ Bulb holders and installation ▪ Lighting control switch and installation ▪ Left-hand steering column multifunction switch and installation ▪ Hazard lamp switch condition and installation	▪ Fuses ▪ Wiring harness ▪ Loose or corroded connector (s) ▪ Battery Junction Box (BJB) ▪ Central Junction Box (CJB) ▪ Steering angle sensor ▪ Anti-lock Braking Control Module (ABS) ▪ Instrument Cluster (IPC) ▪ Adaptive Front Lighting System (AFS) module ▪ Restraints Control Module ▪ Controller Area Network (CAN) circuits

3. If an obvious cause for an observed or reported concern is found, correct the cause (if possible) before proceeding to the next step.

4. If the cause is not visually evident, verify the symptom and refer to the Symptom Chart, alternatively check for Diagnostic Trouble Codes (DTCs) and refer to the relevant DTC Index.

SYMPTOM CHART

SYMPTOM	POSSIBLE CAUSES	ACTION
Turn signal/hazard lamp(s) inoperative	▪ Bulb failure ▪ Fuse(s) blown ▪ Circuit fault ▪ Left-hand steering column multifunction switch fault ▪ Hazard lamp switch fault	Check the bulb and fuse condition. Check the turn signal/hazard lamp circuits. Check the left-hand steering column multifunction switch function. Check the hazard lamp switch function. Refer to the electrical guides. Check for DTCs indicating a turn signal/hazard lamp circuit fault.
Turn signal/hazard lamp(s) dim	▪ Incorrect bulb rating ▪ Circuit fault ▪ Left-hand steering column multifunction switch fault ▪ Hazard lamp switch fault	Check the bulb condition and rating. Check the turn signal/hazard lamp circuits. Check the left-hand steering column multifunction switch function. Check the hazard lamp switch function. Refer to the electrical guides.
Turn signal/hazard lamp(s) stuck on	▪ Left-hand steering column multifunction switch fault ▪ Hazard lamp switch fault ▪ Circuit fault	Check the turn signal/hazard lamp circuits. Check the left-hand steering column multifunction switch function. Check the hazard lamp switch function. Refer to the electrical guides. Check for DTCs indicating a turn signal/hazard lamp circuit fault.
Warning lamp (s) inoperative	▪ Fuse(s) blown ▪ Left-hand steering column multifunction switch inoperative ▪ Hazard lamp switch inoperative ▪ Circuit fault	Check the fuse(s). Check the left-hand steering column multifunction switch function. Check the hazard lamp switch function. Check the warning lamp circuits. Refer to the electrical guides. Check for DTCs indicating an instrument cluster or CAN system fault.

SYMPTOM	POSSIBLE CAUSES	ACTION
	▪ Instrument cluster fault	
Cornering lamp(s) inoperative	▪ Bulb failure ▪ Fuse(s) blown ▪ Circuit fault ▪ Left-hand steering column multifunction switch fault ▪ Lighting control switch fault	Check the bulb and fuse condition. Check cornering lamp circuits. Check the lighting control switch function. Check the left-hand steering column multifunction switch function. Refer to the electrical guides. Check for DTCs indicating a cornering lamp circuit fault.
Cornering lamp(s) dim	▪ Incorrect bulb rating ▪ Circuit fault ▪ Left-hand steering column multifunction switch fault ▪ Lighting control switch fault	Check the bulb condition and rating. Check the cornering lamp circuits. Check the left-hand steering column multifunction switch function. Check the lighting control switch function. Refer to the electrical guides.
Cornering lamp(s) stuck on	▪ Left-hand steering column multifunction switch fault ▪ Lighting control switch fault ▪ Circuit fault	Check the cornering lamp circuits. Check the left-hand steering column multifunction switch function. Check the lighting control switch function. Refer to the electrical guides. Check for DTCs indicating a cornering lamp circuit fault.

DTC INDEX

For a list of Diagnostic Trouble Codes (DTCs) that could be logged on this vehicle, please refer to Section 100-00. REFER to: Diagnostic

Trouble Code (DTC) Index - DTC: Module Name: Central Junction Box (100-00, Description and Operation).

2012.0 RANGE ROVER (LM), 417-01

EXTERIOR LIGHTING

DESCRIPTION AND OPERATION

EXTERIOR LIGHTING COMPONENT LOCATION

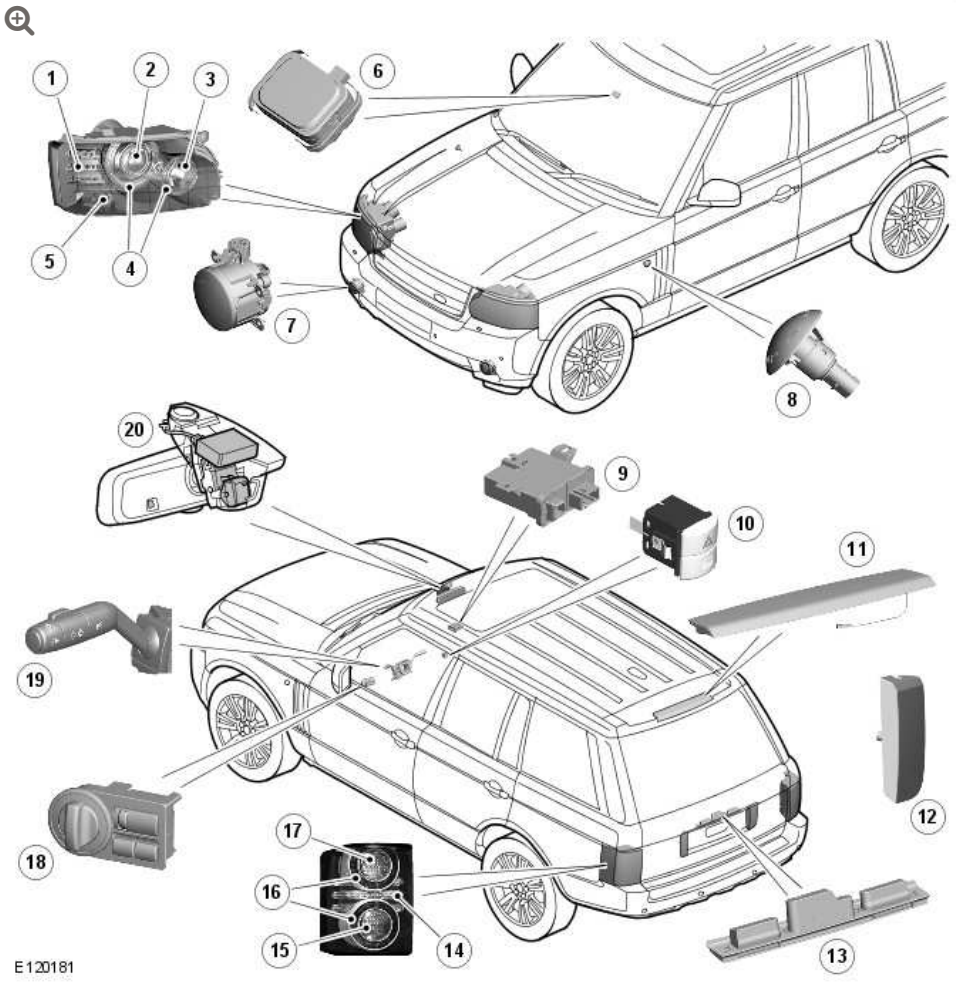

ITEM	DESCRIPTION
1	Front turn signal indicator LED's

ITEM	DESCRIPTION
2	High/low beam headlamp
3	High beam (fill in) lamp
4	Side lampsLED (light emitting diode)'s
5	Static bending/cornering lamp (if fitted)
6	Rain/light sensor
7	Front fog lamp
8	Turn signal indicator side repeater
9	Adaptive Front lighting System (AFS) control module (if fitted)
10	Hazard warning lamp switch
11	High mounted stop lamp
12	Reversing lamps
13	License plate lamps
14	Turn signal indicator
15	Fog lamp
16	Tail lamps
17	Stop lamp
18	Lighting control switch
19	Left hand steering column multifunction switch
20	Auto High Beam control module (inside mirror body)

OVERVIEW

The exterior lighting is controlled by the Central Junction Box (CJB). The CJB controls the following vehicle functions:

- Control and monitoring of exterior lamps including turn signal indicators and hazard warning functionality

- Illumination dimmer control of instrument cluster and all interior switch illumination
- Communication and control and monitoring of trailer lighting via the trailer module
- Monitoring and evaluation of check control inputs from other system control modules and output of applicable messages in the instrument cluster message center.

The CJB is connected to the medium speed Controller Area Network (CAN) bus and communicates with other vehicle systems via the instrument cluster. The CJB contains a microprocessor which performs the control, monitoring and evaluation functions.

A combined rain/light sensor is fitted which controls the automatic wiper operation and the automatic lighting function.

An Auto High Beam system can also be fitted which automatically controls the high beam headlamps.

The exterior lighting system comprises the following exterior lamps:

- Front and rear side lamps
- License plate lamps
- Side marker lamps (if fitted)
- Front and rear turn signal indicator lamps
- Turn signal indicators side repeater lamps
- Stop lamps and high mounted stop lamp
- Reversing lamps
- Rear fog lamps
- Front fog lamps
- Static bending lamps (if fitted - AFS headlamp except NAS)

- Low and high beam headlamps
- Adaptive Front lighting System (AFS) (if fitted).

EXTERIOR LAMP BULBS

The following table shows the bulbs used for the exterior lighting system and their type and specification.

Exterior Lamps Bulb Type/Rating Table

BULB	TYPE	RATING
Bi-Xenon™ headlamps - Low/High beam	Xenon D3S	35W
Headlamps - High beam 'fill-in'	Halogen H7 LL	55W
Static bending lamp (all except NAS)	2 LED's (high output)	-
Front fog lamps	Halogen H11	-
Rear fog lamps	3 LED's (high output)	-
Turn signal indicators - Front	12 LED's	-
Turn signal indicators - Rear	12 LED's	-
Turn signal indicator side repeaters	Capless WY5W	5W
Stop lamps	19 LED's	-
Tail lamps	21 LED's	-
High mounted stop lamp	20 LED's	-
License plate lamps	Festoon	5W
Reversing lamps	Bayonet H6W	6W
NAS - Side marker lamp (front/rear)	1 LED	-
Front side lamps	14 LED's	-

The bulbs and the Light Emitting Diode (LED)'s are driven by Metal Oxide Semiconductor Field Effect Transistors (MOSFETs) within the Central Electronics Module (CEM) which is an integral component of the CJB. An exception to this is the rear tail lamps, front fog lamps

and reverse lamps which are supplied with power via relays within the CJB and are protected by conventional fuses.

CENTRAL JUNCTION BOX

The CJB is located behind the glove compartment and is connected to the vehicle wiring harness with 8 multiplugs.

The CJB receives four permanent battery power supplies via the Battery Junction Box (BJB).

The lighting circuits are not all protected by conventional fuses as some are protected by Metal Oxide Semiconductor Field Effect Transistors (MOSFETs). The control circuitry within the CJB and the CJB for each individual circuit can detect and isolate a problem circuit.

Failure of a lamp is not notified to the driver. If a turn signal indicator fails the turn signal warning indicator in the instrument cluster will flash at double speed.

INPUT SIGNALS FOR LAMP CONTROL

The CJB receives inputs from the following switches:

- Lighting control switch for side lamps, headlamps and auto headlamps
- Momentary push switches for front and rear fog lamps
- Left hand steering column multifunction switch for turn signal indicators and high beam/headlamp flash and Auto High Beam system
- Brake pedal switch
- Momentary push switch for hazard warning.

The switches are supplied with a 10mA supply from the CJB and switch to ground when operated. The CJB detects that a switch has been operated (ON) when its closing resistance is less than 100 Ohm and is detected as OFF when its resistance is more than 10K Ohm.

The lighting control switch uses a binary system which is detected by the CJB which determines the selected position. The output from the lighting control switch is shown in the following table:

SWITCH STATE	SWITCH 1	SWITCH 2
Off	1	1
Side lamps	1	0
Headlamps	0	0
Auto headlamps	0	1

The CJB also receives ignition status via hard wired connections from the stop/start switch.

A reverse gear engaged signal is also received on the high speed CAN bus from the Transmission Control Module (TCM) to enable the CJB to activate the reverse lamps.

The CJB can receive a hazard warning indicator activation message from the Restraints Control Module (RCM), via the high speed CAN bus, in the event of a crash. The CJB can also activate the hazard warning indicators to signify vehicle locking to the driver.

On vehicles with Auto High Beam, the auto high beam control module outputs signals on the medium speed CAN bus to the CJB to control the high beam headlamps.

CIRCUIT PROTECTION

Operation of the lamps is performed using overload proof Metal Oxide Semiconductor Field Effect Transistors (MOSFETs). The

MOSFETs can detect overload, load interruption with the lamps switched on and short circuit to positive with the lamps switched off.

The MOSFETs are protected against short circuits, removing the requirement for the lamps circuits to be protected by fuses. The MOSFETs respond to heat generated by increased current flow caused by a short circuit. Normally this would cause the fuse to blow. The MOSFETs react to the heat increase and cut the supply to the affected circuit. Once the fault has been rectified or the MOSFET has cooled, the MOSFET will automatically reset and operate the circuit normally.

If an overload occurs, the current flow is dependant on the temperature of the related MOSFET and can be up to 20 times the rated current of the lamp. The MOSFET heats up and deactivates the load applied to the circuit. When the MOSFET cools the circuit is once again reactivated. This thermal cycling occurs continuously in the event of an overload occurring.

A number of lamps are controlled by relays and these circuits are protected by conventional fuses.

BULB MONITORING

Bulb failure monitoring is performed by the CJB processor. The lamps are cold and warm monitored by the MOSFETs in order to detect bulb failure.

NOTE:

> Relay controlled lamps have no diagnostic monitoring.

The CJB processor provides outputs to each MOSFET. The output switches the MOSFET to supply the required output to power the applicable lighting circuit. The microprocessor evaluates the circuits by detecting the returned signals from the controlling MOSFET.

When the bulb or LED is functioning normally, the output signal voltage from the controlling MOSFET is 0V. If a bulb or LED in the circuit fails, an open circuit occurs and the MOSFET outputs a signal of 5V to the processor. The signal is interpreted as a bulb or LED failure and generates a Diagnostic Trouble Code (DTC) which can be retrieved using an approved Land Rover diagnostic system.

Warm monitoring is performed continuously when the lights are switched on by evaluating the diagnostic output of the MOSFET switches. Cold monitoring is performed at 32 second intervals when the lights are switched off. The MOSFETs briefly switch on the lights for approximately 1 millisecond (this is insufficient to illuminate the bulb or LED) and checks the bulb or LED as per warm monitoring.

Cold monitoring is not possible for the low/high beam headlamps of vehicles using xenon bulbs. On these vehicles the cold monitoring of the low/high beam headlamps is switched off in the CJB. The CJB detects a failed xenon bulb via a reduction in current flow to the affected headlamp's xenon control module.

When a xenon bulb fails, the control module's current consumption falls to 60mA, which the CJB detects as unsuccessful bulb illumination.

ALARM INDICATIONS

The CJB can also display alarm visual indications for alarm arm, disarm and triggered conditions.

If the hazard warning lamps are active when a lock or unlock request is made, the hazard warning cycle is interrupted to allow the visual indication of the requested lock cycle. When visual indication is completed, the hazard warning operation will continue.

If the vehicle is involved in crash of a severity for the RCM to initiate deployment of the airbags, the control module outputs a hazard warning lamps on request on the medium speed CAN bus to the

CJB. The hazard warning lamps will be activated and will continue until the RCM outputs a message to deactivate the hazard warning lamps.

REDUNDANT DATA STORAGE

The CJB stores data relating to the Vehicle Identification Number (VIN), total mileage and service interval indicator. This data is received by the CJB from the instrument cluster and used as a back-up in the event of instrument cluster replacement.

If the CJB is to be replaced, an approved Land Rover diagnostic system must be connected to the vehicle and the CJB replacement procedure followed to ensure that the stored data is transferred to the new unit.

LOW VOLTAGE OPERATION

If the battery voltage falls below 11.2V, the CJB operates the minimum lighting to preserve the remaining battery charge.

CRASH SIGNAL ACTIVATION

In the event of an accident of a severity to activate and deploy the airbags, the Restraints Control Module (RCM) requests various electrical operations to assist with the crash situation. The RCM requests via the bus systems to the CJB to activate the hazard warning lamps.

SECURITY SYSTEM ACTIVATION

In the event of the security system being triggered, the CJB requests activation of the hazard warning lamps.

INSTRUMENT PANEL AND SWITCH ILLUMINATION DIMMING

The CJB controls the instrument cluster backlighting illumination and also illumination of all instrument panel switches.

The CJB supplies a power output to all switch illumination bulbs at a voltage determined by the position of the manual dimmer rheostat.

The switch illumination is activated when the lighting control switch is in the side lamp or headlamp position.

DIAGNOSTICS

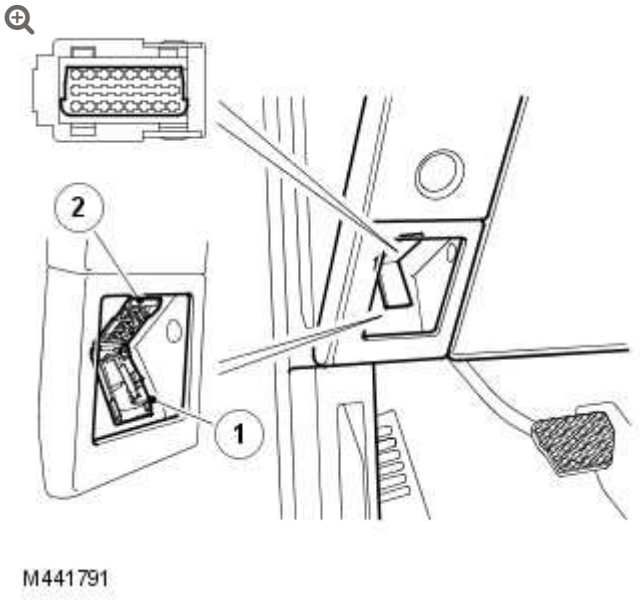

M441791

ITEM	DESCRIPTION
1	Cover
2	Diagnostic socket

The diagnostic socket allows for the transfer of information between the CJB and the approved Land Rover diagnostic system. The diagnostic socket is located in the lower instrument panel, above the pedals. The socket is secured in the instrument panel and protected by a hinged cover.

The CJB has diagnostic capabilities and stores fault codes relating to the lighting systems. The xenon control modules cannot be interrogated via the CJB.

LIGHTING CONTROL SWITCH

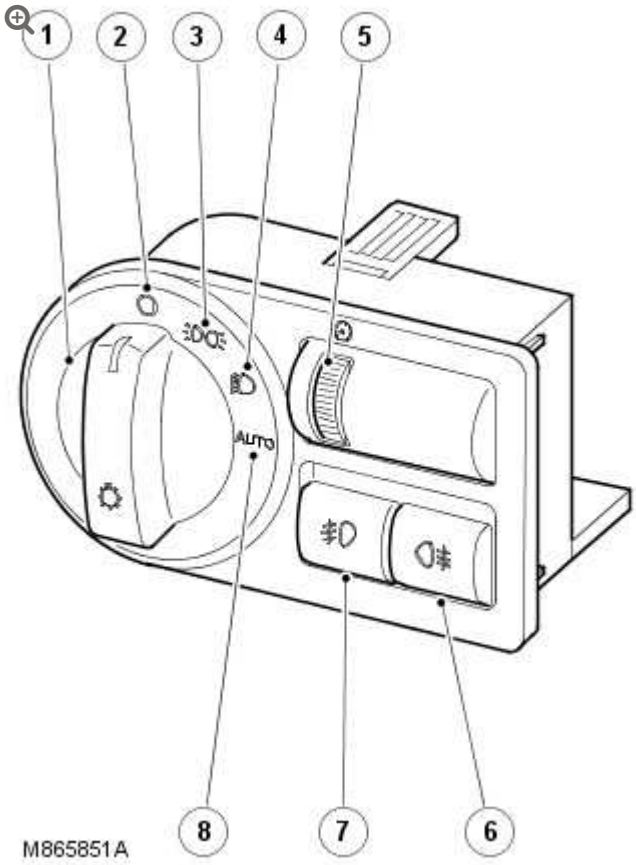

ITEM	DESCRIPTION
1	Lighting control rotary switch
2	Off position
3	Side lamps position
4	Headlamps position
5	Instrument illumination dimmer rheostat
6	Rear fog lamp switch
7	Front fog lamp switch
8	Auto position

The lighting control switch is located in the instrument panel between the steering column and the driver's door. The switch comprises a four position rotary switch for controlling side lamps and

headlamps, a thumbwheel rheostat which manually controls the instrument panel and interior switch night illumination, and momentary push switches for front and rear fog lamps.

The rotary side and headlamp control switch has 2 connections to the CJB. These 2 connections supply a hardwired binary code to the CJB which correspond to the switch position selection made.

The front and rear fog lamp switches operate by completing earth paths for a reference voltage from the CJB when the switch is pressed. The fog lamp switches are momentary, non-latching switches which briefly complete an earth path which is sensed by the CJB.

LIGHTING CONTROL SWITCH ILLUMINATION

When the stop/start switch is pressed to activate the accessory or ignition power modes, the switch legends on the lighting control switch are illuminated at maximum brightness when the lighting control switch is in the 'O' (off) position. When the lighting control switch is rotated to the side, headlamp or AUTO position the legend illumination is dimmed.

HEADLAMP ASSEMBLY

GENERAL

Two types of headlamp are available; Bi-xenon™ or Adaptive Front lighting System (AFS).

The headlamps are located on the bonnet locking platform. Each headlamp is secured at the top to the bonnet locking platform with 1 screw, 1 screw at the bottom to the front bumper support bracket, 1 screw on the fender edge bracket and 1 screw on the headlamp mounting panel. Headlamp removal is facilitated by removal of the radiator grille, front bumper and removal of the 4 headlamp attachment screws.

Headlamp removal is not required for replacement of the xenon or halogen bulbs. The rear of the headlamp unit has removable access covers which allow access to the bulbs and tourist lever.

A large cover, which is rotated counter-clockwise to remove, allows access to the low/high beam xenon bulb.

A second cover, on the inboard side of the headlamp, can be removed to allow access to the high beam 'fill-in' lamp halogen bulb. The bulb is mounted in a holder with an extended end to aid removal.

The turn signal indicators, side lamps, static bending lamp (where fitted) and the side marker lamp (where fitted) are LED's. None of the LED's are serviceable items.

In all markets except NAS, the headlamps have two adjustment screws which allow for the manual setting of the vertical and horizontal beam alignment. A 6mm Allen key is used to rotate the adjusters to achieve the required setting. The inboard adjuster controls the vertical aiming and the outboard adjuster controls the horizontal aiming.

On NAS vehicles the headlamp is regarded as 'Visual Optically Left' (VOL) aiming. There is no horizontal adjustment. Refer to the Service Repair Procedures manual for headlamp alignment data and procedures.

Each headlamp has an integral sixteen pin connector which provides inputs and outputs for the various functions of the headlamp assembly. The usage of the pins differs between model variants. Refer to the Electrical Library and circuit diagrams for pin details.

Two breathers are located on the rear of the headlamp housing. The Goretex breathers allow air flow in and out of the headlamp but prevent the ingress of moisture from rain, road spray or washing. If

condensation occurs within the headlamp, check that the breathers are not blocked with mud etc before further action is taken.

HEADLAMP OPERATION

The lamps contained within the headlamp assembly have differing functionality depending on the function selected.

The low beam headlamps are switched on when the ignition is in power mode 6 (ignition on) and:

- the lighting control switch is the headlamp position or
- the lighting control switch is in the 'AUTO' position and a 'lights on' signal is received by the CJB from the rain/light sensor.

The low beam headlamps can also be operated by the headlamp delay feature.

The high beam headlamps are switched on when the ignition is in power mode 6 (ignition on) and:

- the lighting control switch is in the headlamp position or the headlamps are activated by the AUTO feature and the left hand steering column multifunction switch is pushed forward, away from the driver or
- the headlamp flash function is operated by pulling the left hand steering column multifunction switch towards the driver or
- the auto high beam system is active.

COMMON HEADLAMP FEATURES

Turn Signal Indicators

The turn signal indicator LED's are located in 3 rows of 4 LED's in the outer part of the headlamp assembly. The LED's are not serviceable components. The LED's are controlled by an LED control module located at the rear of the headlamp assembly.

Side Lamps

The side lamp LED's are located in a circular pattern around the circumference of the both the xenon projector module (8 LED's) and the halogen high beam fill-in lamp (6 LED's). The LED's are not serviceable components. The LED's are controlled an LED control module located at the rear of the headlamp assembly.

Side Marker Lamps (NAS only)

The side marker lamp LED is located in a molded receptacle in the outer edge of the headlamp. The side marker lamp illuminates a small rectangular section between the orange side reflectors on the outside of the headlamp. The LED is not a serviceable component.

Tourist Lever

A tourist lever mechanism is located on the side of the xenon projector module. This mechanism moves a flap to blank off a portion of the beam spread to enable the vehicle to be driven in opposite drive hand markets without applying blanking decals to the headlamp lens.

The position of the tourist lever varies between headlamp variants and drive hand markets. The following lists detail the lever location and positions for home and opposite drive hand markets.

For RH side headlamps, the tourist function is operated by pushing up the lever. The delivery condition is with the tourist lever pushed down. For LH (left-hand) side headlamps , the tourist function is operated by pushing the lever down. The delivery condition is with the tourist lever pushed up.

Bi-Xenon™ / AFS Headlamps

- UK Left Hand (LH) side headlamp: tourist lever on the fender side
- UK Right Hand (RH) side headlamp: tourist lever on the grille side

- ROW LH side headlamp: tourist lever on the grille side
- ROW RH side headlamp: tourist lever on the fender side

For all xenon and AFS headlamp variants the tourist function is operated by pushing the lever down. The delivery condition is with the tourist lever pushed up.

STATIC HEADLAMP LEVELING – XENON HEADLAMPS

Static vehicle headlamp leveling is performed by the air suspension system and the air suspension control module. The suspension system constantly monitors the vehicle attitude and adjusts the height of the front and/or rear of the vehicle accordingly. This maintains the correct vehicle attitude and consequently maintains the correct headlamp beam alignment.

The vehicle leveling system is fully automatic, therefore the lighting control switch does not have a manual leveling rotary control.

XENON HEADLAMPS

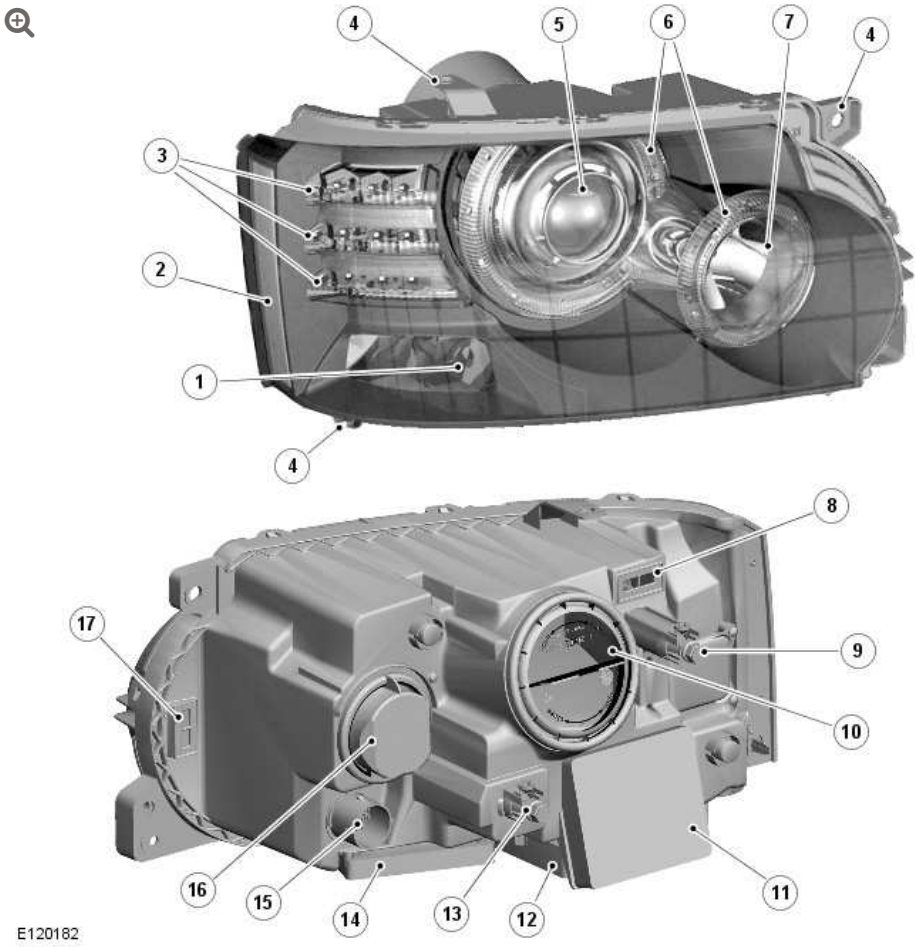

ITEM	DESCRIPTION
1	Static bending / cornering lamp LED's (where fitted)
2	Side marker lamp (NAS only)
3	Turn signal indicator LED's (12 off)
4	Headlamp mounting locations
5	Bi-xenon™ projector module
6	Side lamp LED's (14 off)
7	High beam halogen 'fill-in' lamp
8	Breather (2 off)
9	Horizontal beam adjuster
10	Cover - bi-xenon™ headlamp bulb and tourist lever
11	LED control module - side lamps and side marker lamp (NAS only)

ITEM	DESCRIPTION
12	Xenon control module
13	Vertical beam adjuster
14	LED control module - turn signal indicator and static bending lamp (if fitted)
15	Electrical connector
16	Cover - high beam 'fill-in' lamp

Safety Precautions

WARNING:

The Xenon system generates up to 28000 volts and contact with this voltage could lead to fatality. Make sure that the headlamps are switched off before working on the system.

The following safety precautions must be followed when working on the xenon headlamp system:

- **DO NOT** attempt any procedures on the xenon headlamps when the lights are switched on
- Handling of the D3S xenon bulb must be performed using suitable protective equipment, e.g. gloves and goggles. The glass part of the bulb must not be touched
- Xenon bulbs must be disposed of as hazardous waste
- Only operate the lamp in a mounted condition in the reflector.

The headlamps use a complex surface reflector for the halogen high beam 'fill-in' lamp. This type of lamp has the reflector divided into separate parabolic segments, with each segment having a different focal length. A halogen H7LL 55W bulb is retained in an extended

holder. The holder is secured in the rear of the high beam 'fill-in' lamp lens by rotating clockwise.

The xenon headlamp is known as 'Bi-Xenon™' (the Bi-Xenon™ trademark is the property of Hella KGaA Hueck & Co., Germany) because it operates as both a low and high beam unit. The xenon bulb is located in a projector module which comprises an ellipsoidal lens with a solenoid controlled shutter to change the beam output from low to high.

NOTE:

If the lighting control switch is in the 0 (off) position, the xenon lamps do not operate when the high beam 'flash' function is operated. If the lighting switch is in the headlamp position or the 'AUTO' position with the low beam headlamp active, the xenon low beam will remain on when the high beam 'flash' function is operated.

The xenon headlamp system is controlled by the CJB using a xenon control module and an igniter for each headlamp. The xenon control modules and the igniters provide the regulated power supply required to illuminate the xenon bulbs through their start-up phases of operation.

The xenon bulb is located in the rear of the projector module. The D3S xenon bulb incorporates an integral igniter unit and both components must be replaced if the bulb fails.

Xenon/Halogen Headlamp Beam Comparison

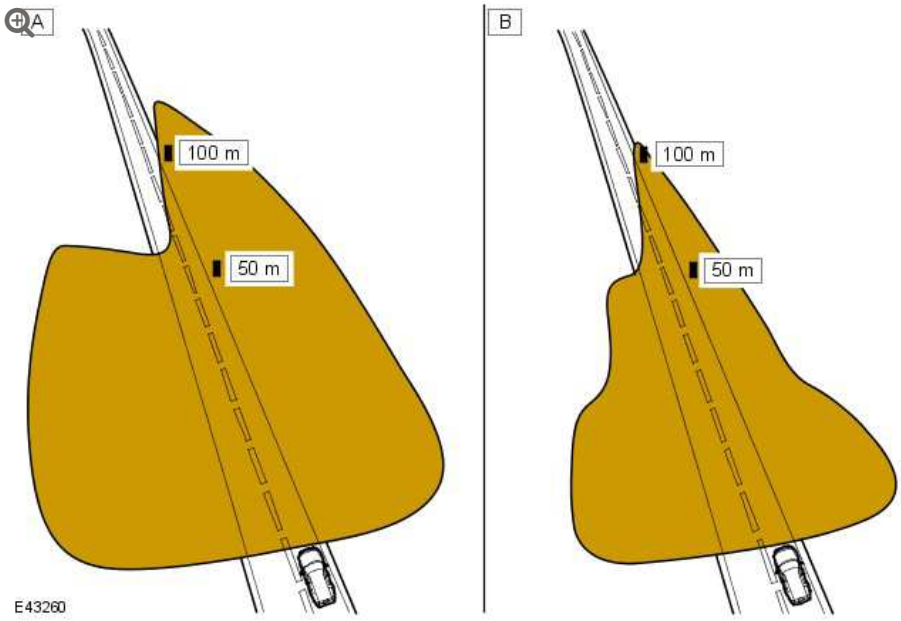

ITEM	DESCRIPTION
A	Bi-Xenon™
B	Halogen

The xenon headlamp is a self contained unit located within the headlamp assembly. The unit comprises a reflector, an adaptor ring, the lens, a shutter controller and the xenon bulb, which as an assembly is known as the projector module.

The reflector is curved and provides the mounting for the xenon bulb. The bulb locates in a keyway to ensure correct alignment in the reflector. The bulb is an integral part of the igniter and is electrically connected by a connector located in the igniter unit.

The shutter controller is a solenoid which operates the shutter mechanism via a lever. The shutter is used to change the beam projection from low beam to high beam and visa versa.

The xenon bulbs illuminate when an arc of electrical current is established between two electrodes within the bulb. The xenon gas sealed in the bulb reacts to the electrical excitation and the heat

generated by the current flow to produce the characteristic blue/white light.

To operate at full efficiency, the xenon bulb goes through three stages of operation before full output for continuous operation is achieved. The three phases are; start-up phase, warm-up phase and continuous phase.

In the start-up phase, the bulb requires an initial high voltage starting pulse of up to 30000 volts to establish the arc. This is produced by the igniter. The warm-up phase begins once the arc is established. The xenon control module regulates the supply to the bulb to 2.6A which gives a lamp output of 75W. During this phase, the xenon gas begins to illuminate brightly and the environment within the bulb stabilizes ensuring a continual current flow between the electrodes. When the warm-up phase is complete, the xenon control module changes to continuous phase. The supply voltage to the bulb is reduced and the operating power required for continual operation is reduced to 35W. The process from start-up to continuous phase is completed in a very short time.

The xenon system is controlled by the CJB, the two xenon control modules and the two igniters. The xenon control modules (one per headlamp) receive an operating voltage from the CJB when the headlamps are switched on. The modules regulate the power supply required through the phases of start-up.

The igniters (one per headlamp) generate the initial high voltage required to establish the arc. The igniters have integral coils which generate high voltage pulses required for start-up. Once the xenon bulbs are operating, the igniters provide a closed circuit for regulated power supply from the control modules.

ADAPTIVE FRONT LIGHTING SYSTEM (AFS) HEADLAMPS

The AFS headlamp is similar in its construction to the xenon headlamp described previously. The projector module is constructed

and operates as described for the xenon headlamp with the addition of the AFS system which allows the projector module to be moved vertically and horizontally by stepper motors. The following description covers the additional differences to the xenon headlamp with AFS.

The AFS is a system to improve driver visibility under differing driving conditions. AFS provides a larger visible area which is illuminated when cornering by adjusting the position of the beam distribution on the road. Horizontal adjustment is made automatically to the most suitable orientation for the driving conditions using steering angle and information from other vehicle sensors.

AFS includes the dynamic headlamp leveling system described in the 'Headlamp Leveling' section of this document. The bi-xenon™ module within the headlamp is controlled by actuator motors which rotate the projector module on its vertical and horizontal axes to adjust the beam output to suit the cornering conditions and vehicle inclination. Only the bi-xenon™ lamp projector module swivels, the halogen high beam lamp unit remains static.

The AFS is controlled by an AFS control module which is located on the instrument panel frame, behind the glove compartment. The module is connected to and controls an AFS power module located inside the headlamp housing. Signals from the AFS control module are processed by the AFS power module which powers stepper motors to adjust the vertical and horizontal alignment of the projector module. The AFS power module also controls and regulates the operation of the static bending lamp (if fitted) which is requested by the AFS control module but controlled by the CJB.

AFS Concept

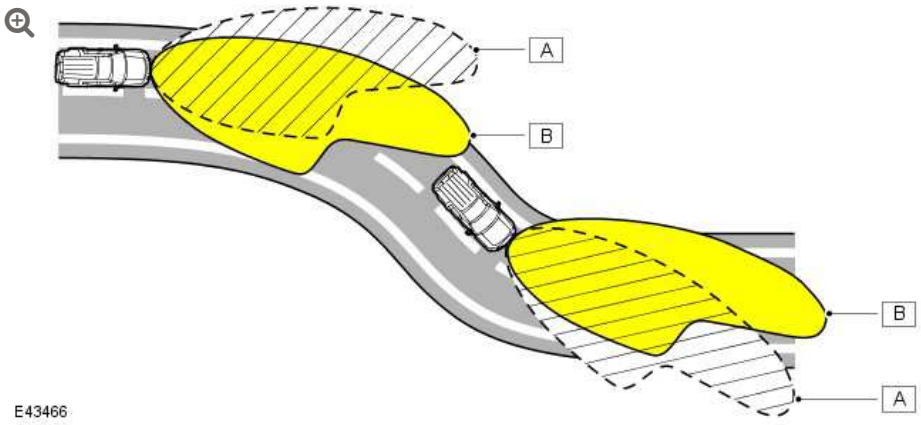

ITEM	DESCRIPTION
A	Conventional headlamp beam distribution
B	AFS headlamp beam distribution

The AFS xenon headlamp construction is similar to the non-AFS xenon headlamp assembly. The AFS headlamp has a xenon control module located on the underside of the lamp assembly. An additional AFS power module is located inside the headlamp housing. The AFS power modules supply the correct voltage to the stepper motors which control the positioning and movement of the AFS projector module.

The AFS assembly contains an additional carrier frame which provides the location for the AFS actuators. The remaining lamps are as described previously for the xenon headlamp. The AFS headlamp also incorporates a static bending/cornering lamp (except on NAS market vehicles).

The carrier frame is attached to the AFS vertical actuator. The projector module has a central pivot point which allows the module to move horizontally in response to operation of the AFS horizontal actuator.

The AFS actuators are bi-polar (2 phase) dc stepper motors which are driven by a power output from the AFS power module. Each stepper

motor receives its position information from the AFS control module via the applicable AFS power module. When the actuators are powered to their requested positions, a holding current is applied to maintain the actuator position.

The actuators do not supply a positional feedback signal to the AFS control module. Each stepper motor requires referencing each time the AFS system becomes active. When the AFS system is active, each vertical actuator is driven in the low beam position and each horizontal actuator is driven to an inboard position until a mechanical stop in the actuator is reached. Once the stop is reached a step counter in the AFS control module is set to zero and the actuator is then powered to the operating position as determined by the AFS control module software.

The AFS control module receives front and rear suspension height data and vehicle speed signals from the ABS module to adjust the projector module vertically to increase the beam range as the vehicle speed increases.

AFS CONTROL MODULE

The AFS control module is located on the instrument panel frame, behind the glove compartment.

The AFS control module is a dual functionality unit which also incorporates software to control the dynamic headlamp leveling. The AFS control module is connected to the high speed CAN bus and receives inputs from other vehicle systems on the status of the following parameters:

- Steering angle
- Vehicle speed
- Headlamp status
- Engine running

- Reverse gear selected
- Automatic lighting on.

The AFS will only operate when the AFS control module receives an engine running signal on the CAN bus. When the engine running signal is received the AFS control module performs an initialization routine.

The AFS will also function when the lighting control switch is in the AUTO position and the AFS control module receives a lights on signal from the rain/light sensor and an engine running signal.

The AFS control module then monitors the inputs from the other vehicle systems to control the AFS functionality according to cornering (steering) angles and vehicle speed.

The AFS control module is connected to each AFS power module on a private Local Interconnect Network (LIN) bus. The power modules read operating values supplied from the AFS control module and control the output drivers for the stepper motor actuators inside the headlamp assembly.

AFS OPERATION

The AFS controls the swiveling angle of each projector module using speed and steering angle signals. The angles of each projector module differ to give the correct spread of light, e.g. when turning left, the left hand projector module will have a greater swiveling angle than the right hand projector module.

INITIALIZATION PROCEDURE

When the AFS control module receives an ignition on signal, the control module performs the initialization procedure which ensures that the headlamps are correctly aligned on both their vertical and horizontal axes.

The AFS swivel initialization starts less than 1 second after the headlamp leveling initialization is activated to ensure that the headlamps are at or below the 0 degree position in the vertical axis, thus preventing glare to oncoming vehicles. The AFS swivel initialization is completed in less than 2.5 seconds. The LH and RH AFS actuator motors are powered from the 0 degree position to a small movement to the inboard position, then another small movement to the outboard position and then back to the 0 degree position.

FAILURE MODE

In the event of a failure of the AFS system, a warning indicator in the instrument cluster is illuminated to warn the driver. The AFS warning indicator illuminates when the ignition is in power mode 6 (ignition on) and will flash continuously until the fault is rectified. The AFS warning indicator will also be illuminated if a failure of the steering angle sensor or the vehicle speed signal is detected.

Illumination of the AFS warning indicator does not necessarily mean that there is a fault with the AFS system. The fault may be caused by a failure of another system preventing the AFS system operating correctly.

The AFS control module performs a diagnostic routine every time AFS is requested. If any fault is found, the AFS control module will suspend the operation of the AFS function.

If the AFS leveling system has failed with the xenon projector module in a position other than the correct straight ahead position, the AFS control module will attempt to drive the projector module to a position a small amount lower than the standard position. If the swivel function has failed, the AFS control module will lower the projector module using the leveling actuator motors to a position much lower than standard to prevent excess glare to oncoming vehicles.

The AFS control module software can detect an internal failure of the control module control circuits. The control module will power the projector modules to the zero position and prevent further operation.

Faults can be investigated by interrogating the AFS control module using the Land Rover recommended diagnostic tool to check for fault codes.

STATIC BENDING/CORNERING LAMPS

NOTE:

> The static bending/cornering lamps are not fitted to NAS vehicles with AFS headlamps

The static bending/cornering lamps, which are a standard feature on AFS headlamps, are designed to illuminate the direction of travel when cornering at low speeds. The static bending/cornering lamp functionality, which is controlled by the CJB, is unique to vehicles with AFS headlamps and operates using inputs from the steering angle sensor.

The static bending/cornering lamp LED's are incorporated into the outer part of the headlamp assembly. The design of the lens projects a spread of light from the vehicle at approximately 45 degrees to the vehicle axis.

The static bending/cornering lamp uses 2 high power LED's located in the headlamp housing. The LED's are not serviceable components.

Cornering Lamp Functionality

The cornering lamps are designed to illuminate the direction of travel when cornering at low speeds. The design of the lens projects a

spread of light from the vehicle at approximately 45 degrees to the vehicle axis.

The cornering lamps are controlled by the LH steering column multifunction switch with the lighting control switch in the headlamp position and the ignition switch in power mode 6 (ignition on). The cornering lamps are supplied power with power mode 6 to ensure that they do not function with the headlamp delay feature. The cornering lamps are deactivated if the vehicle speed exceeds 25 mph (40 km/h) at which point the static bending lamp functionality is activated.

Only one cornering lamp will illuminate at any one time. If the LH turn signal indicators are selected on, the left hand cornering lamp will be illuminated and visa versa, providing the vehicle speed and lighting control switch positions are correct.

Static Bending Lamp Functionality

The static bending lamps operate with a steering angle sensor CAN signal and vehicle speed signal which is received by the AFS control module and the CJB. The AFS control module sends a static bending lamp on request to the CJB which activates the static bending lamp LED's

When the operation parameters of the lamp are reached, the CJB illuminates the static bending lamp LED's on using a full power Pulse Width Modulation (PWM) voltage. When the lamp is switched off, the CJB fades the LED's off by decreasing the PWM voltage in a linear manner.

AUTOMATIC HEADLAMPS

The automatic headlamp function is a driver assistance system. The driver can override the system operation by selection of side lamps

or headlamps on if the ambient light conditions require front and rear lighting to be active.

The automatic headlamp system uses a rain/light sensor which is connected via the Local Interconnect Network (LIN) bus to the CJB to control the headlamp functionality. The light sensor is incorporated in the rain/light sensor located on the inside of the windshield, below the rear view mirror. The wiper system also uses the rain/light sensor for automatic wiper operation. Refer to the Wipers and Washers section for details of the rain/light sensor and automatic wiper operation. For additional information refer to Wipers and Washers 501-16.

The light sensor measures the ambient light around the vehicle in a vertical direction and also the angular light level from the front of the vehicle. The rain/light sensor uses vehicle speed signals, wiper switch position and the park position of the front wipers to control the system.

The rain/light sensor can detect if the vehicle has entered a tunnel or similar environment and will activate the headlamps on entry to the tunnel when the ambient and forward light levels have fallen quickly. When the tunnel is exited, the rain/light sensor detects the sudden increase in light levels and requests the lights to be switched off.

Certain light and weather conditions are not detected accurately by the rain/light sensor. The driver should override the automatic headlamps function if in any doubt about weather conditions and the requirement for exterior lights to be active.

The automatic headlamp operation uses ambient light levels which are monitored by a photodiode incorporated in the rain/light sensor. The rain/light sensor sends a lights on/off request to the CJB via the LIN bus, which responds by switching on the low beam headlamps, front side lamps and rear tail lamps. The automatic headlamps are activated under the following conditions:

- Twilight
- Darkness
- Rain
- Snow
- Tunnels
- Underground or multi-level car parks.

Operation of the automatic headlamps requires the ignition to be in power mode 6 (ignition on), the lighting control switch to be in the 'AUTO' position and a lights on request signal from the light sensor.

If the automatic headlamp function has been selected and the ambient light falls below a pre-defined level then the front and rear fog lamps can be manually activated. If the ambient light rises above that level then the fog lamps will be deactivated along with the rest of the lamps. If the ambient light then falls below this level again the lamps will be activated, but the fog lamps which were previously selected will not.

HIGH BEAM ASSIST

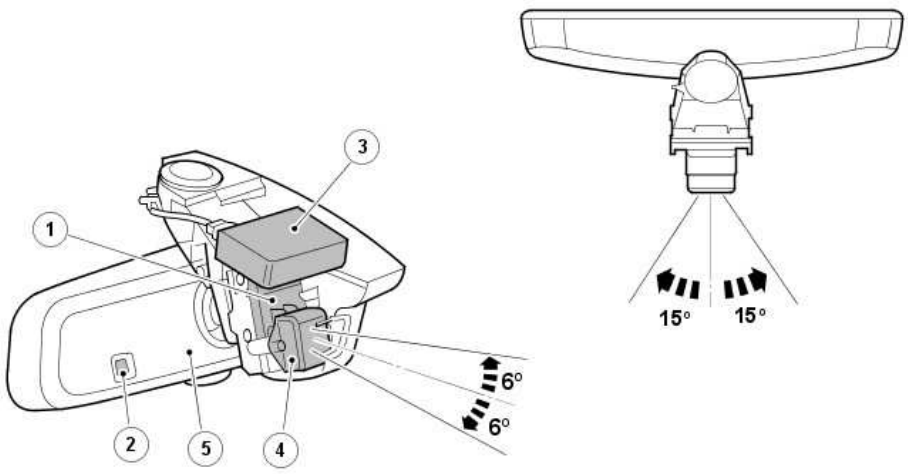

E117701

ITEM	DESCRIPTION
1	Rear view mirror calibration bracket
2	Ambient light sensor (High beam assist)
3	Rain/light sensor (Auto headlamps)
4	Image sensor
5	High beam assist control module (inside mirror body)

High beam assist is a driving aid which automatically controls the high beam function. If required, the system can be overridden by the driver.

CAUTION:

The high beam assist system is designed as a driving aid only. Should the road conditions require, it is the driver's responsibility to consider other road users and operate the high beam headlamps in a safe manner. In certain circumstances the driver will be required to intervene.

High Beam Assist Warning Indicator



ITEM	DESCRIPTION
1	Warning indicator (green)

The high beam assist system is controlled by a high beam assist control module which is located in the interior rear view mirror body and by the CJB. The module and the CJB are connected via the medium speed CAN bus.

The high beam assist control module receives a power supply from the CJB when the ignition is in power mode 6 (ignition on). The rear view mirror also includes a low resolution camera (image) sensor which detects headlamps and tail lamps of preceding vehicles. The sensor is connected to the control module which evaluates the image data, checking for light intensity and location.

If conditions are correct, the control module will activate the high beam assist by sending a high or low beam request message to the CJB via the medium speed CAN bus. The CJB then controls the shutter in the Xenon projector module together with the high beam fill-in lamp.

HIGH BEAM ASSIST OPERATION

The high beam assist operates as part of the automatic headlight system. When driving at night with the lighting control switch in the automatic position and the LH steering column multifunction switch in the central position, with sufficient darkness (approximately 1 lux or less) and a suitable road speed, the high beam assist will automatically operate the high beam lighting when necessary. A warning symbol in the instrument cluster confirms to the driver when the high beam assist system is selected and enabled.

NOTES:

- The function of the normal 'blue' high beam indicator remains unchanged and it always reflects the actual status of the high beam lamps
- The exterior lighting 'on' threshold for the auto headlamps system is approximately 100 lux which is measured by the rain/light sensor. At light levels below this value the low beam headlamps and exterior lights will be switched on. The high beam assist will not function until the light level has reached approximately 1 lux. At light levels above 1 lux high beam is not required and therefore is not activated.

Activation (system ready)

High beam assist will only activate and illuminate the warning indicator to show system is ready or 'primed' for high beam control, when the following conditions are met:

- High beam assist has been first 'enabled' via the instrument cluster menu
- Lighting control switch is in the 'Auto' position
- LH steering column multifunction switch in the central position
- The ambient light level is below 100 lux – refer to 'Light Levels' section that follows
- The system has not been overridden or cancelled – refer to 'Override' section that follows
- The camera (image) sensor view is not blocked.

High Beam Control

When activated, high beam assist will switch the headlamps to high beam when all the following conditions occur:

- No relevant oncoming traffic
- No relevant preceding traffic
- In non-urban environment, i.e. with no street lighting
- Ambient light level is below 1 lux – refer to 'Light Levels' section that follows
- Road speed is suitable – refer to 'Road Speed' section that follows.

Low Beam Control

When activated, high beam assist will switch the headlamps to low beam when any of the following conditions occur:

- Relevant Oncoming traffic is present
- Relevant Preceding traffic is present
- In urban environment, i.e. with street lighting

- Ambient light level is above 1 lux – refer to 'Light Levels' section that follows
- Road speed is not suitable – refer to 'Road Speed' section that follows
- Unrecognisable reflective inputs from road signs or markings – refer to 'System Limitations' section that follows.

Light Levels

The exterior lighting 'on' threshold for the normal 'auto headlamps' feature is approximately 100 lux and is measured by the windscreen mounted 'rain/light' sensor. When the light level falls to this value the low beam headlamps and exterior lights will be switched on together with the high beam assist warning indicator.

This warns the driver that the system is activated and ready to automatically switch on the high beam headlamps when the light level falls a little further to approximately 1 lux, as measured by the 'ambient light sensor' located in the mirror body. High beam is generally not required with light levels above 1 lux.

Road Speed

A road speed signal is received by the CJB from the Anti-lock Braking System (ABS) module via the high speed CAN bus. When the other activation conditions are correct, the CJB will switch the headlamps to high beam when the road speed has increased above 40 km/h (25 mph).

When the road speed falls to below 24 km/h (15mph), the CJB will switch the headlamps to low beam. The 10 mph (15 km/h) difference between the on and off road speed thresholds prevents the system continually switching between high and low beam at low speeds.

Override

The driver can manually override the high beam assist system at any time. When the high beam assist system is activated, pulling the LH steering column multifunction switch to the high beam 'flash' position or pushing it forward to the high beam position will de-activate the system and the high beam assist warning indicator in the instrument cluster will extinguish.

When the multifunction switch is returned to the central position, from a forward high beam position, the system is re-activated and the high beam assist warning indicator will illuminate again.

Correct Performance

In addition, high beam assist will only exhibit best performance if all of the following conditions are met:

- No false inputs are received by the camera (image) sensor, such as reflected light from certain static signs – refer to 'System Limitations' section that follows
- Headlamps are correctly aligned
- High beam assist system has been set for correct 'hand of traffic' via the driver menu settings – refer to 'Setting Hand of Traffic' section that follows
- Headlamps have been set for correct 'hand of traffic' via the mechanical tourist lever in headlamp casing – refer to 'Setting Hand of Traffic' section that follows
- Camera (image) sensor has been through a self learning 'auto aim' calibration procedure if any components have been replaced – refer to 'Calibration' section that follows
- There are no large reflective items, white papers, etc., sitting on top of the dash board in near view of the camera (image) sensor, or stickers placed directly in front of the camera (image) sensor

Driver Menu Features

The high beam assist feature must first be enabled using the configuration menu available in the instrument cluster. However if required, the high beam assist system can be permanently disabled leaving the basic 'Auto Lamps' system still operative.

Within this menu the system can also be configured for driving on the alternate side of the road (Hand of Traffic). This enables the system to be used in different regions and it's setting is important for correct operation.

Setting 'Hand of Traffic' and High Beam Assist 'Enable'

To set the high beam assist options the following steps must be sequenced:

- With the ignition in power mode 6 (ignition on), and the engine not running, use the controls on the steering wheel to select on the instrument cluster menu:
  - Menu > Vehicle Set-up > High Beam Assist
- Configure the 'Hand of Traffic' setting by selecting the appropriate 'Drive on Left' (of road) or 'Drive on Right' (of road) to the applicable Market condition
- Enable the feature by setting 'Activate Assist' if not already selected.

NOTES:

- Enabling or disabling high beam assist will not affect the ‘Hand of Traffic’ settings once set.
- The headlamps still require manual adjustment using the tourist lever for driving abroad in countries where the alternate side of the road is used.

The instrument cluster menu also includes a 'High Beam Assist Sensitivity' selection. This is a requirement option for NAS market vehicles only but it is not recommended for normal use and has been superseded.

NOTE:

In other markets the 'Sensitivity' selection is greyed out and cannot be selected.

For additional information, refer to: Instrument Cluster (413-01, Description and Operation).

System Limitations

The high beam assist system can occasionally have difficulty distinguishing between light from other vehicles or reflected light from static highly reflective road signs.

These situations may cause the high beam assist system to undesirably operate the high beam headlamps or take no action at all. Examples of these situations are as follows:

- Dips, hollows or crests in the road
- Highly reflective static Road signs
- Tight bends
- Poorly illuminated vehicles e.g. cyclists or small mopeds
- Motorway central barriers
- Extreme weather conditions e.g. Fog, heavy snow
- Exterior domestic or industrial lighting

Reflective Static Signs

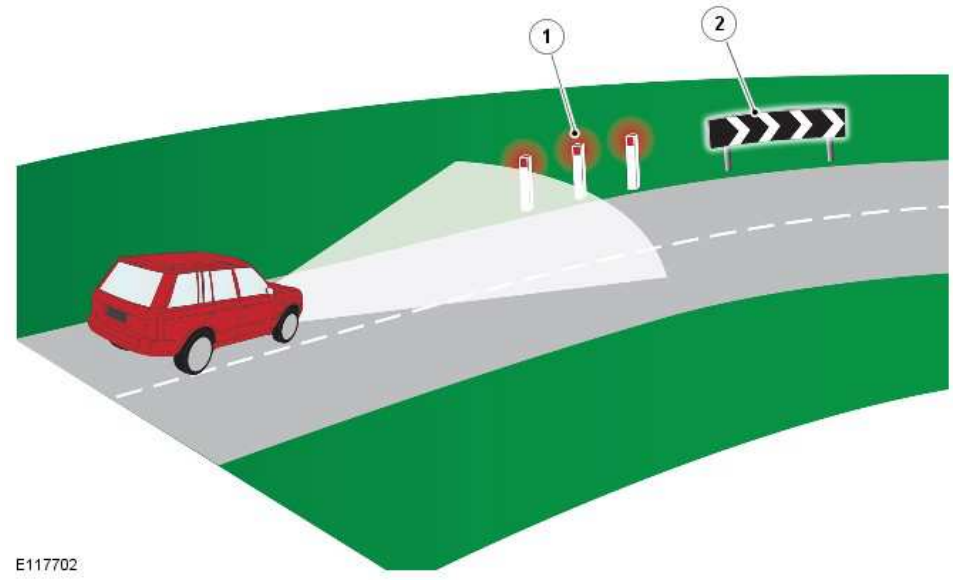

ITEM	DESCRIPTION
1	Red reflective signs could be detected as rear tail lamps
2	Large reflective signs could affect the system

Manual Deactivation

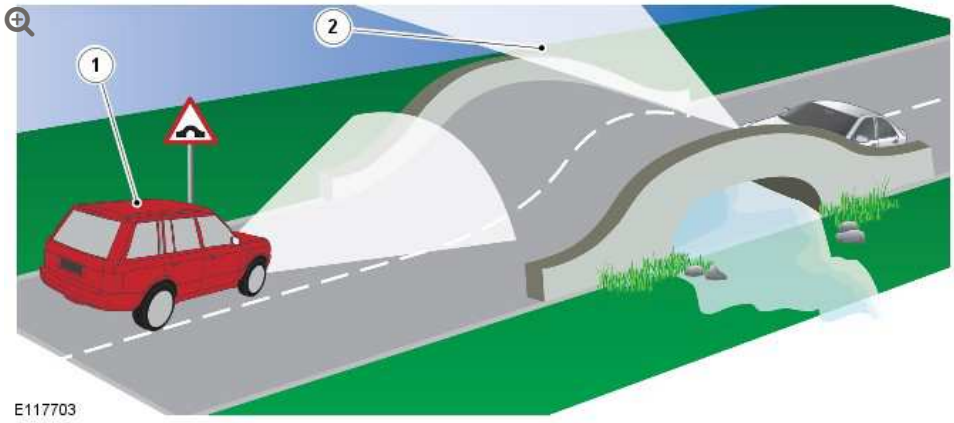

ITEM	DESCRIPTION
1	Vehicle equipped with high beam assist
2	Oncoming vehicle headlamps can be seen by the driver before the high beam assist image sensor detects the oncoming light input

There are situations when a driver is able to judge if a high beam deactivation is desirable before the high beam assist system actually operates, for example over a crest of a hill. Headlamps from an oncoming vehicle can sometimes be seen on the horizon prior to the detection sensor receiving an input. It is the driver's preference to determine if early intervention is desired in this and similar situations.

System Diagnosis

NOTE:

Windshield stickers, stone chips, dirt and general road film will affect the successful operation of the image sensor if sufficient blocking is present. Avoid placing reflective objects on the instrument panel, for example white paper which can affect the image sensor.

High beam assist has a self diagnosis capability by comparing data from the ambient light sensor input (located in the rear view mirror) to light levels detected by the image sensor. If a deviation is detected it is assumed that the ambient light available to the image sensor is being restricted by dirt or other blockage and the system will be deactivated. Diagnostic Trouble Code (DTC)'s are stored in the control module's memory and can be accessed using an approved Land Rover diagnostic system. Within the diagnostic system is a procedure to test the basic operation of the camera function.

In the event of a fault, the warning strategy to the driver is as follows:

- Image sensor internal fault - green icon will extinguish with no additional message to driver
- CJB has lost all communication with image sensor - green icon will extinguish with no additional message to driver

- Image sensor blocked - green icon will extinguish with an additional "High Beam Assist Sensor Blocked" message within the message centre

System Calibration

To achieve effective operation of the high beam assist system, a calibration routine is performed on vehicle build and system tolerances are set to an accuracy of +/- 0.2 degrees.

This initial calibration is a 'one time only' procedure. Should the high beam assist components or the windshield require replacement at the dealership, an automatic calibration routine will be performed. This 'auto aim' calibration procedure is a continual process that takes place during a normal drive cycle at night and could take between 10 - 30 minutes dependant on the following driving conditions:

- If sufficient road markings (lane markings) are visible to the image sensor - approximately 10 minutes
- If insufficient road markings are visible, the system uses the tail lights of preceding vehicles - approximately 30 minutes.

NOTES:

- Until this calibration is complete the system may not react correctly during operation. This should be made clear to the customer before vehicle handover. During any calibration or rectification work the headlamps should be checked for correct alignment.
- Due to mechanical calibration tolerance the correct mirror assembly must be used for the vehicle model types in question and it is not exchangeable with other vehicle model types.
- After any rectification work and before any calibration drives, the headlamps should be checked for correct alignment.

HEADLAMP DELAY

The CJB controls a headlamp delay function which illuminates the driveway after leaving the vehicle. The headlamp delay will operate on low beam headlamps only regardless of the position of the left hand steering column multifunction switch.

The headlamp delay is activated when the lighting control switch is in the 'Auto' position and the engine is switched off. The message center displays a 'HEADLIGHT DELAY' message and the low beam headlamps will be activated for a period of approximately 30, 60, 120 or 240 seconds, which is selectable using the instrument cluster menu. After the delay period, the CJB automatically switches off the delay function, extinguishing the headlamps.

The headlamp delay feature can also be switched off by pressing the headlamp button on the smart key.

INSTRUMENT CLUSTER WARNING INDICATOR ILLUMINATION

The warning indicators in the instrument cluster for left and right turn signal indicator, front and rear fog lamps and headlamp low and high beam and side lamps are activated by the CJB via messages to the instrument cluster on the medium and high speed CAN buses. The synchronisation of the turn signal warning indicator with the external turn signal indicator lamp frequency is controlled by a cyclic transmission of the light status on the medium speed CAN bus.

The AFS warning indicator is controlled by a signal from the AFS control module.

FRONT FOG LAMPS

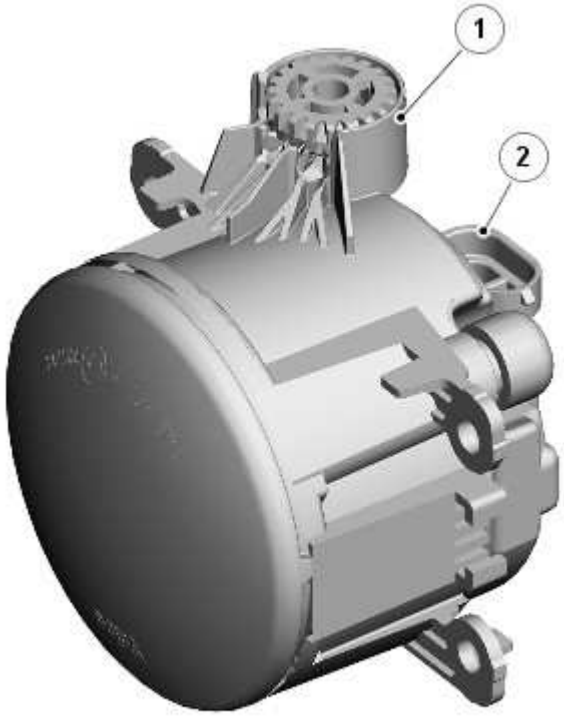

E120184

ITEM	DESCRIPTION

ITEM	DESCRIPTION
1	Lamp assembly
2	Bulb holder

The front fog lamps are located in the front bumper. Each lamp is secured to three lugs in the bumper and retained with self tapping screws and fasteners. Each lamp has an adjustment thumbwheel which provide for the vertical alignment of the beam. Access to the thumbwheel requires removal of the lamp bezel.

The 55W halogen bulb is located in a holder. The holder is secured in the lamp housing by rotating through approximately 10°. The holder has a connector to allow for connection to the electrical harness.

TAIL LAMP ASSEMBLY

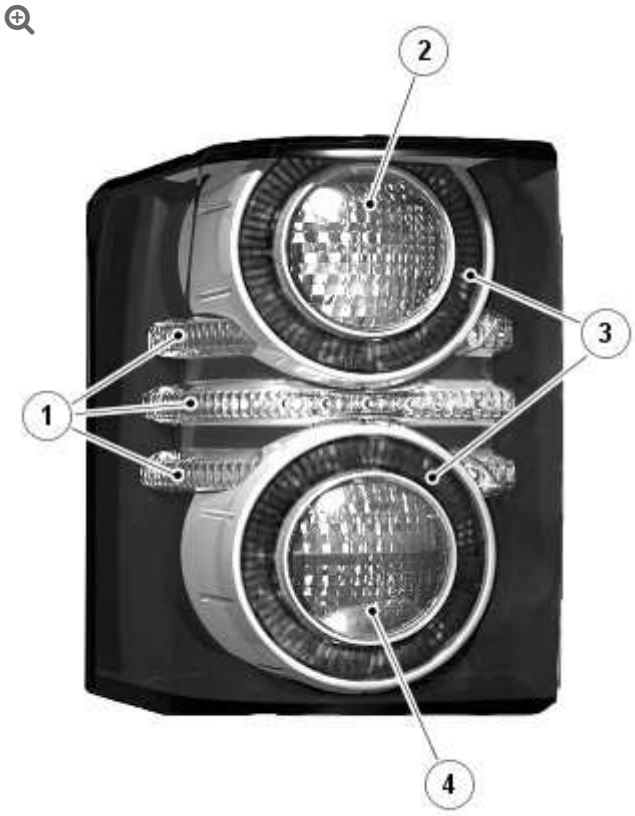

E120183

ITEM	DESCRIPTION

ITEM	DESCRIPTION
1	Turn signal indicator LED's (12 off)
2	Stop lamp LED's (19 off)
3	Tail lamp LED's (21 off)
4	Fog lamps LED's (3 off)

The rear tail and turn signal indicator lamp assemblies are located on the outer corner of each rear wing panel.

The lamp assembly is retained by two integral plastic clips which locate in corresponding clips secured to the body panel. The assembly is further retained by two self tapping screws which are accessed from inside the tailgate aperture. To remove the assembly, after removing the screws, the assembly must be prized at two indentations to release the clips. A non-metallic tool must be used with care to avoid damage to the paint finish and the lamp assembly.

All lamps in the tail lamp assembly use LED's's. The stop lamp is located in the upper section of the lamp assembly and is illuminated by 19 LED's. Surrounding the stop lamp is the upper tail lamp which is illuminated by 9 LED's. The rear fog lamp is located in the lower section of the tail lamp assembly and is illuminated by 3 high power LED's. Surrounding the fog lamp is another circular ring of 12 LED's which function as the lower tail lamp. The turn signal indicators are 3 horizontal strips located between the upper and lower tail lamps and are illuminated by 12 LED's.

On NAS vehicles, an additional LED is used to accommodate the side marker lamp. The LED lens has a vertical section which is used as the side marker illumination required for the NAS market.

None of the LED's are serviceable items.

SIDE REPEATER LAMPS

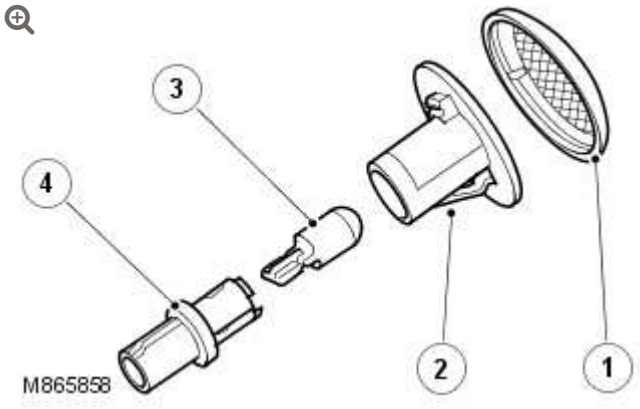

ITEM	DESCRIPTION
1	Lens
2	Lamp body
3	Bulb
4	Bulb holder

The side repeater lamps are located in the front fenders, forward of the louvered air vents. The side repeater lamps are clipped into the fender aperture and can be removed by pushing forwards and pulling outwards from the fender.

The side repeater lamps use a capless 5W bulb which is pressed into contacts in a holder. The holder is located in the lamp assembly. These lamps are not monitored by the CJB and if a failure occurs the driver will not receive a message.

REVERSING LAMPS

The reversing lamps are located in the lower tail door and positioned at either side of the license plate. The lamps are secured in the tail door with a clip at the bottom and positively secured with a screw at the top.

Each reversing lamp uses a 6W bayonet type bulb.

LICENSE PLATE LAMPS

Two license plate lamps are located in the trim above the license plate in the lower tail door. The lamps are press fitted in their apertures and secured by an integral plastic clip.

Each lamp uses a 5W festoon type bulb.

HAZARD WARNING LAMPS

The hazard warning lamps use the front and rear turn signal indicator lamps as previously described. These are controlled by the CJB in response to a hazard warning lamp request from the instrument panel switch.

CRASH SIGNAL ACTIVATION

In the event of an accident of a severity to activate and deploy the airbags, the RCM requests various electrical operations to assist with the crash situation. The RCM requests via the bus systems to the CJB to activate the hazard warning lamps. These will continue to operate until deselected using the hazard warning lamp switch in the instrument panel. The lamps flash at a frequency which is the same as the frequency used to flash the headlamp high beam in the same situation.

DAYTIME RUNNING LAMPS (DRL)

DRL operation is detailed in a separate section. For additional information refer to 417-04 Daytime Running Lamps.

LEFT HAND STEERING COLUMN MULTIFUNCTION SWITCH

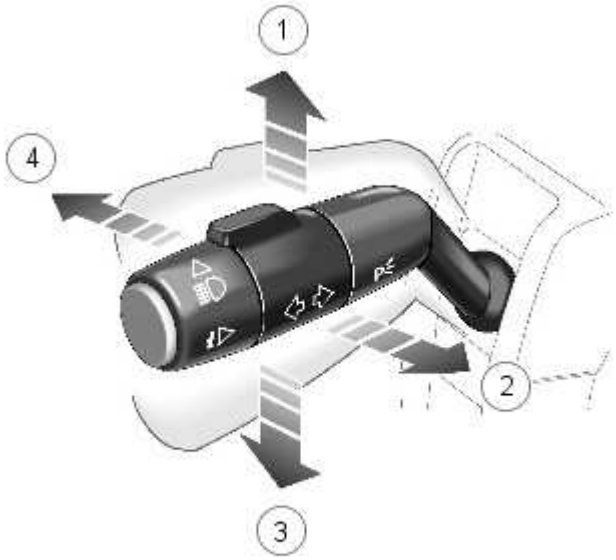

M865859

ITEM	DESCRIPTION
1	RH turn signal indicator
2	Headlamp flash
3	LH turn signal indicator
4	Headlamp high beam

The left hand steering column multifunction switch is located on the left hand side of the steering column and controls the following functions:

- Headlamp low/high beam
- Headlamp high beam flash

- Left/right turn signal indicators
- Trip computer functions. For additional information refer to 413-08 Information and Message Center.

The high beam on and flash functions are connected on a single wire to the cjb. The switch assembly contains resistors and the ground for each selection is passed through a different resistor for each selection. The same also applies to the turn signal indicators. The cjb senses the resistance on the ground wire and determines which function has been selected.

The turn signal indicators incorporate a lane change function. To activate the lane change function, hold the lever partially up or down against spring pressure to indicate a lane change. The directional indicator will flash three times. The lane change function can be enabled or disabled using an approved Land Rover diagnostic system.

EXTERIOR LIGHTING CONTROL DIAGRAM - SHEET 1 OF 2

NOTE:

A = Hardwired; **D** = Medium Speed CAN bus; **O** = LIN Bus.

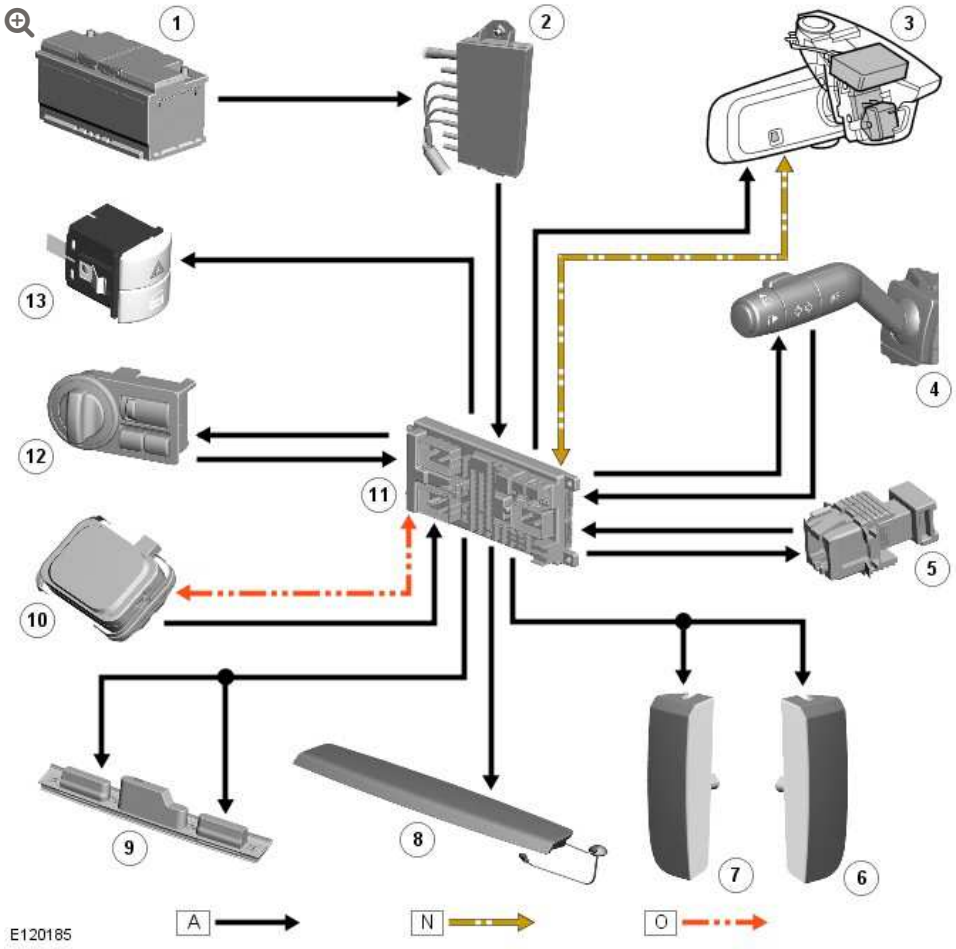

ITEM	DESCRIPTION
1	Battery
2	BJB
3	Auto high beam control module and image sensor
4	LH steering column multifunction switch
5	Brake switch
6	RH reversing lamp
7	LH reversing lamp
8	High mounted stop lamp
9	Licence plate lamps
10	Rain/light sensor
11	CJB
12	Lighting control switch

ITEM	DESCRIPTION
13	Hazard warning lamp switch

EXTERIOR LIGHTING CONTROL DIAGRAM - SHEET 2 OF 2

NOTE:

A = Hardwired; **D** = High speed CAN bus; **N** = Medium speed CAN bus

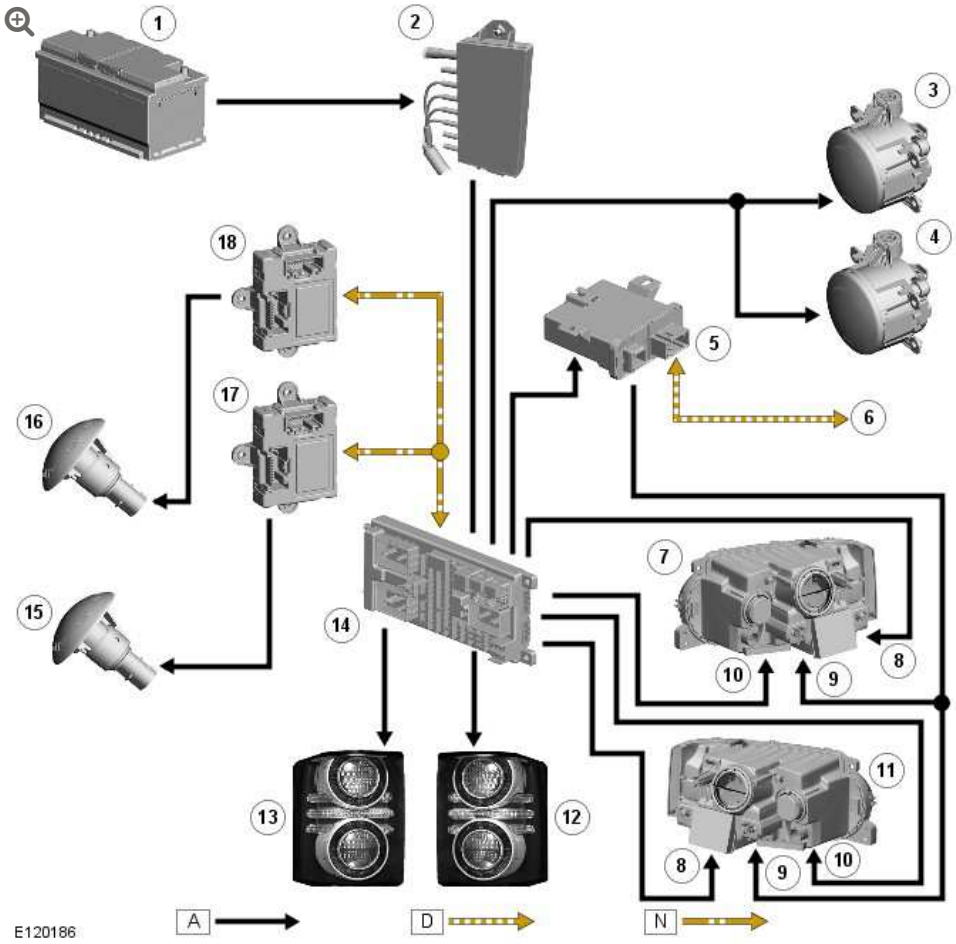

ITEM	DESCRIPTION
1	Battery
2	BJB

ITEM	DESCRIPTION
3	LH front fog lamp
4	RH front fog lamp
5	Adaptive Front lighting System (AFS) (if fitted)
6	High speed CAN bus to other systems
7	RH headlamp assembly
8	LED control module - side lamps and side marker lamps (NAS only)
9	Xenon control module
10	LED control module - Turn signal indicator and static bending lamp (if fitted)
11	LH headlamp assembly
12	RH tail lamp assembly
13	LH tail lamp assembly
14	CJB
15	RH side repeater lamp
16	LH side repeater lamp
17	RH door module
18	LH door module

AUTO HIGH BEAM CONTROL DIAGRAM

NOTE:

A = Hardwired; **D** = High Speed CAN; **N** = Medium Speed CAN; **O** = LIN Bus

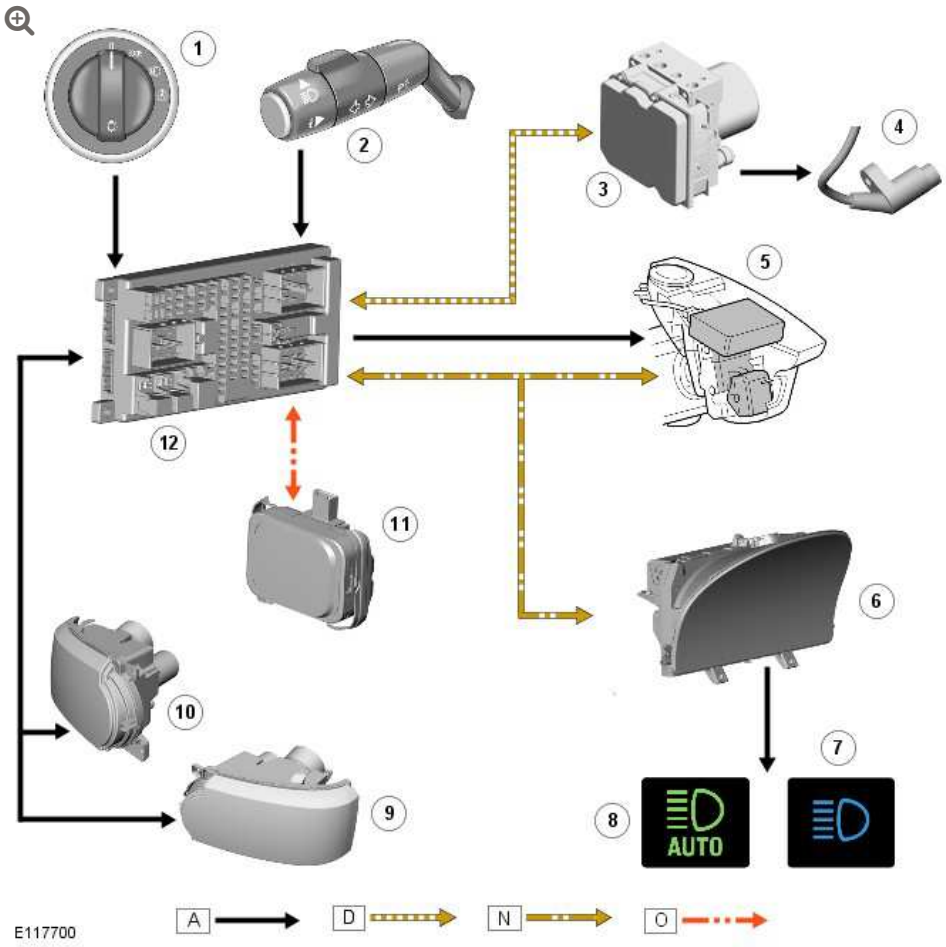

ITEM	DESCRIPTION
1	Lighting control switch
2	LH steering column multifunction switch
3	ABS control module
4	Wheel speed sensor
5	Auto high beam control module and image sensor
6	Instrument cluster
7	High beam warning indicator
8	Auto high beam warning indicator
9	LH headlamp assembly
10	RH headlamp assembly
11	Rain/light sensor
12	CJB

ITEM	DESCRIPTION

EXTERIOR LIGHTING

FRONT FOG LAMP (G1224438)

REMOVAL AND INSTALLATION

86.40.96	LAMP ASSEMBLY - FOG/DRIVING - RENEW	ALL DERIVATIVES	0.1	USED WITHINS	+

REMOVAL

NOTES:

- Removal steps in this procedure may contain installation details.
- The ignition must be switched off.

1.

CAUTIONS:

- Protect the surrounding paintwork to avoid damage.
- Take extra care not to damage the clips.

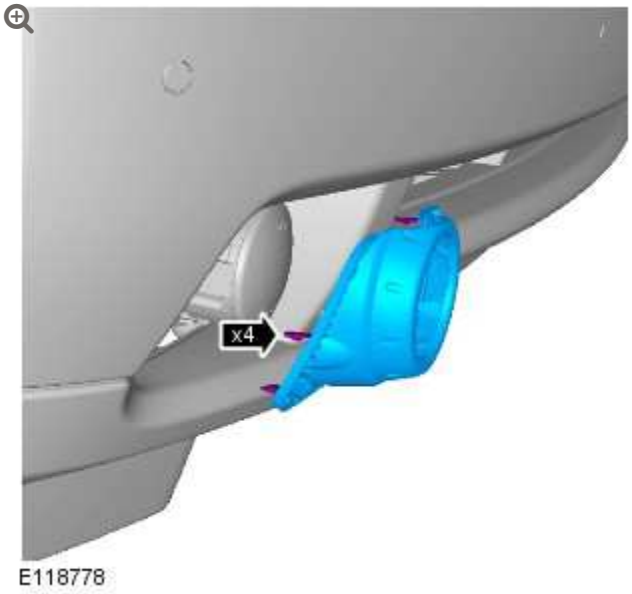

2.

NOTE:

Support as necessary.



Torque: **2.5 Nm**

3.

NOTE:

Support as necessary.

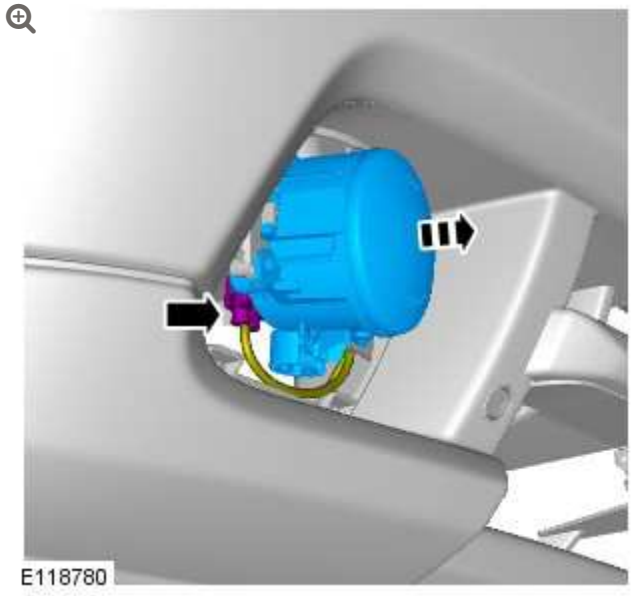

INSTALLATION

1. **NOTE:**

   The fog lamp beam should be set at 1.2% below the horizontal and parallel.

   To install, reverse the removal procedure.

EXTERIOR LIGHTING

DIAGNOSIS AND TESTING

PRINCIPLE OF OPERATION

For a detailed description of the exterior lighting system and operation, refer to the relevant Description and Operation section of the workshop manual. REFER to: Exterior Lighting (417-01 Exterior Lighting, Description and Operation).

INSPECTION AND VERIFICATION

CAUTION:

Diagnosis by substitution from a donor vehicle is **NOT** acceptable. Substitution of control modules does not guarantee confirmation of a fault and may also cause additional faults in the vehicle being checked and/or the donor vehicle.

NOTE:

Check and rectify basic faults before beginning diagnostic routines involving pinpoint tests.

1. Verify the customer concern.

2. Visually inspect for obvious signs of mechanical or electrical damage.

Visual Inspection

MECHANICAL	ELECTRICAL
▪ Front fog lamp condition and installation ▪ Bulb and installation ▪ Bulb holder and installation ▪ Adjuster screw ▪ Fog lamp switch condition and installation	▪ Fuses ▪ Wiring harness ▪ Loose or corroded connector (s) ▪ Fog lamp relay ▪ Fog lamp warning indicator ▪ Fog lamp switch ▪ Battery Junction Box (BJB) ▪ Central Junction Box (CJB)

3. If an obvious cause for an observed or reported concern is found, correct the cause (if possible) before proceeding to the next step.

4. If the cause is not visually evident, verify the symptom and refer to the Symptom Chart, alternatively check for Diagnostic Trouble Codes (DTCs) and refer to the relevant DTC Index.

SYMPTOM CHART

SYMPTOM	POSSIBLE CAUSES	ACTION
Fog lamp inoperative	▪ Bulb failure ▪ Fuse(s) blown ▪ Circuit fault	Check the bulb condition. Check the fuse(s). Check the fog lamp circuits. Check the switch function. Refer to the electrical guides.

SYMPTOM	POSSIBLE CAUSES	ACTION
	▪ Switch inoperative	
Fog lamp dim	▪ Incorrect bulb rating ▪ Circuit fault ▪ Switch fault	Check the bulb condition and rating. Check the fog lamp circuits. Check the switch function. Refer to the electrical guides.
Fog lamp lighting coverage poor	▪ Fog lamp alignment incorrect	Check and adjust fog lamp alignment.
Warning lamp inoperative	▪ Fuse(s) blown ▪ Switch inoperative ▪ Circuit fault ▪ Instrument cluster fault	Check the fuse(s). Check the switch function. Check the warning lamp circuits. Refer to the electrical guides. Check for DTCs indicating an instrument cluster fault.

DTC INDEX

For a list of Diagnostic Trouble Codes (DTCs) that could be logged on this vehicle, please refer to Section 100-00. REFER to: Diagnostic Trouble Code (DTC) Index - DTC: Module Name: Central Junction Box (100-00, Description and Operation).

EXTERIOR LIGHTING

HEADLAMP ADJUSTMENT

(G1225047)

GENERAL PROCEDURES

86.40.17	HEADLAMPS – PAIR – ALIGN BEAM	ALL DERIVATIVES	0.1	USED WITHINS	+

CHECK

NOTES:

- With self leveling suspension, make sure the vehicle is at the standard ride height.
- The headlamp setting is 1.2 % below horizontal and parallel.

1. Align the headlamp beam setting equipment to one headlamp.
2. Switch the headlamps on and to dipped beam.

ADJUSTMENT

NOTES:

- With self leveling suspension, make sure the vehicle is at the standard ride height.
- The headlamp setting is 1.2 % below horizontal and parallel.

3. 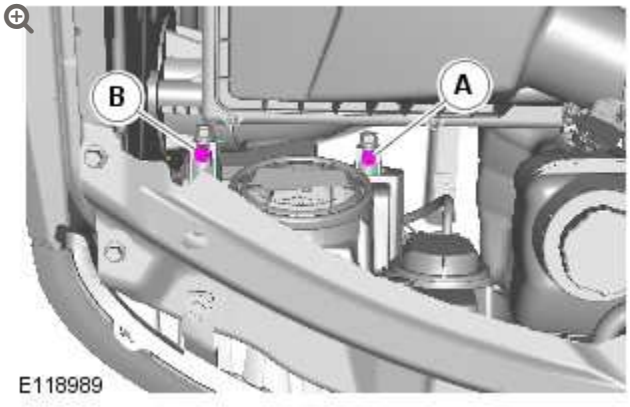

   Adjust the headlamps.

4. To adjust the second headlamp, repeat the above procedure.

EXTERIOR LIGHTING

HEADLAMP ASSEMBLY

(G1224384)

REMOVAL AND INSTALLATION

REMOVAL

WARNING:

Vehicles fitted with Xenon headlamps, the following precautions must be observed. Failure to comply may result in exposure to ultra violet rays, severe electric shock, burns or the risk of explosion. Ensure the headlamps are switched off at all times. Eye and hand protection must be worn. Never switch on the lamps or test the bulbs with the lamp holder released from the headlamp.

NOTES:

- Removal steps in this procedure may contain installation details.
- The ignition must be switched off.
- Right-hand shown, left-hand similar.

1. Disconnect the battery ground cable.
   Refer to: Specifications (414-00, Specifications).

2. Refer to: Front Bumper Cover (501-19, Removal and Installation).

3. 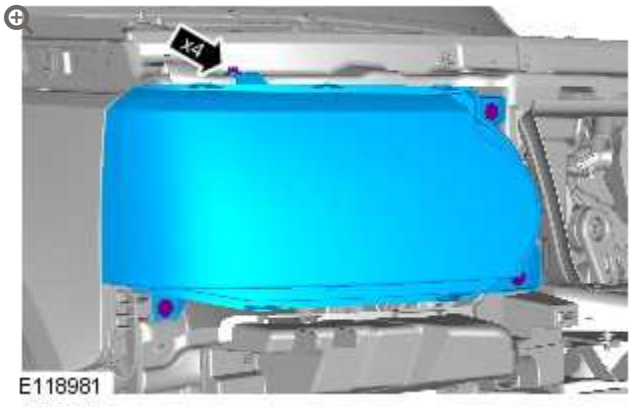

   Torque: **4 Nm**

4. 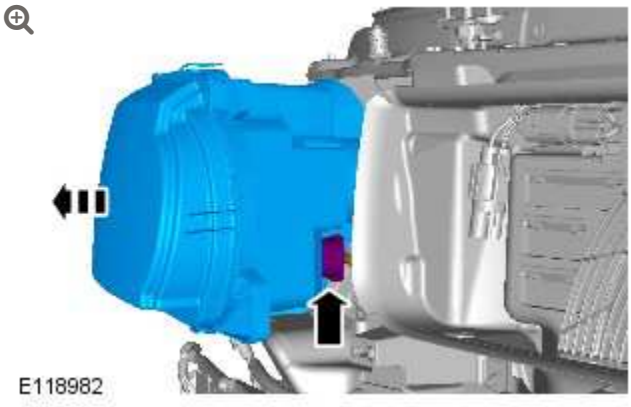

INSTALLATION

1. To install, reverse the removal procedure.

EXTERIOR LIGHTING

HEADLAMP BULB (G1235731)

REMOVAL AND INSTALLATION

REMOVAL

CAUTIONS:

- LH illustration shown, RH is similar.
- Make sure that the headlamps are not switched on with the headlamp bulb electrical connectors disconnected.

NOTES:

- The ignition must be switched off.
- Removal steps in this procedure may contain installation details.

1. Refer to: Headlamp Adjustment (417-01, General Procedures).

2.

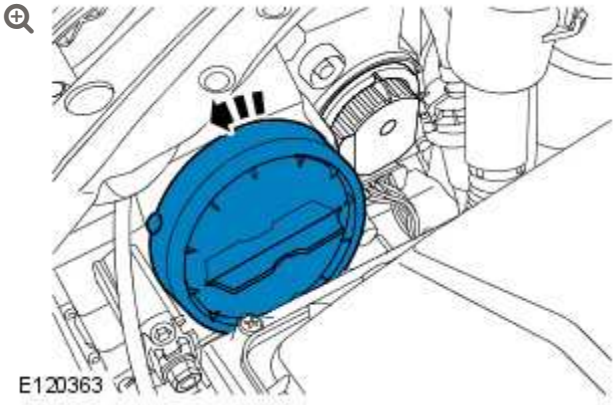

3.

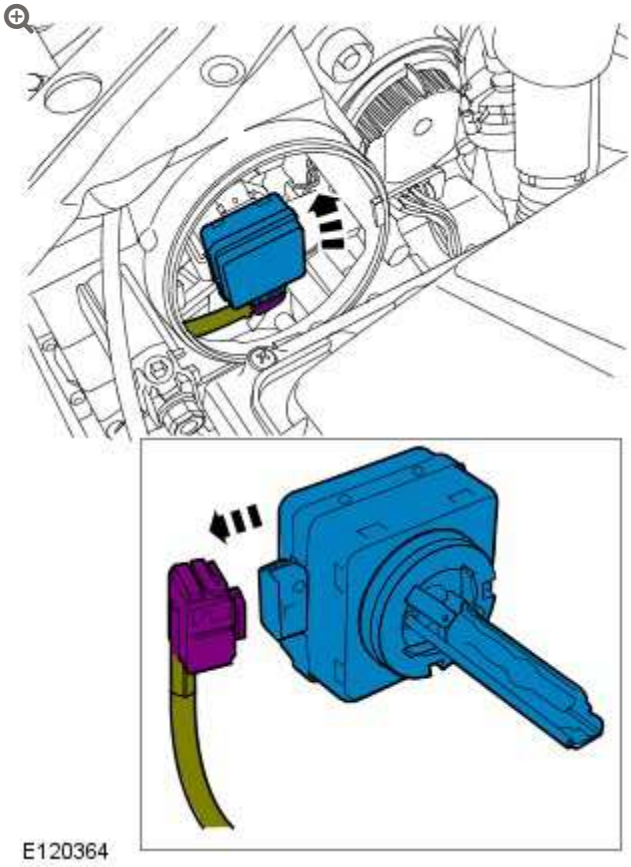

INSTALLATION

1. To install, reverse the removal procedure.

EXTERIOR LIGHTING

HEADLAMP SWITCH (G452330)

REMOVAL AND INSTALLATION

86.65.09	SWITCH - MASTER LIGHTING - RENEW	ALL DERIVATIVES	0.2	USED WITHINS	+

REMOVAL

1. Remove the driver side register trim panel.
   For additional information, refer to: Driver Side Register Trim Panel (412-01, Removal and Installation).

2. 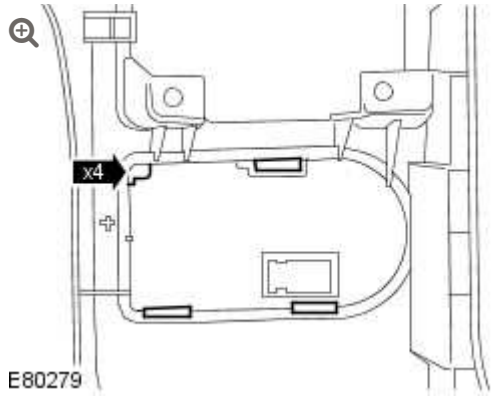

   Remove the headlamp switch.

   - Carefully release the 4 clips.

INSTALLATION

1. Install the headlamp switch.

2. Install the driver side register trim panel.
   For additional information, refer to: Driver Side Register Trim Panel (412-01, Removal and Installation).

EXTERIOR LIGHTING

HIGH MOUNTED STOPLAMP (G927822)

REMOVAL AND INSTALLATION

86.41.32	LAMP ASSEMBLY - CENTRE HIGH MOUNTED STOP - RENEW	ALL DERIVATIVES	0.3	USED WITHINS	+

REMOVAL

1. Remove the rear spoiler.

2. 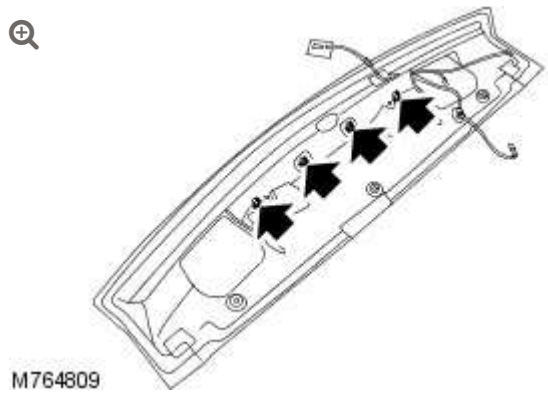

Remove the high mounted stoplamp.

- Remove the 4 screws.
- Release the wiring harness.

INSTALLATION

1. Install the high mounted stoplamp.
   - Install the screws.
   - Secure the wiring harness.
2. Install the rear spoiler.

EXTERIOR LIGHTING

DIAGNOSIS AND TESTING

PRINCIPLE OF OPERATION

For a detailed description of the exterior lighting system and operation, refer to the relevant Description and Operation section of the workshop manual. REFER to: Exterior Lighting (417-01 Exterior Lighting, Description and Operation).

INSPECTION AND VERIFICATION

CAUTION:

Diagnosis by substitution from a donor vehicle is **NOT** acceptable. Substitution of control modules does not guarantee confirmation of a fault and may also cause additional faults in the vehicle being checked and/or the donor vehicle.

NOTE:

Check and rectify basic faults before beginning diagnostic routines involving pinpoint tests.

1. Verify the customer concern.

2. Visually inspect for obvious signs of mechanical or electrical damage.

Visual Inspection

MECHANICAL	ELECTRICAL
▪ Rear lamp(s) condition and installation ▪ License lamp(s) condition and installation ▪ Bulbs and installation ▪ Bulb holders and installation ▪ Lighting control switch and installation ▪ Rain/Light sensor condition and installation	▪ Fuses ▪ Relays ▪ Wiring harness ▪ Loose or corroded connector(s) ▪ Battery Junction Box (BJB) ▪ Central Junction Box (CJB) ▪ Rain/Light sensor control module ▪ Local Interconnect Network (LIN) circuits ▪ Controller Area Network (CAN) circuits

3. If an obvious cause for an observed or reported concern is found, correct the cause (if possible) before proceeding to the next step.

4. If the cause is not visually evident, verify the symptom and refer to the Symptom Chart, alternatively check for Diagnostic Trouble Codes (DTCs) and refer to the relevant DTC Index.

SYMPTOM CHART

SYMPTOM	POSSIBLE CAUSES	ACTION
Rear/License lamp(s) inoperative	▪ Bulb failure	Check the bulb and fuse condition. Check the rear/license lamp circuits. Check the lighting control switch

SYMPTOM	POSSIBLE CAUSES	ACTION
	▪ Fuse(s) blown ▪ Circuit fault ▪ Lighting control switch fault	function. Refer to the electrical guides. Check for DTCs indicating a rear/license lamp circuit fault.
Rear/License lamp(s) dim	▪ Incorrect bulb rating ▪ Circuit fault ▪ Lighting control switch fault	Check the bulb condition and rating. Check the rear/license lamp circuits. Check the lighting control switch function. Refer to the electrical guides.
Rear/License lamp(s) stuck on	▪ Circuit fault ▪ Lighting control switch fault	Check the rear/license lamp circuits. Check the lighting control switch function. Refer to the electrical guides. Check for DTCs indicating a rear/license lamp circuit fault.
Rear/License lamp(s) inoperative when the automatic headlamp switch option is selected	▪ Fuse(s) blown ▪ Lighting control switch fault ▪ Circuit fault ▪ Rain/Light sensor fault ▪ LIN circuit fault	Check the fuse(s). Check the lighting control switch function. Check the automatic headlamp circuit. Refer to the electrical guides. Check for DTCs indicating a rain/light sensor or LIN system fault.

FRONT AND REAR LAMP CONDENSATION

Some customers may complain of condensation/mist inside exterior lamps. Condensation/mist is a natural phenomenon which can occur when there is a temperature difference between the inside and

outside of the lamp unit. This condensation is considered to be as a result of normal atmospheric conditions and replacing the light unit will not correct this symptom. With the introduction of clear lenses condensation is likely to be more noticeable but does not affect the performance of the lamp. Condensation will clear when the lights have been on for some length of time and in warmer ambient temperatures

A lamp that exhibits condensation should be evaluated after a drying time where all the functions have been operated for a minimum of 30 minutes. If the condensation has started to clear during this time it indicates that the lamp sealing has NOT been breached and will eventually clear. The lamp must NOT be replaced

CAUTION:

Make sure that bulb covers are correctly installed and make sure that all breathers (tubes or membrane patches) are free from dirt and debris and are fitted correctly as these can all lead to the formation of condensation. If any of these are determined to be the cause of the condensation, measures should be taken to dry out the lamps and to make sure that the bulb covers are installed correctly

NOTES:

- The Owner's handbook clearly states that condensation may form on the inside of lamp lenses and is caused by atmospheric conditions. That it is not detrimental to lamp performance and will clear during normal usage
- Pools of water and high levels of condensation would indicate that the lamps sealing has been compromised. Check for damage and inspect the condition of caps and breathers
- Differing layout on the opposing sides of the vehicle can lead to different levels of condensation inside the lamps from side to side. As a result of this the rate at which condensation clears may also differ from side to side
- Photographic evidence of the condensation levels prior to and after drying time should be provided with every returned part. Failure to do so may result in the claim being rejected
- This information bulletin contains examples of normal condensation generated from atmospheric conditions. A thin mist can form on the interior of clear plastic lenses, this is not detrimental to the lamp's performance. This thin mist will eventually clear through normal use, exiting through the lamp's venting system

Condensation or moisture can be more noticeable during the months of spring and autumn when there is a likelihood of a higher moisture content in the air. It can occur when there is a temperature difference on either side of the lens surface. This can often be seen in the evening and morning sunshine or when cold water makes contact with a warm lamp lens. When a lamp is warmed unevenly by the sunshine the surface area in direct sunlight will be approximately 10°

C higher than the remainder of the lamp. When warm air circulates within the lamp and makes contact with the colder surfaces moisture can appear on the lens as water condenses out of the warmer air. Condensation may occur when washing a vehicle with cold water on a warm day or when the lamps are warm and vice versa. This is the same phenomena as with the formation of dew on the surface of a glass window pane

The following illustration demonstrates the process:

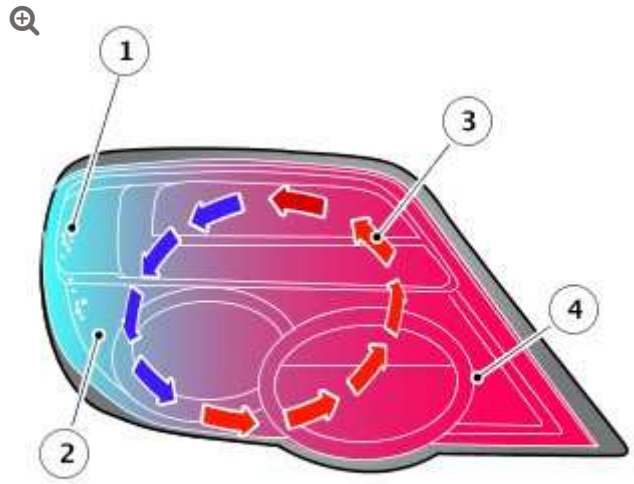

E170120

1. Moisture formation

2. Cool surfaces

3. Air circulation (convection)

4. Warm surfaces

Shown below are examples of normal exterior lamp condensation. This would NOT be covered by warranty and the lamp(s) should not be replaced

In the photographs shown below, there are no visible streaks, drip marks or droplets in the condensation mist



In the photographs shown below, the condensation mist does not obstruct the view of the lamp interior



Shown below are examples of abnormal exterior lamp condensation that may be covered by warranty. Warranty may be accepted providing the lamp does not exhibit any visible signs of external damage

In the photographs shown below, note the large water droplets

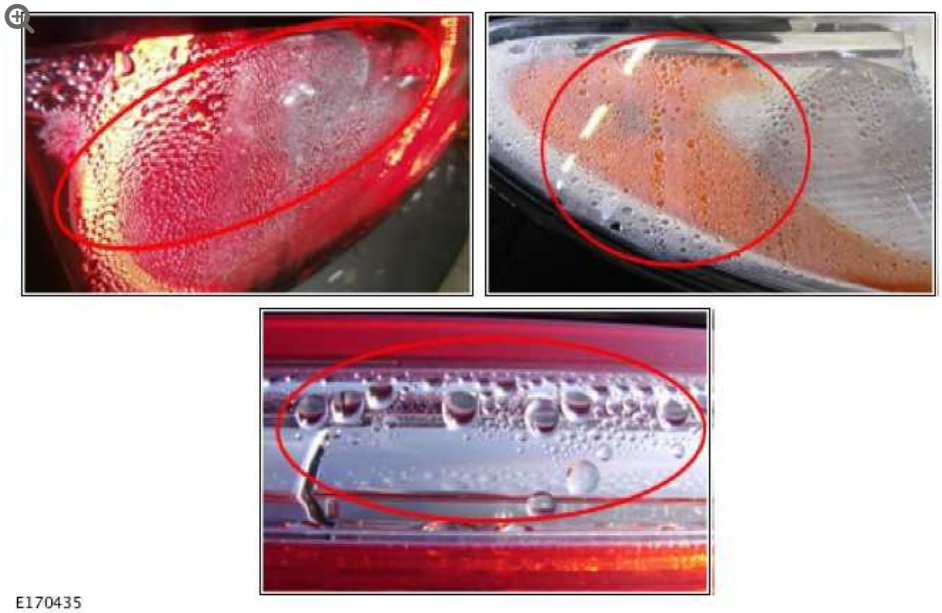

In the photographs shown below, note the drip marks or streaks in the condensation



In the photograph shown below, note the standing water within the lamp



In the photograph shown below, note the thick mist covering the lens with water droplets



DTC INDEX

For a list of Diagnostic Trouble Codes (DTCs) that could be logged on this vehicle, please refer to Section 100-00. REFER to: Diagnostic

Trouble Code (DTC) Index - DTC: Module Name: Central Junction Box (100-00 General Information, Description and Operation).

EXTERIOR LIGHTING

DIAGNOSIS AND TESTING

PRINCIPLE OF OPERATION

For a detailed description of the exterior lighting system and operation, refer to the relevant Description and Operation section of the workshop manual. REFER to: Exterior Lighting (417-01 Exterior Lighting, Description and Operation).

INSPECTION AND VERIFICATION

CAUTION:

Diagnosis by substitution from a donor vehicle is **NOT** acceptable. Substitution of control modules does not guarantee confirmation of a fault and may also cause additional faults in the vehicle being checked and/or the donor vehicle.

NOTE:

Check and rectify basic faults before beginning diagnostic routines involving pinpoint tests.

1. Verify the customer concern.

2. Visually inspect for obvious signs of mechanical or electrical damage.

Visual Inspection

MECHANICAL	ELECTRICAL
▪ Rear fog lamp condition and installation ▪ Bulb holder and installation ▪ Bulb and installation ▪ Fog lamp switch condition and installation	▪ Fuses ▪ Wiring harness ▪ Loose or corroded connector (s) ▪ Fog lamp relay ▪ Fog lamp warning indicator ▪ Fog lamp switch ▪ Battery Junction Box (BJB) ▪ Central Junction Box (CJB)

3. If an obvious cause for an observed or reported concern is found, correct the cause (if possible) before proceeding to the next step.

4. If the cause is not visually evident, verify the symptom and refer to the Symptom Chart, alternatively check for Diagnostic Trouble Codes (DTCs) and refer to the relevant DTC Index.

SYMPTOM CHART

SYMPTOM	POSSIBLE CAUSES	ACTION
Fog lamp inoperative	▪ Bulb failure ▪ Fuse(s) blown ▪ Circuit fault	Check the bulb condition. Check the fuse (s). Check the fog lamp circuits. Check the switch function. Refer to the electrical guides.

SYMPTOM	POSSIBLE CAUSES	ACTION
	▪ Switch inoperative	
Fog lamp dim	▪ Incorrect bulb rating ▪ Circuit fault ▪ Switch fault	Check the bulb condition and rating. Check the fog lamp circuits. Check the switch function. Refer to the electrical guides.
Warning lamp inoperative	▪ Fuse(s) blown ▪ Switch inoperative ▪ Circuit fault ▪ Instrument cluster fault	Check the fuse(s). Check the switch function. Check the warning lamp circuits. Refer to the electrical guides. Check for DTCs indicating an instrument cluster fault.

DTC INDEX

For a list of Diagnostic Trouble Codes (DTCs) that could be logged on this vehicle, please refer to Section 100-00. REFER to: Diagnostic Trouble Code (DTC) Index - DTC: Module Name: Central Junction Box (100-00, Description and Operation).

EXTERIOR LIGHTING

REAR LAMP ASSEMBLY

(G1224359)

REMOVAL AND INSTALLATION

86.40.70	LAMP ASSEMBLY - TAIL - LEFT/EACH - RENEW	ALL DERIVATIVES	0.1	USED WITHINS	+

REMOVAL

NOTES:

- Removal steps in this procedure may contain installation details.
- The ignition must be switched off.

1.

CAUTIONS:

- Protect the surrounding paintwork to avoid damage.
- Take extra care not to damage the clips.

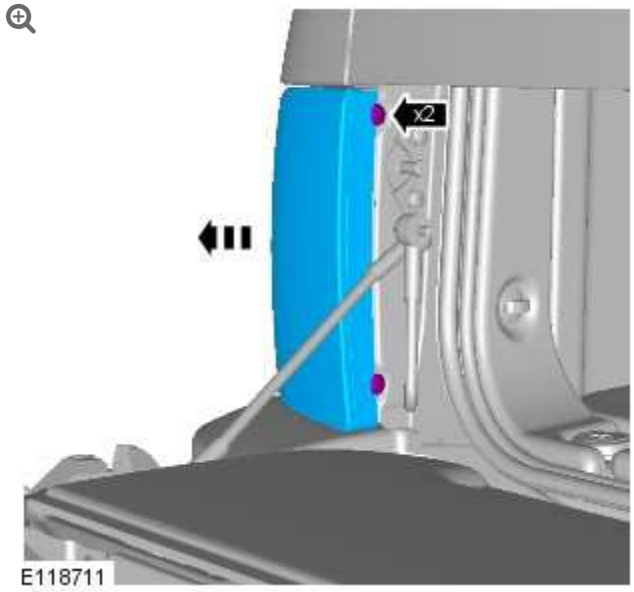

Torque: **2 Nm**

2.

CAUTION:

Take extra care not to damage the wiring harnesses.

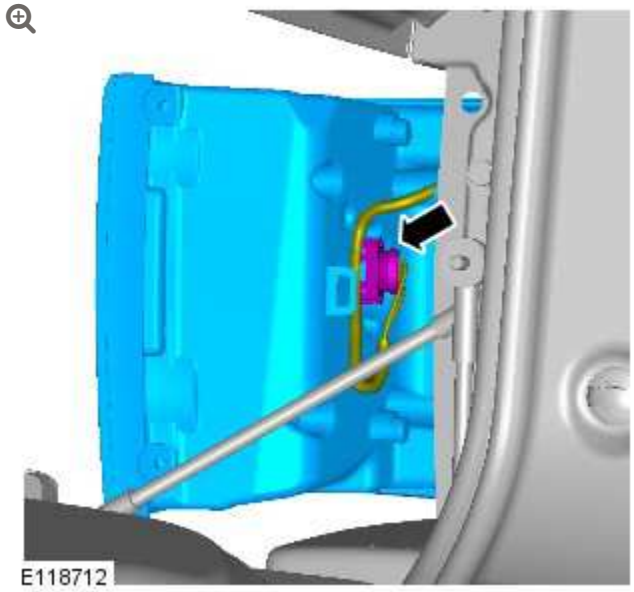

INSTALLATION

1. To install, reverse the removal procedure.

EXTERIOR LIGHTING

DIAGNOSIS AND TESTING

PRINCIPLE OF OPERATION

For a detailed description of the exterior lighting system and operation, refer to the relevant Description and Operation section of the workshop manual. REFER to: Exterior Lighting (417-01 Exterior Lighting, Description and Operation).

INSPECTION AND VERIFICATION

CAUTION:

Diagnosis by substitution from a donor vehicle is **NOT** acceptable. Substitution of control modules does not guarantee confirmation of a fault and may also cause additional faults in the vehicle being checked and/or the donor vehicle.

NOTE:

Check and rectify basic faults before beginning diagnostic routines involving pinpoint tests.

1. Verify the customer concern.

2. Visually inspect for obvious signs of mechanical or electrical damage.

Visual Inspection

MECHANICAL	ELECTRICAL
▪ Reversing lamp condition and installation ▪ Bulb and installation ▪ Bulb holder and installation	▪ Fuses ▪ Wiring harness ▪ Loose or corroded connector(s) ▪ Reversing lamp relay ▪ Battery Junction Box (BJB) ▪ Central Junction Box (CJB) ▪ Transmission Control Module (TCM) ▪ Controller Area Network (CAN) circuits

3. If an obvious cause for an observed or reported concern is found, correct the cause (if possible) before proceeding to the next step.

4. If the cause is not visually evident, verify the symptom and refer to the Symptom Chart, alternatively check for Diagnostic Trouble Codes (DTCs) and refer to the relevant DTC Index.

SYMPTOM CHART

SYMPTOM	POSSIBLE CAUSES	ACTION
Reversing lamp(s) inoperative	▪ Bulb failure ▪ Fuse(s) blown ▪ Circuit fault	Check the bulb and fuse condition. Check the reversing lamp circuits. Refer to the electrical guides. Check for DTCs indicating a reversing lamp circuit fault.

SYMPTOM	POSSIBLE CAUSES	ACTION
	▪ Missing reversing switch signal	
Reversing lamp(s) dim	▪ Incorrect bulb rating ▪ Circuit fault	Check the bulb condition and rating. Check the reversing lamp circuits. Refer to the electrical guides.

DTC INDEX

For a list of Diagnostic Trouble Codes (DTCs) that could be logged on this vehicle, please refer to Section 100-00. REFER to: Diagnostic Trouble Code (DTC) Index - DTC: Module Name: Central Junction Box (100-00, Description and Operation).

EXTERIOR LIGHTING

SIDE TURN SIGNAL LAMP

(G928177)

REMOVAL AND INSTALLATION

86.40.53	LAMP ASSEMBLY - TURN SIGNAL SIDE REPEATER - FRONT - RENEW	ALL DERIVATIVES	0.1	USED WITHINS	+

REMOVAL

1.

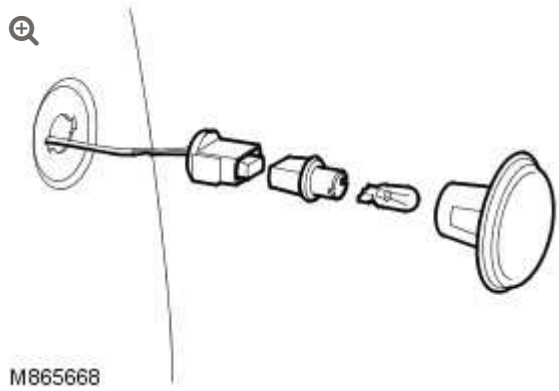

Remove the side turn signal lamp.

- Push the lamp forwards to release it from the fender.

- Disconnect the side turn signal lamp electrical connector.

2. **NOTE:**

   Do not disassemble further if the component is removed for access only.

   Remove the bulb holder.

   - Remove the bulb from the holder.

INSTALLATION

1. Install the bulb holder.
   - Install the bulb.
2. Install the side turn signal lamp.
   - Connect the side turn signal lamp electrical connector.

EXTERIOR LIGHTING

STOPLAMP SWITCH (G452331)

REMOVAL AND INSTALLATION

REMOVAL

CAUTION:

The brake pedal MUST NOT be depressed during this operation. Failure to comply will result in damage to the stoplamp switch.

1.

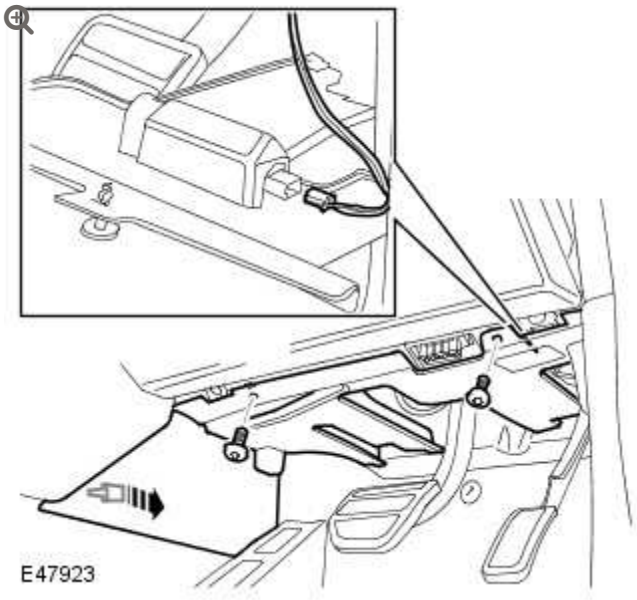

Remove the closing trim panel.

- Release the clip.
- Remove the 2 screws.
- Disconnect the electrical connector.

2. 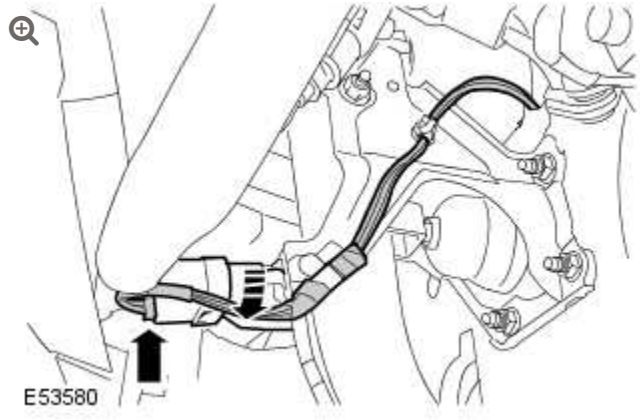

Remove the stoplamp switch.

- Disconnect the electrical connector.
- Rotate the switch clockwise.

INSTALLATION

1. **CAUTION:**

> The brake pedal MUST NOT be depressed during this operation. Failure to comply will result in damage to the stoplamp switch.

Install the stoplamp switch.

- Rotate the switch counterclockwise.
- Connect the electrical connector.

2. Install the closing trim panel.

- Connect the electrical connector.
- Secure the clip.
- Tighten the screws.

EXTERIOR LIGHTING

DIAGNOSIS AND TESTING

PRINCIPLE OF OPERATION

For a detailed description of the exterior lighting system and operation, refer to the relevant Description and Operation section of the workshop manual. REFER to: Exterior Lighting (417-01 Exterior Lighting, Description and Operation).

INSPECTION AND VERIFICATION

CAUTION:

Diagnosis by substitution from a donor vehicle is **NOT** acceptable. Substitution of control modules does not guarantee confirmation of a fault and may also cause additional faults in the vehicle being checked and/or the donor vehicle.

NOTE:

Check and rectify basic faults before beginning diagnostic routines involving pinpoint tests.

1. Verify the customer concern.

2. Visually inspect for obvious signs of mechanical or electrical damage.

Visual Inspection

MECHANICAL	ELECTRICAL
▪ Stoplamp condition and installation ▪ Bulbs and installation ▪ Bulb holders and installation ▪ Stoplamp switch condition and installation	▪ Fuses ▪ Wiring harness ▪ Loose or corroded connector(s) ▪ Hill descent relay ▪ Battery Junction Box (BJB) ▪ Central Junction Box (CJB) ▪ Anti-lock Braking Control module (ABS) ▪ Controller Area Network (CAN) circuits

3. If an obvious cause for an observed or reported concern is found, correct the cause (if possible) before proceeding to the next step.

4. If the cause is not visually evident, verify the symptom and refer to the Symptom Chart, alternatively check for Diagnostic Trouble Codes (DTCs) and refer to the relevant DTC Index.

SYMPTOM CHART

SYMPTOM	POSSIBLE CAUSES	ACTION
Stoplamp(s) inoperative	▪ Bulb failure ▪ LED lamp failure	Check the bulb, LED lamp and fuse condition. Check the stoplamp circuits. Check the stoplamp switch function. Refer

SYMPTOM	POSSIBLE CAUSES	ACTION
	▪ Fuse(s) blown ▪ Circuit fault ▪ Stoplamp switch fault	to the electrical guides. Check for DTCs indicating a stoplamp circuit fault.
Stoplamp(s) dim	▪ Incorrect bulb rating ▪ Circuit fault	Check the bulb condition and rating. Check the stoplamp circuits. Refer to the electrical guides.
Stoplamp(s) stuck on	▪ Stoplamp switch fault ▪ Circuit fault ▪ Hill descent relay circuit fault	Check the stoplamp switch function. Check the stoplamp circuits. Refer to the electrical guides. Check for DTCs indicating a stoplamp circuit fault.

DTC INDEX

For a list of Diagnostic Trouble Codes (DTCs) that could be logged on this vehicle, please refer to Section 100-00. REFER to: Diagnostic Trouble Code (DTC) Index - DTC: Module Name: Central Junction Box (100-00, Description and Operation).

EXTERIOR LIGHTING

DIAGNOSIS AND TESTING

PRINCIPLE OF OPERATION

For a detailed description of the exterior lighting system and operation, refer to the relevant Description and Operation section of the workshop manual. REFER to: Exterior Lighting (417-01 Exterior Lighting, Description and Operation).

INSPECTION AND VERIFICATION

CAUTION:

Diagnosis by substitution from a donor vehicle is **NOT** acceptable. Substitution of control modules does not guarantee confirmation of a fault and may also cause additional faults in the vehicle being checked and/or the donor vehicle.

NOTES:

- Check and rectify basic faults before beginning diagnostic routines involving pinpoint tests.
- Prior to carrying out fault diagnosis of the trailer lamp system, verify the operation of the towing vehicle lighting system with the trailer lighting plug(s) disconnected from the vehicle socket(s).

1. Verify the customer concern.

2. Visually inspect for obvious signs of mechanical or electrical damage.

Visual Inspection

MECHANICAL	ELECTRICAL
▪ Trailer lamp(s) condition and installation ▪ Bulbs and installation ▪ Bulb holders and installation ▪ Trailer socket(s), plug(s) and installation	▪ Fuses ▪ Relays ▪ Stop lamp switch ▪ Wiring harness ▪ Loose or corroded connector(s) ▪ Trailer socket(s) ground circuit(s) ▪ Battery Junction Box (BJB) ▪ Central Junction Box (CJB) ▪ Trailer fuse box ▪ Trailer relay box ▪ Instrument Cluster (IPC) ▪ Controller Area Network (CAN) circuits

3.

If an obvious cause for an observed or reported concern is found, correct the cause (if possible) before proceeding to the next step.

4. If the cause is not visually evident, verify the symptom and refer to the Symptom Chart, alternatively check for Diagnostic Trouble Codes (DTCs) and refer to the relevant DTC Index.

SYMPTOM CHART

SYMPTOM	POSSIBLE CAUSES	ACTION
Trailer brake lamp(s) inoperative	▪ Bulb failure ▪ Fuse(s) blown ▪ Circuit fault ▪ Brake lamp switch fault	Check the bulb and fuse condition. Check the trailer brake lamp circuit. Check the brake lamp switch function. Refer to the electrical guides.
Trailer brake lamp(s) dim	▪ Incorrect bulb rating ▪ Circuit fault ▪ Brake lamp switch fault	Check the bulb condition and rating. Check the trailer brake lamp circuit. Check the brake lamp switch function. Refer to the electrical guides.
Trailer brake lamp(s) stuck on	▪ Circuit fault ▪ Brake lamp switch fault	Check the trailer brake lamp circuits. Check the brake lamp switch function. Refer to the electrical guides.
Trailer fog lamp (s) inoperative	▪ Bulb failure ▪ Fuse(s) blown ▪ Circuit fault	Check the bulb and fuse condition. Check the trailer fog lamp circuit. Refer to the electrical guides.
Trailer fog lamp (s) dim	▪ Incorrect bulb rating ▪ Circuit fault	Check the bulb condition and rating. Check the trailer fog lamp circuit. Refer to the electrical guides.

SYMPTOM	POSSIBLE CAUSES	ACTION
Trailer fog lamp (s) stuck on	▪ Circuit fault	Check the trailer fog lamp circuit. Refer to the electrical guides.
Trailer tail and number plate lamp(s) inoperative	▪ Bulb failure ▪ Fuse(s) blown ▪ Circuit fault ▪ Trailer side lamp relay fault	Check the bulb and fuse condition. Check the trailer tail and number plate lamp circuit. Check the trailer tail and number plate lamp relay function. Refer to the electrical guides.
Trailer tail and number plate lamp(s) dim	▪ Incorrect bulb rating ▪ Circuit fault ▪ Trailer side lamp relay fault	Check the bulb condition and rating. Check the trailer tail and number plate lamp circuit. Check the trailer side lamp relay function. Refer to the electrical guides.
Trailer tail and number plate lamp(s) stuck on	▪ Circuit fault ▪ Trailer tail and number plate lamp relay fault	Check the trailer tail and number plate lamp circuit. Check the trailer tail and number plate lamp relay function. Refer to the electrical guides.
Trailer turn signal lamp(s) inoperative	▪ Bulb failure ▪ Fuse(s) blown ▪ Circuit fault	Check the bulb and fuse condition. Check the trailer turn signal lamp circuit. Refer to the electrical guides.
Trailer turn signal lamp(s) dim	▪ Incorrect bulb rating ▪ Circuit fault	Check the bulb condition and rating. Check the trailer turn signal lamp circuits. Refer to the electrical guides.
Trailer turn signal lamp(s) stuck on	▪ Circuit fault	Check the bulb and fuse condition. Check the trailer turn signal lamp circuit. Refer to the electrical guides.
Trailer reverse lamp(s) inoperative	▪ Bulb failure ▪ Fuse(s) blown ▪ Circuit fault ▪ Trailer reverse lamp relay fault	Check the bulb and fuse condition. Check the trailer reverse lamp circuit. Check the trailer reverse lamp relay function. Refer to the electrical guides.

SYMPTOM	POSSIBLE CAUSES	ACTION
Trailer reverse lamp(s) dim	▪ Circuit fault ▪ Trailer reverse lamp relay fault	Check the bulb condition and rating. Check the trailer reverse lamp circuit. Check the trailer reverse lamp relay function. Refer to the electrical guides.
Trailer reverse lamp(s) stuck on	▪ Circuit fault ▪ Trailer reverse lamp relay fault	Check the trailer reverse lamp circuit. Check the trailer reverse lamp relay function. Refer to the electrical guides.
Warning lamp(s) inoperative	▪ Fuse(s) blown ▪ Circuit faul ▪ Instrument cluster fault	Check the fuse(s). Check the warning lamp circuit. Refer to the electrical guides. Check for DTCs indicating an instrument cluster or CAN system fault.
Trailer socket battery feed missing	▪ Fuse(s) blown ▪ Circuit fault	Check the fuse condition. Check the trailer battery feed circuit. Refer to the electrical guides.
Trailer socket ignition feed missing	▪ Fuse(s) blown ▪ Circuit fault ▪ Trailer socket relay faulty	Check the fuse condition. Check the trailer ignition feed circuit. Check the trailer ignition feed relay operation. Refer to the electrical guides.

DTC INDEX

For a list of Diagnostic Trouble Codes (DTCs) that could be logged on this vehicle, please refer to Section 100-00. REFER to: Diagnostic Trouble Code (DTC) Index - DTC: Module Name: Central Junction Box (100-00, Description and Operation).

EXTERIOR LIGHTING

TRAILER MODULE (G927758)

REMOVAL AND INSTALLATION

REMOVAL

1. Disconnect the battery ground cable.
   For additional information, refer to: Specifications (414-00, Specifications).
   - If the trailer module is to be replaced, use the approved Land Rover diagnostic equipment and follow the on-screen instructions prior to battery disconnection.

2. Remove the access panel from the loadspace trim panel RH.

3. 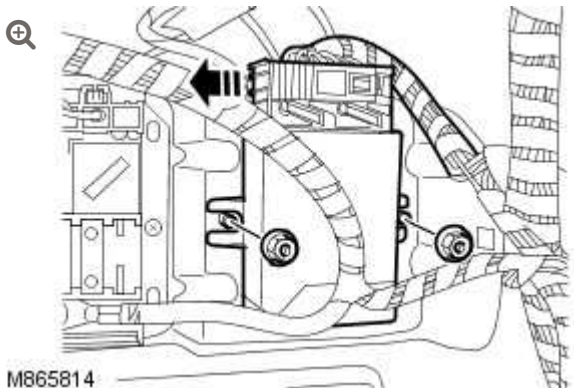

   Release the trailer module.

- Remove the 2 nuts.

4. Remove the trailer module.
   - Disconnect the electrical connector.

INSTALLATION

1. Install the trailer module.
   - Connect the electrical connector.
2. Secure the trailer module.
   - Install the nuts.
3. Install the access panel to the loadspace trim panel RH.
4. Connect the battery ground cable.
   For additional information, refer to: Specifications (414-00, Specifications).

INTERIOR LIGHTING

CENTER INTERIOR LAMP

(G916061)

REMOVAL AND INSTALLATION

REMOVAL

1.

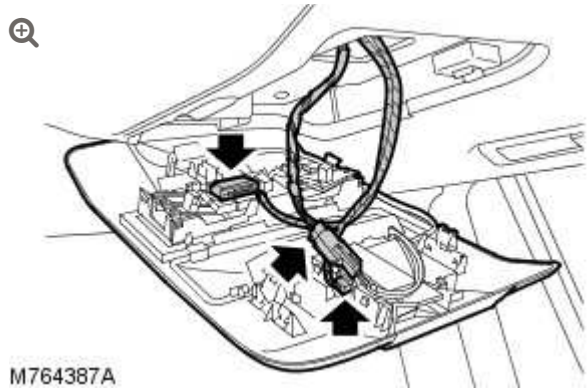

Remove the center overhead console.

- Carefully release the 3 clips.
- Disconnect the 3 electrical connectors.

2.

NOTE:

Do not disassemble further if the component is removed for access only.

Remove the intrusion sensor and module from the center overhead console.

- Release from the 2 clips.

3. Remove the center interior lamp.
   - Release the 2 clips.

INSTALLATION

1. Install the center interior lamp.
   - Secure the 2 clips.
2. Install the intrusion sensor and module to the center overhead console.
   - Secure in the 2 clips.
3. Install the center overhead console.
   - Connect the 3 electrical connectors.
   - Secure the 3 clips.

2012.0 RANGE ROVER (LM), 417-02

INTERIOR LIGHTING

DESCRIPTION AND OPERATION

INTERIOR LIGHTING COMPONENT LOCATION – RANGE ROVER ULTIMATE

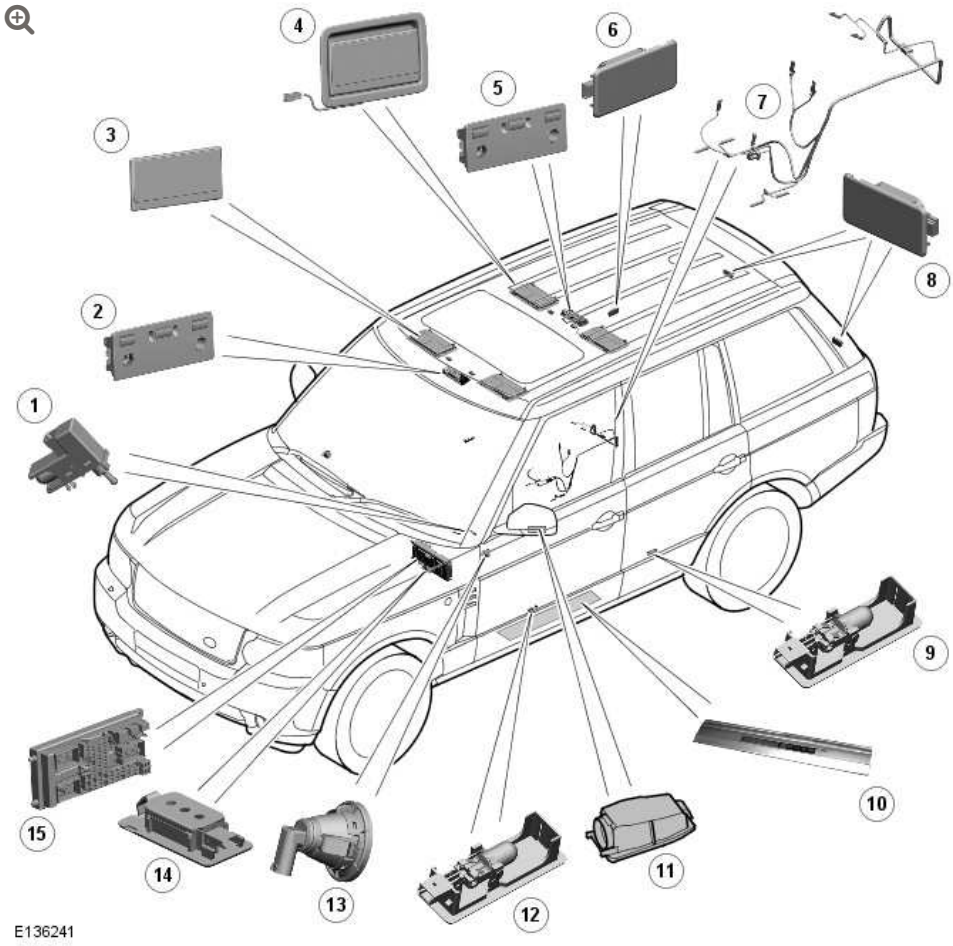

ITEM	DESCRIPTION
1	Glove compartment switch and lamp

ITEM	DESCRIPTION
2	Front interior and reading lamp
3	Front vanity mirror illumination lamps (2 off)
4	Rear vanity mirror illumination lamps (2 off)
5	Rear interior and reading lamp
6	Luggage compartment lamp
7	Rear floor console mood lighting LEDs and harness
8	Upper tail door lamps
9	Rear door puddle lamp (2 off)
10	Front door treadplate LED illumination (2 off)
11	Door mirror approach lamp (2 off)
12	Front door puddle lamp (2 off)
13	Sill lamp (2 off)
14	Footwell lamp (2 off)
15	Central Junction Box (CJB)

GENERAL

NOTE:

The LED (light emitting diode) illumination of the front door pockets and the front and rear interior door handles is a function of the CJB (central junction box) and only operates when the light control switch is in the side lamp or headlamp positions. The rear floor console mood lighting on the Range Rover Ultimate also operates on this circuit.

The interior lighting is controlled by the CJB which is located behind the glove compartment. The interior lighting comprises the following lamps:

- Front interior lamp unit
- Rear interior lamp unit
- Upper tail door load space lamps (2 off)
- Luggage compartment load space lamp
- Fascia mounted sill lamps (2 off)
- Under fascia footwell lamps (2 off)
- Door mirror approach lamps (2 off)
- Puddle lamps (4 off).

The interior lamps have two modes of operation; automatic or manual. In the automatic mode the interior lamp functionality is controlled by the CJB on receipt of various input signals. In manual mode, the lamps can be switched on and off using the momentary button adjacent to the front interior lamp or can be disabled completely using the same switch.

The Range Rover Ultimate has additional mood lighting in the rear floor console which is controlled by the Rear Entertainment Control Module (RECM). LED illuminated front treadplates are also fitted as standard on the Range Rover Ultimate and are available as an accessory fit on other models.

The following table shows the bulbs used for the interior lighting and their type and rating:

NOTE:

Some interior lighting is LED and not listed in the below table.

BULB	TYPE	RATING
Front and rear interior lamps	Capless	6W

BULB	TYPE	RATING
Front and rear map reading lamps	Capless	6W
Load space lamp	Capless	5W
Luggage compartment lamps (upper tail door)	Capless	5W
Vanity mirror lamps	Festoon	14V 0.1A (0.14W)
Door puddle lamps	Capless	5W
Fascia sill lamps	Capless	3W
Lower fascia footwell lamps	Capless	5W
Door mirror approach lamps	Capless	6W
Glove compartment lamp	Festoon	5W

FRONT AND REAR INTERIOR LAMPS AND MAP READING LAMPS

The front and rear interior lamp assemblies are similar in design. The front interior lamp switch is connected directly to the CJB and controls the manual operation of the interior lamp functionality. The rear interior lamp switch is used only to switch the lamp on and off.

The map reading lights have a non-adjustable beam and are controlled via separate switches. Both the interior and map reading lamps use capless 5W bulbs.

LUGGAGE COMPARTMENT LAMPS

The luggage compartment lamps comprise one lamp unit located on the RH (right-hand) side trim panel, adjacent to the auxiliary power socket, and two lamps located in the interior trim panel of the upper tail door. All of these lamps are of the same design and use capless 5W bulbs. The lamps are controlled by the CJB and operate on the automatic interior lamp functionality.

GLOVE COMPARTMENT LAMP

The glove compartment lamp is located inside the glove compartment, at the top, adjacent to the latch. The lamp comprises a festoon 5W bulb. The lamp housing also incorporates a plunger type switch which is activated to switch the lamp on when the glove compartment lid is opened.

VANITY MIRROR ILLUMINATION LAMPS

The vanity mirror lamps are located in the front sun visors and also in the headlining for use by the rear seat passengers. The lamps are located behind a hinged cover, either side of the mirror glass. A festoon type bulb is fitted in contacts behind each lamp lens. The lamps are activated by a simple switch which operates when the mirror cover is lifted.

FOOTWELL LAMPS

Two types of footwell lamps are fitted. Two directional sill lamps are located in the front of the fascia and illuminate the sill area. These lamps use 3W capless bulbs.

Two further footwell lamps are located in the lower fascia closing panels and illuminate the area below the fascia. These lamps use 5W capless bulbs. The lamps are controlled by the CJB and operate on the automatic interior lamp functionality.

DOOR PUDDLE LAMPS

Each of the doors is fitted with a puddle lamp to illuminate the ground below the door when the door is open. The front door puddle lamps are located in the lower face of the door, facing the

ground. The rear door puddle lamps are located in the bottom of the door trim panel.

The puddle lamps use a capless 5W bulb. The puddle lamps are controlled by the CJB and operate on the automatic interior lamp functionality.

DOOR MIRROR APPROACH LAMPS

The exterior mirror housings are fitted with a lamp which illuminates the area below the front door. The approach lamps comprise a housing located inside the mirror and bulb holder with harness connector. The housing contains a plastic lens which directs a beam of light in the required area. The approach lamps use a capless 6W bulb.

The lamps are controlled by the CJB, via the front driver and passenger door modules. The CJB sends a CAN (controller area network) message to the door module to illuminate the approach lamps when an unlock signal, a front door open signal or an ignition off mode is detected.

REAR FLOOR CONSOLE MOOD LIGHTING – RANGE ROVER ULTIMATE

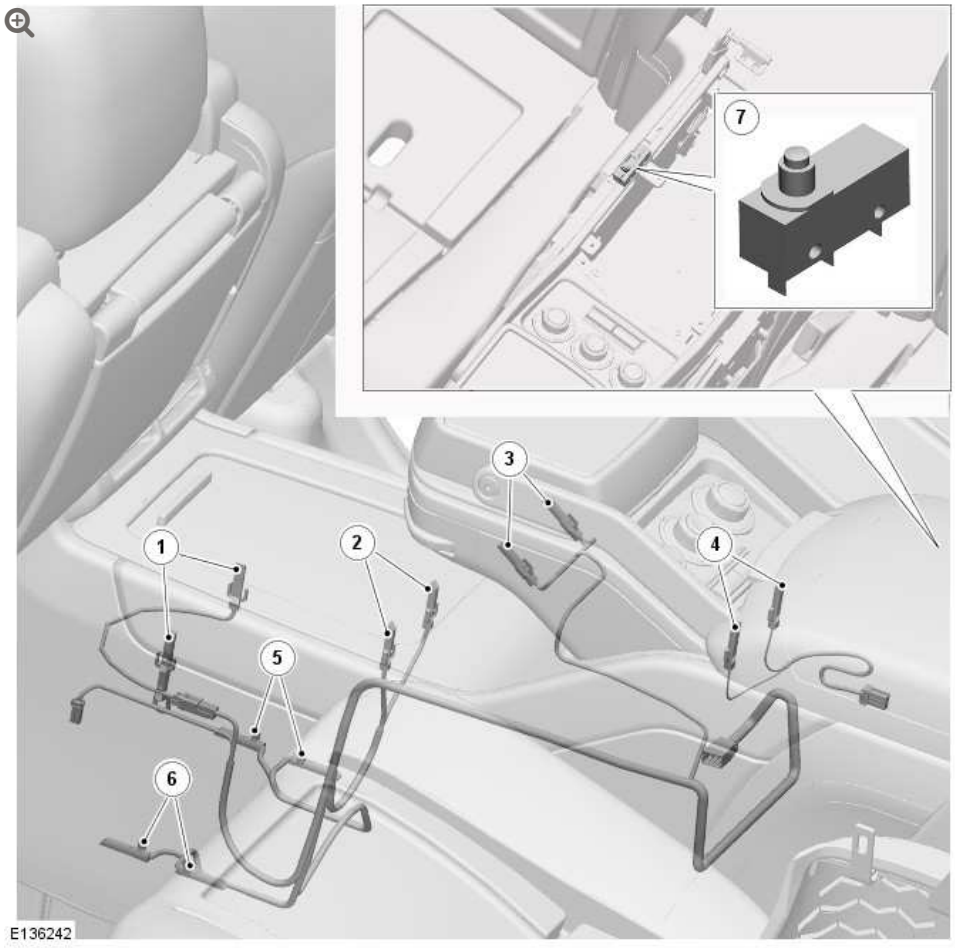

ITEM	DESCRIPTION
1	Bottle chiller illumination LEDs
2	Glass receptacle LEDs
3	Mood lighting LEDs
4	Rear stowage box LEDs
5	Right Hand (RH) side mood lighting floor illumination LEDs
6	Left Hand (LH) side mood lighting floor illumination LEDs
7	Stowage box lid microswitch

The rear mood lighting in the Range Rover Ultimate comprises 12 LEDs which illuminate the chiller unit, the rear stowage box and the console and rear floor areas.

Two LEDs are used to illuminate the interior of the rear stowage box. With the exception of the rear stowage box, allLEDs are active at all times when the lighting control switch is in the side lamp or headlamp positions or in the AUTO position and the exterior lamps are active. The LEDs in the rear stowage box are operated by a simple microswitch which is operated by the stowage box lid. When the lid is closed, the LEDs are off.

Four LEDs are used in the chiller unit. Two LEDs illuminate a ring around the bottle chiller unit and two further LEDs illuminate the tubes for the glasses.

Two LEDs are located below the table rotating mechanism and illuminate the area of the sliding cover for the chiller unit.

Four LEDs are located at the base of the floor console and illuminate the rear footwell area on both the LH (left-hand) and RH side of the console.

The mood lighting, with the exception of the two rear stowage box LEDs, are controlled by the Rear Entertainment Control Module (RECM). The RECM receives a PWM (pulse width modulation) input from the instrument panel illumination circuit. The PWM duty-cycle is dependant on the position of the instrument panel illumination dimmer rheostat. The RECM monitors the PWM input and produces a PWM ground connection to the rear floor console mood lighting LEDs.

The PWM input to the RECM is derived from a connection into the rear climate control panel connector.

DIAGNOSTICS

Diagnostics for the interior lamps is limited to a check of the function of the front interior lamp switch. The CJB can be interrogated using Land Rover approved diagnostic equipment to establish the correct operation of the front interior lamp switch, the door switches and the tail door switches.

OPERATION

The interior lamp operation is activated by any of the following input signals:

- Door switch contacts (front and rear)
- Ignition switch position I (Aux)
- Central locking, lock request
- Central locking remote handset operation
- Crash sensor
- Front interior lamp switch.

The load space lamp and the upper tail door lamps are not switched on with the interior lamps. These lamps are only activated when the upper tail door is opened. When the upper tail door is opened, the interior lamps, in addition to the load space lamps, are switched on and are subject to the CJB timers.

AUTOMATIC OPERATION

The automatic control of the interior lamps has several switch on and off conditions as follows:

- The interior lamps are switched on when one or more doors are opened. When all the doors are closed, the interior lamps are

switched off after a delay of 20 seconds. If the vehicle is locked after closing the doors, within the 20 second period, the lamps go off immediately.

- When the interior lamps are on and the ignition is moved to positions I or II, the lamps go off immediately after all doors have been closed.
- When the ignition switch is moved to the off position, the interior lamps are switched on for 20 seconds. This timer is overridden if a door is subsequently opened.
- When the vehicle is unlocked and the doors are closed, the interior lamps can be activated for a further 20 second period by pressing the 'unlock' button on the remote handset.
- When the vehicle is unlocked from a locked condition, the interior lamps are activated for a 20 second period. This timer is overridden if a door is subsequently opened.
- If a door is left open, the interior lamps will remain on for 16 minutes. After this period, the CJB timer switches the interior lamps off to prevent excessive battery drain.

The CJB uses a PWM operation of the interior lamps for the on/off conditions. The lamps are switched on with a 'soft ramp' of 1.3 seconds. The lamps are switched off with a 'soft ramp' of 2.6 seconds. The soft on/off operation is controlled by a semiconductor within the CJB

MANUAL OPERATION

The interior lamps can be switched on or off using the manual switch for the front interior lamp. The front interior lamp switch will switch all interior lamps, front and rear, on or off. If the interior lamps are on when the switch is pressed, all interior lamps will go off. The on and off automatic switching conditions remain effective even when the manual switch is used.

If the ignition switch is in position I or II and the front interior lamp switch is used to switch the interior lamps on, the lamps will remain on continuously whilst the ignition is in position I or II. If the ignition switch is moved to the off position, the interior lamps will be subject to the 16 minute CJB timer. The interior lamp is immediately switched off when the vehicle is locked. After a locking procedure, the interior lamp automatic control is reinstated.

The rear interior lamp switch will switch the rear interior lamp only on or off.

CONTINUOUS OFF

To prevent drain on the battery if the doors are to remain open for some time, the interior lamps can be turned off permanently. This is stored in the CJB EEPROM and is also activated following a system power down or a reset of the CJB

To enter the continuous off condition, the front interior lamp switch must be pressed and held for more than 3 seconds. The continuous off function can only be disabled by pressing the front interior lamp switch, after which, full automatic control is resumed. When continuous off is active, the rear interior lamp switch can still be used to switch the rear interior lamp only on or off.

CRASH SIGNAL OPERATION

The CJB receives a crash signal on a hardwired connection from the RCM (restraints control module) in the event of a crash of a severity to activate the airbags. On receipt of this signal, the CJB activates the interior lamps which are on permanently and not subject to the CJB timer.

The crash operation of the interior lamps can only be cancelled by operating the manual switch on the front interior lamp or by locking and unlocking the vehicle.

INTERIOR LIGHTING CONTROL DIAGRAM

NOTE:

A = Hardwired; **N** = Medium speed CAN bus

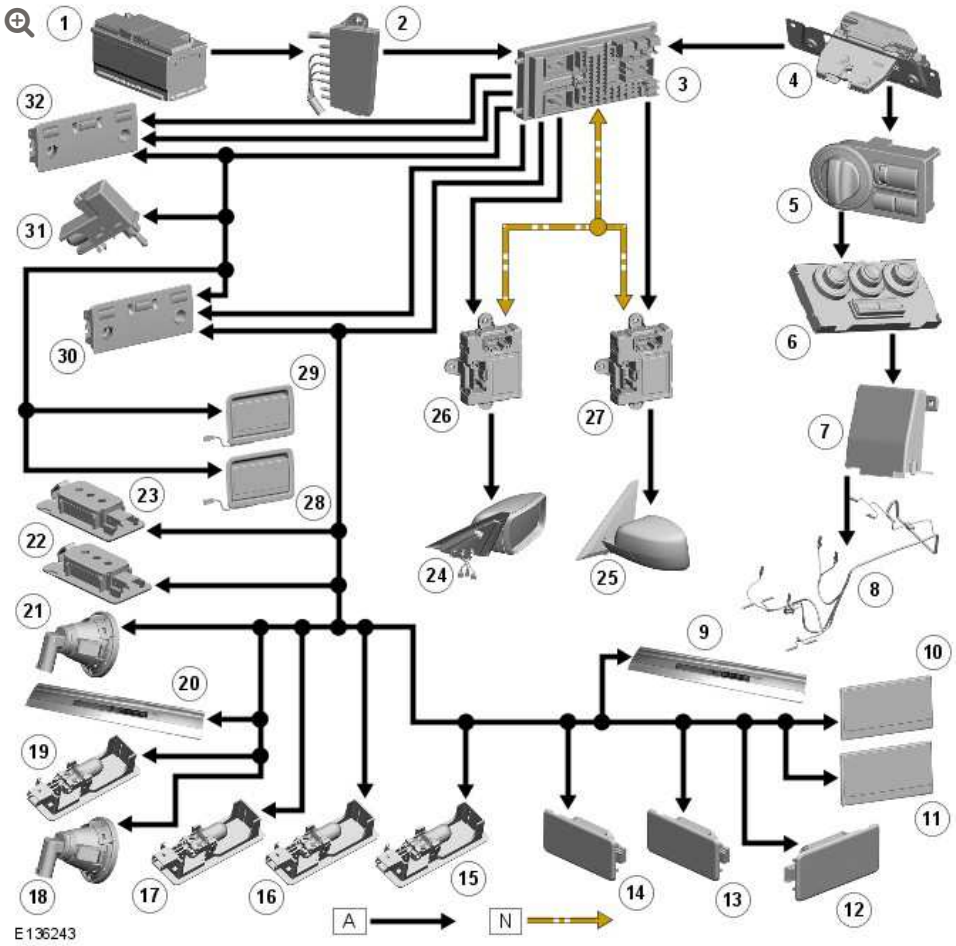

ITEM	DESCRIPTION
1	Battery
2	Battery Junction Box (BJB)
3	Central Junction Box (CJB)
4	Tail door latch motor assembly
5	Lighting control switch (illumination dimmer control)
6	Rear climate control panel

ITEM	DESCRIPTION
7	Rear entertainment Control Module (RECM)
8	Rear floor console mood lighting harness and LEDs
9	RH treadplate illumination LEDs
10	LH front vanity mirror illumination lamps
11	RH front vanity mirror illumination lamps
12	Luggage compartment lamp
13	LH upper tail door lamp
14	RH upper tail door lamp
15	LH rear door puddle lamp
16	RH rear door puddle lamp
17	LH front door puddle lamp
18	LH sill lamp
19	RH front door puddle lamp
20	LH treadplate illumination LEDs
21	RH sill lamp
22	LH footwell lamp
23	RH footwell lamp
24	Passenger door mirror approach lamp
25	Driver's door mirror approach lamp
26	Passenger door module
27	Driver's door module
28	LH rear vanity mirror illumination lamps
29	RH rear vanity mirror illumination lamps
30	Front interior and reading lamps
31	Glove compartment switch and lamp
32	Rear interior and reading lamps

2012.0 RANGE ROVER (LM), 417-02

INTERIOR LIGHTING

DESCRIPTION AND OPERATION

INTERIOR LIGHTING COMPONENT LOCATION

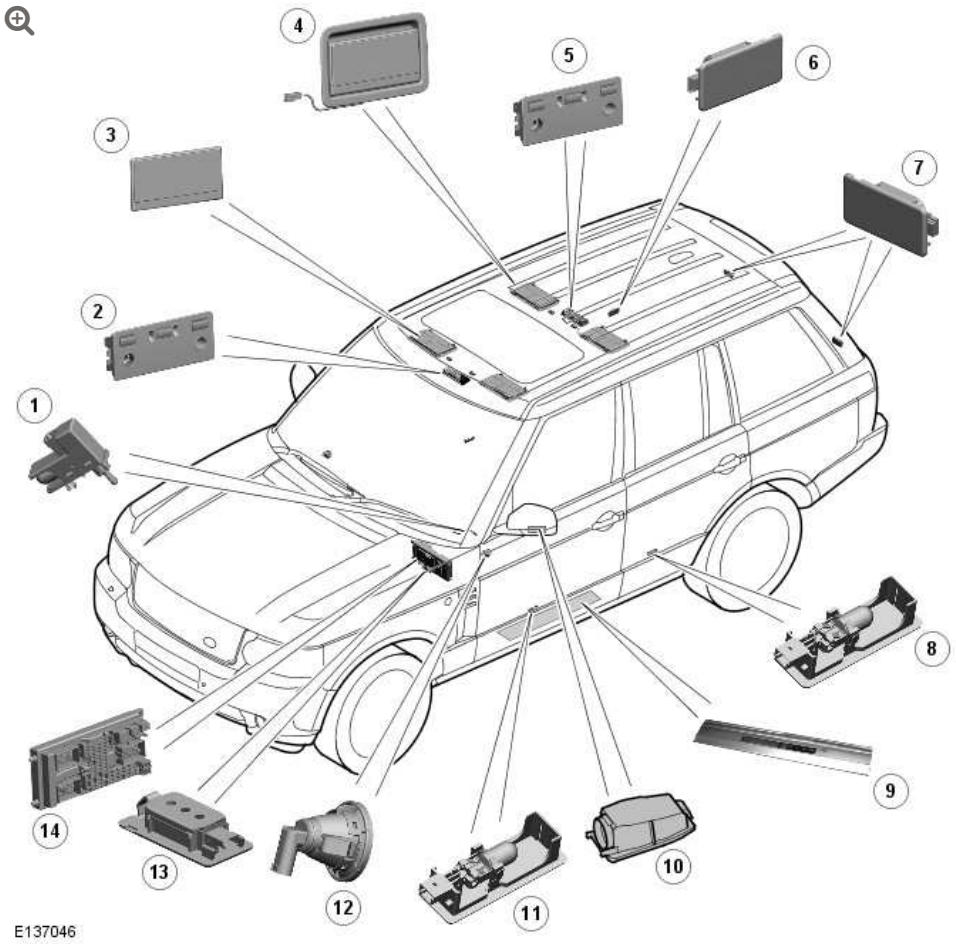

ITEM	DESCRIPTION
1	Glove compartment switch and lamp
2	Front interior and reading lamp

ITEM	DESCRIPTION
3	Front vanity mirror illumination lamps (2 off)
4	Rear vanity mirror illumination lamps (2 off)
5	Rear interior and reading lamp
6	Luggage compartment lamp
7	Upper tail door lamps
8	Rear door puddle lamp (2 off)
9	Front door treadplate LED illumination (2 off)
10	Door mirror approach lamp (2 off)
11	Front door puddle lamp (2 off)
12	Sill lamp (2 off)
13	Footwell lamp (2 off)
14	Central Junction Box (CJB)

GENERAL

NOTE:

The LED (light emitting diode) illumination of the front door pockets and the front and rear interior door handles is a function of the CJB (central junction box) and only operates when the light control switch is in the side lamp or headlamp positions.

The interior lighting is controlled by the CJB which is located behind the glove compartment. The interior lighting comprises the following lamps:

- Front interior lamp unit
- Rear interior lamp unit

- Upper tail door load space lamps (2 off)
- Luggage compartment load space lamp
- Fascia mounted sill lamps (2 off)
- Under fascia footwell lamps (2 off)
- Door mirror approach lamps (2 off)
- Puddle lamps (4 off).

The interior lamps have two modes of operation; automatic or manual. In the automatic mode the interior lamp functionality is controlled by the CJB on receipt of various input signals. In manual mode, the lamps can be switched on and off using the momentary button adjacent to the front interior lamp or can be disabled completely using the same switch.

The following table shows the bulbs used for the interior lighting and their type and rating:

NOTE:

Some interior lighting is LED and not listed in the below table.

BULB	TYPE	RATING
Front and rear interior lamps	Capless	6W
Front and rear map reading lamps	Capless	6W
Load space lamp	Capless	5W
Luggage compartment lamps (upper tail door)	Capless	5W
Vanity mirror lamps	Festoon	14V 0.1A (0.14W)
Door puddle lamps	Capless	5W
Fascia sill lamps	Capless	3W
Lower fascia footwell lamps	Capless	5W

BULB	TYPE	RATING
Door mirror approach lamps	Capless	6W
Glove compartment lamp	Festoon	5W

FRONT AND REAR INTERIOR LAMPS AND MAP READING LAMPS

The front and rear interior lamp assemblies are similar in design. The front interior lamp switch is connected directly to the CJB and controls the manual operation of the interior lamp functionality. The rear interior lamp switch is used only to switch the lamp on and off.

The map reading lights have a non-adjustable beam and are controlled via separate switches. Both the interior and map reading lamps use capless 5W bulbs.

LUGGAGE COMPARTMENT LAMPS

The luggage compartment lamps comprise one lamp unit located on the RH (right-hand) side trim panel, adjacent to the auxiliary power socket, and two lamps located in the interior trim panel of the upper tail door. All of these lamps are of the same design and use capless 5W bulbs. The lamps are controlled by the tail door latch assembly and the CJB and operate on the automatic interior lamp functionality.

GLOVE COMPARTMENT LAMP

The glove compartment lamp is located inside the glove compartment, at the top, adjacent to the latch. The lamp comprises a festoon 5W bulb. The lamp housing also incorporates a plunger type switch which is activated to switch the lamp on when the glove compartment lid is opened.

VANITY MIRROR ILLUMINATION LAMPS

The vanity mirror lamps are located in the front sun visors and also in the headlining for use by the rear seat passengers. The lamps are located behind a hinged cover, either side of the mirror glass. A festoon type bulb is fitted in contacts behind each lamp lens. The lamps are activated by a simple switch which operates when the mirror cover is lifted.

FOOTWELL LAMPS

Two types of footwell lamps are fitted. Two directional sill lamps are located in the front of the fascia and illuminate the sill area. These lamps use 3W capless bulbs.

Two further footwell lamps are located in the lower fascia closing panels and illuminate the area below the fascia. These lamps use 5W capless bulbs. The lamps are controlled by the CJB and operate on the automatic interior lamp functionality.

DOOR PUDDLE LAMPS

Each of the doors is fitted with a puddle lamp to illuminate the ground below the door when the door is open. The front door puddle lamps are located in the lower face of the door, facing the ground. The rear door puddle lamps are located in the bottom of the door trim panel.

The puddle lamps use a capless 5W bulb. The puddle lamps are controlled by the CJB and operate on the automatic interior lamp functionality.

DOOR MIRROR APPROACH LAMPS

The exterior mirror housings are fitted with a lamp which illuminates the area below the front door. The approach lamps comprise a housing located inside the mirror and bulb holder with harness connector. The housing contains a plastic lens which directs a beam of light in the required area. The approach lamps use a capless 6W bulb.

The lamps are controlled by the CJB, via the front driver and passenger door modules. The CJB sends a CAN (controller area network) message to the door module to illuminate the approach lamps when an unlock signal, a front door open signal or an ignition off mode is detected.

DIAGNOSTICS

Diagnostics for the interior lamps is limited to a check of the function of the front interior lamp switch. The CJB can be interrogated using a Land Rover approved diagnostic system to establish the correct operation of the front interior lamp switch, the door switches and the tail door switch.

OPERATION

The interior lamp operation is activated by any of the following input signals:

- Door switch contacts (front and rear)
- Tail door latch assembly
- Ignition switch position I (Aux)
- Central locking, lock request
- Central locking remote handset operation
- Crash sensor

- Front interior lamp switch.

The load space lamp and the upper tail door lamps are not switched on with the interior lamps. These lamps are only activated when the upper tail door is opened. When the upper tail door is opened, the interior lamps, in addition to the load space lamps, are switched on and are subject to the CJB timers. The tail door open signal to the CJB is provided by a microswitch in the tail door latch assembly.

AUTOMATIC OPERATION

The automatic control of the interior lamps has several switch on and off conditions as follows:

- The interior lamps are switched on when one or more doors are opened. When all the doors are closed, the interior lamps are switched off after a delay of 20 seconds. If the vehicle is locked after closing the doors, within the 20 second period, the lamps go off immediately.
- When the interior lamps are on and the ignition is moved to positions I or II, the lamps go off immediately after all doors have been closed.
- When the ignition switch is moved to the off position, the interior lamps are switched on for 20 seconds. This timer is overridden if a door is subsequently opened.
- When the vehicle is unlocked and the doors are closed, the interior lamps can be activated for a further 20 second period by pressing the 'unlock' button on the remote handset.
- When the vehicle is unlocked from a locked condition, the interior lamps are activated for a 20 second period. This timer is overridden if a door is subsequently opened.

- If a door is left open, the interior lamps will remain on for 16 minutes. After this period, the CJB timer switches the interior lamps off to prevent excessive battery drain.

The CJB uses a PWM (pulse width modulation) operation of the interior lamps for the on/off conditions. The lamps are switched on with a 'soft ramp' of 1.3 seconds. The lamps are switched off with a 'soft ramp' of 2.6 seconds. The soft on/off operation is controlled by a semiconductor within the CJB

MANUAL OPERATION

The interior lamps can be switched on or off using the manual switch for the front interior lamp. The front interior lamp switch will switch all interior lamps, front and rear, on or off. If the interior lamps are on when the switch is pressed, all interior lamps will go off. The on and off automatic switching conditions remain effective even when the manual switch is used.

If the ignition switch is in position I or II and the front interior lamp switch is used to switch the interior lamps on, the lamps will remain on continuously whilst the ignition is in position I or II. If the ignition switch is moved to the off position, the interior lamps will be subject to the 16 minute CJB timer. The interior lamp is immediately switched off when the vehicle is locked. After a locking procedure, the interior lamp automatic control is reinstated.

The rear interior lamp switch will switch the rear interior lamp only on or off.

CONTINUOUS OFF

To prevent drain on the battery if the doors are to remain open for some time, the interior lamps can be turned off permanently. This is stored in the CJB EEPROM and is also activated following a system power down or a reset of the CJB

To enter the continuous off condition, the front interior lamp switch must be pressed and held for more than 3 seconds. The continuous off function can only be disabled by pressing the front interior lamp switch, after which, full automatic control is resumed. When continuous off is active, the rear interior lamp switch can still be used to switch the rear interior lamp only on or off.

CRASH SIGNAL OPERATION

The CJB receives a crash signal on a hardwired connection from the RCM (restraints control module) in the event of a crash of a severity to activate the airbags. On receipt of this signal, the CJB activates the interior lamps which are on permanently and not subject to the CJB timer.

The crash operation of the interior lamps can only be cancelled by operating the manual switch on the front interior lamp or by locking and unlocking the vehicle.

INTERIOR LIGHTING CONTROL DIAGRAM

NOTE:

A = Hardwired; **N** = Medium speed CAN bus

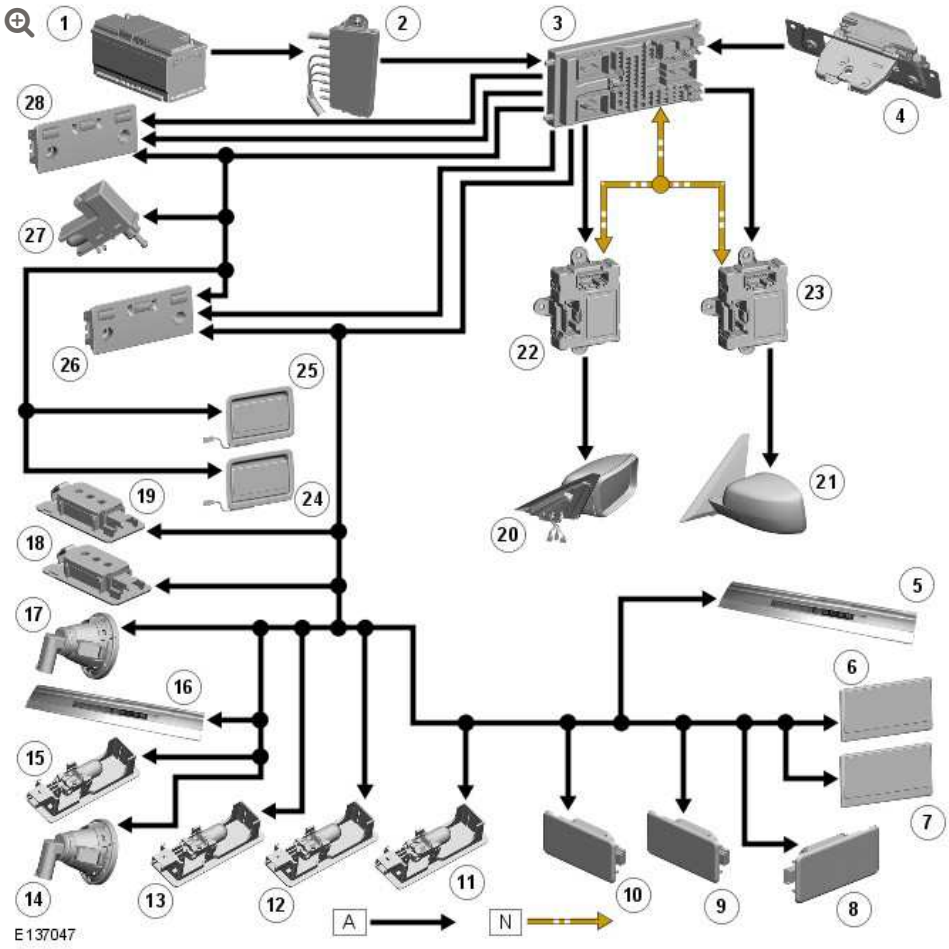

ITEM	DESCRIPTION
1	Battery
2	Battery Junction Box (BJB)
3	Central Junction Box (CJB)
4	Tail door latch motor assembly
5	RH treadplate illumination LEDs
6	LH front vanity mirror illumination lamps
7	RH front vanity mirror illumination lamps
8	Luggage compartment lamp
9	LH upper tail door lamp
10	RH upper tail door lamp
11	LH rear door puddle lamp
12	RH rear door puddle lamp

ITEM	DESCRIPTION
13	LH front door puddle lamp
14	LH sill lamp
15	RH front door puddle lamp
16	LH treadplate illumination LEDs
17	RH sill lamp
18	LH footwell lamp
19	RH footwell lamp
20	Passenger door mirror approach lamp
21	Driver's door mirror approach lamp
22	Passenger door module
23	Driver's door module
24	LH rear vanity mirror illumination lamps
25	RH rear vanity mirror illumination lamps
26	Front interior and reading lamps
27	Glove compartment switch and lamp
28	Rear interior and reading lamps

INTERIOR LIGHTING

DIAGNOSIS AND TESTING

PRINCIPLE OF OPERATION

For a detailed description of the interior lighting system and operation, refer to the relevant Description and Operation section of the workshop manual.
REFER to: Interior Lighting (417-02 Interior Lighting, Description and Operation).

INSPECTION AND VERIFICATION

CAUTION:

Diagnosis by substitution from a donor vehicle is **NOT** acceptable. Substitution of control modules does not guarantee confirmation of a fault and may also cause additional faults in the vehicle being checked and/or the donor vehicle.

NOTE:

Check and rectify basic faults before beginning diagnostic routines involving pinpoint tests.

1. Verify the customer concern.

2. Visually inspect for obvious signs of mechanical or electrical damage.

Visual Inspection

MECHANICAL	ELECTRICAL
▪ Main interior lamp condition and installation ▪ Map reading lamp(s) condition and installation ▪ Vanity mirror lamp(s) condition and installation ▪ Glove compartment lamp condition and installation ▪ Footwell lamp(s) condition and installation ▪ Ignition switch glow ring condition and installation ▪ Door mirror approach lamp(s) condition and installation ▪ Puddle lamp(s) condition and installation ▪ Luggage compartment lamp condition and installation	▪ Bulbs ▪ Fuses ▪ Battery Junction Box (BJB) ▪ Central Junction Box (CJB) ▪ Wiring harness ▪ Loose or corroded connector(s) ▪ Main interior lamp switch ▪ Map reading lamp switches ▪ Vanity mirror lamp switches ▪ Glove compartment lamp switch ▪ Waterfall lighting LED ▪ Tailgate lamp switch

3. If an obvious cause for an observed or reported concern is found, correct the cause (if possible) before proceeding to the next step.

4. If the cause is not visually evident, verify the symptom and refer to the Symptom Chart, alternatively check for Diagnostic Trouble Codes (DTCs) and refer to the relevant DTC Index.

SYMPTOM CHART

SYMPTOM	POSSIBLE CAUSES	ACTION
Main interior lamp inoperative	▪ Bulb(s) failure ▪ Fuse(s) blown ▪ Circuit fault ▪ Switch fault	Check the bulb(s) condition. Check the fuse(s). Check the lamp circuits. Check the switch function. Refer to the electrical guides.
Waterfall lighting LED inoperative	▪ LED failure ▪ Fuse(s) blown ▪ Circuit fault	Check the LED condition. Check the LED connector. Check the fuse(s). Check the lamp circuits. Refer to the electrical guides.
Map reading lamp (s) inoperative	▪ Bulb(s) failure ▪ Fuse(s) blown ▪ Circuit fault ▪ Switch fault	Check the bulb(s) condition. Check the fuse(s). Check the lamp circuits. Check the switch function. Refer to the electrical guides.
Vanity mirror lamp (s) inoperative	▪ Bulb failure ▪ Fuse(s) blown ▪ Circuit fault ▪ Switch fault	Check the bulb condition. Check the fuse(s). Check the lamp circuits. Check the switch function. Refer to the electrical guides.
Glove compartment lamp inoperative	▪ Bulb failure ▪ Fuse(s) blown ▪ Circuit fault ▪ Switch fault	Check the bulb condition. Check the fuse(s). Check the lamp circuits. Check the switch function. Refer to the electrical guides.
Footwell lamp inoperative	▪ Bulb failure ▪ Fuse(s) blown	Check the bulb condition. Check the fuse(s). Check the lamp circuits. Refer to the electrical guides.

SYMPTOM	POSSIBLE CAUSES	ACTION
	▪ Circuit fault	
Ignition switch glow ring inoperative	▪ Bulb/Glow ring failure ▪ Fuse(s) blown ▪ Circuit fault	Check the bulb/glow ring condition. Check the fuse(s). Check the lamp circuits. Refer to the electrical guides.
Door mirror approach lamp(s) inoperative	▪ Bulb failure ▪ Fuse(s) blown ▪ Circuit fault	Check the bulb condition. Check the fuse(s). Check the lamp circuits. Refer to the electrical guides.
Puddle lamp(s) inoperative	▪ Bulb failure ▪ Fuse(s) blown ▪ Circuit fault	Check the bulb condition. Check the fuse(s). Check the lamp circuits. Refer to the electrical guides.
Luggage compartment lamp inoperative	▪ Bulb failure ▪ Fuse(s) blown ▪ Circuit fault ▪ Switch fault	Check the bulb condition. Check the fuse(s). Check the lamp circuits. Check the switch function. Refer to the electrical guides.

DTC INDEX

For a list of Diagnostic Trouble Codes (DTCs) that could be logged on this vehicle, please refer to Section 100-00. REFER to: Diagnostic Trouble Code (DTC) Index - DTC: Module Name: Central Junction Box (100-00, Description and Operation).

DAYTIME RUNNING LAMPS (DRL)

DESCRIPTION AND OPERATION

DRL use the full intensity low beam headlamps which are permanently illuminated when the vehicle is being driven. DRL are used in a number of markets and there are two systems to cover these markets.

DRL CANADIAN MARKET

DRL for this market use full intensity low beam headlamps. The side marker lamps and license plate lamps will be on, but instrument cluster illumination will be off. DRL are active when the following parameters are met:

- Parking brake is off on vehicles with manual transmission or PARK is not selected on vehicles with automatic transmission
- Ignition is in mode 6 (ignition on)
- The CJB (central junction box) receives an engine running signal
- The lighting control switch is in the off, side or 'Auto' lamps position.

NOTES:

- If the lighting control switch is moved to the side lamp or headlamp positions, DRL are deactivated and normal side lamp and headlamp functionality is operational.
- Adaptive Front lighting System (AFS) (where fitted) is deactivated when the DRL are active.
- When DRL are active, the headlamp flash function using the left hand steering column multifunction switch will operate normally. The high beam headlamp function using the left hand steering column multifunction switch will be deactivated.

When the parking brake is applied or the selector lever is in the PARK position on automatic transmission vehicles, DRL are turned off. This is to reduce battery discharge during long periods of engine idling in cold climate conditions. When the parking brake is released or the selector lever is moved from the PARK position, normal DRL functionality is restored.

DRL DENMARK, HOLLAND, NORWAY, SWEDEN, FINLAND AND POLAND

NOTE:

DRL for Poland is on vehicles from 2008MY.

DRL for these markets use full intensity low beam headlamps. Side lamps and license plate lamps will be on, but instrument cluster illumination will be off. DRL are active when the following parameters are met:

- Ignition is in mode 6 (ignition on)
- The CJB receives an engine running signal
- The lighting control switch is in the off or 'Auto' position.

NOTE:

When DRL are active, the headlamp flash function using the left hand steering column multifunction switch will operate normally. The high beam headlamp function using the left hand steering column multifunction switch will be deactivated.

If the lighting control switch is moved to the side lamp or headlamp positions or the 'Auto' feature illuminates the exterior lamps, DRL are deactivated and normal side lamp and headlamp functionality is operational.

MODULE COMMUNICATIONS NETWORK

SPECIFICATIONS

Torque Specifications

DESCRIPTION	NM	LB-FT
Body ground cable to stud nut	9	6.6
Hood ground cable nut	6	4.4
Starter motor switch lead nut (Diesel only)	4	3
Battery positive cable to starter motor nut (Diesel)	22	16
Battery positive cable to starter motor nut (Petrol)	10	7
Starter motor bolts	47	35
Headlamp nuts	4	3
Tire pressure module sensor valve	8	6
Audio amplifier bolts	5	7
Antenna nuts	5	3.7
Telephone control unit nuts	1.5	1.1
Rear seat entertainment interface unit bracket bolts	9	6.6
Satellite digital audio radio service (SDARS) tuner/receiver bolts (NAS only)	8	6
Parking aid sounder nut	2	1.5

DESCRIPTION	NM	LB-FT
Tailgate solenoid motor bolt	10	7
Horn mounting bracket bolt	20	15
Alarm tilt sensor nuts	7	5
Engine junction box (EJB) nuts	9	6.6
EJB positive battery cable nut	9	6.6

MODULE COMMUNICATIONS NETWORK

CENTRAL JUNCTION BOX (CJB) (G1345589)

REMOVAL AND INSTALLATION

86.55.75	CENTRAL CONTROL MODULE - RENEW	ALL DERIVATIVES	0.1	USED WITHINS	+

REMOVAL

NOTE:

Removal steps in this procedure may contain installation details.

1. Refer to: Lower Glove Compartment (501-12, Removal and Installation).

2.

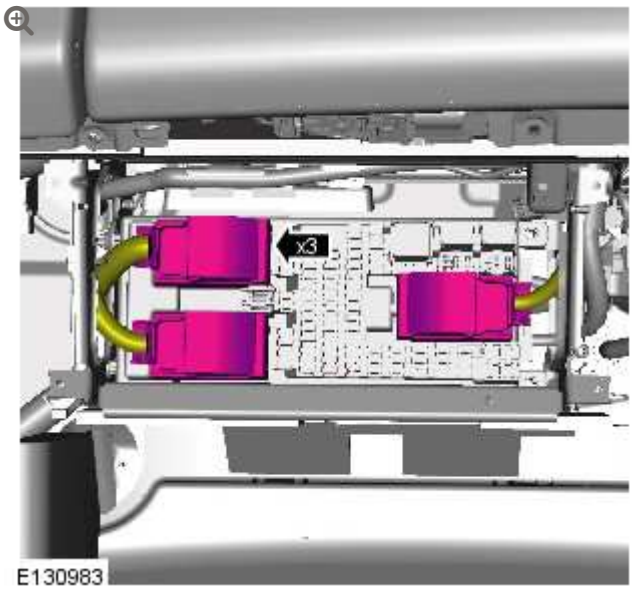

3.

NOTE:

The component cannot be removed at this stage.

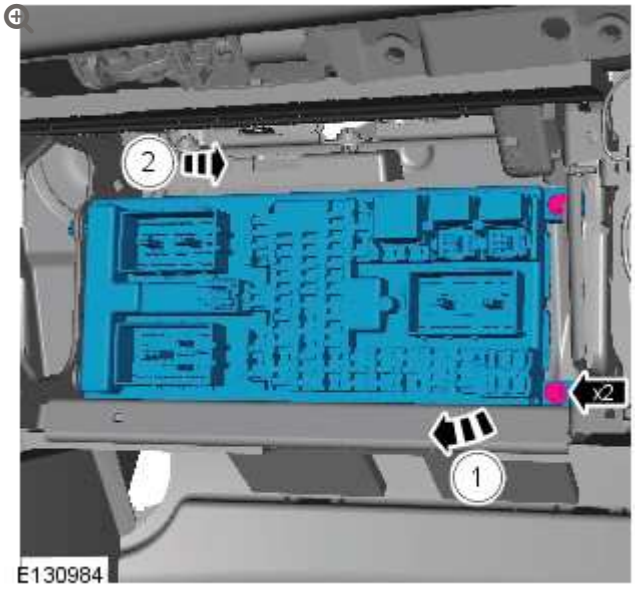

Torque: **10 Nm**

4.

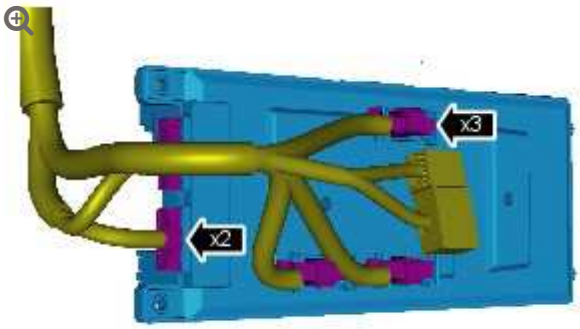

E130985

INSTALLATION

1. To install, reverse the removal procedure.

MODULE COMMUNICATIONS NETWORK

DIAGNOSIS AND TESTING

PRINCIPLES OF OPERATION

For a detailed description of the Communications Network, refer to the relevant Description and Operation sections in the workshop manual.

INSPECTION AND VERIFICATION

CAUTIONS:

- Diagnosis by substitution from a donor vehicle is **NOT** acceptable. Substitution of control modules does not guarantee confirmation of a fault, and may also cause additional faults in the vehicle being tested and/or the donor vehicle.
- Electronic modules are sensitive to static electrical charges. If exposed to these charges, damage may result.

1. Verify the customer concern

2. Visually inspect for obvious signs of damage and system integrity

Visual Inspection

ELECTRICAL
▪ Fuses (refer to electrical guide) ▪ Wiring harness ▪ Correct engagement of electrical connectors ▪ Loose or corroded connections ▪ Routing of fibre optic harnesses ▪ Correct engagement of optical connectors ▪ Correct placement of optical connectors (ring order) ▪ Correct assembly of optical connectors (backout, etc) ▪ Damage to fibre (chafing, abrasion, kinking, cuts, etc)

3. If an obvious cause for an observed or reported concern is found, correct the cause (if possible) before proceeding to the next step

4. If the cause is not visually evident, check for Diagnostic Trouble Codes (DTCs) and refer to the DTC Index

SYMPTOM CHART

SYMPTOM	POSSIBLE CAUSES	ACTION
MOST network fault - Entertainment system on/off switch amber LED flashing	▪ MOST ring broken ▪ Control module on MOST network power or ground circuit open circuit, high resistance ▪ Control module on MOST network internal failure	▪ GO to Pinpoint Test **B.**

SYMPTOM	POSSIBLE CAUSES	ACTION
MOST network fault - Touch screen display blank	▪ Touch screen display power or ground circuit open circuit, high resistance ▪ Touch screen display internal failure	▪ GO to Pinpoint Test **G.**

CONTROLLER AREA NETWORK (CAN)

Control Module Connections to the CAN Harness

Control modules are connected to the CAN harness either in a 'loop' or 'spur' configuration. In the 'loop' type configuration the CAN harness loops into the module (via two connector pins) and then loops out of the module (via another two connector pins). In the 'spur' type configuration, a harness spur is spliced into the main 'backbone' of the CAN harness and the module is connected to the harness spur via two connector pins.

CAN Harness Architecture

For a detailed description of the CAN Networks and architecture, refer to the relevant Description and Operation section in the Workshop Manual.

CAN Network Integrity Tests

If a control module is suspected of non-communication, the Network Integrity test application available on the manufacturer approved diagnostic system can be used to confirm if communication is possible between the control modules on the vehicle and the manufacturer approved diagnostic system (via the J1962 diagnostic connector). The results from the test can be used to determine if either a single module or multiple modules are failing to communicate.

CAN Terminating Modules

If the Network Integrity test indicates that one or more module on one of the CAN networks (HS or MS) are failing to communicate, there are several checks that can be made. The first step is to identify if both of the CAN terminating modules on each individual CAN Bus are communicating. If both CAN terminating modules for each individual CAN Bus are communicating (identified via the Network Integrity test), then it can be confirmed that the main 'backbone' of the CAN harness is complete. The main 'backbone' of the CAN harness consists of all the modules connected to the CAN harness via a 'loop' configuration and also includes the two terminating modules.

Communication with both CAN terminating modules via the Network Integrity test confirms the physical integrity of the main 'backbone' of the CAN harness (and the harness spur to the J1962 diagnostic connector). This means that there is no requirement to check the resistance of the CAN Network. This is because the standard check for 60 ohms across the CAN High and CAN Low lines will not provide any additional information regarding the physical condition of the CAN harness, beyond what has already been determined from the Network Integrity test.

Non-Communication of a Terminating Module

If a Network Integrity test reveals a terminating module is failing to communicate it can indicate a break in the main 'backbone' of the CAN harness. The first checks should always be to confirm the power and ground supplies to the non-communicating module are correct. Providing these are correct, the resistance between the CAN High and CAN Low lines at the J1962 connector can be checked to determine the integrity of the main 'backbone' of the CAN harness. After disconnecting the battery a reading of 120 ohms would indicate an open circuit in the main 'backbone' of the CAN harness. Alternatively, a reading of 60 ohms would indicate that there is no open circuit fault with the main 'backbone' of the CAN harness.

It is worth noting that even if one of the terminating modules is disconnected from the CAN harness, communications between the modules still connected may still be possible. Therefore communication between the manufacturer approved diagnostic system and the connected modules may also be possible.

Locating CAN Harness Open Circuits

In the case where multiple modules, including a terminating module, are failing to communicate, having first confirmed the power and ground supplies are correct, the approximate location of the open circuit can be identified from analysis of the Network Integrity test results and reference to the relevant CAN network circuit diagrams. For example, if an open circuit existed in a certain position on the CAN harness, any module positioned on the Network between the J1962 connector and the open circuit should return a response during the Network Integrity test. No responses would be returned from any modules past the open circuit fault in the Network.

CAN Harness 'Spur' Type Configuration Circuits

If, after the initial checks (Network Integrity test using the manufacturer approved diagnostic system, and power and ground supplies to the module have been checked and confirmed as correct), a module that is connected to the CAN harness via a 'spur' type configuration is suspected of not communicating, then the physical integrity of the CAN harness 'spur' can be checked.

This is most easily undertaken by individually checking the continuity of the CAN High and CAN Low lines between the non-communicating module connector (with the module disconnected) and the J1962 diagnostic connector.

'Lost Communications' DTCs

As well as the methods described so far in this document, which can be used to determine the location of an open circuit in the CAN harness, 'Lost Communications' DTCs can also be used for this purpose. Lost communication DTCs mean that a module is not receiving CAN information from another module.

For example, if a global DTC read were to be carried out, only DTCs stored in the modules that the manufacturer approved diagnostic system could communicate with would be displayed. If there was an open circuit fault in a certain position on the CAN harness, the modules that could display DTCs would all be prior to the open circuit on the Network, and these modules should display 'Lost Communications' DTCs with all the modules located on the Network past the open circuit fault.

'Bus off' DTCs

The references to bus and its condition refer to the network concerned and the modules on that network.

If a module logs a 'Bus Off' DTC, it means that the module has detected CAN transmission errors and has disabled it's own CAN transmissions and disconnected itself from the network in an attempt to allow the rest of the network to function. At this point the 'Bus Off' DTC is set. A common cause of 'Bus Off' DTCs can be a short circuit in the CAN network.

MEDIA ORIENTED SYSTEMS TRANSPORT (MOST)

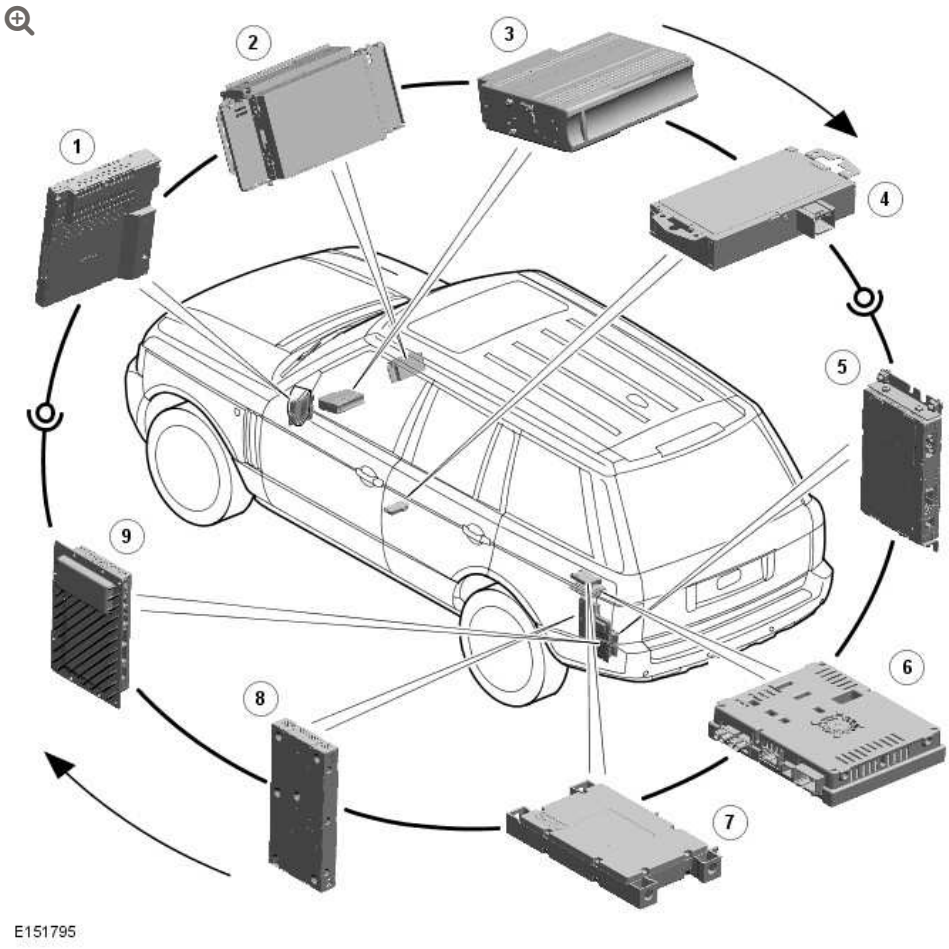

NOTE:

Items 1, 2 and 9 will always be present. The remaining items are optional and/or market specific.

ITEM	DESCRIPTION
1	Audio head unit
2	Touch screen display
3	CD autochanger
4	Portable audio interface module
5	DAB tuner module

ITEM	DESCRIPTION
6	Television receiver
7	Telephone module
8	Rear seat entertainment module
9	Power amplifier

Overview

The basic guidelines are covered in the description and operation section, such as not attempting to repair fibre optic cables, but additional precautions include:

- Do not touch the exposed ends of the optical fibres (grease from skin can contaminate the fibre)
- Whenever the fibre optic cable is disconnected, cover the connectors to prevent dust contamination
- Do not expose the fibre optic cable to heat
- Do not bend the fibre optic cable through less than a 25 mm (one inch) radius
- Do not use laser pens to test the fibre optic cable's ability to pass light

MOST Diagnostic Tools

There are two dedicated tools for testing the MOST system:

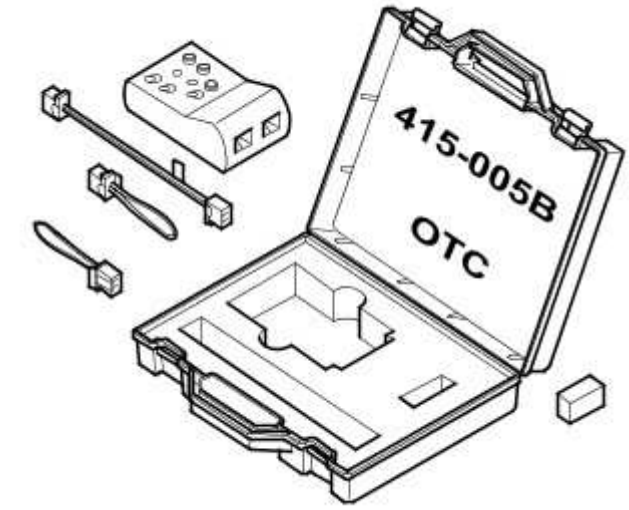

E150402

MOST tester. The MOST tester is connected to the MOST network in place of a control module. It will confirm receipt of any existing MOST signal and transmit it to the next control module on the network. Perform the following tests to validate the operation of the MOST tester. GO to Pinpoint Test A.

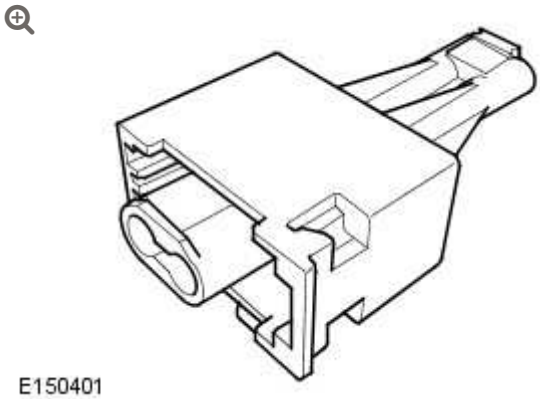
E150401

MOST prism: The MOST prism is connected in the same way as the MOST tester but will simply reflect any existing signal onward to the next control module. Using the MOST prism before or after a long run of harness may cause a ring break as a good signal may be too weak after travelling the extended distance. Also, the MOST prism will pass light in either direction so will not detect reversed MOST terminals elsewhere in the network. For these reasons, the MOST

tester is the preferred tool and should be used unless limited access does not permit it

MOST Ring Break Indication

A ring break in the MOST network is indicated by a loss of functionality and the entertainment system on/off switch amber LED flashing. The touch screen will default to the logo screen if the fault is present at the start of the ignition cycle and will freeze on the current screen if the fault occurs during an ignition cycle. Possible causes of ring breaks are listed in the symptom chart.

PINPOINT TESTS

NOTES:

- '2+0' indicates that the loop harness connector consists of 2 fibre optic terminals and 0 electrical terminals.
- The MOST tester may continue to emit a tone or illuminate the LED after the test switch is released. This does not indicate a fault.

NOTES:

- '2+4' indicates that the loop harness connector consists of 2 fibre optic terminals and 4 electrical terminals.
- The MOST tester may continue to emit a tone or illuminate the LED after the test switch is released. This does not indicate a fault.

NOTE:

The MOST tester may continue to emit a tone or illuminate the LED after the test switch is released. This does not indicate a fault.

PINPOINT TEST A : MOST TESTER TESTS	
TEST CONDITIONS	DETAILS/RESULTS/ACTIONS
	A1: MOST TESTER BATTERY TEST
	1 Set the MOST tester power switch to 'on'
	Is the power LED illuminated? **Yes** Test passed. GO to A2. **No** Test failed. Install a new battery into the MOST tester. GO to A1.
	A2: 2+0 INPUT/OUTPUT TEST
	1 Set the MOST tester power switch to 'on'
	2 Set the connector selector switch to '2+0'
	3 Set the indication switch to 'beep' or 'LED'
	4 Remove the covers from the MOST tester 2+0 connector and the 2+0 loop harness connector
	5 Connect the 2+0 loop harness to the MOST tester 2+0 connector
	6 Operate the test switch and check the MOST tester beep/LED
	Did the MOST tester emit a tone or illuminate the LED? **Yes** Test passed. GO to A3. **No** Test failed. MOST tester or 2+0 harness fault
	A3: 2+4 INPUT/OUTPUT TEST
	1 Set the MOST tester power switch to 'on'
	2 Set the connector selector switch to '2+4'

PINPOINT TEST A : MOST TESTER TESTS	
	3 Set the indication switch to 'beep' or 'LED'
	4 Remove the covers from the MOST tester 2+4 connector and the 2+4 loop harness connector
	5 Connect the 2+4 loop harness to the MOST tester 2+4 connector
	6 Operate the test switch and check the MOST tester beep/LED
	Did the MOST tester emit a tone or illuminate the LED? **Yes** Test passed. **GO to A4**. **No** Test failed. MOST tester or 2+4 harness fault
A4: ADAPTER HARNESS AND PRISM TEST	
	1 Set the MOST tester power switch to 'on'
	2 Set the connector selector switch to '2+0'
	3 Set the indication switch to 'beep' or 'LED'
	4 Remove the covers from the MOST tester 2+0 connector, the prism, and the adapter harness connectors
	5 Connect the adapter harness to the MOST tester 2+0 connector
	6 Connect the prism to the adapter harness
	7 Operate the test switch and check the MOST tester beep/LED
	Did the MOST tester emit a tone or illuminate the LED? **Yes** Test passed **No** Test failed. MOST tester, adapter harness or prism fault

NOTE:

When connecting the MOST tester, use the 2+0 or 2+4 socket as appropriate and set the connector selector switch to match the socket in use

PINPOINT TEST B : MOST NETWORK INITIAL TESTS	
TEST CONDITIONS	DETAILS/RESULTS/ACTIONS
	B1: MOST NETWORK INITIAL TEST 1
	1 Switch on the audio/video system
	2 Disconnect the MOST harness connector from the power amplifier
	3 Set the MOST tester power switch to 'on'
	4 Connect the MOST harness connector to the MOST tester
	5 Check the entertainment system on/off switch amber LED for indication of a MOST network fault
	Has the MOST network been restored? **Yes** The disconnected control module is causing the MOST network fault. GO to Pinpoint Test **E.** **No** The disconnected control module is not causing MOST network fault. **GO to B2**.
	B2: MOST NETWORK INITIAL TEST 2
	1 Check the MOST tester beep/LED
	Did the MOST tester emit a tone or illuminate the LED? **Yes** MOST signal received. The MOST network fault is located downstream of the MOST tester. GO to Pinpoint Test **C.** **No** MOST signal not received. The MOST network fault is located upstream of the MOST tester. Disconnect the MOST harness connector from the MOST tester and reconnect it to the control module. GO to Pinpoint Test **D.**

PINPOINT TEST C : MOST NETWORK DOWNSTREAM TESTS	
TEST CONDITIONS	DETAILS/RESULTS/ACTIONS
C1: MOST NETWORK DOWNSTREAM TEST 1	
	1 Disconnect the MOST harness connector from the audio head unit
	2 Direct the MOST harness connector at a suitable surface and check for the presence of red light
	Is red light present? **Yes** GO to Pinpoint Test **H.** **No** The fault is in the MOST harness between the MOST tester and the audio head unit. Install a new MOST harness as necessary

NOTE:

When connecting the MOST tester, use the 2+0 or 2+4 socket as appropriate and set the connector selector switch to match the socket in use

PINPOINT TEST D : MOST NETWORK UPSTREAM TESTS	
TEST CONDITIONS	DETAILS/RESULTS/ACTIONS
D1: MOST NETWORK UPSTREAM TEST 1	
	1 Refer to the electrical circuit diagrams and identify the preceding control module on the MOST network
	Is this control module the touch screen display? **Yes** GO to Pinpoint Test **F.** **No** **GO to D2**.
D2: MOST NETWORK UPSTREAM TEST 2	
	1 Disconnect the MOST harness connector from the control module

PINPOINT TEST D : MOST NETWORK UPSTREAM TESTS	
	2 Direct the MOST harness connector at a suitable surface and check for the presence of red light
	Is red light present? **Yes** The MOST network fault is in the control module or the MOST harness to the succeeding control module. **GO to D3**. **No** The MOST network fault is located upstream of the disconnected control module. Reconnect the MOST harness connector to the control module. **GO to D1**.
D3: MOST NETWORK UPSTREAM TEST 3	
	1 Connect the MOST harness connector to the MOST tester
	2 Check the entertainment system on/off switch amber LED for indication of a MOST network fault
	Has the MOST network been restored? **Yes** The disconnected control module is causing the MOST network fault. GO to Pinpoint Test **E.** **No** The fault is in the MOST harness between the MOST tester and the succeeding control module. Install a new MOST harness as necessary

NOTE:

When connecting the MOST tester, use the 2+0 or 2+4 socket as appropriate and set the connector selector switch to match the socket in use

PINPOINT TEST E : CONTROL MODULE TESTS	
TEST CONDITIONS	**DETAILS/RESULTS/ACTIONS**
E1: CONTROL MODULE TEST 1	
	1 Connect the MOST tester to the relevant control module using the adapter harness
	Did the MOST tester emit a tone or illuminate the LED?

PINPOINT TEST E : CONTROL MODULE TESTS	
	Yes MOST signal received. Tests inconclusive. Reconnect the MOST harness connector to the control module and confirm that the MOST network fault is still present. Repeat the tests from the beginning. GO to Pinpoint Test **B.** **No** GO to E2.
E2: CONTROL MODULE TEST 2	
	1 Refer to the electrical circuit diagrams and test the relevant control module power and ground circuits for open circuit, high resistance
	Are the power and ground circuits within specification? **Yes** GO to E3. **No** Repair the power and/or ground circuit
E3: CONTROL MODULE TEST 3	
	1 Reconnect the MOST harness connector to the control module
	2 Check the entertainment system on/off switch amber LED for indication of a MOST network fault
	Has the MOST network been restored? **Yes** Tests inconclusive. Repeat the tests from the beginning. GO to Pinpoint Test **B.** **No** Install a new control module

PINPOINT TEST F : MOST NETWORK FINAL UPSTREAM TESTS	
TEST CONDITIONS	**DETAILS/RESULTS/ACTIONS**
F1: MOST NETWORK FINAL UPSTREAM TEST 1	
	1 Disconnect the MOST harness connector from the touch screen display
	2 Direct the touch screen display at a suitable surface and check for the presence of red light
	Is red light present? **Yes**

PINPOINT TEST F : MOST NETWORK FINAL UPSTREAM TESTS	
	The fault is in the MOST harness between the touch screen display and the succeeding control module. Install a new MOST harness as necessary **No** GO to F2.
F2: MOST NETWORK FINAL UPSTREAM TEST 2	
	1 Direct the MOST harness connector at a suitable surface and check for the presence of red light
	Is red light present? **Yes** GO to F3. **No** GO to F4.
F3: MOST NETWORK FINAL UPSTREAM TEST 3	
	1 Reconnect the MOST harness connector to the touch screen display
	2 Set the ignition switch to 'off'
	3 Set the ignition switch to 'on'
	Has the touch screen display operation been restored? **Yes** Tests inconclusive. Repeat the tests from the beginning. GO to Pinpoint Test B. **No** Install a new touch screen display
F4: MOST NETWORK FINAL UPSTREAM TEST 4	
	1 Disconnect the MOST harness connector from the audio head unit
	2 Direct the audio head unit at a suitable surface and check for the presence of red light
	Is red light present? **Yes** The fault is in the MOST harness between the audio head unit and the touch screen display. Install a new MOST harness as necessary **No** GO to Pinpoint Test H.

PINPOINT TEST G : BLANK SCREEN TESTS

PINPOINT TEST G : BLANK SCREEN TESTS	
TEST CONDITIONS	DETAILS/RESULTS/ACTIONS
G1: BLANK SCREEN TEST 1	
	1 Refer to the electrical circuit diagrams and test the touch screen display power and ground circuits for open circuit, high resistance
	Are the power and ground circuits within specification? **Yes** GO to G2. **No** Repair the power and/or ground circuit
G2: BLANK SCREEN TEST 2	
	1 Set the ignition switch to 'off'
	2 Set the ignition switch to 'on'
	Has the touch screen display operation been restored? **Yes** Tests inconclusive. Repeat the tests from the beginning. GO to Pinpoint Test **B.** **No** Install a new touch screen display

PINPOINT TEST H : AUDIO HEAD UNIT TESTS	
TEST CONDITIONS	DETAILS/RESULTS/ACTIONS
H1: AUDIO HEAD UNIT TEST 1	
	1 Using the manufacturer approved diagnostic system, check the audio head unit for related DTCs
	Is communication possible between the manufacturer approved diagnostic system and the audio head unit? **Yes** Refer to the relevant DTC index **No** GO to H2.
H2: AUDIO HEAD UNIT TEST 2	
	1 Refer to the electrical circuit diagrams and test the audio head unit power and ground circuits for open circuit, high resistance

PINPOINT TEST H : AUDIO HEAD UNIT TESTS	
	Are the power and ground circuits within specification? **Yes** GO to H3. **No** Repair the power and/or ground circuit
H3: AUDIO HEAD UNIT TEST 3	
	1 Using the manufacturer approved diagnostic system, perform a CAN network integrity test. Refer to the electrical circuit diagrams and test the medium speed CAN bus circuit for short circuit to ground, short circuit to power, open circuit, high resistance
	Is the medium speed CAN bus within specification? **Yes** Install a new audio head unit **No** Repair the medium speed CAN bus circuit

DTC INDEX

For a list of Diagnostic Trouble Codes (DTCs) that could be logged on this vehicle, please refer to Section 100-00.
REFER to: Diagnostic Trouble Code (DTC) Index - DTC: Module Name: Audio Front Control Module (100-00, Description and Operation).

WIRING HARNESSES

SPECIFICATIONS

Torque Specifications

DESCRIPTION	NM	LB-FT
Heated oxygen sensor harness heatshield bolt	10	7
Starter motor positive cable nut	12	9
Starter motor signal wire nut	4	3
Engine harness rear support bracket bolts	25	18
Wiring harness support housing bolts	6	4
Engine RH and LH bank front cover earth bolts.	10	7

WIRING HARNESSES

ENGINE WIRING HARNESS – V8 S/C 5.0L PETROL

(G1234951)

REMOVAL AND INSTALLATION

86.70.17	WIRING HARNESS – ENGINE – RENEW	5000 CC, AJ V8, SUPERCHARGED	3.1	USED WITHINS	+

REMOVAL

NOTES:

- Removal steps in this procedure may contain installation details.
- Some illustrations may show vehicles without supercharger, but the essential information shown is always correct.

1. Refer to: Specifications (414-00, Specifications).

2.

WARNING:

Make sure to support the vehicle with axle stands.

Raise and support the vehicle.

3. Secure the hood in the service position.

4. Refer to: Air Cleaner Outlet Pipe LH (303-12, Removal and Installation).

5. Refer to: Air Cleaner Outlet Pipe RH (303-12, Removal and Installation).

6. Refer to: Plenum Chamber (412-01, Removal and Installation).

7. Refer to: Exhaust System (309-00, Removal and Installation).

8. **NOTE:**

Remove and discard the gasket.

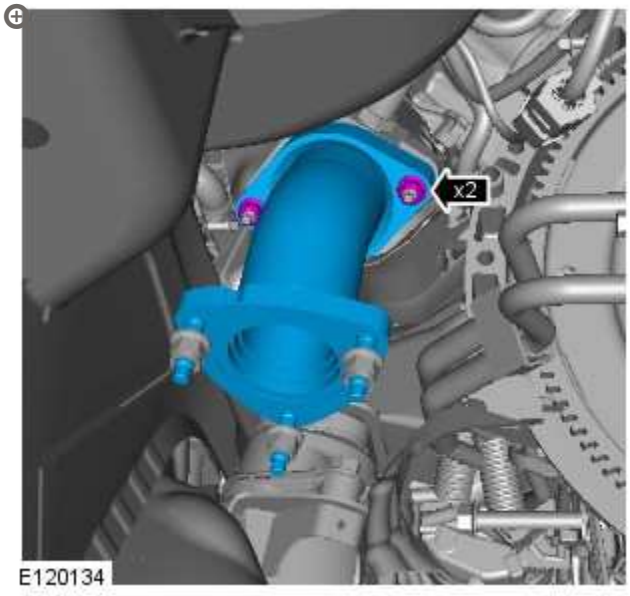

Torque: **48 Nm**

9.

NOTE:

Remove and discard the gasket.

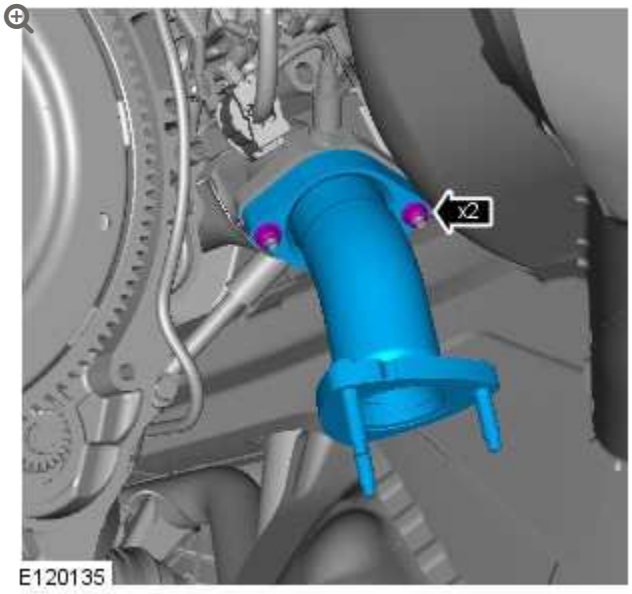

Torque: **48 Nm**

10.

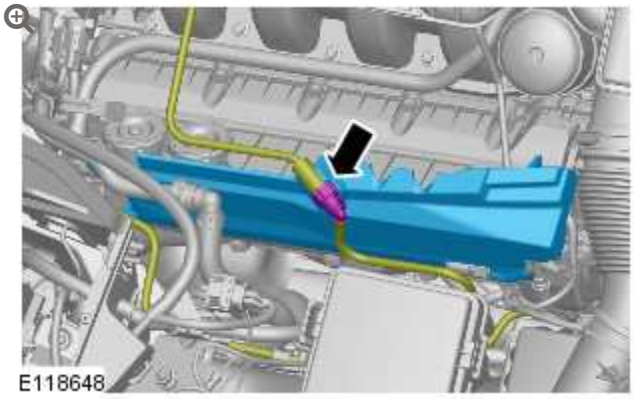

11.

WARNING:

Do not smoke or carry lighted tobacco or open flame of any type when working on or near any fuel related components. Highly flammable vapors are always present and may ignite. Failure to follow these instructions may result in personal injury.

CAUTION:

Be prepared to collect escaping fuel.

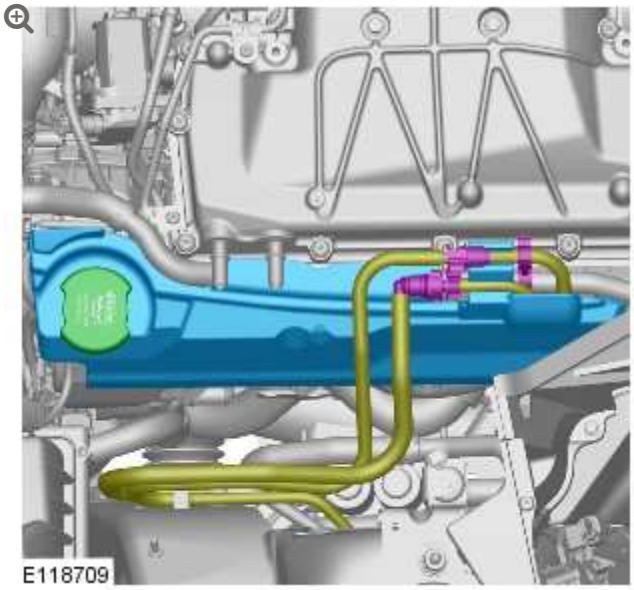

12.

NOTE:

RHD illustration shown, LHD is similar.

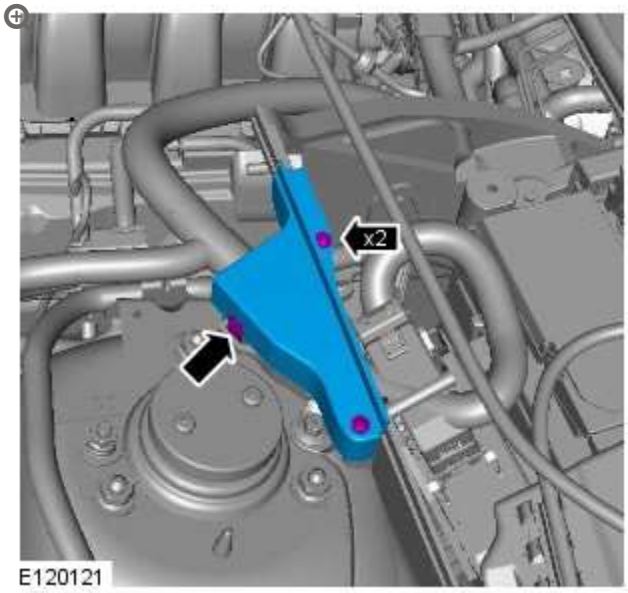

13.

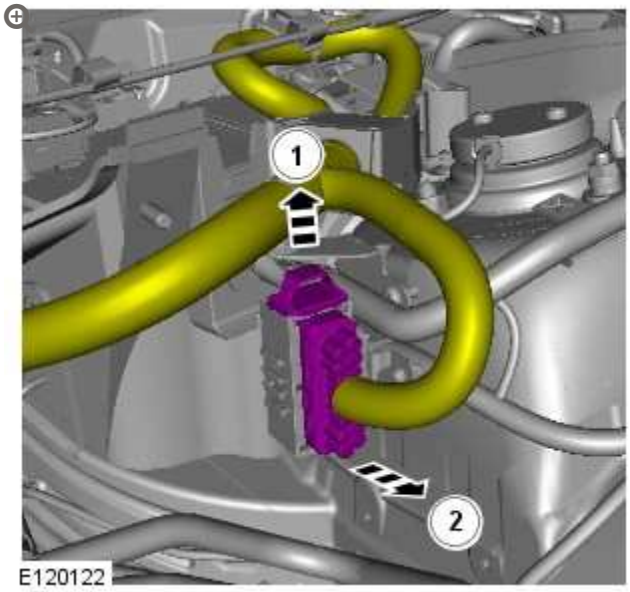

14.

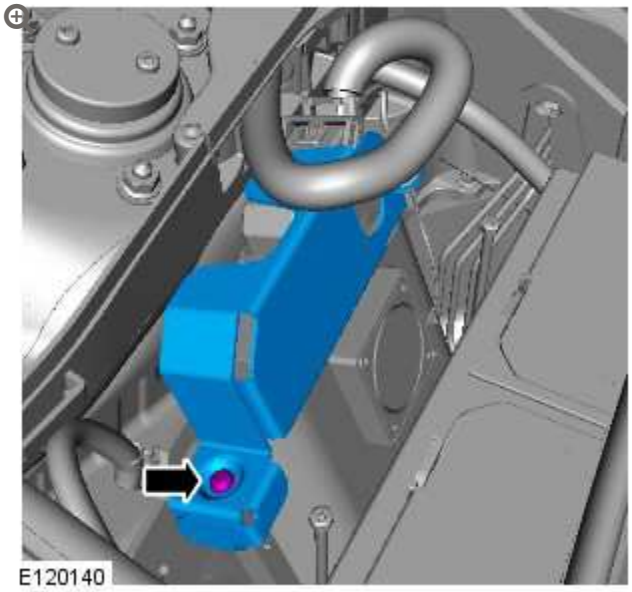

15.

NOTE:

Make sure the electrical connector is correctly secured.

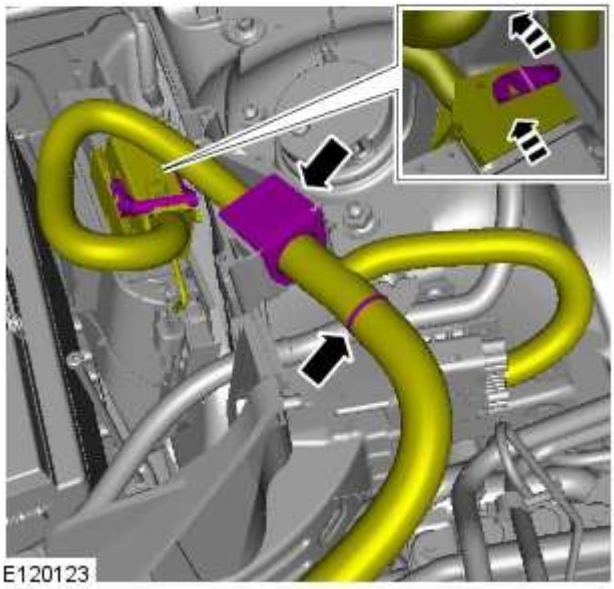

16.

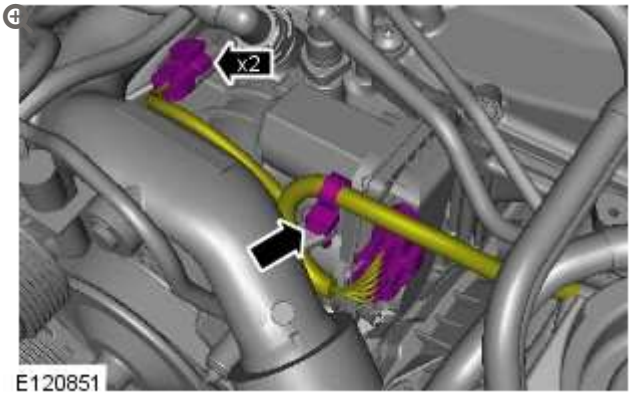

17.

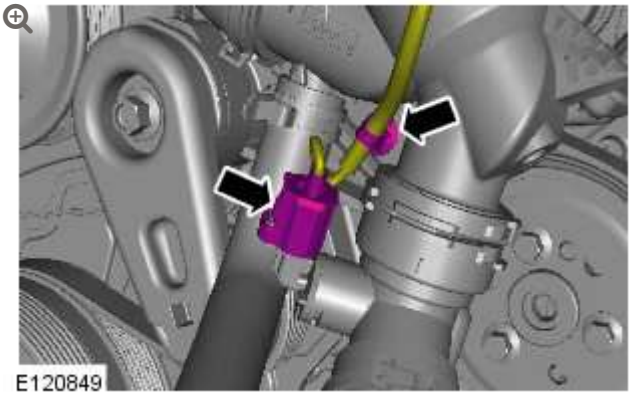

18.

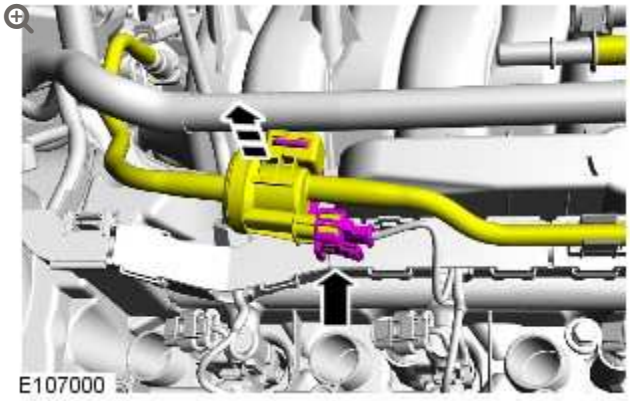

19.

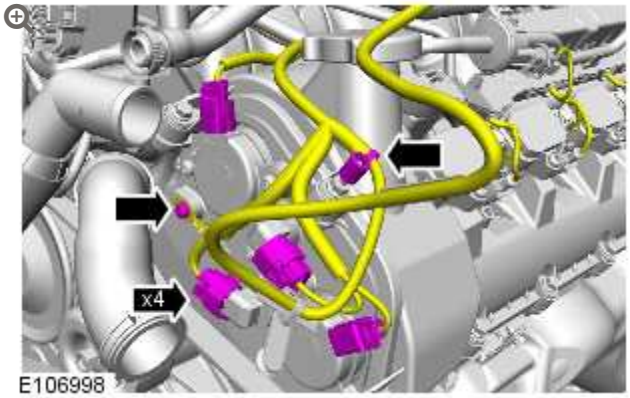

Torque: **10 Nm**

20.

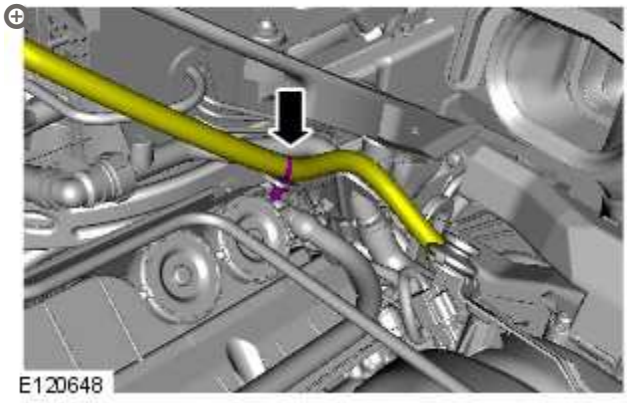

21.

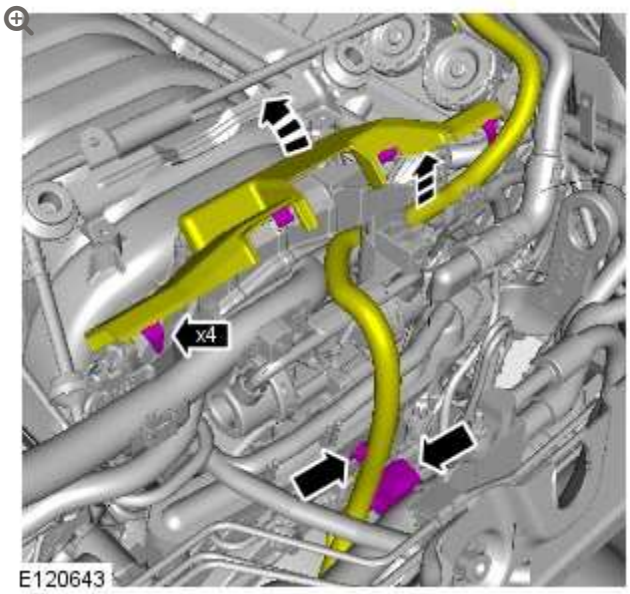

22.

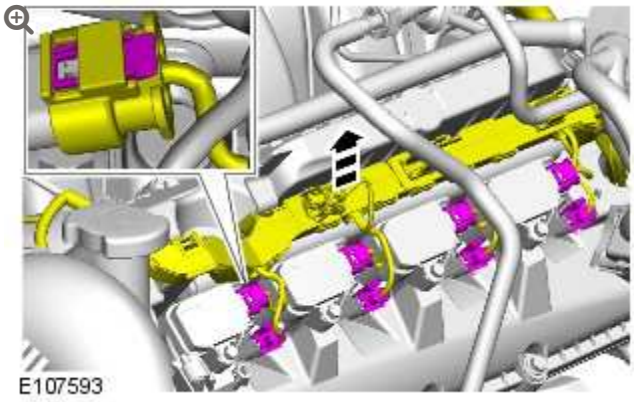

23.

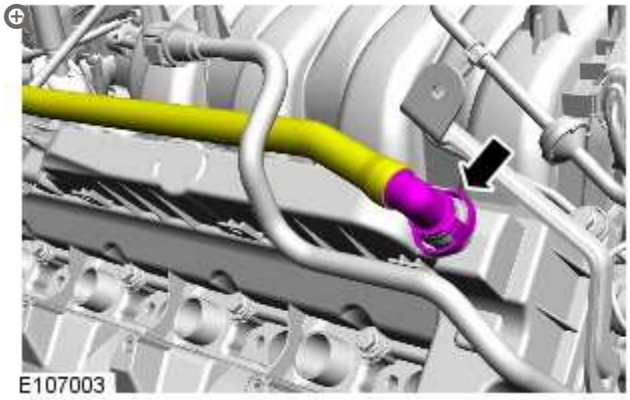

24.

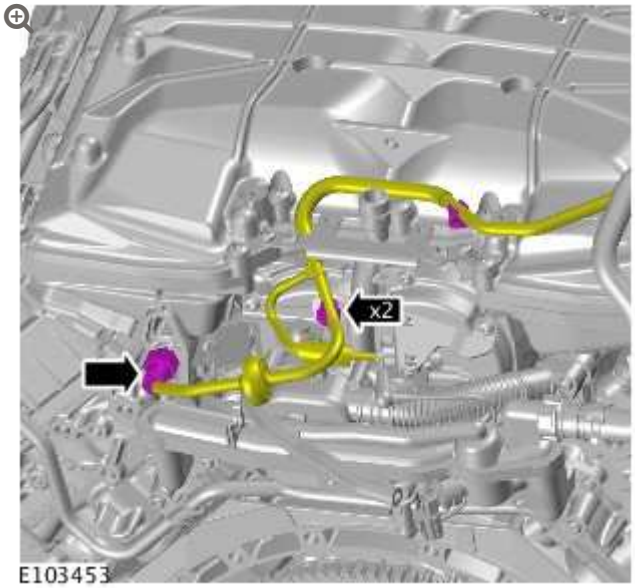

25.

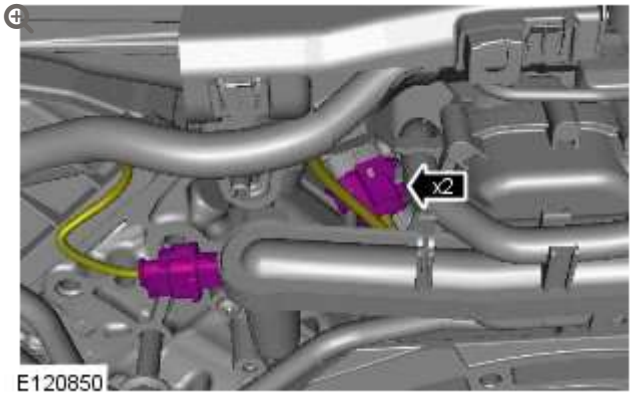

26.

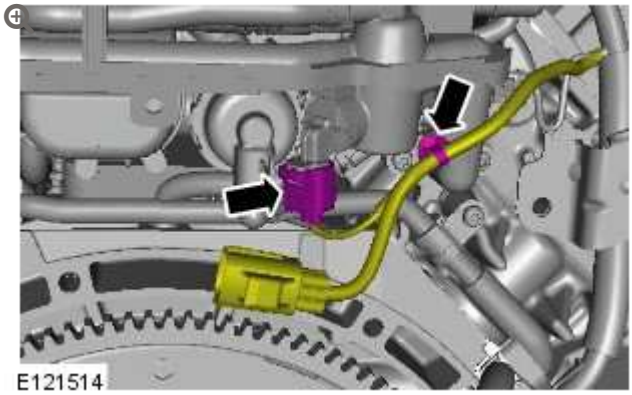

27.

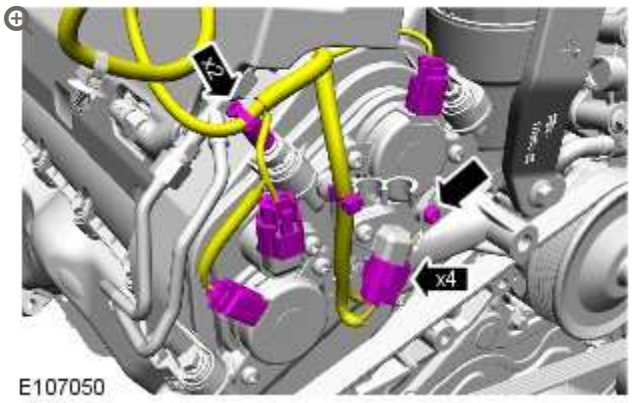

Torque: **10 Nm**

28.

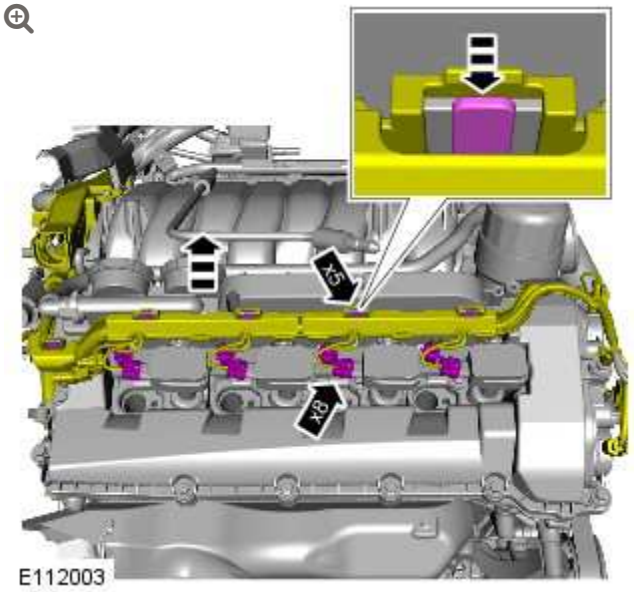

29.

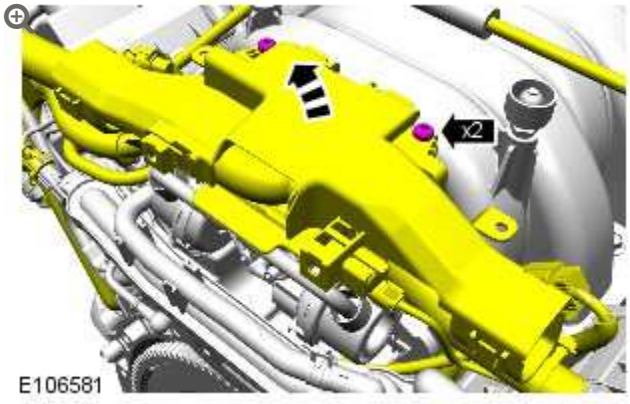

Torque: **6 Nm**

30.

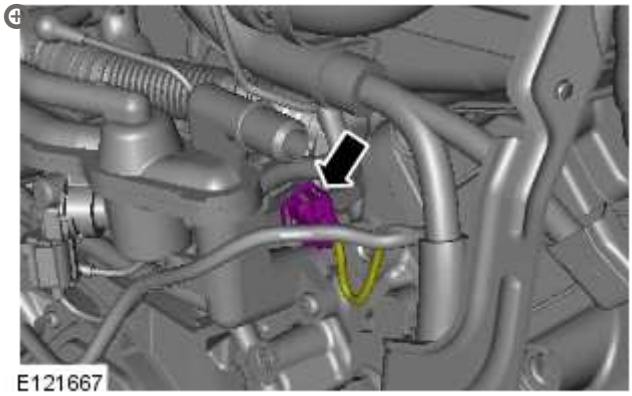

31.

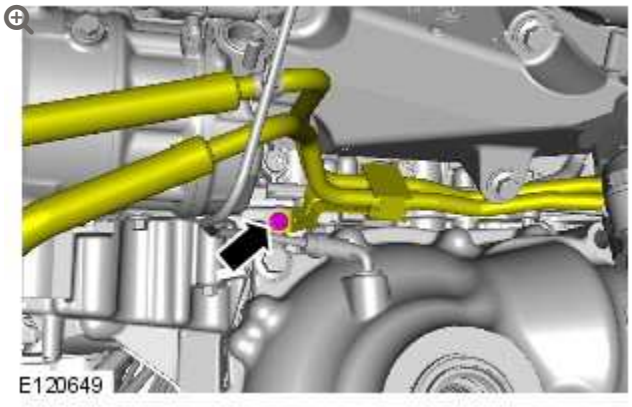

Torque: **10 Nm**

32.

NOTE:

RHD illustration shown, LHD is similar.

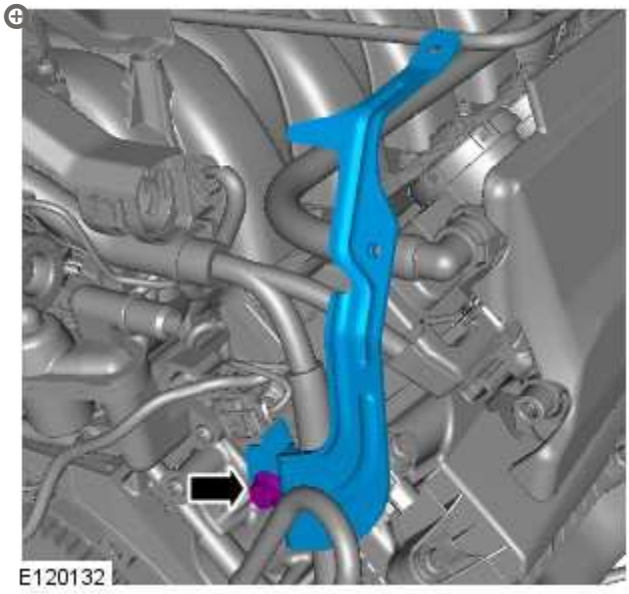

Torque: **47 Nm**

33.

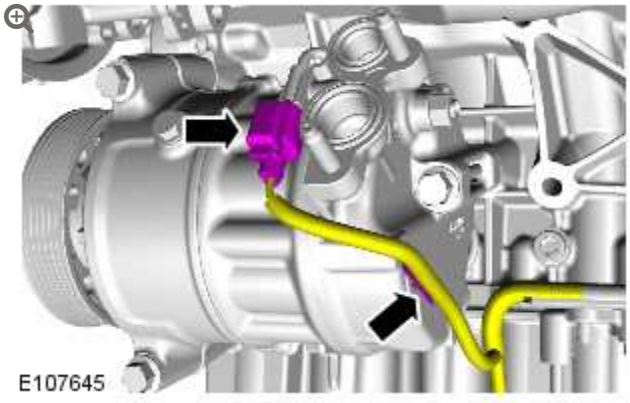

34.

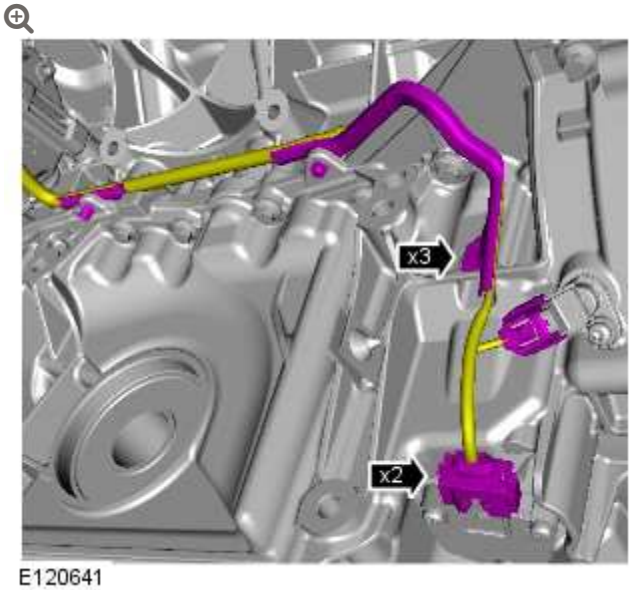

E120641

35.

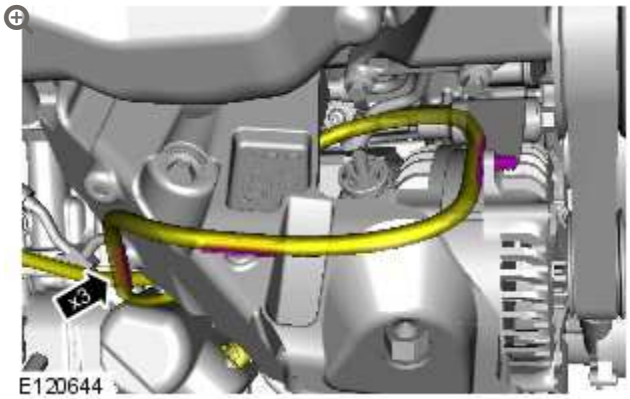

E120644

36.

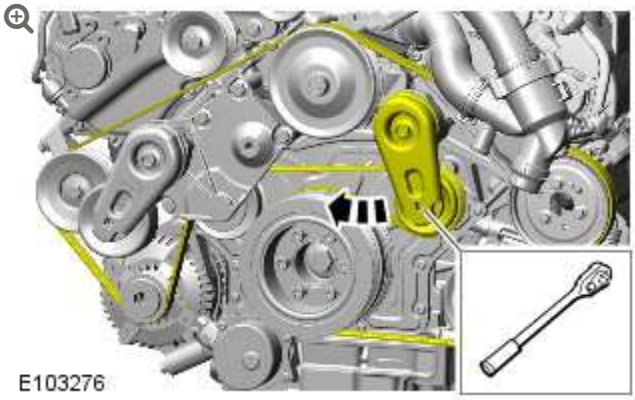
E103276

37.

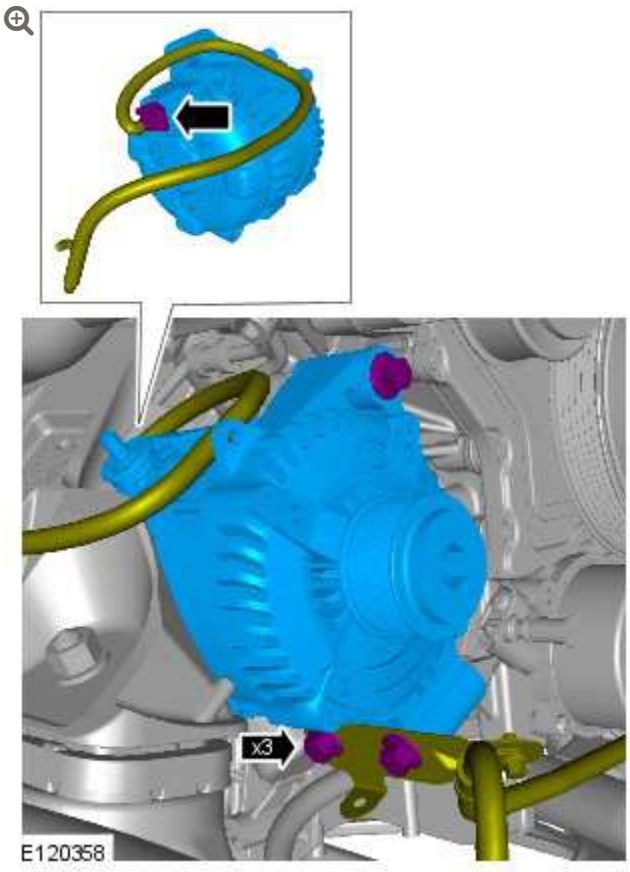

Torque: **48 Nm**

38.

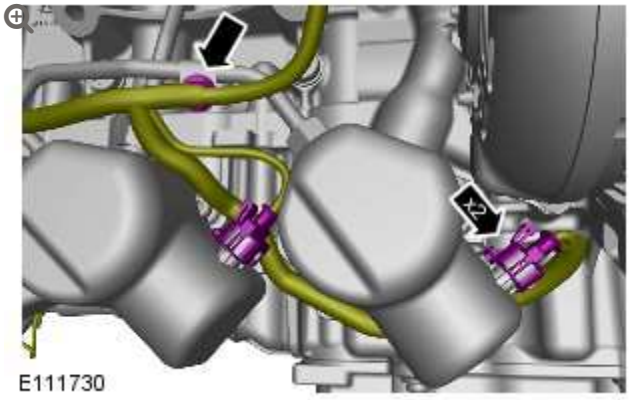

39.

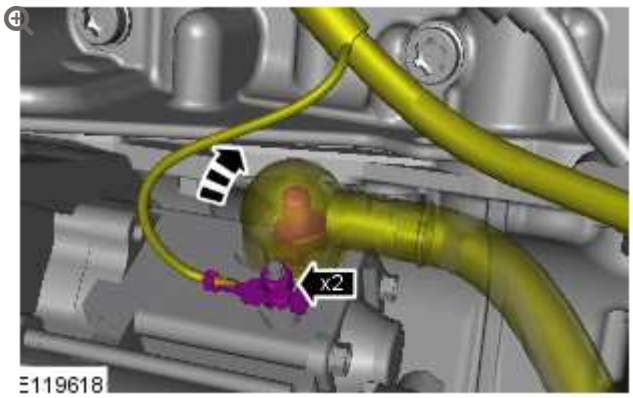

Torque:

M8 **10 Nm**

M6 **4 Nm**

40.

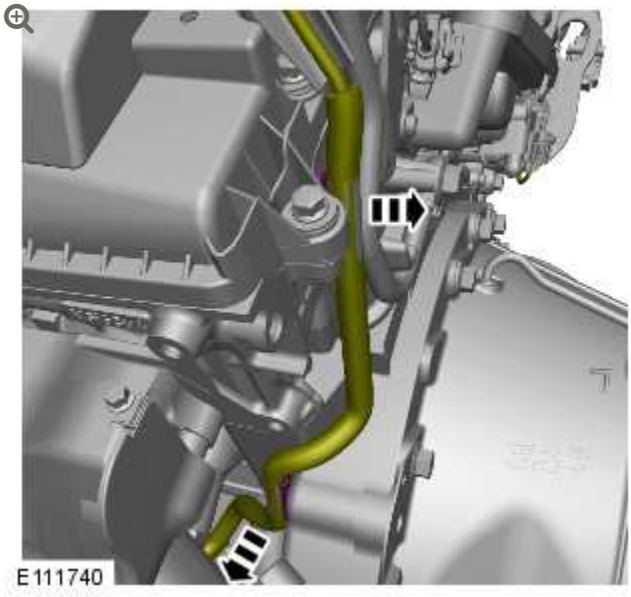

41.

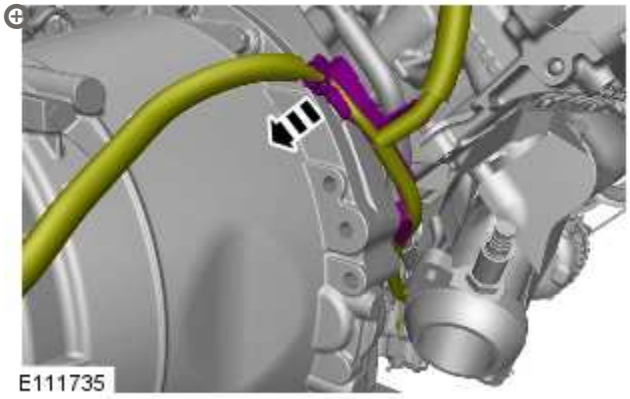

42.

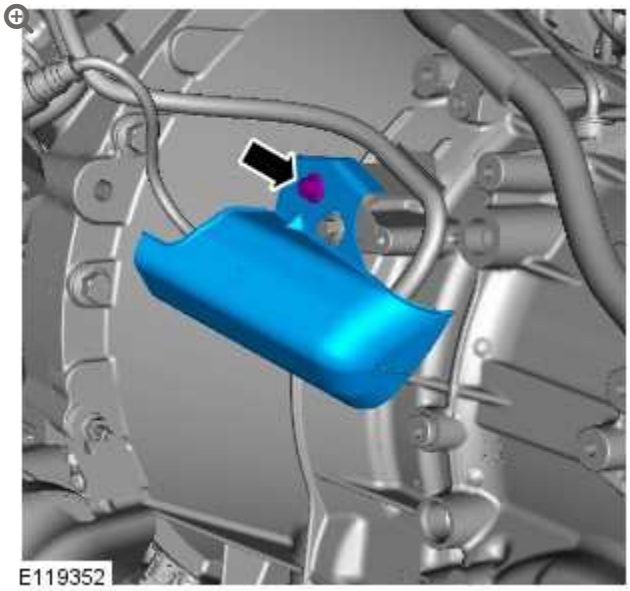

Torque: **10 Nm**

43.

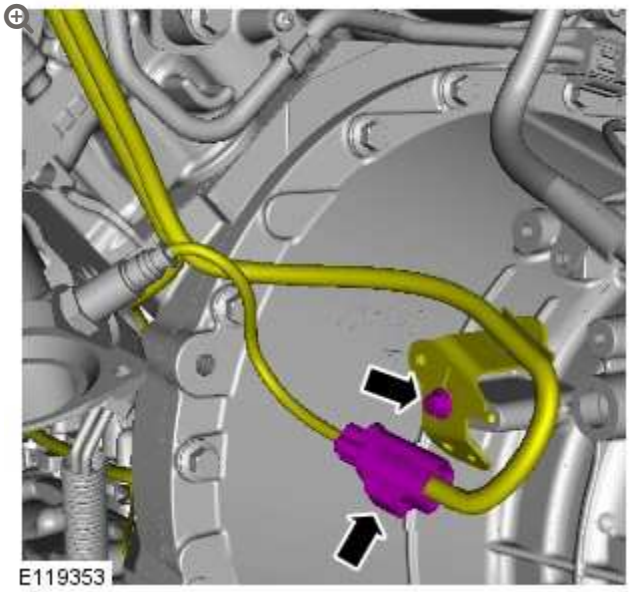

Torque: **10 Nm**

44.

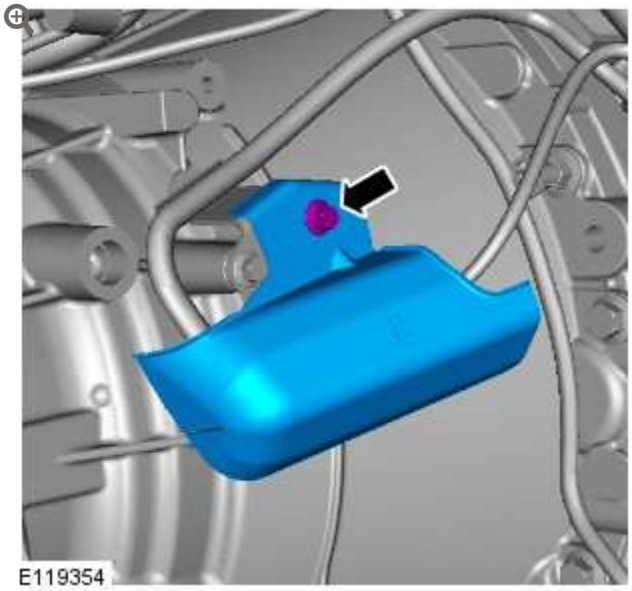

Torque: **10 Nm**

45.

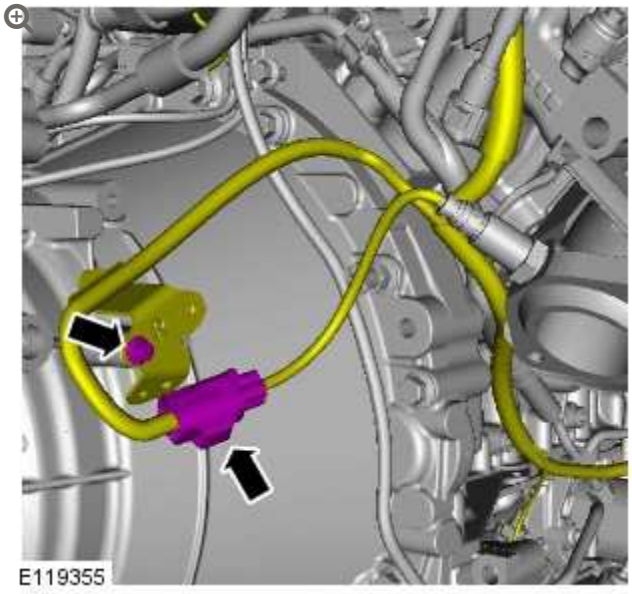

Torque: **10 Nm**

46.

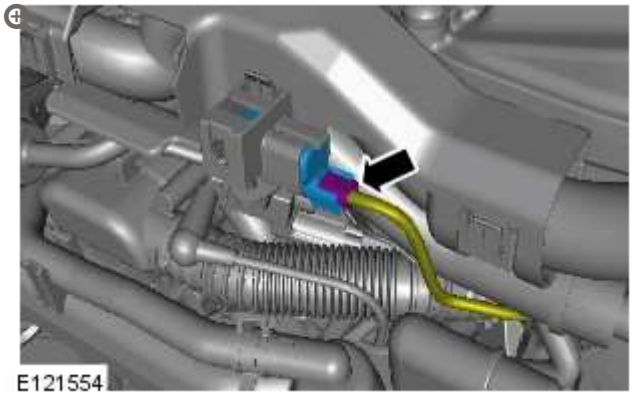

47.

NOTE:

RHD illustration shown, LHD is similar.

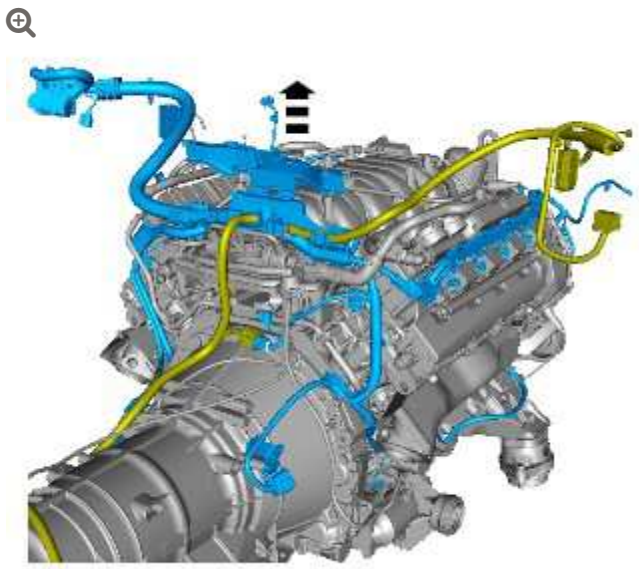

E120638

INSTALLATION

1. **NOTE:**

> After the engine harness has been installed, test using Land Rover/ Jaguar approved diagnostic equipment.

To install, reverse the removal procedure.

WIRING HARNESSES

FRONT PARKING AID CAMERA WIRING HARNESS – BUMPER SECTION (G1429571)

REMOVAL AND INSTALLATION

REMOVAL

1. **WARNING:**

   Make sure to support the vehicle with axle stands.

   Raise and support the vehicle.

2. Remove the front bumper cover.
   For additional information, refer to: Front Bumper Cover (501-19 Bumpers, Removal and Installation).

3.

NOTES:

- Some variation in the illustrations may occur, but the essential information is always correct.
- Right-hand shown, left-hand similar.

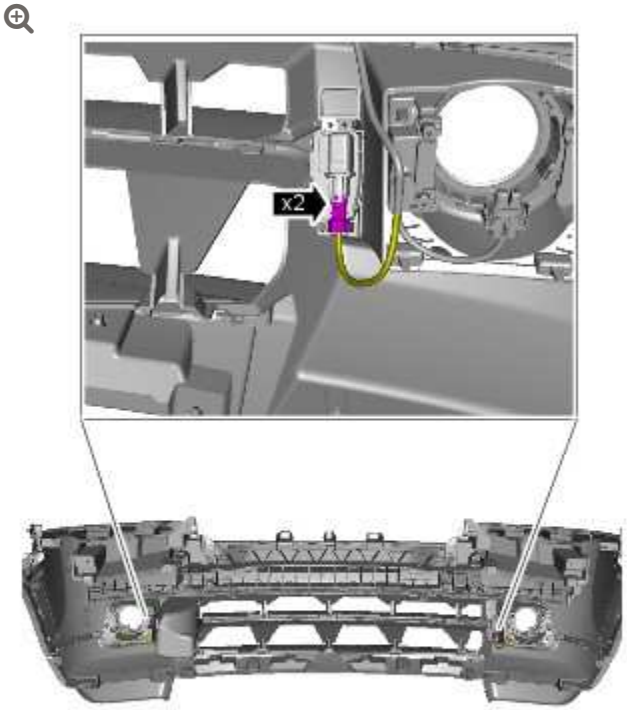

E136471

Disconnect the electrical connector.

INSTALLATION

1.

CAUTION:

Make sure that the camera overlay wiring harness is not bent excessively during this procedure. Failure to follow this instruction may result in damage to the harness.

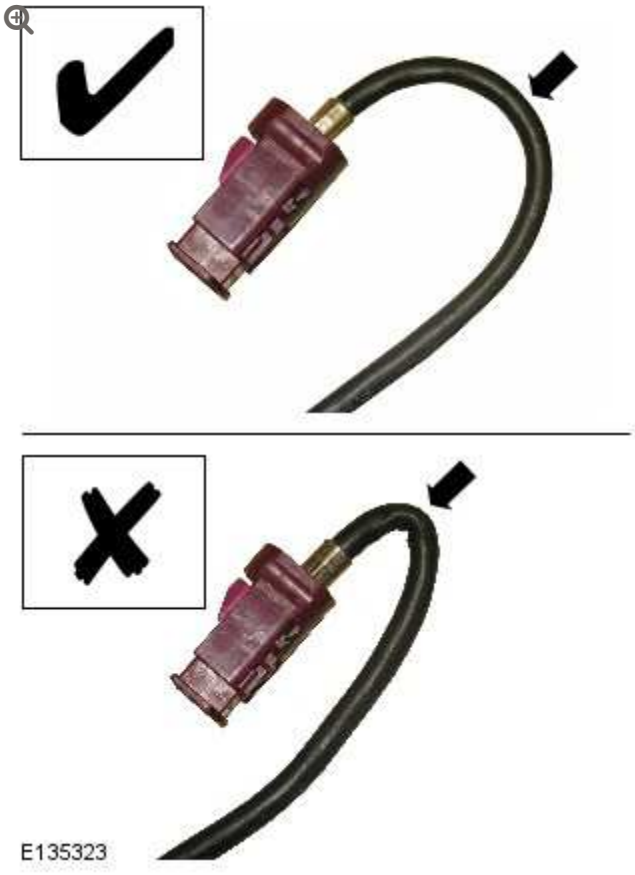

Install the wiring harness

2.

NOTES:

- Some variation in the illustrations may occur, but the essential information is always correct.
- Right-hand shown, left-hand similar.

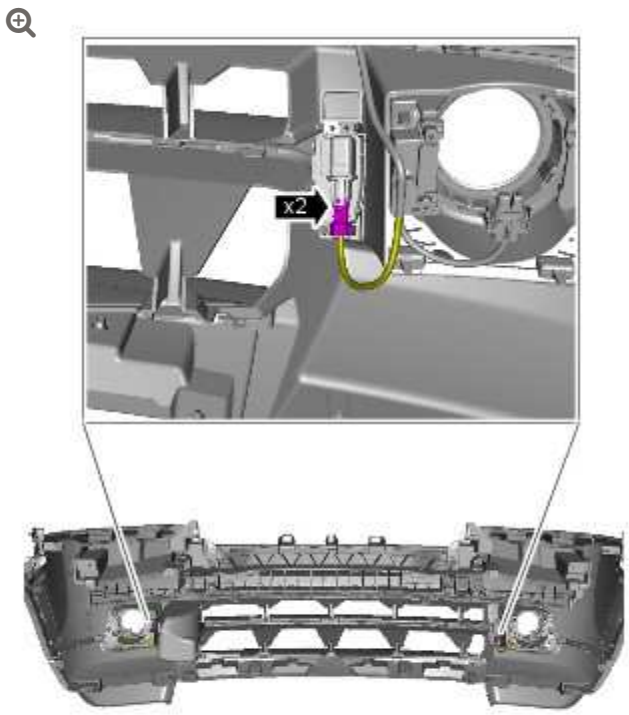

E136471

Connect the electrical connector.

3. **CAUTION:**

   Make sure that excessive force is not used when installing the tie straps to the wiring harness. Failure to follow this instruction may result in damage to the vehicle.

   Using suitable tie straps, secure the camera overlay wiring harness to the bumper wiring harness.

4. Install the front bumper cover.
   For additional information, refer to: Front Bumper Cover (501-19 Bumpers, Removal and Installation).

WIRING HARNESSES

FRONT PARKING AID CAMERA WIRING HARNESS – FRONT SECTION (G1371948)

REMOVAL AND INSTALLATION

REMOVAL

CAUTION:

Make sure that the camera overlay wiring harness is not bent excessively during this procedure. Failure to follow this instruction may result in damage to the harness.

1. **WARNING:**

   Make sure to support the vehicle with axle stands.

   Raise and support the vehicle.

2. Remove the RH front wheel.

3. Remove the front RH wheel arch liner.
   For additional information, refer to: Fender Splash Shield (501-02 Front End Body Panels, Removal and Installation).

4. **NOTE:**

   Left-hand shown, right-hand similar.

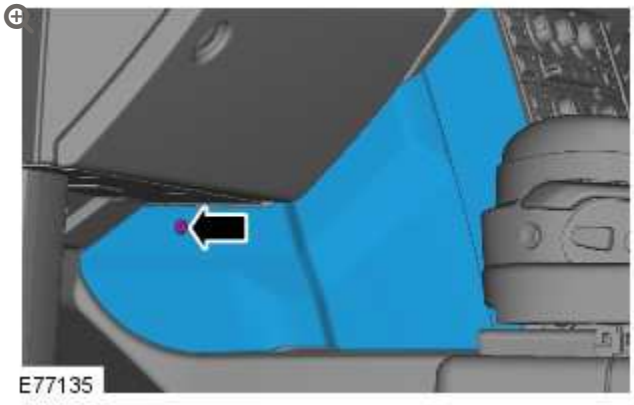

Remove the right hand floor console extension.

- Remove the screw.
- Release the 2 clips.

5. **NOTE:**

   Left-hand shown, right-hand similar.

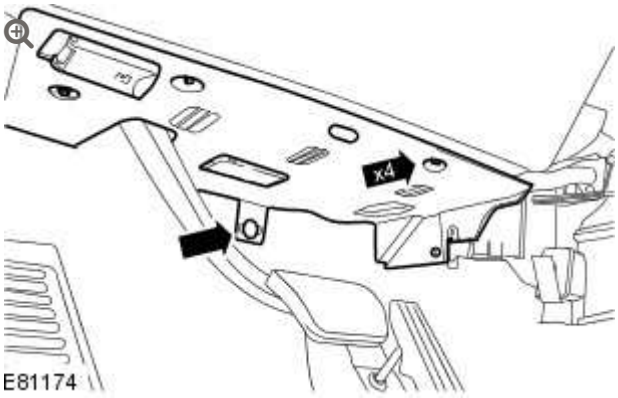

Release the right hand closing trim panel.

- Remove the 4 screws.
- Remove the clip.

6.

NOTE:

Left-hand shown, right-hand similar.

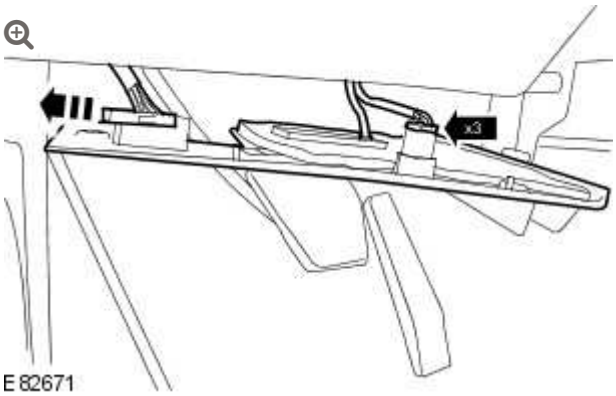

Remove the right hand closing trim panel.

- Disconnect the 2 electrical connectors.
- Release the vehicle diagnostic socket.

7.

NOTE:

Right hand drive vehicles only.

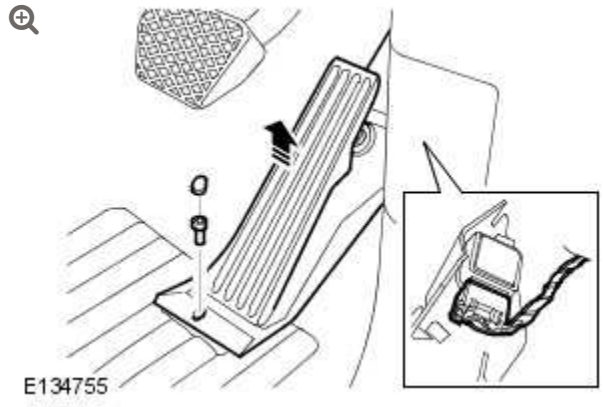

Remove the throttle pedal assembly.

- Remove the bolt cover.
- Remove the bolt.
- Disconnect the electrical connector.

8.

NOTE:

All vehicles.

Remove the cowl side trim panel. For additional information, refer to: Cowl Side Trim Panel (501-05 Interior Trim and Ornamentation, Removal and Installation).

9.

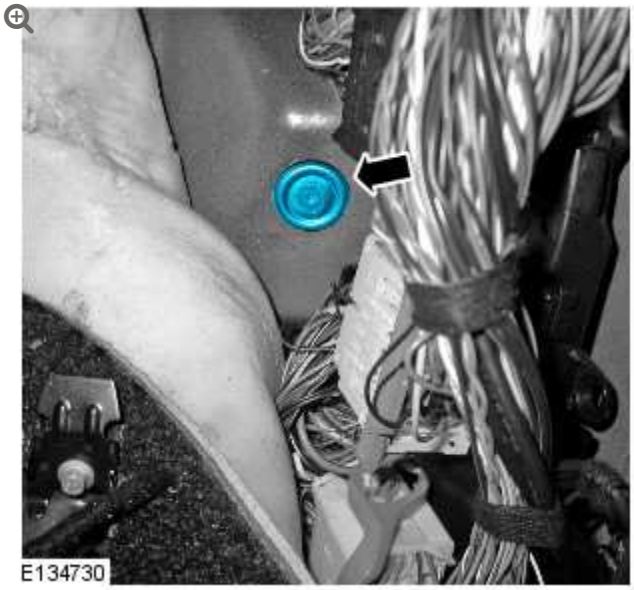

Remove the grommet.

- Reposition the floor carpet.

10.

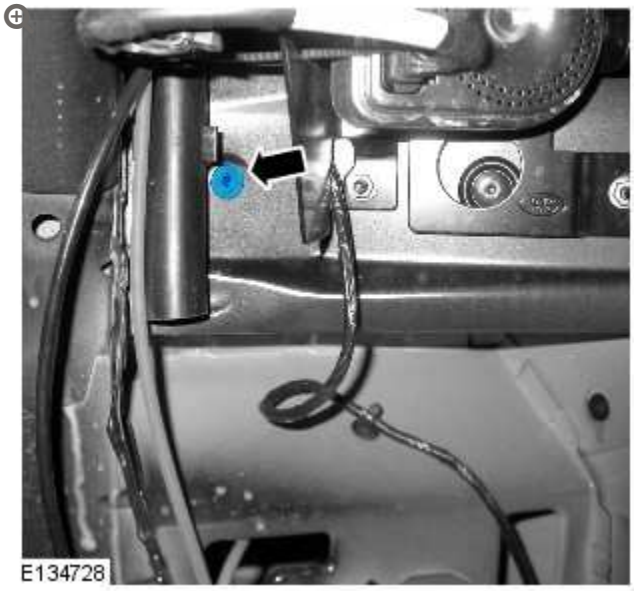

Remove the grommet.

11.

NOTE:

The left hand front camera wiring harness connectors are coloured white, the right hand front camera wiring harness connectors are coloured black.

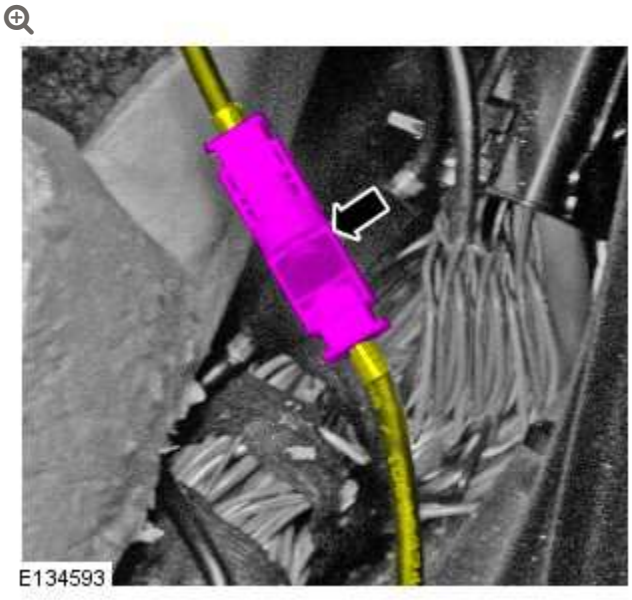

Disconnect the camera wiring harness.

12.

NOTE:

The left hand front camera wiring harness connectors are coloured white, the right hand front camera wiring harness connectors are coloured black.



Disconnect the camera wiring harness.

13.

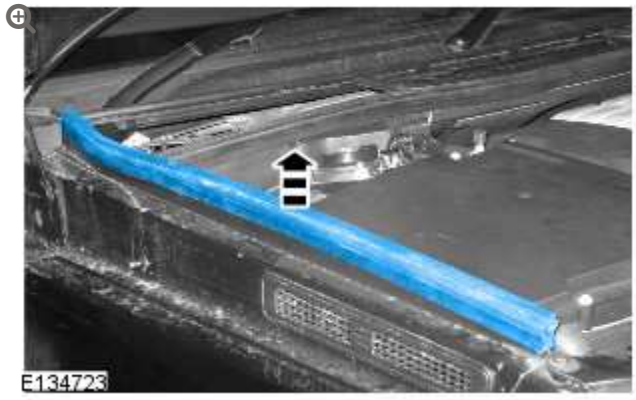

Remove the hood seal.

14.



Release the hood seal.

INSTALLATION

1.

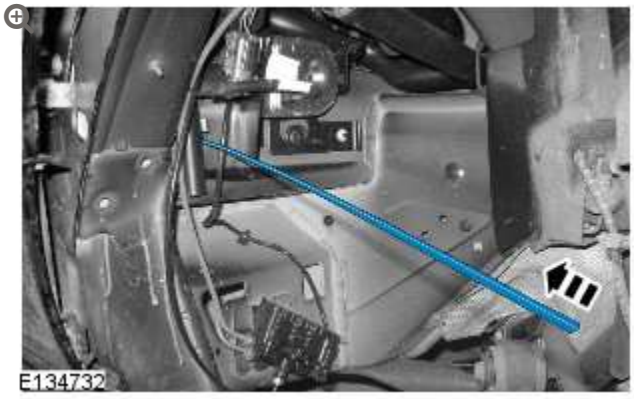

Install a suitable rod through the both holes.

2.

NOTE:

Some variation in the illustrations may occur, but the essential information is always correct.

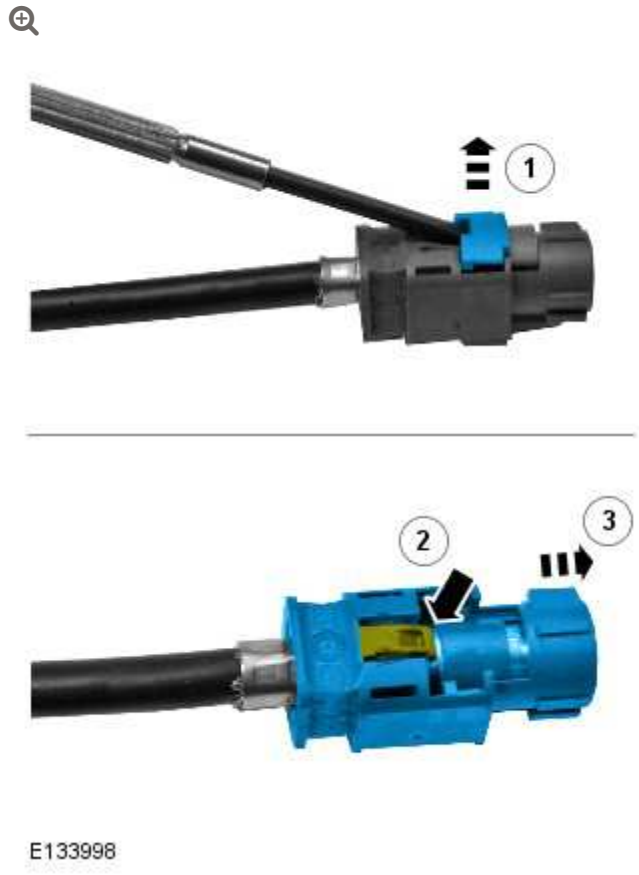

E133998

Remove the connectors from the camera overlay wiring harness.

- Remove the locking tab.
- Carefully release the clip.
- Apply suitable tape to protect the end of the camera overlay wiring harness.

3.

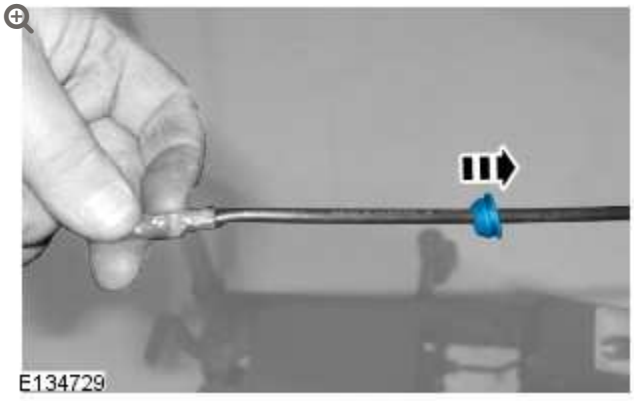

Using a suitable tool, install the grommet to the camera overlay wiring harness.

- Using a suitable tool, make a hole in the centre of the grommet.

4.

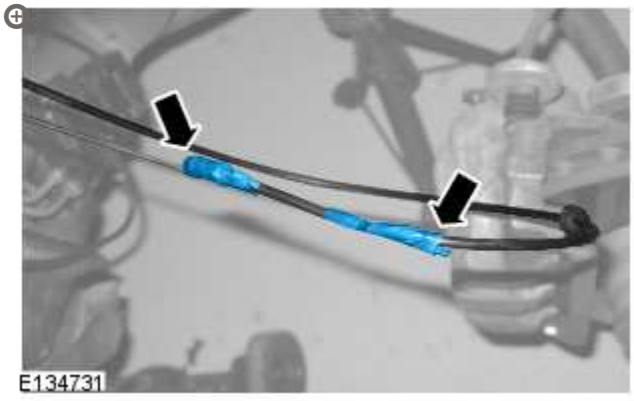

Using suitable tape, secure the camera overlay wiring harness to the end of the rod in the wheel arch area.

5.

CAUTION:

Make sure that the camera overlay wiring harness is not bent excessively during this procedure. Failure to follow this instruction may result in damage to the harness.



Install the camera overlay wiring harness.

6.

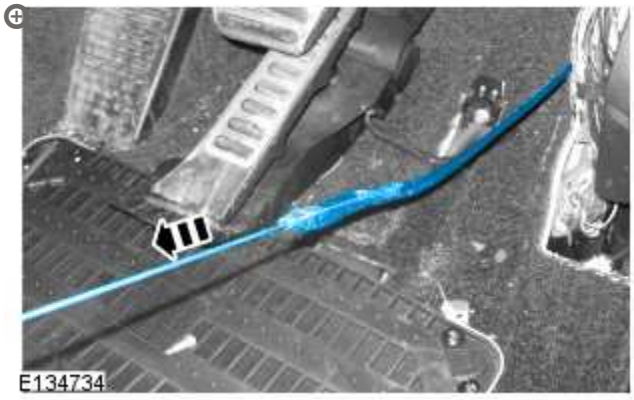

Install the camera overlay wiring harness through the 2 holes.

- Carefully pull the rod through in to the foot well area until the camera overlay wiring harness is through both holes.
-

Release the rod from the camera overlay wiring harness.

7.

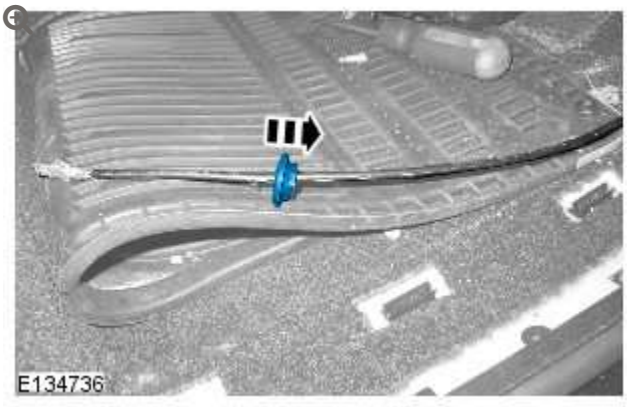

Using a suitable tool, install the grommet to the camera overlay wiring harness.

- Using a suitable tool, make a hole in the centre of the grommet.

8.

NOTE:

Some variation in the illustrations may occur, but the essential information is always correct.

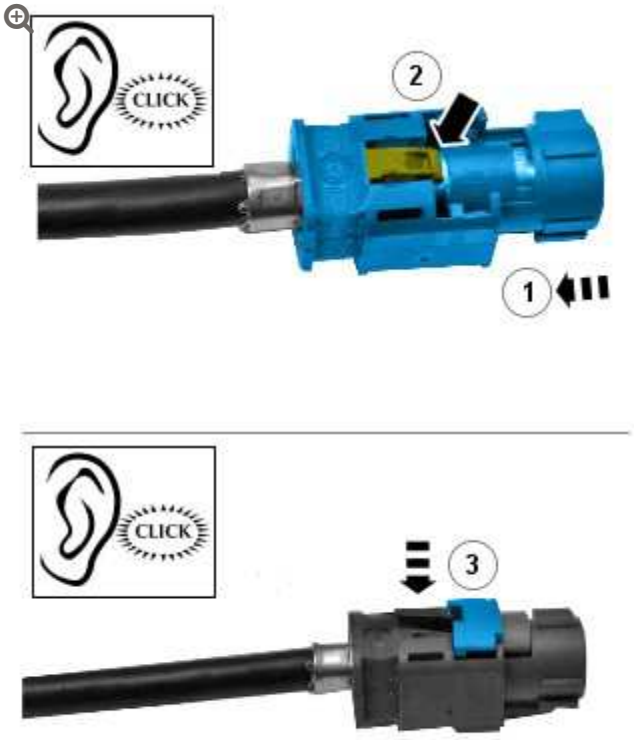

E134007

Install the connector to the camera overlay wiring harness.

- Remove the protective tape.
- Install the electrical connector.
- Secure the locking tab.

9.

NOTE:

The left hand front camera wiring harness connectors are coloured white, the right hand front camera wiring harness connectors are coloured black.

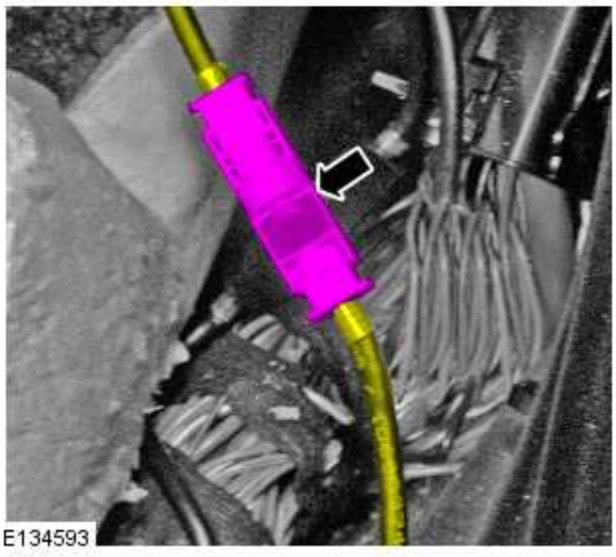

Connect the camera overlay wiring harness.

10.

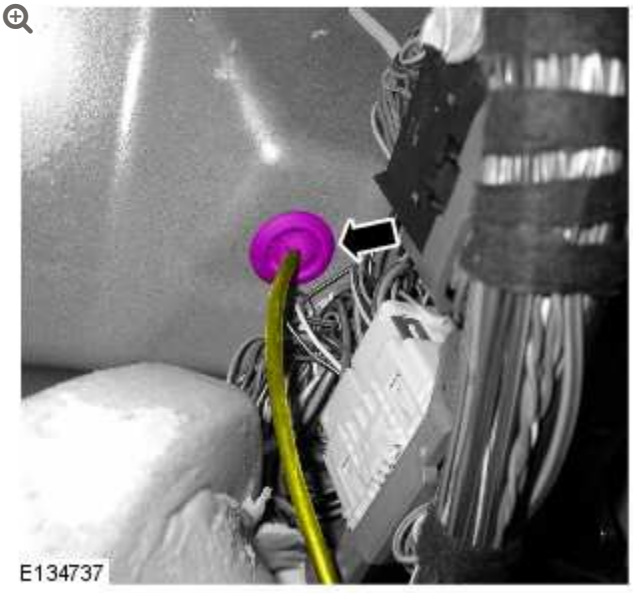

Secure the grommet.

11.

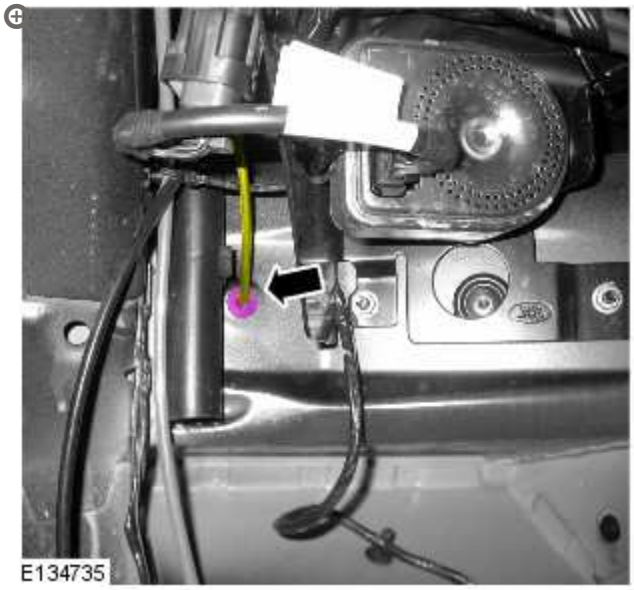

Secure the grommet.

12.

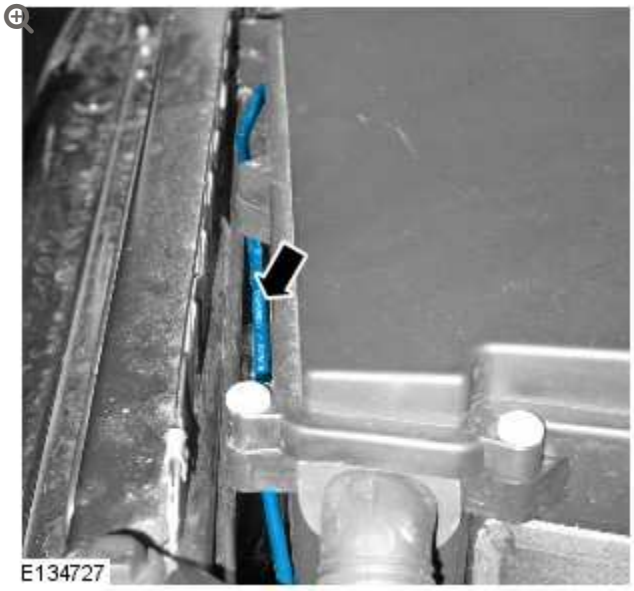

Feed the camera overlay wiring harness along the existing engine compartment wiring harness to the RH front of the bumper.

13.



Release the bracket.

- Remove the nut.
- Release the nut.

14.

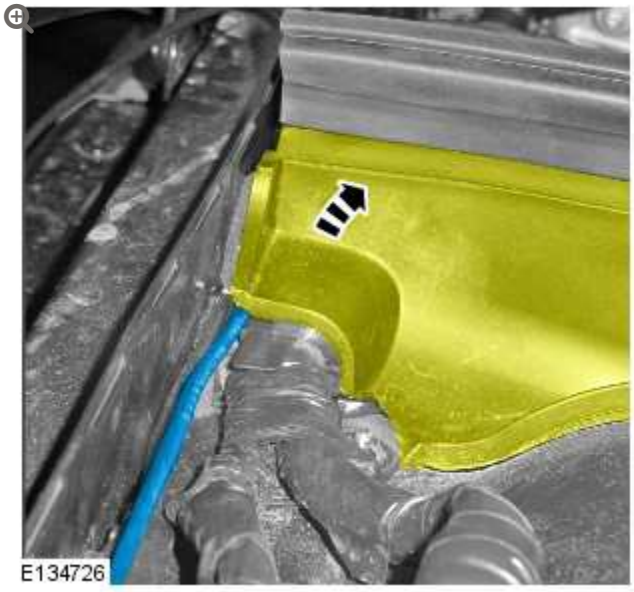

Carefully feed the camera overlay wiring harness under the bracket.

15.



Secure the bracket.

- Tighten the nuts.

16.



Secure the hood seal.

17.



Install the hood seal.

18.



Connect the camera overlay wiring harness.

19.

CAUTION:

Make sure that any tie straps used are not tightened excessively on the camera wiring harness and link leads, Failure to follow this instruction may result in damage to the harness.

Using suitable tie straps, secure the camera overlay wiring harness to the main body wiring harness.

20.

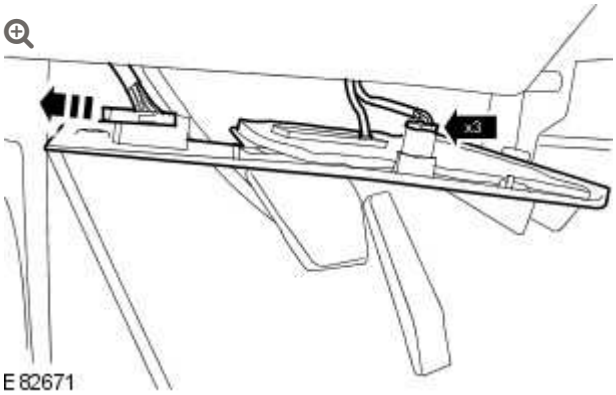

Install the right hand closing trim panel.

- Secure the vehicle diagnostic socket.
- Connect the 2 electrical connectors.

21.

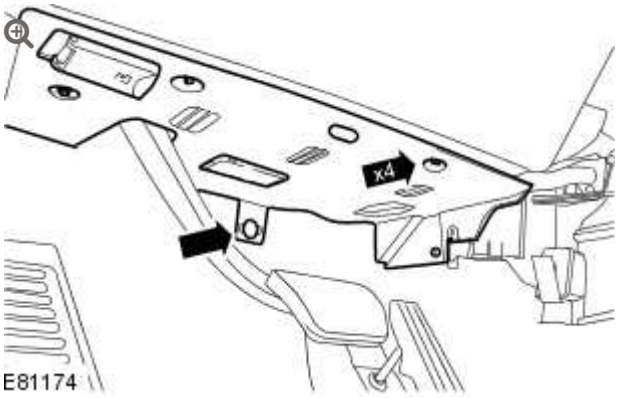

Secure the right hand closing trim panel.

- Secure the clip.
- Install the 4 screws.

22.

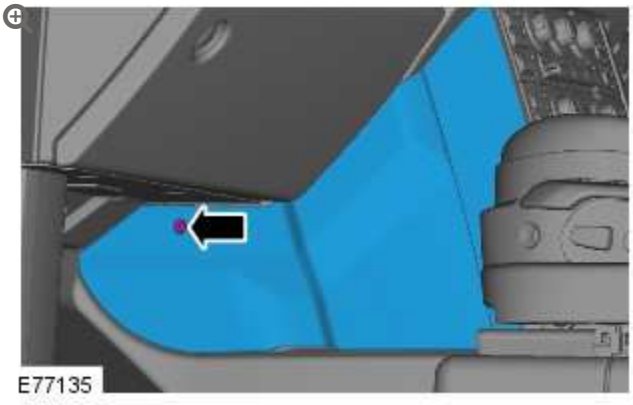

Install the right hand floor console extension.

- Secure the 2 clips.
- Install the screw.

23. Install the cowl side trim panel. For additional information, refer to: Cowl Side Trim Panel (501-05 Interior Trim and Ornamentation, Removal and Installation).

24.

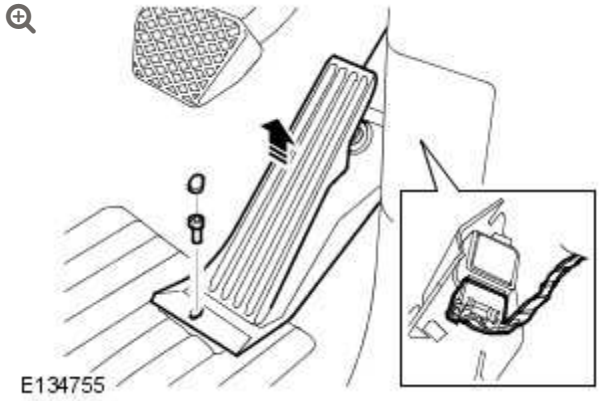

Install the pedal assembly.

- Connect the electrical connector.
- Install and tighten the bolt.
- Install the bolt cover.

25. Install the front RH wheel arch liner.

26. Install the RH front wheel.

WIRING HARNESSES

FRONT PARKING AID CAMERA WIRING HARNESS – MAIN BODY SECTION (G1371952)

REMOVAL AND INSTALLATION

REMOVAL

CAUTION:

Make sure that the camera overlay wiring harness is not bent excessively during this procedure. Failure to follow this instruction may result in damage to the harness.

1. Remove the LH B-pillar trim panel.
   For additional information, refer to: B-Pillar Trim Panel (501-05 Interior Trim and Ornamentation, Removal and Installation).

2. Repeat procedure for the other side.

3.

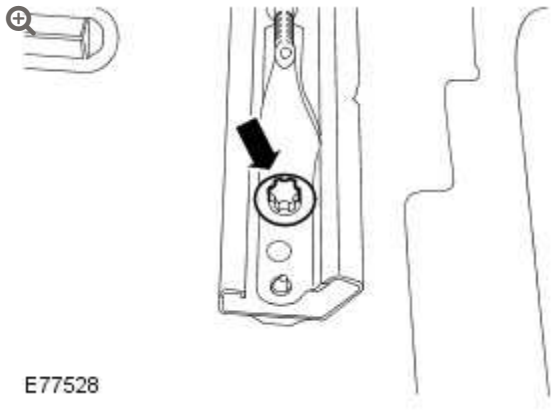

Remove the 2 rear bolts from the LH front seat.

4.

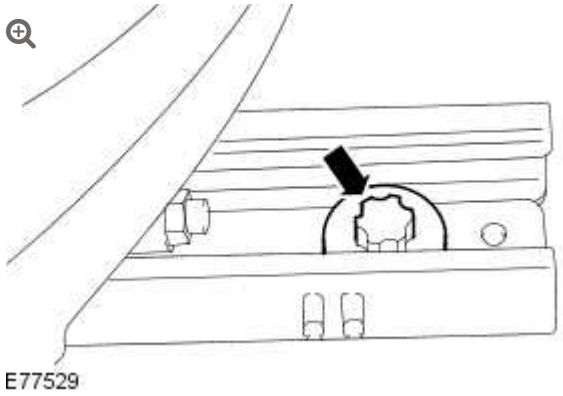

Release the LH front seat.

- Move the LH front seat fully backwards.
- Remove the 2 front seat front bolts.

5. Remove the RH front seat.
   For additional information, refer to: Front Seat (501-10 Seating, Removal and Installation).

6.

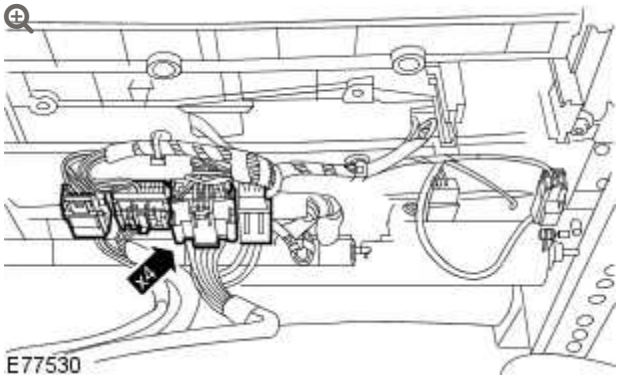

With assistance remove the LH front seat.

- Disconnect the 4 electrical connectors.

7.

NOTE:

Left-hand shown, right-hand similar.

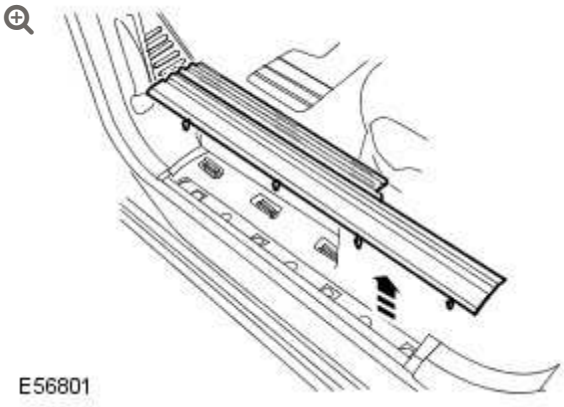

Remove the front scuff plate trim panel.

- Release the 7 clips.
- Repeat to the other side.

8.

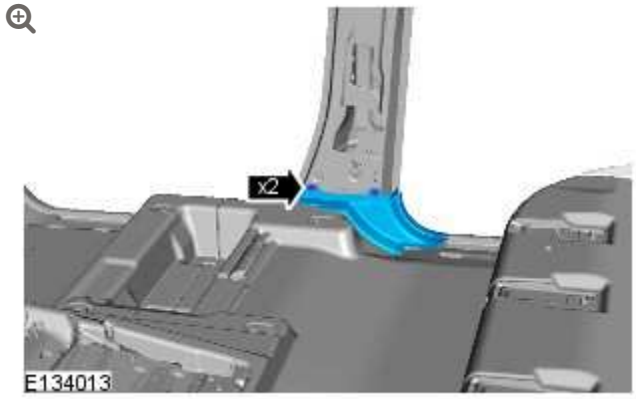

Remove the B-pillar floor covering trim panel.

- Remove the 2 clips.
- Repeat to the other side.

9.

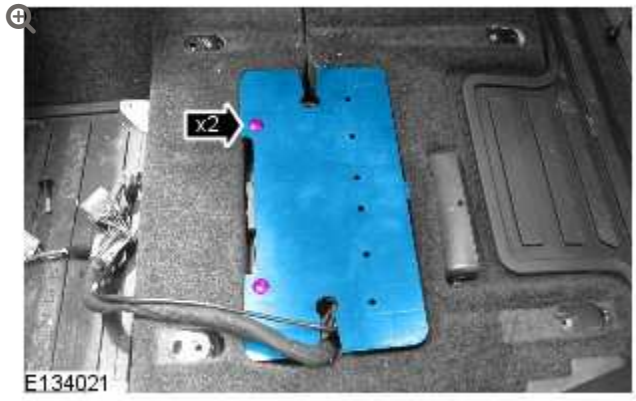

Remove the parking aid camera module cover.

- Remove the 2 scrivets.
- Repeat to the other side.

10.

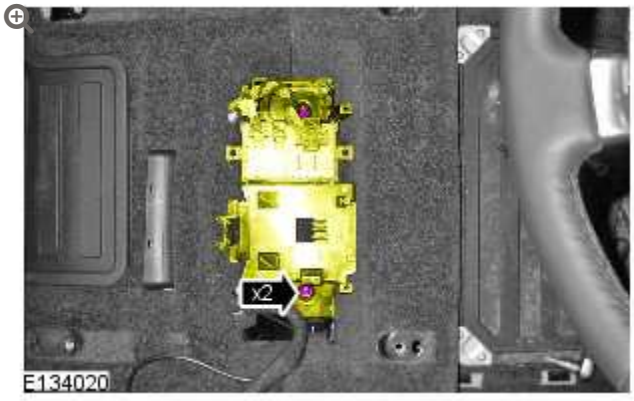

Release the seat heating module bracket.

- Remove the 2 nuts.

11.

NOTE:

Left hand shown, right hand similar.



Remove the RH wiring harness cover.

- Remove the 3 clips.

12.

Remove the A-pillar trim panel. For additional information, refer to: A-Pillar Trim Panel (501-05 Interior Trim and Ornamentation, Removal and Installation).

13.

NOTE:

The left hand front camera wiring harness connectors are coloured white, the right hand front camera wiring harness connectors are coloured black.

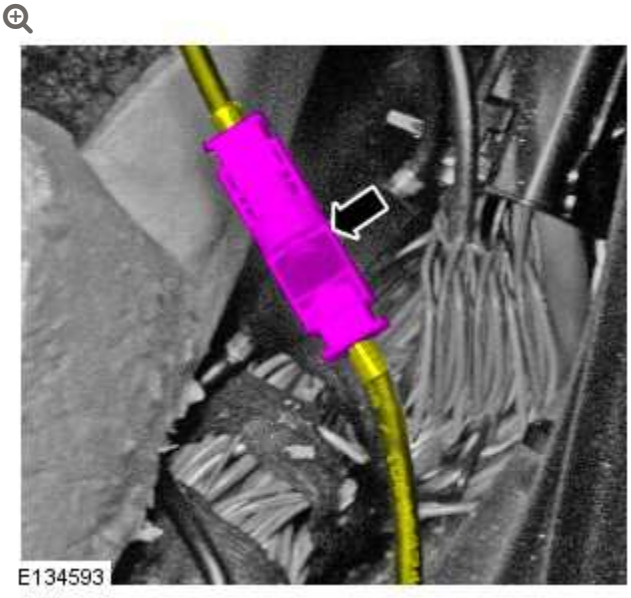

Disconnect the parking aid camera wiring harness.

14.

NOTE:

The left hand front camera wiring harness connectors are coloured white, the right hand front camera wiring harness connectors are coloured black.

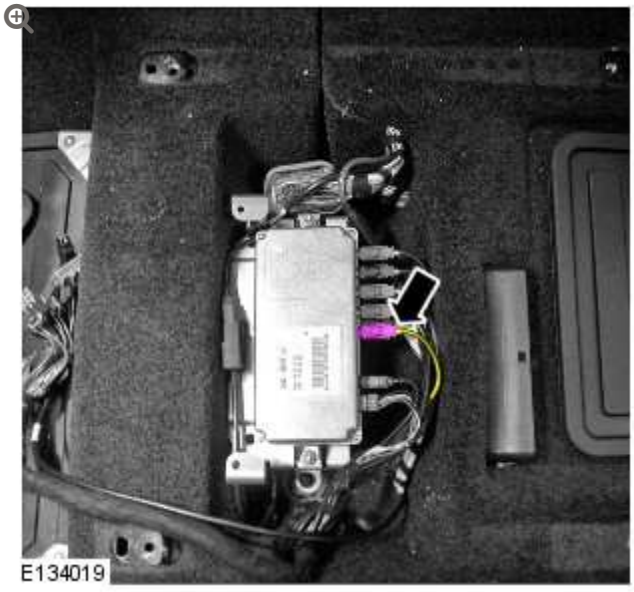

Disconnect the parking aid camera wiring harness.

INSTALLATION

1.

NOTE:

Some variation in the illustrations may occur, but the essential information is always correct.

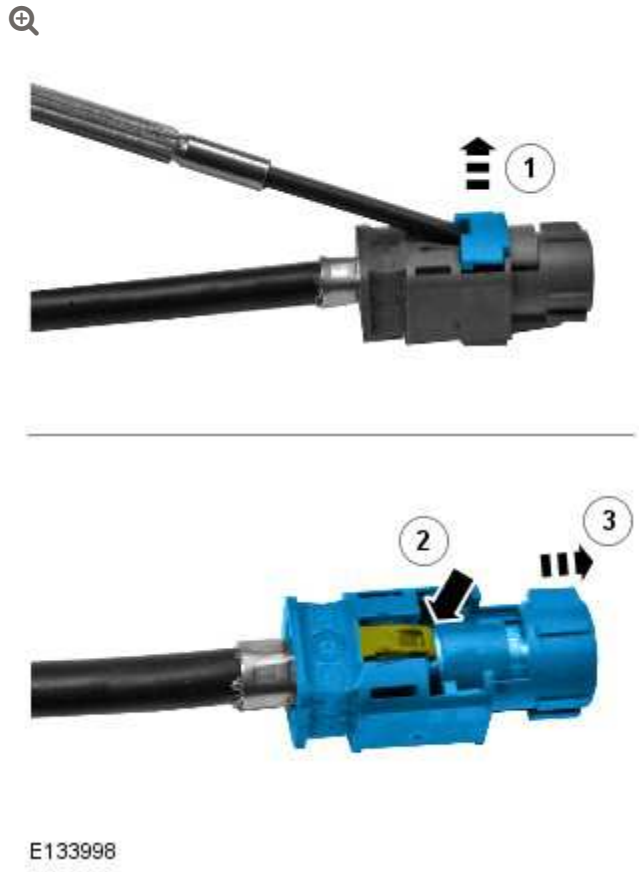

E133998

Remove the connector from the module end of the camera overlay wiring harness.

- Remove the locking tab.
- Carefully release the clip.
- Apply suitable tape to protect the end of the camera overlay wiring harness.

2.

CAUTION:

Make sure that the camera overlay wiring harness is not bent excessively during this procedure. Failure to follow this instruction may result in damage to the harness.



Install the camera overlay wiring harness.

3.

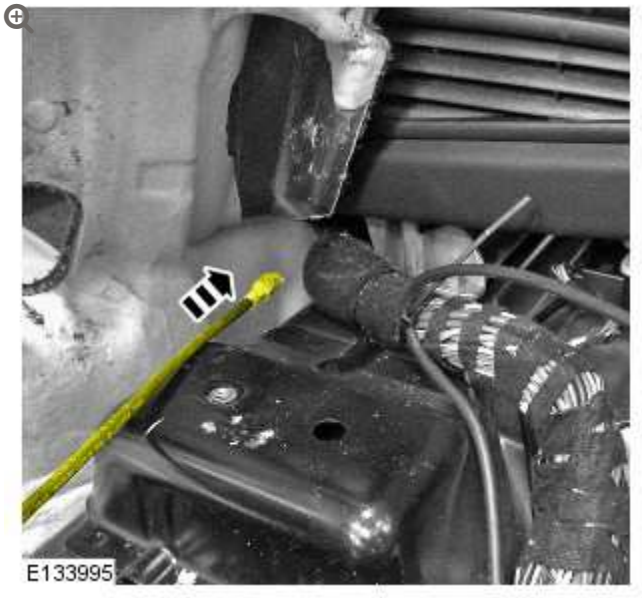

Insert the camera wiring harness under the floor console.

- Route the camera overlay wiring harness along the main body wiring harness up to the camera module.

4.

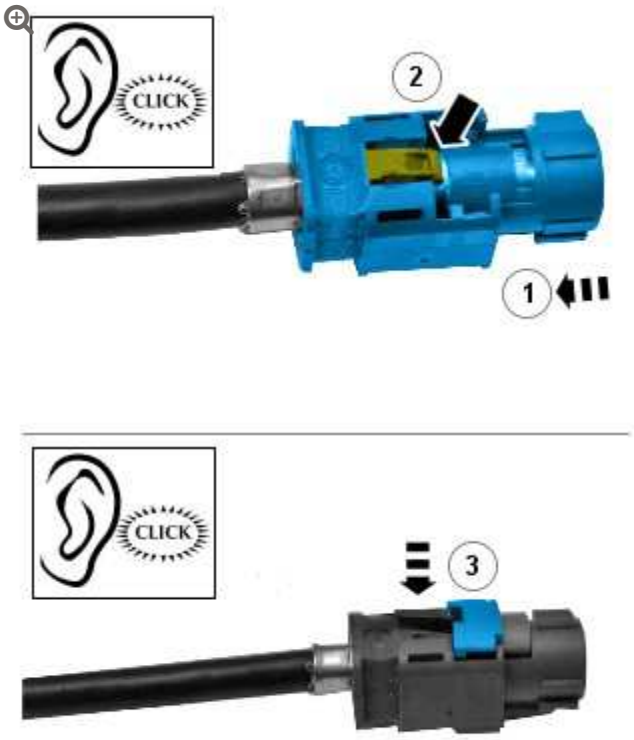

Install the connector to the camera overlay wiring harness.

- Remove the protective tape.
- Install the electrical connector.
- Secure the locking tab.

5.

NOTE:

The left hand front camera wiring harness connectors are coloured white, the right hand front camera wiring harness connectors are coloured black.

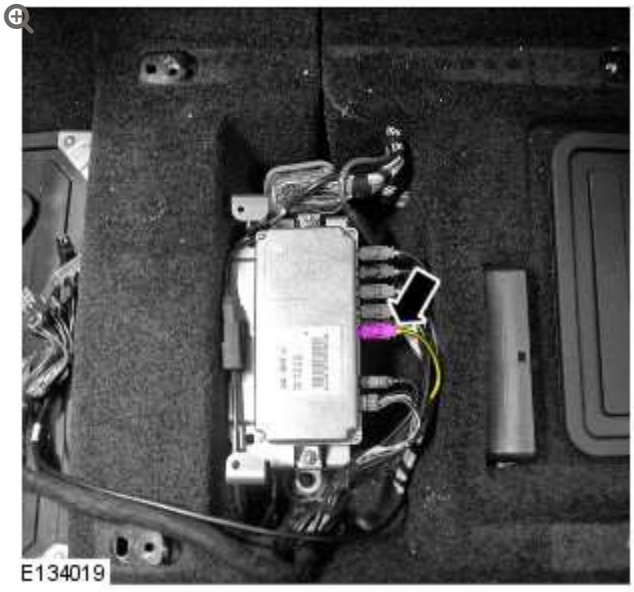

Connect the camera overlay wiring harness.

6.

CAUTION:

Make sure that any tie straps used are not tightened excessively on the camera wiring harness and link leads, Failure to follow this instruction may result in damage to the harness.



Using suitable tie straps, secure the camera overlay wiring harness to the main body wiring harness.

7. **NOTE:**

The left hand front camera wiring harness connectors are coloured white, the right hand front camera wiring harness connectors are coloured black.

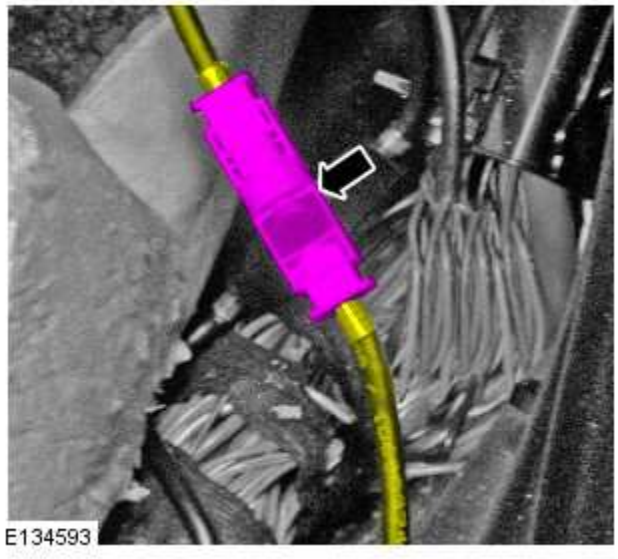

Connect the camera overlay wiring harness.

8. Install the A-pillar trim panel. For additional information, refer to: A-Pillar Trim Panel (501-05 Interior Trim and Ornamentation, Removal and Installation).

9. **NOTE:**

Left hand shown, right hand similar.

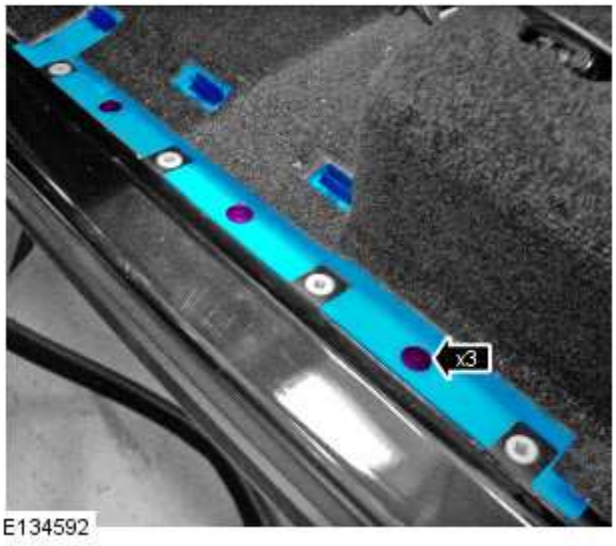

Install the RH wiring harness cover.

- Secure the 3 clips.

10.

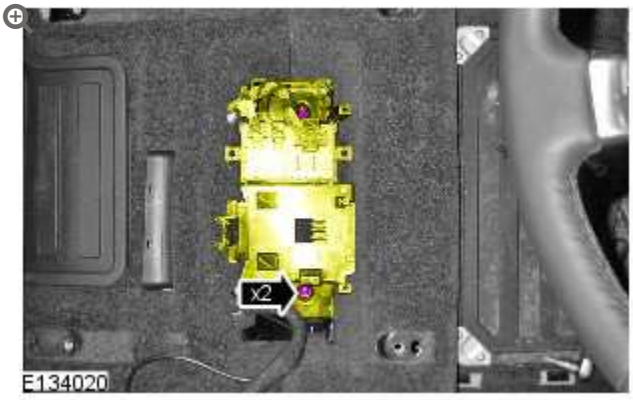

Secure the seat heating module bracket.

- Install the 2 nuts.

11.

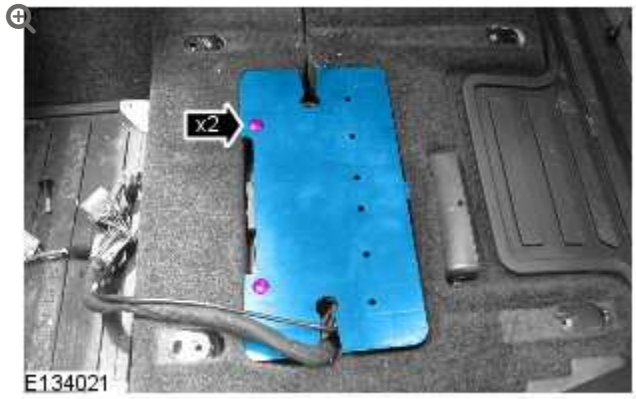

Install the parking aid camera module cover.

- Install the 2 scrivets.

12.

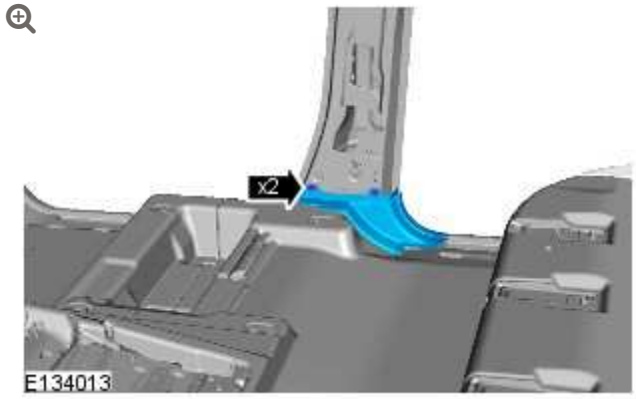

Install the B-pillar floor covering trim panel.

- Secure the 2 clips.
- Repeat to the other side.

13. Install the front scuff plate trim panel.

- Secure the 7 clips.
- Repeat to the other side.

14.

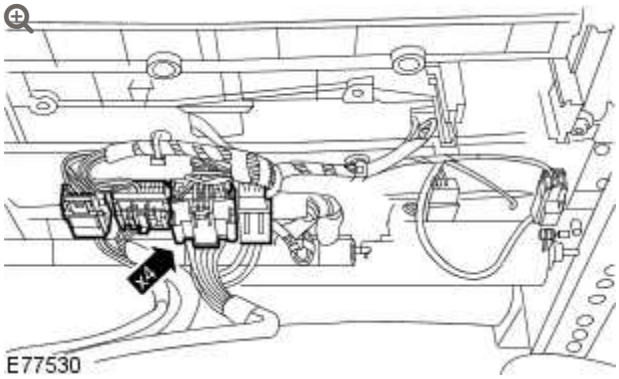

With assistance, install the LH front seat.

- Connect the 4 electrical connectors.

15. Install the RH front seat.
For additional information, refer to: Front Seat (501-10 Seating, Removal and Installation).

16. **NOTE:**

Make sure the 3 seat rail covers are fitted to their original positions. Note: The inner front seat rail does not have a seat rail cover.

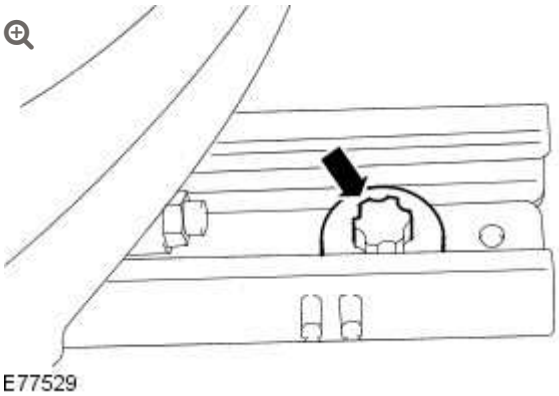

Install the 2 front bolts to the front seat.

- Align the front seat locating pegs.
- Position the front seat fully rearwards.

- Tighten the front seat front bolts to 45 Nm.

17. **NOTE:**

Make sure the 3 seat rail covers are fitted to their original positions. Note: The inner front seat rail does not have a seat rail cover.

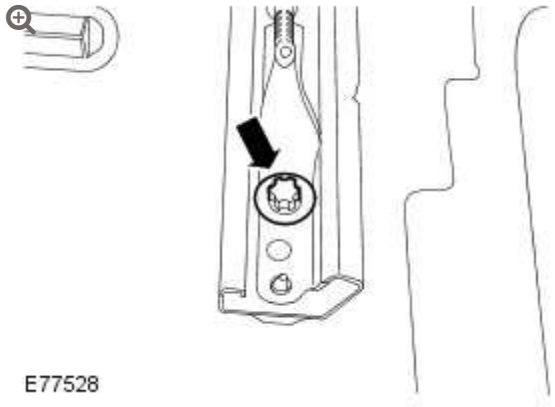

Install the 2 rear bolts to the front seat.

- Position the front seat fully forwards.
- Tighten the front seat rear bolts to 45 Nm.

18. Install the LH B-pillar upper trim panel.
For additional information, refer to: B-Pillar Trim Panel (501-05 Interior Trim and Ornamentation, Removal and Installation).

19. **CAUTION:**

Make sure the safety belt is secure and correctly installed.



Install the RH B-pillar trim panel.

20.

NOTE:

Make sure the safety belt is operating correctly.

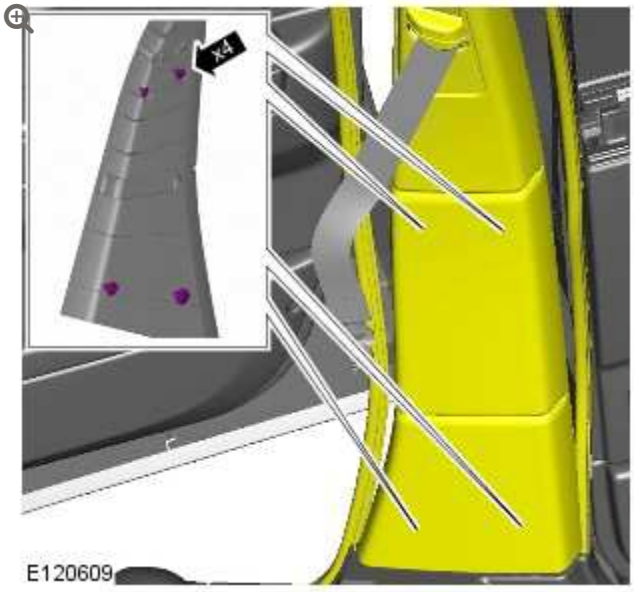

Secure the B-pillar trim panel.

- Secure the 4 clips.
- Secure the front and rear door aperture weatherstrips.

21.

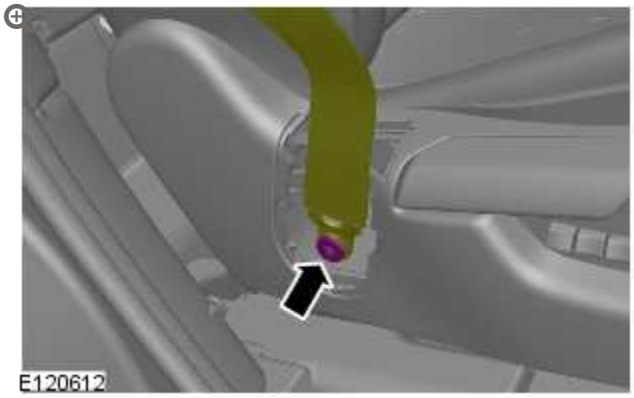

Attach the safety belt lower anchor to the seat.

- Install a new bolt and tighten to 45 Nm.

22.

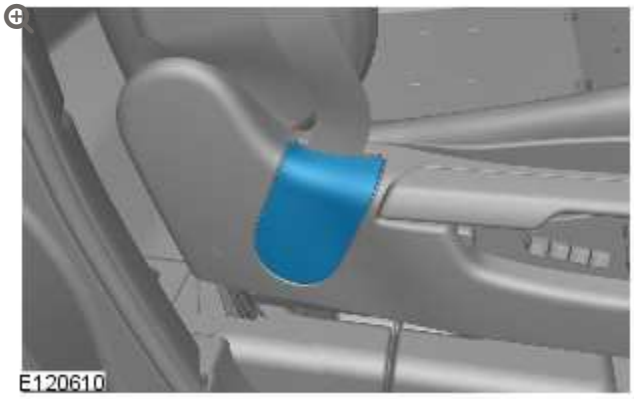

Install the safety belt lower anchor bolt cover.

WIRING HARNESSES

LEFT HAND PARKING AID CAMERA WIRING HARNESS (G1371951)

REMOVAL AND INSTALLATION

REMOVAL

CAUTION:

Make sure that the camera overlay wiring harness is not bent excessively during this procedure. Failure to follow this instruction may result in damage to the harness.

1. Remove the LH B-pillar trim panel.
   For additional information, refer to: B-Pillar Trim Panel (501-05 Interior Trim and Ornamentation, Removal and Installation).

2. Remove the LH front seat.
   For additional information, refer to: Front Seat (501-10 Seating, Removal and Installation).

3.

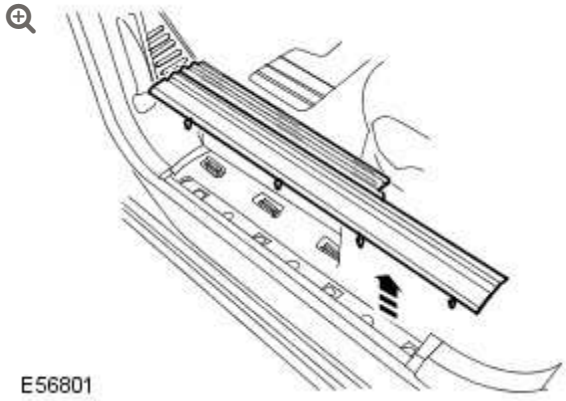

Remove the front scuff plate trim panel.

- Release the 7 clips.

4.

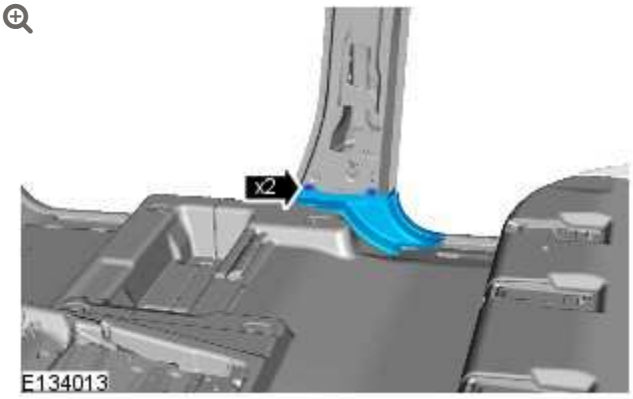

Remove the B-pillar floor covering trim panel.

- Remove the 2 clips.

5.

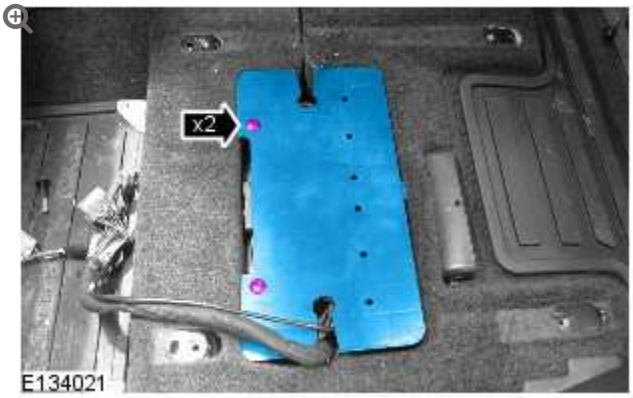

Remove the parking aid camera module cover.

- Remove the 2 scrivets.

6.



Disconnect the camera wiring harness.

7.

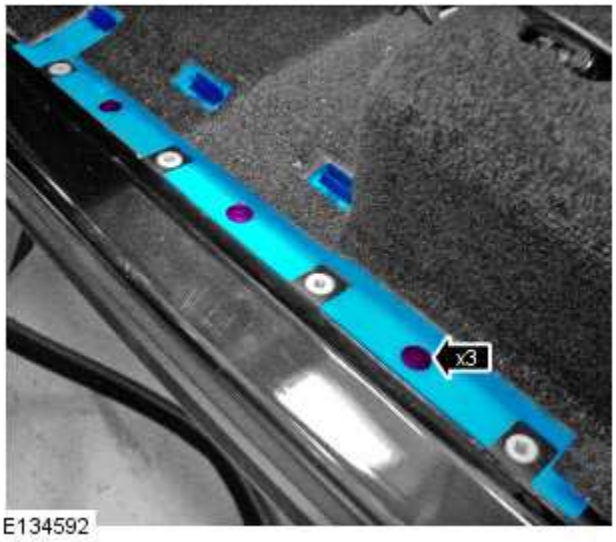

Remove the LH wiring harness cover.

- Remove the 3 clips.

8.

Remove the LH cowl side trim panel. For additional information, refer to: Cowl Side Trim Panel (501-05 Interior Trim and Ornamentation, Removal and Installation).

9.

NOTES:

- Door shown removed for clarity.
- Right-hand shown, left-hand similar.

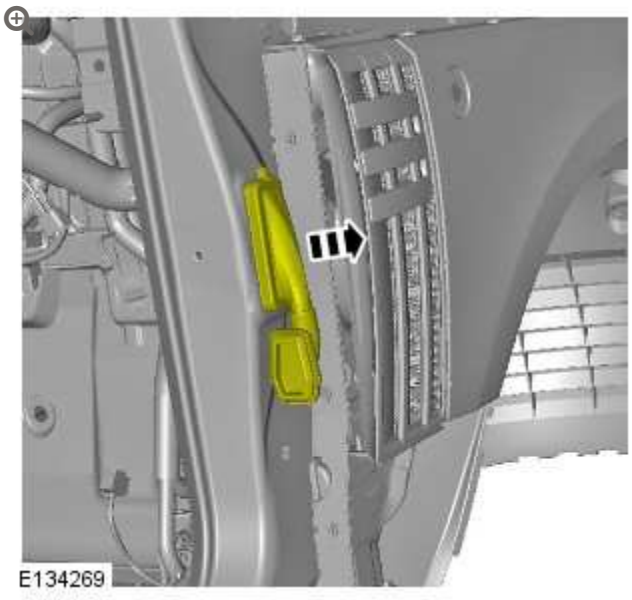

Release the gaiter.

10.

NOTE:

Right-hand shown, left-hand similar.

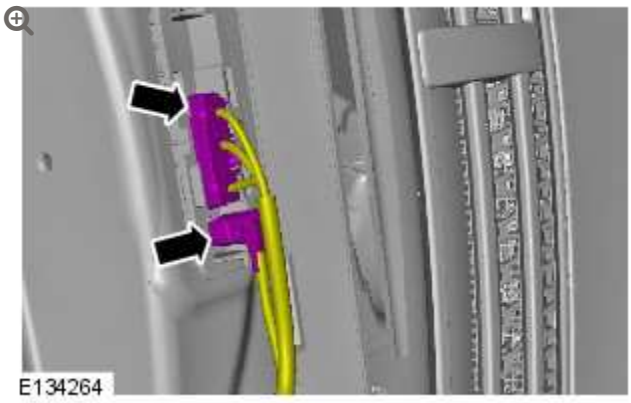

Disconnect the 2 electrical connectors.

11.

NOTE:

Right-hand shown, left-hand similar.

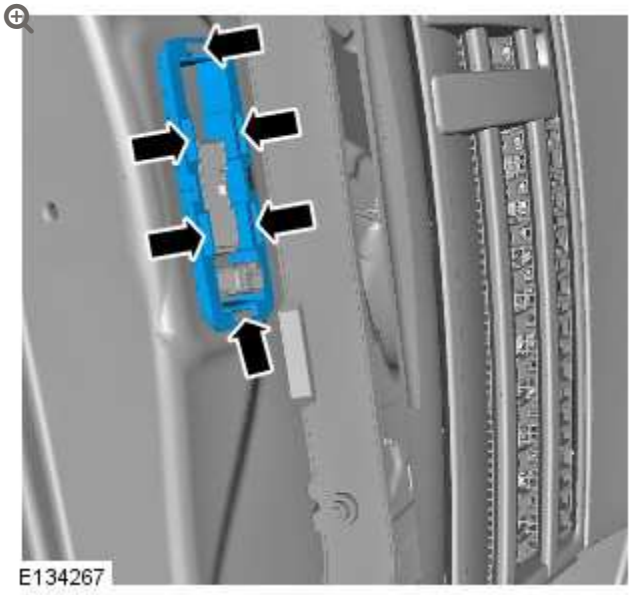

Remove the gaiter mounting bracket.

- Carefully release the 6 clips.

12.

NOTE:

Right-hand shown, left-hand similar.

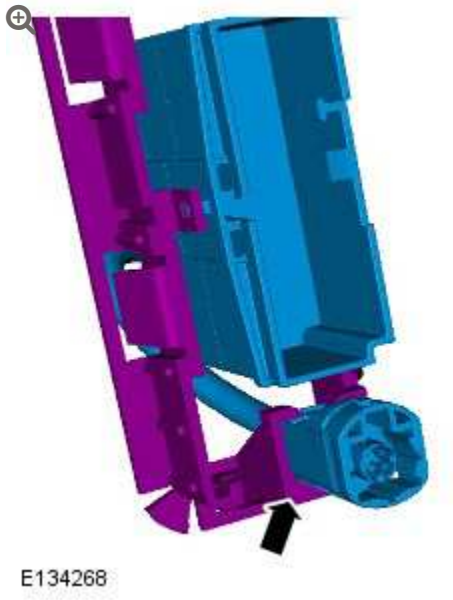

Release the electrical connector from the bracket.

13.

NOTE:

Some variation in the illustrations may occur, but the essential information is always correct.

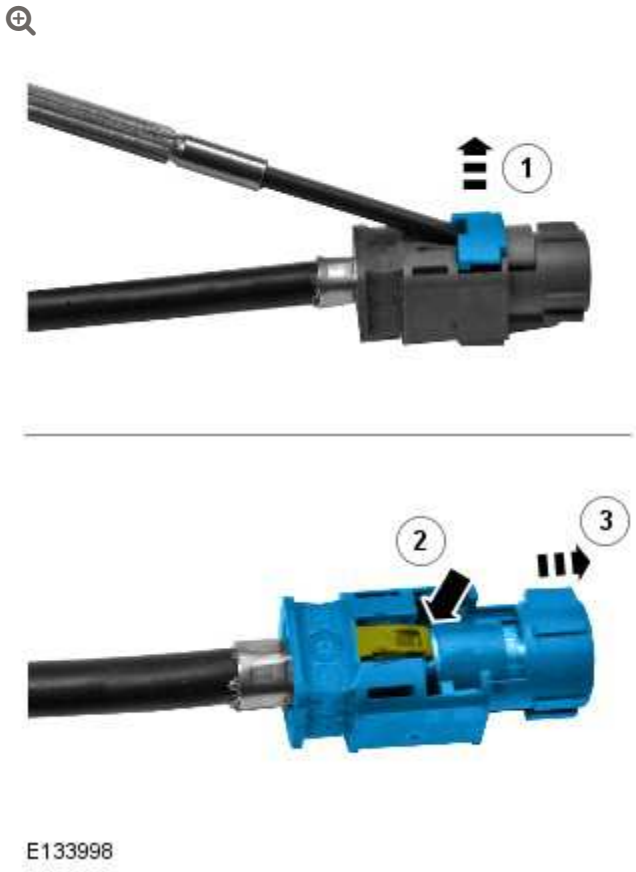

E133998

Remove the connector from the camera wiring harness.

- Remove the locking tab.
- Carefully release the clip.
- Repostition the camera wiring harness through the A-pillar aperture.

INSTALLATION

1.

CAUTION:

Make sure that the camera overlay wiring harness is not bent excessively during this procedure. Failure to follow this instruction may result in damage to the harness.



Install the camera overlay wiring harness.

2.



Connect the camera overlay wiring harness.

3.

CAUTION:

Make sure that any tie straps used are not tightened excessively on the camera wiring harness and link leads, Failure to follow this instruction may result in damage to the harness.



Carefully wrap any excess camera overlay wiring harness around the module.

- Using suitable tie straps, secure the camera overlay wiring harness to the main body wiring harness.

4.

NOTE:

Some variation in the illustrations may occur, but the essential information is always correct.

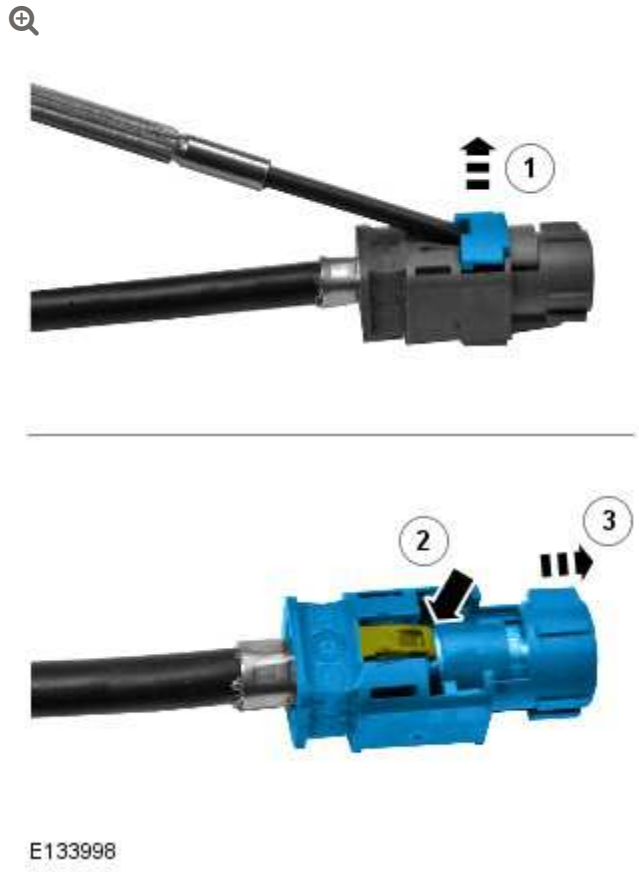

Remove the connector from the camera overlay wiring harness.

- Remove the locking tab.
- Carefully release the clip.
- Apply suitable tape to protect the end of the camera overlay wiring harness.

5. Feed the camera overlay wiring harness through the A-pillar aperture.

6. **NOTE:**

Some variation in the illustrations may occur, but the essential information is always correct.

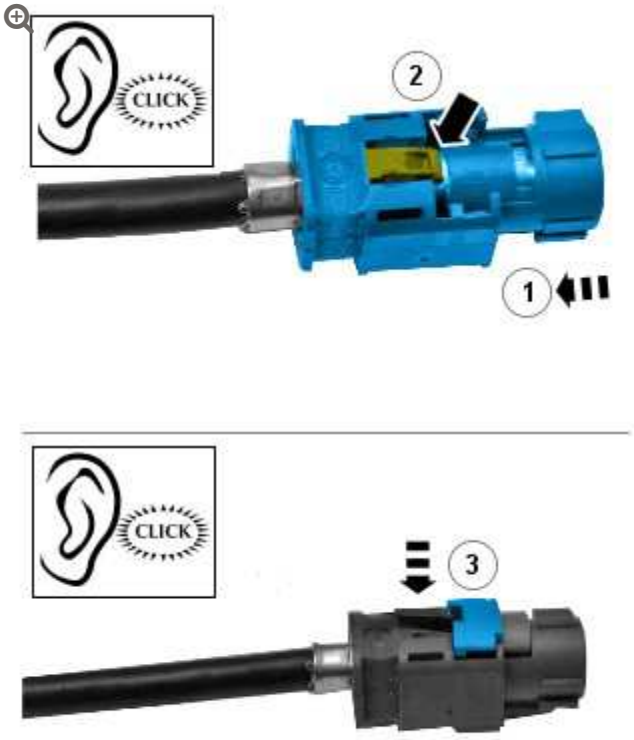

E134007

Install the connector to the camera overlay wiring harness.

- Remove the protective tape.
- Install the electrical connector.
- Secure the locking tab.

7.

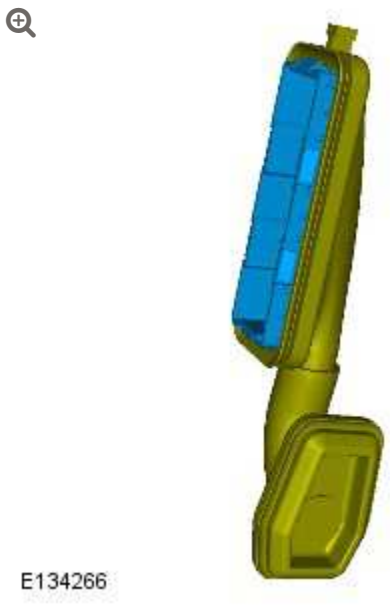

Secure the gaiter to the gaiter bracket.

8. **CAUTION:**

Make sure the electrical connectors are correctly installed and secured.

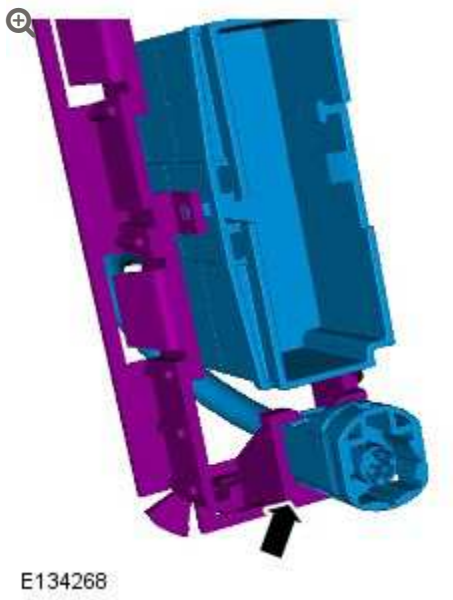

Secure the camera wiring harness.

9. 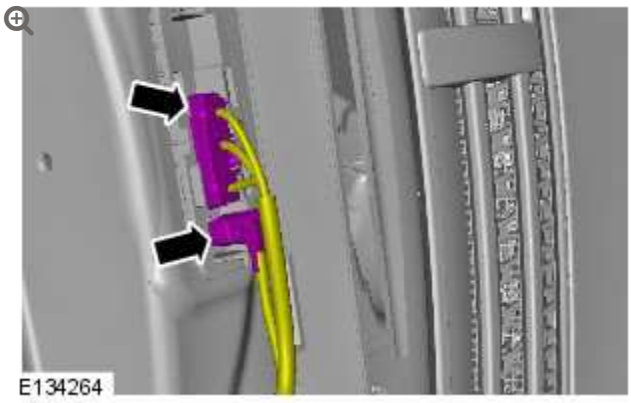

Connect the 2 electrical connectors.

10. 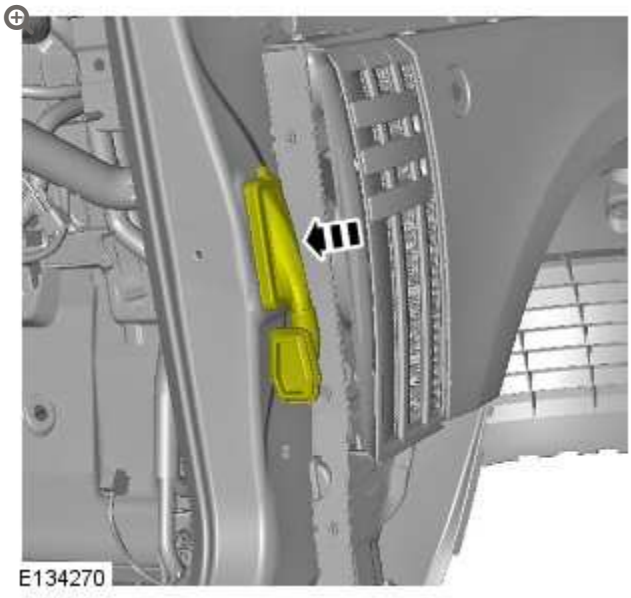

Secure the gaiter mounting bracket.

- Secure the 6 clips.

11. Install the LH cowl side trim panel. For additional information, refer to: Cowl Side Trim Panel (501-05 Interior Trim and Ornamentation, Removal and Installation).

12. **NOTE:**

Left-hand shown, right-hand similar.

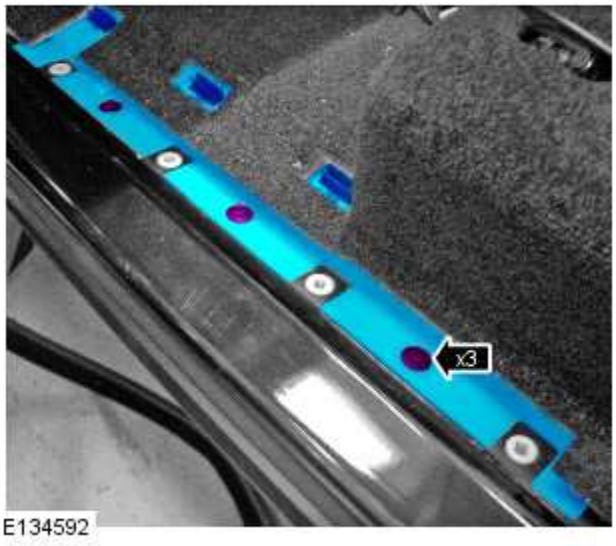

Install the LH wiring harness cover.

- Secure the 3 clips.

13.



Install the parking aid camera module cover.

- Install the 2 scrivets.

14.

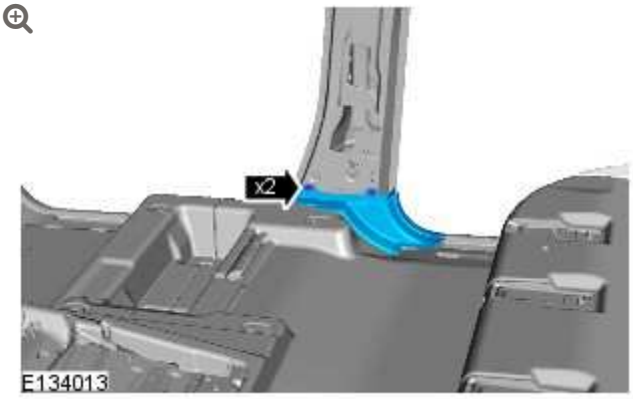

Install the B-pillar floor covering trim panel.

- Secure the 2 clips.
- Repeat to the other side.

15. Install the front scuff plate trim panel.
    - Secure the 7 clips.

16. Install the LH front seat.
    For additional information, refer to: Front Seat (501-10 Seating, Removal and Installation).

17. Install the LH B-pillar upper trim panel.
    For additional information, refer to: B-Pillar Trim Panel (501-05 Interior Trim and Ornamentation, Removal and Installation).

WIRING HARNESSES

PARKING AID CAMERA SIGNAL FILTER (G1393969)

REMOVAL AND INSTALLATION

REMOVAL

NOTE:

Identify the correct parking aid camera wiring harness:

- The LH front camera has white connectors.
- The rear camera has blue connectors.
- The LH side view camera has green connectors.
- The RH front camera has black connectors.
- The RH side view camera has magenta connectors.

1.

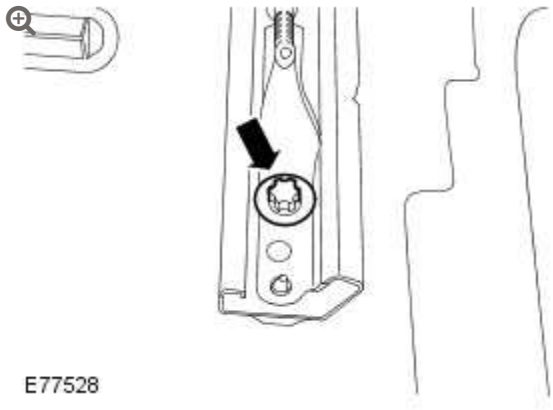

Remove the LH front seat rear bolts.

- Position the seat fully to the fully forward position.
- Remove the 2 bolts.

2.

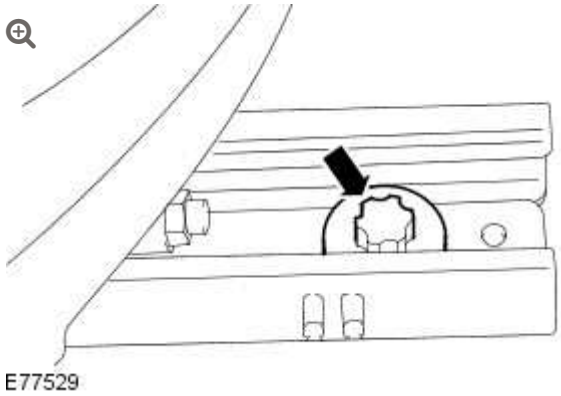

Release the LH front seat.

- Position the seat to the fully rearward position.
- Remove the 2 bolts.

3.

CAUTION:

Make sure that the seat harness is not damaged during the positioning of the seat.

With the aid of another technician, position the seat forwards to access the camera module.

4.

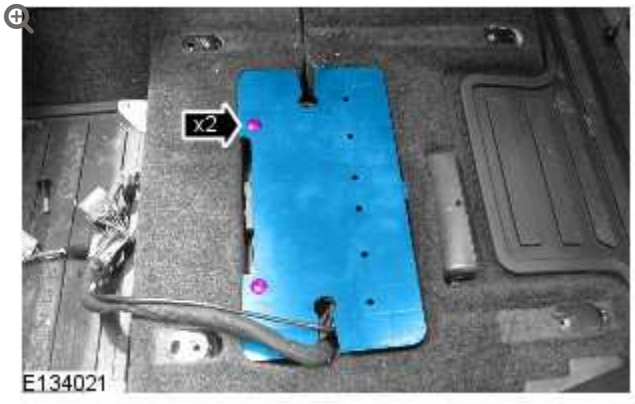

Remove the parking aid camera module cover.

- Remove the 2 scrivets.

INSTALLATION

1.

CAUTION:

Make sure that the camera wiring harness and link leads are not bent excessively during these procedures. Failure to follow this instruction may result in damage to the harness.



Take care when handling the wiring harness and link lead.

2.



Using a suitable tool remove the camera wiring harness securing tape to the position shown.

3.



E135620

Identify the ECU connector on the parking aid camera signal filter.

4.

CAUTION:

Make sure that the correct end of the link lead is installed to the parking aid camera signal filter

NOTE:

LH front camera and rear camera only

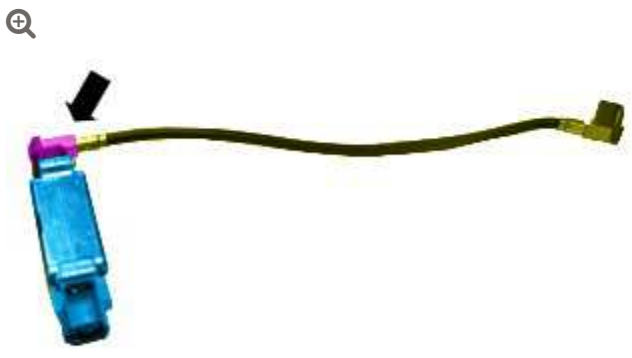
E135619

Install the link lead to the connector on the parking aid camera signal filter marked ECU.

5.

CAUTION:

Make sure that the correct end of the link lead is installed to the parking aid camera signal filter

NOTE:

RH front camera, RH side view camera and LH side view camera only

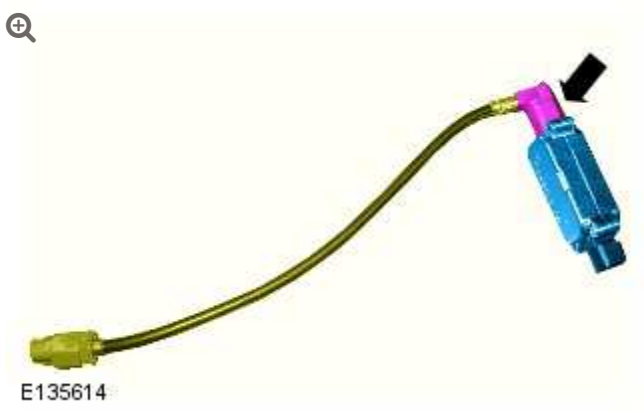

Install the link lead to the connector on the parking aid camera signal filter marked ECU.

6.

CAUTION:

Some variation in the illustrations may occur, but the essential information is always correct.

NOTE:

All parking aid cameras



Install the foam pad to the parking aid camera signal filter.

7.

NOTES:

- LH front camera and rear camera only
- LH front camera shown, rear camera similar.

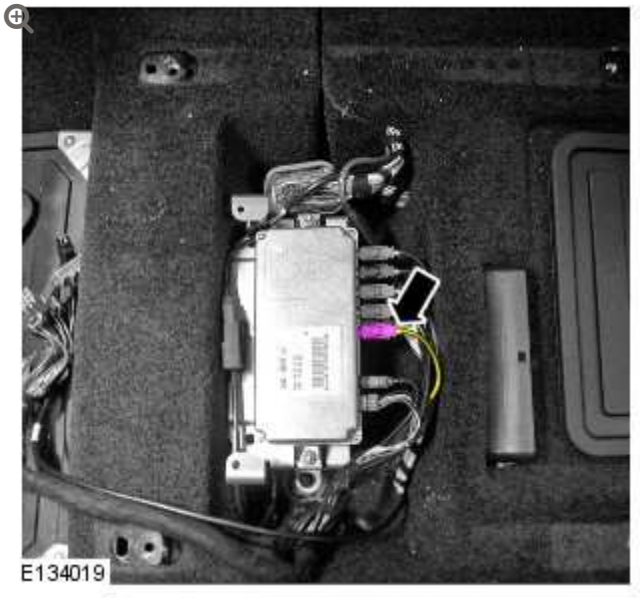

Disconnect the appropriate electrical connector.

8.

NOTES:

- LH front camera only
- Foam pad shown removed for clarity.



Install the parking aid camera signal filter and link lead assembly in the position shown.

- Connect the 2 electrical connectors

9.

NOTES:

- Rear camera only
- Foam pad shown removed for clarity.



Install the parking aid camera signal filter and link lead assembly in the position shown.

- Connect the 2 electrical connectors

10.

NOTES:

- RH front camera, RH side view camera and LH side view camera only
- LH side view camera shown, RH side view camera and RH front camera similar.



Disconnect the appropriate electrical connector.

11.

NOTES:

- LH side view camera only.
- Foam pad shown removed for clarity.



Install the parking aid camera signal filter and link lead assembly in the position shown.

- Connect the 2 electrical connectors

12.

NOTES:

- RH front camera only.
- Foam pad shown removed for clarity.



Install the parking aid camera signal filter and link lead assembly in the position shown.

- Connect the 2 electrical connectors

13.

NOTES:

- RH side view camera only.
- Foam pad shown removed for clarity.



Install the parking aid camera signal filter and link lead assembly in the position shown.

- Connect the 2 electrical connectors

14.

NOTE:

All parking aid cameras

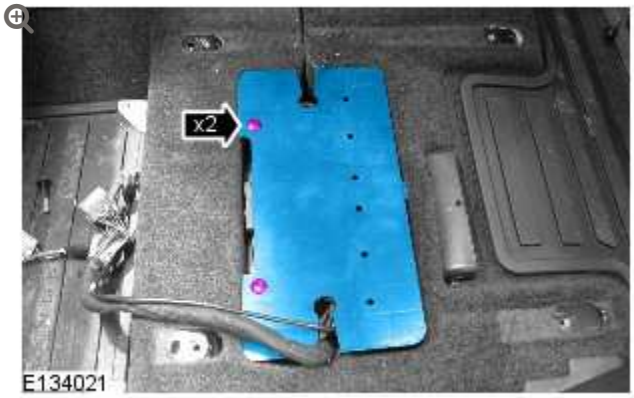

Install the parking aid camera module cover.

- Secure the 2 scrivets.

15.

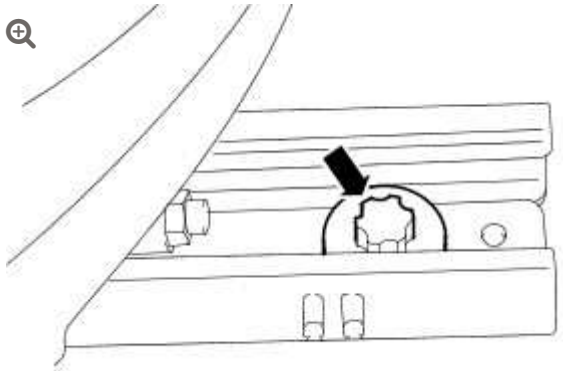

With the aid of another technician, install the LH front seat.

- Align the front seat locating pegs.
- Tighten the bolts to 45 Nm .

16.

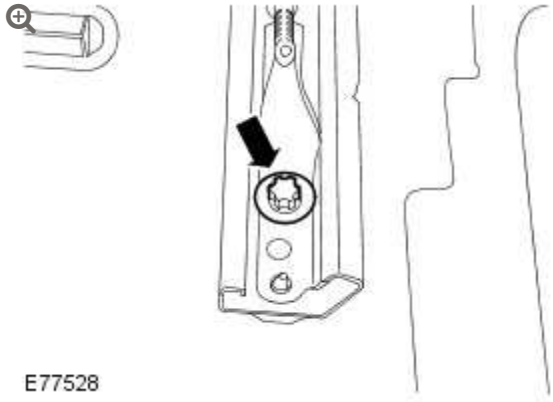

Secure the LH front seat.

- Position the front seat fully forwards.
- Tighten the bolts to 45 Nm .

REAR PARKING AID CAMERA LINK WIRING HARNESS (G1426518)

REMOVAL AND INSTALLATION

REMOVAL

1. Refer to: Rear Spoiler (501-08 Exterior Trim and Ornamentation, Removal and Installation).

2. 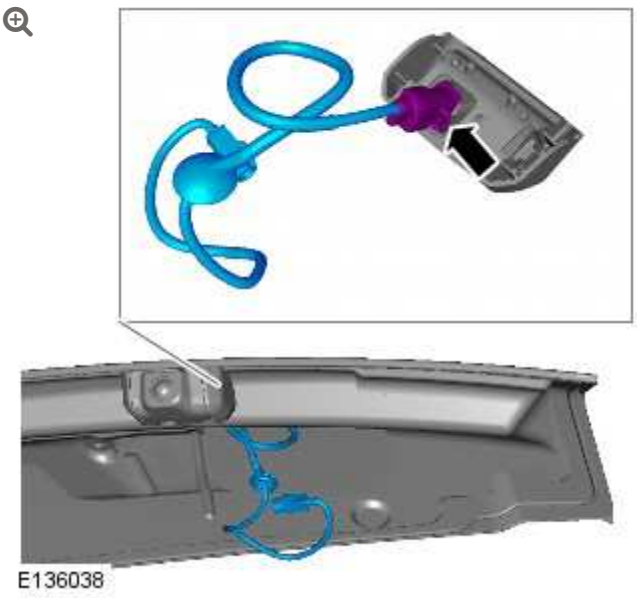

INSTALLATION

1. To install, reverse the removal procedure.

WIRING HARNESSES

REAR PARKING AID CAMERA WIRING HARNESS (G1371950)

REMOVAL AND INSTALLATION

REMOVAL

CAUTION:

Make sure that the camera overlay wiring harness is not bent excessively during this procedure. Failure to follow this instruction may result in damage to the harness.

1. Remove the liftgate upper trim panel.
   For additional information, refer to: Liftgate Upper Trim Panel (501-05 Interior Trim and Ornamentation, Removal and Installation).

2. Remove the LH rear quarter trim panel.
   For additional information, refer to: Rear Quarter Trim Panel (501-05 Interior Trim and Ornamentation, Removal and Installation).

3. Repeat procedure for the other side.

4. **NOTE:**

LH illustration shown, RH is similar.

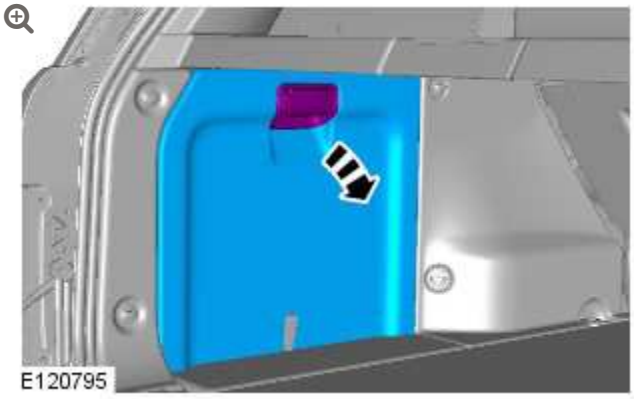

Remove the RH loadspace trim panel.

5. 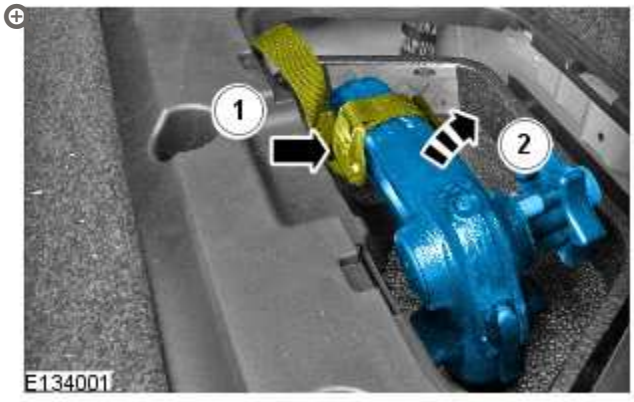

Remove the towing ball.

- Release the strap.

6.



Remove the towing ball holder.

- Remove the 2 bolts.

7.



Release the liftgate aperture seal.

8.



Remove the headliner retainer.

- Remove the Torx bolt.

- Repeat to the other side.

9.

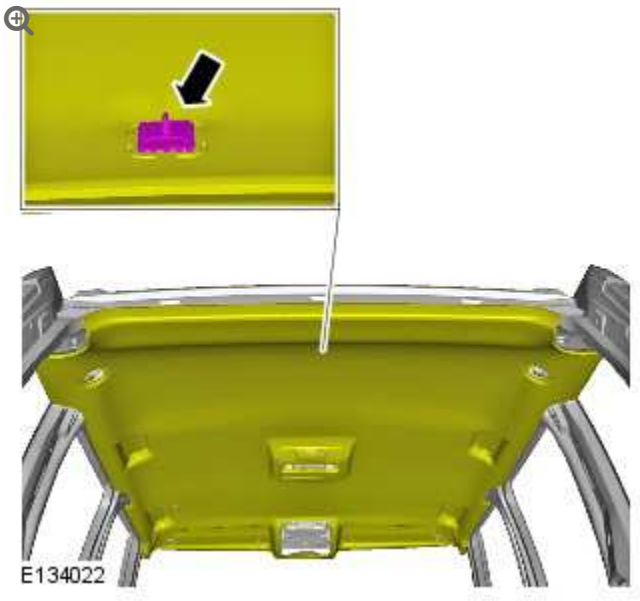

Carefully release the headliner for access.

- Carefully release the clip.

10. Remove the rear seats.
For additional information, refer to: Rear Seat (501-10 Seating, Removal and Installation).

11. Remove the C-pillar lower trim panel
For additional information, refer to: C-Pillar Lower Trim Panel (501-05 Interior Trim and Ornamentation, Removal and Installation).

12. Repeat procedure for the other side.

13. Remove the B-pillar trim panel.
For additional information, refer to: B-Pillar Trim Panel (501-05 Interior Trim and Ornamentation, Removal and Installation).

14. Repeat procedure for the other side.

15.

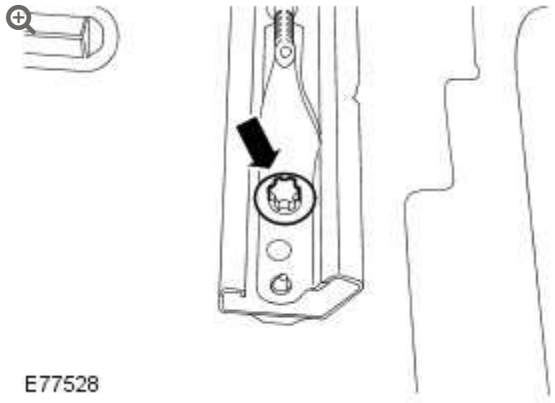

Remove the 2 rear bolts from the LH front seat.

16.

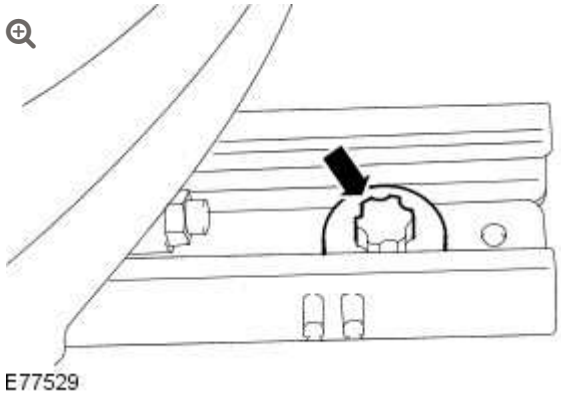

Release the LH front seat.

- Move the LH front seat fully backwards.
- Remove the 2 front seat front bolts.

17. Remove the RH front seat.
For additional information, refer to: Front Seat (501-10 Seating, Removal and Installation).

18.

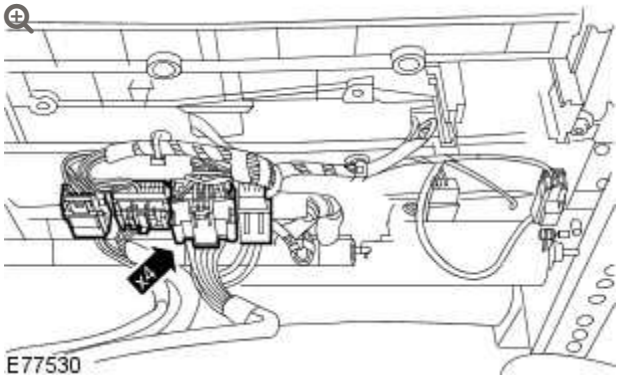

With assistance remove the LH front seat.

- Disconnect the 4 electrical connectors.

19.

NOTE:

Left-hand shown, right-hand similar.

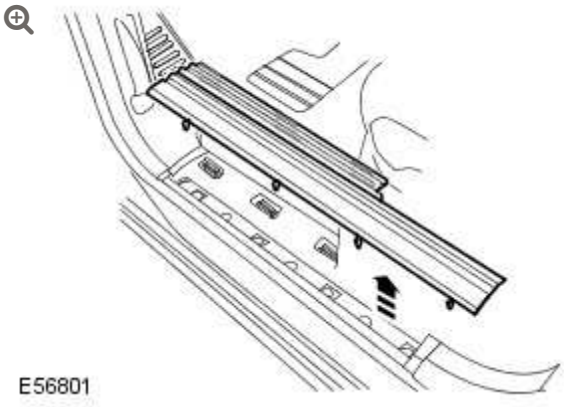

Remove the front scuff plate trim panel.

- Release the 7 clips.
- Repeat to the other 3 scuff plate trim panels.

20.

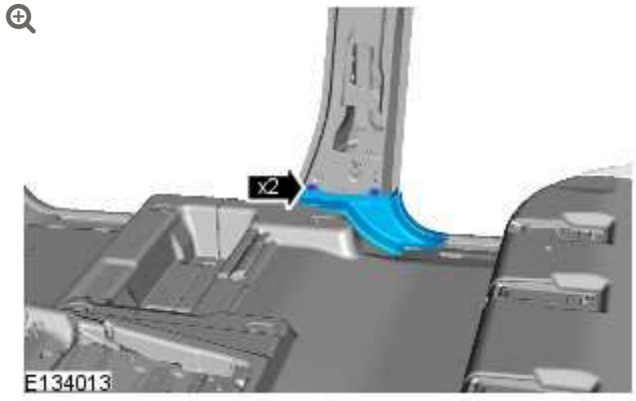

Remove the B-pillar floor covering trim panel.

- Remove the 2 clips.
- Repeat to the other side.

21.

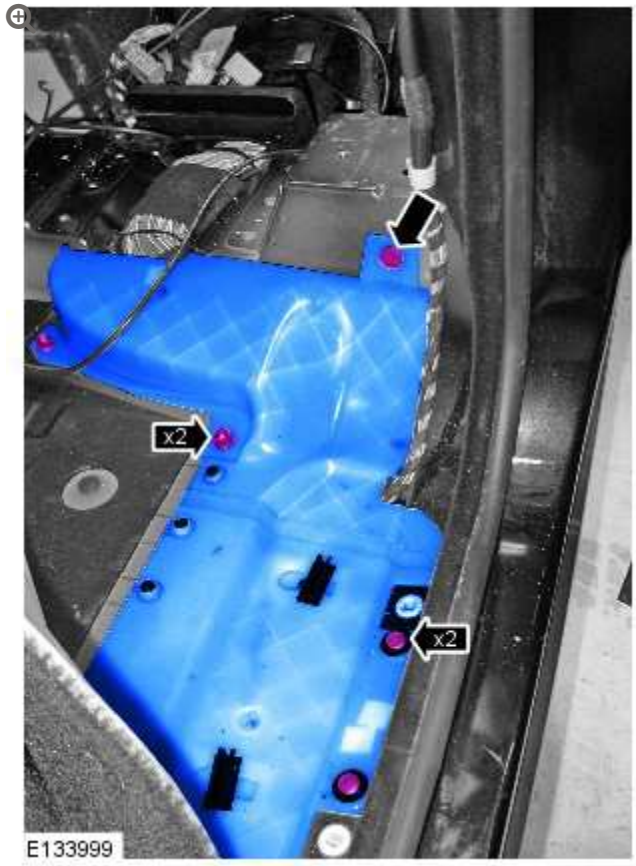

Remove the 2 center wiring harness covers.

- Remove the 4 clips.
- Remove the nut.

22.

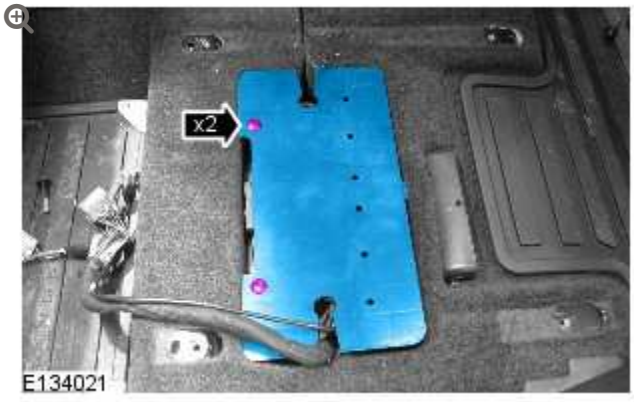

Remove the parking aid camera module cover.

- Remove the 2 scrivets.
- Repeat to the other side.

23.

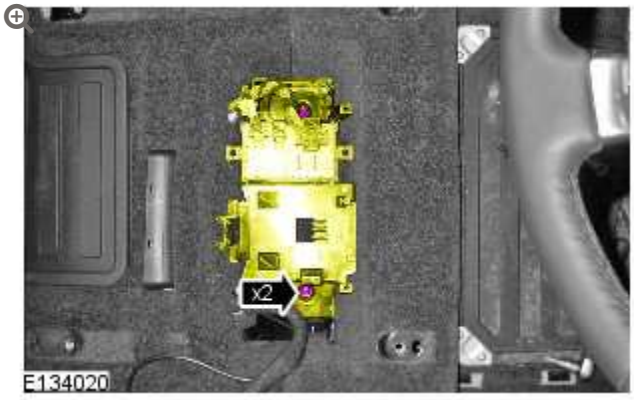

Release the seat heating module bracket.

- Remove the 2 nuts.

24.

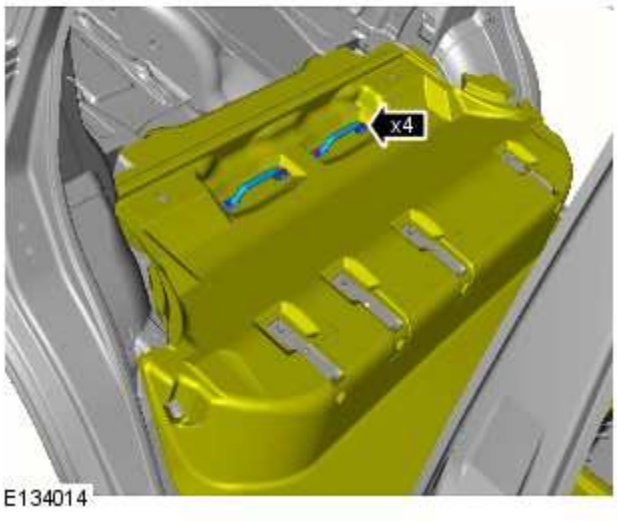

Remove the rear seat brackets.

- Remove the 4 Torx bolts.

25.

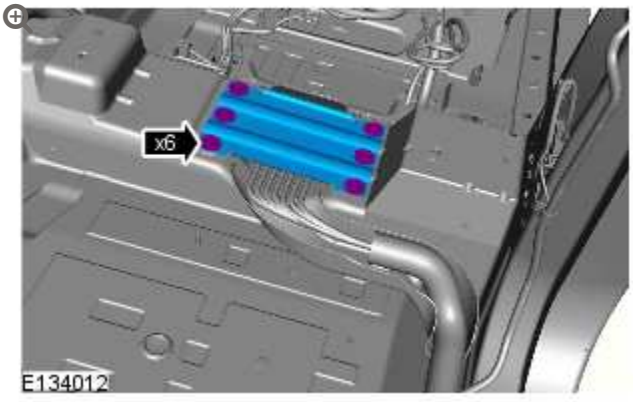

Remove the wiring harness cover.

- Remove the 6 bolts.

26.

NOTE:

Some variation in the illustrations may occur, but the essential information is always correct.

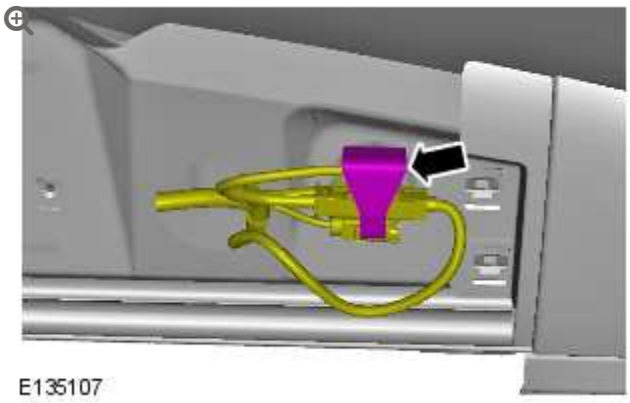

If installed, release the wiring harness clip.

27.

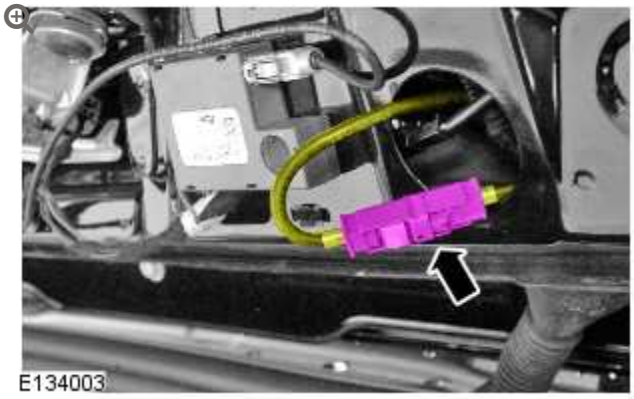

Disconnect the camera wiring harness.

28.

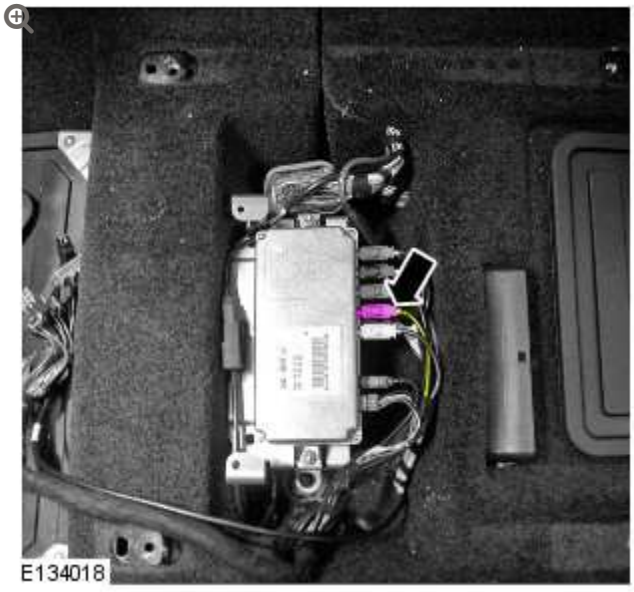

Disconnect the camera wiring harness.

INSTALLATION

1.

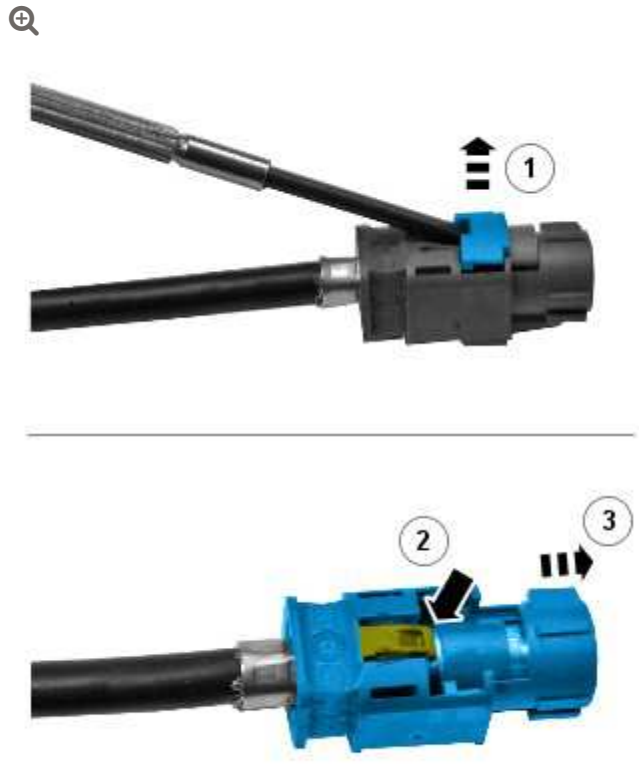

E133998

Remove the connectors from the camera overlay wiring harness.

- Remove the locking tab.
- Carefully release the clip.
- Apply suitable tape to protect the end of the camera overlay wiring harness.
- Repeat to the other connector.

2.

CAUTION:

Make sure that the camera overlay wiring harness is not bent excessively during this procedure. Failure to follow this instruction may result in damage to the harness.



Install the camera overlay wiring harness.

3.

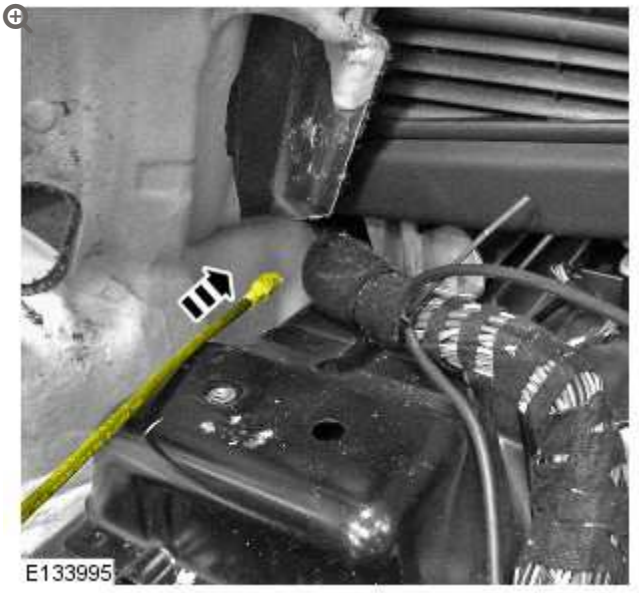

Insert the camera overlay wiring harness under the floor console.

-

Route the camera overlay wiring harness along the main body wiring harness up to the parking camera module.

4.



Install the connector to the camera overlay wiring harness.

- Remove the protective tape.
- Install the electrical connector.
- Secure the locking tab.

5.

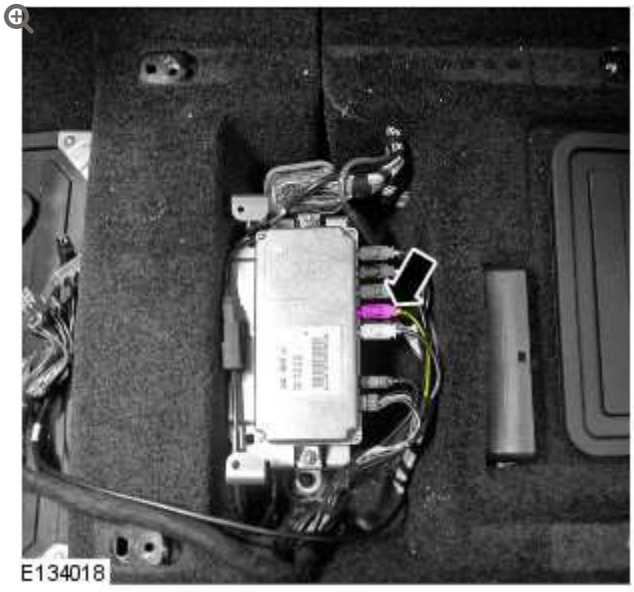

Connect the camera overlay wiring harness.

6.

CAUTION:

Make sure that excessive force is not used when installing the tie straps to the wiring harness. Failure to follow this instruction may result in damage to the harness.



Using suitable tie straps, secure the camera overlay wiring harness to the main body wiring harness.

7. Feed the camera overlay wiring harness to the rear of the vehicle along the main body wiring harness.

8. 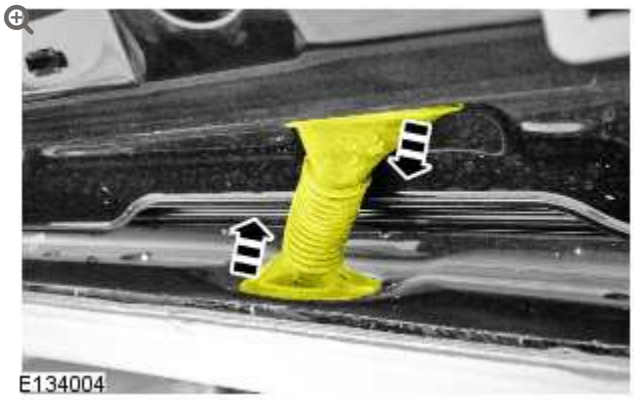

Release the liftgate conduit.

- Release the 2 grommets.

9. 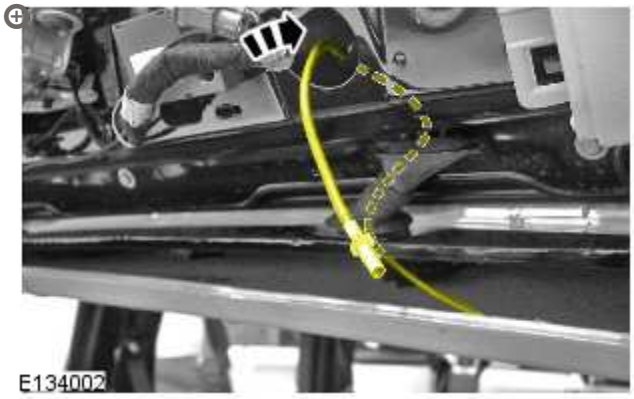

Feed the camera overlay wiring harness through the liftgate conduit.

10.

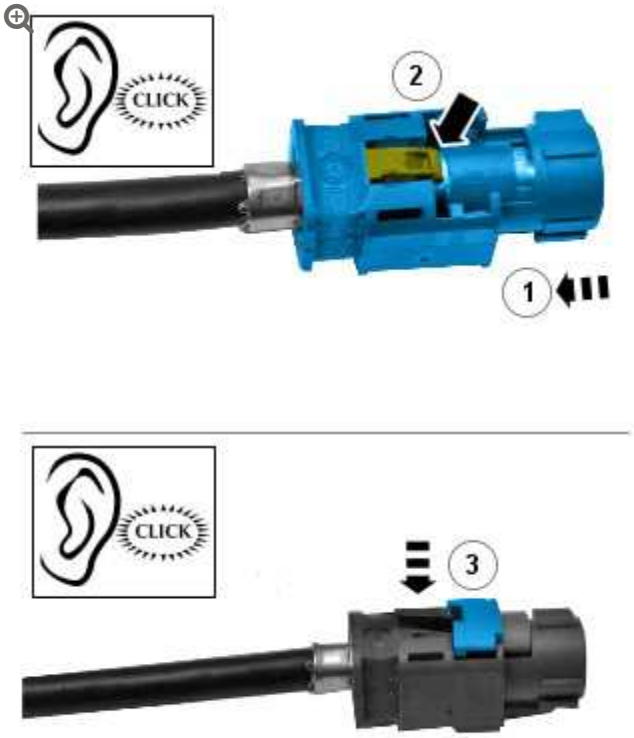

E134007

Install the connector to the camera overlay wiring harness.

- Remove the protective tape.
- Install the electrical connector.
- Secure the locking tab.
- Make sure the camera overlay wiring harness protrudes the same distance as the existing camera wiring harness.

11.

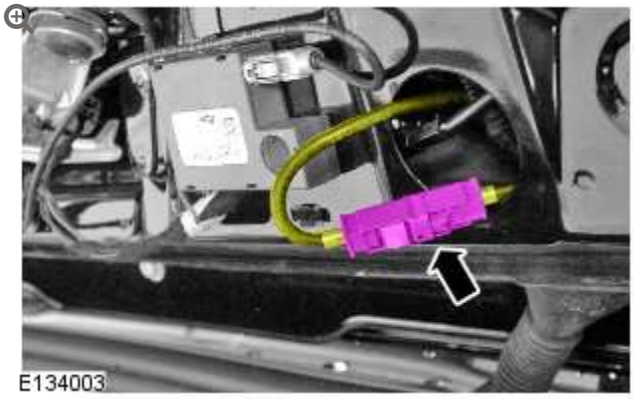

Connect the camera overlay wiring harness.

12.

CAUTION:

Make sure that a wiring harness clip is installed to the vehicle. Failure to follow this instruction may result in damage to the vehicle.

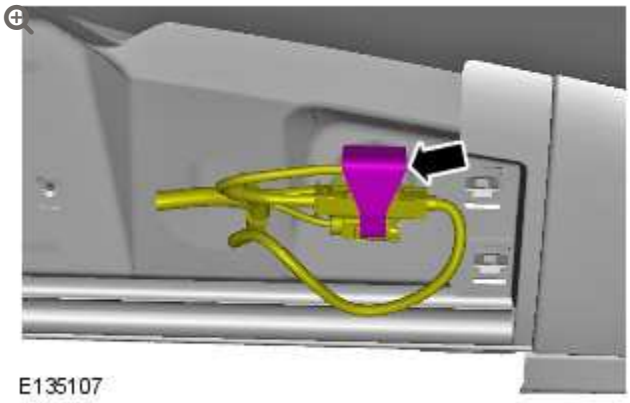

Secure the camera overlay wiring harness.

13.

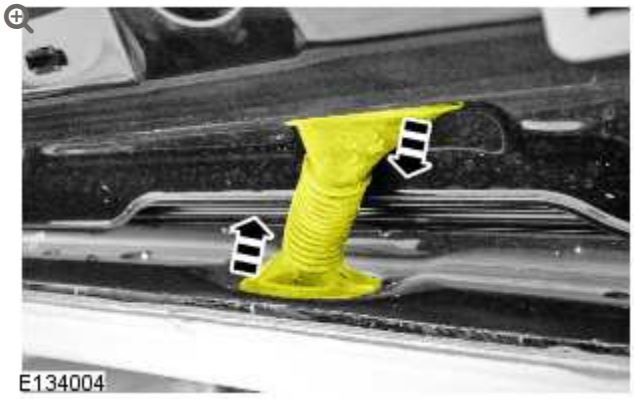

Secure the liftgate conduit.

- Secure the 2 grommets.

14.

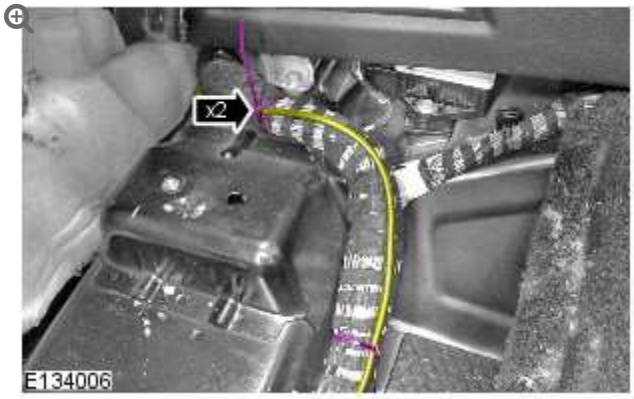

Using suitable tie straps, secure the camera overlay wiring harness to the main body wiring harness.

15.

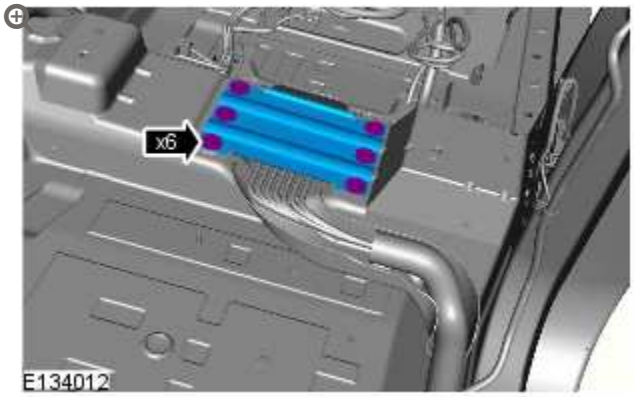

Install the wiring harness cover.

- Tighten the 6 bolts to 25 Nm.

16. Install the floor covering.

17.

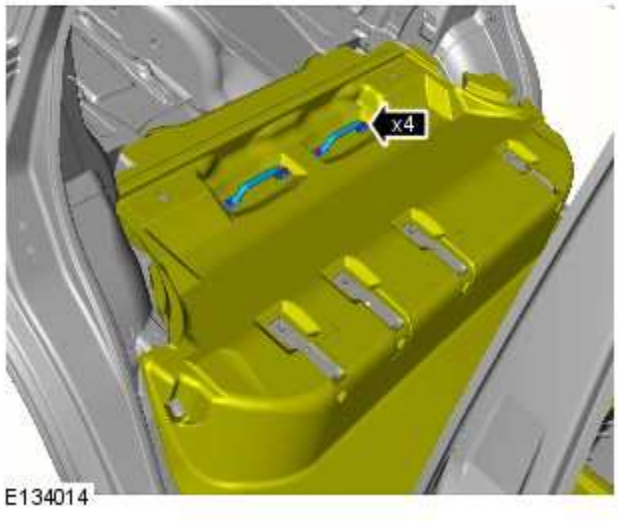

Install the rear seat backrest retaining brackets.

- Tighten the 4 Torx bolts to 45 Nm.

18.

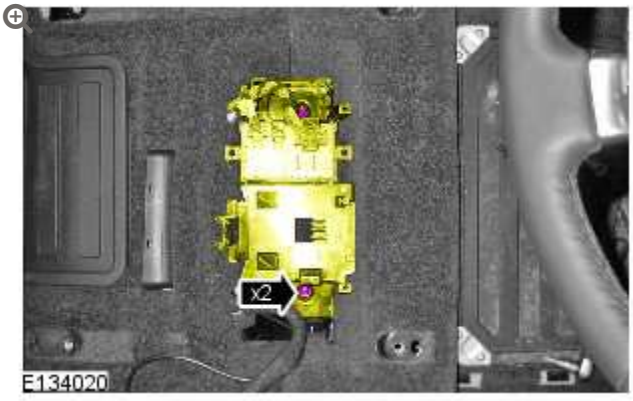

Secure the seat heating module bracket.

- Install the 2 nuts.

19.

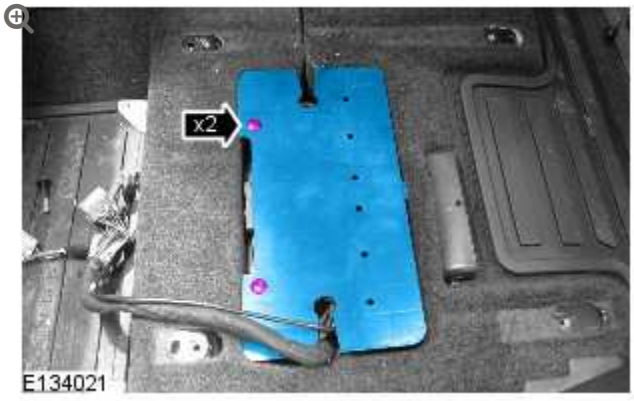

Install the parking aid camera module cover.

- Install the 2 scrivets.

20.

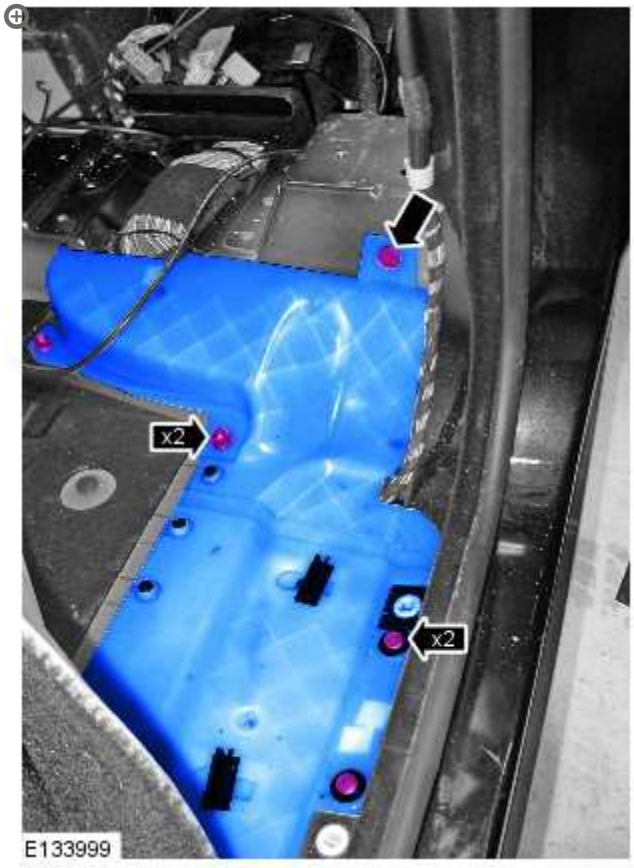

Install the 2 center wiring harness covers.

- Install the nut.
- Secure the 4 clips.

21.

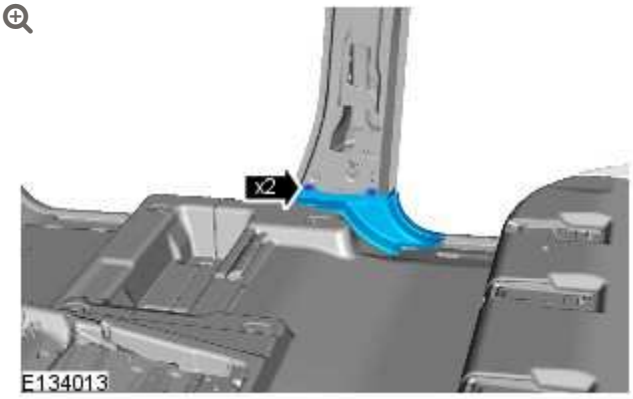

Install the B-pillar floor covering trim panel.

- Secure the 2 clips.
- Repeat to the other side.

22.

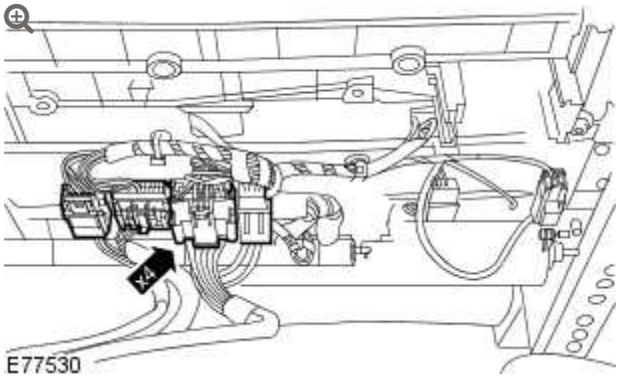

With assistance, install the LH front seat.

- Connect the 4 electrical connectors.

23. Install the RH front seat.
For additional information, refer to: Front Seat (501-10 Seating, Removal and Installation).

24.

NOTE:

Make sure the 3 seat rail covers are fitted to their original positions. Note: The inner front seat rail does not have a seat rail cover.

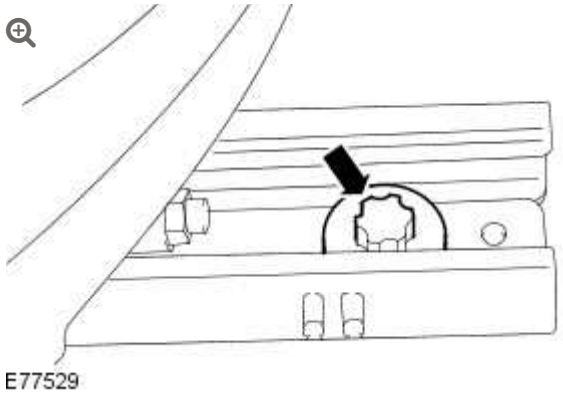

Install the 2 front bolts to the front seat.

- Align the front seat locating pegs.
- Position the front seat fully rearwards.
- Tighten the front seat front bolts to 45 Nm.

25.

NOTE:

Make sure the 3 seat rail covers are fitted to their original positions. Note: The inner front seat rail does not have a seat rail cover.

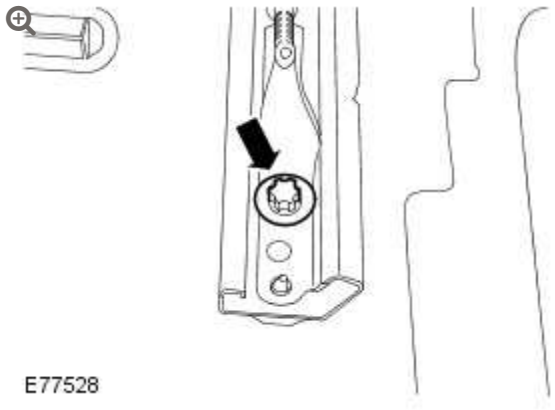

Install the 2 rear bolts to the front seat.

- Position the front seat fully forwards.
- Tighten the front seat rear bolts to 45 Nm.

26. Install the LH B-pillar upper trim panel.
For additional information, refer to: B-Pillar Trim Panel (501-05 Interior Trim and Ornamentation, Removal and Installation).

27. **CAUTION:**

Make sure the safety belt is secure and correctly installed.



Install the RH B-pillar trim panel.

28.

NOTE:

Make sure the safety belt is operating correctly.

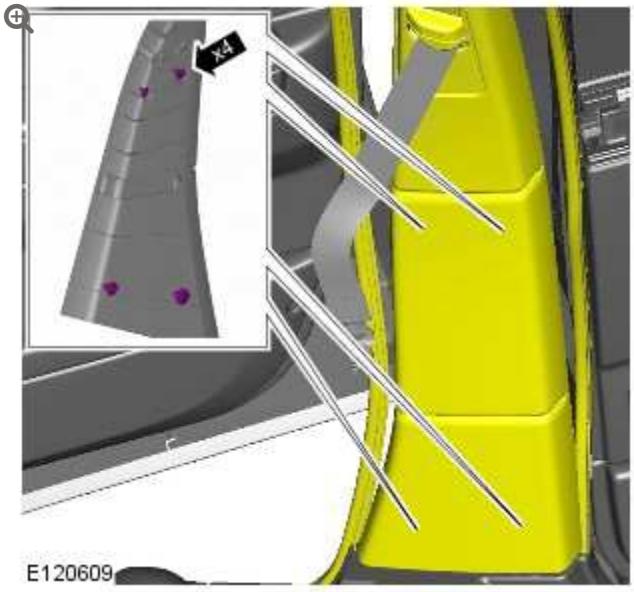

Secure the RH B-pillar trim panel.

- Secure the 4 clips.
- Secure the front and rear door aperture weatherstrips.

29.

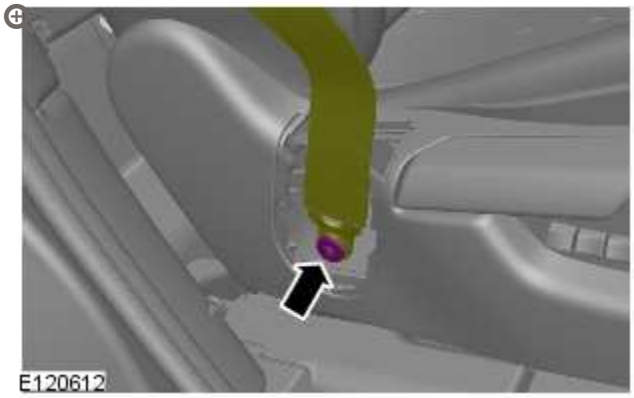

Attach the RH safety belt lower anchor to the seat.

- Install a new bolt and tighten to 45 Nm.

30.

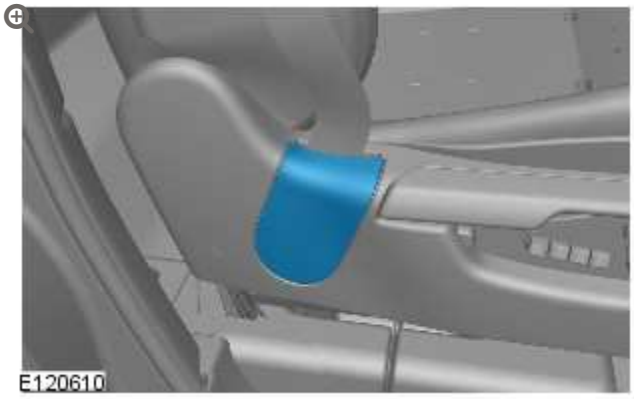

Install the safety belt lower anchor bolt cover.

31. Install the C-pillar lower trim panel.
    For additional information, refer to: C-Pillar Lower Trim Panel (501-05 Interior Trim and Ornamentation, Removal and Installation).

32. Repeat procedure for the other side.

33. Install the rear seats. For additional information, refer to: Rear Seat (501-10 Seating, Removal and Installation).

34. 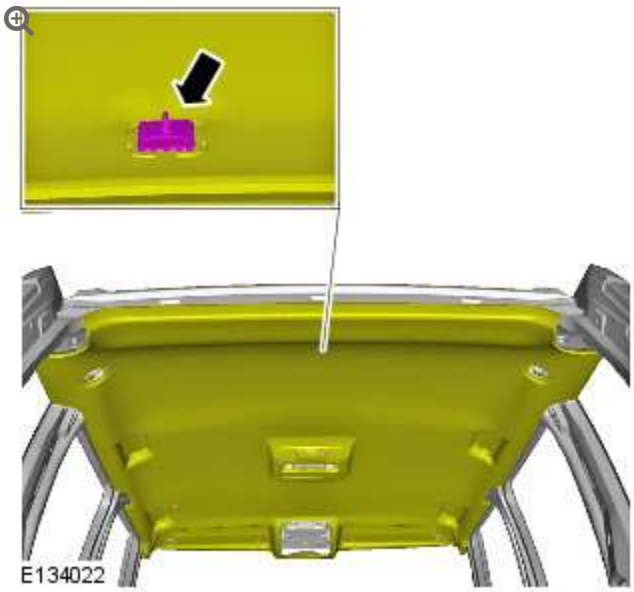

Secure the headliner.

- Secure the clip.

35.



Install the headliner retainer.

- Tighten the bolt to 7 Nm.
- Repeat to the other side.

36.



Install the liftgate aperture seal.

37.



Install the towing ball holder.

- Tighten the 2 bolts to 25 Nm.

38.

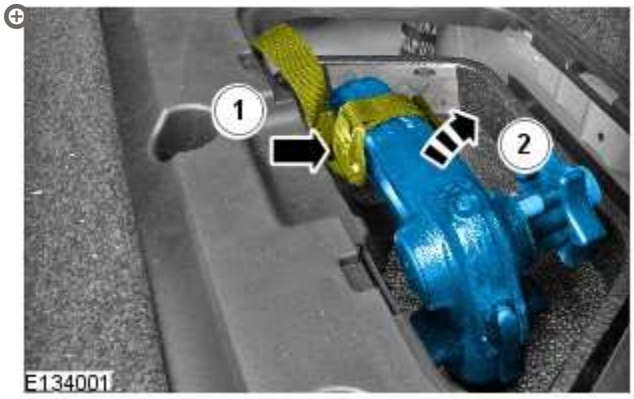

Install the towing ball.

- Secure the retaining strap.

39.

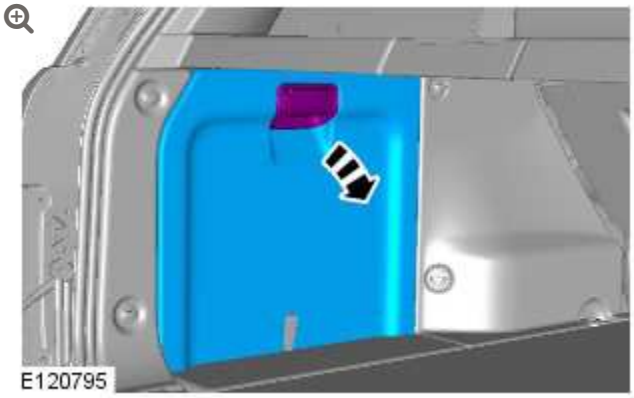

Install the RH loadspace trim panel.

40. Install the LH rear quarter trim panel.
    For additional information, refer to: Rear Quarter Trim Panel (501-05 Interior Trim and Ornamentation, Removal and Installation).

41. Repeat procedure for the other side.

42. Install the liftgate upper trim panel.
    For additional information, refer to: Liftgate Upper Trim Panel (501-05 Interior Trim and Ornamentation, Removal and Installation).

WIRING HARNESSES

RIGHT HAND PARKING AID CAMERA WIRING HARNESS (G1371949)

REMOVAL AND INSTALLATION

REMOVAL

CAUTION:

Make sure that the camera overlay wiring harness is not bent excessively during this procedure. Failure to follow this instruction may result in damage to the harness.

1. Remove the LH B-pillar trim panel.
   For additional information, refer to: B-Pillar Trim Panel (501-05 Interior Trim and Ornamentation, Removal and Installation).

2. Repeat procedure for the other side.

3.

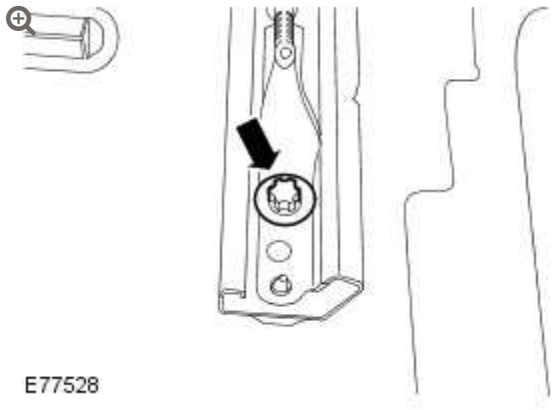

Remove the 2 rear bolts from the LH front seat.

4.

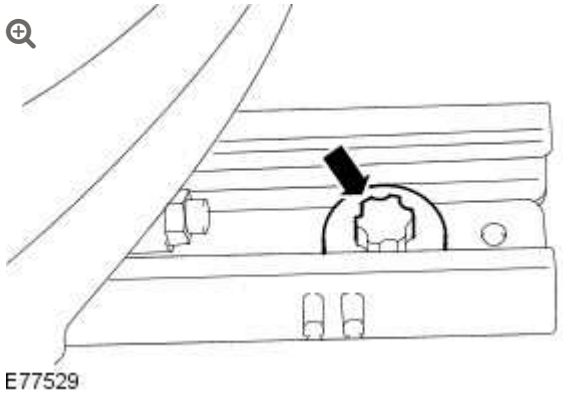

Release the LH front seat.

- Move the LH front seat fully backwards.
- Remove the 2 front seat front bolts.

5. Remove the RH front seat.
   For additional information, refer to: Front Seat (501-10 Seating, Removal and Installation).

6.

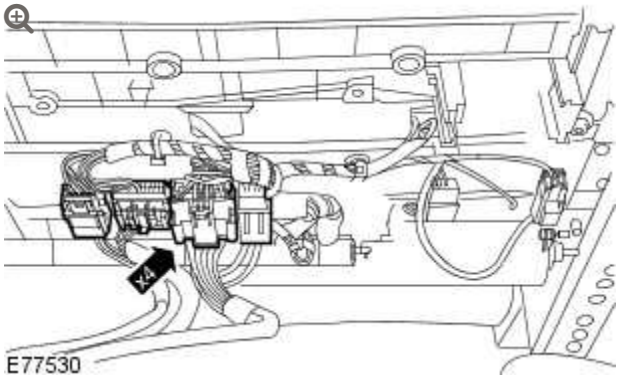

With assistance remove the LH front seat.

- Disconnect the 4 electrical connectors.

7.

NOTE:

Left-hand shown, right-hand similar.

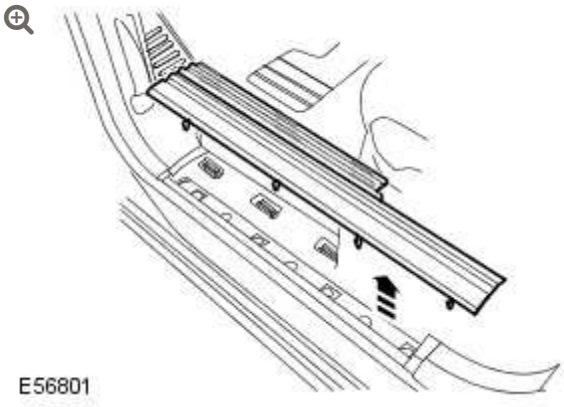

Remove the front scuff plate trim panel.

- Release the 7 clips.
- Repeat to the other side.

8.

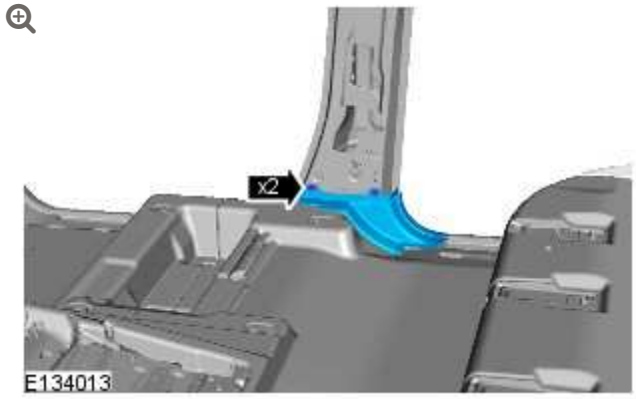

Remove the B-pillar floor covering trim panel.

- Remove the 2 clips.
- Repeat to the other side.

9.

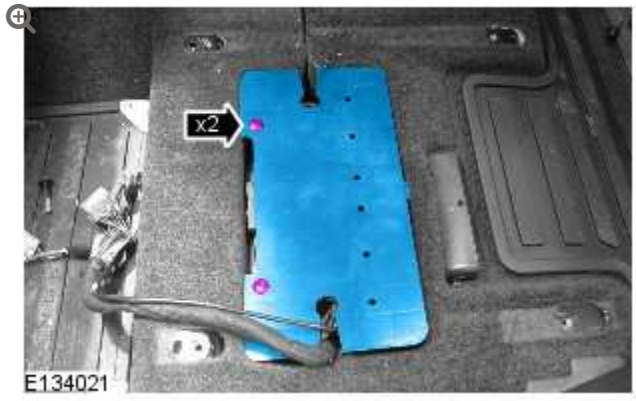

Remove the parking aid camera module cover.

- Remove the 2 scrivets.
- Repeat to the other side.

10.



Disconnect the camera wiring harness.

11.

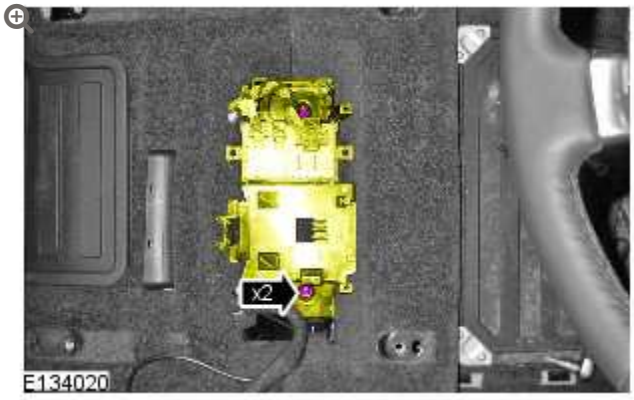

Release the seat heating module bracket.

- Remove the 2 nuts.

12.

NOTE:

Left-hand shown, right-hand similar.

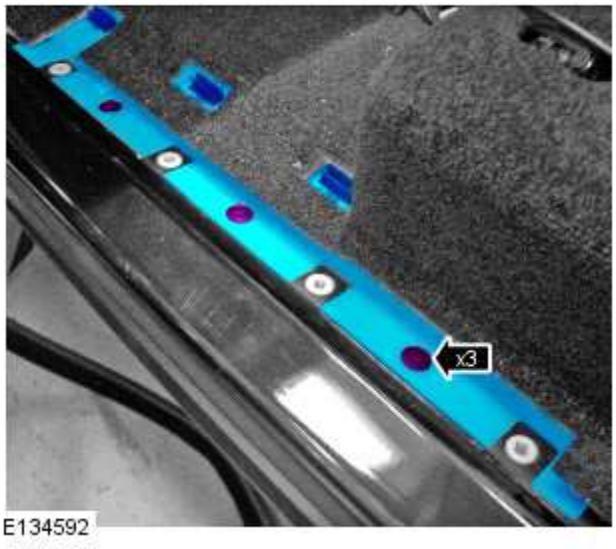

Remove the RH wiring harness cover.

- Remove the 3 clips.

13. Remove the cowl side trim panel.For additional information, refer to: Cowl Side Trim Panel (501-05 Interior Trim and Ornamentation, Removal and Installation).

14. **NOTE:**

Door shown removed for clarity.

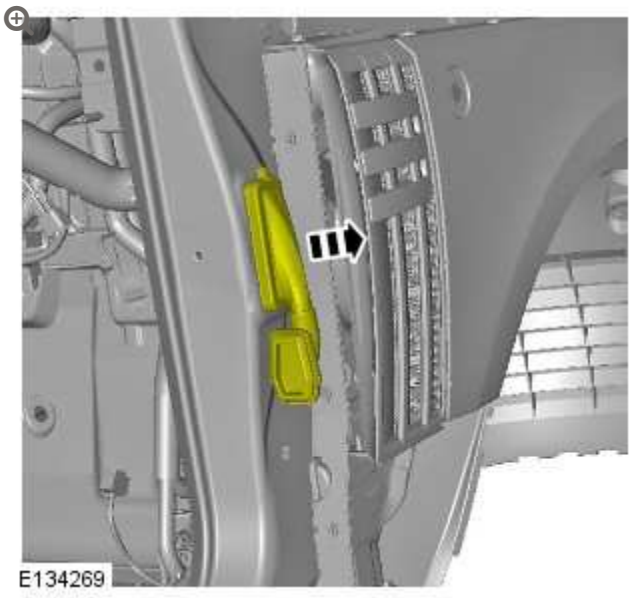

Release the gaiter.

15.

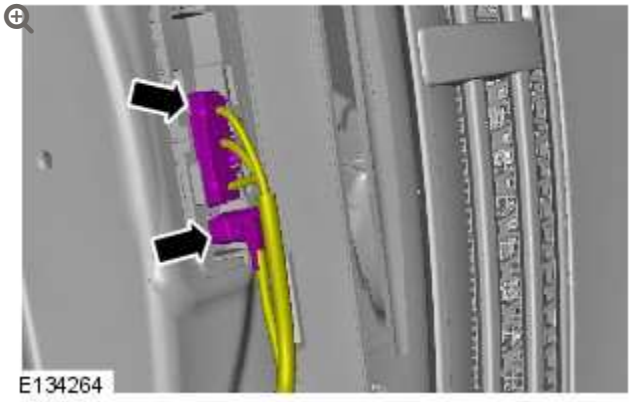

Disconnect the 2 electrical connectors.

16.

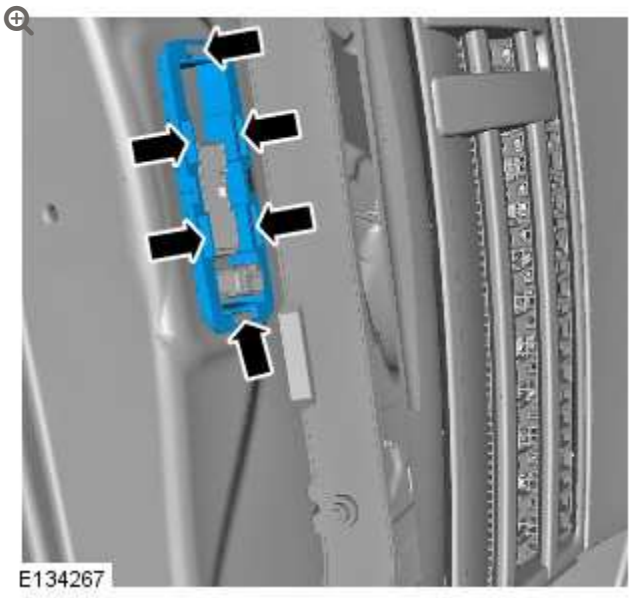

Remove the gaiter mounting bracket.

- Carefully release the 6 clips.

17.

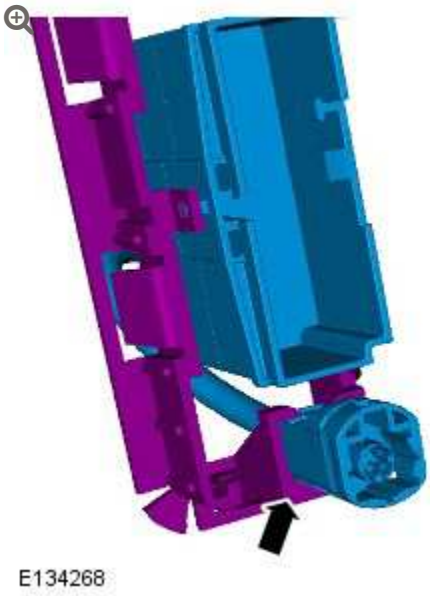

Release the electrical connector from the bracket.

18.

NOTE:

Some variation in the illustrations may occur, but the essential information is always correct.

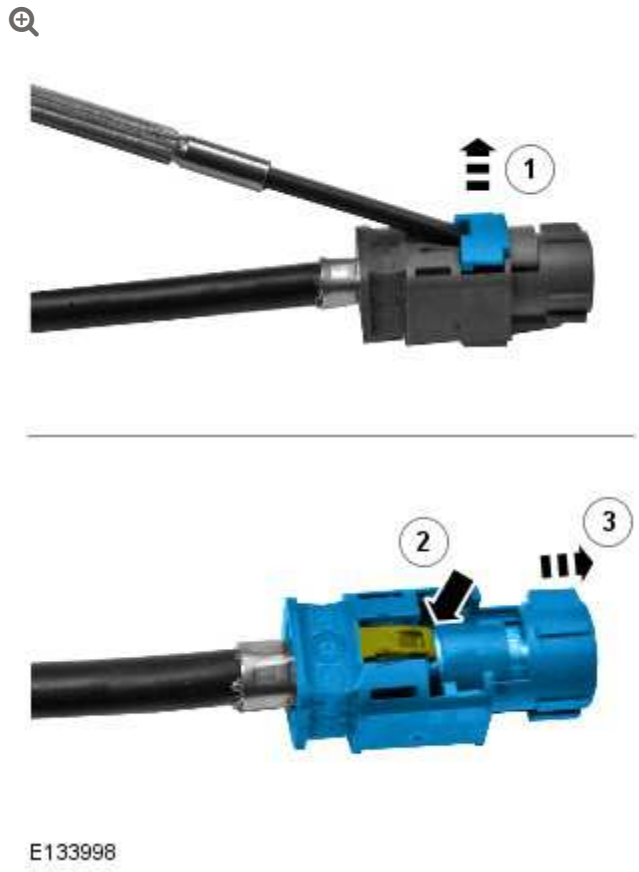

E133998

Remove the connector from the camera overlay wiring harness.

- Remove the locking tab.
- Carefully release the clip.
- Repostition the camera wiring harness through the A-pillar aperture.

INSTALLATION

1. **NOTE:**

Some variation in the illustrations may occur, but the essential information is always correct.

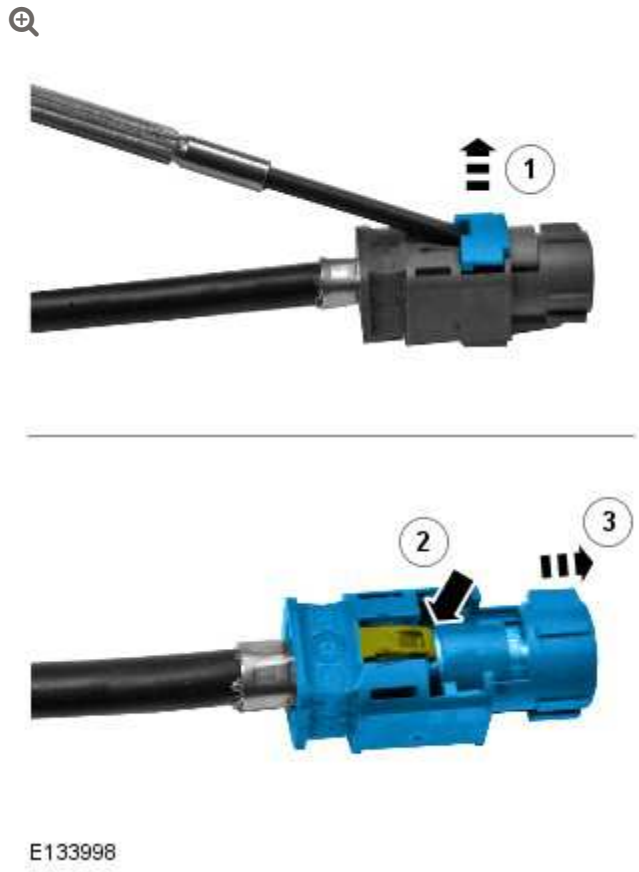

E133998

Remove the connectors from the camera overlay wiring harness.

- Remove the locking tab.
- Carefully release the clip.
- Apply suitable tape to protect the end of the camera overlay wiring harness.
- Repeat to the other connector.

2.

CAUTION:

Make sure that the camera overlay wiring harness is not bent excessively during this procedure. Failure to follow this instruction may result in damage to the harness.

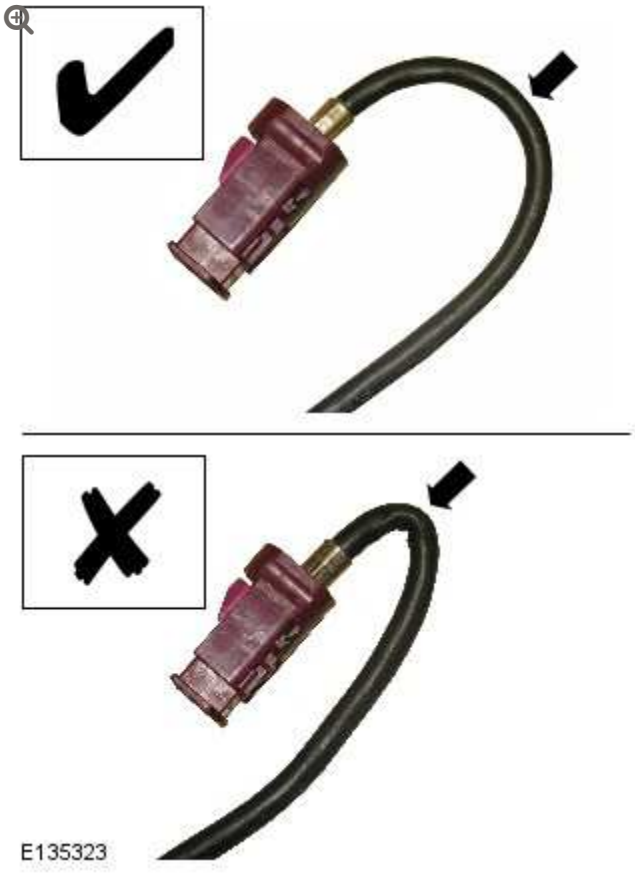

Install the camera overlay wiring harness.

3.

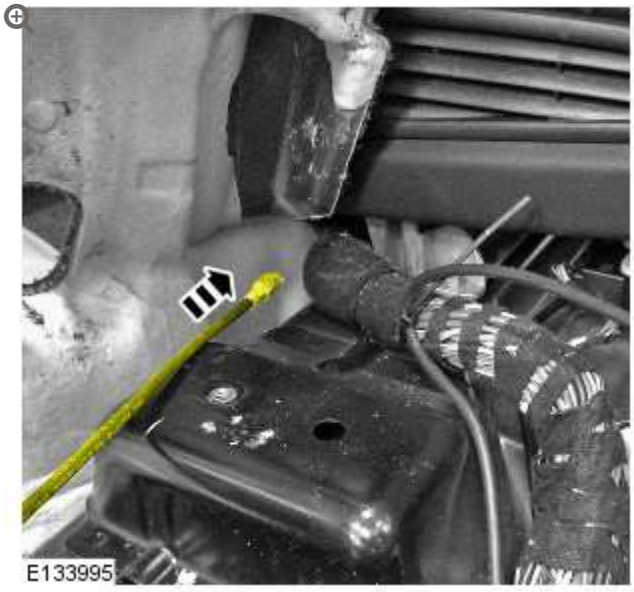

Insert the camera overlay wiring harness under the floor console.

- Route the camera overlay wiring harness along the main body wiring harness up to the parking aid camera module.

4.

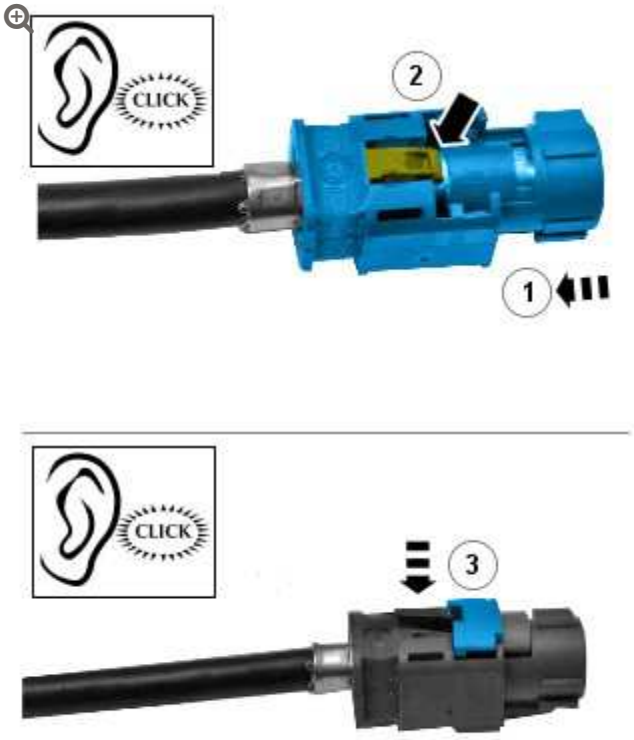

E134007

Install the connector to the camera overlay wiring harness.

- Remove the protective tape.
- Install the electrical connector.
- Secure the locking tab.

5.



Connect the camera overlay wiring harness.

6.

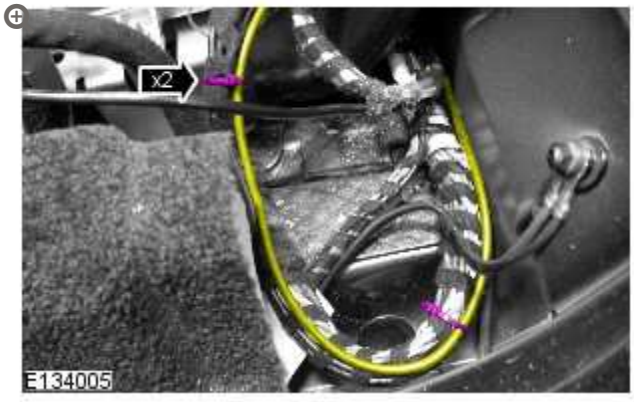

Using suitable tie straps, secure the camera overlay wiring harness to the main body wiring harness.

7. Feed the camera overlay wiring harness through the A-pillar aperture.

8. **NOTE:**

Some variation in the illustrations may occur, but the essential information is always correct.

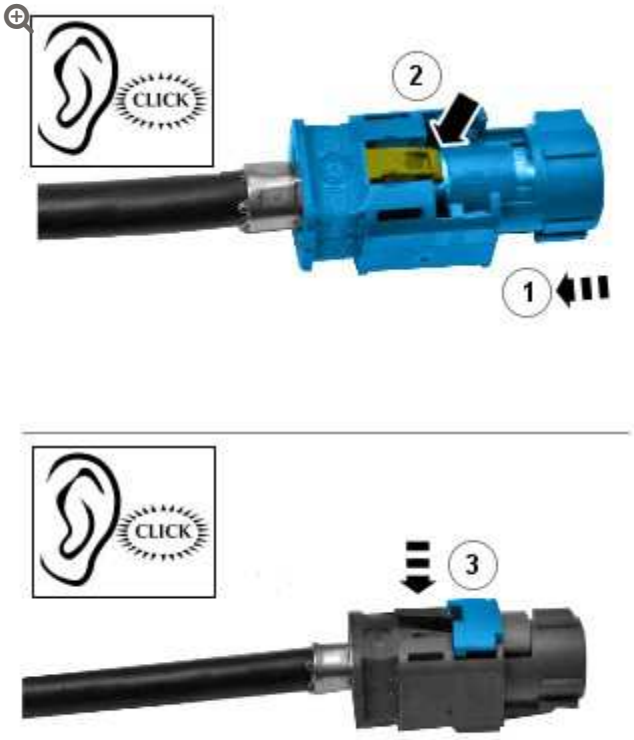

E134007

Install the connector to the camera overlay wiring harness.

- Remove the protective tape.
- Install the electrical connector.
- Secure the locking tab.

9.

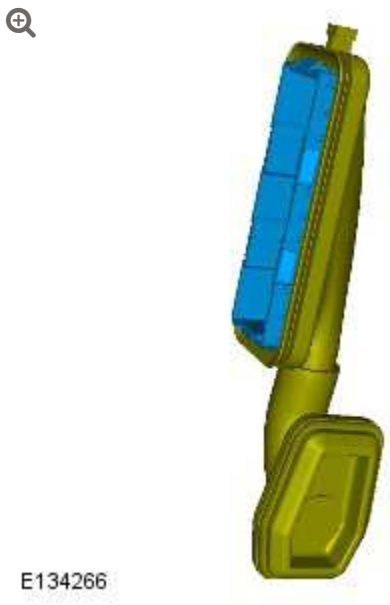

Secure the gaiter to the gaiter bracket.

10. **CAUTION:**

Make sure the electrical connectors are correctly installed and secured.

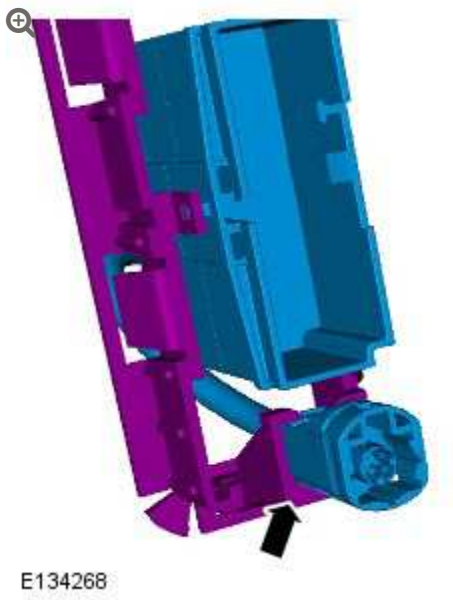

Secure the camera wiring harness.

11.

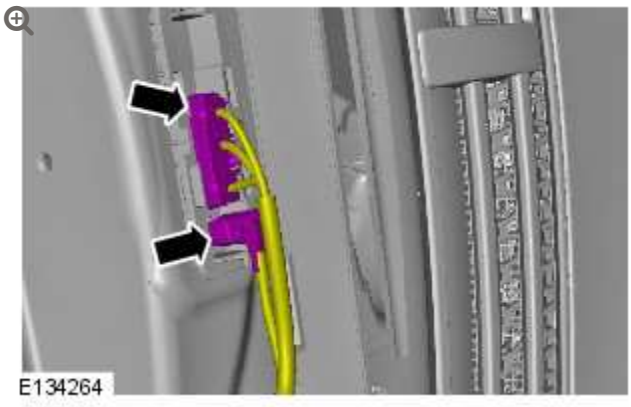

Connect the 2 electrical connectors.

12.

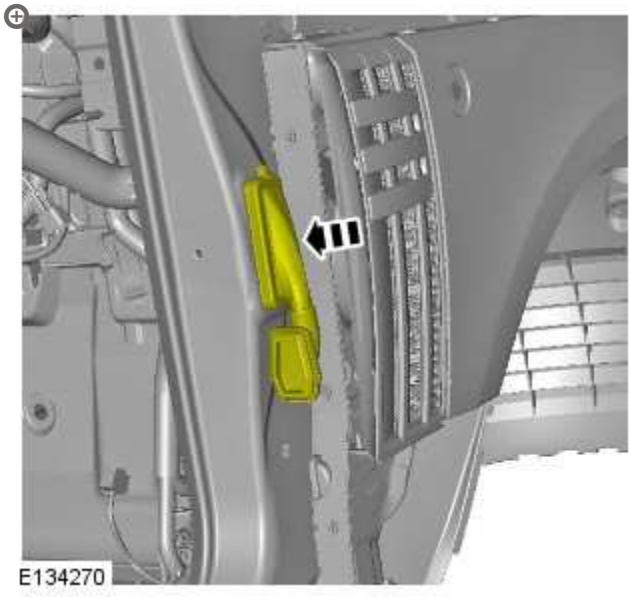

Secure the gaiter mounting bracket.

- Secure the 6 clips.

13.

NOTE:

Left-hand shown, right-hand similar.

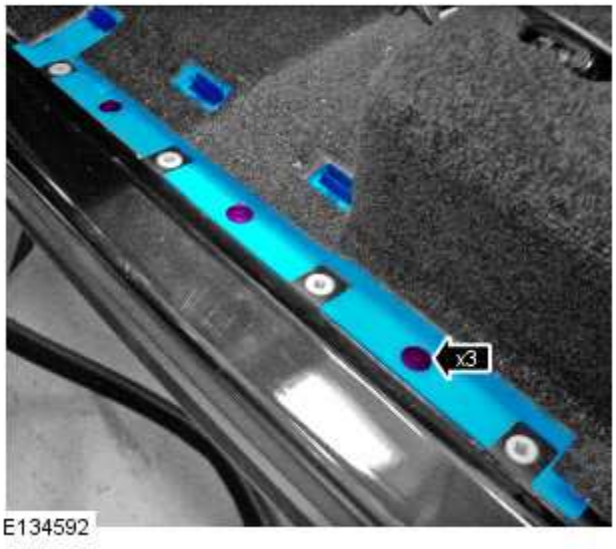

Install the RH wiring harness cover.

- Secure the 3 clips.

14. Install the cowl side trim panel. For additional information, refer to: Cowl Side Trim Panel (501-05 Interior Trim and Ornamentation, Removal and Installation).

15. 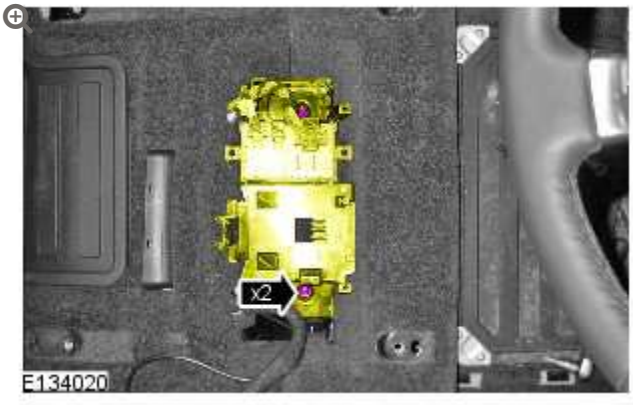

Secure the seat heating module bracket.

- Install the 2 nuts.

16.

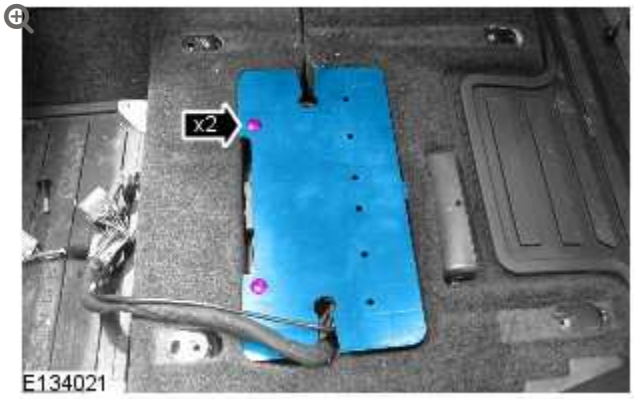

Install the parking aid camera module cover.

- Install the 2 scrivets.

17.

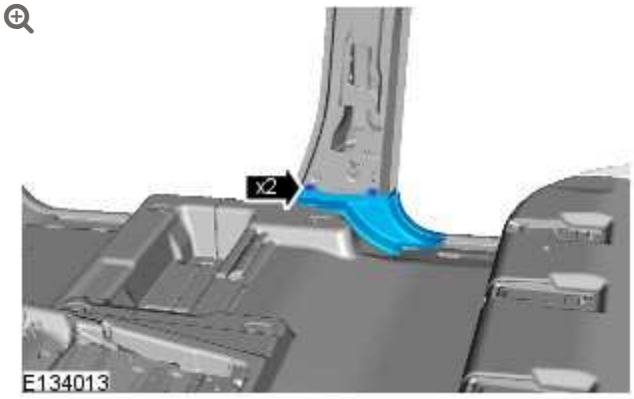

Install the B-pillar floor covering trim panel.

- Secure the 2 clips.
- Repeat to the other side.

18. Install the front scuff plate trim panel.

- Secure the 7 clips.
- Repeat to the other side.

19.

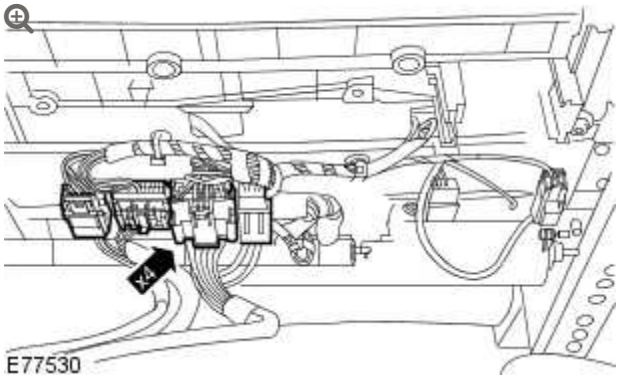

With assistance, install the LH front seat.

- Connect the 4 electrical connectors.

20. Install the RH front seat.
For additional information, refer to: Front Seat (501-10 Seating, Removal and Installation).

21. **NOTE:**

Make sure the 3 seat rail covers are fitted to their original positions. Note: The inner front seat rail does not have a seat rail cover.

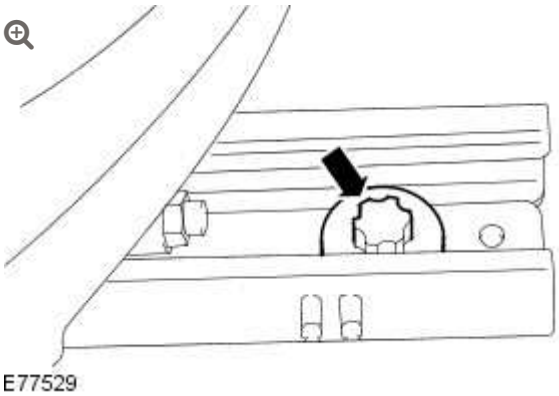

Install the 2 front bolts to the front seat.

- Align the front seat locating pegs.
- Position the front seat fully rearwards.

- Tighten the front seat front bolts to 45 Nm .

22. **NOTE:**

Make sure the 3 seat rail covers are fitted to their original positions. Note: The inner front seat rail does not have a seat rail cover.

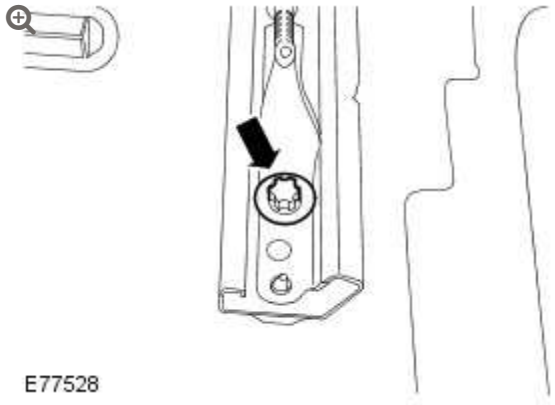

Install the 2 rear bolts to the front seat.

- Position the front seat fully forwards.
- Tighten the front seat rear bolts to 45 Nm.

23. Install the LH B-pillar upper trim panel.
For additional information, refer to: B-Pillar Trim Panel (501-05 Interior Trim and Ornamentation, Removal and Installation).

24. Repeat procedure for the other side.

WIRING HARNESSES

SIDE PARKING AID CAMERA WIRING HARNESS – FRONT DOOR SECTION (G1429572)

REMOVAL AND INSTALLATION

REMOVAL

1. **NOTE:**

Left-hand shown, right-hand similar.

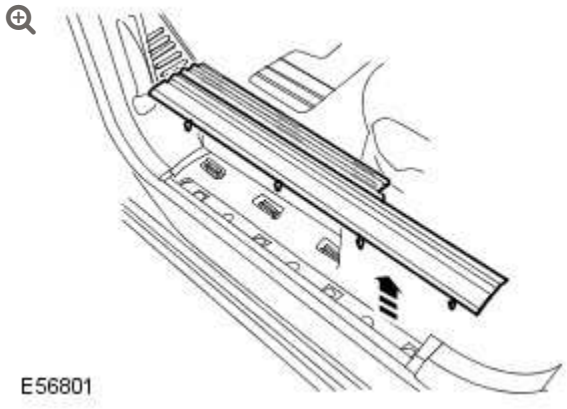

Remove the front scuff plate trim panel.

- Release the 7 clips.

2. Remove the cowl side trim panel. For additional information, refer to: Cowl Side Trim Panel (501-05 Interior Trim and Ornamentation, Removal and Installation).

3. **NOTES:**

   - Door shown removed for clarity.
   - Right-hand shown, left-hand similar.

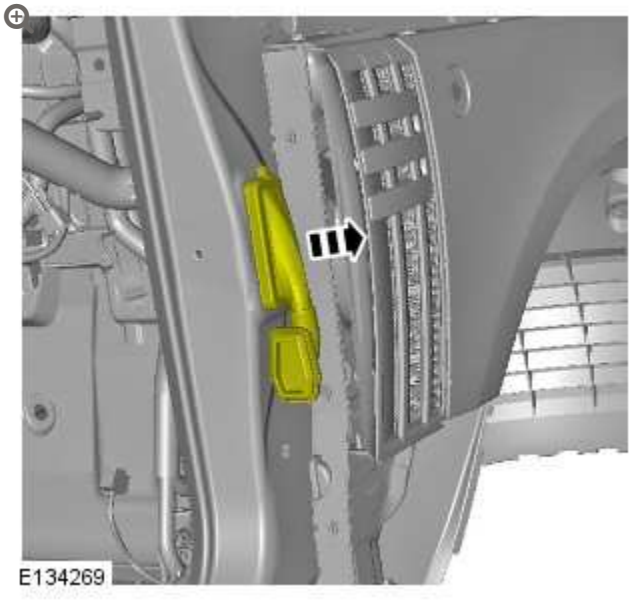

Release the gaiter.

4. **NOTE:**

   Right-hand shown, left-hand similar.

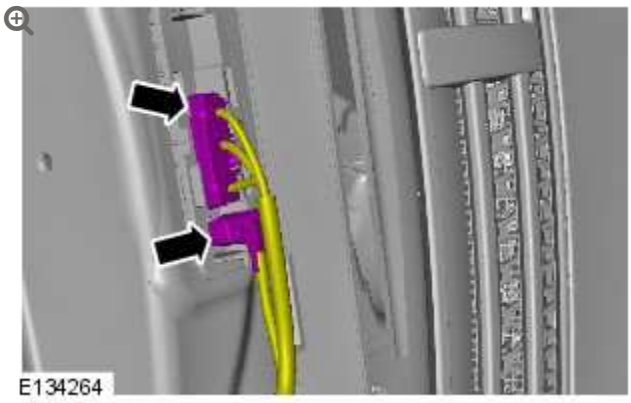

Disconnect the 2 electrical connectors.

5.

NOTE:

Right-hand shown, left-hand similar.

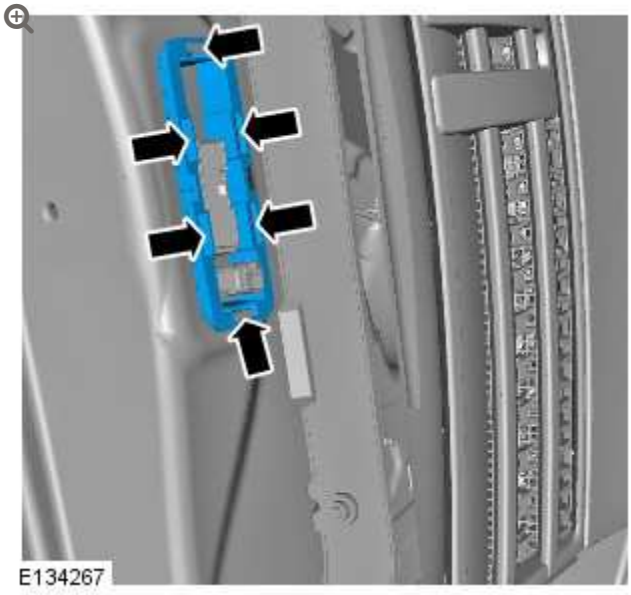

Remove the gaiter mounting bracket.

- Carefully release the 6 clips.

6.

NOTE:

Right-hand shown, left-hand similar.

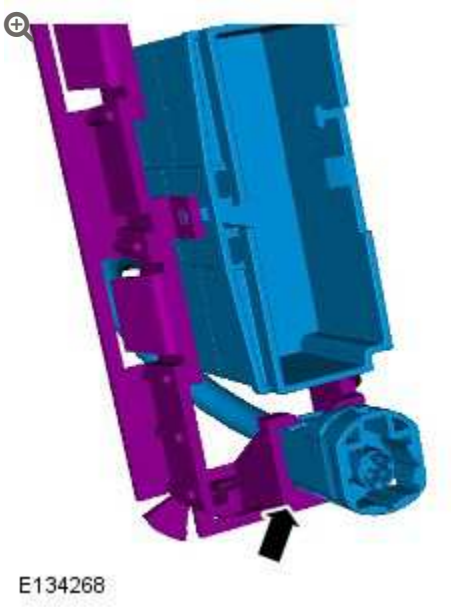

Release the electrical connector from the bracket.

7. Remove the front door speaker.
   For additional information, refer to: Front Door Speaker (415-03 Speakers, Removal and Installation).

8.

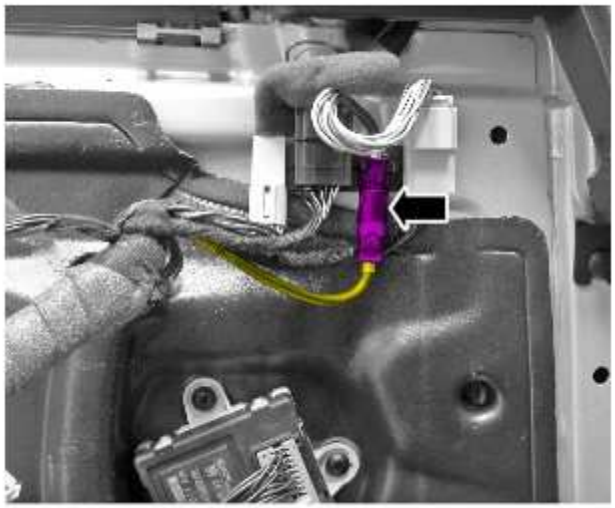

E136474

Disconnect the electrical connector.

INSTALLATION

1. **CAUTION:**

   Make sure that the camera overlay wiring harness is not bent excessively during this procedure. Failure to follow this instruction may result in damage to the harness.



Install the camera overlay wiring harness.

2.

NOTE:

Some variation in the illustrations may occur, but the essential information is always correct.

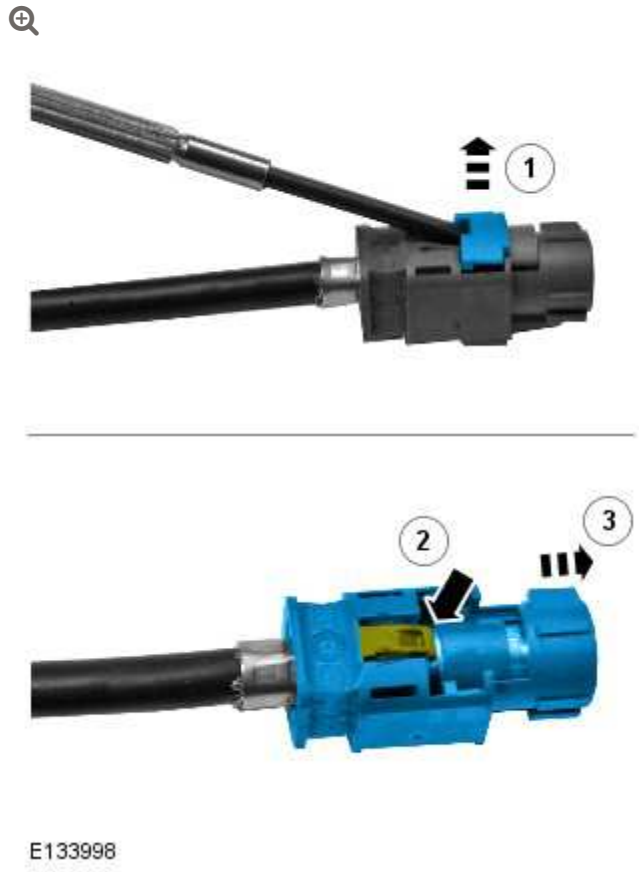

E133998

Remove the connector from the camera wiring harness.

- Remove the locking tab.
- Carefully release the clip.
- Apply suitable tape to protect the end of the camera wiring harness.

3.

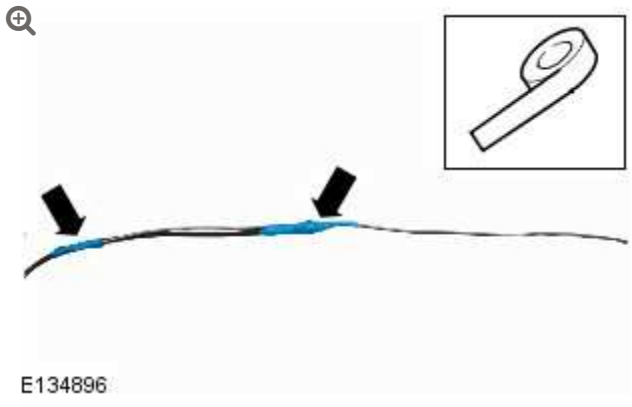

Using suitable tape, secure a suitable rod to the camera overlay wiring harness.

4.

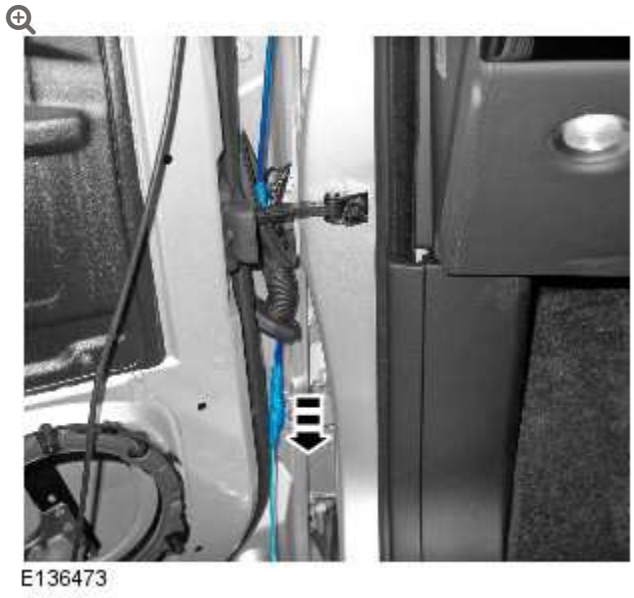

Carefully feed the camera overlay wiring harness through the gaiter.

5.

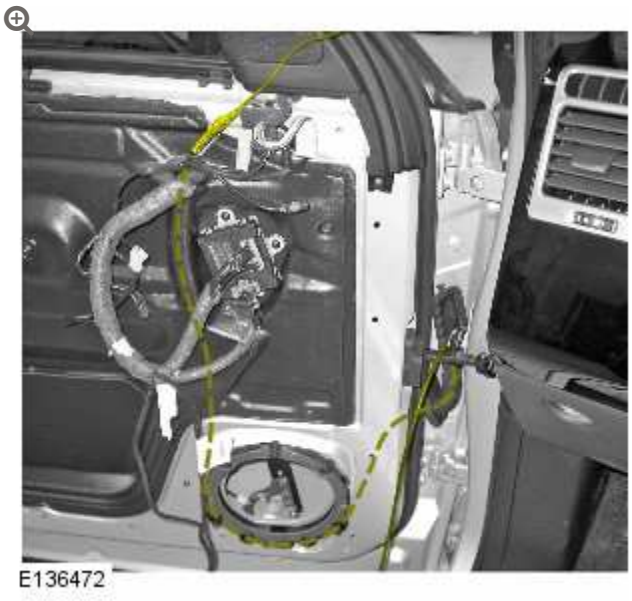

Carefully feed the camera overlay wiring harness along the door wiring harness to the door mirror.

6.

CAUTIONS:

- Make sure that the camera overlay harness is correctly routed and clear of the front door window regulator and motor. Failure to follow this instruction may result in damage to the vehicle.
- Make sure that excessive force is not used when installing the tie straps to the wiring harness. Failure to follow this instruction may result in damage to the vehicle.

Using suitable tie straps, secure the camera overlay harness to the door wiring harness.

7.

NOTE:

Some variation in the illustrations may occur, but the essential information is always correct.

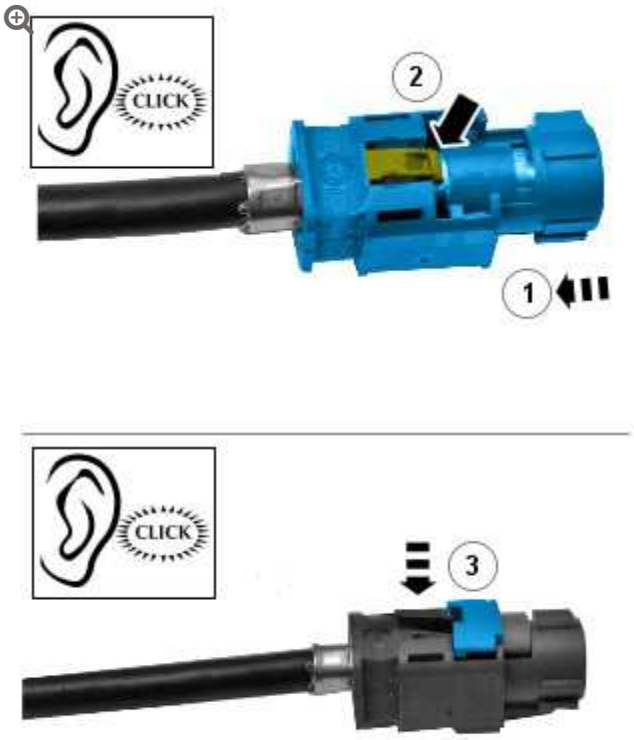

E134007

Install the connector to the camera overlay wiring harness.

- Remove the protective tape.
- Install the electrical connector.
- Secure the locking tab.

8.

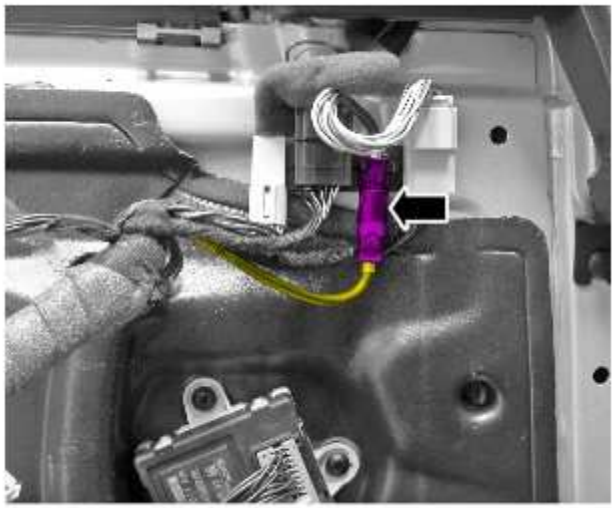

E136474

Connect the electrical connector.

9.

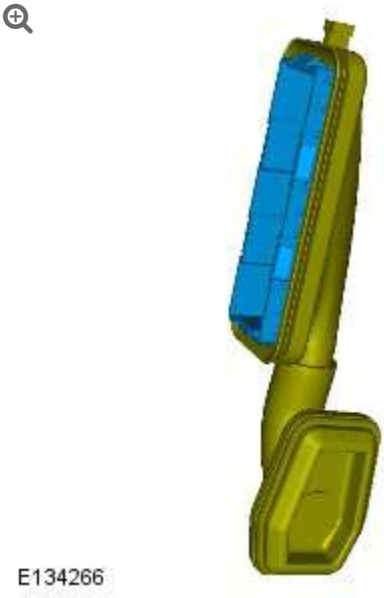

E134266

Secure the gaiter to the gaiter bracket.

10.

CAUTION:

Make sure the electrical connectors are correctly installed and secured.

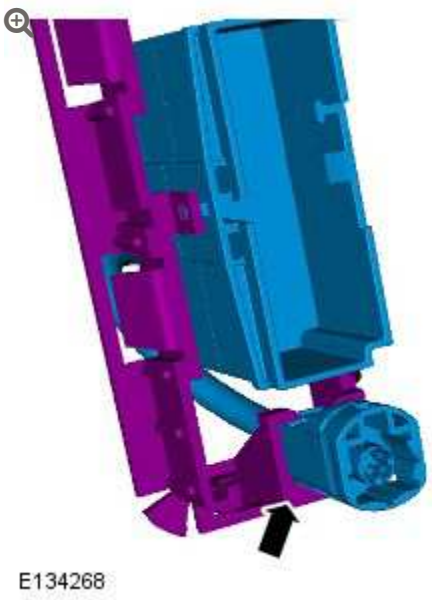

Secure the camera wiring harness.

11.

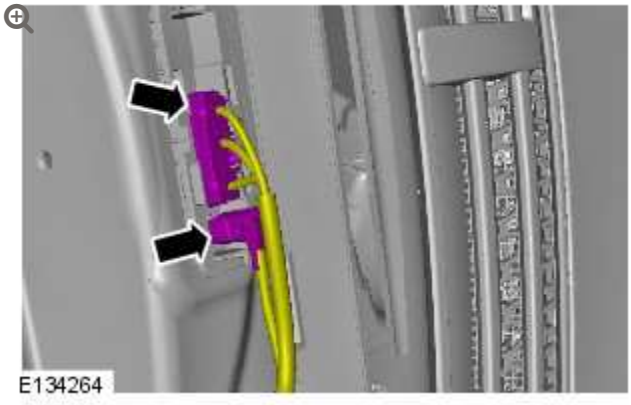

Connect the 2 electrical connectors.

12.

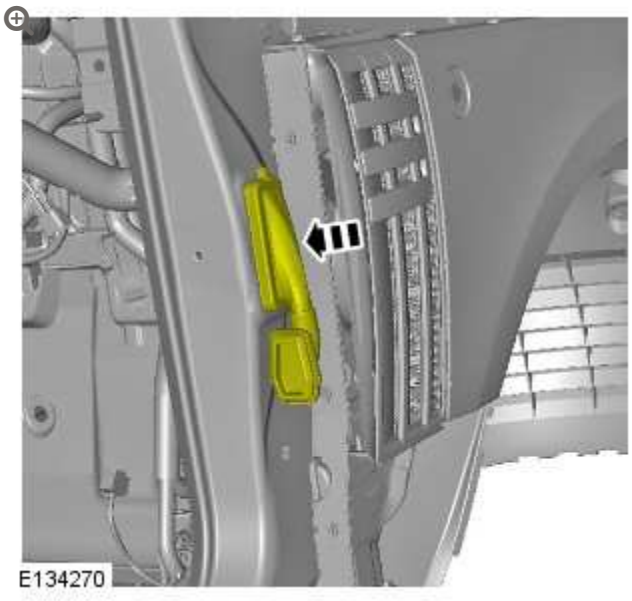

Secure the gaiter mounting bracket.

- Secure the 6 clips.

13. Install the LH cowl side trim panel. For additional information, refer to: Cowl Side Trim Panel (501-05 Interior Trim and Ornamentation, Removal and Installation).

14. **NOTE:**

Left-hand shown, right-hand similar.

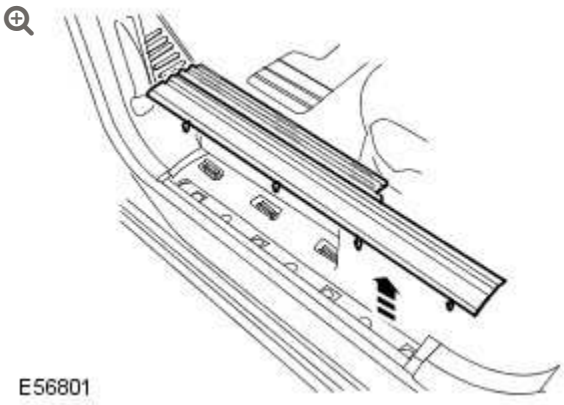

Install the front scuff plate trim panel.

- Secure the 7 clips.

15. Install the front door speaker.
    For additional information, refer to: Front Door Speaker (415-03 Speakers, Removal and Installation).

WIRING HARNESSES

WIRING HARNESS REPAIR

(G1341843)

GENERAL PROCEDURES

1. For additional information, refer to: Wiring Harness (418-02 Wiring Harnesses, Description and Operation).

WIRING HARNESSES

DESCRIPTION AND OPERATION

APPROVED PROBING AND REPAIR METHODS

The purpose of this document is to identify the approved methods to promote an effective and efficient diagnosis and minor repair to the:

- permitted electrical wiring harnesses, connectors and cables
  - See Electrical Wiring Harness Repair.
- Media Orientated System Transport (MOST) network harnesses, connectors and fiber optic cables
  - See MOST Network Harness Repair.

REPLACEMENT REPAIR EQUIPMENT

The repair processes in the following information identifies specific repair equipment needed to complete a repair to the required standard.

Replacement repair equipment can be ordered from the equipment workshop website:

http://jlrequipment.service-solutions.com

ELECTRICAL CONNECTOR PROBING

Only 2 methods of electrical connector probing are allowed.

1. Probing at the rear of unsealed electrical connectors (see illustration E190832).

2. Probing on the conductor crimp of an extracted terminal (see illustration E190928).

- The conductor crimp is the portion crimped to the non-insulated wire.
- This method may be used on sealed or unsealed connectors, but method 1 is preferred for unsealed connectors.

CAUTIONS:

- A suitable sized probe must be used. If the probe is larger than the electrical connector aperture, then damage to the electrical connector will occur.
- The probe must only be inserted into the rear of the electrical connector for a distance sufficient to contact the terminal.
- Take care not to bend or distort any part of the metal terminal wire crimp area with the probe.
- Before extracting any terminals, refer to the **Electrical Connector Terminal Extraction** and **Extraction Tools** sections of this document for more information.
- Probing must **not** be carried out on; either the connector contact area or the portion of the terminal that is crimped to the insulated part of the wire.
- Make sure the terminal is correctly and securely located in the electrical connector after re-installation.

Method 1

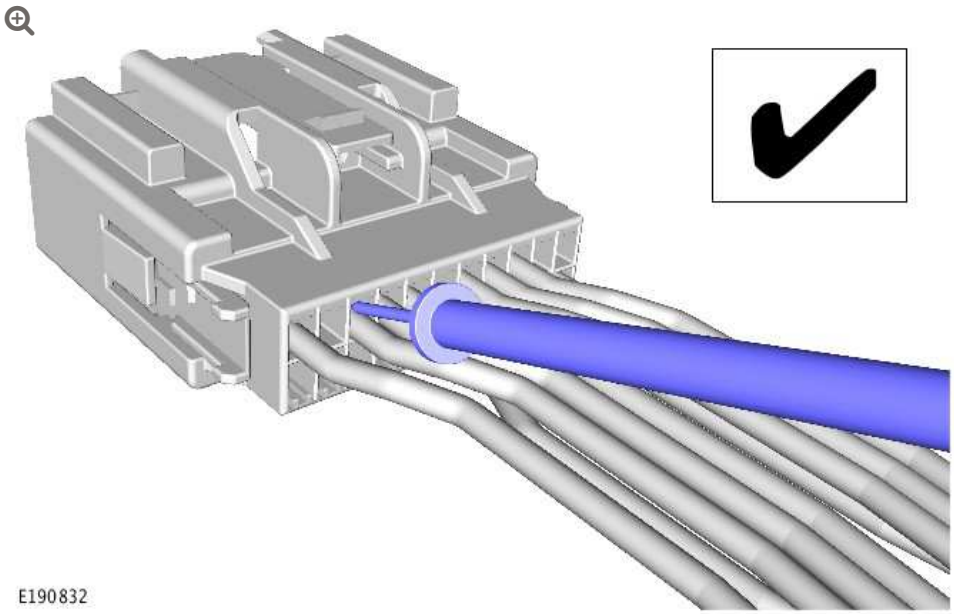

Method 2

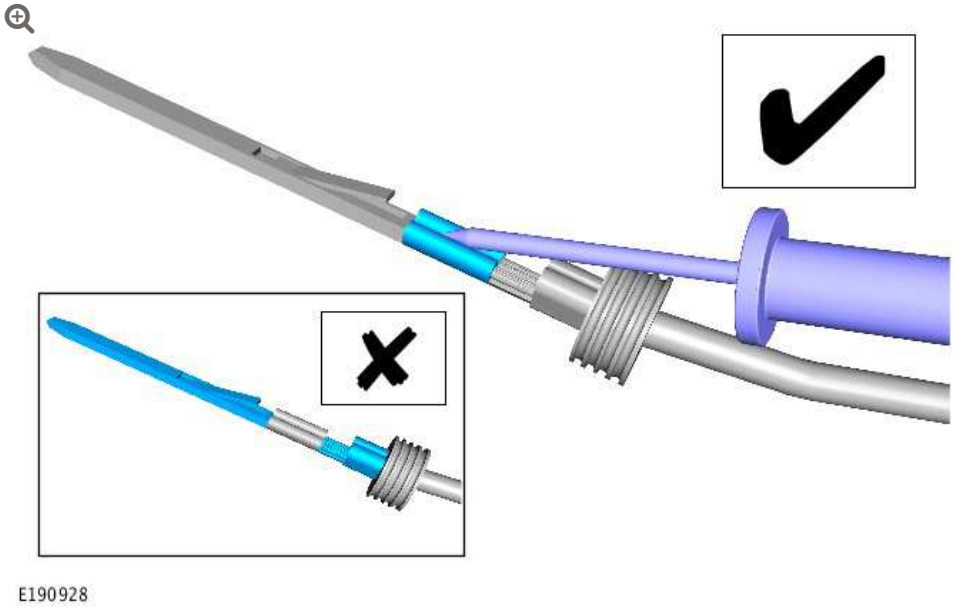

The following 2 methods of electrical connector probing are not allowed.

1. Probing at the rear of sealed electrical connectors (see illustration E190926).

2. Probing at the electrical connector contact area (see illustration E190927).

Method 1

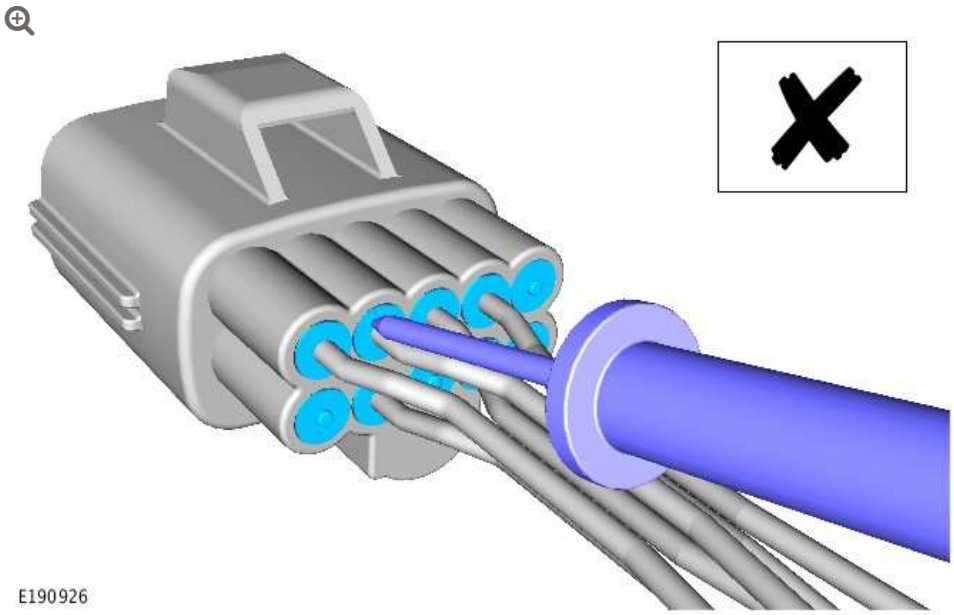

Method 2

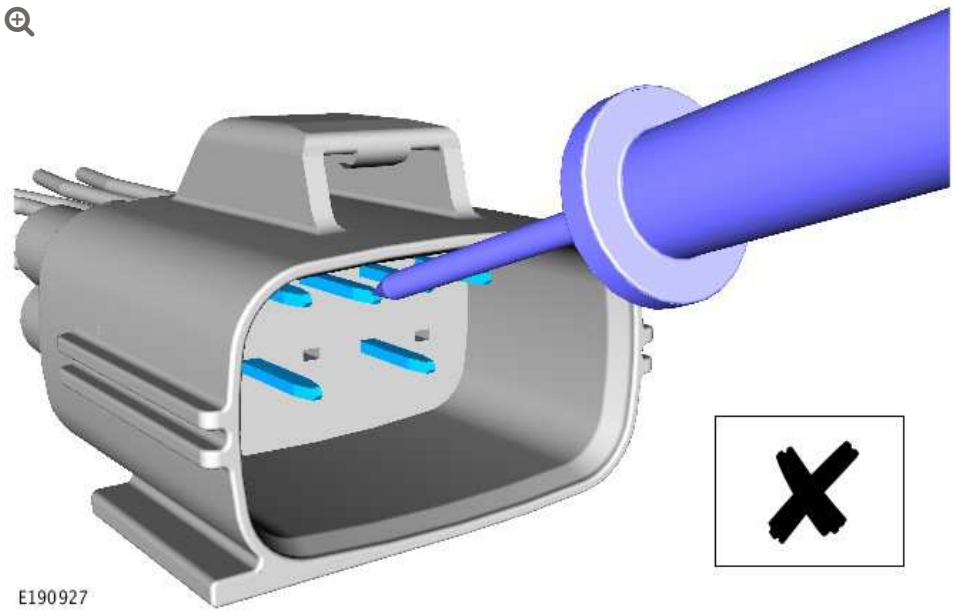

LIVE PROBING ON SEALED CONNECTORS

WARNINGS:

- **This procedure must never be carried out on any of the following. Failure to follow this instruction may result in personal injury;**
  - Supplemental Restraint System (SRS)
  - Pedestrian protection system
  - Throttle Control circuits
  - Speed Control circuits
  - Link lead assembles, which are unique to safety critical circuits such as Anti-lock Brake System (ABS) and thermocouple circuits. An example of this is the ABS wheel speed sensors with molded connectors
- This procedure must only be carried on wire with a cross sectional area of 0.5mm squared or less.

CAUTIONS:

- The link lead used in this procedure must have a cross sectional area of at least 0.5mm squared.
- The battery ground cable must be disconnected before any electrical connectors are disconnected / reconnected.

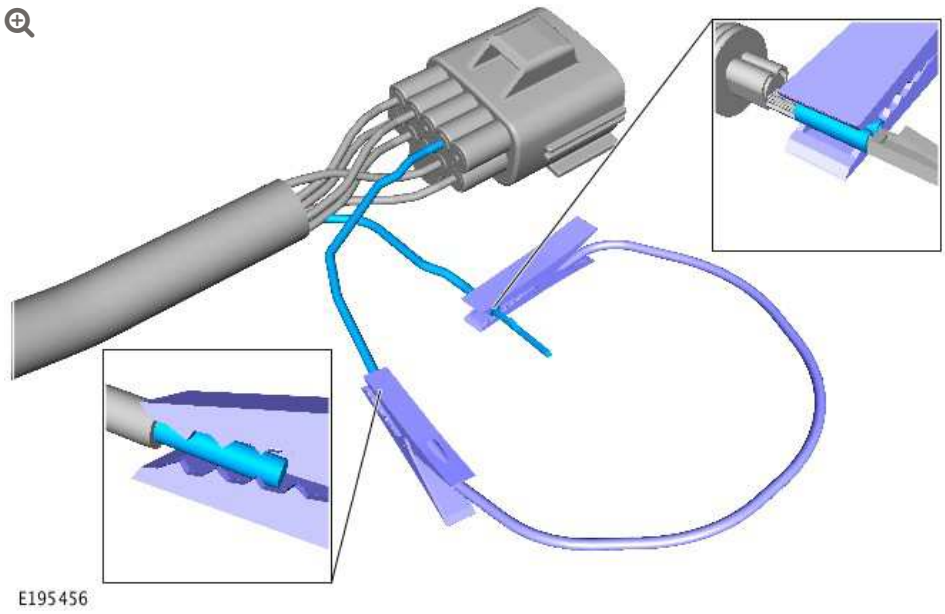

1 Disconnect the battery ground cable.

2 **CAUTION:**

> Before extracting any terminals, refer to the **Electrical Connector Terminal Extraction** and **Extraction Tools** sections of this document for more information.

Extract the terminal to be tested from the electrical connector

3 Insert a substitute wire with the the same terminal and cross sectional area of the previously extracted wire, into the vacated position of the electrical connector.

4 **CAUTION:**

> The link lead clip must only be attached to the portion of the extracted terminal; that is crimped directly to the section of non-insulated wire.

Attach one end of the link lead to the original wire terminal.

5 **CAUTION:**

> The link lead clip must only be attached to the non-insulated section of the wire.

Attach the remaining end of the link lead to the substite wire.

6 Reconnect the electrical connector.

7 Reconnect the battery ground cable and begin the test.

ELECTRICAL WIRING HARNESS REPAIR

Repairs may only be made to cables and connectors which have been mechanically, not electrically damaged. It also applies where the whole extent of the damage can be clearly identified and rectified.

Care and neatness are essential requirements in making a perfect repair.

CAUTION:

Under no circumstances should repair be attempted to the following:

1. Supplement Restraint System (SRS) firing circuits.
2. Pedestrian Protection System firing circuits.
3. Throttle Control circuits.
4. Speed Control circuits.
5. Link lead assembles, which are unique to safety critical circuits such as Anti-lock Brake System (ABS) and thermocouple circuits. An example of this is the ABS wheel speed sensors with molded connectors.
6. Screened cables, leads and wiring harness(s).

If any harness(s) with defective electrical connector terminals or cables from the above circuits give cause for concern, new components must be installed.

CAUTIONS:

- Do not attempt to repair or reform a damaged electrical connector terminal. A damaged electrical connector terminal must be replaced using the correct pre-terminated lead.
- A ground point connector with multiple wires to the connector must not be repaired as a complete connector. If a damaged wire is identified, the wire can be repaired individually using the correct pre-terminated lead.
- Do not attempt the repair of damaged battery, hybrid and power cables.

  These types of cable generally have a cross sectional area larger than 6mm² and must only be replaced. If the original cable is contained within the harness bundle the original cable must be left in the harness and a replacement cable attached to the harness along the original harness route.

  The replacement cable must follow the original cable route to avoid the risk of introducing electrical interference issues. The original cable connections must be cut from the cable at both ends and discarded. The exposed cable ends must be free from sharp edges and strands of wire and must be over taped to prevent injury before being taped back to the main harness.

ELECTRICAL WIRING HARNESS REPAIR COMPONENTS

The electrical wiring harness repair components comprises of:

- Pre-terminated leads of different sizes and types
- Three sizes of splice connectors
- A selection of colored cable identification sleeves
- Two sizes of glue lined heat shrink sleeves

NOTE:

> A suitable heat source, for shrinking the glue lined heat shrink sleeves will be required.

The pre-insulated diamond grip range of electrical connector terminals and in-line splice connectors are the only acceptable product for the repairs of wiring harnesses. The splice connectors not only grip the wire but also the insulation, making a very secure joint.

Pre-Terminated Lead and Splice Connectors

The pre-terminated lead(s) are supplied with the insulation in one of three colors, red, blue or yellow. The colors indicate the cable size range and not any particular circuit; refer to the Electrical Wiring Harness Repair Relationship Table in the Repair Methods section.

Splice connectors are also supplied with red, blue or yellow coverings, which must be matched to the pre-terminated lead insulation color.

For ease and speed, some of the pre-terminated lead(s) may already have the insulation partly stripped at the splice end. If the repair requires insulation to be stripped from the cable, refer to the Electrical Wiring Harness Repair Relationship Table in the Repair Methods section for the correct length of insulation to be stripped.

Wire Chart and Service Repair Information

This information is part of the relevant Electrical Reference Library (ERL) or Interactive Electrical Wiring Diagrams (iEWD) available through TOPIx.

NOTE:

> Access to information about the pre-terminated leads for vehicles supported by the iEWD is achieved by hovering the screen pointer over the relevant connector number and left-clicking.

Once the relevant connector housing has been identified, refer to the associated Wire Chart and Service Repair Information to make sure the installation of pre-terminated leads or wiring harnesses are completed in the approved manner.

- Identify the connector cavity in which the terminal needs replacing
- Make a note of the cross sectional area of the associated wire
- Make a note of the part number of the appropriate pre-terminated lead
- Make a note of the correct terminal extraction tool (where applicable)

Before commencing a wiring harness repair, always make sure the correct pre-terminated leads and associated repair parts have been ordered using the Jaguar/Land Rover parts ordering system.

Some of the pre-terminated leads have seals installed to the insulation for sealed connector applications. Where, as part of a repair, sealed terminals are removed, it is essential that those terminals are replaced by sealed pre-terminated leads.

Wire chart and service repair information also includes:

- The destination of the cable

- The applicable tools and associated other parts necessary to make sure the pre-terminated lead is correctly installed in the approved manner

CAUTIONS:

- Where the repair procedure indicates that a glue lined heat shrink sleeve should be applied, apply sufficient heat to the glue lined heat shrink sleeve to melt the glue in order to provide a water tight seal. Do not over heat the glue lined heat shrink sleeve so that the wiring harness insulation becomes damaged.
- Do not use any heat shrink sleeve other than the approved glue lined heat shrink sleeve specified in the repair procedure.

Glue Lined Heat Shrink Sleeving

Two sizes of glue lined heat shrink sleeving are available. Each heat shrink sleeve contains a sealant glue. These must be used when connecting wiring harness(s) or electrical connector terminal(s) at all times. The smaller diameter glue lined heat shrink sleeve is to be used with the red and blue splice connectors and the larger diameter glue lined heat shrink sleeve with the yellow splice connectors.

Wiring Harness Cable Identification Sleeves

A selection of colored sleeves are available for maintaining the wiring harness cable identification on the pre-terminated lead.

The sleeve identification packs are available to suit the 3 cable size ranges of Red, Blue and Yellow. Each sleeve identification pack contains 50 of each of the following colored sleeves:

- Black

- Brown
- Red
- Orange
- Yellow
- Green
- Blue
- Violet
- Grey
- White

Place the correct colored sleeve(s) over the pre-terminated lead insulation as near to the electrical connector as possible with the main wiring harness cable color nearest to the electrical connector.

For example, if the original wiring harness cable color is green with a black trace, put the green wiring harness cable identification sleeve on the pre-terminated lead first, followed by a black sleeve, slide both sleeves along the wiring harness cable to the electrical connector terminal.

Wiring Harness Repair Parts

NOTE:

Repair components can be ordered via the Jaguar/Land Rover parts ordering system.

DESCRIPTION	PART NUMBER	QUANTITY
Glue Lined Heat Shrink Sleeve Pack – small diameter	418-104	25 per pack
	418-105	

DESCRIPTION	PART NUMBER	QUANTITY
Glue Lined Heat Shrink Sleeve Pack – larger diameter		10 per pack
Case Assembly Comprising – carry case, lid, inner lid, base, insert, trays foam spacers	418-106	1
Splice Connector – Red	418-107	50 per pack
Splice Connector – Blue	418-108	50 per pack
Splice Connector – Yellow	418-109	20 per pack
Sleeve Identification Pack – for Red insulation	418-112	500
Sleeve Identification Pack – for Blue insulation	418-113	500
Sleeve Identification Pack – for Yellow insulation	418-114	500

WIRING HARNESS REPAIR TOOLS

NOTE:

Replacement repair equipment can be ordered from the equipment workshop website; refer to the Replacement Repair Equipment in the Introduction section.

The wiring harness repair tools comprises of:

- A selection of extraction tools
- A wire cutter and insulation stripper
- Crimpers

Extraction Tools

The extraction tools are used to remove a terminal from an electrical connector. Refer to the Wire Chart and Service Repair Information

for the correct extraction tool for each terminal (where applicable). Each extraction tool has been specially designed to extract a particular type of electrical connector terminal. The use of any other tool is not recommended and is liable to cause damage to the electrical connector.

CAUTION:

Inspect the electrical connector housing for evidence of damage which may affect the security of a terminal inside the connector housing, the operation of the anti-backout device and the secure fitment of the connector housing to the intended component/connector housing. Replace a damaged electrical connector housing.

Insulation (Wire) Stripper

By pressing the outer edges of the wiring harness cable length stop together the adjuster can be slid up or down the jaw. This decreases or increases the length by which the cable insulation will be stripped from the pre-terminated lead or wiring harness cable.

NOTE:

Some wiring harness insulation may be harder and require more effort to make a clean strip but exercise care not to damage the wire.

Insulation (Wire) Stripper

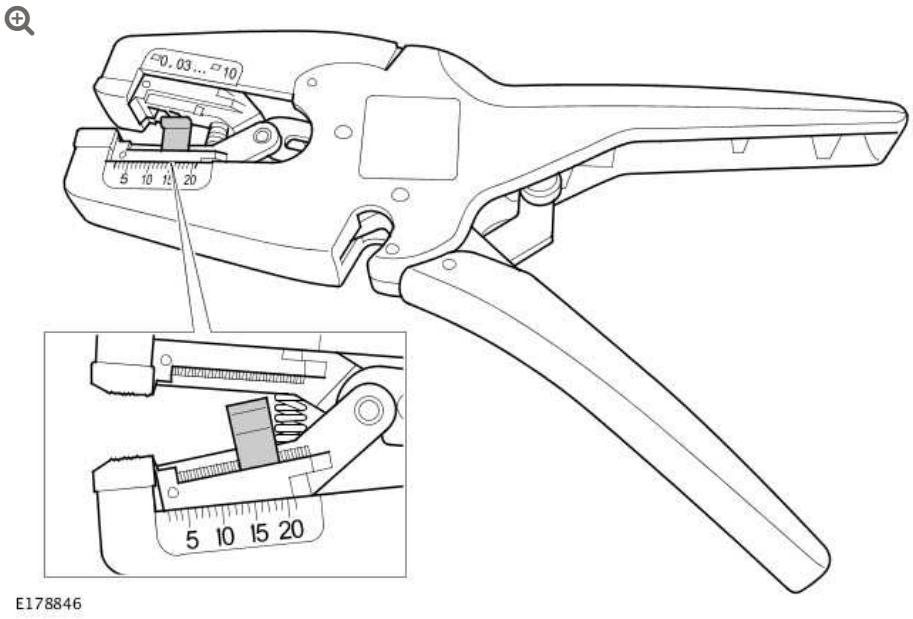

The adjuster has a position indicator to align with a graduated scale and this sets the correct length in millimeters, of insulation to be stripped. The amount of insulation to be stripped is shown in the Electrical Wiring Harness Repair Relationship Table.

The following illustration shows the insulation stripper tool and a wiring harness correctly gripped in the jaws. A wire cutter is provided on the outer side of the fixed jaw.

Cable Correctly Gripped in Stripper Blades

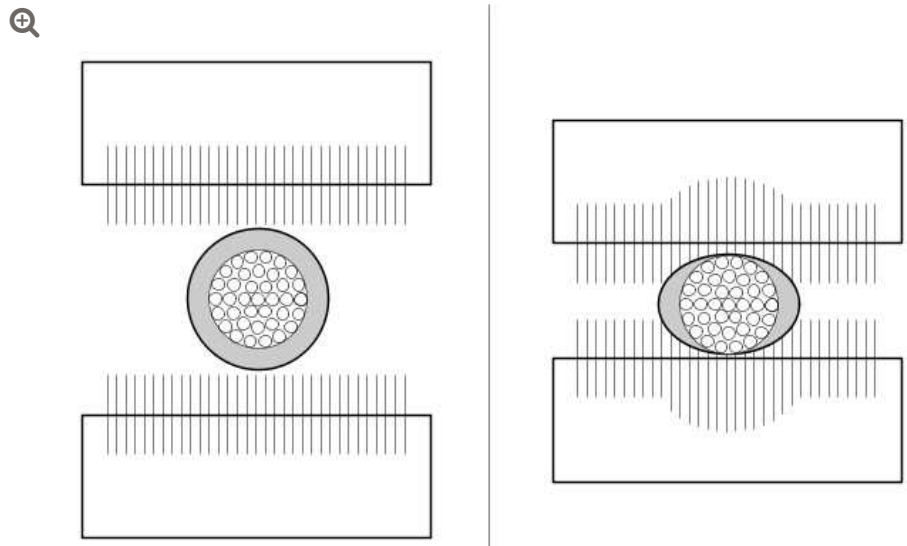

E178865

Crimpers

The crimpers have a moving jaw and a stationary jaw, with three different sized crimping enclosures. Each of the enclosures are identified by a red, blue or yellow colored dot which corresponds to the three colors of the pre-terminated leads and splice connector.

Crimpers

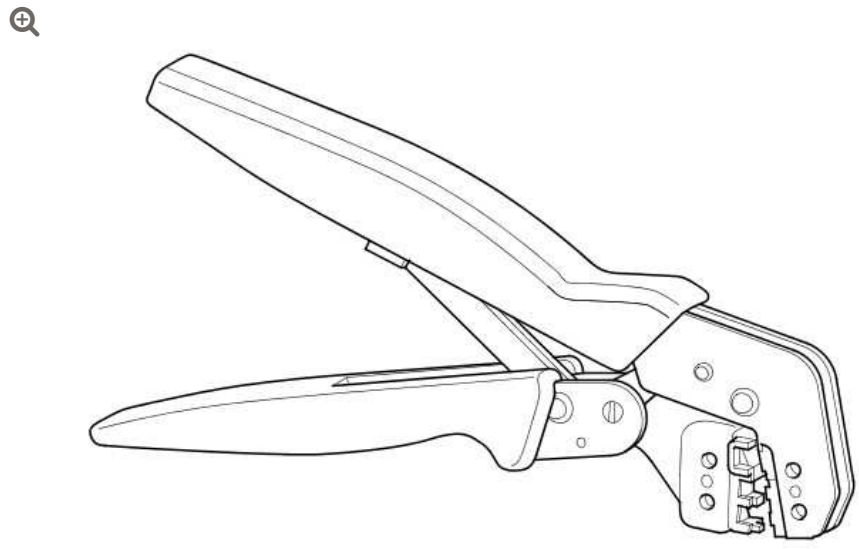

E178866

NOTE:

Replacement repair equipment can be ordered from the equipment workshop website; refer to the Replacement Repair Equipment in the Introduction section.

DESCRIPTION	PART NUMBER	QUANTITY
Crimpers	418-116A	1
Wire Stripper	418-672	1

APPROVED ELECTRICAL WIRING HARNESS REPAIR METHODS

CAUTION:

Several different types and sizes of terminal may be found in a single electrical connector housing.

It is necessary to identify:

- The conductor (wire) size of the affected wiring harness
- The electrical connector range from which the damaged wiring harness is to be removed
- The electrical terminal type

Use of the approved diagnostic tool will greatly assist in the quick identification of electrical connectors and faulty pin terminal(s).

Reference can also be made to the ERL and iEWD available through TOPIx, to identify wiring harness(s) and electrical connector(s).

Use the Electrical Wiring Harness Repair Relationship Table to identify the correct splice connector to suit the wiring harness conductor (wire) size, which can be related to a suitable pre-

terminated lead by the color of the insulation. The table also identifies the correct length of insulation to be stripped from the wiring harness lead.

Electrical Wiring Harness Repair Relationship Table

CABLE SIZE RANGE	SPLICE CONNECTOR	STRIP LENGTH
0.35 mm^2 to 1.50 mm^2	RED	6.00 to 7.00 mm
1.00 mm^2 to 2.50 mm^2	BLUE	6.00 to 7.00 mm
4.00 mm^2 to 6.00 mm^2	YELLOW	9.00 to 9.50 mm

Electrical Connector Terminal Extraction

It must be noted that some electrical connector(s) have anti-backout devices which prevent the terminals from being removed from the electrical connector. Some examples of these are shown in following illustrations. The anti-backout device must be released before attempting to remove the terminal from the electrical connector. Some anti-backout devices require a special tip to release the device. Please refer to the ERL for the correct tool(s) to use (where applicable).

Various types of electrical connector have seals installed internally or externally to prevent moisture ingress. These normally do not have to be removed but make sure that they are installed when the electrical connectors are connected.

CAUTION:

Inspect the electrical connector housing for evidence of damage which may affect the security of a terminal inside the connector housing, the operation of the anti-backout device and the secure fitment of the connector housing to the intended component/connector housing. Replace any damaged electrical connector housing.

The illustrations show examples of some of the common styles of extraction tools used on different types of electrical connector(s). Care should be exercised to avoid further damage when removing the terminals from the electrical connector.

NOTE:

Examples of the extraction tools and anti-backout devices.

A

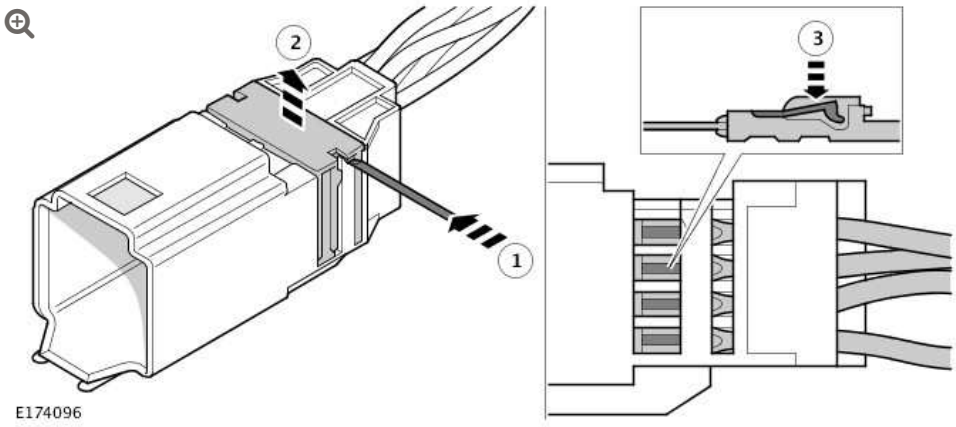

B

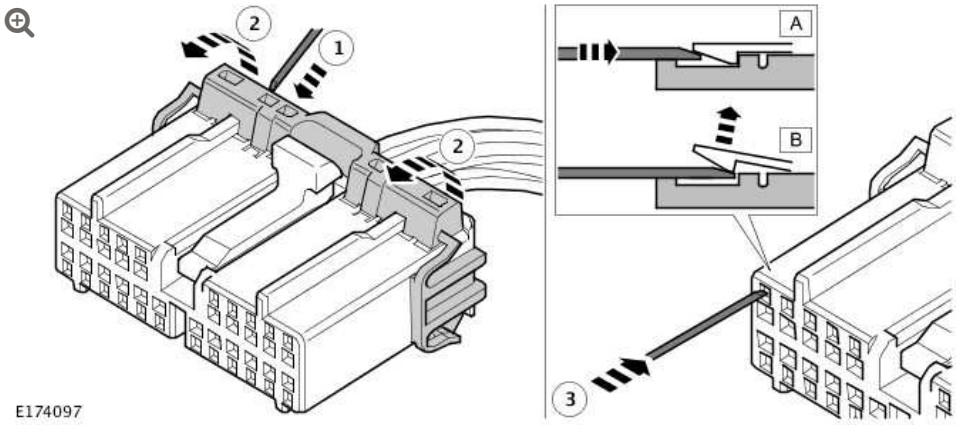

C

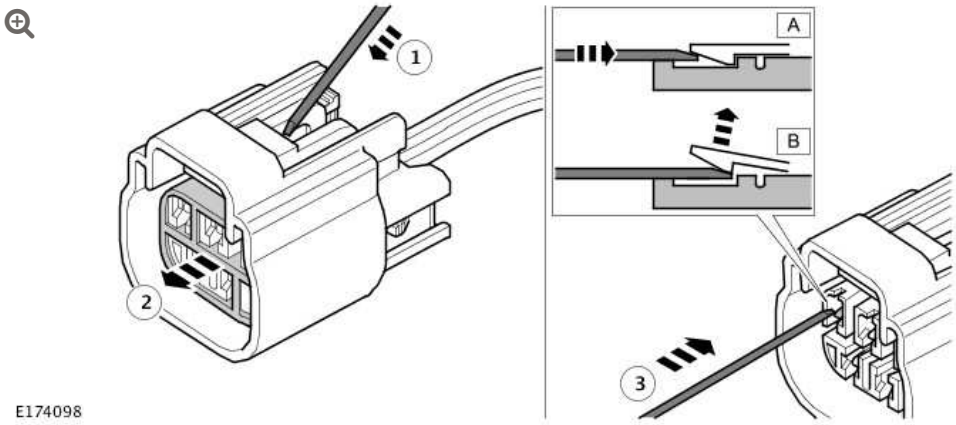

D - 1

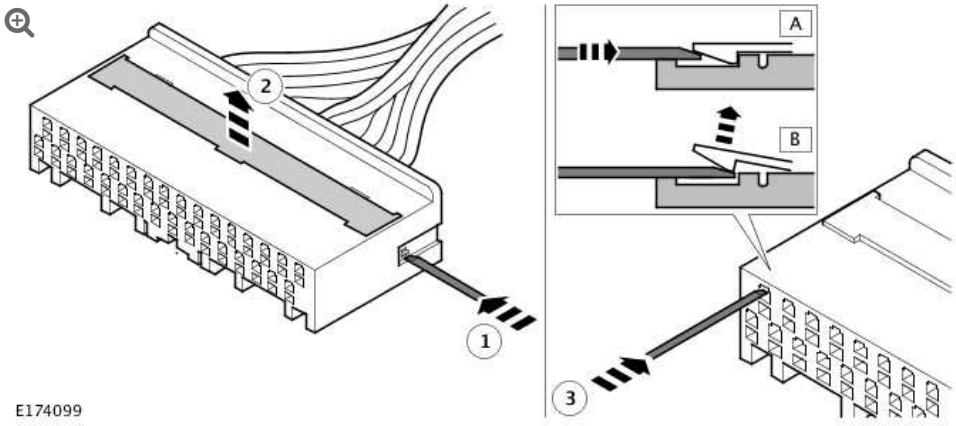

D - 2

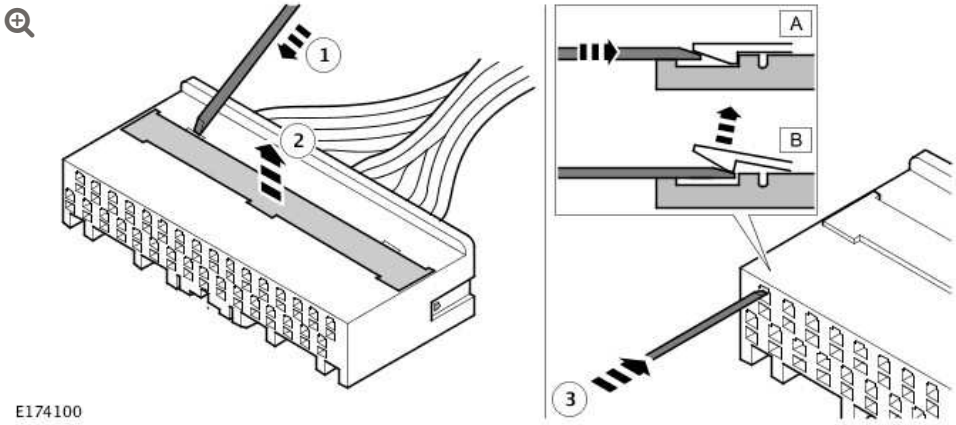

E174100

E

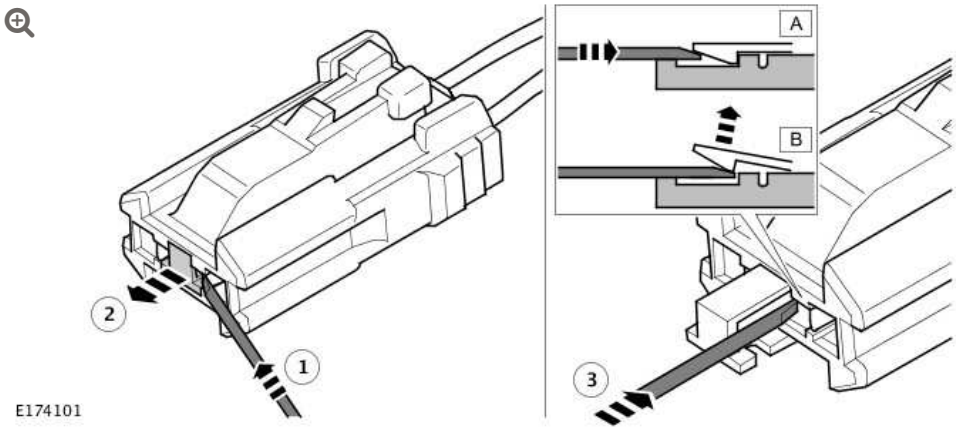

E174101

F

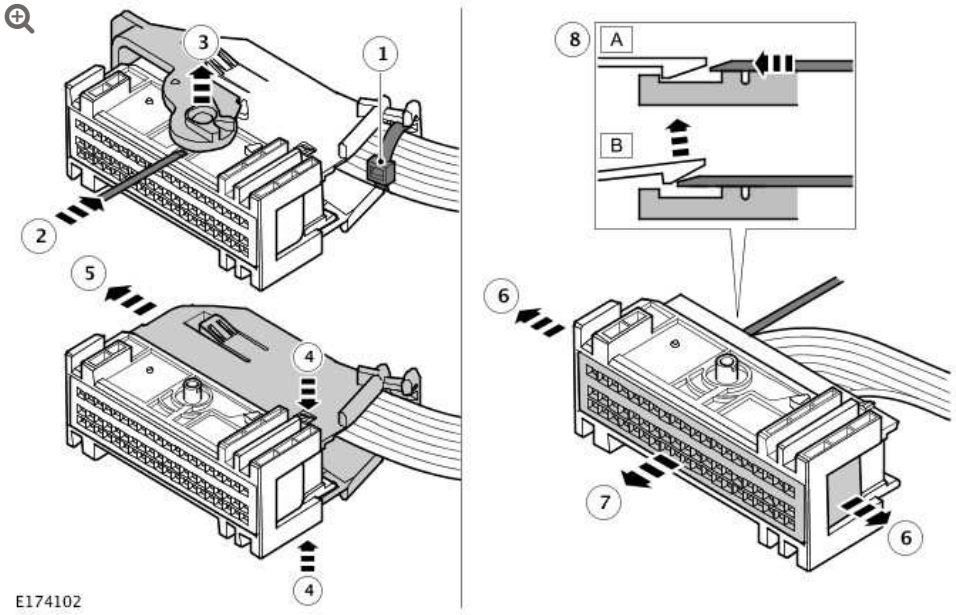

E174102

G

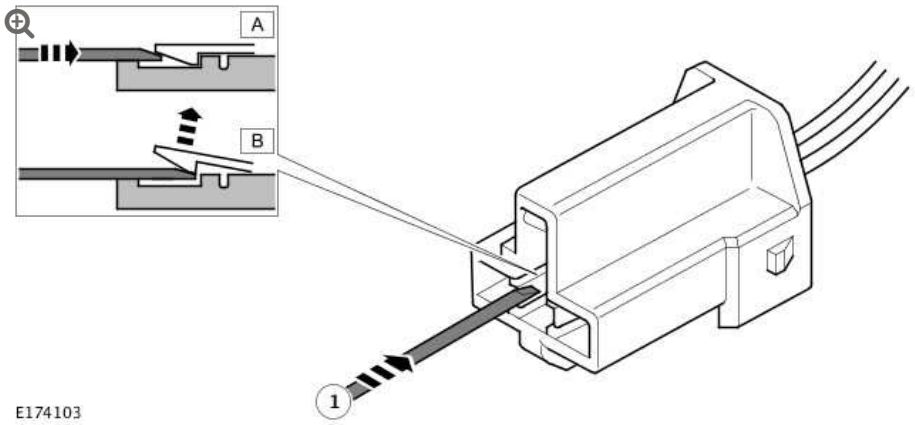

H

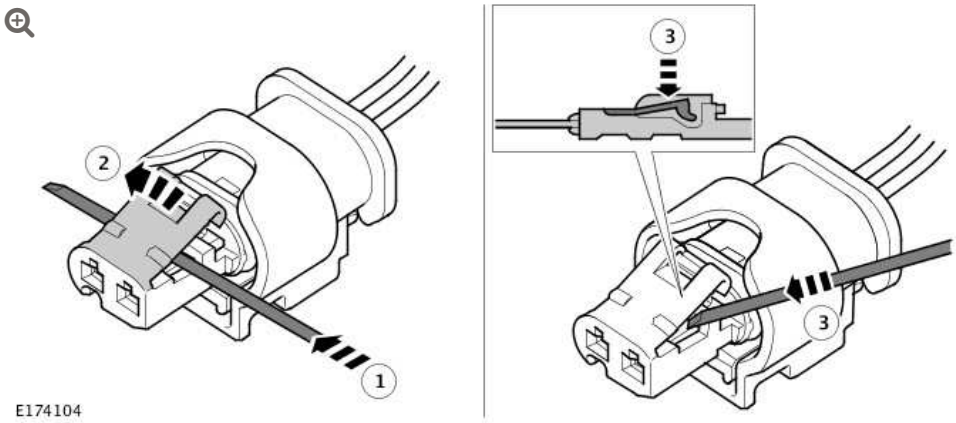

I

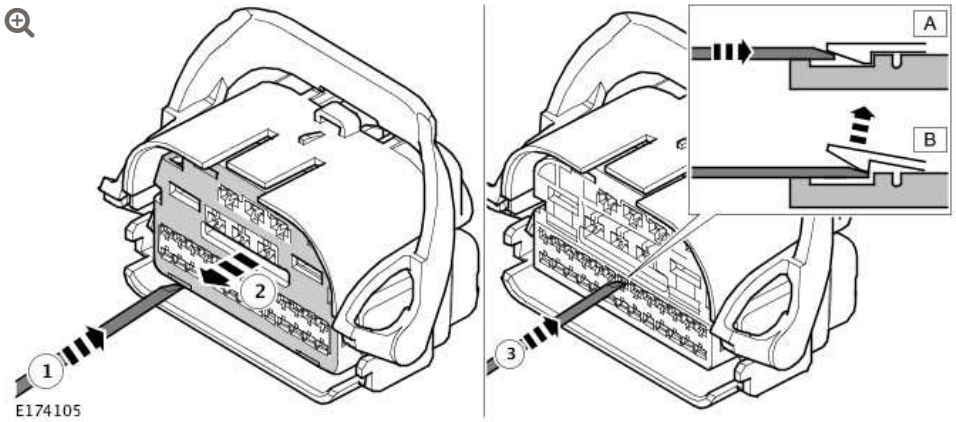

J

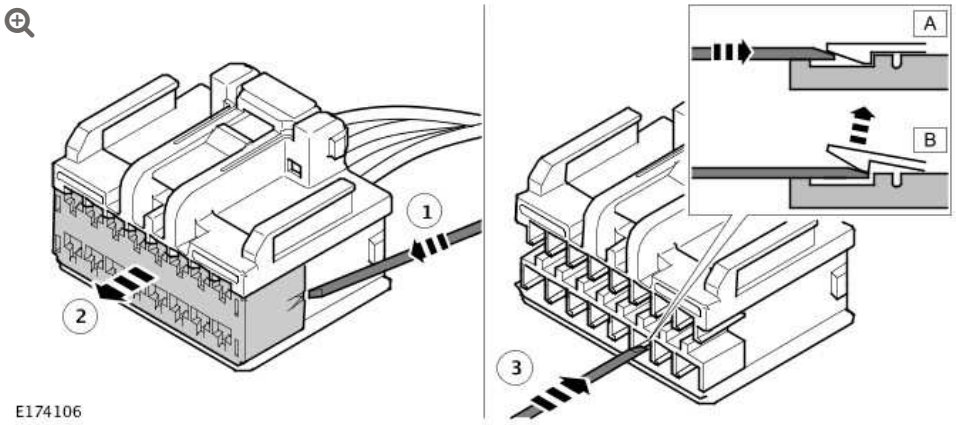

E174106

K

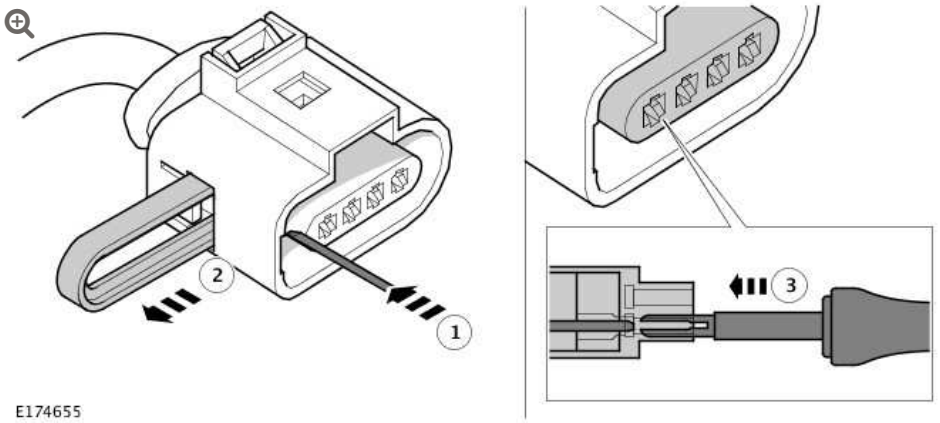

E174655

L

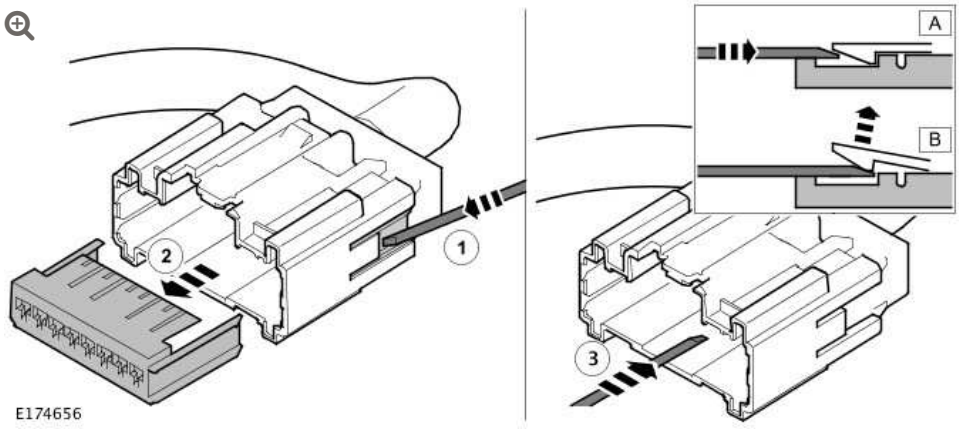

E174656

M

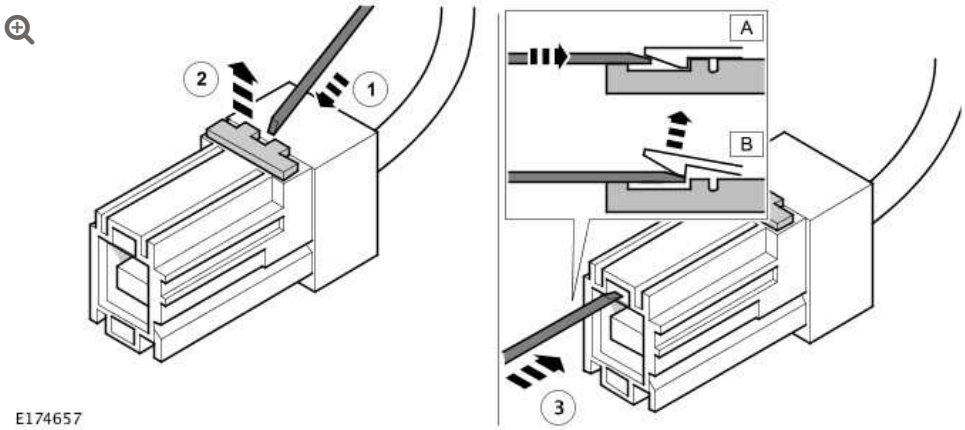

N

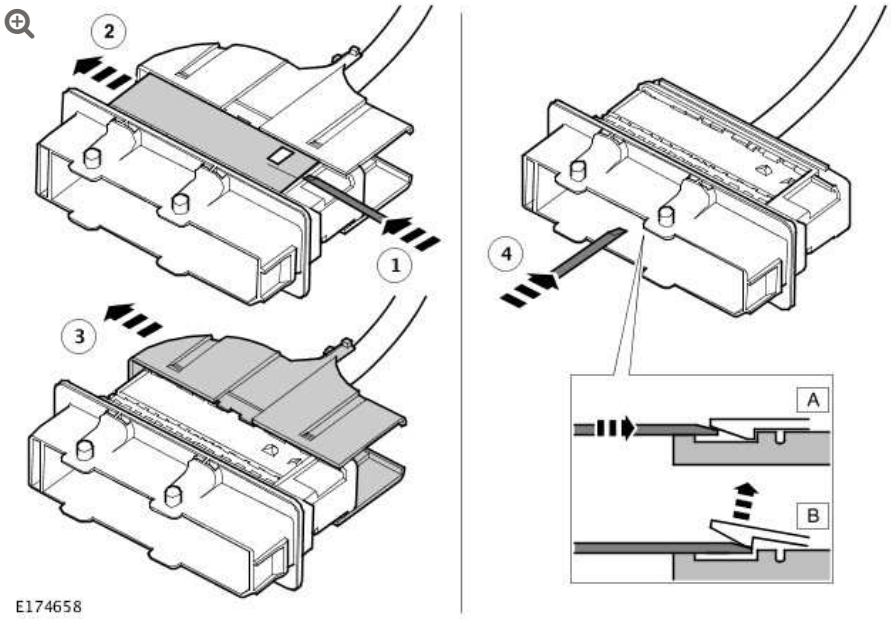

TYPES OF ELECTRICAL WIRING HARNESS SPLICE REPAIRS

Splice connectors are available in 3 sizes; refer to Pre-Terminated Lead and Splice Connectors in the Electrical Wiring Harness Repair Components section.

A splice connector can be used in a number of ways to achieve an effective and robust wiring harness repair.

NOTE:

> For all repairs the wire being repaired must not be under any strain when the circuit is connected to the intended component or connector housing etc. If the wire is too short once the damage has been removed, it must be returned to the appropriate length. This requires inserting an extension wire into the center of the splice repair; refer to Double Splice Extension Repair.

The following information will show and explain the variations of splice joints achievable; these are:

- One Wire Splice Repair
- Two Wire Splice Repair
- Pulled Out Wire Splice Repair
- Damaged Splice Repair
- Double Splice Extension Repair
- Splice Repair to Wire Smaller than 0.35mm²

One Wire Splice Repair

If a wire has damage isolated to the wire only without any further damage to the terminal or connecter, the damaged portion of wire can be removed by cutting each side of the damaged area and reconnected using the appropriate splice connector.

One Wire Splice Repair Example

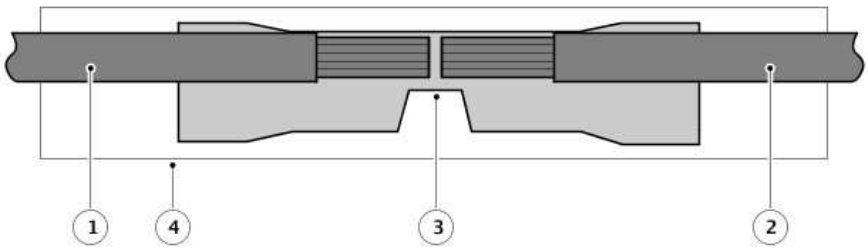

E177956

1 Original Wire

2 Original Wire

3 Splice Connector

4 Glue Lined Heat Shrink Sleeve

Two Wire Splice Repair

To repair wiring harnesses with damaged eyelets, use a splice connector with a suitable pre-terminated lead with the appropriate eyelet and wire size.

NOTES:

- If the damaged eyelet is from an interlocking pair, it is recommended to replace both eyelets.
- If any harness(s) with large multi wire ground eyelets give cause for concern, new components must be installed.

If the wiring harness has a damaged eyelet with two wires to the eyelet, it is recommended to use a suitable pre-terminated lead with a cross sectional area equal to or greater than that of the 2 wires combined to complete the repair.

Two Wire Splice Repair Example

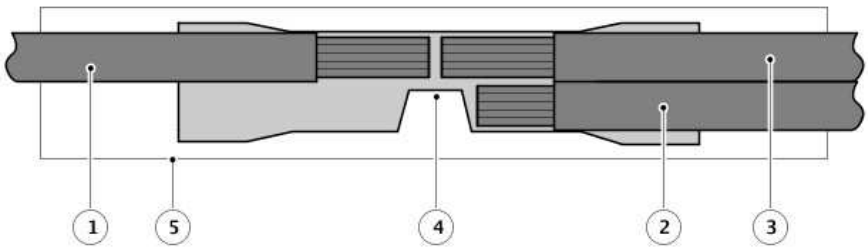

E177957

1 Pre-terminated Lead

2 Original Wire

3 Original Wire

4 Splice Connector

5 Glue Lined Heat Shrink Sleeve

Pulled Out Wire Splice Repair

If a wire has become disconnected from its splice, it can be repaired by splicing the disconnected wire to one of the wires still part of the original splice.

Cut the undamaged wire of the original splice and with a suitable splice connector, clamp the splice side of the wire. Fit a suitable section of glue lined heat shrink sleeve to the splice the wire had disconnected from. Insert the disconnected wire and the undamaged wire into the splice connector and clamp the splice connector.

Pulled Out Wire Splice Repair Example

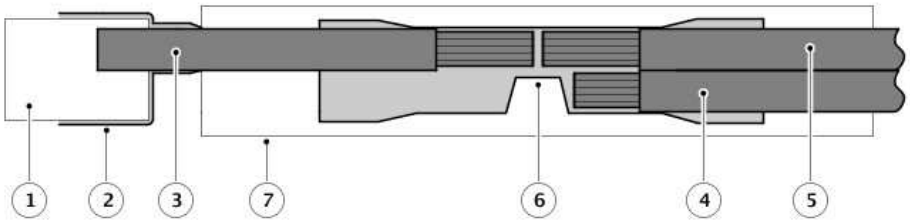

E177958

1 Original Splice

2 Glue Lined Heat Shrink Sleeve

3 Original Undamaged Wire

4 Pulled Out Wire

5 Original Undamaged Wire

6 Splice Connector

7 Glue Lined Heat Shrink Sleeve

Damaged Splice Repair

If a wiring harness has splice which has been damaged, the splice must be removed and replaced.

Remove the damaged splice by cutting it from the wiring harness, making sure to leave as much undamaged wire as possible on the wiring harness. Using one or more suitable splice connectors make a new splice.

Damaged Splice Repair Example

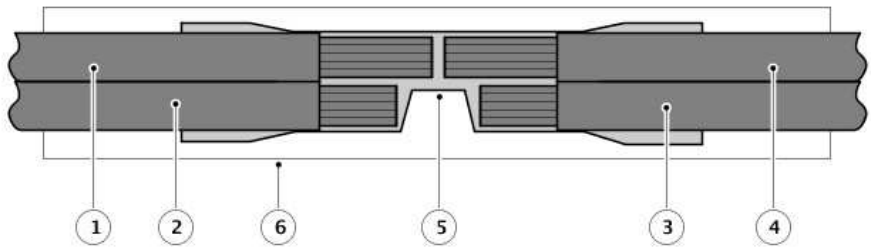

E177959

1 Original Wire

2 Original Wire

3 Original Wire

4 Original Wire

5 Splice Connector

6 Glue Lined Heat Shrink Sleeve

Double Splice Extension Repair

If the wire(s) being repaired are too short once the damage area of wire has been removed, it is recommended to use 2 splice connectors and an appropriate length of wire with colored cable identification sleeves to return the wire its original length.

The extension wire must have the same or greater cross sectional area as the wire(s) combinations entering the splice connectors. Example: 2 wires x 0.5mm² cross sectional area + 2 wires x 0.75mm² cross sectional area would require a wire of 2.5mm² cross sectional area or greater.

Double Splice Extension Repair Example

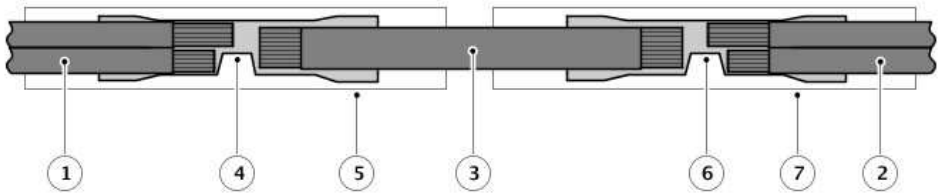

E177960

1 Original Wire(s)

2 Original Wire(s)

3 Extension Wire

4 Splice Connector

5 Glue Lined Heat Shrink Sleeve

6 Splice Connector

7 Glue Lined Heat Shrink Sleeve

Splice Repair to Wire Smaller than 0.35mm²

To repair a damaged wire with a cross sectional area smaller than 0.35mm², it is recommended to use the smallest approved splice connector (red) and insert an additional wire with the wire being repaired into each side of the slice connector.

For each splice repair to a wire smaller than 0.35mm², an additional piece of wire (0.35mm² or 0.5mm²) must be inserted into the splice connector with the wire being repaired to make the joint secure when crimped. When the wires have been crimped into the splice connector, all additional wire(s) must be cut close to the splice connector to make sure the additional wire is fully covered when the glue lined heat shrink sleeve is fitted into position over the splice connector.

Splice Repair to Wire Smaller than 0.35mm² Example

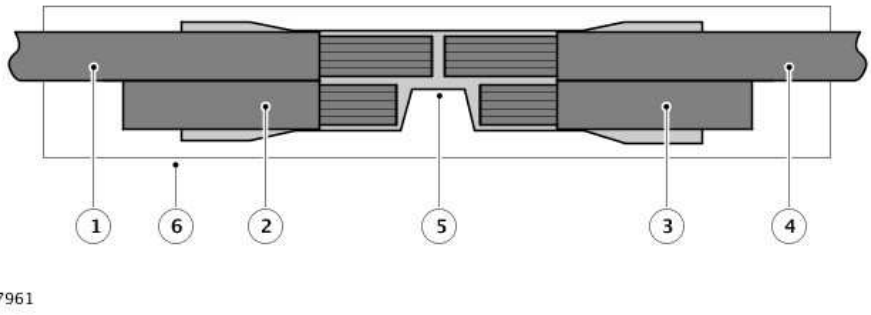

1 Original Wire (less than 0.35mm²)

2 Additional wire (0.35mm² or 0.5mm²)

3 Pre-terminated Lead or replacement wire (less than 0.35mm²)

4 Additional wire (0.35mm² or 0.5mm²)

5 Splice Connector

6 Glue Lined Heat Shrink Sleeve

Repairs to Twisted Wires

The number of twists or turns of twisted pair wires is important to the functionality of the vehicle systems and as such must be maintained during a repair.

It is important to make sure that the number of turns over the repair length is counted at the start of the repair and the same number of turns reintroduced before fitting the terminals into the connector. If the original number of turns cannot be reintroduced on a Controller Area Network (CAN), the maximum length of 150mm of untwisted wire must not be exceeded.

WIRING HARNESS REPAIR PROCEDURE

Before starting any repair of a damaged wire, the damaged wire must be inspected along its length where possible to evaluate the

full extent of the damage. If the damage is in a localized area the wire repair is recommended, if the damage is extensive, a replacement harness should be considered. A wire being repaired must be cut at a point where there is no damage to the wire or insulation.

NOTES:

- If the wire repair requires the use of a pre-terminated lead, the wire must not be cut more than 300mm from a connector housing.
- A repaired wire must not be under any strain when connected to its intended component/connector housing.

Where there is a need to repair more than one wire in a harness branch, the splices must be staggered to minimize the effect of increasing the diameter of the harness branch. The recommended spacing is 50mm between centers for yellow splices and 40mm between centers for red or blue splices.

CAUTIONS:

- Do not use crimpers, insulation (wire) strippers, splice connectors, heat shrink sleeves or pre-terminated leads or wiring harness(s) that are not authorized and supplied via the Jaguar/Land Rover parts ordering system. Each part has been designed to be used only with the other parts available via the Jaguar/Land Rover parts ordering system.
- Where the repair procedure indicates that a glue lined heat shrink sleeve should be applied, apply sufficient heat to the glue lined heat shrink sleeve to melt the glue in order to provide a water tight seal. Do not over heat the glue lined heat shrink sleeve so that the wiring harness insulation becomes damaged.

There is no specific limit on the number of splices that can be used in a harness branch. The responsible technician must judge the number of splices that can be fitted along the available length of harness and within the space in which the harness is located.

Consideration must be given to any need to bend the harness and the risks of the repaired harness rubbing, squeaking or rattling against adjacent parts, body panels or trim.

Wiring Harness Repair Process

1 Remove the faulty terminal from the electrical connector using the correct extraction tool. Make sure that any anti-backout device is released before trying to remove the terminal.

2

CAUTION:

A number of electrical connector terminals are gold plated or gold flashed. When defective, they must be installed with a gold pre-terminated wiring harness(s). It is not always easy to identify the female as gold but the male pins are visually easier, therefore always check both male and female terminals to identify those which are gold. Under no circumstances are gold and tin terminals to be mixed as this will lead to early failure of the electrical contact.

NOTE:

Never use a harness lead with a smaller diameter than the original harness lead.

Select the correct size and type of pre-terminated wiring lead and splice connector; refer to Wire Chart and Service Repair Information.

3 Using the wire cutter on the insulation (wire) stripper, cut the pre-terminated wiring harness and the harness cable to the required length.

4

NOTE:

See illustration: Stripping Insulation

From the Electrical Wiring Harness Repair Relationship Table, find the correct length of insulation to be stripped from the pre-terminated lead and set the adjustable cable length stop to

the correct length. Place the pre-terminated lead in the insulation (wire) stripper and remove the insulation.

5 Put the cable identification sleeve(s) on to the wiring harness with the main cable color nearest to the terminal.

6 During this next step take care only to close the crimpers far enough to hold the splice connector firmly in position. Place the selected splice connector in the crimpers, matching the aperture and the splice connector colors. Make sure that the window indentation in the splice connector is resting over the guide bar on the lower jaw. Partially close the grip until the splice connector is securely held in the aperture. This will give support to the splice connector while the wiring harness(s) are inserted into it.

7

NOTE:

See illustration: Splice Correctly Located

Insert the pre-terminated lead into the splice connector and make sure that the wire is against the wire stop. Close the grip firmly, crimping the pre-terminated lead to the splice connector. When the handles have been completely closed the splice connector will be freed from the tool as the handles are released. If the handles have not been completely closed then the jaws will hold the splice connector and it cannot be removed from the tool.

8 Make sure that the wiring harness cable has been squarely cut and the correct length of insulation removed. If more than one splice is needed the splice connectors must be not be crimped to the wiring harness at the same distance from the connector. The splices must be staggered to prevent a bulk of splices in the same area of the wiring harness.

9

It is preferable to cover the splice joint with a glue lined heat shrink sleeve. This is desirable not essential, except where the electrical connector is a sealed electrical connector. Use the smaller diameter glue lined heat shrink sleeve for red and blue pre-terminated lead(s) and the large diameter glue lined heat shrink sleeve for the yellow pre-terminated lead(s). It is advisable to place the heat shrink sleeve over the completed joint but in some instances the glue lined heat shrink sleeve will not pass over the terminal. Check, and if required, place the correct size glue lined heat shrink sleeve onto the harness cable or pre-terminated lead before crimping the splice to the wiring harness.

10 Place the harness cable into the splice with the splice window over the guide bar. Make sure that the harness cable is against the stop in the splice, crimp the splice connector to the wiring harness.

11 Gently pull the harness cables each side of the splice connector to make sure that a secure joint has been made.

12

WARNING:

Do not use a naked flame in areas where fuel or oil have been spilt. Clean the area of residual oil and fuel and wait until the fuel spill has fully evaporated.

CAUTIONS:

- When using a heat source make sure that it is localized and causes no damage to surrounding materials.
- Where the repair procedure indicates that a glue lined heat shrink sleeve should be applied, apply sufficient heat to the glue lined heat shrink sleeve to melt the glue in order to provide a water tight seal. Do not over heat the glue lined heat shrink sleeve so that the wiring harness insulation becomes damaged.

Using a suitable heat source, shrink the sleeve over the splice.

13 If further pre-terminated lead(s) are to be installed to the same electrical connector, make sure that the lead is cut at a different length to the previous joint. This makes sure that the splices will, where possible, be staggered on the wiring harness and prevent a bulk of splices in one area.

14 When all of the splices have been made, fit the terminal(s) to the electrical connector, taking care that the terminals are correctly orientated.

15 Install the wiring harness cover and secure with adhesive electrical tape. Do not cover the wiring harness right to the electrical connector as the terminals must have a little movement and not be firmly bound to the electrical connector or wiring harness. Make sure that the cable identification sleeve (s) are showing at the wiring harness electrical connector.

Stripping Insulation

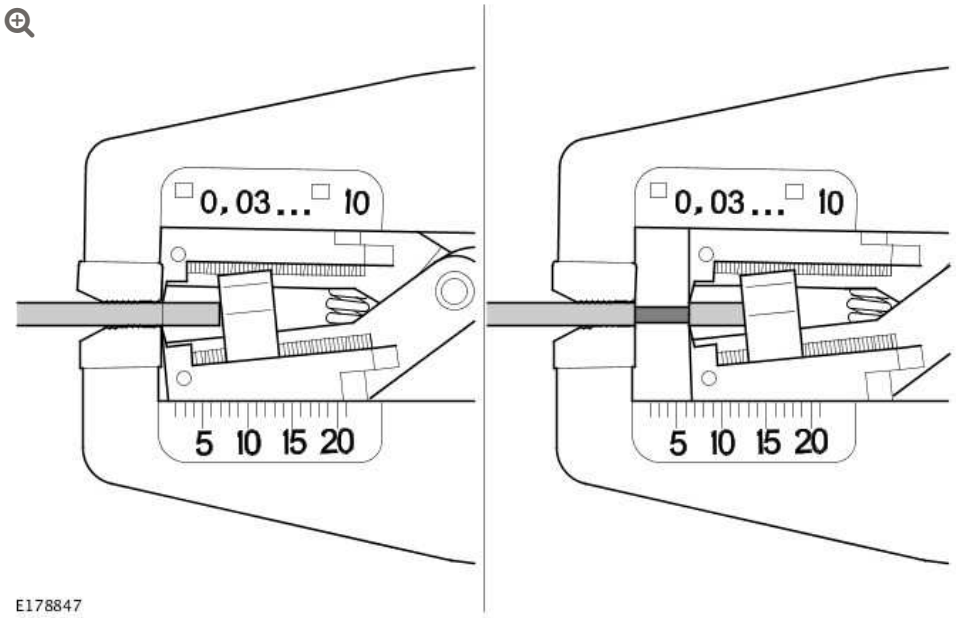

Splice Correctly Located

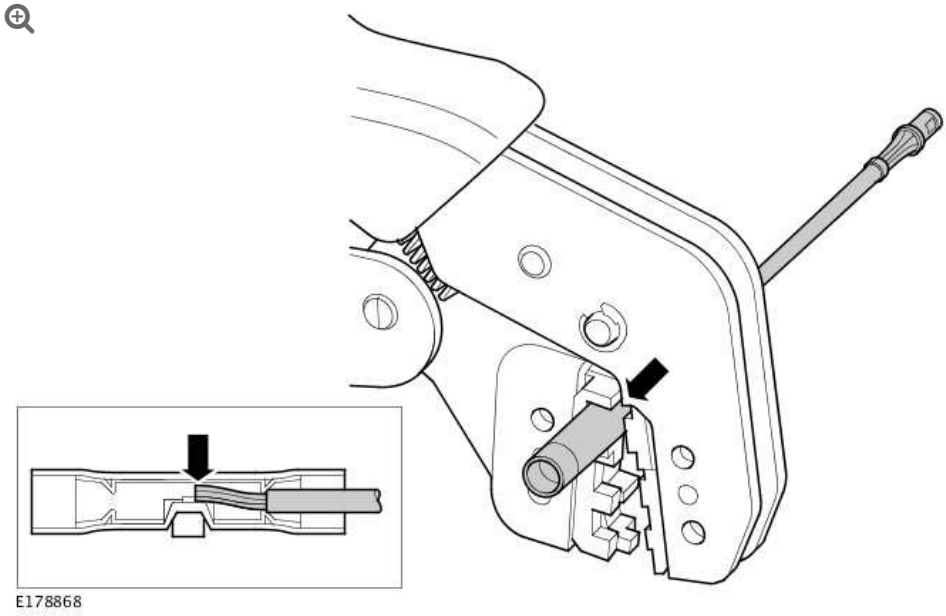

MOST NETWORK HARNESS REPAIR

If a fibre optic cable is damaged, it must not be repaired and must be replaced with a new cable.

Replacement fibre optic cables can only be made using the approved repair equipment and components.

The approved repair kit contains the specially designed fiber optic conductor strippers, which are used to prepare 2.3mm fiber optic cable for the fitment of the brass fiber optic conductor contact. The fiber optic conductor contact crimping pliers must then used be used to crimp the brass contact to the fiber optic conductor core. The approved crimping pliers supply the appropriate pressure to the brass contact to make a secure contact, but not damage the conductor core.

The cut face of the fiber optic core must be protected from damage and contamination at all times.

CAUTION:

Fiber optic cables have a maximum bending radius 25mm and must not be kinked or excessively bent.

The performance of fibre optic cables is very dependant upon the quality of the cut surface at connections and to the bending radius of the cables.

MOST HARNESS REPAIR COMPONENTS AND TOOLS

List of Parts

NOTE:

Repair components can be ordered via the Jaguar/Land Rover parts ordering system.

DESCRIPTION	PART NUMBER	QUANTITY

DESCRIPTION	PART NUMBER	QUANTITY
Fiber Optic Conductor Lead	418-676	1
Fiber Optic Conductor Contact	418-677	20
Fiber Optic Conductor Contact Protective Cap	418-678	20
Fiber Optic Conductor Lead Connector - Inner	418-679	10
Fiber Optic Conductor Lead Connector - Outer	418-680	10
MOST Module Protective Cap	418-681	20
Fiber Optic Conductor Lead Connector Protective Cap	418-682	20

Fiber Optic Conductor Stripper

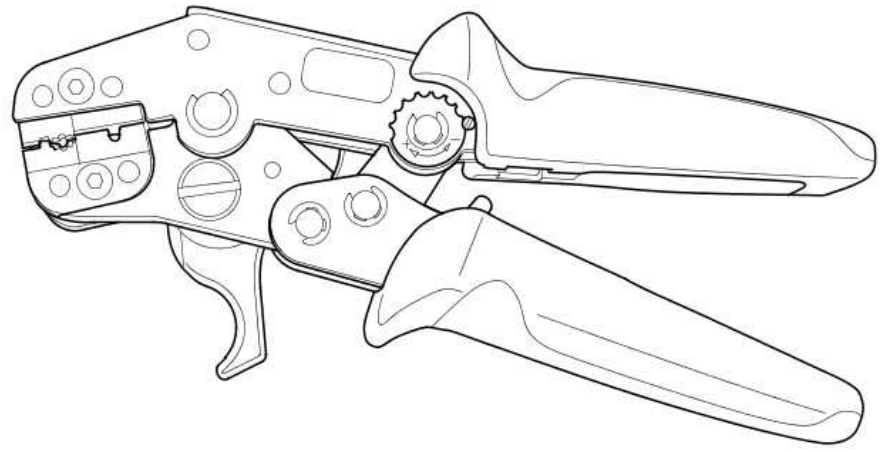

E176559

Fiber Optic Conductor Stripper Jaw Positions

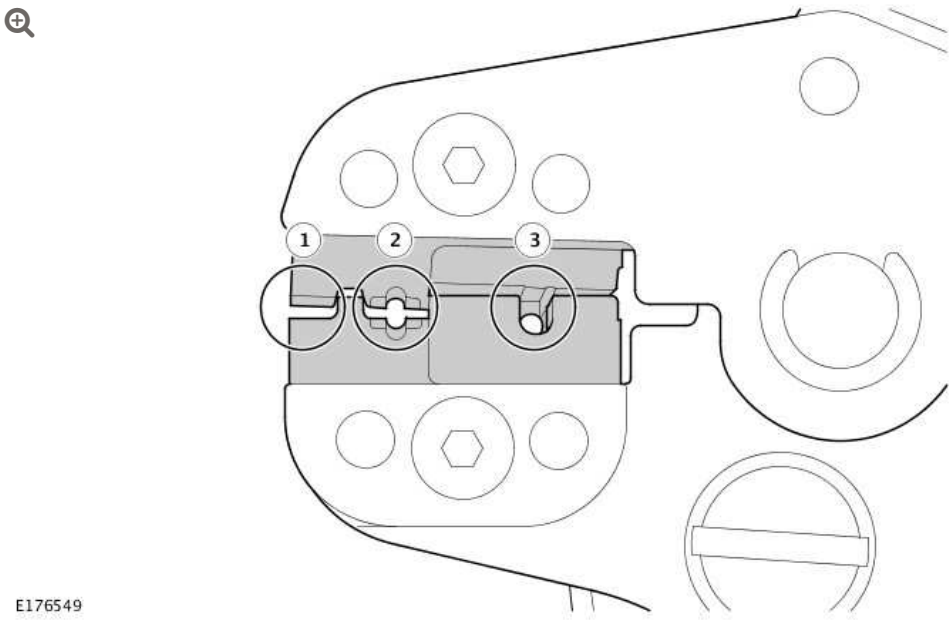

1	Fiber Optic Cable Cutter
2	Fiber Optic Cable Insulation Stripper
3	Fiber Optic Core Cutter

Fiber Optic Core Cutter Locking Screw

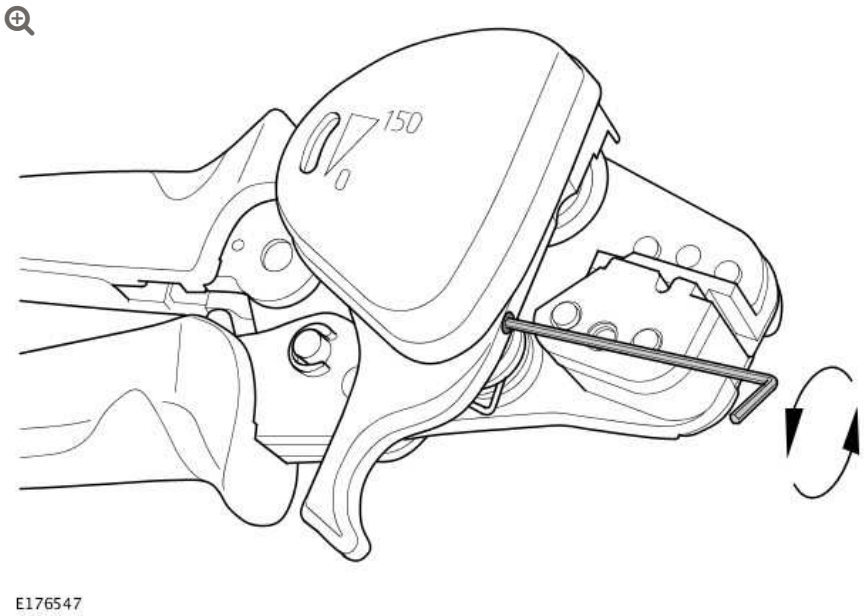

The fiber optic core cutter has a locking screw to protect the cutter wheel when in transit or not in use. A hexagonal key is supplied in the MOST repair kit to release the locking screw.

NOTE:

Tighten the transportation locking screw after use.

Fiber Optic Core Cutter Remaining Cut Indicator

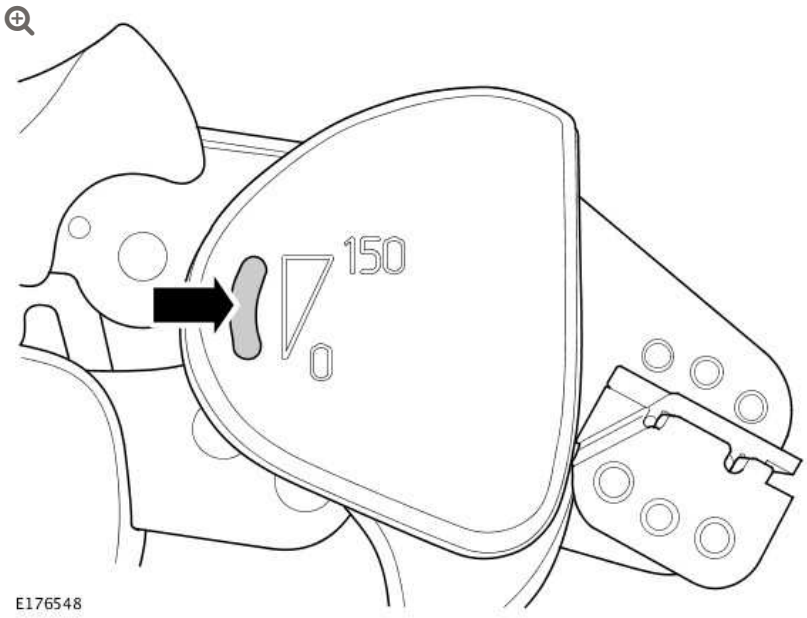

The fiber optic core cutter can be used for approximately 1260 cuts. The indicator line on the remaining cut indicator window only becomes visible when the fiber optic core cutter has 150 cuts or below available.

NOTE:

When the fiber optic core cutter has reached the maximum allowed cuts, the cutter will become locked and the fiber optic conductor stripper must then be renewed.

Before using the fiber optic conductor core cutter, make sure it has enough cuts remaining to complete the repair process by viewing the remaining cut indicator.

Fiber Optic Conductor Contact Crimping Pliers

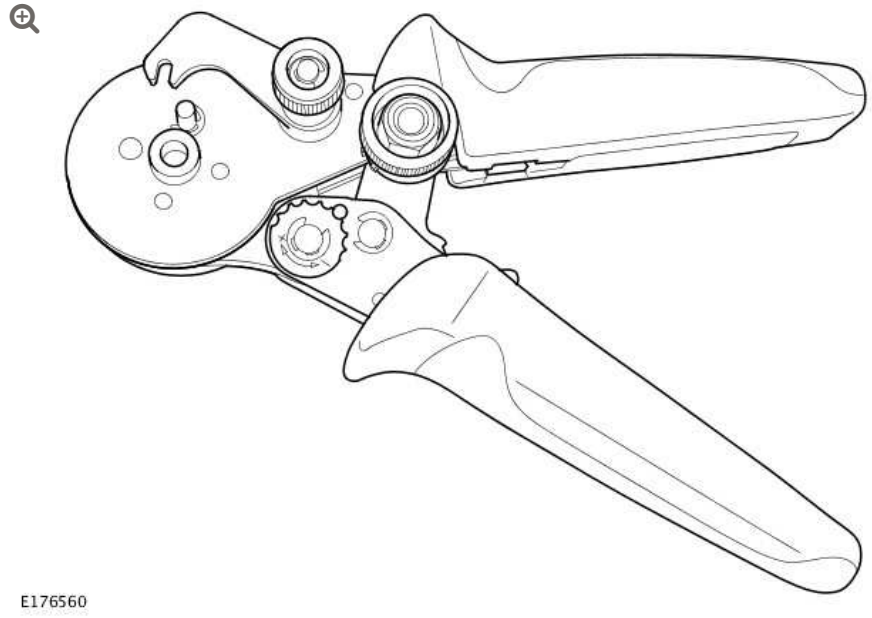

A small amount of effort is required to operate the fiber optic conductor contact crimping pliers and secure a fiber optic conductor contact to the fiber optic conductor core.

The new fiber optic conductor contact is placed into the cramping mechanism in the head of the pliers and the locking arm is repositioned to hold the conductor contact securely in position. The locking arm must locate on to the retaining pin.

The prepared end of the fiber optic core is then inserted into the new conductor contact.

The fiber optic core and conductor contact must be pushed and held against the spring pressure in the cramping mechanism. The grips of the fiber optic conductor contact crimping pliers are then be closed, cramping the conductor contact to the conductor core.

NOTES:

- Only use the approved fiber optic conductor contact crimping pliers to cramp a new conductor contact.
- A conductor contact must only be cramped once using the fiber optic conductor contact crimping pliers.

The cramping mechanism inside the head applies the appropriate pressure to the conductor contact at 4 points. This makes a secure contact and does not damage the conductor core.

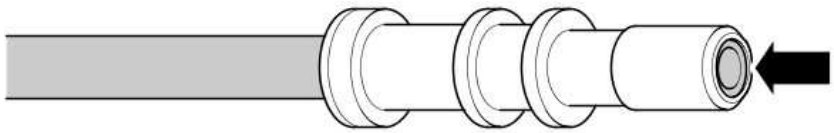

E176556

When the new conductor contact has been cramped to the fiber optic core, make sure the fiber optic core end sits 0.01mm to 0.1mm below the height of the conductor contact end.

NOTE:

Make sure the fiber optic conductor lead contact remains clean and protected at all times. Fit a fiber optic conductor contact protective cap.

MOST Repair Tools

NOTE:

Replacement repair equipment can be ordered from the equipment workshop website; refer to the Replacement Repair Equipment in the Introduction section.

DESCRIPTION	PART NUMBER	QUANTITY
MOST Repair Kit	418-673	1
Fiber Optic Conductor Stripper	418-674	1
Fiber Optic Conductor Contact Crimping Pliers	418-675	1
Fiber Optic Conductor Lead Installation Pliers	418-683	2

MOST HARNESS REPAIR PROCEDURE

The MOST connector(s) have an anti-backout device which prevents the contact from being released from the connector. The anti-backout device must be released before attempting to remove the terminal from the connector. The anti-backout devices require a special tip to release the device. Please refer to the ERL for the correct tool(s) to use.

The illustration shows an example of a common style of extraction tool being used on a MOST connector(s). Care should be exercised to avoid further damage when removing the terminals from the connector.

CAUTIONS:

- Before releasing the fiber optic cable from the connector housing, mark the IN/OUT assignment of the fiber optic cable.
- To prevent contamination or mechanical damage to the exposed end face of a fiber optic cable, make sure all disconnected MOST connectors and fiber optic cables are fitted with a protective cap.

MOST Connector Terminal Extraction

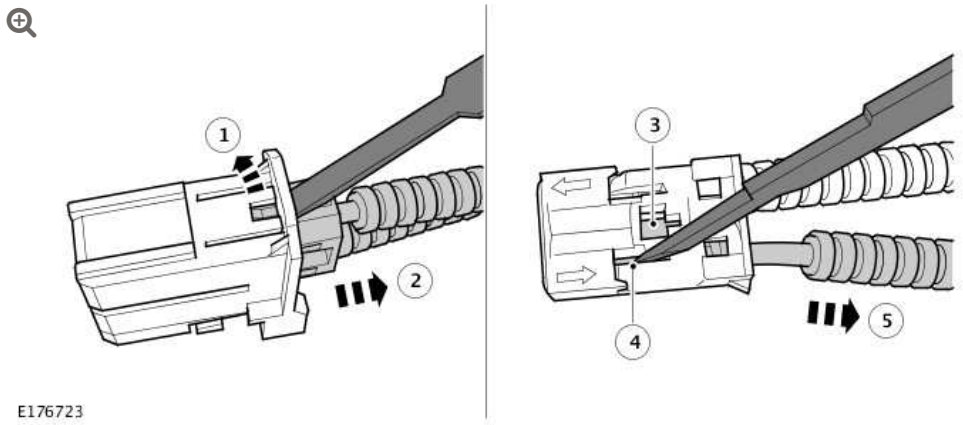

MOST Harness Repair Process

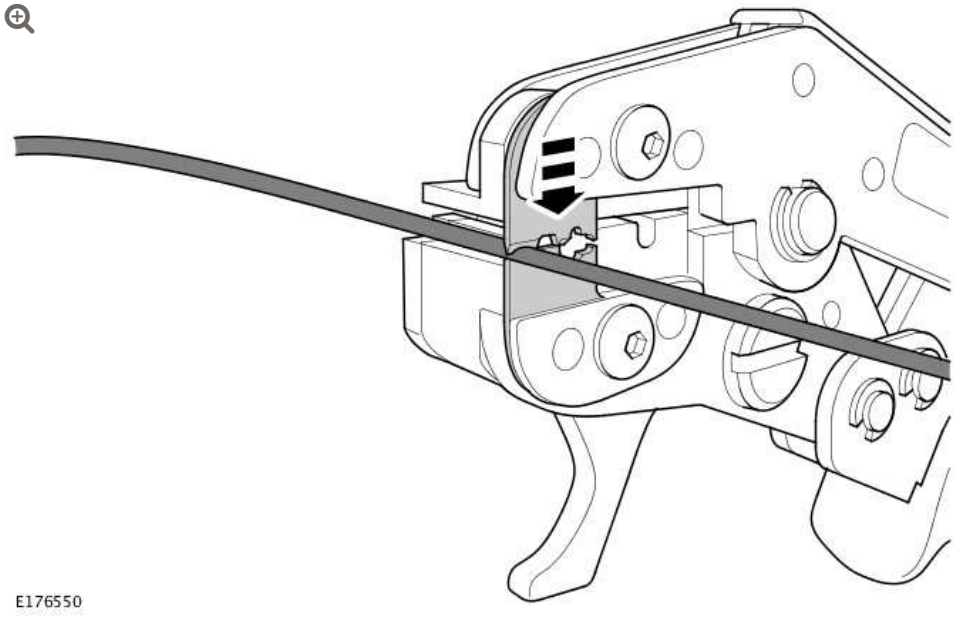

1. Confirm the length of fiber optic conductor lead required to create a new fiber optic cable. Cut the fiber optic conductor lead to the required length using the fiber optic cable cutter.

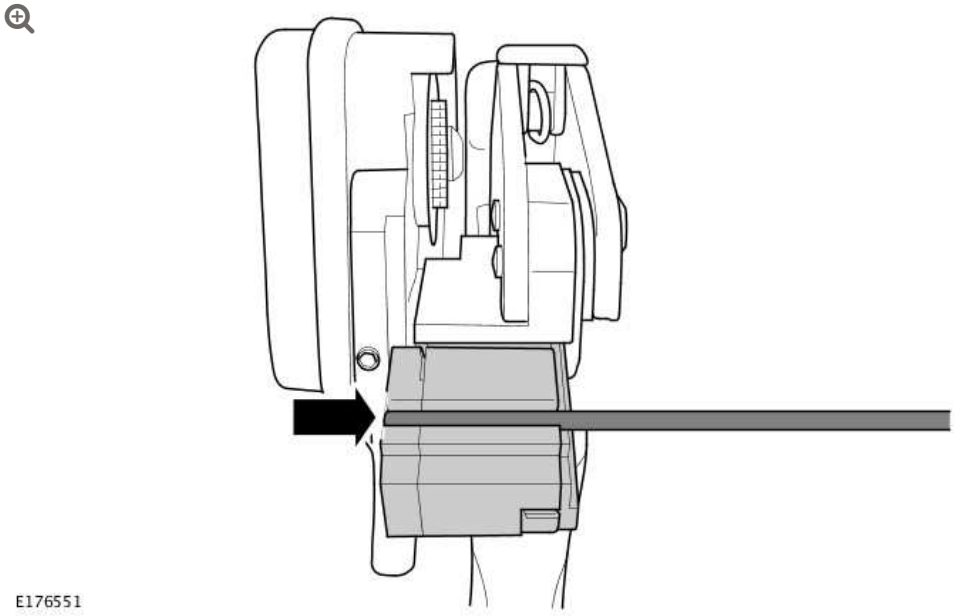

2. Open the fiber optic conductor stripper jaws and insert the fiber optic conductor lead up to the edge of the jaws.

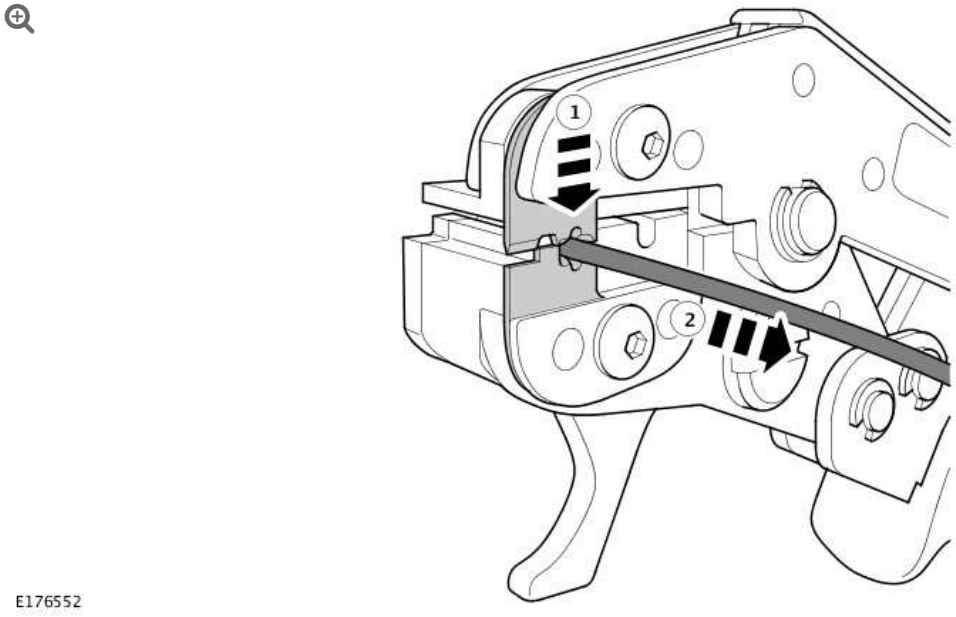

3. Close the fiber optic conductor stripper jaws (1) and carefully pull the fiber optic conductor lead (2) to remove the protective casing.

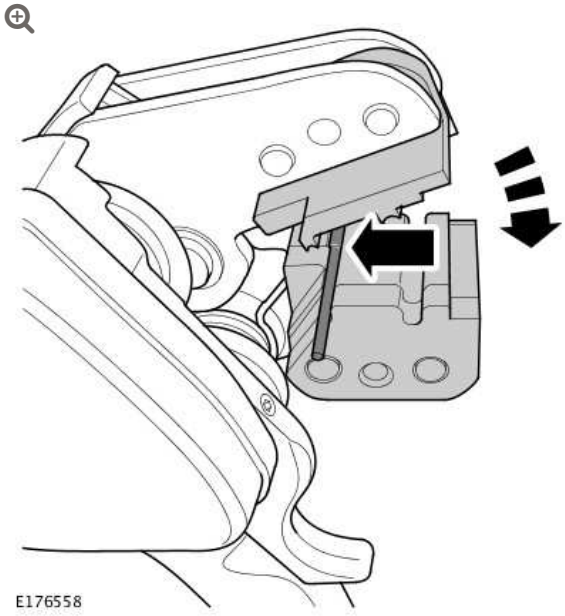

NOTE:

Make sure the protective casing of the fiber optic conductor lead sits against the fiber optic conductor cutter jaw stop.

4. Open the fiber optic conductor stripper jaws and insert the fiber optic conductor lead fully into the fiber optic conductor cutter slot. Close the fiber optic conductor stripper jaws.

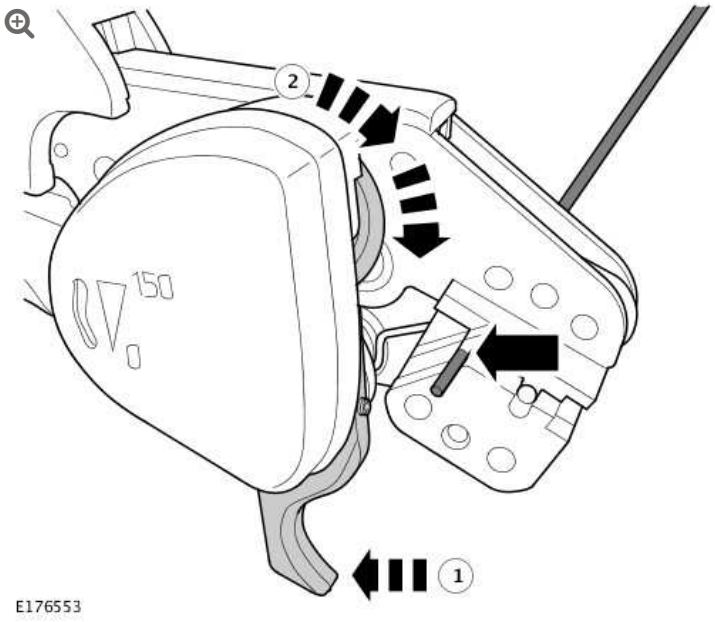

5. Pull the fiber optic conductor core cutter lever (1) to move the cutting wheel (2) and cut the fiber optic conductor core.

NOTE:

The end of the fibre optic core has now been prepared for the fitting of a brass contact.

6. Open the fiber optic conductor stripper jaws and remove the fiber optic conductor lead.

NOTE:

Make sure the fiber optic conductor core end remains clean at all times.

7.

Place fiber optic conductor stripper and fiber optic conductor lead to one side.

8. Open the fiber optic conductor contact pliers and reposition the conductor contact locking arm to the open position.

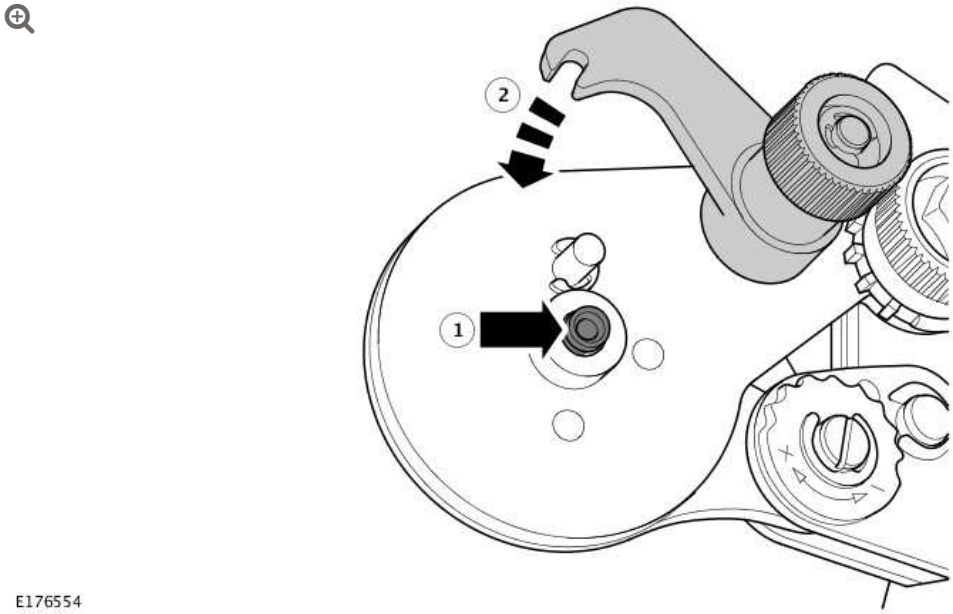

NOTE:

Make sure the locking arm locates on the retaining pin when in the closed position.

9. Insert a onductor contact (1) into the fiber optic conductor contact crimping jaws and reposition the conductor contact locking arm to the closed position (2).

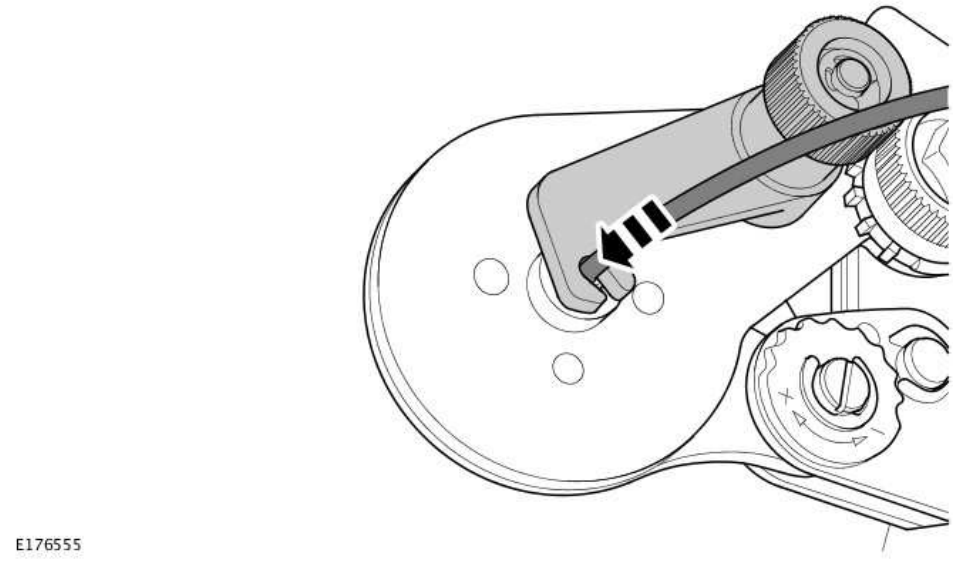

10. Insert the prepared end of the fiber optic conductor lead into the conductor contact.

CAUTION:

Make sure the fiber optic conductor lead is pushed in and held against the spring loaded stop when closing the fiber optic conductor contact pliers. This sets the core to the correct depth in the brass connector. Failure to follow this instruction may result in the fiber optic conductor cable malfunctioning.

11. Push the fiber optic conductor lead fully into the conductor contact and close the fiber optic conductor contact pliers.

12. Open the fiber optic conductor contact pliers and reposition the conductor contact locking arm to the open position.

13. Remove the fiber optic conductor cable from fiber optic conductor contact pliers.

14. Place fiber optic conductor contact pliers to one side.

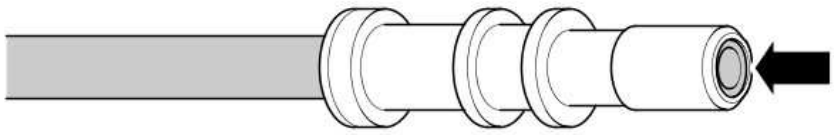

E176556

CAUTION:

Make sure the conductor contact has been correctly fitted to the fiber optic conductor core. Failure to follow this instruction may result in the fiber optic cable malfunctioning.

NOTES:

- The fiber optic core end must sit 0.01mm to 0.1mm below the height of the conductor contact end.
- Make sure the fiber optic conductor contact remains clean at all times.

15. Visually inspect the conductor contact for correct fitment to the fibre optic core.
   - Make sure the conductor contact has been visibly crimped at 4 points.
   - Pull the conductor contact by hand to make sure it is secure.

- Make sure the end of the fiber optic core sits below the height of the new conductor contact end.
- Fit a fiber optic conductor contact protective cap.

16. Repeat steps 2 to 15 and fit a conductor contact to the opposite end of the fiber optic conductor cable.

17. Measure between the conductor contact ends of the new fibre optic cable. Using a suitable tool cut a length of new protective corrugated tubing to the required length.

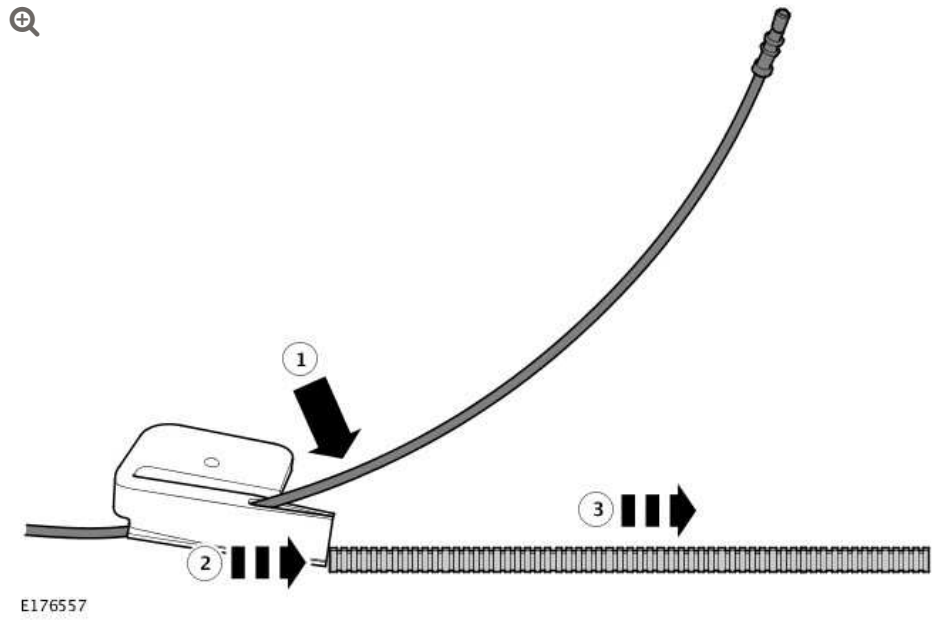

18. Install the fibre optic cable into the corrugated tubing.

1. Place the fibre optic cable inside the fiber optic conductor cable installation pliers.
2. Insert the fiber optic conductor cable installation pliers into the corrugated tubing.
3. Move the fiber optic conductor cable installation pliers down the length of corrugated tubing and install the fibre optic cable.

AIR SUSPENSION OVERLAY HARNESS INTRODUCTION

NOTES:

- This repair applies to L320 / LS, L405 / LG and L494 / LW models only.
- Some variation in the illustrations may occur, but the essential information is always correct.

If after diagnosis the height sensor requires replacement and the area of wiring damage is localized to the height sensor connector, this overlay harness should be used,

1. Disconnect the battery ground cable. For additional information, refer to Workshop manual section 414-00, Specifications - Battery Disconnect/Connect.

2. Disconnect the damaged height sensor electrical connector.

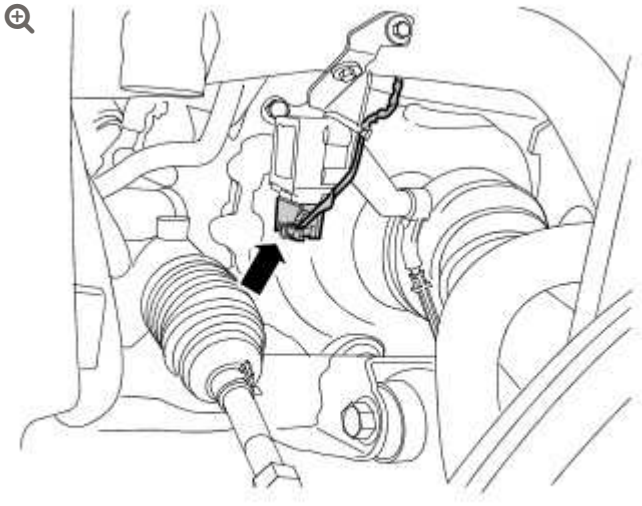

E78443

3. Unclip a sufficient length of the wiring harness to allow easy access during the repair.

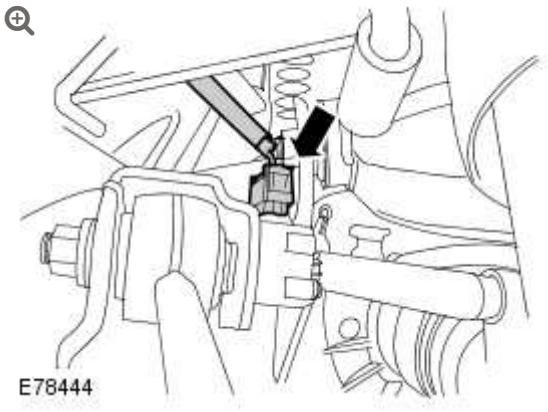

4. Remove the wiring harness insulation as required.

NOTES:

- It is advisable to cut only one of the wires at a time and to stagger each joint to allow easier insulation.
- The colours of the overlay harness may vary.

5. Cut the wire on the vehicle harness leading to cavity 1 of the height sensor connector in a suitable position and remove 10mm of insulation. For connector location and pin identification, refer to the relevant connector, L320 - C1696/7/8/9 and L405/L494 - C1CD10/11/12/13, in the Connector Details section of the relevant Electrical Library).

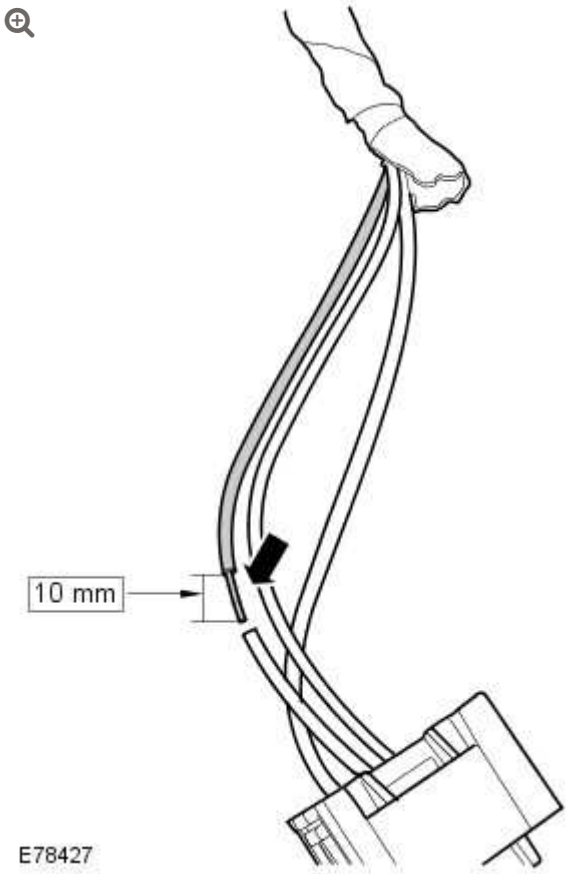

6. Slide over this wire a section of heat shrink sleeving.

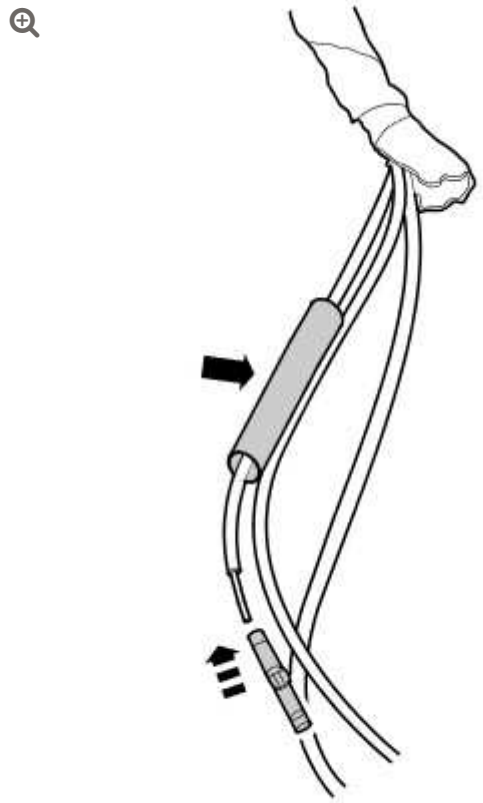

E78428

7. Using the inline connector supplied and the correct crimping tool set to the correct jaw size from the harness repair kit, crimp the connector to the wire.

NOTE:

The overlay harness should be cut so that there is no additional length added to the overall length after repair.

8. Select the appropriate wire on the overlay harness that also goes to cavity 1 of the new connector, cut to the correct length and remove 10mm of insulation.

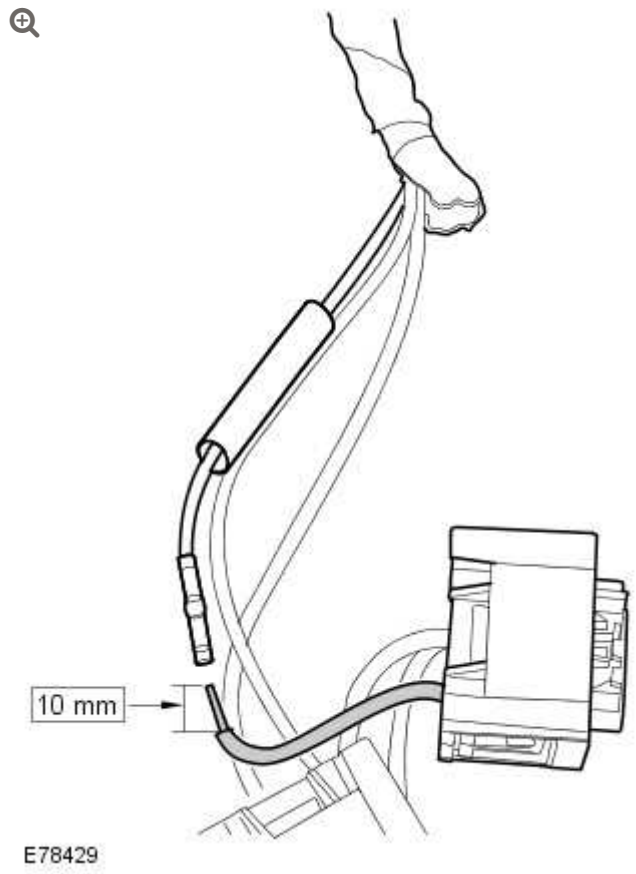

9. Insert the overlay wire into the connector and crimp in place.

CAUTION:

> Care must be taken when using the heat gun to avoid damage to surrounding areas.

10. Slide the heatshrink over the connector and using a hot air gun carefully apply the heat until the glue appears at both ends.

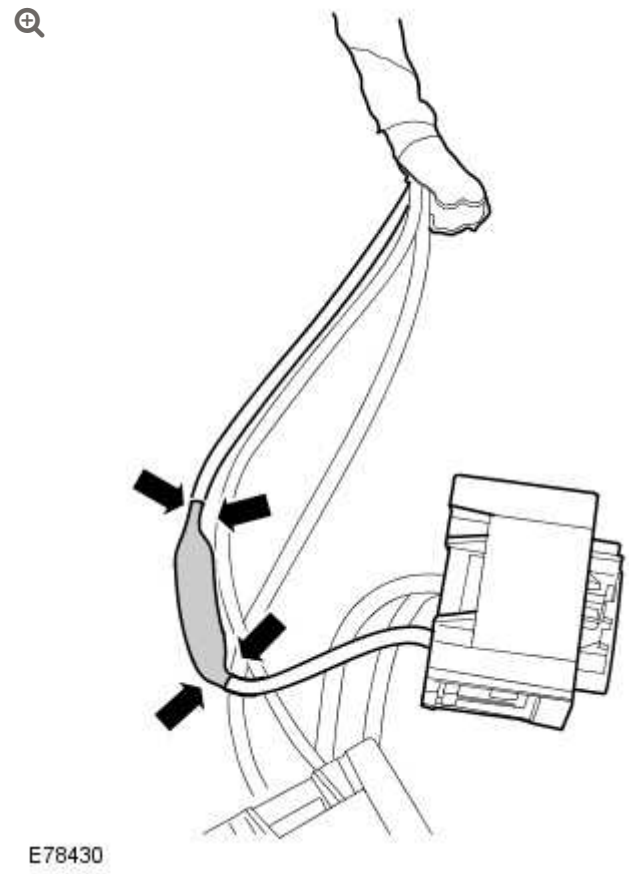

11. Carry out the same process for the wires in cavities 4 and 5 of the connector. For connector location and pin identification, refer to the relevant connector, L320 - C1696/7/8/9 and L405/L494 - C1CD10/11/12/13, in the Connector Details section of the relevant Electrical Library).

12. Discard the damaged connector/section of the harness.

13. Add suitable harness repair tape to the repaired area to within 10mm of the new connector to complete the repair.

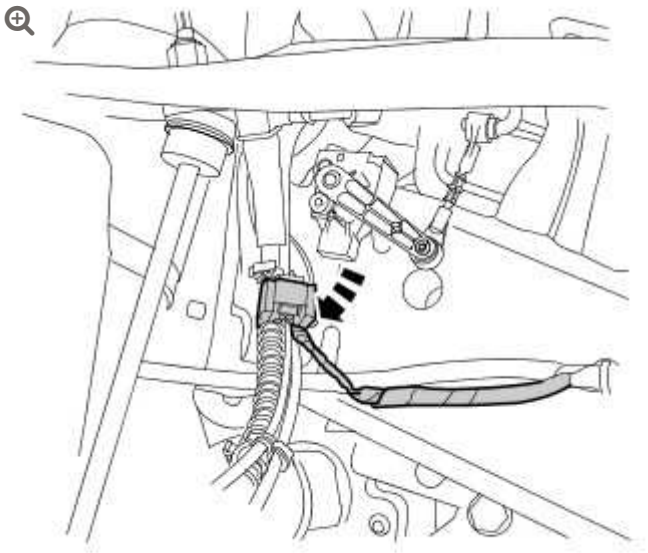

E78431

14. Correctly route/secure the harness and connect the new connector to the height sensor.

15. Connect the battery ground cable. For additional information, refer to Workshop manual section 414-00, Specifications - Battery Disconnect/Connect.

16. Clear any Diagnostic Trouble Codes logged in the air suspension control module using Land Rover approved diagnostic equipment and confirm correct operation of the system.

ANTI-THEFT - ACTIVE

SPECIFICATIONS

Torque Specifications

DESCRIPTION	NM	LB-FT
RH Hood latch Torx bolts	10	7
Security antenna	6	4

ANTI-THEFT - ACTIVE

DESCRIPTION AND OPERATION

COMPONENT LOCATIONS

NOTE:

right-hand drive (RHD) installation shown, left-hand drive (LHD) installation similar.

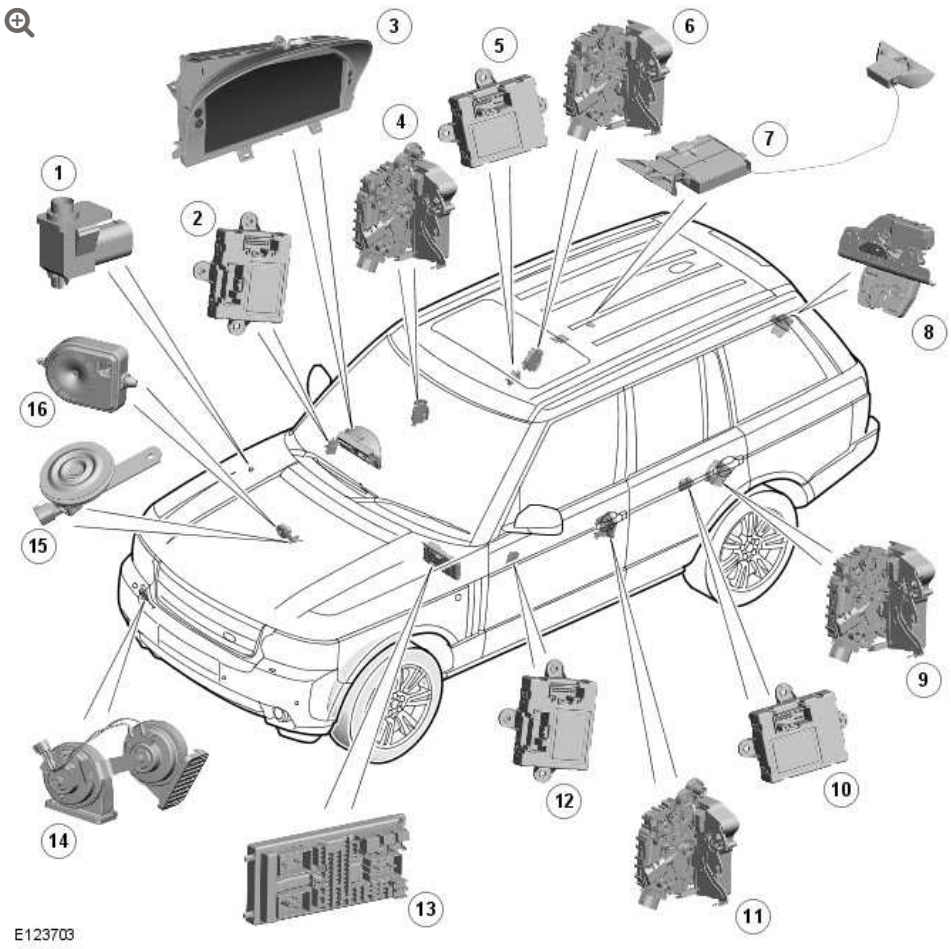

ITEM	DESCRIPTION
1	Hood ajar switch
2	Driver door module
3	Instrument cluster
4	Driver door latch
5	Rear door module
6	Rear door latch
7	Volumetric sensor
8	Upper tailgate latch
9	Rear door latch
10	Rear door module
11	Passenger door latch
12	Passenger door module

ITEM	DESCRIPTION
13	CJB (central junction box)
14	Horns
15	Passive sounder (if fitted)
16	BBUS/Tilt sensor (if fitted)

GENERAL

The active anti-theft system monitors the hinged panels for unauthorized opening. On some vehicles, the active anti-theft system also incorporates interior monitoring and vehicle tilt sensing functions. If an alarm event is detected, the active anti-theft system generates audible and visual alarm signals. The active anti-theft system is controlled by the CJB and is configured to automatically arm and disarm with operation of the CLS (central locking system). For additional information, refer to: Handles, Locks, Latches and Entry Systems (501-14, Description and Operation).

The active anti-theft system incorporates:

- An alarm indicator.
- A BBUS (if fitted).
- A volumetric sensor (if fitted).
- A tilt sensor (if fitted).

The active anti-theft system also uses:

- The CJB.
- The hood, door and tailgate ajar switches.
  For additional information, refer to: Handles, Locks, Latches and Entry Systems (501-14, Description and Operation).

ALARM INDICATOR

The alarm indicator is installed in the instrument cluster to provide a visual indication of the active anti-theft system status. Operation of the alarm indicator is controlled by a hardwired input from the CJB, which pulls the input to ground to illuminate the alarm indicator.

The alarm LED will begin to flash once every 2 seconds to indicate that the vehicle alarm is armed.

BBUS

The BBUS is installed in the engine compartment on the RH (right-hand)side of the bulk head. Depending on the CJB configuration, the BBUS can be used to produce the audio acknowledgment for arming and disarming of the active anti-theft system as well as the audio warning after an alarm has been triggered.

The BBUS is normally operated by a permanent battery feed from the central junction box (CJB). An integral 7.2 V rechargeable battery powers the BBUS if it is disconnected from the vehicle battery.

The BBUS sounds when it receives an alarm or acknowledgment signal from the CJB. While the active anti-theft system is armed, the BBUS also monitors the battery power supply and the arm/disarm signal line from the CJB, and operates the sounder if the battery power supply or the arm/disarm signal line is disconnected. The CJB arms and disarms the BBUS together with the rest of the active anti-theft system.

Once an alarm has been triggered, the BBUS cycles the sounder on for 30 seconds and off for 10 seconds, for 5 minutes or until it receives a disarm signal from the CJB. If the alarm trigger is still present, the 5 minutes of on/off cycles is repeated a further 2 times.

VOLUMETRIC SENSOR (IF FITTED)

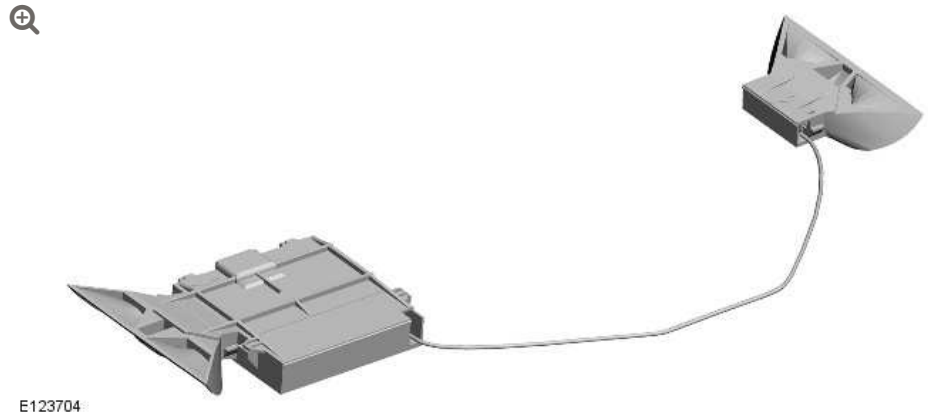

The volumetric sensor is installed behind openings in the rear interior lamp and monitors for intrusion into the passenger compartment when the alarm is armed.

The volumetric sensor consists of a microcontroller, two acoustic transmitters one acoustic receiver. One transmitter pair and a receiver face forwards and one transmitter faces rearwards to ensure complete coverage of the passenger compartment. The front transmitter pair and receiver are in a rubber mounting attached to the microcontroller housing. The rear transmitter is in a remote rubber mounting and connected to the microcontroller housing by a two wire lead.

The volumetric sensor is powered by a permanent battery feed from the CJB. The CJB activates and de-activates the volumetric sensor when it arms and disarms the active anti-theft system. When the volumetric sensor is active it outputs ultrasonic pulses from the transmitters and checks the echoes picked up by the receivers for changes to the passenger compartment profile. If it detects a change of profile indicating movement in the passenger compartment the volumetric sensor reports the alarm to the CJB.

Each time the volumetric sensor is activated it performs a self test. If there are no faults the volumetric sensor sends an acknowledgment

signal to the CJB. If the CJB does not receive the acknowledgment signal it de-activates the volumetric sensor.

TILT SENSOR (IF FITTED)

The tilt sensor monitors for changes of vehicle attitude while the alarm is armed. The tilt sensor is installed within the BBUS sounder and is located in the engine compartment on the RHside of the bulk head.

The tilt sensor incorporates a two axis sensor controlled by a microprocessor. A permanent battery feed from the CJB powers the tilt sensor. The CJB activates and de-activates the tilt sensor when it arms and disarms the active anti-theft system.

The tilt sensor measures the longitudinal and transverse angles of the vehicle over a range of ±16 degrees from the horizontal. When the tilt sensor is activated, it stores the current angles in memory. If the vehicle changes attitude in either direction by more than the limit the tilt sensor sends an alarm signal to the CJB, which triggers the BBUS.

NOTE:

If the security systems detects a fault with the tilt sensor it will indicate this by emitting 2 error tones from the alarm siren when the vehicle is unlocked and disarmed.

Each time the tilt sensor is activated it performs a self test. If there are no faults the tilt sensor sends an acknowledgment signal to the CJB. If the CJB does not receive the acknowledgment signal it de-activates the tilt sensor.

SYSTEM OPERATION

The active anti-theft system arms and disarms in conjunction with the locking and unlocking of the central locking system. Depending on the configuration of the CJB, the active anti-theft system can be armed and disarmed when the locking system is activated with the smart key. Visual and audible confirmation of the active anti-theft system arming and disarming, using the direction indicators and the BBUS, are also configurable in the CJB.

When the vehicle is superlocked, the CJB sends an arming signal to the tilt sensor, the BBUS and the volumetric sensor. If the CJB does not receive an acknowledgment signal from the tilt sensor and the volumetric sensor within 1 second, the CJB disables the associated alarm feature for the remainder of the armed cycle.

To set alarm sensors override/partial alarm protection, select alarm sensors to off on the vehicle instrument cluster menu and then press the lock button twice within three seconds. The hazard warning lights will flash twice to confirm the locking state and an audible arm chirp will sound to confirm the vehicle is double locked. The alarm LED in the vehicle instrument cluster will begin to flash once every 2 seconds to confirm the alarm state. This feature prevents accidental triggering of the active anti-theft system during transportation of the vehicle or if a pet is left in the vehicle.

VOLUMETRIC SENSING

The CJB begins volumetric sensing 30 seconds after the alarm being armed and the vehicle is double locked.

If the alarm has been triggered, the CJB will ignore further volumetric sensor signals for the duration of the alarm. The CJB resumes volumetric sensing 30 seconds after the alarm has stopped sounding.

Volumetric sensing and tilt sensing are disabled if the CJB receives a tail door open signal from the smart key. The CJB resumes

volumetric sensing and tilt sensing 30 seconds after the upper tail door closes again.

NOTE:

> If the security systems detects a fault with the volumetric sensor it will indicate this by emitting 2 error tones from the alarm siren when the vehicle is unlocked and disarmed.

EMERGENCY DISARMING

If the alarm has been triggered and cannot be disarmed with the smart key, it can be disarmed with the ignition switch as follows:

1. Unlock the left-hand front door using the emergency key blade.
2. Authenticate the Land Rover smart key by holding the smart key adjacent/over the immobilizer antenna unit, located on the central fascia.
3. Press the Start/Stop button to authenticate the Land Rover smart key.
4. The alarm will be disarmed.

NOTE:

> When the left-hand front door is unlocked and opened using the emergency key, the alarm will sound until the Land Rover Smart Key is authenticated.

DEACTIVATING THE ALARM WHEN TRIGGERED

If the alarm has been triggered, it can be deactivated by any one of the following methods

Pressing the unlock button on the Land Rover smart key.

- Pressing the START/STOP button with a valid Land Rover smart key present.
- Authenticating the Land Rover smart key via the immobilizer antenna unit.

CONTROL DIAGRAM

NOTE:

A = Hardwired connection; O = LIN bus

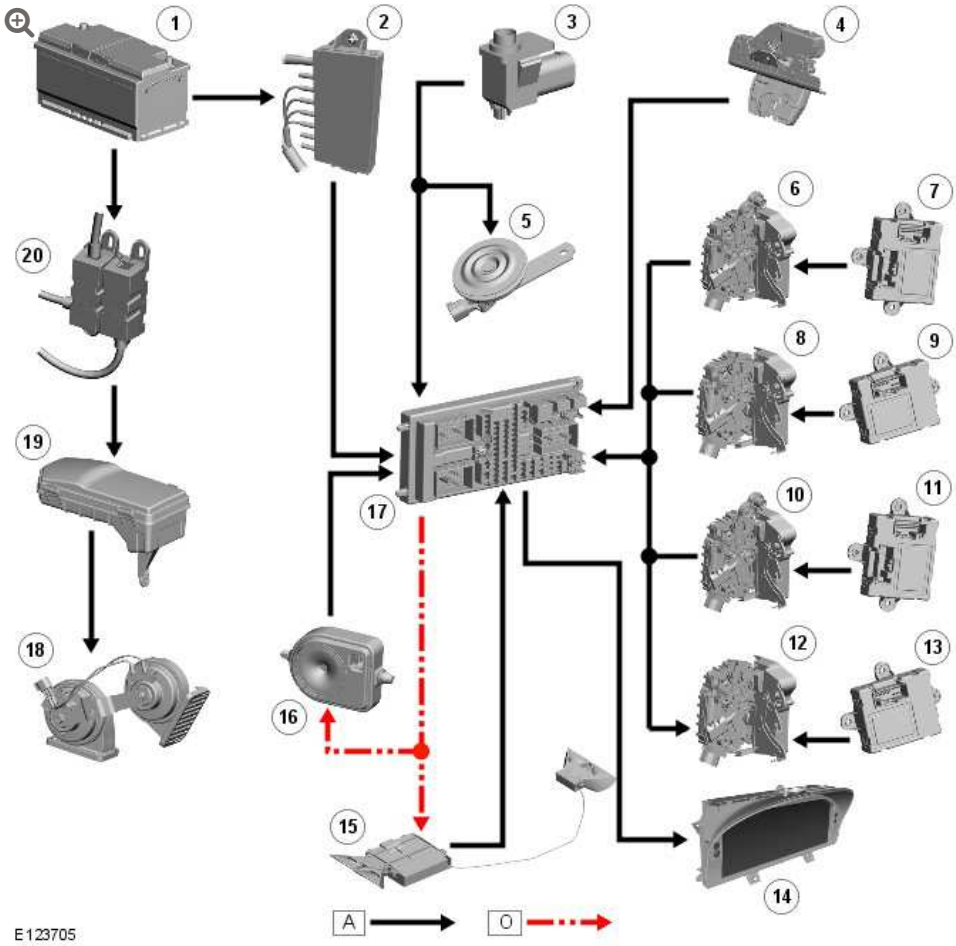

ITEM	DESCRIPTION
1	Battery
2	BJB (battery junction box)

ITEM	DESCRIPTION
3	Hood ajar switch
4	Upper tailgate ajar switch (integrated into latch)
5	Passive sounder (if fitted)
6	right-hand (RH) rear door latch
7	RH rear door module
8	left-hand (LH) rear door latch
9	LH rear door module
10	Driver door latch
11	Driver door module
12	Passenger door latch
13	Passenger door module
14	Instrument cluster
15	Volumetric sensor (if fitted)
16	BBUS/Tilt sensor
17	CJB
18	Horns
19	EJB (engine junction box)

ANTI-THEFT – ACTIVE

HOOD SWITCH (G928156)

REMOVAL AND INSTALLATION

86.77.20	SWITCH - HOOD - ALARM SYSTEM - RENEW	ALL DERIVATIVES	0.1	USED WITHINS	+

REMOVAL

1. 

   Disconnect the hood switch electrical connector.

2. Remove the hood switch from the plenum chamber support.

INSTALLATION

1. Install the hood switch to the plenum chamber support.

2. Connect the hood switch electrical connector.

INCLINATION SENSOR (G909262)

REMOVAL AND INSTALLATION

REMOVAL

1. Remove the generic electronic module (GEM).
   For additional information, refer to: Generic Electronic Module (GEM) (419-10, Removal and Installation).

2. 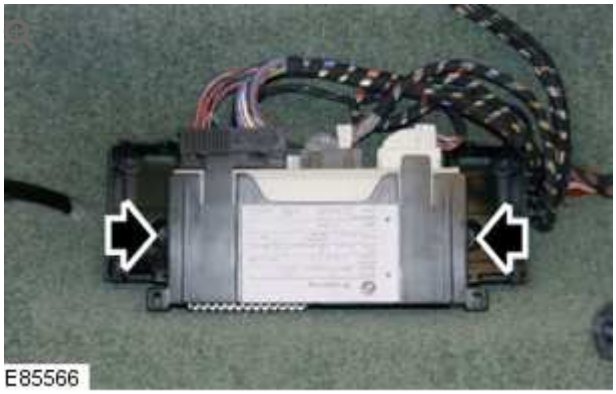

   Remove the inclination sensor.
   - Disconnect the electrical connector.

INSTALLATION

1. Install the inclination sensor.

- Connect the electrical connector.

2. Install the GEM.
   For additional information, refer to: Generic Electronic Module (GEM) (419-10, Removal and Installation).

3. Using the Land Rover approved diagnostic equipment, follow the on-screen instructions and configure the inclination sensor.

ANTI-THEFT - ACTIVE

INTRUSION SENSOR (G916062)

REMOVAL AND INSTALLATION

REMOVAL

1.

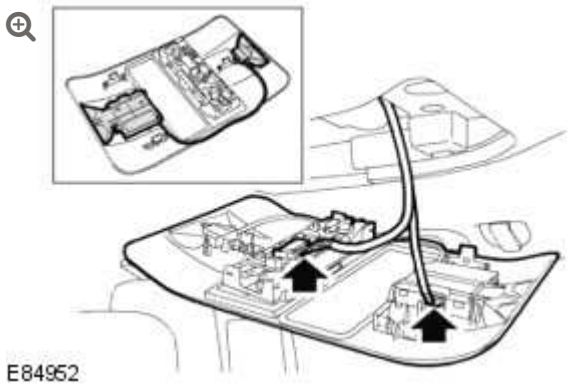

Remove the center overhead console.

- Carefully release the 3 clips.
- Disconnect the 3 electrical connectors.

2. Remove the intrusion sensor and module from the center overhead console.
   - Release from the 2 clips.

INSTALLATION

1. Install the intrusion sensor and module to the center overhead console.
    - Secure in the 2 clips.

2. Install the center overhead console.
    - Connect the electrical connectors.
    - Secure the clips.

ANTI-THEFT - PASSIVE

DESCRIPTION AND OPERATION

COMPONENT LOCATIONS

NOTE:

RHD installation shown, LHD installation similar

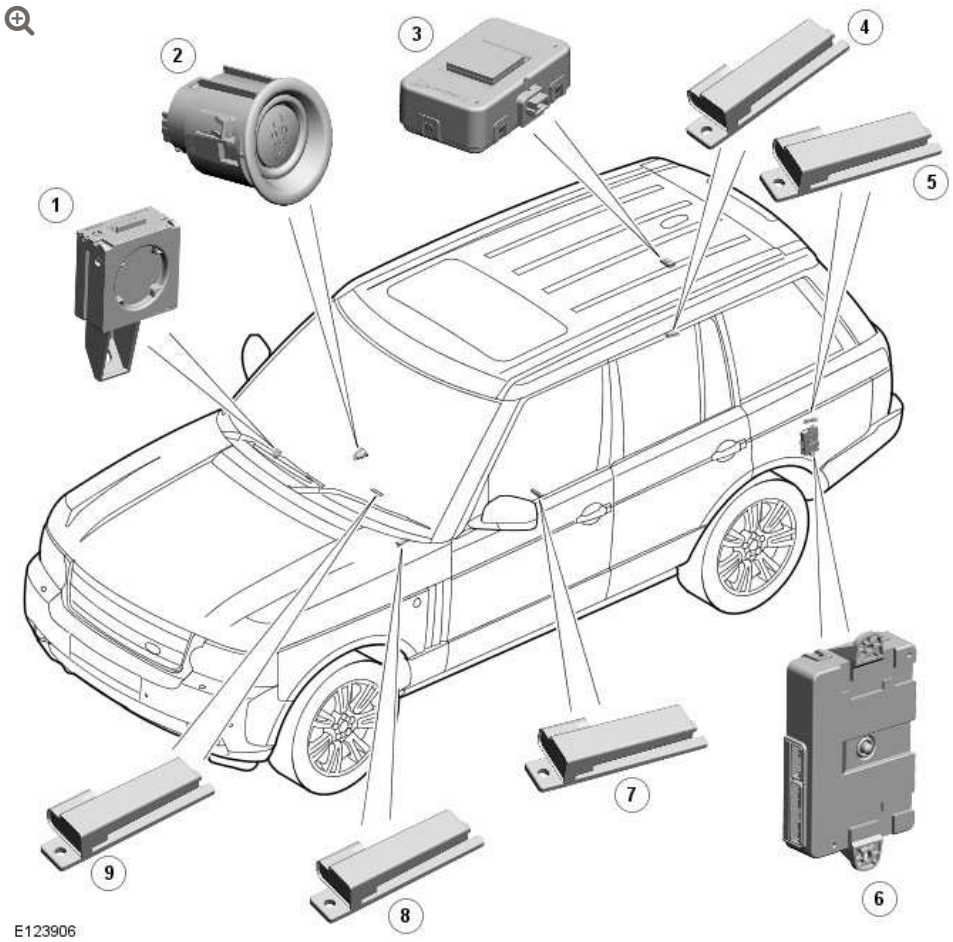

ITEM	DESCRIPTION
1	Immobilizer Antenna Unit (IAU)
2	Stop/Start switch
3	Radio Frequency (RF) receiver
4	Interior Antenna RH (right-hand) luggage compartment
5	Interior Antenna LH (left-hand) luggage compartment
6	Keyless Vehicle Module (KVM)
7	Interior antenna - rear compartment
8	Interior antenna - front compartment
9	Interior antenna - front compartment

OVERVIEW

The passive anti-theft system provides a secure interface between the CJB (central junction box) and the ECM (engine control module), to prevent unauthorized starting of the vehicle. Unauthorized starting prevention is achieved by immobilization of the engine crank system and the fuel system.

The passive anti-theft system is a function of the 'Passive Start' system. The system uses the following components:

- Smart key
- Low Frequency (LF) antennas (5 off)
- Radio Frequency (RF) receiver
- Keyless Vehicle Module (KVM)
- Immobilizer Antenna Unit (IAU)
- CJB
- ECM.

The system is automatic and requires no input from the driver other than to press the brake pedal and the start/stop button. The engine management system will only allow engine crank and fuelling when an authorization data message is received from the CJB.

Engine starting is prevented by inhibiting the fuel, engine (spark, injectors and crank) and ignition systems from operating. This is achieved by using a uniquely coded Smart Key and an encoded data exchange between multiple control modules.

The engine start system is initiated when the encoded data between the Smart Key and KVM and CJB and ECM is verified. The engine can then be started when the drive selector is in the 'Park' position, and the start/stop button and the brake pedal are pressed simultaneously.

SYSTEM OPERATION

PASSIVE START SYSTEM

At the request of the CJB, the KVM prompts each of the LF antennas to output a signal. When the Smart Key is in the vehicle cabin, it detects the LF signals and responds with a RF data-identification signal back to the KVM via the RF receiver.

If the data received matches that stored in the KVM it continues the passive start process by communicating a 'Smart Key valid' signal to the CJB via the medium speed CAN (controller area network) bus.

Once the CJB receives the authorization and confirms the response with an internal calculation, it passes coded data to the ECM on the high speed CAN bus. Upon confirmation from the ECM the ignition is enabled.

Before the CJB sends a mobilization signal to the ECM it will exchange encrypted data with the electric steering lock and the instrument cluster to authorize unlocking of the steering column. The instrument cluster only provides a ground for the steering lock motor.

The CJB will enable the fuel pump relay which, on diesel vehicles operates the fuel pump and on gasoline vehicles sends a battery voltage supply to the FPDM (fuel pump driver module) to operate the fuel pump in conjunction with the ECM.

If the transmission selector is in the park position and the driver presses the brake pedal and simultaneously presses the start/stop button, the CJB interprets this as an engine crank request. Before the engine crank request is allowed, the CJB compares a brake pressure signal received from the ABS (anti-lock brake system) module. If the signal is greater than the stored threshold value, a crank request signal is sent to the ECM on the high speed CAN bus.

NOTE:

If the KVM fails to locate the Smart Key, a message 'SMART KEY NOT FOUND REFER TO HANDBOOK' will appear in the instrument cluster message center and the keyless start back-up process will have to be used to mobilize and start the vehicle.

KEYLESS START BACK-UP

If the vehicle has been unlocked using the emergency key blade or the Smart Key is not detected by the vehicle, it will be necessary to use the keyless start back-up system to disarm the alarm and start the engine. The following process must be followed in this event:

- Position the Smart Key against the underside of the instrument panel, on the outboard side of the steering column, with the buttons facing downwards. This is the location of the IAU.
- Holding the Smart Key in position and with the brake pedal depressed, press the start/stop button to start the engine.

Position of Smart Key on instrument panel.

NOTE:

LHD (left-hand drive) shown RHD (right-hand drive) similar.

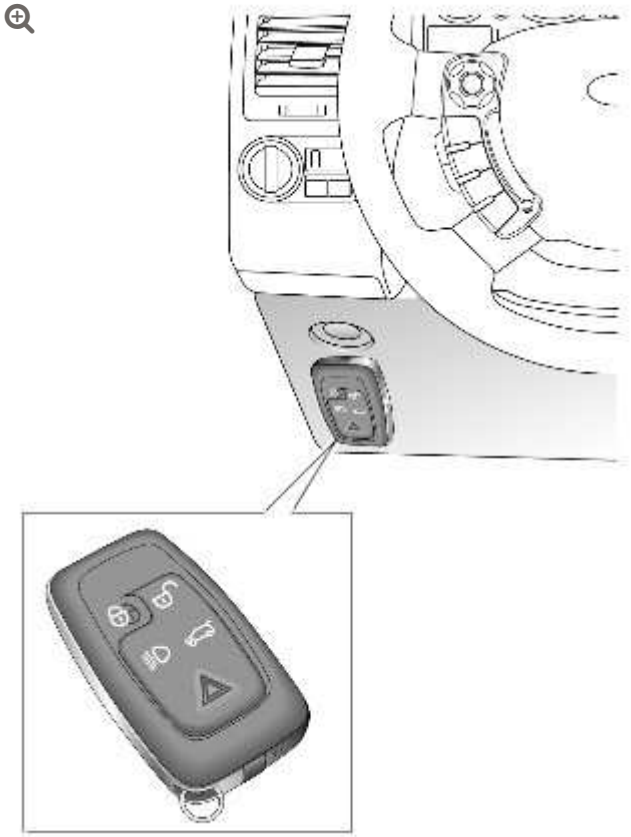
E125169

This process bypasses the data exchange between the KVM and the CJB. A transponder within the Smart Key is detected by the IAU. The IAU confirms the code output from the transponder and communicates this code confirmation with the CJB via a LIN (local interconnect network) bus connection. The CJB then initiates the vehicle start process in the normal manner.

COMPONENT DESCRIPTION

IMMOBILIZER ANTENNA UNIT (IAU)

NOTE:

RHD shown LHD similar.

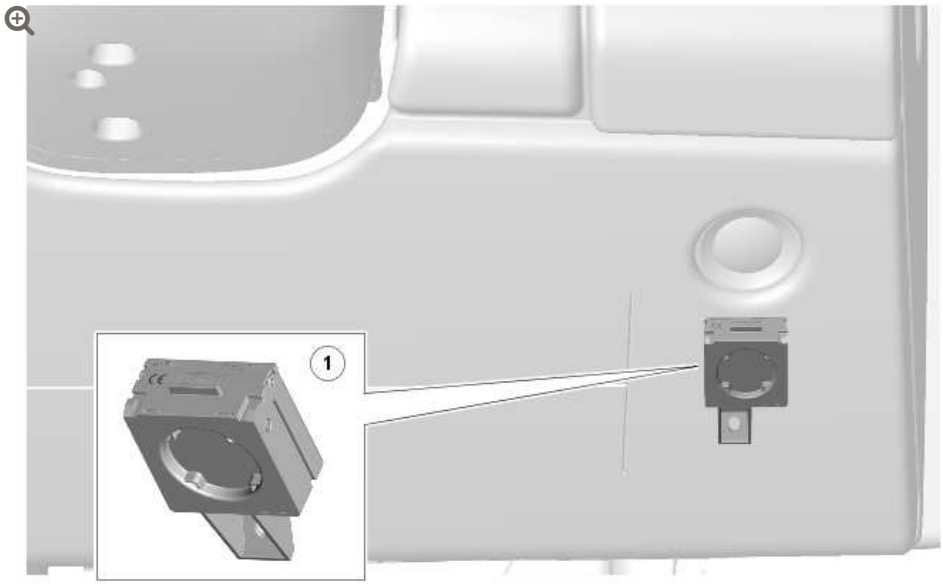

ITEM	DESCRIPTION
1	IAU

The IAU is located on the underside of the instrument panel, outboard of the steering column, below the footwell lamp. The IAU cannot be seen as it is located behind the trim panel. The IAU is used if the KVM is unable to authorize the Smart Key. The driver will be alerted to this by a chime and a message in the instrument cluster message center 'SMART KEY NOT FOUND REFER TO HANDBOOK'.

If the KVM is unable to identify the Smart Key, for example if the Smart Key battery voltage is low or there is local RF interference, the transponder within the Smart Key can be read by holding the smart key against then instrument panel in the position shown in the illustration.

LOW FREQUENCY (LF) ANTENNAS

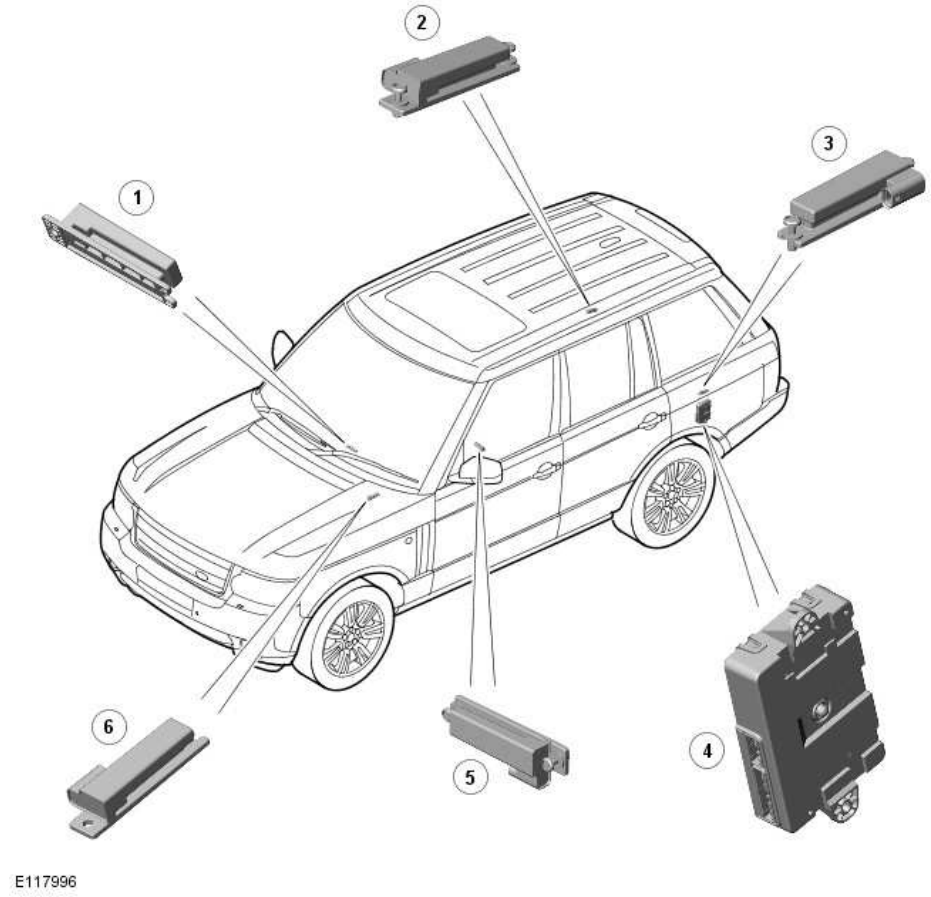

ITEM	DESCRIPTION
1	Interior antenna - front compartment
2	Interior antenna RH - luggage compartment
3	Interior antenna LH - luggage compartment
4	Keyless Vehicle Module (KVM)
5	Interior antenna - rear compartment
6	Interior antenna - front compartment

Five Low Frequency (LF) antennas for the passive start system are positioned in specific locations within the vehicle.

The KVM transmits an LF signal via the antennas which is received by the Smart Key. The Smart Key then responds by transmitting a RF

signal which is received by the RF receiver and passed to the KVM for authorization.

KEYLESS VEHICLE MODULE (KVM)

The KVM is located in the LH side of the luggage compartment, behind the trim panel and receives a power supply from the CJB. A serial communication line from the KVM to the RF receiver (which is located behind the headlining, rearward of the sunroof), transmits coded data from the Smart Key to the KVM for vehicle locking and unlocking using the Smart Key buttons.

The KVM controls LF signal transmissions to and from the Smart Key and provides authorization to allow the vehicle to be started. The module has a medium speed CAN bus connection to the CJB for authorizing vehicle starting.

CONTROL DIAGRAM

NOTE:

A = Hardwired; **D** = High speed CAN bus; **F** = RF transmission; **N** = Medium speed CAN bus; **O** = LIN bus; **AH** = Serial communication line

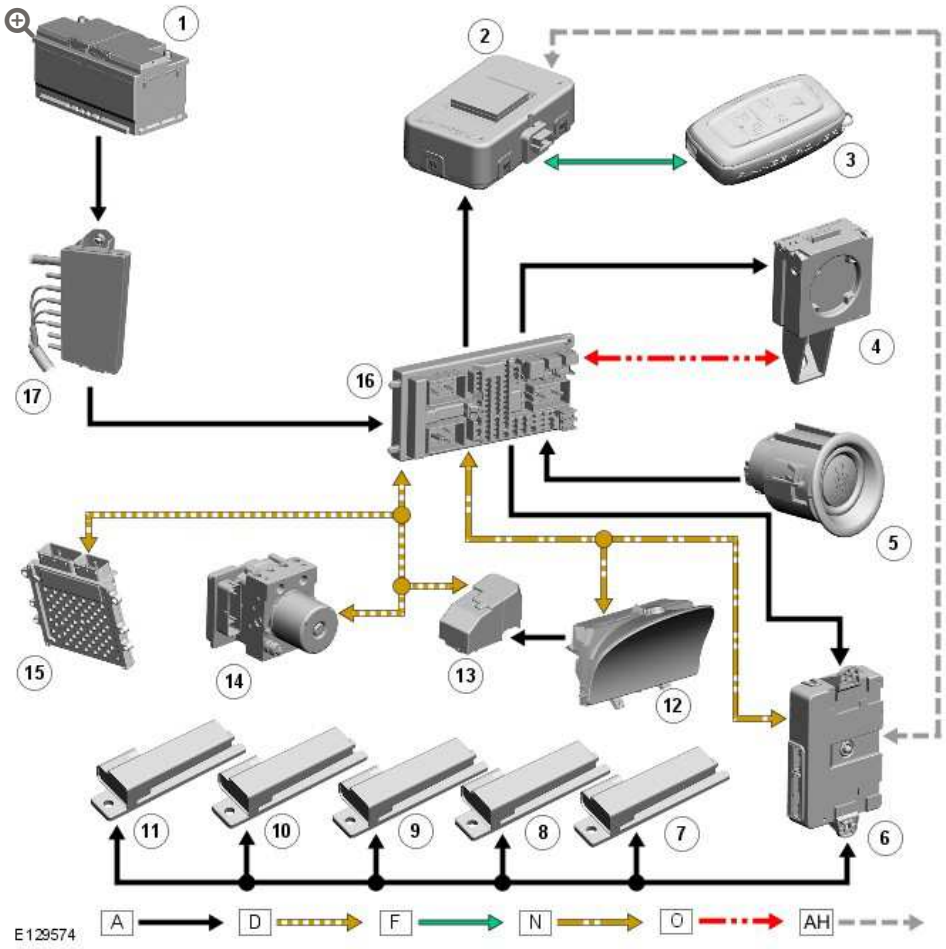

ITEM	DESCRIPTION
1	Battery
2	RF receiver
3	Smart Key
4	IAU
5	Stop/Start switch
6	KVM
7	Interior antenna
8	Interior antenna
9	Interior antenna
10	Interior antenna
11	Interior antenna
12	Instrument cluster

ITEM	DESCRIPTION
13	Electric steering column lock
14	ABS module
15	ECM
16	CJB
17	BJB (battery junction box)

PASSIVE ANTI-THEFT SYSTEM (PATS) MODULE

(G1652216)

REMOVAL AND INSTALLATION

REMOVAL

NOTE:

Removal steps in this procedure may contain installation details.

1. Disconnect the battery ground cable.
   Refer to: Specifications (414-00, Specifications).

2.

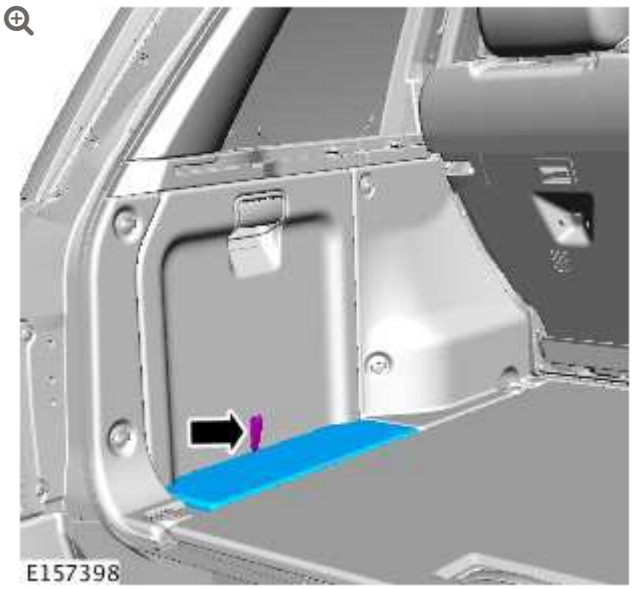

3.

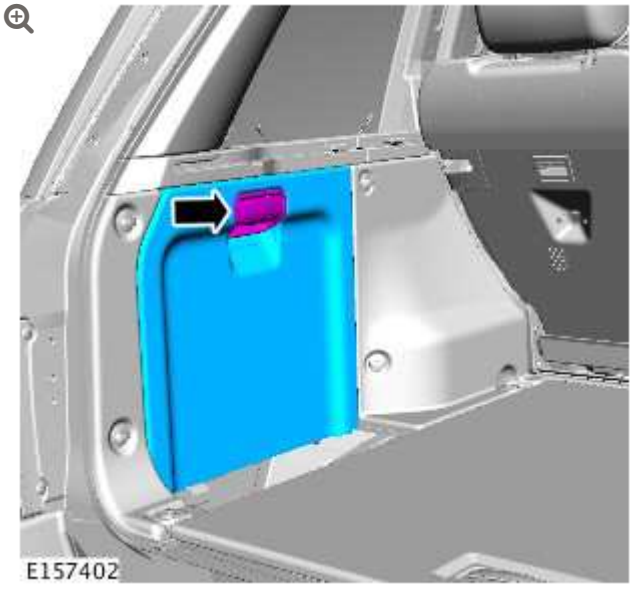

4.

CAUTION:

Cover fibre optic cable connectors to minimise dust ingress and avoid bending the cables in a radius of less than 30mm.

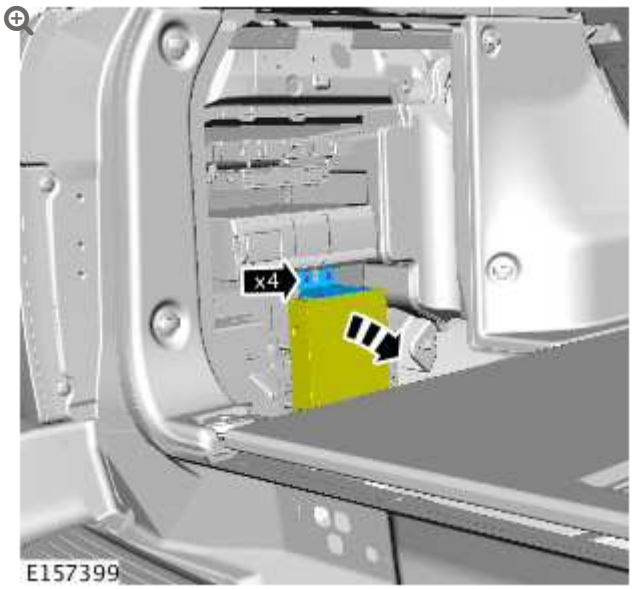

Torque: **10 Nm**

5.

CAUTION:

Take extra care when removing the component.

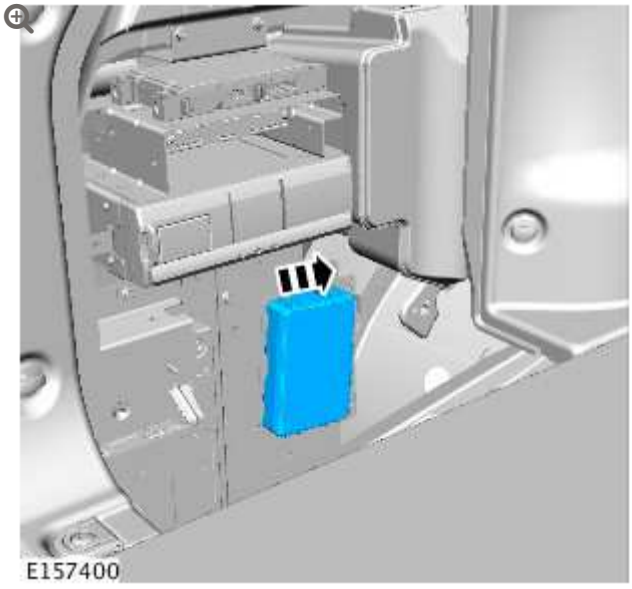

6.

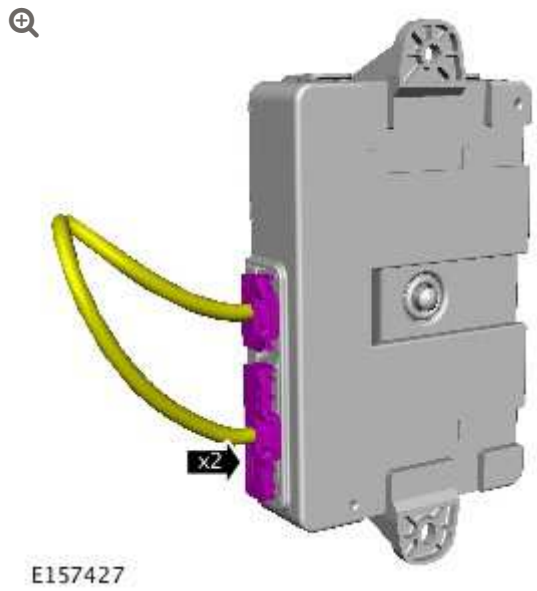

INSTALLATION

1. To install reverse the removal sequence.

2. Using the Land Rover approved diagnostic system, configure the module.

NAVIGATION SYSTEM

NAVIGATION SYSTEM DIGITAL VERSATILE DISC (DVD) UNIT (G927022)

REMOVAL AND INSTALLATION

REMOVAL

1. **CAUTION:**

   After switching off the ignition, wait for 2 minutes before disconnecting the battery. Failure to wait for 2 minutes will damage the navigation computer.

   Disconnect the battery ground cable.
   For additional information, refer to: Specifications (414-00, Specifications).

2. Remove the access panel from the loadspace trim panel LH.

3.

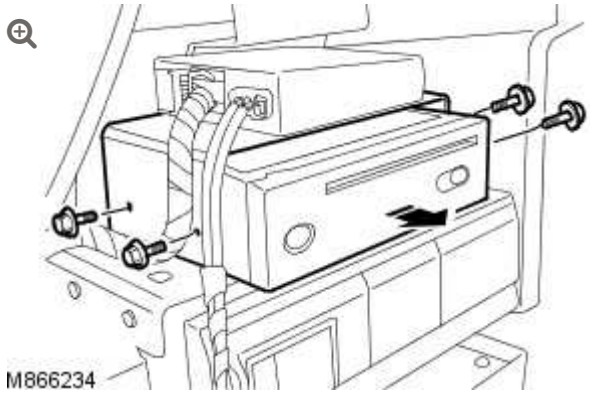

Release the navigation system digital versatile disc (DVD) unit.

4. 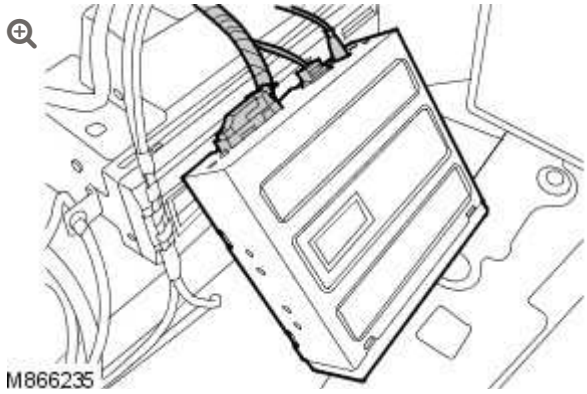

Remove the navigation DVD unit.

- Disconnect the coaxial cable connector.
- Disconnect the 2 electrical connectors.

INSTALLATION

1. Install the navigation DVD unit.
   - Connect the coaxial cable connector.
   - Connect the electrical connectors.
2. Secure the navigation DVD unit.
   - Tighten the bolts to 4 Nm (3 lb.ft).

3. Install the access panel to the loadspace trim panel LH.

4. Connect the battery ground cable.
   For additional information, refer to: Specifications (414-00, Specifications).

5. Using the Land Rover approved diagnostic equipment, follow the on-screen instructions and configure the navigation DVD unit.

2012.0 RANGE ROVER (LM), 419-07

NAVIGATION SYSTEM

DESCRIPTION AND OPERATION

Component Location

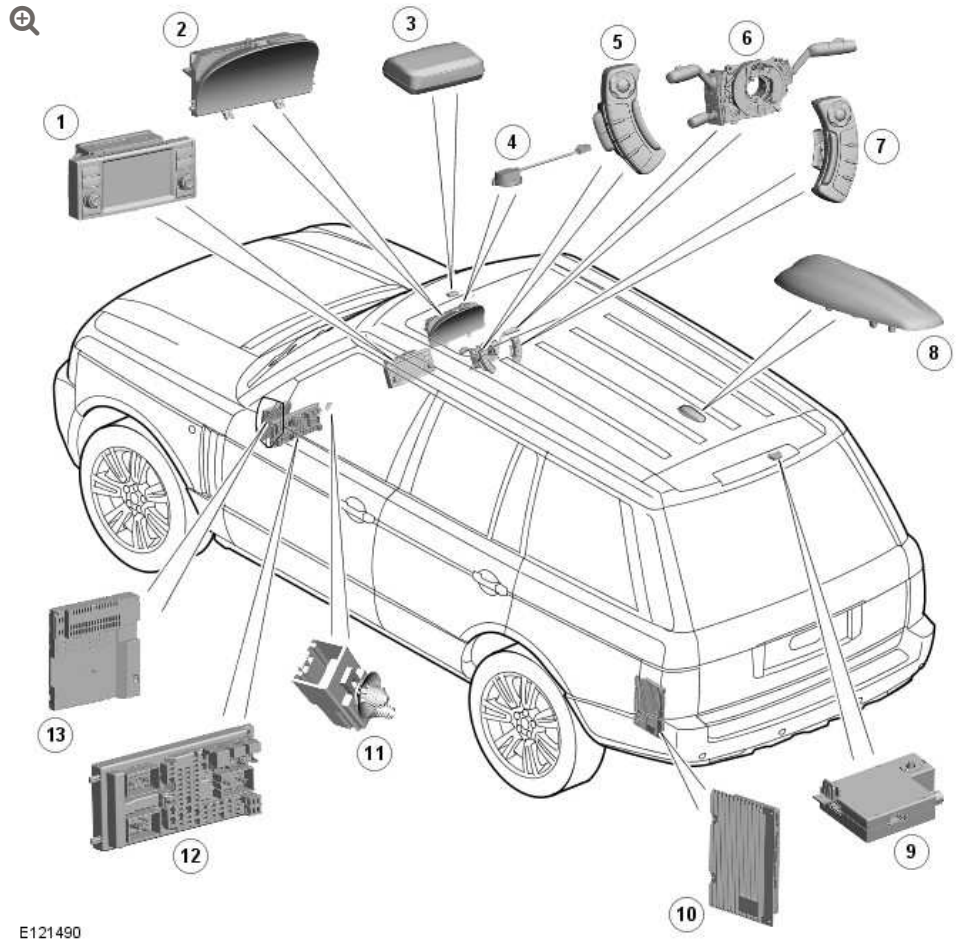

ITEM	DESCRIPTION
1	Touch Screen Display (TSD)
2	Instrument cluster
3	VICS beacon antenna (Japan only)

ITEM	DESCRIPTION
4	Microphone - Voice recognition
5	LH steering wheel switches
6	Clockspring
7	RH steering wheel switches
8	Roof pod (GPS (global positioning system) antenna)
9	Traffic Message Channel (TMC) tuner or VICS receiver (Japan Only)
10	Power amplifier
11	Navigation update socket
12	CJB (central junction box)
13	IHU (integrated head unit)

OVERVIEW

The navigation system provides audible and visual route guidance information to enable the driver to reach a desired destination. The system allows the driver to choose the desired route using minor or major roads or highways with the option of three routes. Directions to hospitals, museums, monuments and hotels are also available. Map information stored on a hard drive located within the TSD (touch screen display) is used to determine the best route for the journey and provide the driver with details of directions and approaching junctions.

If the vehicle requires a map upgrade or a new region loading an enabling code along with the map data must be purchased. Map upgrades to the hard drive unit need to be carried out by a Land Rover dealer using Land Rover approved diagnostic equipment.

TRAFFIC MESSAGE CHANNEL (TMC)

The Traffic Message Channel (TMC) traffic data is currently broadcast in many European countries.

TMC is a function of the FM (frequency modulation) Radio Data System (RDS). The system broadcasts real-time traffic and weather information. TMC information is received via the normal FM radio antenna.

The TMC (Traffic Message Channel) is a function of the FM RDS (Radio Data System). The system broadcasts real-time traffic and weather information. Data messages are received and decoded by the TSD (touch screen display) and passed onto the navigation system advising the driver of any evasive action required during the journey.

TMC traffic information systems conform to a global standard that has been adopted by:

- traffic data gatherers
- Information service providers
- Broadcasters
- Vehicle/receiver manufacturers

All TMC receivers use the same list of event codes, while the location database (on the map disc) contains both a country-specific set of location codes for the strategic European road network.

VEHICLE INFORMATION AND COMMUNICATION SYSTEM (VICS)

The Vehicle Information and Communication System (VICS) is broadcast in the Japanese market.

The VICS system supplies the navigation computer with information that enables the computer to inform the vehicle driver of traffic

conditions in the vehicle's vicinity and calculate an alternative route if necessary. Information is transmitted to the navigation system through three routes:

-

RADIO FREQUENCY TRANSMISSION

Radio frequency transmission is generally transmitted from road side beacons mainly on highways. The information transmitted is:

- Traffic congestion
- Travel time to next intersection
- Traffic conditions in surrounding areas and highway junctions
- Traffic accidents
- Speed limits
- Lane regulations
- Tire change
- Parking availability at highway service areas and parking areas.

INFRA-RED TRANSMISSION

Infra-red transmission is received by the beacon antenna mounted on the top of the instrument panel. Infra-red transmissions are transmitted from road side beacons on major trunk roads. The information transmitted is:

- Traffic congestion and travel time
- Traffic accidents
- Breakdowns
- Road works restrictions
- Parking availability.

FM (FREQUENCY MODULATION) TRANSMISSIONS

FM (frequency modulation) transmissions are received via the FM antenna, broadcast as part of the normal RDS FM transmission. The information transmitted is:

- Traffic congestion and travel time for wide areas
- Traffic accidents, road works, speed limits and lane restrictions for a wide area
- Parking availability information.

CONTROL DIAGRAM

NOTE:

A = Hardwired; N = Medium speed CAN bus; O = LIN bus; P = MOST; AF = Firewire

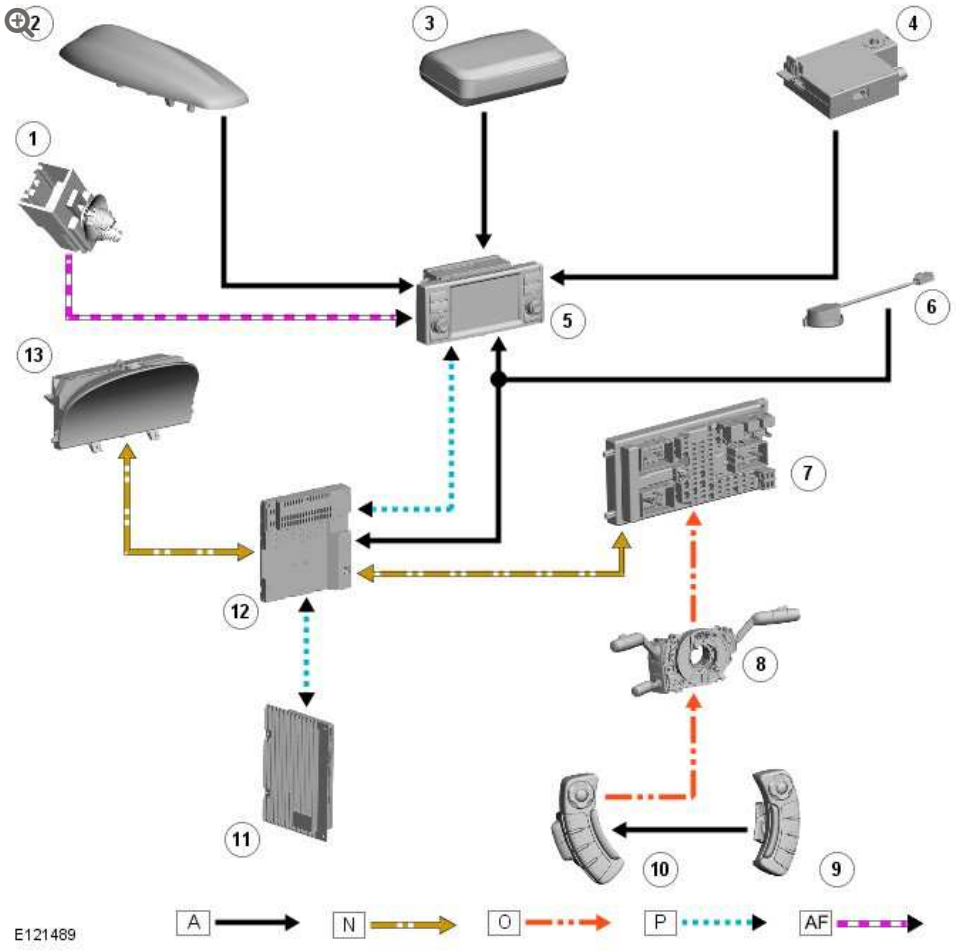

ITEM	DESCRIPTION
1	Navigation update socket
2	Roof pod antenna
3	VICS antenna (Japan Only)
4	Traffic Message Channel (TMC) tuner or VICS receiver (Japan Only)
5	TSD (touch screen display)
6	Microphone - Voice recognition
7	CJB (central junction box)
8	Clockspring
9	RH steering wheel switches
10	LH steering wheel switches
11	Power amplifier
12	IHU (integrated head unit)

ITEM	DESCRIPTION
13	Instrument cluster

PRINCIPLES OF OPERATION

The system used to calculate the current position of the vehicle is called the Global Positioning System (GPS). Satellites transmit radio signals to provide information about the satellite's position, for example the latitude, longitude, altitude, almanac data and an accurate time signal generated by an on-board atomic clock. Each satellite contains four atomic clocks.

The vehicle needs to receive data from at least four different satellites to give a three dimensional fix on its current position.

As the vehicle moves, this information is continually being updated. The TSD determines which satellites are 'visible' to the system and their current position and relationship to each other. Using this information the TSD can account for positional deviations of the satellites and compensate to enhance the accuracy of the navigation system.

The Global Positioning System (GPS) signal is also known as the Precision Positioning Signal (PPS).

PPS predictable accuracy is:

- 22 meters horizontal accuracy
- 27.7 meters vertical accuracy
- 200 nanoseconds time accuracy.

The navigation system receives GPS information via the GPS antenna. The GPS signals are used by the TSD to calculate the vehicles position. Once the driver has entered a destination, the TSD

can calculate a route, based on the driver's pre-determined preferences or the default settings in the TSD.

The navigation system receives GPS (global positioning system) information via the GPS antenna. The GPS signals are used by the TSD to calculate the vehicles position. Once the driver has input a desired destination the TSD can calculate a route, based on the drivers pre-determined preferences or the default settings in the TSD.

The navigation system is accessed by pressing the navigation soft key on the touch screen display.

Navigation is initiated by the driver entering a destination. This can be achieved by:

-
- Entering in an address using the touch screen display.
- Entering a post code.
- Choosing a previous destination
- Choosing a point of interest from the hard drive database.
- Choosing the home location
- Choosing a memory stored location.

The driver is then guided to the destination by a scrolling map display and voice guidance. The display can be varied by scale and display type.

In addition to the navigation system there are two market dependant systems that supply extra information to the navigation system and the driver. These are:

- Traffic Message Channel (TMC) – Europe only.

- Vehicle Information and Communication System (VICS) - Japan only.

NAVIGATION SYSTEM COMPONENTS

TOUCH SCREEN DISPLAY (TSD)

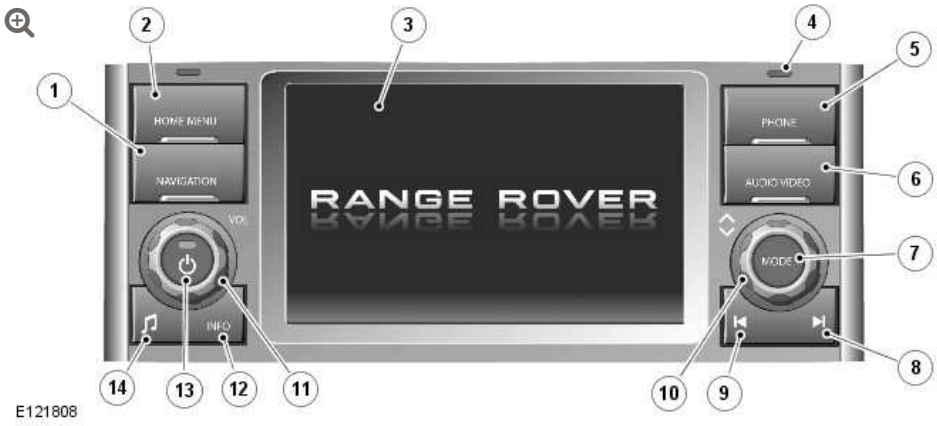

ITEM	DESCRIPTION
1	Navigation
2	Home menu
3	Touch screen display
4	Light sensor
5	Telephone
6	Audio/Video
7	Search up/increase
8	Mode
9	Search down/decrease
10	Scroll up/down
11	Volume
12	Information
13	Audio on/off
14	Tone

ITEM	DESCRIPTION

The Touch Screen Display (TSD) is located in the center of the instrument panel and is the driver control interface for the navigation system. The TSD is connected to the MOST ring and communicates with the other components in the audio/infotainment system.

The TSD also provides driver display and control of the audio system, telephone, the proximity cameras, the Venture Cam, the Traffic Message Channel, the rear seat entertainment, the timed climate control and the alarm system valet mode.

The TSD is a seven inch touch sensitive, 1280 X 480 pixels LCD (liquid crystal display) VGA screen.

MICROPHONE

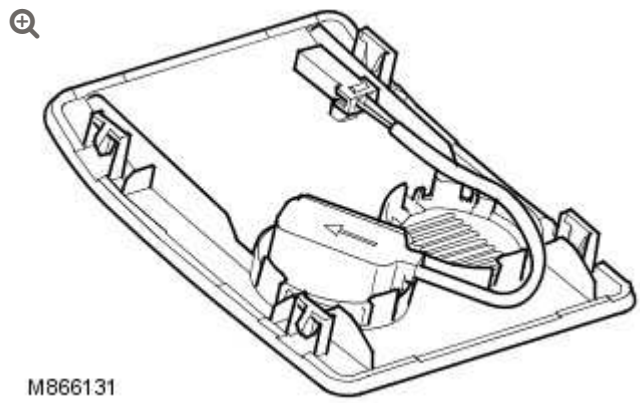

The microphone is located in the front interior lamp console. The standard, directional type microphone is connected to the Integrated Head Unit (IHU) for voice recognition of the navigation system and the telephone. The microphone has an integrated noise suppression system for hands-free telephone use.

TMC ANTENNA AMPLIFIER

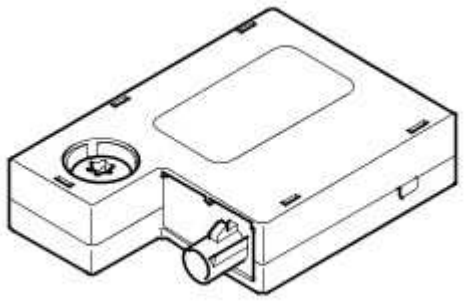

E48087

The TMC antenna amplifier is located in the upper tail door, adjacent to the center high mounted stop lamp. The amplifier is connected to the FM (frequency modulation) antenna which is integral with the rear screen.

ROOF MOUNTED ANTENNA POD

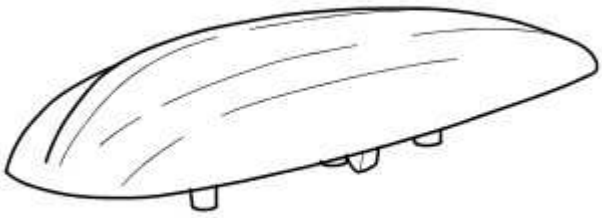

E120935

The roof mounted pod contains several antennas:

- GPS antenna
- SDARS antenna (NAS only).
- DAB antenna (band-L)

The roof mounted pod is a standard fit on all vehicles.

VICS BEACON ANTENNA (JAPAN ONLY)



The VICS beacon is located on top of the instrument panel on the right hand side. The beacon is located in an additional base attached to the top of the instrument panel and secured with a self adhesive pad. The beacon is connected to the touch screen display (TSD) via a screened co-axial cable.

VICS ANTENNA AMPLIFIER (JAPAN ONLY)

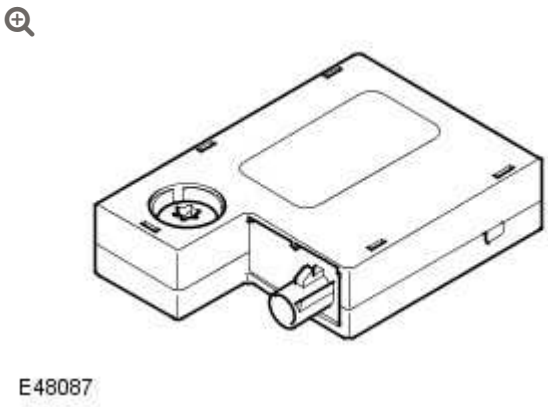

The VICS antenna amplifier is located in the upper tail door, below the center high mounted stop lamp. The amplifier is connected to the VICS receiver via a screened co-axial cable.

NAVIGATION SYSTEM DIAGNOSTICS

The TSD has an on-board diagnostics capability to allow the functionality of the following to be tested:

- Hard Key Test
- Touch screen test
- DTC information
- Vehicle configuration
- Configuration
- Vehicle signals
- Video inputs
- Self test
- Color Bar
- Software loading
-
- HDD (hard disc drive) information
- Vehicle information
- Microphone
- Voice output check

Use the following procedure to access to the diagnostic screens.

- Place vehicle into power mode 6
- Press the 'HOME' physical button
- In a central position at the top of the TSD, press the screen and hold for more than 5 seconds
- In the top LH corner of the TSD, press the screen and hold for more than 5 seconds, A 'Diag PIN Entry' entry box will appear.
- Enter the diagnostic PIN entry code of '753' and press the 'OK' virtual icon on the TSD. An 'On-Screen Diagnostics' menu screen will appear.

There are two diagnostic menu screens.

Diagnostic menu one contains the following options:

- Hard Key Test
- Touch screen test
- DTC information
- Vehicle configuration
- Configuration
- Vehicle signals
- Video inputs
- Self test

Diagnostic menu 2 contains the following options:

- Color Bar
- Software loading
-
- HDD (hard disc drive) information
- Vehicle information
- Microphone
- Voice output check

HARD KEY TEST

The hard key test is a function that allows all the TSD physical buttons to be tested whilst being displayed in the TSD.

TOUCH SCREEN TEST

The touch screen test function allows the TSD virtual keys to be tested and calibrated, when the touch screen test function is

selected the user is given two options 'Screen Calibration and 'Touch Screen Test'.

DTC INFORMATION

The DTC information function will perform a 'SELF CHECK' an internal diagnostic routine and display any DTC (diagnostic trouble codes) found.

VEHICLE CONFIGURATIONS

The vehicle configuration function allow the user to view the vehicle configurations.

CONFIGURATIONS

The configuration function shows the TSD configurations.

VEHICLE SIGNALS

The vehicle signals function allows the user to view vehicle senor signals and voltages.

VIDEO INPUTS

The video inputs function allows the user to set the TSD formats for the companion camera, rear view/proximity cameras and the TV and DVD.

COLOR BAR

The Color bar function allows the user to view the TSD Color bars.

LOADING

The Loading function is used for uploading navigation software via the navigation update socket.

HDD INFORMATION

The HDD function allows the user to view the hard drive serial number, operation time and model information. There is also a smart check function withing the HDD information.

VEHICLE INFORMATION

The vehicle information function allows the user to view vehicle configurations, GPS information and vehicle sensors. Japanese vehicles will also have a VICS option which will allow the user to look at the radio wave and infrared beacon signals along with the FM multi signal.

MICROPHONE

The microphone function allows the user to test the microphone input level.

VOICE OUTPUT CHECK

The voice output check allows the user to test the output level when voice recognition is activated.

VOICE RECOGNITION

The voice recognition system controls the following systems (where fitted):

- Telephone
- Notepad
- Navigation.

The voice recognition software is contained in the Touch Screen Display (TSD). The microphone is hardwired to the TSD for voice control and the IHU for telephone. The TSD will allow voice control of the telephone system, the Notepad and the navigation system. The TSD has limited language capability with German, French, Italian, Spanish, Dutch, USA and UK supported.

The voice recognition system enables the driver to activate functions of the system without operating controls manually. This allows the driver to concentrate on driving the vehicle, improving safety. When the driver speaks one of the defined voice commands, with the voice

recognition system active, the voice recognition software converts the command into a control signal for the system.

The Notepad function allows the driver to record notes of up to 30 seconds in length.

VOICE CONTROL ACTIVATION

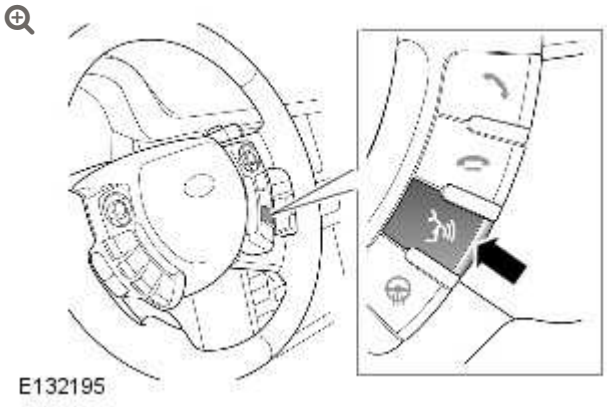

The voice control system is controlled and activated using the Voice button located on the RH (right-hand) steering wheel switch module. Press the switch once briefly to start a voice session and press and hold to cancel a voice session.

When a voice session is started, a tone will be emitted to indicate the system is waiting for a voice command from the driver.

Once a spoken command has been given, the system will repeat the command as understood by the system as confirmation. The command will be then be performed by the relevant system or the system will ask for further clarification of the command. Always wait until after the tone is heard before giving any further commands.

If a command is not understood by the system, it will respond with the response "Sorry". The driver then has two further attempts to give the command. If the system still does not understand the command, the voice session is cancelled.

Briefly pressing the Voice button during a voice session will interrupt the audible feedback. Wait for the tone to sound before giving the next command.

A command can be cancelled by the driver giving the command "Cancel" or by pressing and holding the voice button.

A double tone indicates the voice session has been cancelled.

Refer to the Owners Handbook for details of command lists and voice control of the telephone, notepad and navigation systems.

4X4 INFORMATION

SYSTEM FUNCTIONS

The 4X4 information system uses data from other systems to obtain the displayed information. The data is received from the CAN (controller area network).

STEERING ANGLE

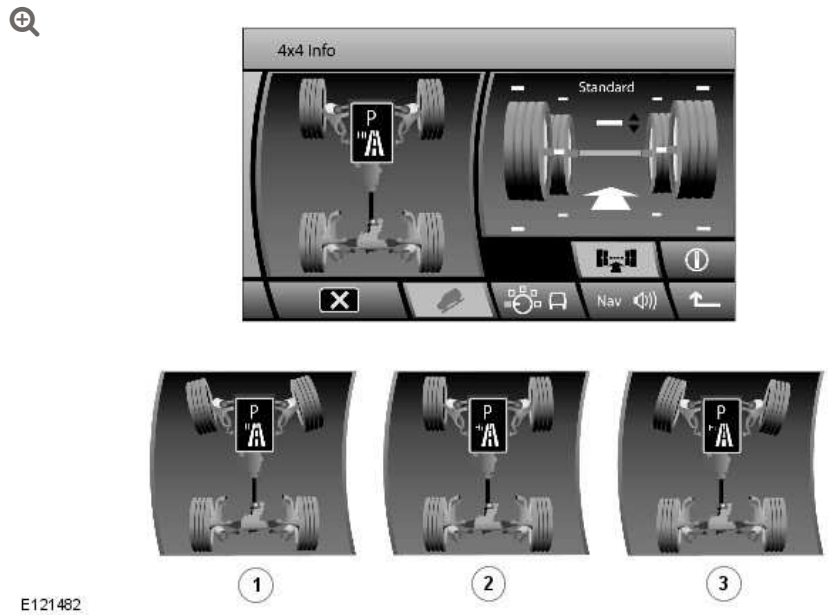

ITEM	DESCRIPTION
1	Steering in left hand turn

ITEM	DESCRIPTION
2	Steering in straight ahead
3	Steering in right hand turn

The steering angle is obtained from information broadcast by the steering angle sensor on the CAN (controller area network) . The sensor signal is used to display the orientation of the steered wheels in relation to a plan view of the chassis layout. The steering angle is displayed by one of thirteen graphics to show the full range of steering angle from lock to lock in increments of 5 degrees from the straight ahead position.

TRANSFER CASE

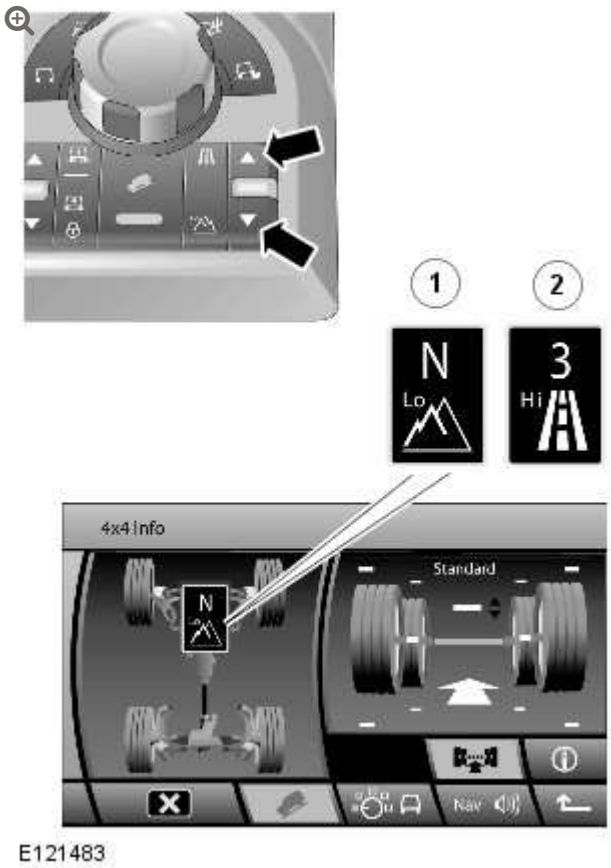

E121483

ITEM	DESCRIPTION
1	Low Range selected
2	High Range selected

The transfer case currently active setting is obtained from information broadcast by the transfer case control module on the CAN (controller area network) . The display can show low range, high range or neutral selection. The selected range icon flashes if a ratio change is in progress.

When neutral is selected, the display shows an 'N'. If the transfer case is in neutral but the automatic transmission is not in neutral, the selected gear on the transmission flashes until neutral is selected on the selector lever.

HILL DESCENT CONTROL (HDC)

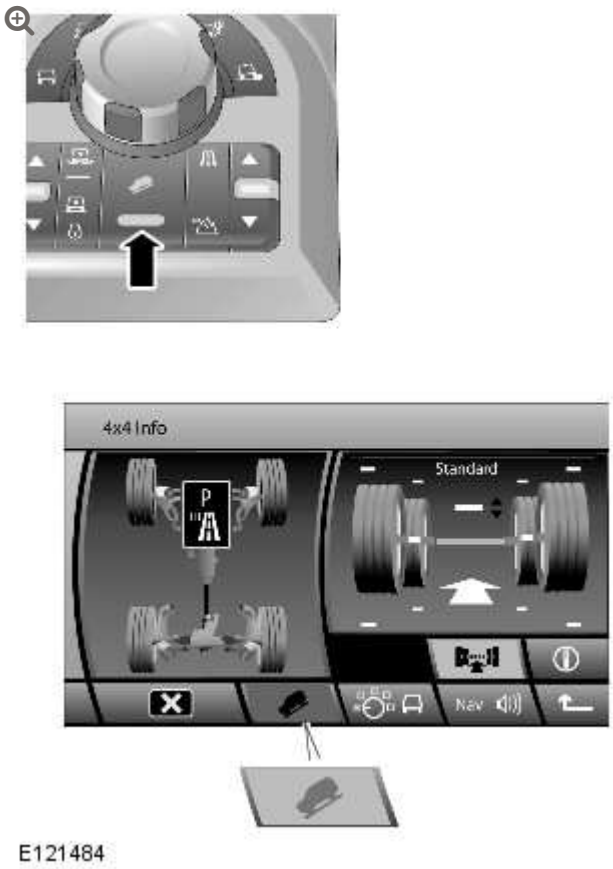

The HDC system current operating condition is obtained from information broadcast by the ABS (anti-lock brake system) control module on the CAN (controller area network) . The display can show HDC functionality states with the HDC icon illuminated in a green or amber color. If HDC is not selected, no HDC icon is displayed. For

additional information refer to the Anti-Lock Control - Traction Control section.

AUTOMATIC TRANSMISSION

The automatic transmission current selected gear is received from a CAN (controller area network) transmission from the transmission control module. The display shows the current selector lever position of P, R, N, D, 1, 2, 3, 4, 5 or 6. The gear position is displayed in a central position above the transfer case range icon.

AIR SUSPENSION

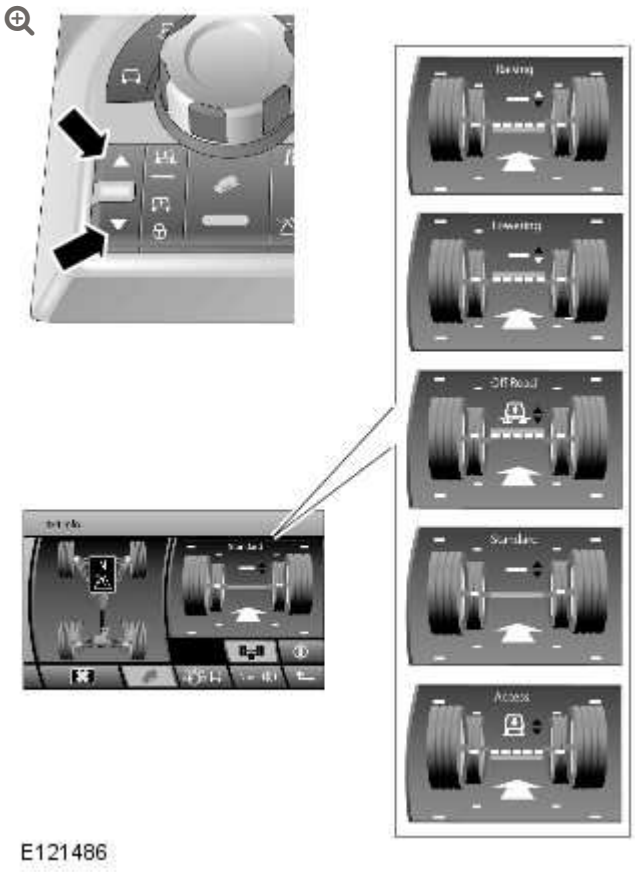

The air suspension status information is obtained from information broadcast on the CAN (controller area network) by the air suspension control module. The display comprises six different screen displays to show all air suspension height states and transition states. During a height change the arrow head between the wheels flashes. The green line denotes the suspension position above, below or at the

standard height setting. The selected height is confirmed by a symbol and text confirming the suspension status.

WHEEL HEIGHT

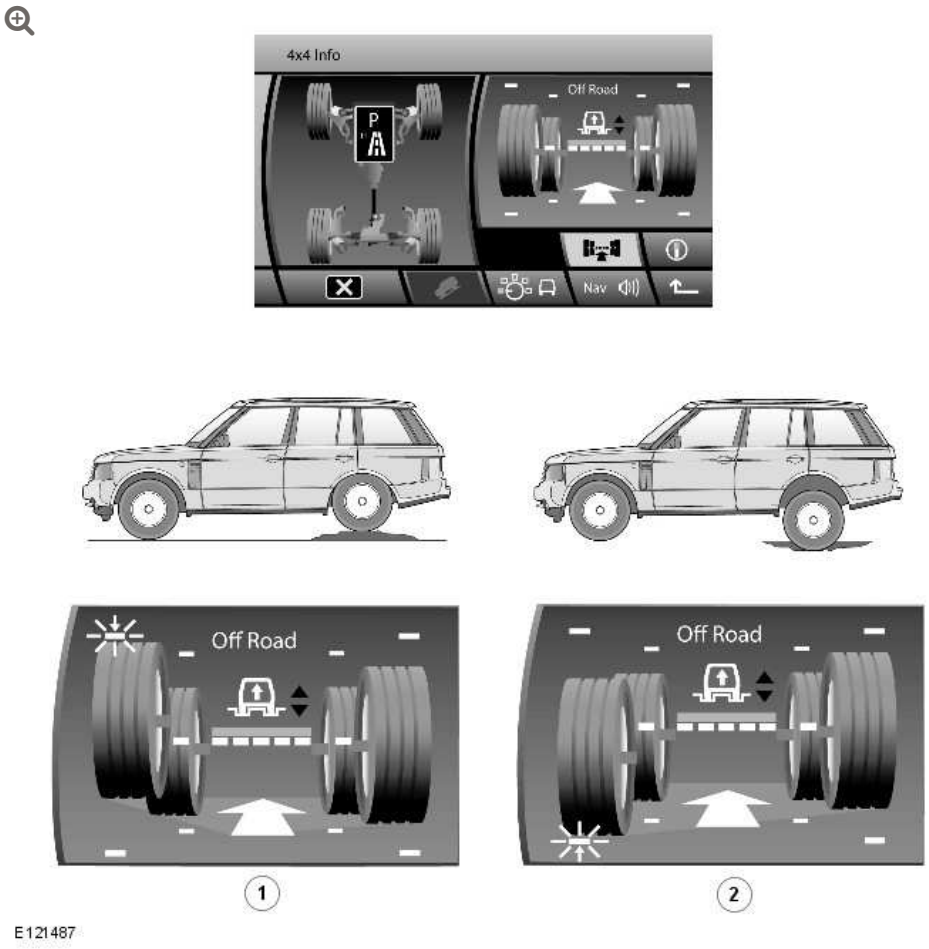

ITEM	DESCRIPTION
1	Maximum wheel travel upwards
2	Maximum wheel travel downwards

The wheel height status information is obtained from information broadcast on the CAN (controller area network) by the air suspension control module. The wheel heights are measured by the four individual height sensors and processed by the air suspension control module.

The position of each wheel relative to the vehicle body is displayed. Upper and lower wheel travel markers are shown as white lines

above and below each wheel. The positions of the wheel markers move according the air suspension height selected. When the suspension is at off-road height, the position of the travel markers move upwards to represent the 55 mm of vehicle body movement when in this mode. When the suspension is at access height, the position of the travel markers move downwards to represent the 50 mm of vehicle body movement when in this mode. When the suspension is in off-road or access height, the positions of the suspension and wheel travel markers are displayed as blue lines to show their relative positions in standard height mode.

When the maximum wheel travel is reached, the travel marker changes to an amber color and flashes for as long as the maximum travel condition exists.

COMPASS



E121485

The compass information is obtained from the navigation computer. The compass view is the same compass view which is also displayed when the navigation system is in off-road navigation mode. The compass view replaces the wheel and body height view in the TSD. Compass view can be accessed by pressing the compass icon on the TSD. Pressing the chassis icon reverts the display back to the chassis view.

The compass view shows a plan view of the vehicle on a compass face. Depending on the compass display mode set in the navigation

system, the compass can display a rotating vehicle view which moves to indicate the heading against the fixed compass points. If the heading up mode is selected in the navigation system, the vehicle view pointer will remain fixed vertically and the compass points will rotate to indicate the vehicle heading.

VENTURE CAM

For additional information refer to the Video system.

CELLULAR PHONE

BLUETOOTH MODULE (G1246683)

REMOVAL AND INSTALLATION

REMOVAL

1. Disconnect the battery ground cable.
   Refer to: Specifications (414-00, Specifications).

2. 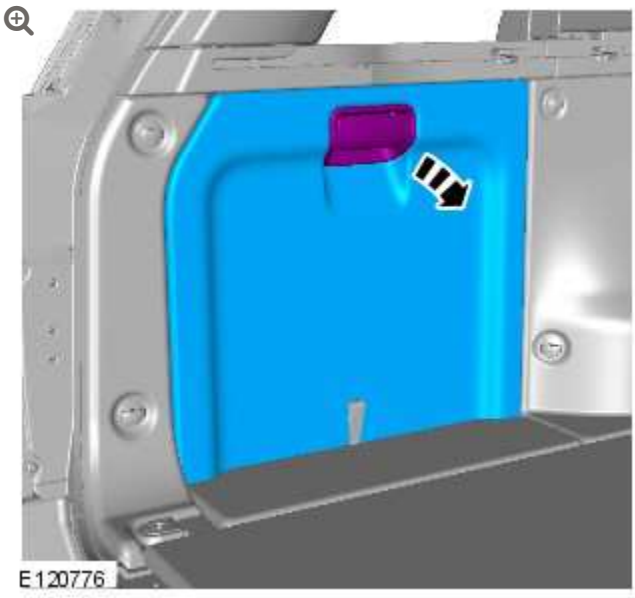

3.

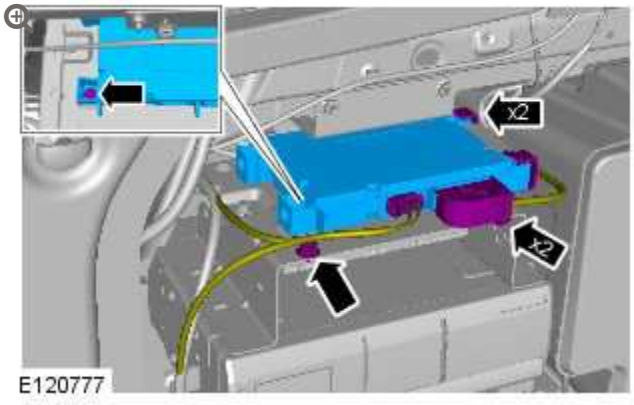

Torque: **6 Nm**

INSTALLATION

1. To install, reverse the removal procedure.

2012.0 RANGE ROVER (LM), 419-08

CELLULAR PHONE

DESCRIPTION AND OPERATION

TELEPHONE SYSTEM COMPONENT LOCATION

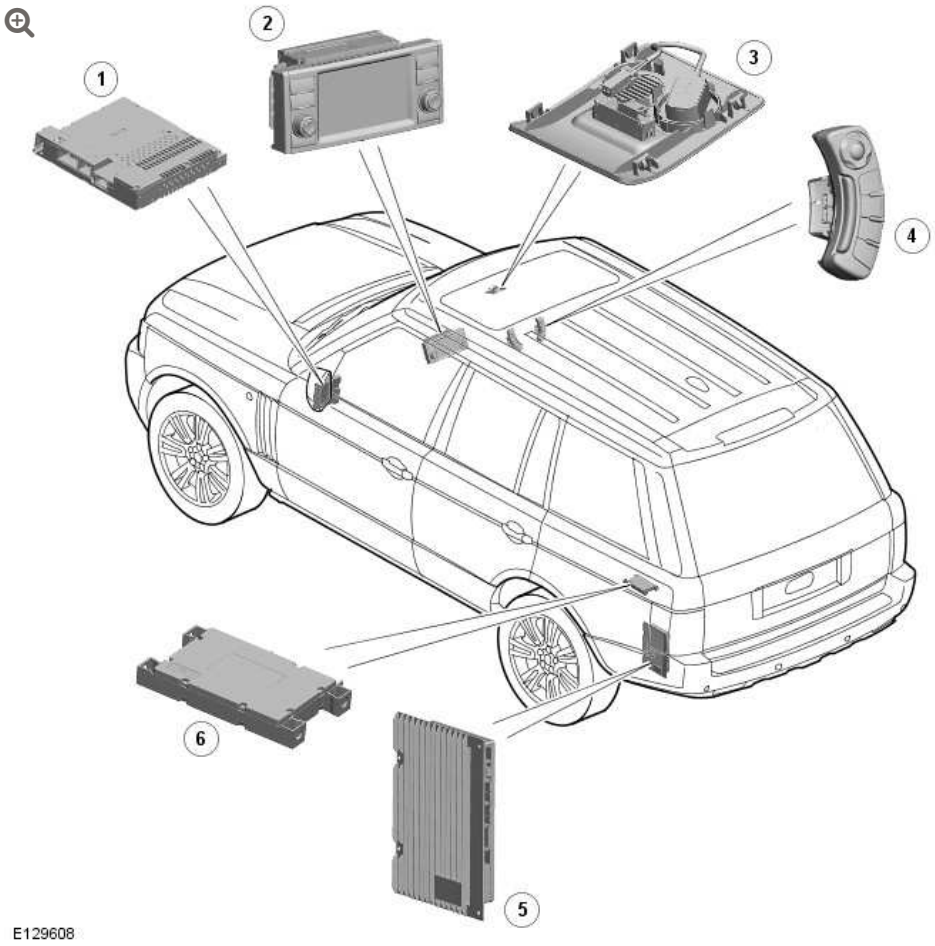

ITEM	DESCRIPTION
1	Integrated Head Unit (IHU)
2	Touch Screen Display (TSD)

ITEM	DESCRIPTION
3	Microphone
4	Steering wheel switches
5	Audio amplifier
6	Bluetooth phone module

GENERAL

The telephone system fitted to Range Rover uses the MOST ring for communication with the rest of the entertainment and information system. The system allows the driver to connect their own phone into the integrated phone system using Bluetooth® technology. Bluetooth® technology allowing hands free operation of a Bluetooth mobile phone.

The system comprises:

- Bluetooth phone module
- Touch Screen Display (TSD)
- Microphone
- Integrated Head Unit (IHU)
- Steering wheel controls
- Audio amplifier (for audio output)
- Navigation computer (for voice recognition if fitted).

Compatible Bluetooth® mobile telephones can communicate with the vehicle's in-built telephone system. Connection must be made with the ignition on or the engine running.

SYSTEM COMPONENTS

The following describes the components used in the telephone system.

BLUETOOTH® PHONE MODULE



The Bluetooth® phone module is located in the rear left-hand (LH) side of the luggage compartment, adjacent to the audio amplifier. The module is connected to the MOST ring and, as the interface between the telephone and the IHU, processes all instructions and audio from and to the phone. The module contains voice recognition hardware and software and is used for control of the voice activation system.

TOUCH SCREEN DISPLAY (TSD)

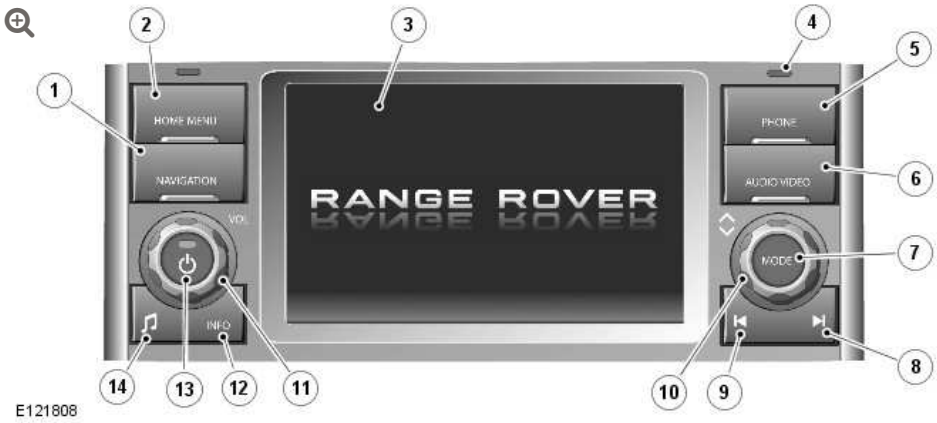

ITEM	DESCRIPTION
1	Navigation button
2	Home menu button

ITEM	DESCRIPTION
3	Touch screen display
4	Light sensor
5	Telephone button
6	Audio/Video button
7	Search up/increase button
8	Mode button
9	Search down/decrease button
10	Scroll up/down rotary control
11	Volume rotary control
12	Info button
13	Audio on/off button
14	Tone select button

The Touch Screen Display (TSD) forms the basis of the telephone system. It communicates with the rest of the audio/infotainment system on the MOST ring and allows control of the telephone system and other infotainment systems from a single point.

The TSD communicates with the Integrated Head Unit (IHU) on the MOST ring and provides the driver interface and driver display of the telephone system. The TSD also provides driver display and control of the audio, the rear view camera, the Venture Cam, the navigation system, the Traffic Message Channel and the rear seat entertainment.

The telephone system and other systems are operated by a combination of the physical buttons located on each side of the screen and the 'virtual' buttons displayed on the touch screen, in addition to the steering wheel mounted switches. For clarification, the physical buttons on the TSD are referred to as 'buttons' and the touch screen virtual buttons are referred to as 'icons'.

The dual-view TSD allows the front seat passenger to view television and video images when the car is being driven. The dual-view screen allows the driver to see the telephone or other system screens but not the TV or video when the vehicle is moving. The screen can be switched between single and dual view by pressing the audio/video button .

The TSD is mounted centrally in the instrument panel. The dual-view TSD enables the passenger and driver to view completely different images from their respective seating positions. This technology provides a solution for the legal issues attached to viewing moving images whilst the vehicle is in motion. It is not possible for the driver to view moving images with an active speed signal but the passenger can.

NOTE:

Due to legislation the NAS markets will not receive this option. A single view only display is available in these markets.

The dual-view TSD uses Parallax Barrier Shutter Technology to alternately hide and reveal columns of pixels to the left and right hand views of the screen. The display comes with a specially designed agar coating to help prevent sunlight bleaching.

MICROPHONE

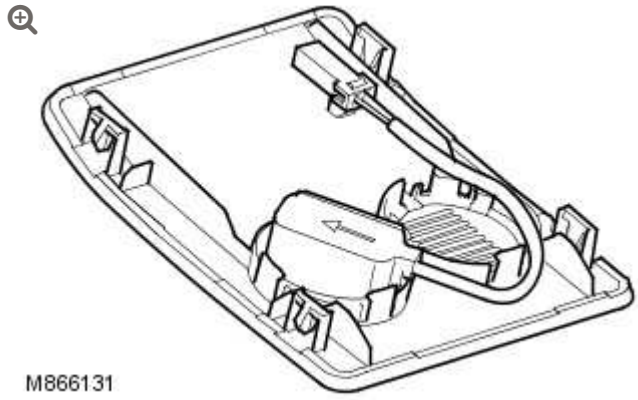

The microphone is located in the front interior lamp console. The standard, directional type microphone is connected to the Integrated Head Unit (IHU) for voice recognition of the telephone and the navigation system. The microphone has an integrated noise suppression system for hands-free telephone use.

INTEGRATED HEAD UNIT (IHU)

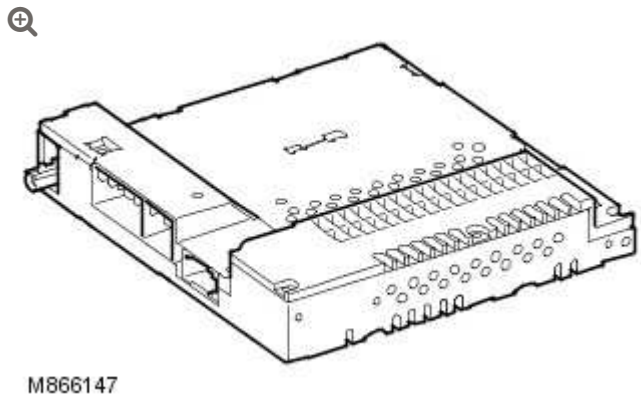

The Integrated Head Unit (IHU) is located behind the TSD in the center of the instrument panel. The IHU communicates with the Bluetooth® phone module on the MOST ring. The IHU contains the software for telephone functionality.

STEERING WHEEL CONTROL SWITCHES

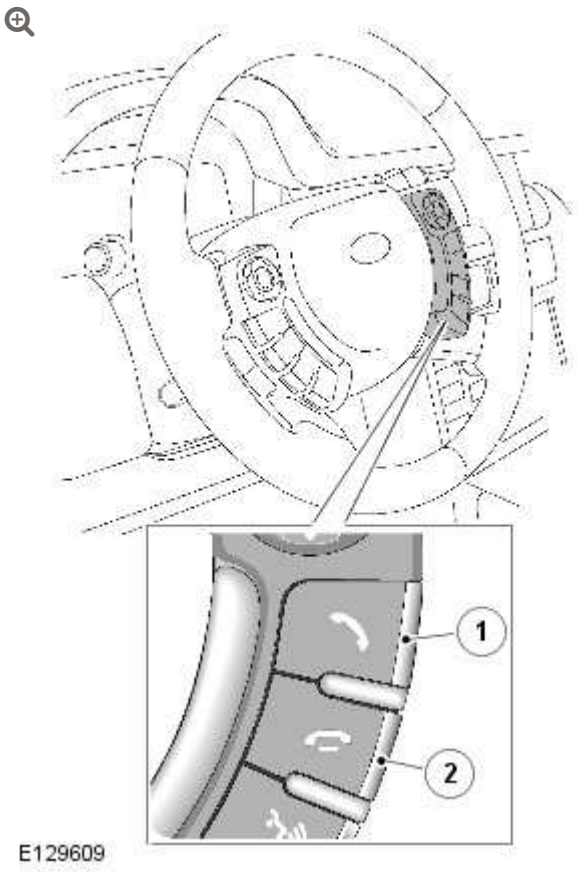

ITEM	DESCRIPTION
1	Answer call/dial switch
2	End/reject call switch

The steering wheel switches for the telephone system are located on the right-hand (RH) side of the steering wheel. The driver is able to use these switches for several phone related functions including:

- Accept incoming calls.
- Reject incoming calls.
- Make phone calls from the phones own phone book.
- Use the voice dialing feature of the telephone system.

AUDIO AMPLIFIER

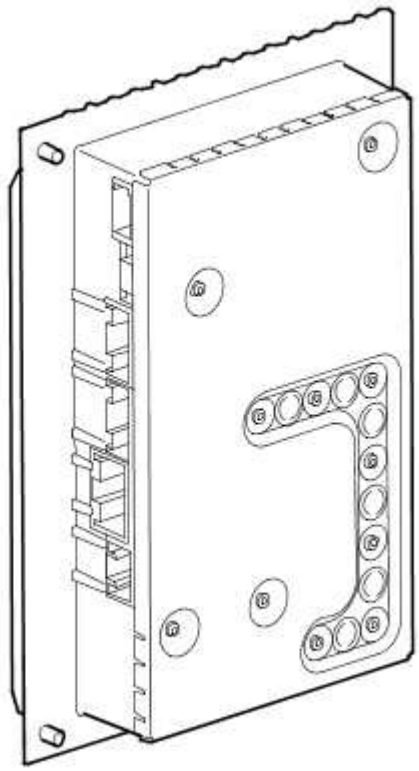

M866139

The amplifier (DSP or Logic7) is located in the rear LH side of the luggage compartment. The audio amplifier receives audio from the Bluetooth® phone module on the MOST ring, the audio is then processed and passed out to the speakers.

BLUETOOTH®

The Bluetooth® phone module allows the user to connect their own mobile phone handset (Bluetooth® enabled only) to the vehicle telephone system.

Once connected, the user can use the vehicle hands free functions. The Bluetooth® system limits the functions to those available in the Bluetooth® hands free profile.

The available features include:

- Make/receive call
- Voice calls using the phones own voice tags (where set up).
- Signal strength indication on the TSD (if supported by the telephone handset software)
- Phonebook download
- Missed calls
- Last number redial
- Calls list.

BLUETOOTH® PAIRING

Before a Bluetooth® phone handset can be used on the vehicle hands free system, the phone must be 'paired' to the Bluetooth® phone module. The following steps describe the 'pairing' process:

- On the handset, make sure that Bluetooth® is switched 'ON'.
- The user then initiates a search for other Bluetooth® devices from the handset.
- The Bluetooth® phone module acknowledges the existence of the Bluetooth® phone.
- On the handset, 'Land Rover' appears in the available device list.
- The user selects 'Land Rover' from the device list and the Bluetooth® phone module will attempt pairing.
- The Bluetooth® phone module requests a Personal Identification Number (PIN) from the handset.
- The user then enters the handset PIN 2121.
- If the PIN is correct, the phone handset will be paired with the Bluetooth® phone module and the handset details are stored in the module EEPROM. The module details are also stored in the phone handset.

When the pairing procedure is complete (assigning the phone handset to the vehicle) the phone handset will automatically connect to the vehicle system once they come into range (approximately 10 meters) and the ignition switch on or the engine is running. The term 'Bluetooth'® is displayed in the TSD to inform the driver that the phone handset is connected to the Bluetooth® phone module , if no network operator is displayed.

Up to five Bluetooth® equipped phone handsets can be paired with the Bluetooth® phone module. A phone handset can be de-registered/disconnected from the module at any time by the user. Only one phone handset can be used on the vehicle hands free system at any one time.

If the Bluetooth® phone module is replaced, each phone handset which was paired with the original module will require re-pairing with the replacement module.

VOICE RECOGNITION

The voice recognition system controls the following systems (where fitted):

- Telephone
- Notepad
- Navigation.

The voice recognition software is contained in the Touch Screen Display (TSD). The microphone is hardwired to the TSD for voice control and the IHU for telephone. The TSD will allow voice control of the telephone system, the Notepad and the navigation system. The TSD has limited language capability with German, French, Italian, Spanish, Dutch, USA and UK supported.

The voice recognition system enables the driver to activate functions of the system without operating controls manually. This allows the driver to concentrate on driving the vehicle, improving safety. When the driver speaks one of the defined voice commands, with the voice recognition system active, the voice recognition software converts the command into a control signal for the system.

The Notepad function allows the driver to record notes of up to 30 seconds in length.

VOICE CONTROL ACTIVATION

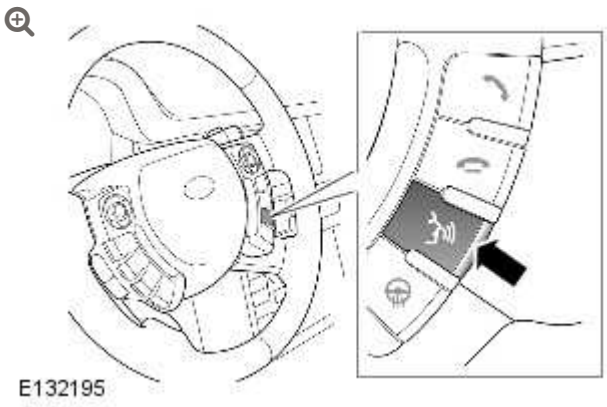

The voice control system is controlled and activated using the Voice button located on the RH (right-hand) steering wheel switch module. Press the switch once briefly to start a voice session and press and hold to cancel a voice session.

When a voice session is started, a tone will be emitted to indicate the system is waiting for a voice command from the driver.

Once a spoken command has been given, the system will repeat the command as understood by the system as confirmation. The command will be then be performed by the relevant system or the system will ask for further clarification of the command. Always wait until after the tone is heard before giving any further commands.

If a command is not understood by the system, it will respond with the response "Sorry". The driver then has two further attempts to

give the command. If the system still does not understand the command, the voice session is cancelled.

Briefly pressing the Voice button during a voice session will interrupt the audible feedback. Wait for the tone to sound before giving the next command.

A command can be cancelled by the driver giving the command "Cancel" or by pressing and holding the voice button.

A double tone indicates the voice session has been cancelled.

Refer to the Owners Handbook for details of command lists and voice control of the telephone, notepad and navigation systems.

TELEPHONE SYSTEM CONTROL DIAGRAM

NOTE:

A = Hardwired, **O** LIN bus; **P** = MOST

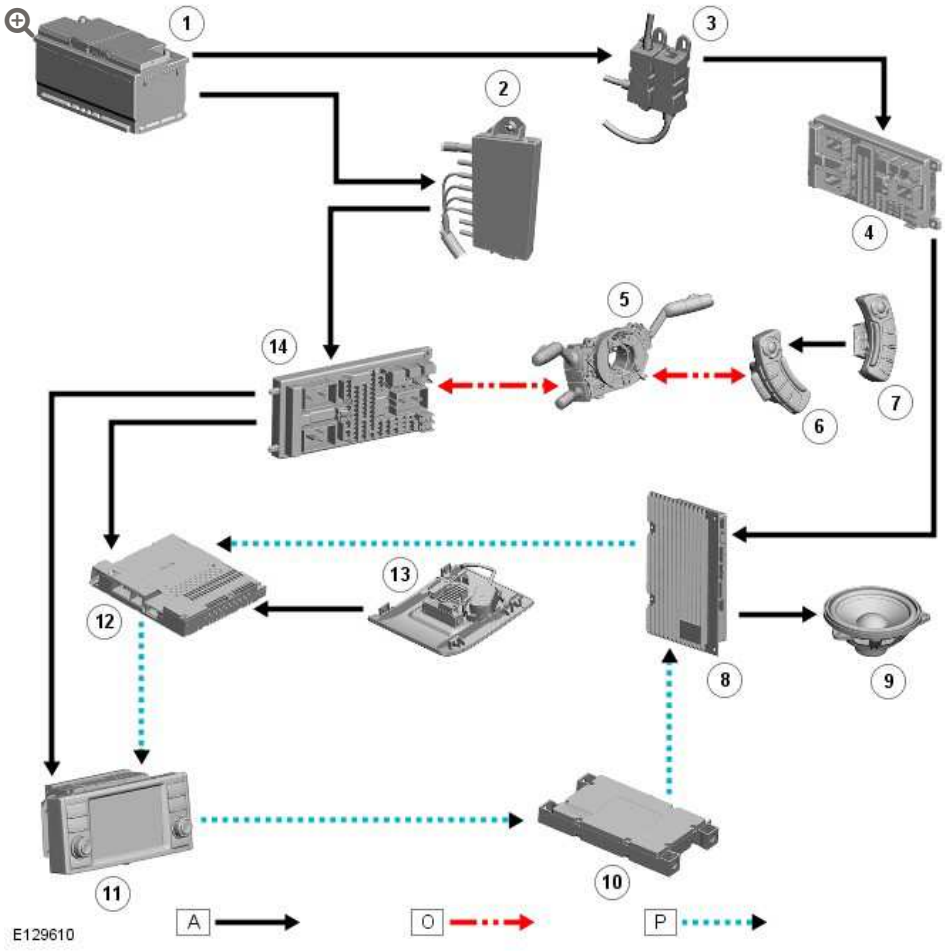

ITEM	DESCRIPTION
1	Battery
2	Battery Junction Box (BJB)
3	Battery Junction Box (BJB) 2
4	Rear Junction Box (RJB)
5	Clockspring
6	LH Steering wheel switches
7	RH steering wheel switches
8	Audio amplifier
9	Vehicle speakers
10	Bluetooth phone module
11	Touch Screen Display (TSD)
12	Integrated Audio Unit (IAU)

ITEM	DESCRIPTION
13	Microphone
14	Central Junction Box (CJB)

CELLULAR PHONE

MICROPHONE (G552927)

REMOVAL AND INSTALLATION

REMOVAL

1. Carefully release the overhead console center panel.
   - Release the 4 clips.

2.

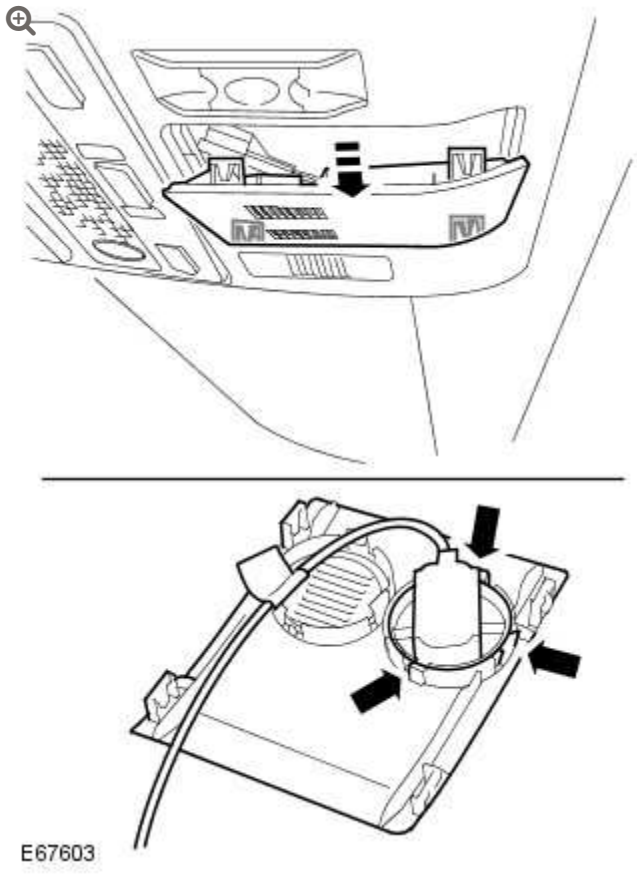

Remove the cellular phone microphone.

- Disconnect the electrical connector.
- Release the 3 clips.

INSTALLATION

1. Install the cellular phone microphone.
   - Secure in the clips.
   - Connect the electrical connector.
2. Install the overhead console center panel.

MULTIFUNCTION ELECTRONIC MODULES

INFORMATION AND ENTERTAINMENT MODULE

(G927023)

REMOVAL AND INSTALLATION

REMOVAL

1. Disconnect the battery ground cable.
   For additional information, refer to: Specifications (414-00, Specifications).
2. Remove the access panel from the loadspace trim panel LH.
3. Remove the loadspace trim panel, floor stowage compartment LH access cover.
4. Raise and support the spare tire loadspace trim panel.
5.

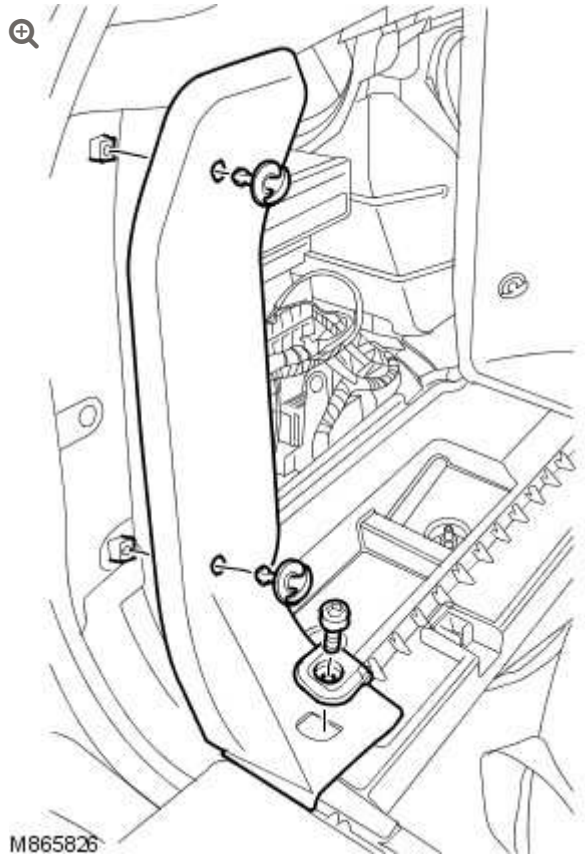

Remove the LH finisher trim panel.

- Remove the luggage tie down ring.
- Remove the 2 turn fasteners securing the LH finisher trim panel.

6. Remove the lower turn fastener, securing the front loadspace trim panel LH.

7. Remove the trim clip securing the front loadspace trim panel LH to the floor stowage compartment.

8.

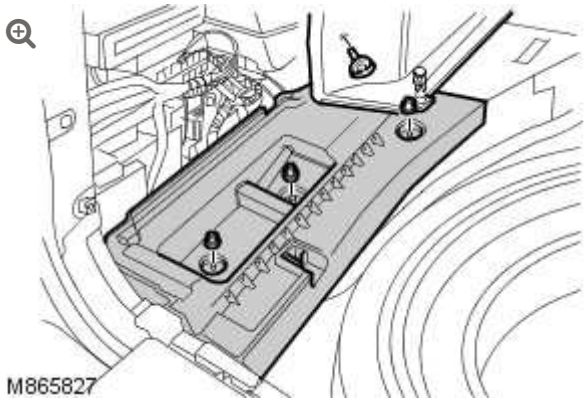

Remove the LH floor stowage compartment.

- Remove the 3 nuts.

9.

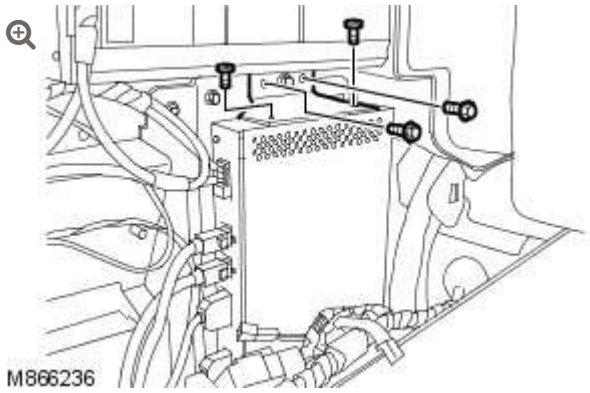

Remove the information and entertainment module upper bracket.

- Remove the 2 bolts.
- Remove the 2 screws.

10.

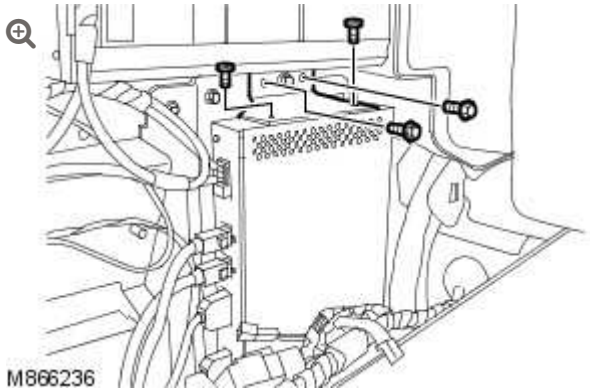

Release the information and entertainment module from its lower locating bracket.

11.

CAUTION:

Cover fiber optic cable connectors to minimize dust ingress and avoid bending the cables in a radius of less than 30 mm.

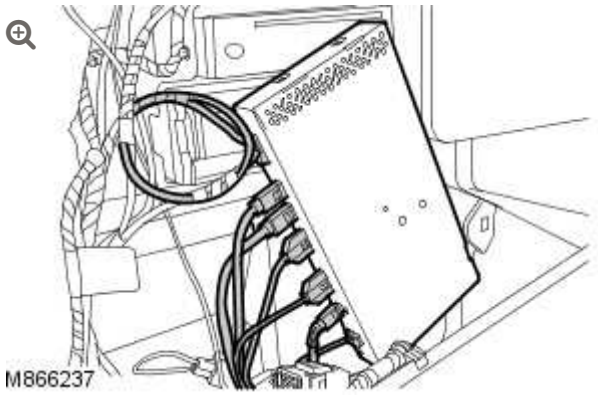

Remove the information and entertainment module.

- Disconnect the optical connector.
- Disconnect the 7 electrical connectors.

12.



Remove the information and entertainment module lower bracket.

- Remove the 2 screws.

INSTALLATION

1. Install the information and entertainment lower bracket.
   - Install the screws.
2. Install the information and entertainment module.
   - Connect the optical connector.
   - Connect the electrical connectors.
3. Install the information and entertainment module upper bracket.
   - Tighten the bolts to 10 Nm (7 lb.ft).
4. Install the LH floor stowage compartment.
   - Install the nuts.
5. Install the trim clip securing the front loadspace trim panel LH to the floor stowage compartment.
6.

Install the lower turn fastener, securing the front loadspace trim panel to the floor stowage compartment.

7. Install the LH finisher trim panel.
   - Install the turn fasteners.

8. Install the luggage tie down ring.
   - Tighten the bolt to 25 Nm (18 lb.ft).

9. Lower and secure the spare tire loadspace trim panel.

10. Install the loadspace trim panel, floor stowage compartment LH access cover.

11. Install the access panel to the loadspace trim panel LH.

12. Connect the battery ground cable.
    For additional information, refer to: Specifications (414-00, Specifications).

13. Using the Land Rover approved diagnostic system, follow the on-screen instructions and configure the information and entertainment module.

MULTIFUNCTION ELECTRONIC MODULES

DIAGNOSIS AND TESTING

DESCRIPTION AND OPERATION

For a detailed description of the Driver/Passenger Door modules and operation, refer to the relevant Description and Operation section in the workshop manual.
REFER to: Module Controlled Functions (419-10 Multifunction Electronic Modules, Description and Operation).

INSPECTION AND VERIFICATION

1. Verify the customer concern.

2. Visually inspect for obvious signs of electrical damage.

Visual Inspection

ELECTRICAL
▪ Fuse(s) ▪ Electrical connector(s) ▪ Wiring Harness

3.

If an obvious cause for an observed or reported concern is found, correct the cause (if possible) before proceeding to the next step.

4. If the cause is not visually evident, check for DTCs and refer to the DTC Index.

DTC INDEX

For a list of Diagnostic Trouble Codes (DTCs) that could be logged on this vehicle, please refer to Section 100-00. REFER to: Diagnostic Trouble Code (DTC) Index - DTC: Module Name: Driver/Passenger Door Module (100-00, Description and Operation).

MULTIFUNCTION ELECTRONIC MODULES

REAR ENTERTAINMENT CONTROL MODULE – ULTIMATE (G1451328)

REMOVAL AND INSTALLATION

REMOVAL

NOTE:

Removal steps in this procedure may contain installation details.

1. Refer to: Lower Glove Compartment (501-12, Removal and Installation).

2.

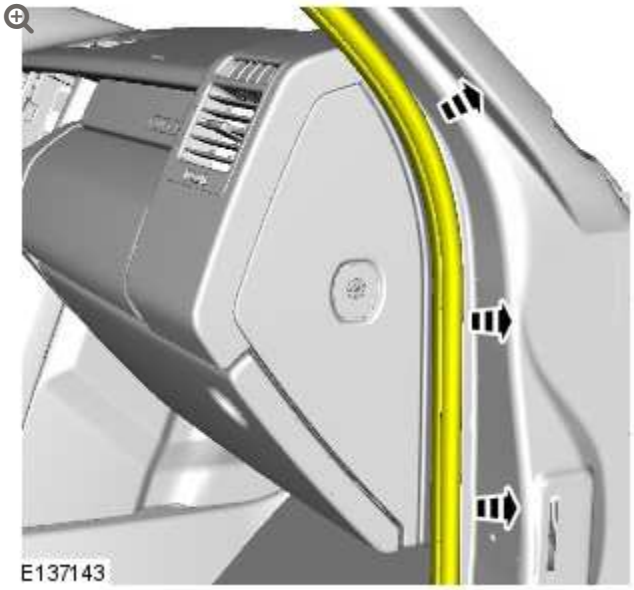

3.

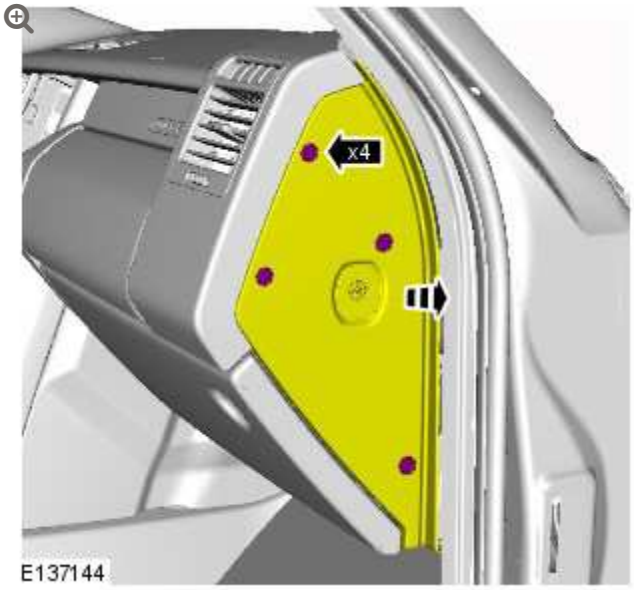

4.

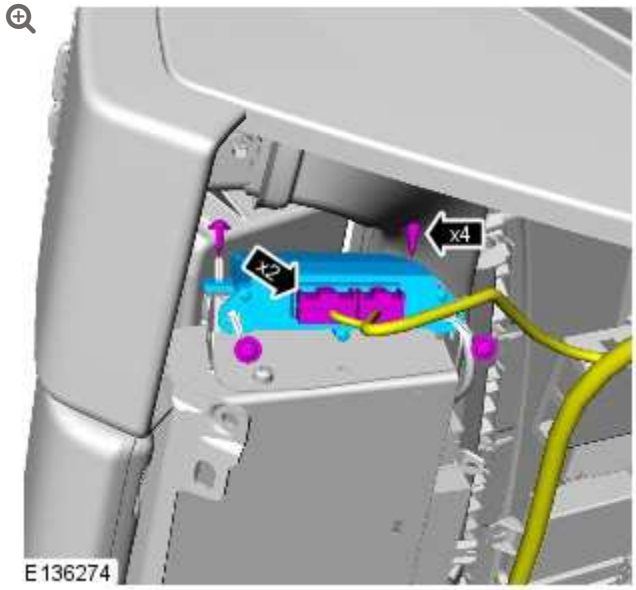

- *Torque:* **5 Nm**

INSTALLATION

1. To install, reverse the removal procedure.

BODY SYSTEM – GENERAL INFORMATION

SPECIFICATIONS

Torque Specifications

DESCRIPTION	NM	LB-FT
Tailgate latch bolts	25	18
Tailgate catch bolts	25	18
Liftgate latch bolts	10	7
Liftgate catch bolts	10	7
Front door window glass bolts	10	7
Front door window regulator upper bolts	10	7
Front door window regulator lower bolts +	10	7
Rear door window regulator upper bolts	10	7
Rear door window regulator lower bolts +	10	7
Door latch screws	10	7
Rear spoiler bolts	10	7
Front bumper:		
Nuts	45	33
bolts	10	7
Door mirror assembly to door screws	9	7
Door mirror motor screws	1.4	1

DESCRIPTION	NM	LB-FT
A pillar trim panel screw	2	1.5
In vehicle cross beam to bulkhead nuts and bolts	25	18
Center in vehicle cross beam support bracket bolts	25	18
Floor console support bracket bolts	10	7
Automatic transmission selector nuts	25	18
Headliner to roof opening panel screws	3	2
Front seat bolts	45	33
Rear seat bolts	25	18
Seat belt anchor to seat bolt	48	35
Roof opening panel motor		
Torx screws	5	3.7
Allen screw	10	7
+ New bolts must be installed		

2012.0 RANGE ROVER (LM), 501-00

BODY SYSTEM – GENERAL INFORMATION

DESCRIPTION AND OPERATION

FRONT END SHEET METAL REPAIRS

Front End Sheet Metal Parts

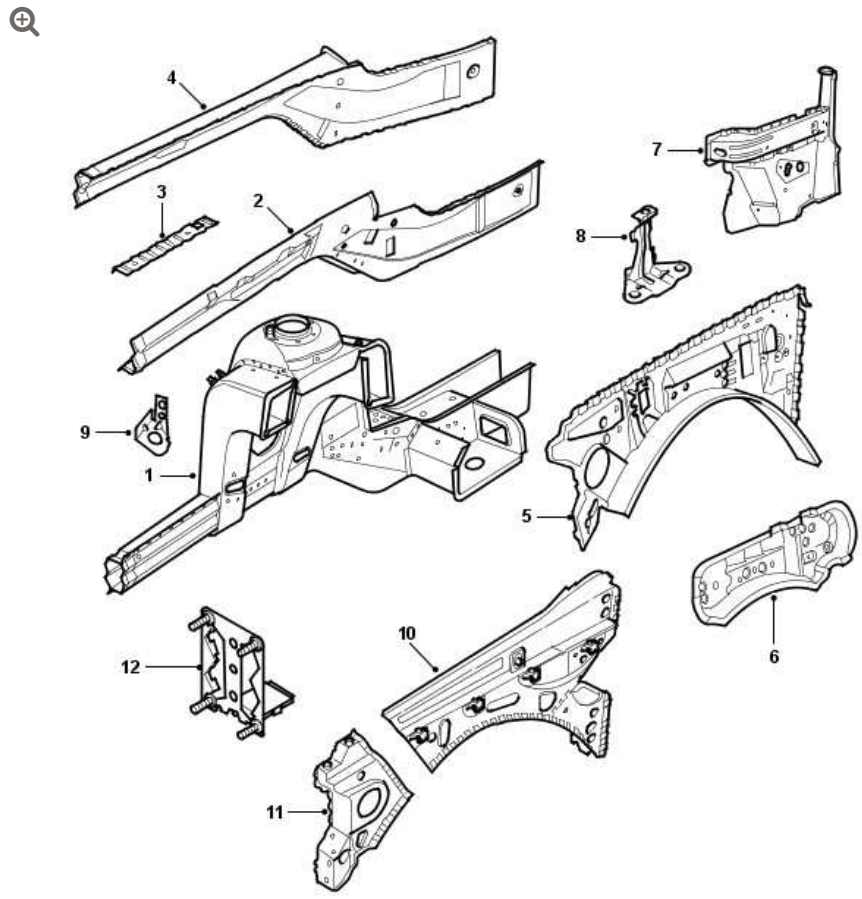

ITEM	DESCRIPTION
1	Front side member and suspension top mount assembly
2	Front side member extension - inner
3	Side member deformation element
4	Front side member extension - outer
5	Fender apron panel reinforcement rear section
6	Fender apron panel closing panel
7	Fender apron panel inner reinforcement
8	Brake hose bracket
9	Brake pipe support bracket
10	Fender apron panel
11	Fender apron panel extension
12	Front bumper mounting

The following links below will provide additional information on the indicated subject.

For additional information, refer to: Front Side Member and Suspension Top Mount Assembly (501-27 Front End Sheet Metal Repairs, Removal and Installation).

For additional information, refer to: Front Side Member Extension (501-27 Front End Sheet Metal Repairs, Removal and Installation).

For additional information, refer to: Fender Apron Panel Reinforcement Rear Section (501-27 Front End Sheet Metal Repairs, Removal and Installation).

For additional information, refer to: Fender Apron Panel Closing Panel (501-27 Front End Sheet Metal Repairs, Removal and Installation).

For additional information, refer to: Fender Apron Panel Inner Reinforcement (501-27 Front End Sheet Metal Repairs, Removal and Installation).

Front End Serviceable Parts

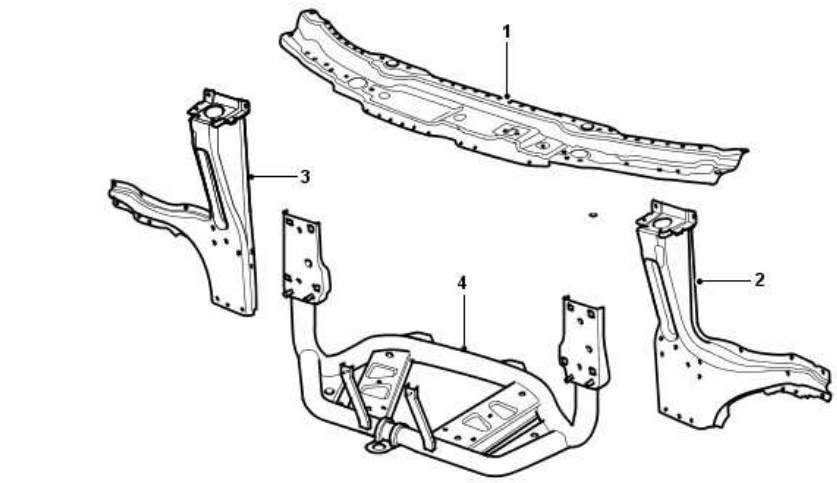

ITEM	DESCRIPTION
1	Hood latch panel
2	Headlamp mounting bracket - LH
3	Headlamp mounting bracket - RH
4	Auxiliary front crossmember

The following links below will provide additional information on the indicated subject.

For additional information, refer to: Hood Latch Panel (501-27 Front End Sheet Metal Repairs, Removal and Installation).

For additional information, refer to: Auxiliary Front Crossmember (501-27 Front End Sheet Metal Repairs, Removal and Installation).

TIME SCHEDULES – FRONT END SHEET METAL REPAIRS

The following information shows the total time taken to replace single panels and complete assemblies. This time includes removal of Mechanical, Electrical and Trim (MET) items, plus paint times based on Metallic Clear Over Base Paint.

The times shown were generated by Thatcham (the motor insurance repair and research center) and are to be used as a guide only.

Single Panel Times

PANEL DESCRIPTION	TOTAL TIME
Hood	7.7
Hood latch panel	1.5
Headlamp mounting bracket - LH	1.9
Headlamp mounting bracket - RH	2.0
Fender	7.0

COMBINATION PANEL REPLACEMENT TIMES

The following combination times show the total time to remove and refit body panels, MET items and any paint process.

Front End Sheet Metal Repairs - Combination Panel Times

PANEL DESCRIPTION	TOTAL TIME
Hood latch panel	
Front bumper cover	
Headlamp mounting bracket	
Fender	
Total Time	**11.6**

Front End Sheet Metal Repairs - Combination Panel Times

PANEL DESCRIPTION	TOTAL TIME

PANEL DESCRIPTION	TOTAL TIME
Hood latch panel	
Front bumper cover	
Headlamp mounting brackets - LH and RH	
Total Time	**14.4**

Front End Sheet Metal Repairs - Combination Panel Times

PANEL DESCRIPTION	TOTAL TIME
Hood latch panel	
Front bumper cover	
Front bumper	
Front side member closing panel	
Front side member front extension	
Auxiliary front crossmember	
Headlamp mounting bracket - LH and RH	
Fender	
Fender apron panel extension	
Fender apron panel reinforcement	
Total Time	**29.9**

Front End Sheet Metal Repairs - Combination Panel Times

PANEL DESCRIPTION	TOTAL TIME
Hood latch panel	
Front bumper cover	
Front bumper	
Front side member closing panel - LH and RH	
Front side member front extension - LH and RH	

PANEL DESCRIPTION	TOTAL TIME
Auxiliary front crossmember	
Headlamp mounting bracket - LH and RH	
Fender - LH and RH	
Fender apron panel extension - LH and RH	
Fender apron panel reinforcement - LH and RH	
Total Time	**41.3**

Front End Sheet Metal Repairs - Combination Panel Times

PANEL DESCRIPTION	TOTAL TIME
Hood latch panel	
Front bumper cover	
Front bumper	
Front side member closing panel	
Front side member front extension	
Auxiliary front crossmember	
Fender - LH and RH	
Headlamp mounting brackets - LH and RH	
Total Time	**19.3 LH / 19.2 RH**

Front End Sheet Metal Repairs - Combination Panel Times

PANEL DESCRIPTION	TOTAL TIME
Fender apron panel reinforcement	
Fender apron reinforcement panel rear section	
Fender	
Headlamp mounting bracket - LH and RH	
Auxiliary front crossmember	

PANEL DESCRIPTION	TOTAL TIME
Front side member and suspension top mount assembly	
Front crossmember	
Front side member front extension	
Front bumper	
Front bumper cover	
Hood latch panel	
Total Time	**50.1 LH / 49.2 RH**

SIDE PANEL SHEET METAL REPAIRS

Side Panel Sheet Metal Parts

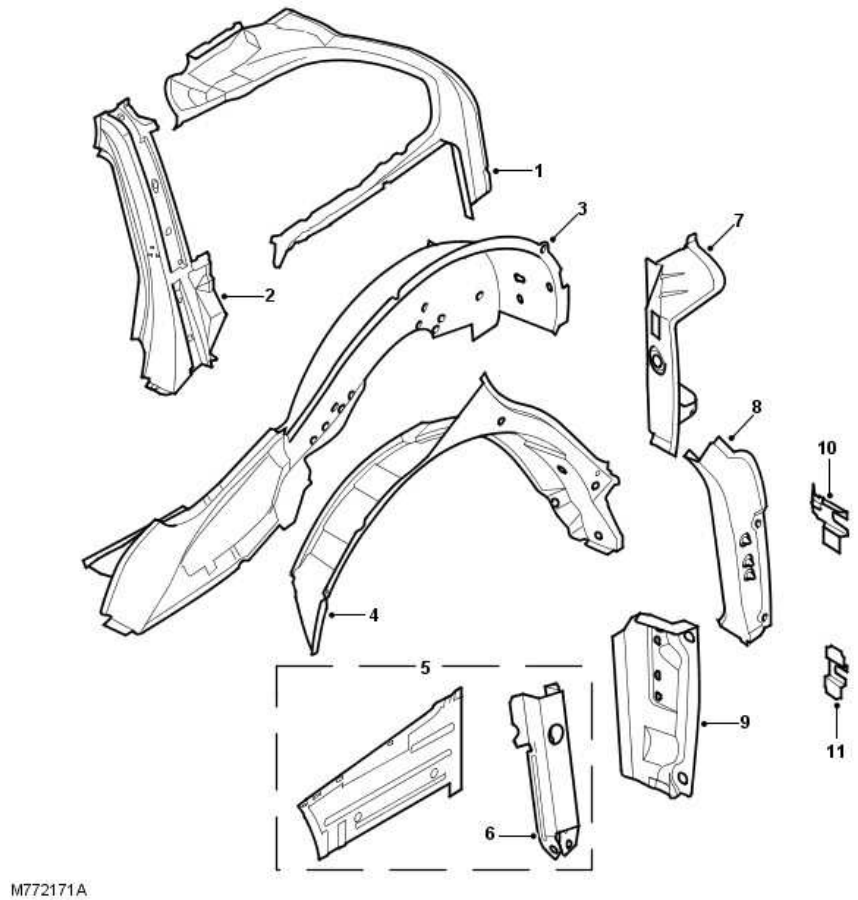

ITEM	DESCRIPTION

ITEM	DESCRIPTION
1	Rear inner quarter panel
2	D-pillar closing panel
3	Rear wheelhouse outer
4	Rear inner wheelhouse half
5	Rear quarter panel lower extension
6	Rear quarter panel lower extension
7	Rear lamp mounting panel
8	Rear lamp mounting panel
9	Rear lamp mounting panel - inner
10	Rear lamp mounting panel - upper
11	Rear lamp mounting panel - lower

Front and Rear Door Assemblies

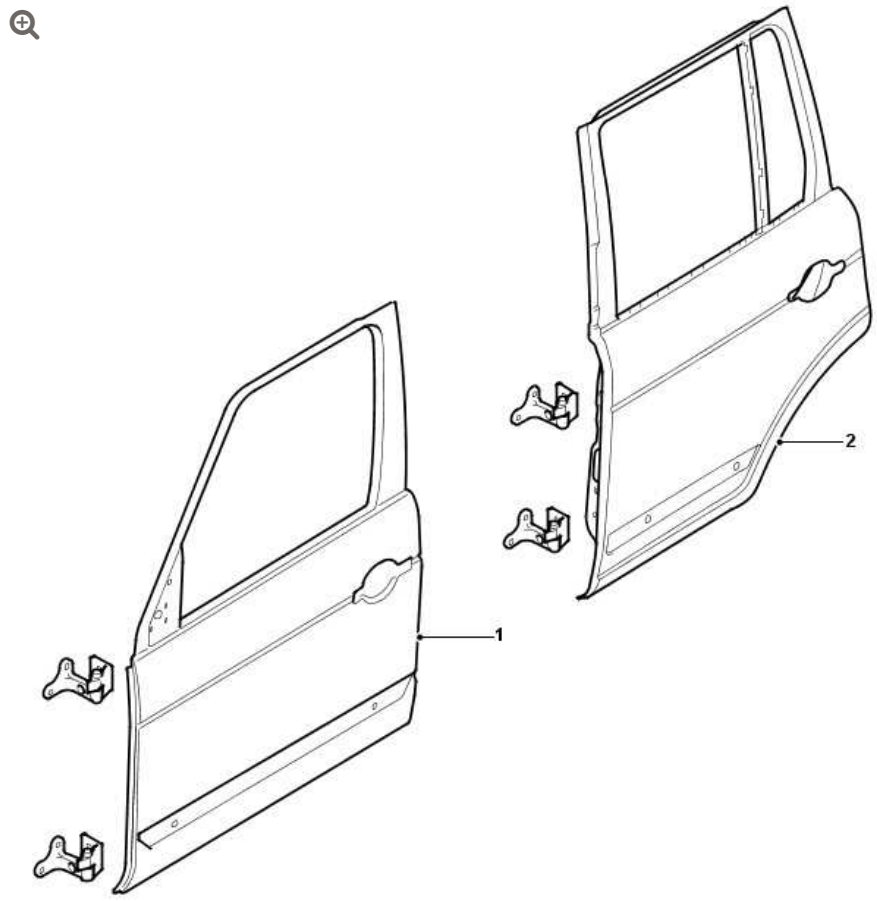

M772169B

ITEM	DESCRIPTION
1	Front door
2	Rear door

The doors are serviced as complete assemblies only. Door skins are not available as a serviceable part.

Side Panel Sheet Metal Assemblies

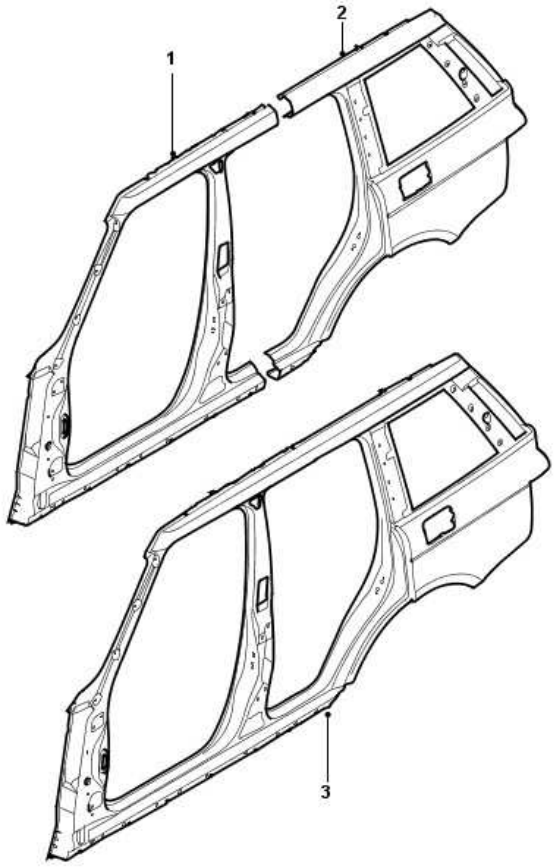

M772165A

ITEM	DESCRIPTION
1	Side panel front section
2	Rear quarter panel
3	Side panel

Side Panel - Inner

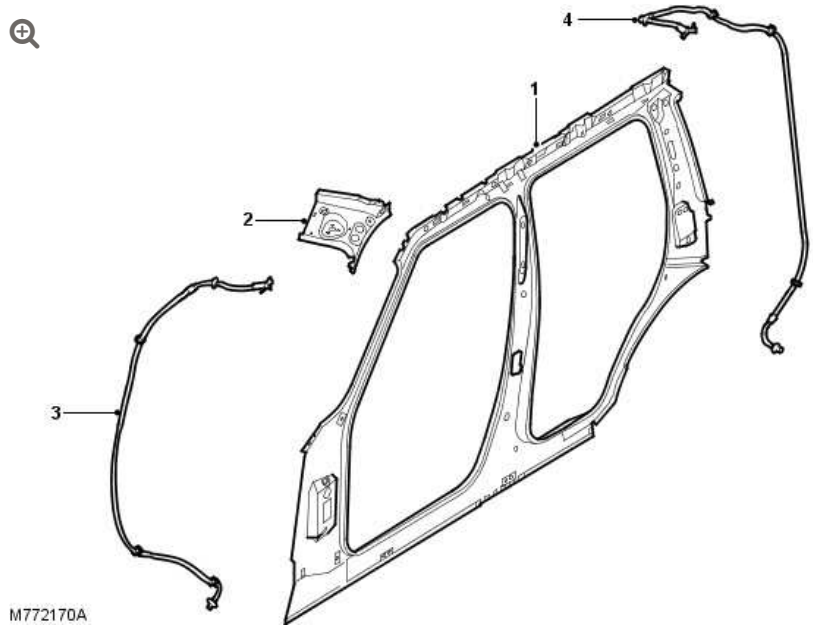

ITEM	DESCRIPTION
1	Side panel - inner
2	Side panel extension
3	Roof opening panel - front drain tube
4	Roof opening panel - rear drain tube

Roof Opening Panel - Drain Tube Clip Location

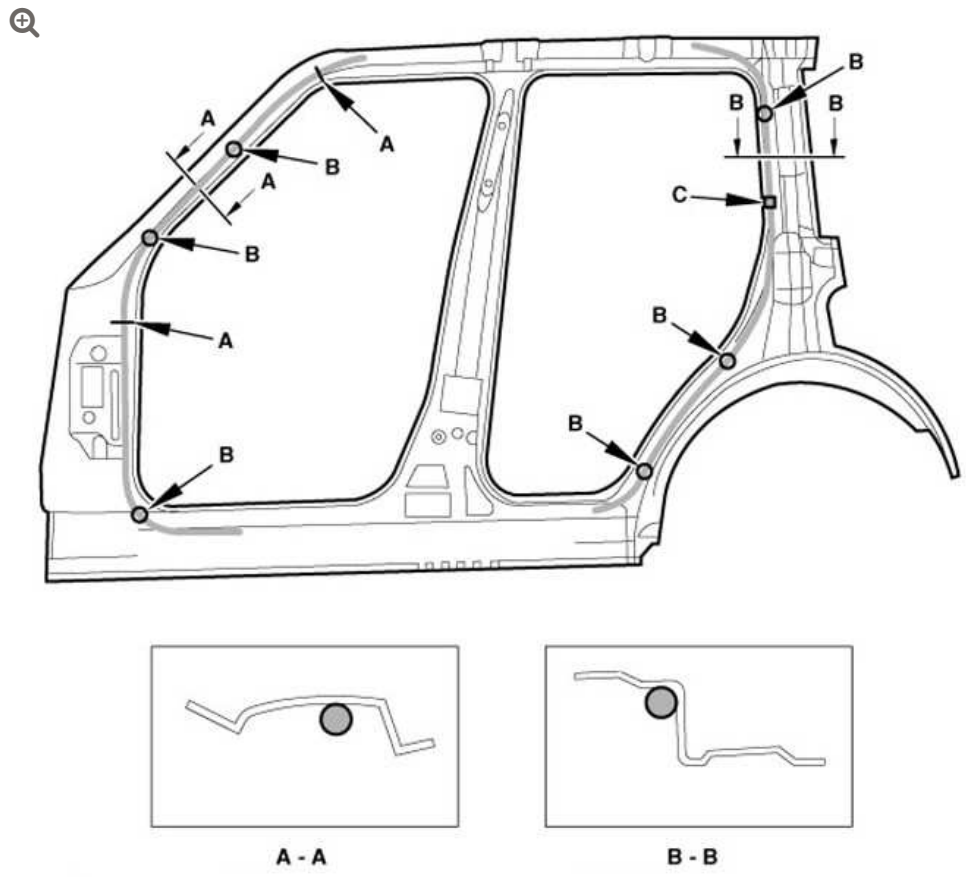

E84515

ITEM	DESCRIPTION
A	Metal clip, welded to the panel
B	Plastic clip
C	Expanding foam block, clipped to the panel

Section A-A and B-B show the approximate position of each drain tube in the side panel - inner.

The letters A, B and C highlight the position and type of clips used to hold the roof opening panel drain tubes in place.

The following links below will provide additional information on the indicated subject.

For additional information, refer to: A-Pillar Assembly (501-29 Side Panel Sheet Metal Repairs, Removal and Installation).

For additional information, refer to: A-Pillar Reinforcement (501-29 Side Panel Sheet Metal Repairs, Removal and Installation).

For additional information, refer to: B and C-Pillar Assembly (501-29 Side Panel Sheet Metal Repairs, Removal and Installation).

For additional information, refer to: Rocker Panel (501-29 Side Panel Sheet Metal Repairs, Removal and Installation).

For additional information, refer to: Rocker Panel Inner Reinforcement (501-29 Side Panel Sheet Metal Repairs, Removal and Installation).

For additional information, refer to: Rocker Panel Section (501-29 Side Panel Sheet Metal Repairs, Removal and Installation).

TIME SCHEDULES – SIDE PANEL SHEET METAL REPAIRS

The following information shows the total time taken to replace single panels and complete assemblies.

These times include the removal of mechanical, electrical and trim (MET) items, plus paint times based on metallic clear over base paint.

The times shown were generated by Thatcham (motor insurance repair and research center) and are to be used as a guide only.

Single Panel Times

PANEL DESCRIPTION	TOTAL TIME
Front door	8.6
Rear door	8.4
Rocker panel - LH	20.7
Rocker panel - RH	21.3
Rocker panel section - LH	23.5
Rocker panel section - RH	24.3

PANEL DESCRIPTION	TOTAL TIME
Rear quarter panel - LH	26.0
Rear quarter panel - RH	28.0

COMBINATION PANEL REPLACEMENT TIMES

The following combination panel times show the total time to remove and refit body panels, MET items and any paint process.

Side Panel Sheet Metal Repairs - Combination Panel Times

PANEL DESCRIPTION	TOTAL TIME
Front door	
Fender	**11.7**

Side Panel Sheet Metal Repairs - Combination Panel Times

PANEL DESCRIPTION	TOTAL TIME
Rear door	
Rear quarter panel	
Total Time	**29.3 LH / 31.4 RH**

Side Panel Sheet Metal Repairs - Combination Panel Times

PANEL DESCRIPTION	TOTAL TIME
B and C-pillar assembly	
Front door	
Rear door	
Rocker panel section	
Total Time	**34.5 LH / 35.3 RH**

Side Panel Sheet Metal Repairs - Combination Panel Times

PANEL DESCRIPTION	TOTAL TIME
Front door	
Rear door	
Side panel	
Fender	
Total Time	**51.3 LH / 53.0 RH**

Side Panel Sheet Metal Repairs - Combination Panel Times

TOTAL TIME	TOTAL TIME
Front door	
A-pillar assembly	
A-pillar reinforcement	
Instrument panel (for remove and install)	
Windshield	
Fender	
Fender apron panel	
Total Time	**40.0 LH / 39.6 RH**

REAR END SHEET METAL REPAIRS

Rear End Sheet Metal Parts

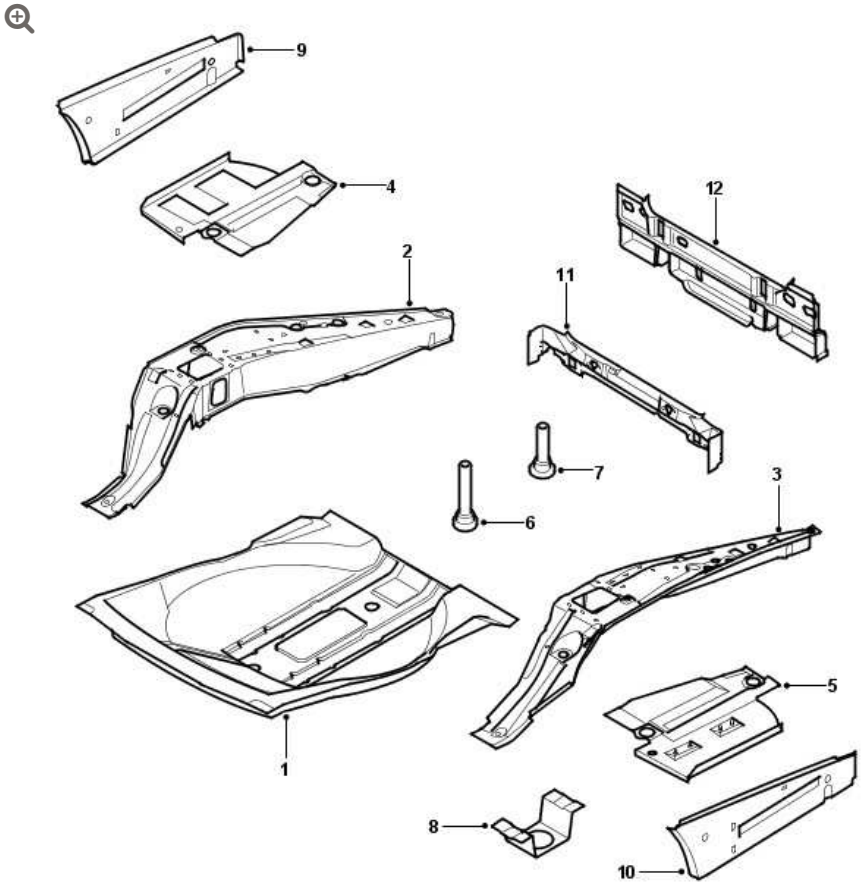

M772172A

ITEM	DESCRIPTION
1	Spare wheel well
2	Rear side member - RH
3	Rear side member - LH
4	Rear floor panel section - RH
5	Rear floor panel section - LH
6	Rear subframe front mounting point
7	Rear subframe rear mounting point
8	Spare tire mounting bracket
9	Rear side member closing panel RH
10	Rear side member closing panel LH
11	Rear crossmember
12	Rear crossmember section

ITEM	DESCRIPTION

The following links below will provide additional information on the indicated subject.

For additional information, refer to: Spare Wheel Well (501-30 Rear End Sheet Metal Repairs, Removal and Installation).

For additional information, refer to: Rear Side Member (501-30 Rear End Sheet Metal Repairs, Removal and Installation).

For additional information, refer to: Rear Floor Panel Section (501-30 Rear End Sheet Metal Repairs, Removal and Installation).

For additional information, refer to: Rear Crossmember (501-30 Rear End Sheet Metal Repairs, Removal and Installation).

For additional information, refer to: Rear Crossmember Section (501-30 Rear End Sheet Metal Repairs, Removal and Installation).

Liftgate and Tailgate Assemblies

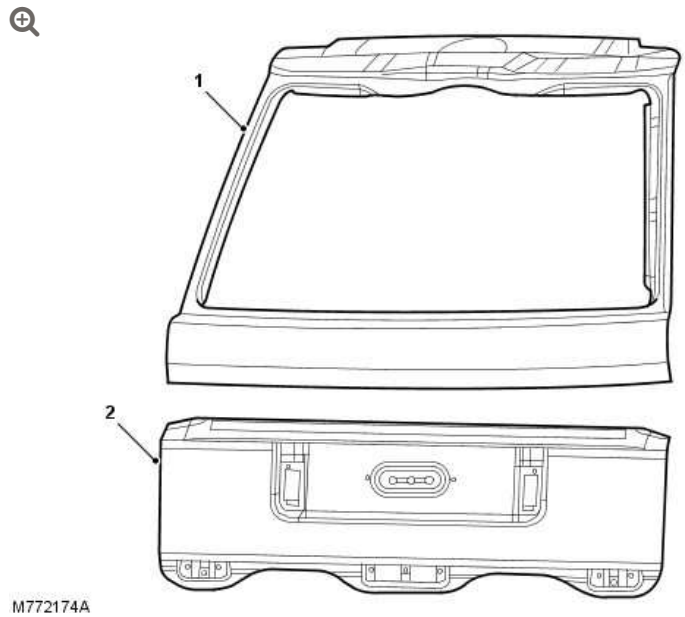

ITEM	DESCRIPTION
1	Liftgate assembly

ITEM	DESCRIPTION
2	Tailgate assembly

TIME SCHEDULES – REAR END SHEET METAL REPAIRS

The times shown were generated by Thatcham (the motor insurance repair and research center) and are to be used as a guide only.

Single Panel Times

PANEL DESCRIPTION	TOTAL TIME
Liftgate assembly	8.6
Tailgate assembly	6.9
Rear crossmember	14.0
Roof panel	21.6

COMBINATION PANEL REPLACEMENT TIMES

The following combination times show the total time to remove and refit body panels, MET items and any paint process.

Rear End Sheet Metal Repairs - Combination Panel Times

PANEL DESCRIPTION	TOTAL TIME
Rear bumper	
Rear crossmember	
Rear crossmember section	
Rear quarter panel	
Total Time	**36.7 LH / 38.8 RH**

Rear End Sheet Metal Repairs - Combination Panel Times

PANEL DESCRIPTION	TOTAL TIME
Rear bumper	

PANEL DESCRIPTION	TOTAL TIME
Rear crossmember	
Rear crossmember section	
Rear quarter panel LH and RH	
Total Time	**56.3**

Rear End Sheet Metal Repairs - Combination Panel Times

PANEL DESCRIPTION	TOTAL TIME
Rear bumper	
Rear quarter panel	
Spare wheel well	
Rear side member section	
Rear crossmember section	
Rear crossmember	
Rear floor panel section	
Front fender	
Rear wheelhouse reinforcement - upper	
Rear inner quarter panel	
Total Time	**54.1 LH / 55.4 RH**

Rear End Sheet Metal Repairs - Combination Panel Times

PANEL DESCRIPTION	TOTAL TIME
Rear bumper	
Rear quarter panel LH and RH	
Spare wheel well	
Rear side member section LH and RH	
Rear crossmember section	

PANEL DESCRIPTION	TOTAL TIME
Rear crossmember	
Rear floor panel section LH and RH	
Rear wheelhouse reinforcement - upper LH and RH	
Rear inner quarter panel LH and RH	
Total Time	**81.3**

ROOF SHEET METAL REPAIRS

Roof Panel Assemblies

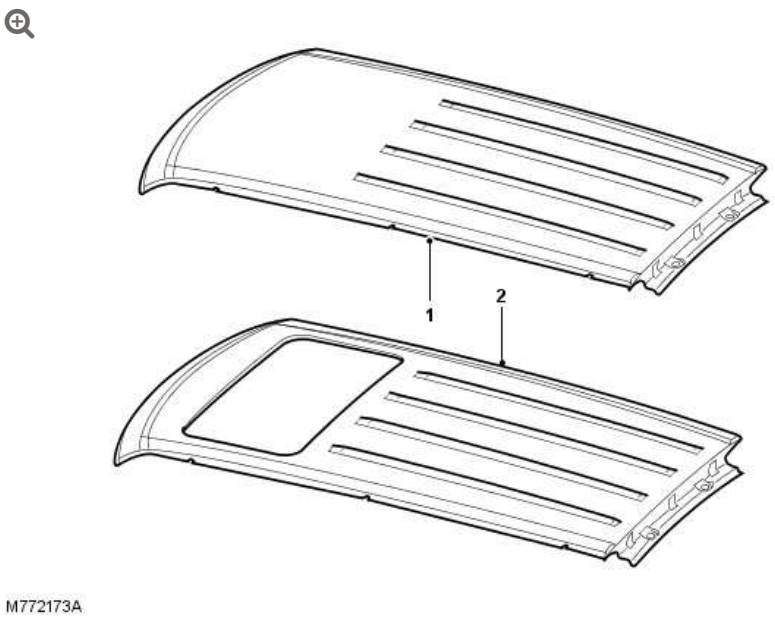

ITEM	DESCRIPTION
1	Roof panel - fixed roof panel
2	Roof panel - roof opening panel

The following link below will provide additional information on the indicated subject.

For additional information, refer to: Roof Panel (501-28 Roof Sheet Metal Repairs, Removal and Installation).

TIME SCHEDULES – REAR END SHEET METAL REPAIRS

The times shown were generated by Thatcham (the motor insurance repair and research center) and are to be used as a guide only.

Single Panel Times

PANEL DESCRIPTION	TOTAL TIME
Roof panel	21.6

GENERAL WELDING PRECAUTIONS

For ease of reference, the illustrations on the following pages show only the type of weld used in the repair where it varies from that used in production.

The replacement welds in the welding illustrations are denoted by the following symbols:

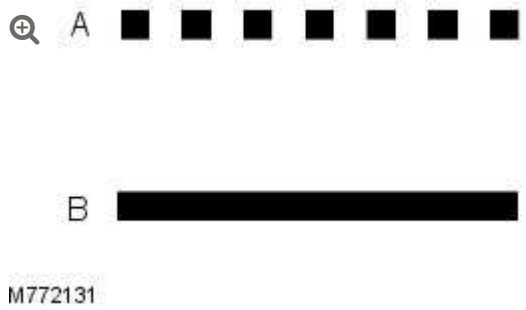

REPLACEMENT WELDS

Graphic Legend

1. Single/Multiple thickness plug welds.
2. MIG seam weld.

WELDING OBSERVATIONS

When carrying out welding operations the following criteria must be observed.

Recommendations

- Where resistance spot welds have been used in production, these must be reproduced with new spot welds in replacement where possible. All such reproduction spot welds must be spaced 30 mm (1.181 inches) apart.
- When spot welding, it is recommended that test coupons of the same metal gauges and materials are produced to carry out peel tests to make sure that welding equipment being used can produce a satisfactory joint. Plug welds must be used if a satisfactory spot weld can not be produced.
- The electrode arms on hand-held spot welding guns must not exceed 300 mm (11.811 inches) in length.
- Single-side spot welding is not acceptable.
- Brazing and gas welding are not acceptable EXCEPT where they have been specified in production.
- Where 3 metal thicknesses or more are to be welded together, it is imperative to use MIG plug welds to make sure joint strength is to the required weld quality.
- MIG plug welds must be used in repair joints where no access for a resistance spot welder. To replace each production spot weld, an 8 mm (0.314 inch) approximate hole must be drilled and/or punched, and a MIG plug weld then made in its place. The number of plug welds must match exactly the number of spot welds which have been removed.
- Where holes are left in an existing panel after removal of the spot welds, a single MIG plug weld will be made in each holes as appropriate.

ELECTRONIC CONTROL MODULES

The electronic control modules fitted to vehicles make it advisable to follow suitable precautions prior to carrying out welding repair

operations. Harsh conditions of heat and vibration may be generated during these operations which could cause damage to the units.

In particular, it is essential to follow the appropriate precautions when disconnecting or removing the air bag diagnostic monitor.

EQUIPMENT

Prior to commencing any test procedure on the vehicle, make sure that the relevant test equipment is working correctly and any harness or connectors are in good condition. This particularly applies to electronic control modules.

SEAT BELT ANCHORAGES

Seat belt anchorages are safety critical. When making repairs in these areas, it is essential to follow design specifications. Note that High Strength Low Alloy (HSLA) steel may be used in seat belt anchorages.

Where possible, the original production assembly should be used, complete with its seat belt anchorages, or the cut line should be so arranged that the original seat belt anchorage is not disturbed.

WARNING:

Body parts incorporating seat belt anchorages MUST be renewed completely if damaged beyond repair, as the welds in these areas are safety critical and can not be disturbed.

All welds within 250 mm (9.842 inches) of seat belt anchorages must be carefully checked for weld quality, including spacing of spot welds.

HIGH STRENGTH STEELS

Body panels are being increasingly manufactured in high strength steels to meet design requirements for safety and weight saving. As

panels in high strength steels can not be visually identified by the repairer, and as they can be more sensitive to excess heat than would be the case with low carbon steels, it is advisable that the following procedure be observed at all times.

While individual repairs will differ in detail, the following Panel Replacement Procedure has been devised placing emphasis on ease of repair and the elimination of unnecessary work. Where replacement of a particular panel involves departure from the Panel Replacement Procedure, a note to that effect is included in the relevant panel replacement operation.

STRAIGHTENING

Whenever possible, structural members should be cold straightened under tension. Do not attempt to straighten with a single pull but rework the damaged area using a series of pulls, releasing tension between each stage and using the opportunity to check alignment.

BODY JIG

Unless damage is limited to cosmetic panels, all repair work to body members must be carried out on a body jig, to make sure that impact damage has not spread into more remote parts of the structure. Mounting on a jig will also make sure that the straightening and panel replacement procedures do not cause further distortion. If original dimensions cannot be satisfactorily restored by these methods, damaged structural members should be replaced.

WARNING:

> Damaged areas should be cut away using a high speed saw, NOT an oxy-acetylene torch.

As a rule, body dimensions are symmetrical about the center line. A good initial check for distortion is therefore to measure diagonally and to investigate apparent differences in dimensions.

INSPECTION

Every accident produces individual variations in damage. Each repair is influenced by the extent of the damage and the facilities and equipment available for its rectification. Most accident damage can be visually inspected and the approximate extent of damage assessed.

Sometimes deformation will extend beyond the directly damaged area, and the severity of this must be accurately established so that steps can be taken to restore critical body components to their original dimensions. An initial check can be carried out by means of drop checks or, preferably, trammels.

Gauges are available which will accurately check for body twist. Where repairs necessitate renewal of a critical body component it is recommended that a body jig is used.

PANEL REPLACEMENT PROCEDURE

DAMAGED PANEL REMOVAL

The following information is designed to explain the basic panel removal and replacement method.

This method standard may vary slightly from one vehicle to another.

The main criteria in the removal and installation of body panels is that original standard recommended by Land Rover is maintained as far as possible.

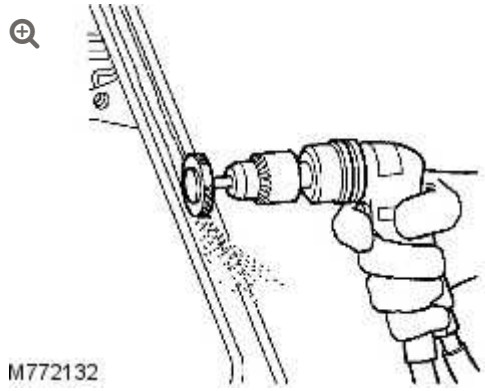

1. Expose resistance spot welds. For those spot welds which are not obviously visible, use a rotary drum sander or wire brush fitted to an air drill, or alternatively a hand held wire brush.

NOTE:

In wheel arch areas it may be necessary to soften underbody coating, using a hot air gun prior to exposing spot welds.

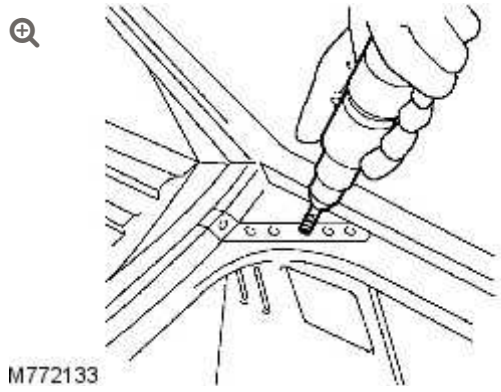

2. Cut out welds using a cobalt drill.

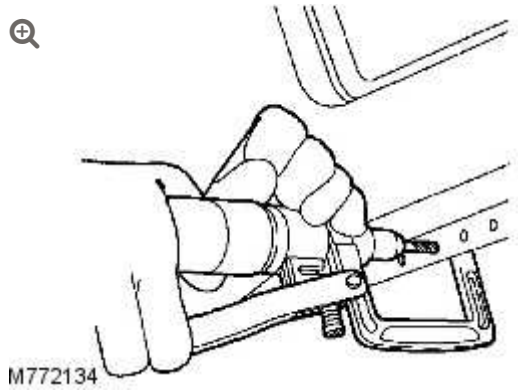

3. Alternatively, use a clamp-type spot weld remover.

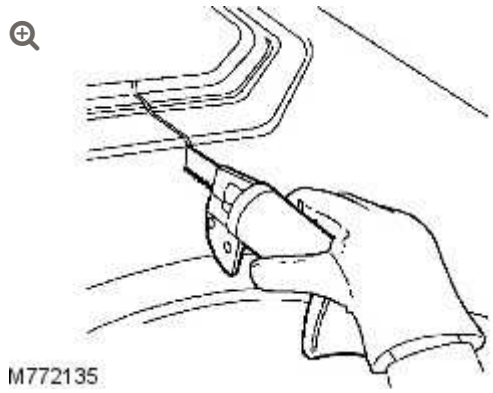

4. Cut away the bulk of the panel as necessary using an air saw.

NOTE:

On certain panel joints, MIG welds and braze should be removed using a sander where possible, before cutting out the panel bulk.

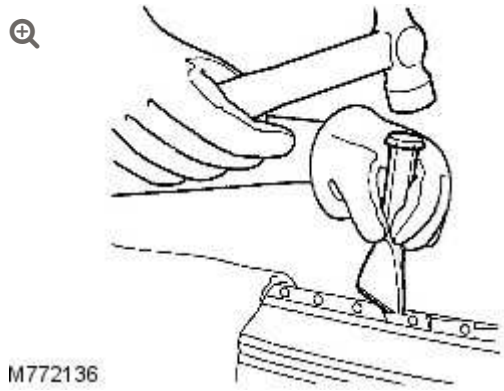

5. Separate spot welded joints and remove panel remnants using hammer, bolster chisel and pincers.

EXISTING PANEL PREPARATION

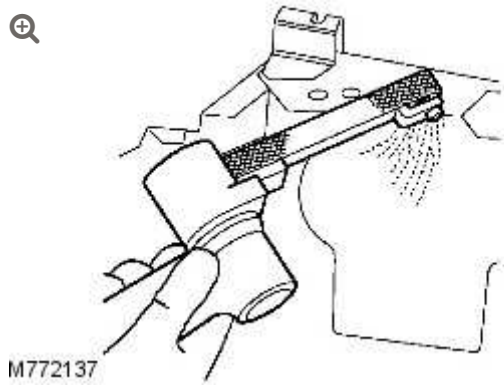

NOTE:

Prior to sanding, remove remaining sealant using a hot air gun to minimize the risk of toxic fumes caused by generated heat.

1. Clean all panel joint edges to a bright smooth finish, using a belt-type sander.

CAUTION:

Care must be taken to avoid excessive heat build up when using this equipment.

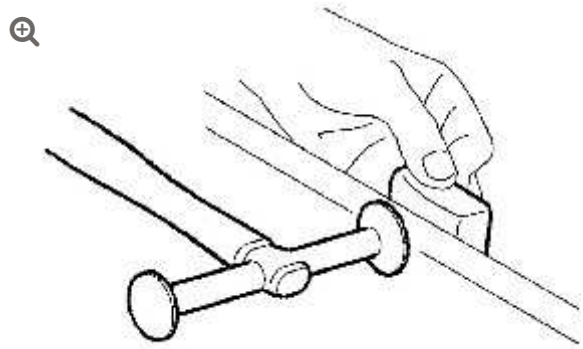

M772138

CAUTION:

Never use the same tools for working with steel or aluminum. All tools used for working with steel must be kept separate from those used on aluminum.

2. Straighten existing panel joint edges using a shaping block and hammer.

NEW PANEL PREPARATION

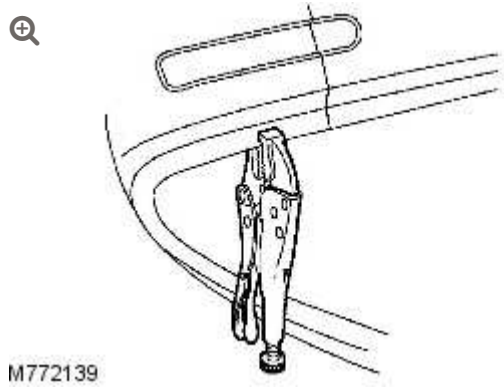

M772139

1. Mark out the bulk of new the panel and trim to size, leaving approximately 50 mm (1.968 inches) overlap with the existing panel.

Offer up new panel/section, align with associated panels (e.g. new body side panel aligned with door and trunk lid). Clamp the prepared panel into position.

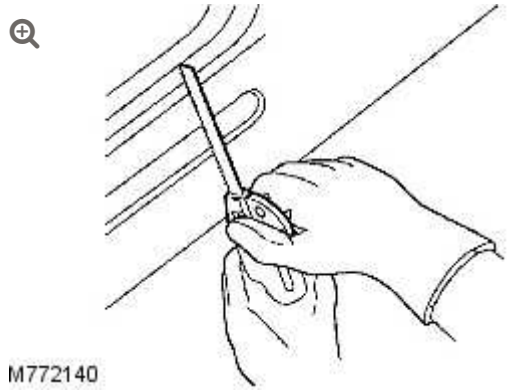

2. Cut new and existing panels as necessary to form butt, joggle or brace joint as required. Remove all clamps and metal remnants.

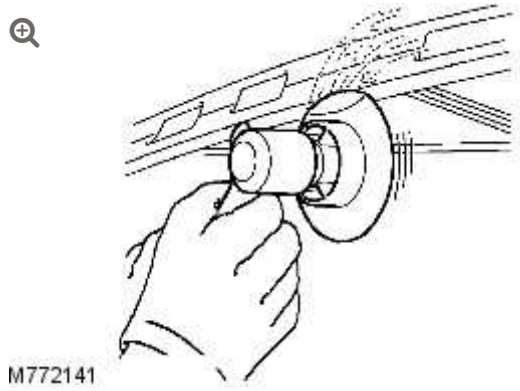

3. Prepare new panel joint edges for welding by sanding to a bright finish. This must include inner as well as outer faces.

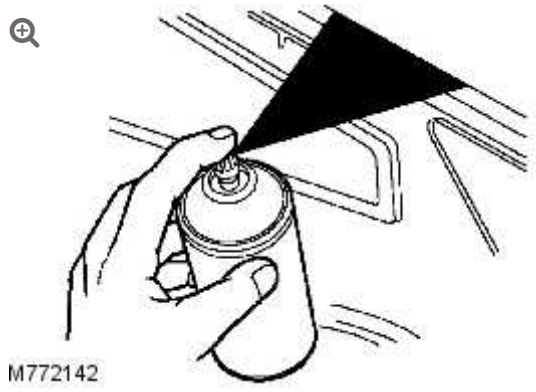

4. Apply a suitable weld-through primer, to panel joint surfaces that are to be welded, using a brush or aerosol can as required.

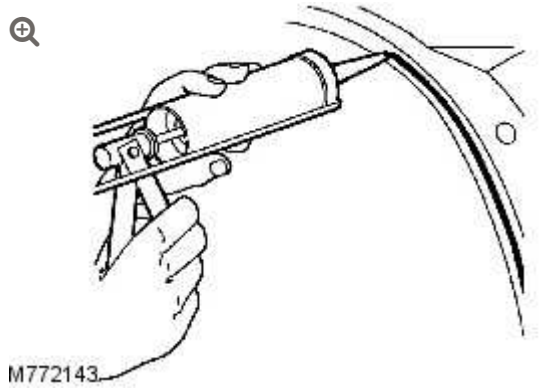

5. Apply adhesive sealant to panel joint surfaces.

PANEL INSTALLATION

1. Offer up the new panel and align with associated panels. Clamp the panel into position using welding clamps or mole grips.

NOTE:

In cases where access for welding clamps is difficult, it may be necessary to use tack welds.

Where a joggle or brace joint is being adopted, make a set in the original panel joint edge or insert a brace behind the joint.

EQUIPMENT PREPARATION

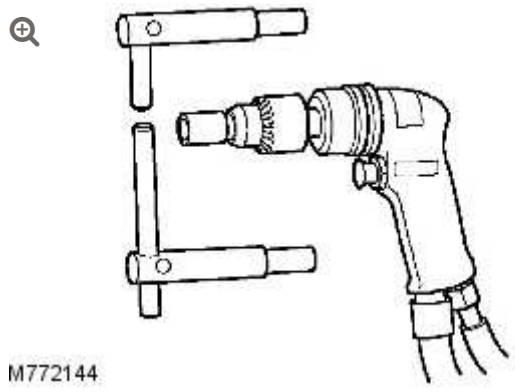

1. Select the arms for resistance spot welding and shape the electrode tips using a tip trimmer.

Tips should be dressed so the diameter is equal to twice the thickness of the metal to be welded plus 3 mm (0.118 inch).

CAUTION:

Use arms not exceeding 300 mm (11.811 inches) in length.

NOTE:

To maintain weld efficiency, the tips will require regular cleaning and dressing.

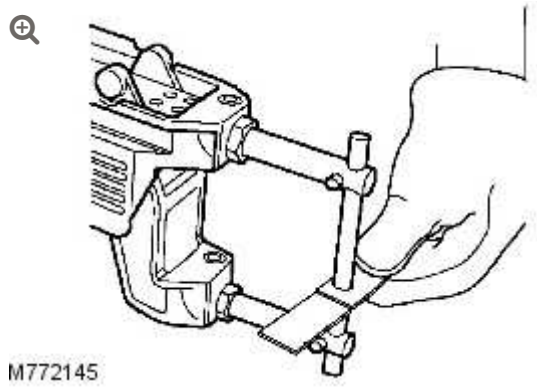

2. Fit the resistance spot welding arms and test equipment for satisfactory operation, using test coupons.

Where monitoring equipment is not available, verify weld strength by checking that metal around the weld puddle pulls apart under tension during pulling.

PANEL ATTACHMENT

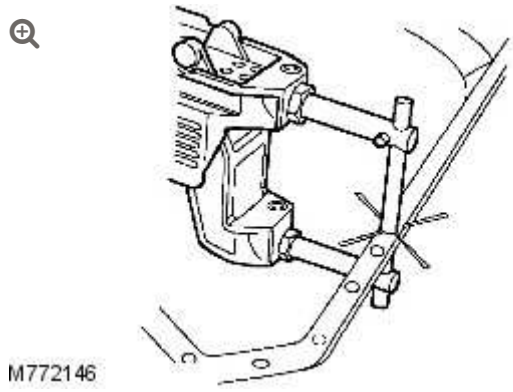

1. Use a resistance spot welder where access permits.

Try to make sure weld quality by using a welding monitor where possible.

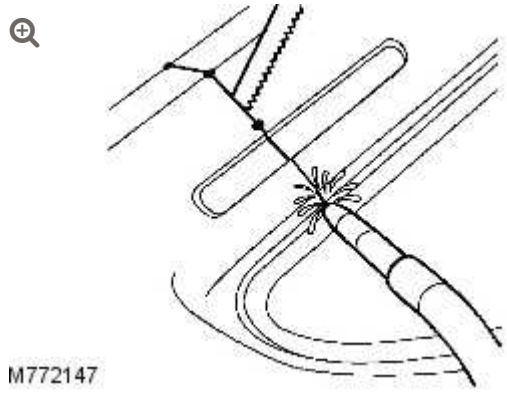

2. Using MIG equipment, tack weld butt joints and re-check alignment and panel contours where necessary. Make sure that a gap is maintained to minimize welding distortion, by inserting a hacksaw blade as an approximate guide.

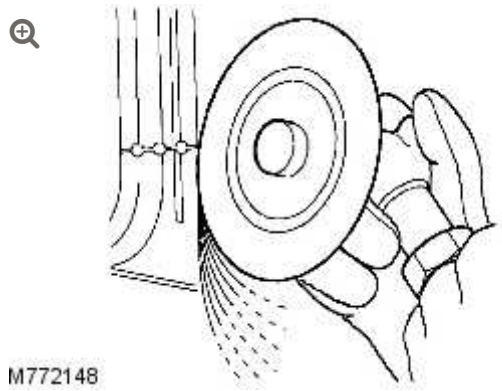

3. Dress the MIG tack welds using a sander with 36 grit disc, or a belt-type sander where access is limited.

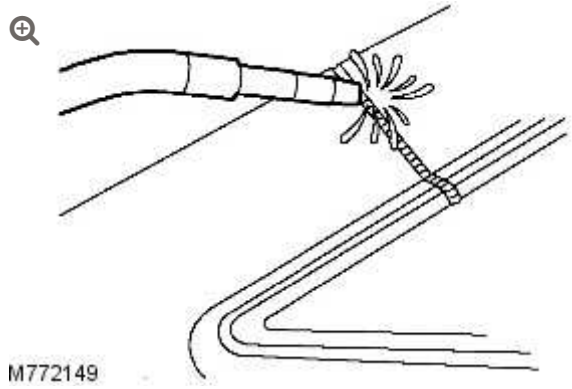

4. MIG seam weld butt joints. When MIG welding long joints, a large amount of heat is generated which can cause the panels to distort.

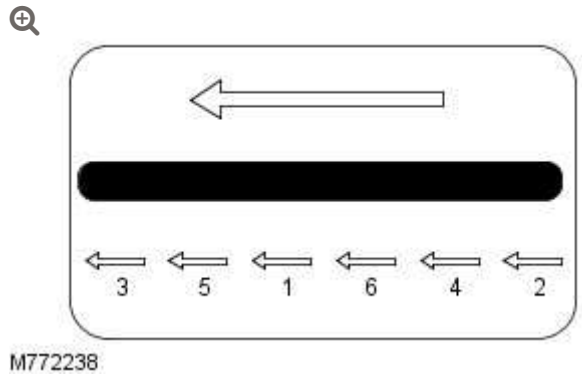

5. To avoid heat distortion, divide the welds into small sections as shown in the illustration. The large arrows signifies the direction of welding.

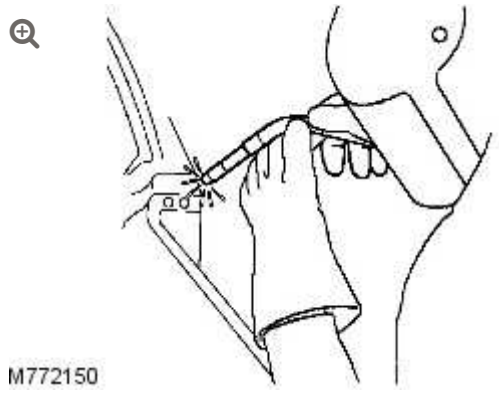

6. Always use MIG plug welds where excessive metal thickness or limited access make resistance spot welding impractical.

Make plug welds either by using holes left by the spot weld cutter, or through holes punched and drilled for the purpose, approximately 8 mm (0.134 inch) diameter.

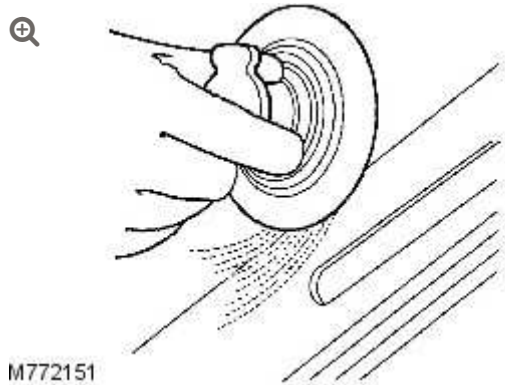

7. Dress all welds using either a sander with 36 grit disc, or a belt-type sander and/or wire brush. When dressing welds make sure an area as small as possible is removed to protect the zinc coating.

8. Carry out any further necessary sealing operations.

PANEL JOINT TYPES

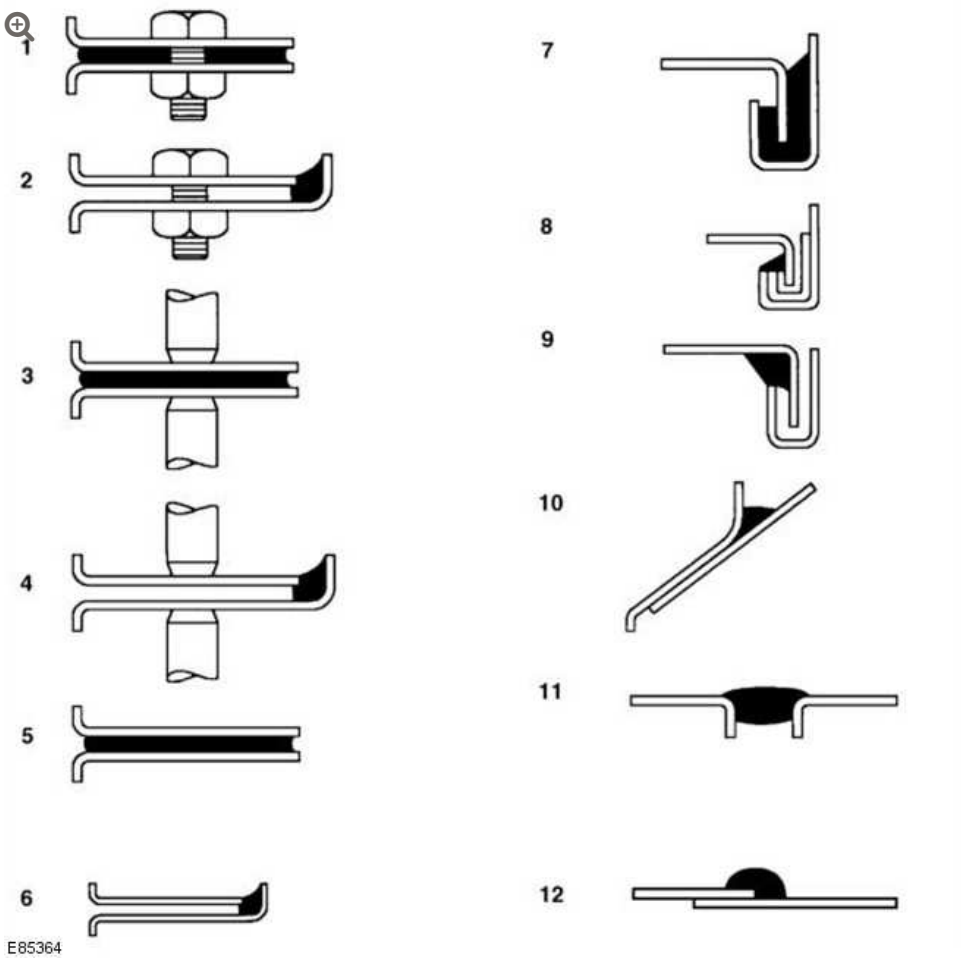

ITEM	DESCRIPTION
1	Between panels - bolted
2	Panel edges - bolted
3	Between panels - spot welded
4	Panel edges - spot welded
5	Between panels - bonded
6	Panel edges - bonded
7	Clinch joint - type (a)
8	Clinch joint - type (b)
9	Clinch joint - type (c)
10	Gaps between panels - type (a)

ITEM	DESCRIPTION
11	Gaps between panels - type (b)
12	Lap joint

PANEL PREPARATION

GENERAL

Replacement panels are supplied with a cathodic primer coating as part of the panel protection and in compliance with the vehicle's Corrosion Warranty, where applicable.

DO NOT remove the primer before paint refinishing. In the event of localized surface damage or imperfections, make sure that only the minimum of primer is removed during any rectification work, to achieve an effective repair.

Rectify damage as far as possible by panel beating or straightening.

To remove corrosion or paint runs on the outer surfaces, abrade the primer coat in the affected area as necessary using the following procedure:

Care Points

1. Clean the panel using a solvent wipe
2. Treat exposed areas of metal with an etch phosphate process
3. Re-treat the affected area using either a separate acid-etch primer and two-pack surface treatment, or an integrated etch primer/filler

PANEL PREPARATION

The following procedures should be applied when repairing panels:

Welded Panels

1. Remove primer from the immediate vicinity of new and existing panel flanges, cleaning to bright metal finish
2. On joints to be spot welded, apply weld-through zinc rich primer to joint faces of both flanges. Make spot welds while primer is still wet or according to the manufacturer's instructions
3. Dress accessible weld joints
4. Clean panel using solvent wipe
5. Treat bare metal with an etch phosphate process
6. Re-treat repaired areas

When replacing part or sectioned panels, the basic procedure is the same as for welded panels described above, with the following variations

Sectioned Panels

1. Remove primer from both new and existing joint faces, cleaning to a bright metal finish
2. Where an overlap joint with the existing panel is to be spot welded, apply weld-through, zinc rich primer to both joint faces and spot weld while the primer is still wet, or according to the manufacturer's instructions
3. MIG weld butt joints where applicable
4. Clean the panel with a solvent wipe
5. Treat bare metal areas using an etch phosphate process
6. Re-prime affected areas as necessary as for rectifying transit damage
7. Treat the inner faces of lap or butt joints with a suitable cavity wax

Clinched Panels

1. Abrade primer on new and existing panel joint faces, and clean using a solvent wipe
2. Apply metal-to-metal adhesive where applicable
3. Where joints are to be spot welded, apply suitable weld-through, zinc rich primer to weld areas
4. Where joints are to be MIG, arc or gas welded, apply zinc rich primer in adjacent areas but leave the welded area untreated
5. To retain the panel while clinching the flanges, tack spot weld or plug weld as appropriate
6. Clean the panel with a solvent wipe
7. Treat bare metal areas with a suitable etch phosphate process
8. Re-prime affected areas as necessary as for rectifying transit damage

PAINT PREPARATION

The following process must be adhered to for paint refinishing operations:

1. Seal required exterior and interior seams with an approved seam sealer
2. Repair any damage to underbody sealers
3. Apply a two-pack paint refinishing system
4. Apply cavity wax to all interior surfaces which have not received refinish paint

PAINT REPAIRS

Before carrying out paintwork repairs, clean the vehicle thoroughly using either a steam cleaner or high-pressure washer.

Wash locally repaired areas using a mild water-mixable detergent and wipe clean with solvent, immediately before paint application.

WARNING:

When preparing bumpers for painting, make sure the parking distance control (PDC) sensors are not damaged. Only remove the clear coat if possible. When painting the PDC sensors, do not apply excessive layers of paint as this can hinder the performance of the sensors.

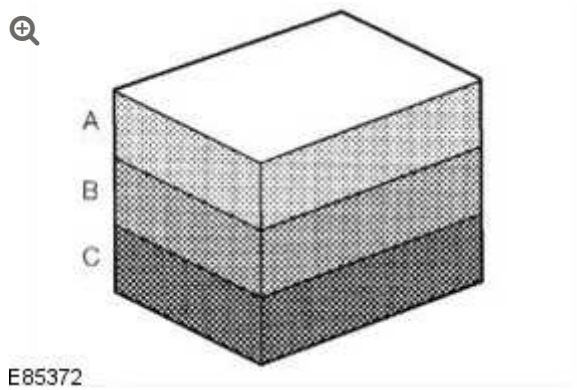

ITEM	DESCRIPTION
A	Two-pack top coat
B	Two-pack primer filler and etch primer
C	Etch phosphate

CAUTION:

When heat curing paint repairs, the temperature must not exceed 65°C (149°F). Temperatures above this figure will cause the reflective elements within the headlamps and tail lamps to distort and may damage other components.

Make sure that damaged paintwork which has led to exposed metal is abraded until the metal is clean, extending beyond the area of the original damage.

Treat the bare metal with an etch phosphate to remove all traces of rust and to provide a key for new paint coats.

Re-treat the affected area using either a separate acid-etch primer and two-pack treatment or an integrated etch primer/filler, and follow with a two-pack paint system.

Treat those surfaces not receiving paint using an approved cavity wax, following paint operations.

FRONT END BODY PANELS

SPECIFICATIONS

Torque Specifications

DESCRIPTION	NM	LB-FT
* Radiator grille support nuts	10	7

*** New nuts must be installed**

FRONT END BODY PANELS

COWL PANEL GRILLE (G913875)

REMOVAL AND INSTALLATION

80.15.62	PLENUM - AIR INTAKE - RENEW	ALL DERIVATIVES	0.2	USED WITHINS	+

SPECIAL TOOL(S)



100-005A (LRT-99-500A)

General purpose puller

REMOVAL

1. Remove the RH windshield moulding.
   For additional information, refer to: Windshield Moulding (501-11 Glass, Frames and Mechanisms, Removal and Installation).

2. 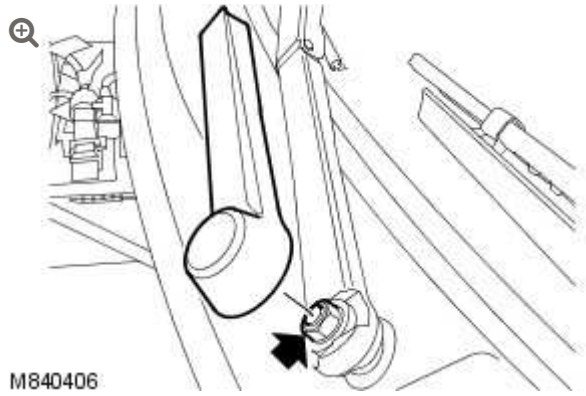

   Remove both nut covers from the 2 windshield wiper pivot arms and remove the 2 nuts.

3. Remove both windshield wiper pivot arms from the pivot shafts.

4. 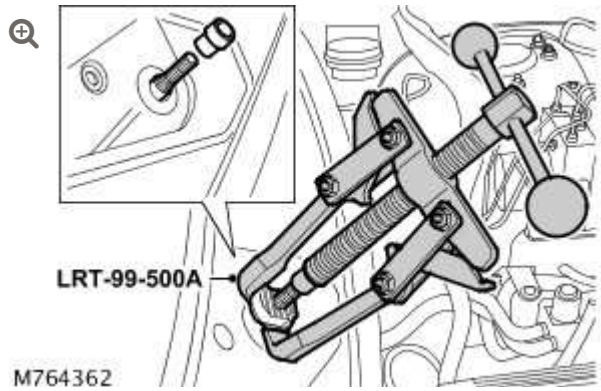

   Using special tool, remove and discard the windshield wiper pivot arm aluminum boss from the 2 pivot shafts.

5. Remove the 2 plastic inserts from the windshield wiper pivot arm pivot shafts.

6.

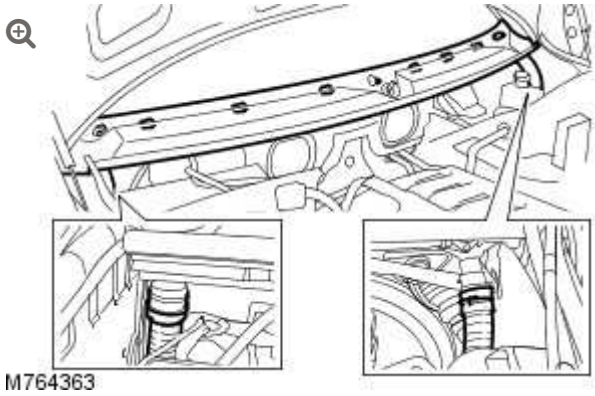

Release the 2 drain tubes from the underside of the cowl panel grille.

7. Release the 4 cowl panel grille clips and reposition away from the pivot shafts.

8. Remove the cowl panel grille.
   - Reposition the cowl panel grille away from the LH windshield moulding.

INSTALLATION

1. Install the cowl panel grille.
   - Reposition below the LH windshield moulding and secure with the clips.

2. Secure the drain tubes to the cowl panel grille.

3. Install the plastic inserts to the windshield wiper pivot arm pivot shafts.

4. Install a new aluminum boss to each windshield wiper pivot arm pivot shaft.

5. Install both windshield wiper pivot arms to the pivot shafts.

- Install a new nut but do not tighten the nut fully at this stage.

6.

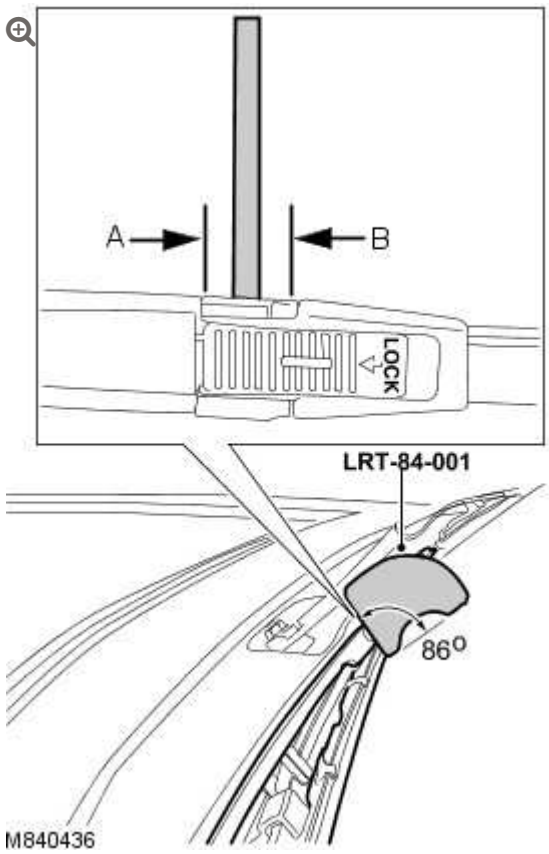

Align the special tool between points A and B on the windshield wiper pivot arm.

- Align the face of the windshield wiper pivot arm to the special tool angle of 86 degrees.

7.

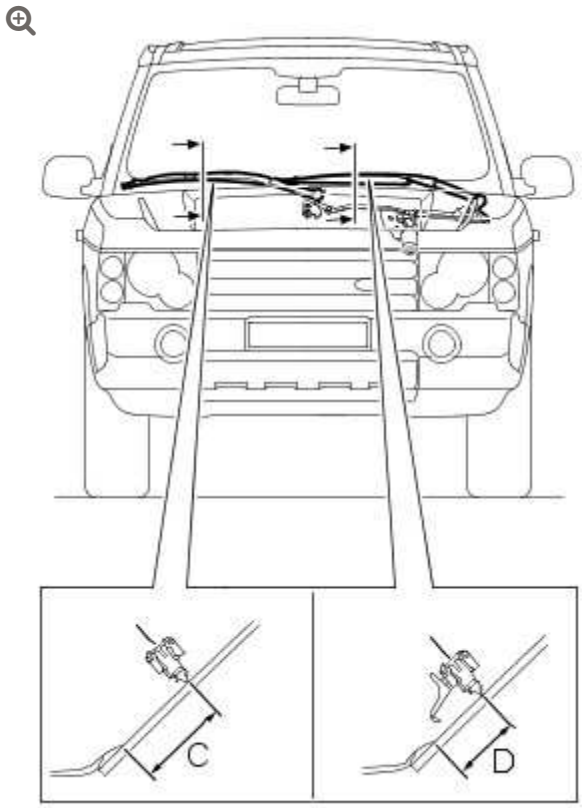

M840435A

Retaining an 86 degrees angle, set the respective windshield wiper pivot arm to the dimension shown.

- Passenger side C = 58 mm (2.283 inches). Drivers side D = 40.5 mm (1.594 inches).
- The measurement must be taken from the plenum chamber glass seal, to the lip of the windshield wiper blade adjacent to the windshield wiper pivot arm fulcrum.

8. Tighten the windshield wiper pivot arm nuts.
   - Tighten the nuts to 35 Nm (26 lb.ft).

9. Install both windshield wiper pivot arm nut covers.

10. Install the RH windshield moulding.
    For additional information, refer to: Windshield Moulding

(501-11 Glass, Frames and Mechanisms, Removal and Installation).

FRONT END BODY PANELS

ENGINE UNDERSHIELD

(G457364)

REMOVAL AND INSTALLATION

76.10.50	ENGINE UNDERSHIELD - CENTRE - RENEW	ALL DERIVATIVES	0.1	USED WITHINS	+

REMOVAL

1. **WARNING:**

   Do not work on or under a vehicle supported only by a jack. Always support the vehicle on safety stands.

   Raise and support the vehicle.

2.

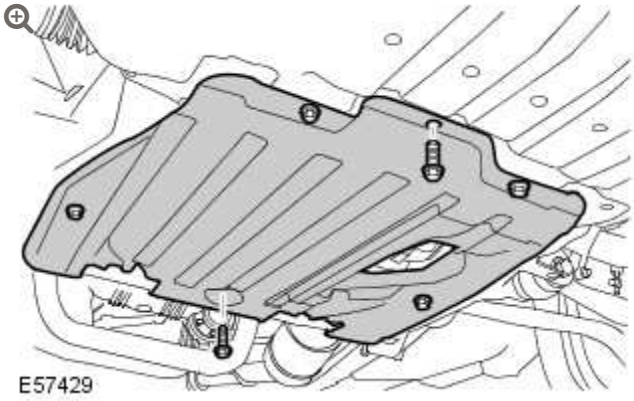

Remove the engine undershield.

- Remove the 6 screws.

INSTALLATION

1. To install, reverse the removal procedure.

FRONT END BODY PANELS

FENDER (G1225041)

REMOVAL AND INSTALLATION

76.10.24	FENDER - FRONT - LH/EACH - REMOVE FOR ACCESS AND REFIT	ALL DERIVATIVES	1.7	USED WITHINS	+

REMOVAL

1. Secure the hood in the service position.

2. Remove the front fender trim panel.
   For additional information, refer to: Front Fender Trim Panel (501-08, Removal and Installation).

3. Remove the headlamp assembly.
   For additional information, refer to: Headlamp Assembly (417-01, Removal and Installation).

4.

NOTE:

Note the fitted position of the fender before removal.

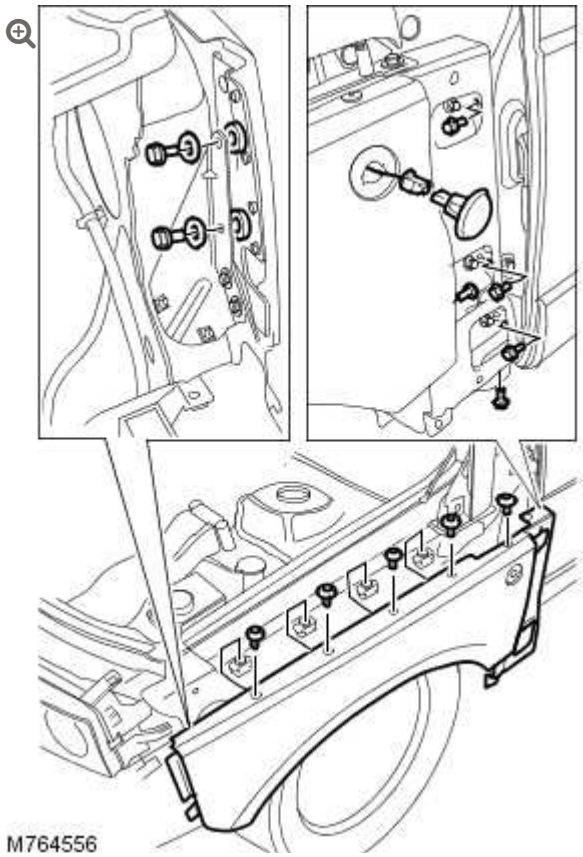

Release the fender.

- Remove the 8 bolts.
- Remove the 2 spacers.

5. Remove the side turn signal lamp.
   - Push the lamp forwards to release it from the fender.
   - Release the clip.
   - Disconnect the electrical connector.

6. Remove the fender.
   -

Remove and discard the 5 bolts securing the fender panel to the fender apron panel brackets.

INSTALLATION

1. Clean the component mating faces.

2. **CAUTION:**

   Make sure that new bolts are installed.

   Install the fender.

   - Install 5 new bolts, but do not fully tighten at this stage.

3. Install the 2 spacers.

4. Install the remaining 6 bolts, but do not fully tighten at this stage.

5. Align the front fender, tighten the bolts to 10 Nm (7 lb.ft).

6. Install the headlamp assembly.
   For additional information, refer to: Headlamp Assembly (417-01, Removal and Installation).

7. Install the front fender trim panel.
   For additional information, refer to: Front Fender Trim Panel (501-08, Removal and Installation).

8. Install the side turn signal lamp.

   - Connect the electrical connector.

9. Connect the hood support struts.

FRONT END BODY PANELS

FENDER SPLASH SHIELD

(G1236453)

REMOVAL AND INSTALLATION

76.10.48	LINER - FRONT WHEEL ARCH - FRONT - LEFT/SINGLE - RENEW	ALL DERIVATIVES	0.7	USED WITHINS	+

REMOVAL

1. **WARNING:**

   Do not work on or under a vehicle supported only by a jack. Always support the vehicle on safety stands.

   Raise and support the vehicle.

2. Remove the front wheel.

3.

NOTE:

RH side only.

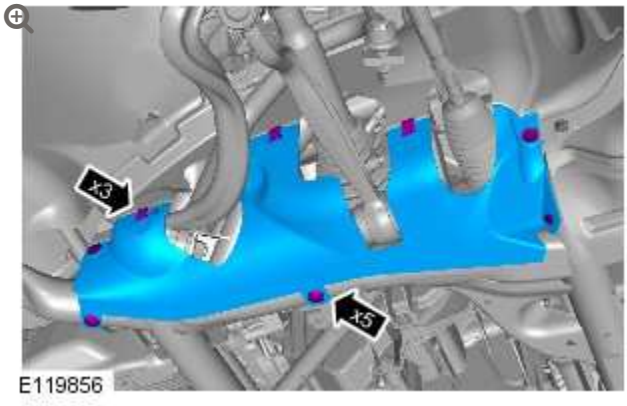

Remove the fender splash shield lower extension panel.

4.

NOTE:

RH side only.

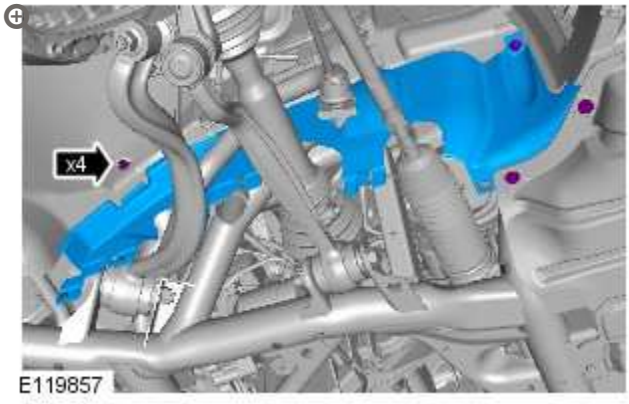

Remove the fender splash shield upper extension panel.

5.

CAUTION:

LH illustration shown, RH is similar.

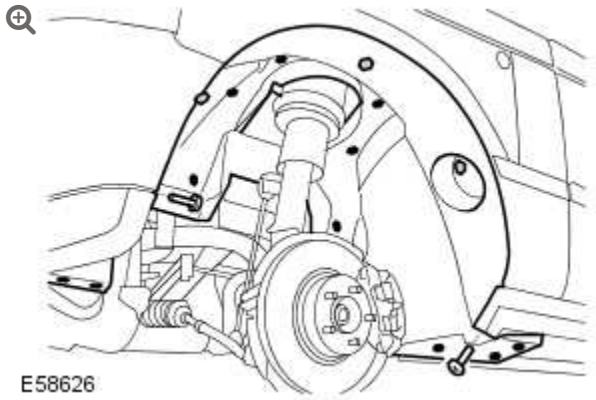

Remove the front fender splash shield.

- Remove the 3 nuts.
- Remove the 13 screws.
- Disconnect the tire pressure monitoring system front antenna electrical connector.

6.

NOTE:

Do not disassemble further if the component is removed for access only.

Remove the tire pressure monitoring system front antenna.

- Release the 2 clips.

INSTALLATION

1. Install the tire pressure monitoring system front antenna.

2. Install the front fender splash shield.
   - Connect the tire pressure monitoring system front antenna electrical connector.
   - Tighten the screws.
   - Tighten the nuts.

3. **NOTE:**

   RH side only.

   Install the fender splash shield upper extension panel.
   - Tighten the bolts to 8 Nm (6 lb.ft).

4. **NOTE:**

   RH side only.

   Install the fender splash shield lower extension panel.

5. Install the front wheel.
   - Tighten the wheel nuts to 140 Nm (103 lb.ft).

FRONT END BODY PANELS

HOOD LATCH PANEL (G1234923)

REMOVAL AND INSTALLATION

76.16.22	PLATFORM - HOOD LATCH - RENEW	ALL DERIVATIVES	1.8	USED WITHINS	+

REMOVAL

NOTE:

Removal steps in this procedure may contain installation details.

1. Disconnect the battery ground cable.
   Refer to: Specifications (414-00, Specifications).

2. **WARNING:**

   Make sure to support the vehicle with axle stands.

   Raise and support the vehicle.

3.

Refer to: Headlamp Assembly (417-01, Removal and Installation).

4.

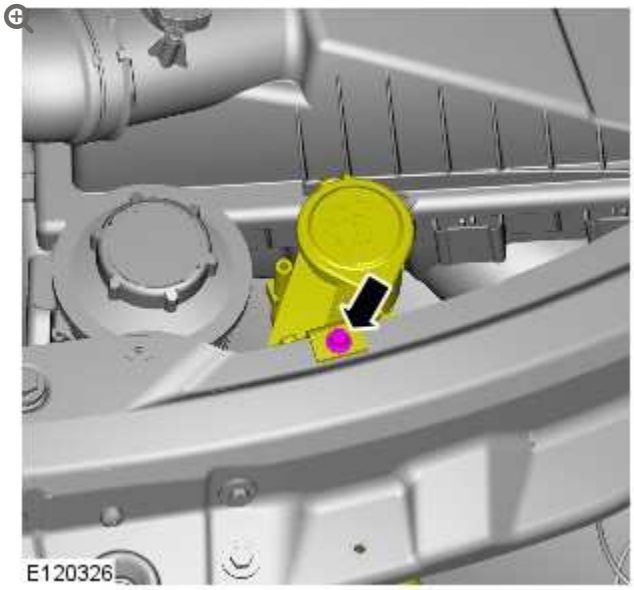

Torque: **4 Nm**

5.

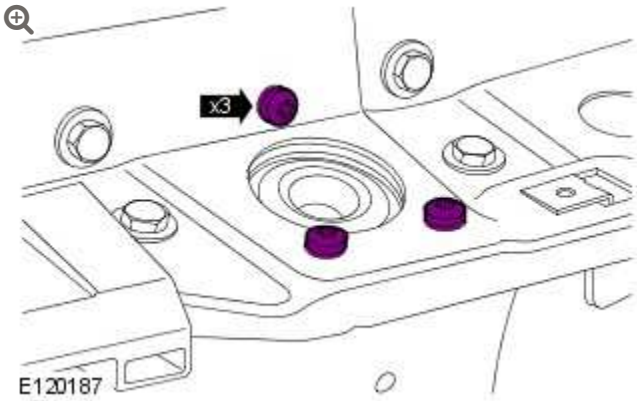

Torque: **7 Nm**

6.

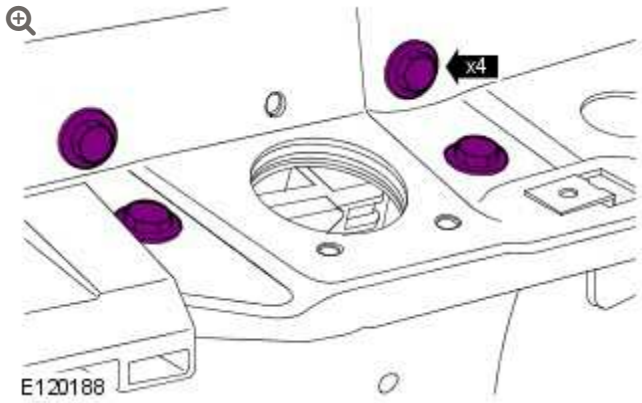

Torque: **7 Nm**

7.

NOTE:

Some variation in the illustrations may occur, but the essential information is always correct.

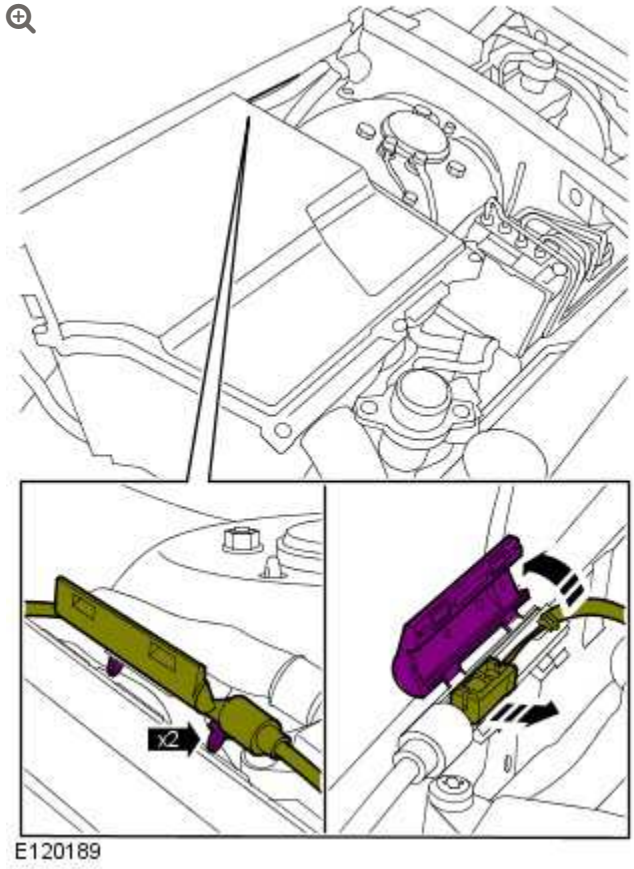

8.

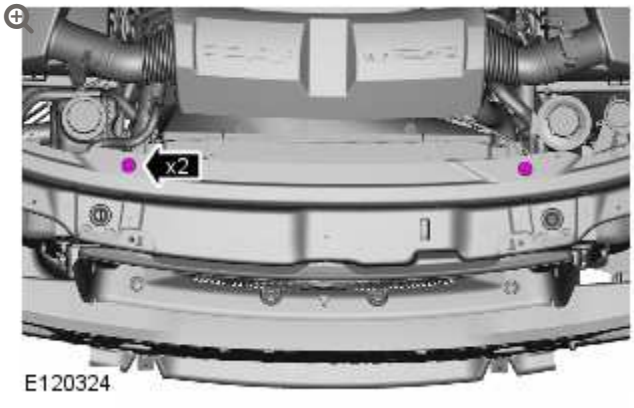

9.

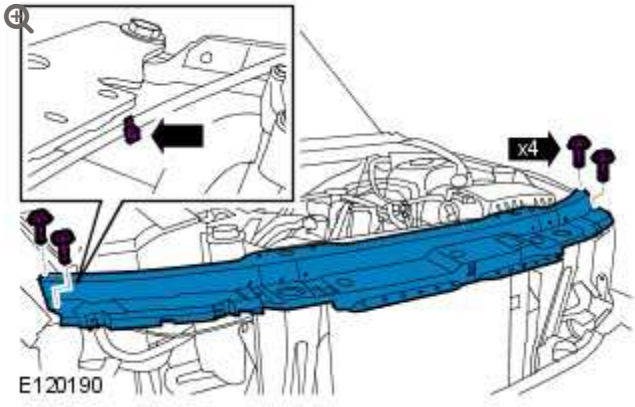

Torque: **22 Nm**

10.

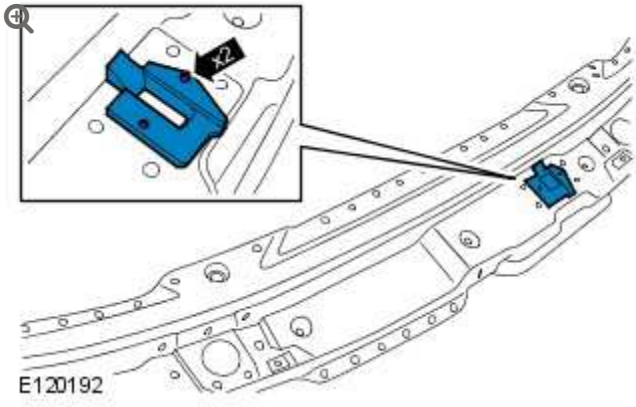

INSTALLATION

1. To install reverse the removal procedure.

FRONT END BODY PANELS

RADIATOR GRILLE SUPPORT (G1226557)

REMOVAL AND INSTALLATION

REMOVAL

NOTES:

- Removal steps in this procedure may contain installation details.
- The ignition must be switched off.

1. **WARNING:**

   Make sure to support the vehicle with axle stands.

   Raise and support the vehicle.

2. **NOTE:**

   The procedure must be carried out on both sides.

Refer to: Headlamp Assembly (417-01, Removal and Installation).

3.

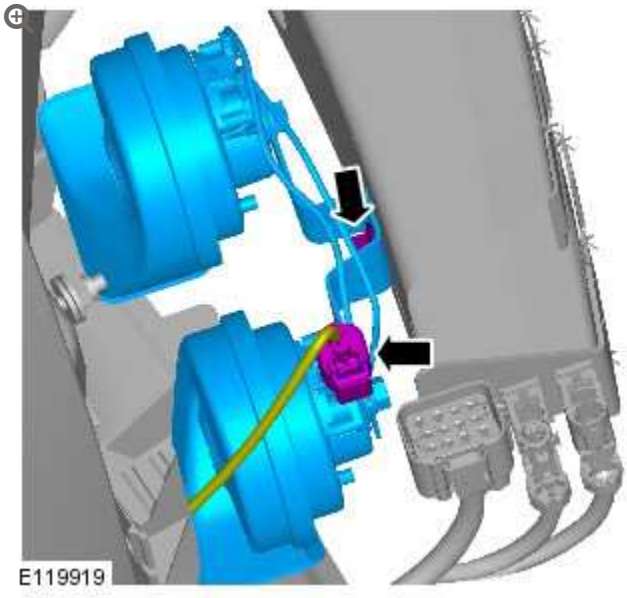

Torque: **20 Nm**

4.

WARNING:

Make sure that new nuts are installed.

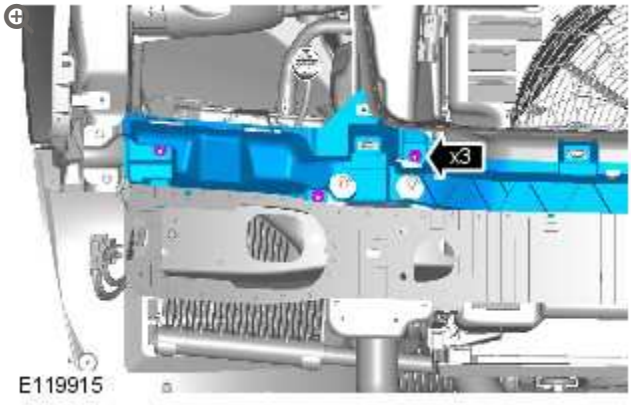

Torque: **4 Nm**

5.

WARNING:

Make sure that new nuts are installed.

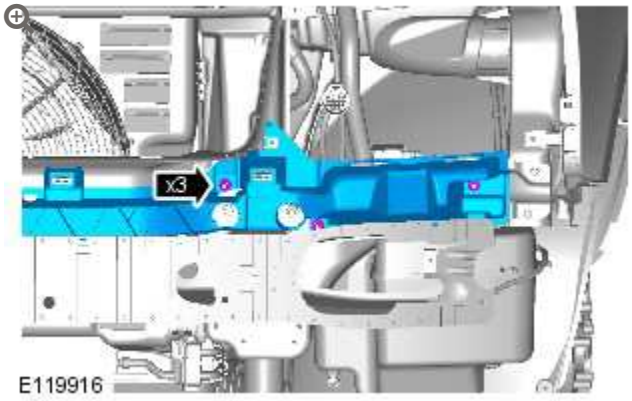

Torque: **4 Nm**

6.

CAUTION:

Protect the surrounding trim from damage when changing the component.

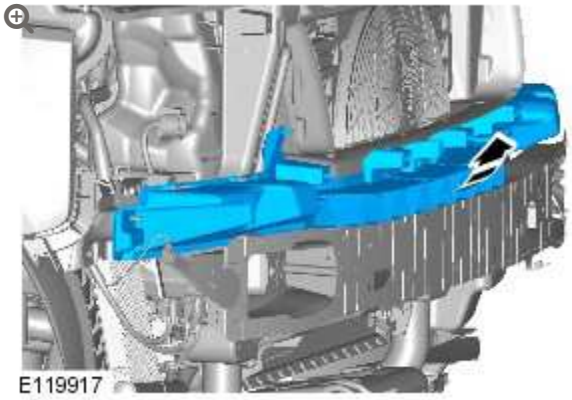

INSTALLATION

1. To install, reverse the removal procedure.

FRONT END BODY PANELS

RADIATOR SPLASH SHIELD (G1223880)

REMOVAL AND INSTALLATION

76.11.81	UNDERTRAY - ASSEMBLY - FRONT - RENEW	ALL DERIVATIVES	0.4	USED WITHINS	+

REMOVAL

NOTE:

Some variation in the illustrations may occur, but the essential information is always correct.

1.

WARNING:

Make sure to support the vehicle with axle stands.

Raise and support the vehicle.

2.

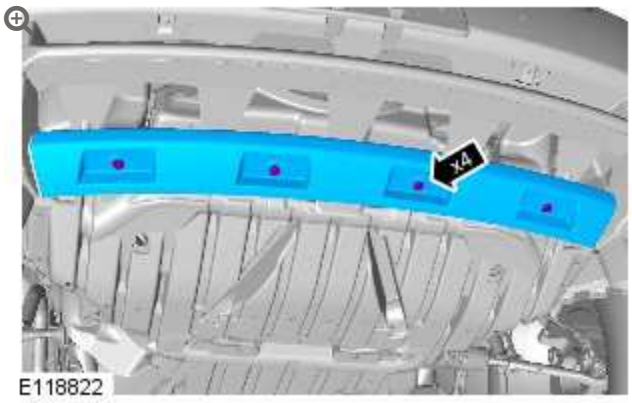

Remove the towing eye cover.

- Release the 4 clips.

3.

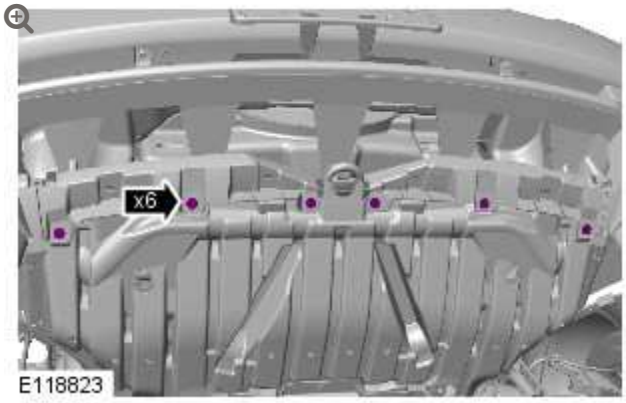

Release the radiator splash shield.

- Remove the 6 screws.

4.

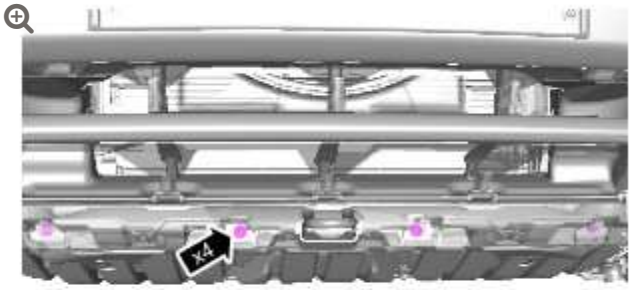

Release the radiator splash shield.

- Remove the 4 screws.

5.

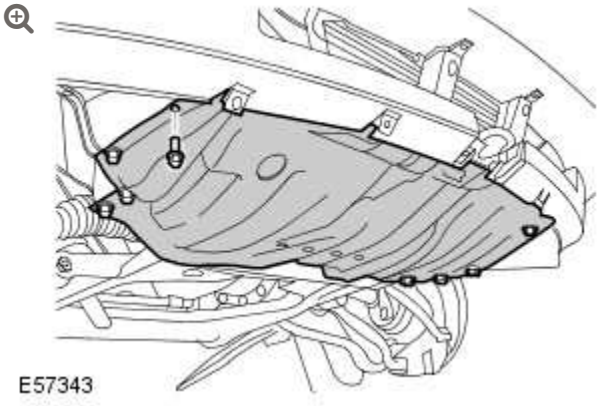

Release the radiator splash shield.

- Remove the 8 screws.

6.

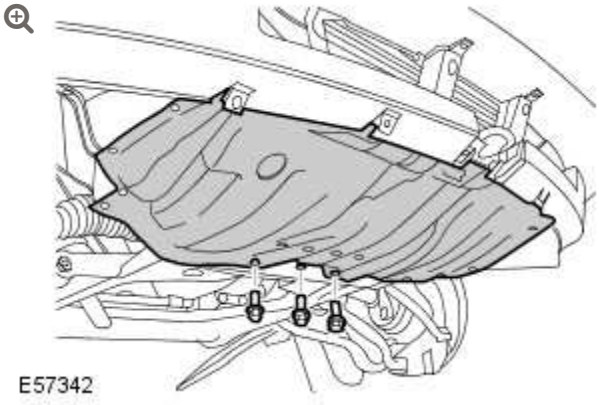

Remove the radiator splash shield.

- Remove the 3 screws.

7.

NOTE:

Do not disassemble further if the component is removed for access only.

Remove the 6 clips.

INSTALLATION

1. Install the radiator splash shield.
    - Install new clips.
    - Tighten the screws.
2. Install the towing eye cover.
    - Secure with the clips.

BODY CLOSURES

DOOR (G928736)

REMOVAL AND INSTALLATION

REMOVAL

NOTES:

- The doors are serviced as complete assemblies. The door skins are not available as serviceable items.
- The doors are made from aluminum. The door inner assemblies are made of pressed panels and die-cast panels, which are joined together using a combination of riveting and bonding.

1. Protect the bodywork as necessary to prevent damage to the vehicle or paintwork.

2.

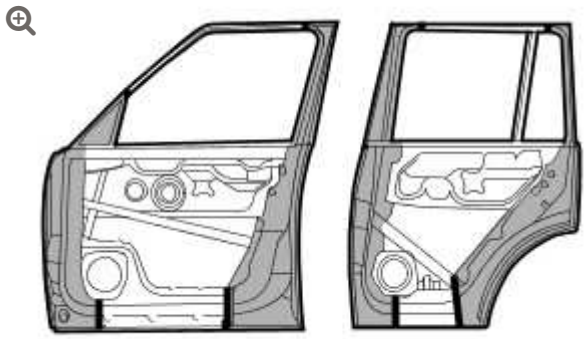
M772221A

Remove the door.

INSTALLATION

CAUTION:

The shaded areas in the above illustration highlights the cast aluminum panels. These panels cannot be repaired, if damage occurs to these panels then the whole door must be replaced.

1. Protect the bodywork as necessary to prevent damage to the vehicle or paintwork.

2. Install the door.

BODY CLOSURES

LIFTGATE STRUT (G843206)

REMOVAL AND INSTALLATION

REMOVAL

1. Raise the liftgate and support with a block of wood.

2. 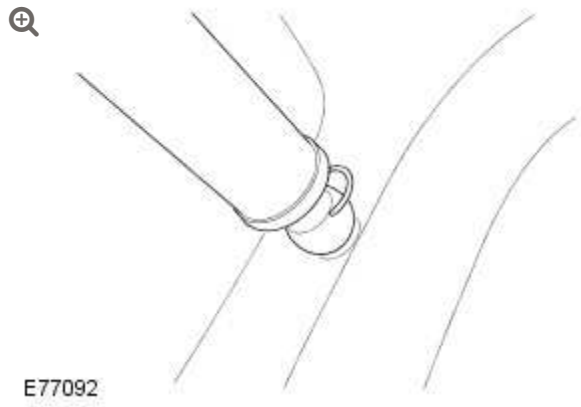

   Remove the circlip securing the gas strut top mounting.

3. Remove the circlip securing the bottom ball joint and remove the gas strut.

INSTALLATION

1. The refit procedure is a reverse of the removal.

BODY CLOSURES

TAILGATE STRUT (G843208)

REMOVAL AND INSTALLATION

REMOVAL

1. Open the tailgate.

2. 

   Remove the circlips securing the gas strut top mounting.

3.



Remove the circlips securing the gas strut bottom mounting, and remove the strut.

INSTALLATION

1. The refit procedure is a reverse of the removal.

INTERIOR TRIM AND ORNAMENTATION

SPECIFICATIONS

Torque Specifications

DESCRIPTION	NM	LB-FT
Ignition switch to in-vehicle crossbeam bracket screws	2	2
Instrument panel upper section large headed screws	3	2
Passive anti-theft system (PATS) module to the heater and evaporator core housing bracket screws	1	1
Wiring harness to in-vehicle crossbeam plastic self tapping nut	2	2
Steering column lower shroud center screw	2	2
Portable camera docking station to lower glove compartment screws	3	2
Upper and lower glove compartment latch to liner screws	2	2
Driver lower air bag trim panel to instrument panel screws	3	2
Veneer trim panel to floor console extension trim panel screws	2	2
Steering column lower shroud outer screws	6	4
Column switchgear and clockspring housing to steering column screws	6	4
Upper glove compartment to instrument panel reinforcement screws	2	2
Heater and evaporator core housing to in-vehicle crossbeam nuts	7	5

DESCRIPTION	NM	LB-FT
C-pillar lower trim panel screw	8	6
C-pillar upper trim panel screw	6	4
* A-pillar trim panel screw	3	2
Footrest trim panel bolt	5	4
Rear seat bolts	40	30
Loadspace luggage tie-down bolt	25	18

*** Indicates a new bolt, nut or screw must be installed.**

A-PILLAR TRIM PANEL

(G892834)

REMOVAL AND INSTALLATION

76.13.26	TRIM PANEL - A-PILLAR - UPPER - RENEW	ALL DERIVATIVES	0.1	USED WITHINS	+

REMOVAL

WARNING:

The air bag is mounted directly under this component, extreme care is necessary.

1. Release the door aperture weatherstrip for access.

2. Release the screw cover.
   - Remove the Torx screw.

3.

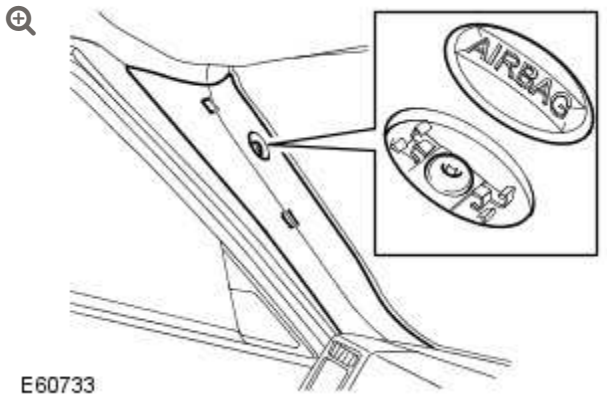

Remove the A-pillar upper trim panel.

- Carefully release the 2 clips.

4.

NOTE:

Do not disassemble further if the component is removed for access only.

Remove the 2 clips.

INSTALLATION

1. Install the clips.

2.

CAUTION:

Make sure the Torx screw is not over tightened. Failure to follow this instruction will result in damage to the vehicle.

Install the A-pillar upper trim panel.

- Secure the clips.

- Tighten the Torx screw to 2 Nm (1.5 lb.ft).
- Install the screw cover.
- Install the door aperture weatherstrip.

B-PILLAR TRIM PANEL

(G1239863)

REMOVAL AND INSTALLATION

REMOVAL

NOTE:

Removal steps in this procedure may contain installation details.

1.

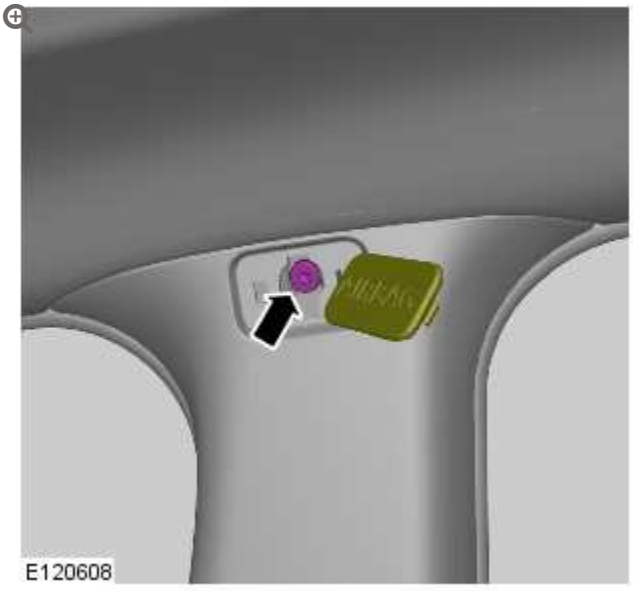

Torque: **6 Nm**

2. **NOTES:**

- Release the front safety belt lower anchor bolt cover clip upwards and away from the front seat base side trim panel.
- Raise the seat base for access.

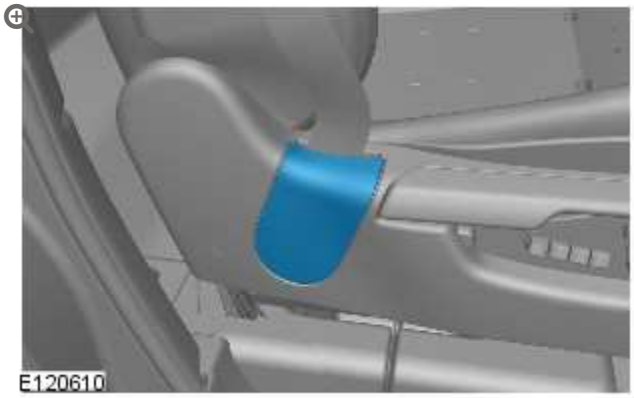

3. **CAUTIONS:**

- Make sure the safety belt is secure and correctly installed.
- Make sure that a new bolt is installed.

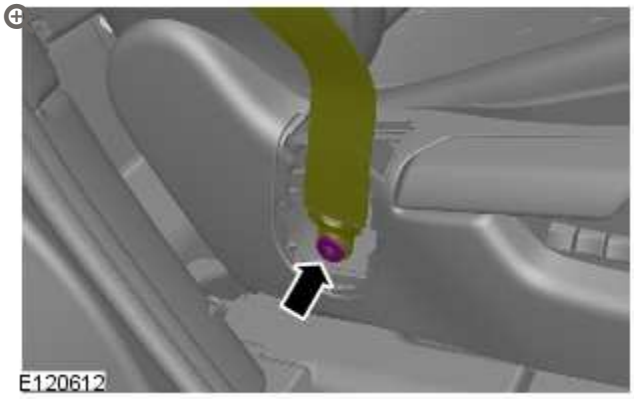

- *Torque:* **45 Nm**

4.

NOTES:

- To aid installation, the safety belt height adjuster should be at the lowest position.
- Make sure the safety belt is operating correctly.

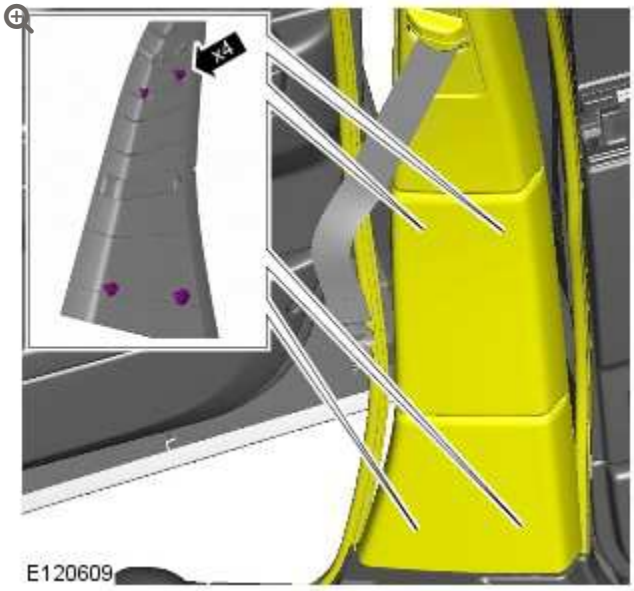

5.

CAUTION:

Make sure the safety belt is secure and correctly installed.

NOTE:

Do not disassemble further if the component is removed for access only.



6.



INSTALLATION

1. To install, reverse the removal procedure.

INTERIOR TRIM AND ORNAMENTATION

COWL SIDE TRIM PANEL

(G892837)

REMOVAL AND INSTALLATION

76.13.27	TRIM PANEL - A-PILLAR - LOWER - RENEW	ALL DERIVATIVES	0.2	USED WITHINS	+
76.13.44	TRIM FINISHER - A-PILLAR - LOWER - DRIVER SIDE - RENEW	ALL DERIVATIVES	0.2	USED WITHINS	+

REMOVAL

All vehicles

1. Remove the front scuff plate trim panel.
   For additional information, refer to: Front Scuff Plate Trim Panel (501-05, Removal and Installation).

	Left-hand drive vehicles

2.

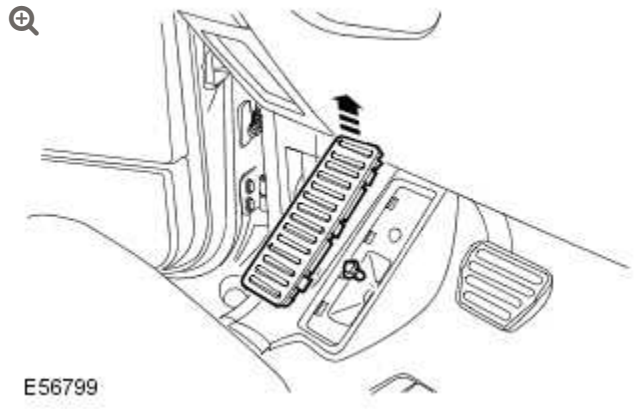

Remove the footrest trim panel.

- Release the 7 clips.

3. Remove the cowl side trim panel bolt.

	All vehicles

4.

NOTE:

Left-hand shown, right-hand similar.

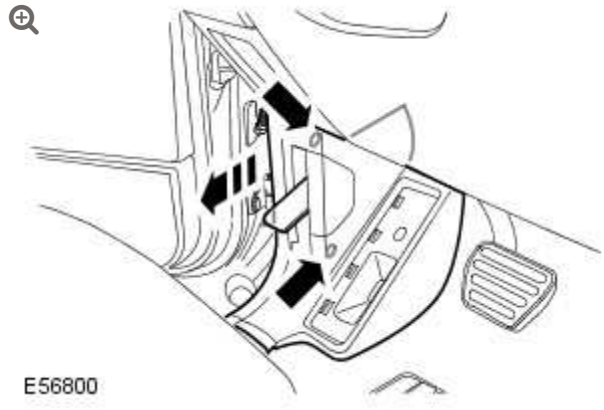

Remove the cowl side trim panel.

- Release from the 2 clips.

INSTALLATION

ℹ	All vehicles

1. Install the cowl side trim panel.
   - Secure with the 2 clips.

ℹ	Left-hand drive vehicles

2. Install the cowl side trim panel bolt.

3. Install the footrest trim panel.

ℹ	All vehicles

4. Install the front scuff plate trim panel.
   For additional information, refer to: Front Scuff Plate Trim Panel (501-05, Removal and Installation).

INTERIOR TRIM AND ORNAMENTATION

C-PILLAR LOWER TRIM PANEL - ULTIMATE, VEHICLES WITH: REAR BUSINESS SEATS (G1395443)

REMOVAL AND INSTALLATION

76.13.37	TRIM PANEL - C-PILLAR - LOWER - RENEW	ALL DERIVATIVES	0.1	USED WITHINS	+
76.13.37	TRIM PANEL - C-PILLAR - LOWER - RENEW	ALL DERIVATIVES	0.2	USED WITHINS	+

REMOVAL

NOTE:

Removal steps in this procedure may contain installation details.

1.

NOTES:

- To aid installation, the safety belt height adjuster should be at the lowest position.
- Make sure the safety belt is operating correctly.

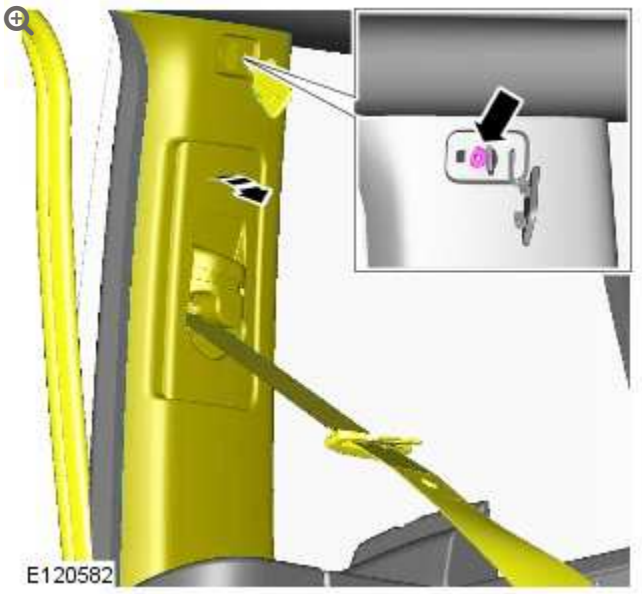

Torque: **6 Nm**

2.

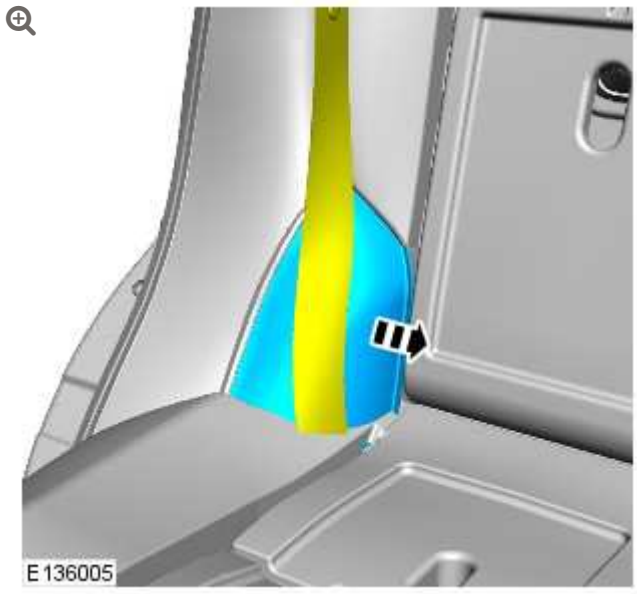

3.

CAUTION:

Take extra care not to damage the wiring harness.

NOTE:

Make sure the safety belt is secure and correctly installed.

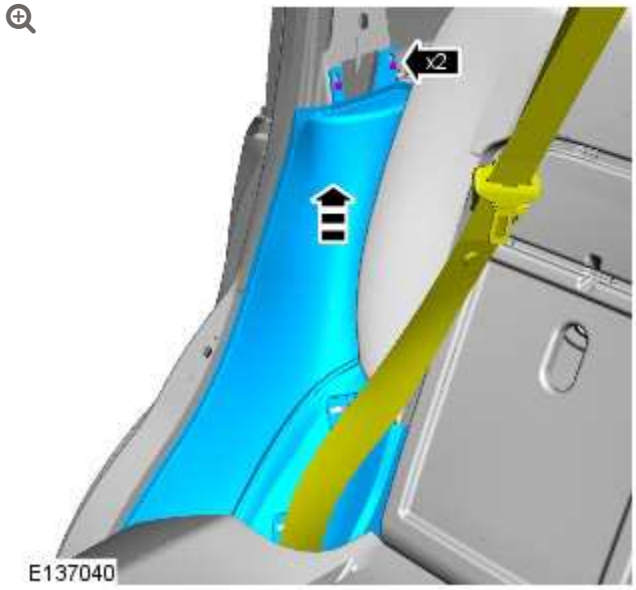

INSTALLATION

1. To install, reverse the removal procedure.

C-PILLAR LOWER TRIM PANEL (G1239867)

REMOVAL AND INSTALLATION

76.13.37	TRIM PANEL - C-PILLAR - LOWER - RENEW	ALL DERIVATIVES	0.1	USED WITHINS	+
76.13.37	TRIM PANEL - C-PILLAR - LOWER - RENEW	ALL DERIVATIVES	0.2	USED WITHINS	+

REMOVAL

NOTE:

Removal steps in this procedure may contain installation details.

1.

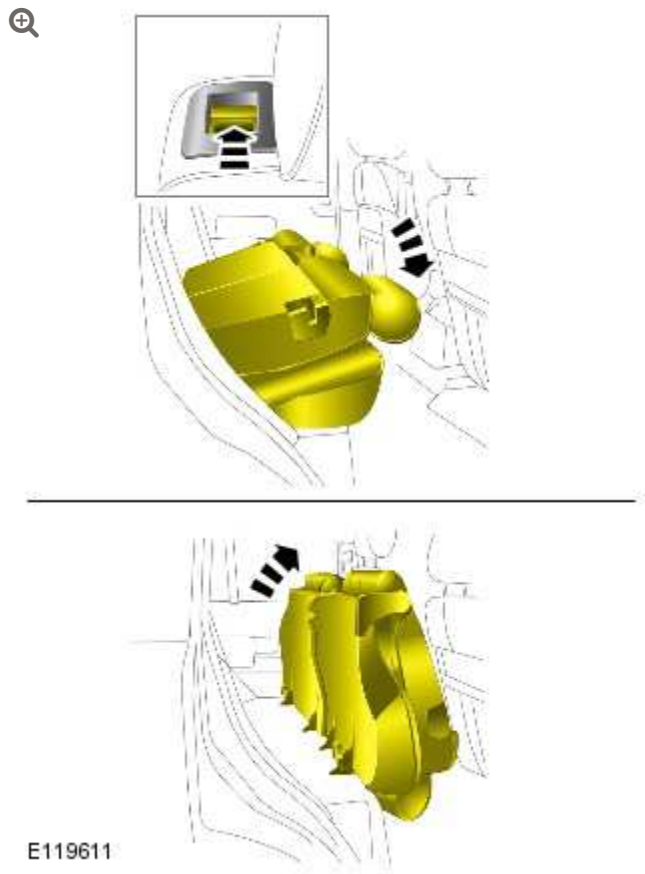

2.

NOTES:

- To aid installation, the safety belt height adjuster should be at the lowest position.
- Make sure the safety belt is operating correctly.

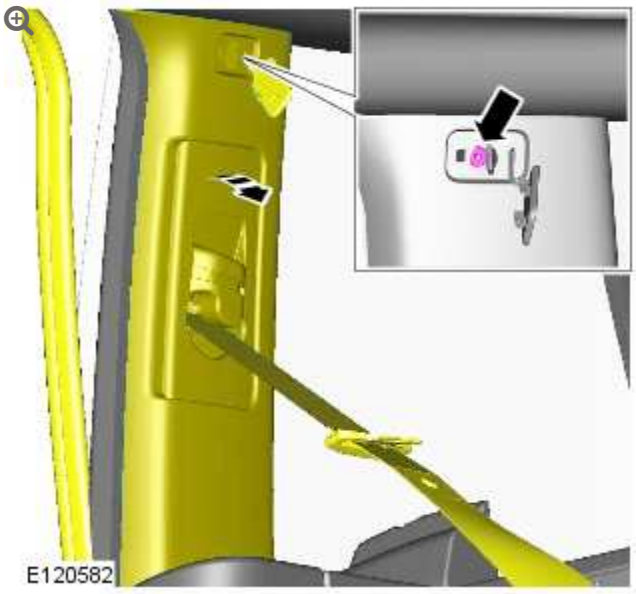

Torque: **6 Nm**

3.

NOTE:

Make sure the safety belt is secure and correctly installed.

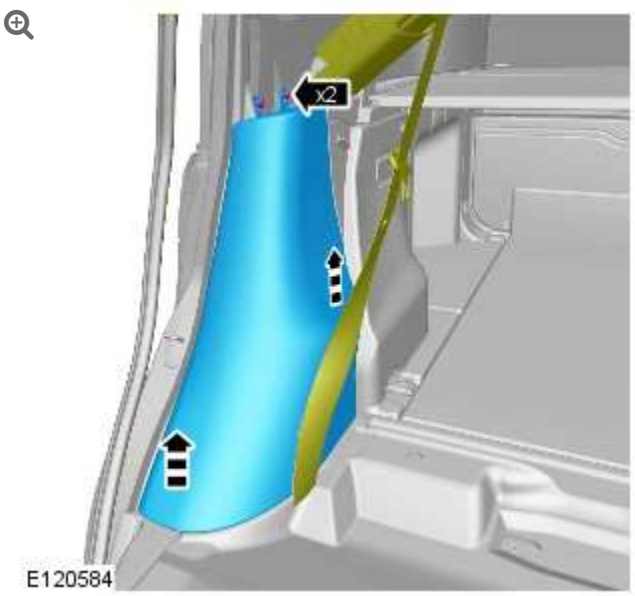

INSTALLATION

1. To install, reverse the removal procedure.

C-PILLAR UPPER TRIM PANEL - ULTIMATE, VEHICLES WITH: REAR BUSINESS SEATS (G1395442)

REMOVAL AND INSTALLATION

76.13.35	TRIM PANEL - C-PILLAR - UPPER - RENEW	ALL DERIVATIVES	0.2	USED WITHINS	+

REMOVAL

NOTE:

Removal steps in this procedure may contain installation details.

1.

NOTES:

- To aid installation, the safety belt height adjuster should be at the lowest position.
- Make sure the safety belt is operating correctly.

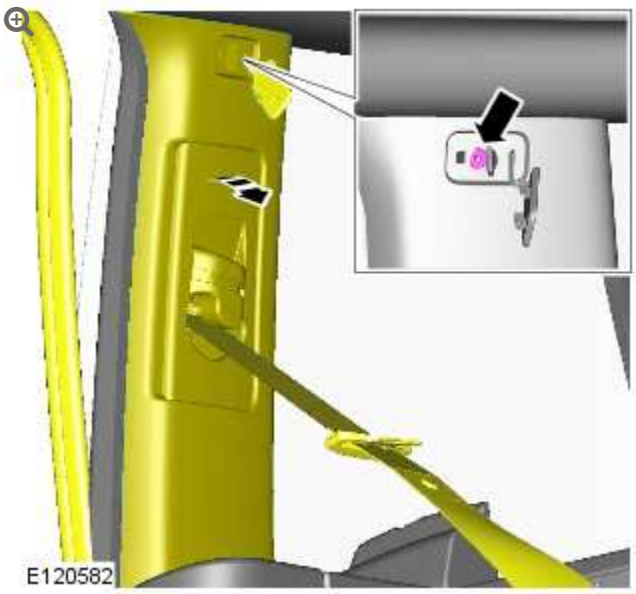

Torque: **6 Nm**

2.

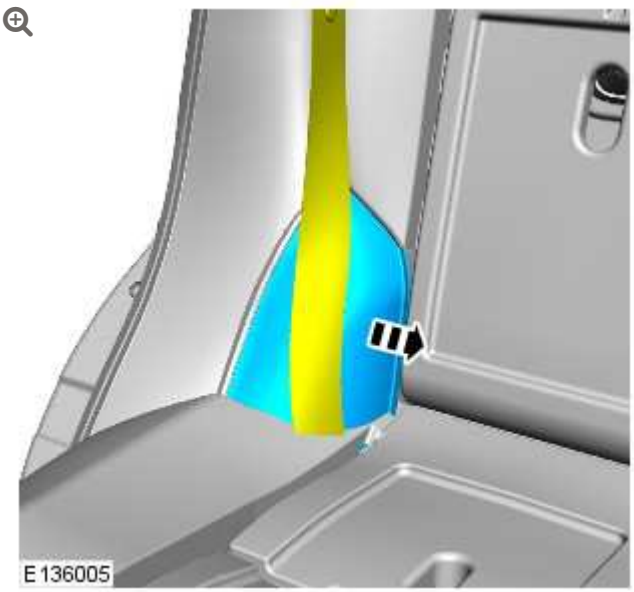

3.

CAUTION:

Take extra care not to damage the wiring harness.

NOTE:

Make sure the safety belt is secure and correctly installed.

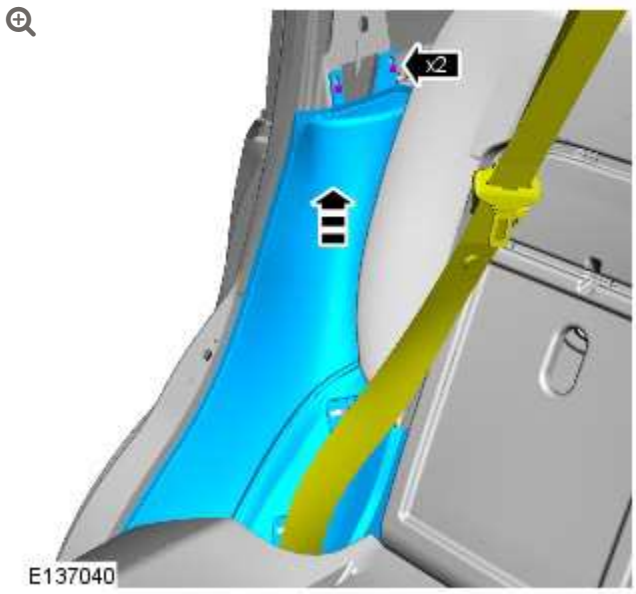

4.

WARNING:

Make sure that the safety belt anchor is correctly installed.

CAUTION:

Make sure that a new bolt is installed.

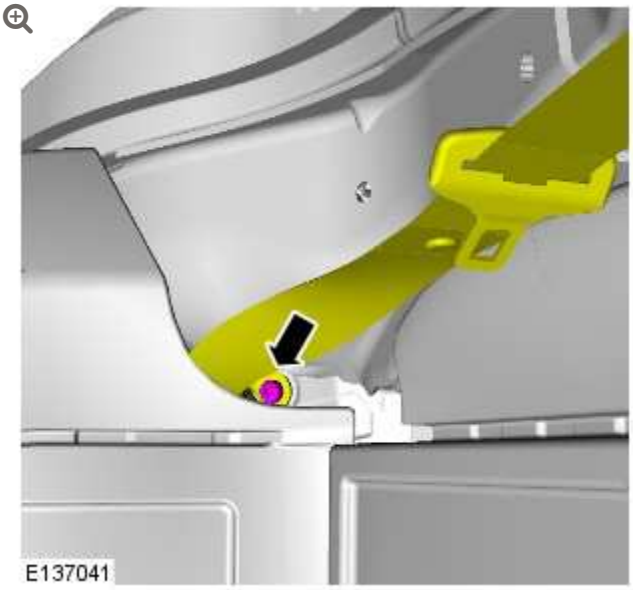

Torque: **45 Nm**

5. **CAUTION:**

Make sure the safety belt is secure and correctly installed.



INSTALLATION

1. To install, reverse the removal procedure.

INTERIOR TRIM AND ORNAMENTATION

ENGINE COVER – V8 5.0L PETROL/V8 S/C 5.0L PETROL (G1224253)

REMOVAL AND INSTALLATION

12.30.50	ACOUSTIC COVER – ENGINE – RENEW	5000 CC, AJ V8	0.1	USED WITHINS	+
12.30.50	ACOUSTIC COVER – ENGINE – RENEW	AJ V8, SUPERCHARGED	0.3	USED WITHINS	+

REMOVAL

NOTE:

Removal steps in this procedure may contain installation details.

1.

NOTE:

Some variation in the illustrations may occur, but the essential information is always correct.

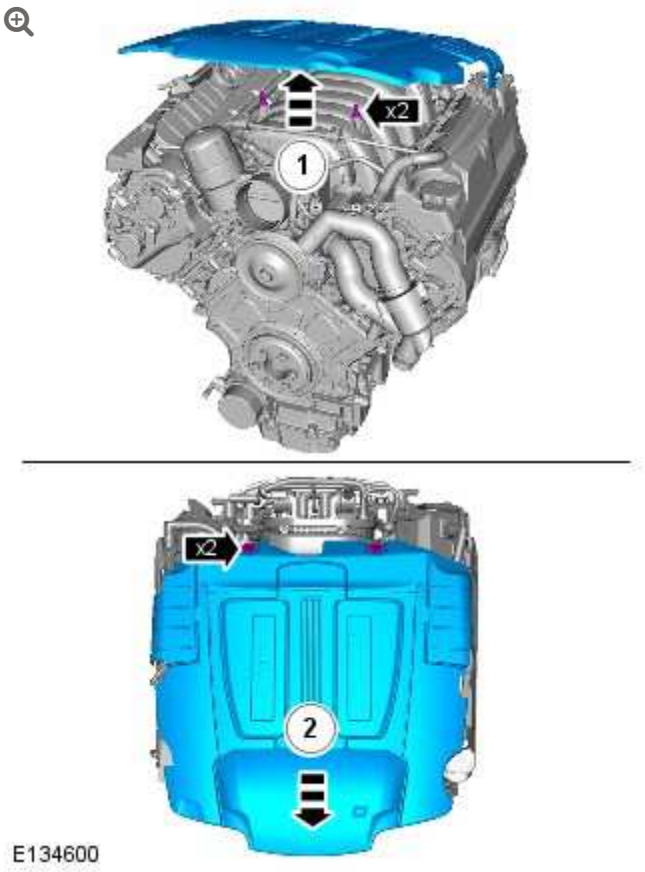

INSTALLATION

1. To install, reverse the removal procedure.

INTERIOR TRIM AND ORNAMENTATION

FRONT DOOR TRIM PANEL – ULTIMATE (G1569075)

REMOVAL AND INSTALLATION

76.34.01	TRIM PANEL – FRONT DOOR – LEFT/EACH – RENEW	ALL DERIVATIVES	0.5	USED WITHINS	+

REMOVAL

1. Disconnect the battery ground cable.
   For additional information, refer to: Specifications (414-00 Battery and Charging System - General Information, Specifications).

2.

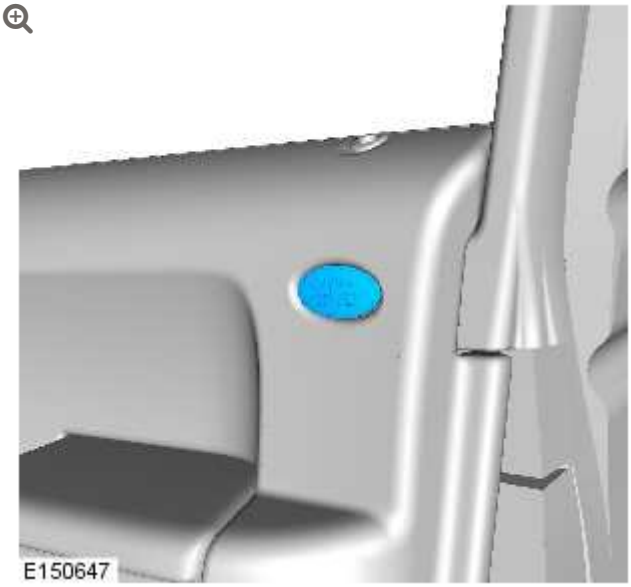

3.

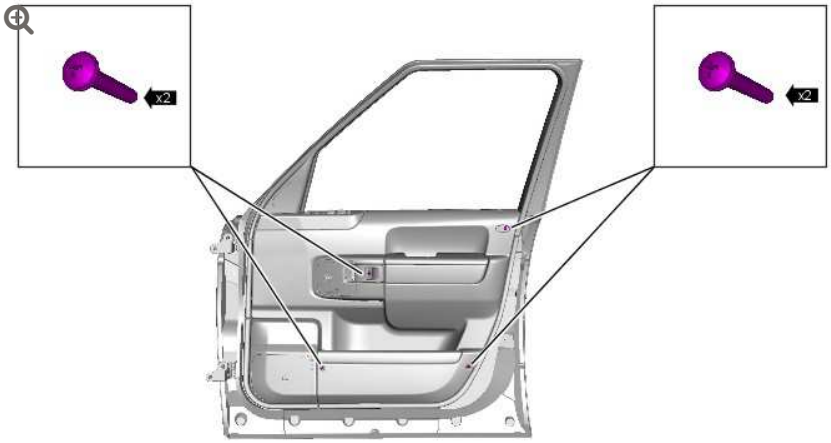

E150648

4.

CAUTION:

Carefully release the door trim panel retaining clips.

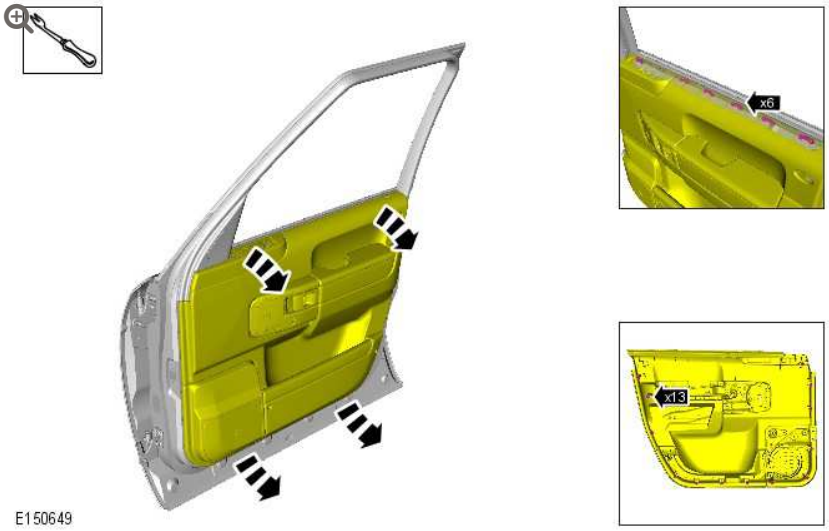

5.

CAUTION:

Make sure that the top of the door trim panel is clear of the weather strip.

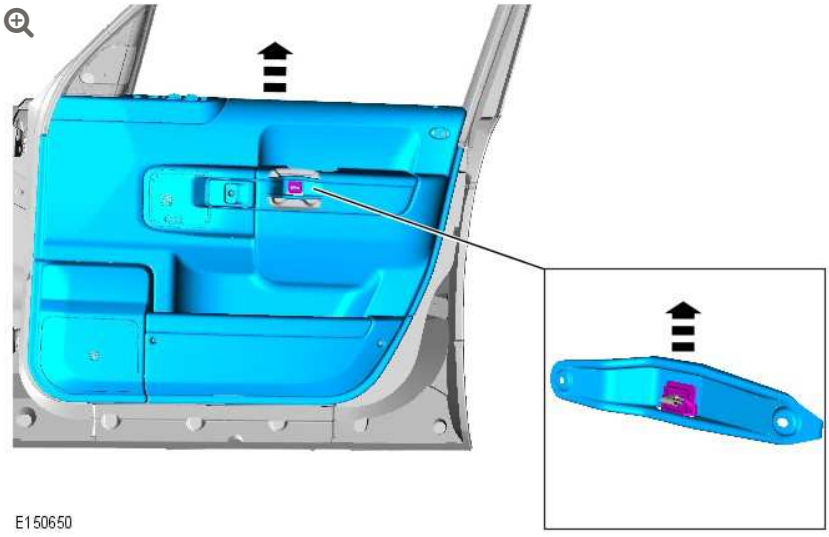

6.

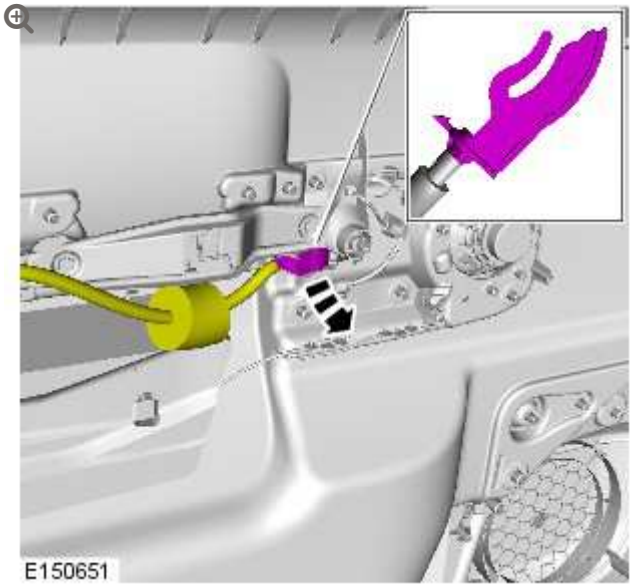

7.

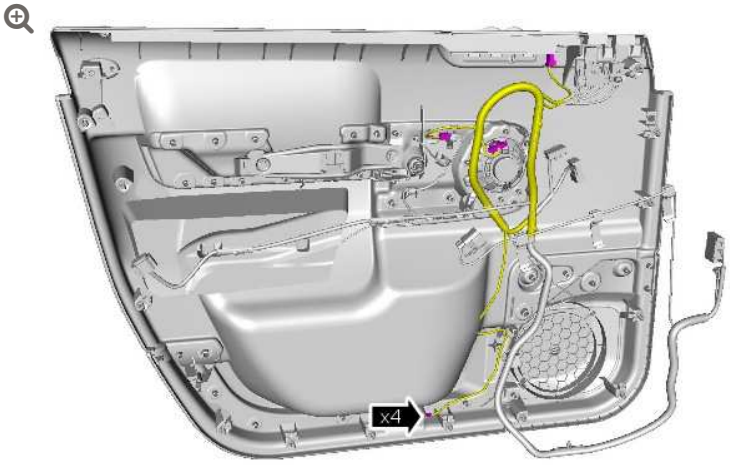

E150652

8. **NOTE:**

Do not disassemble further if component is removed for access only.

9.

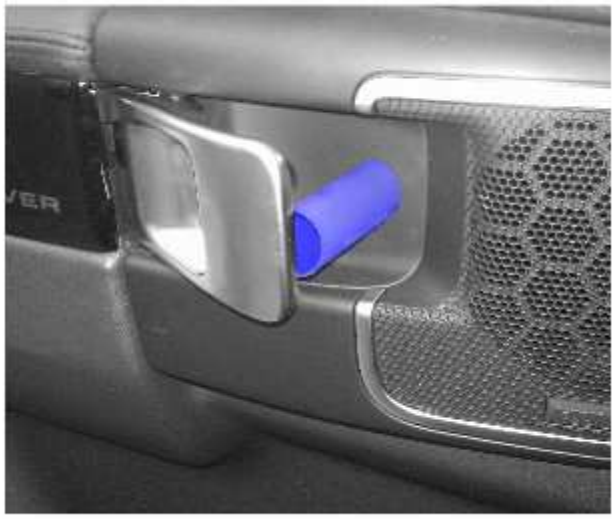

E150794

10.

NOTE:

Using two suitable pieces of laminated plastic, slide under the veneer at the areas illustrated, to aid removal of the component



E150795

11.

CAUTIONS:

- Do not use tools during this operation, removal of the component must be carried out by hand.
- Do not use excessive force to release the component.



12.

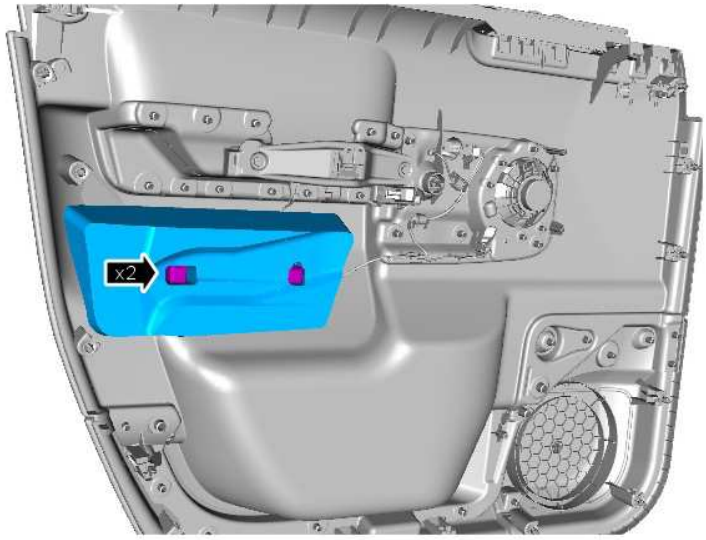

13.

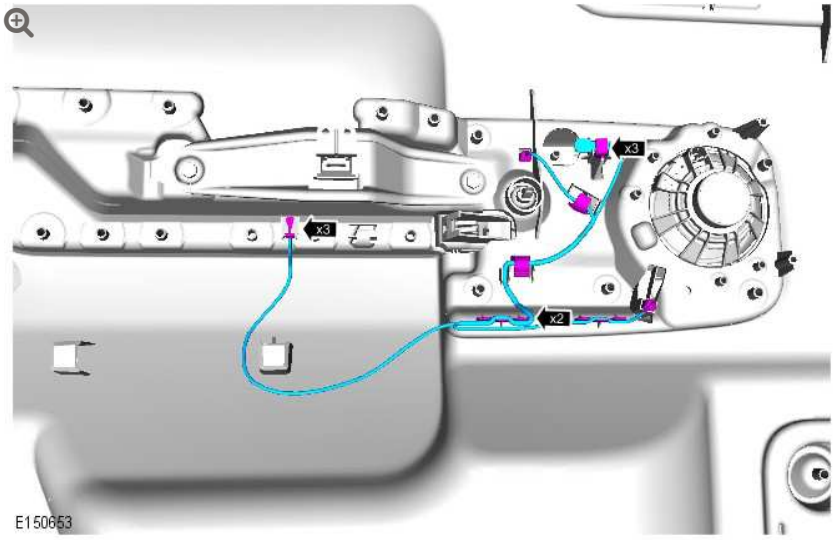

14.

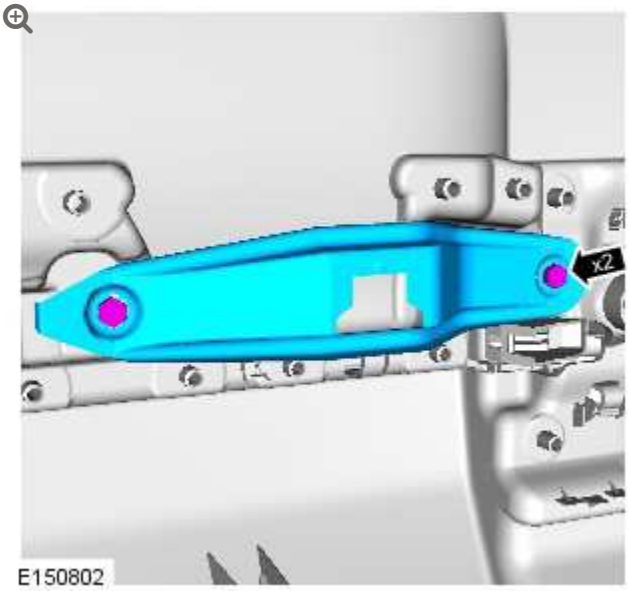

15.

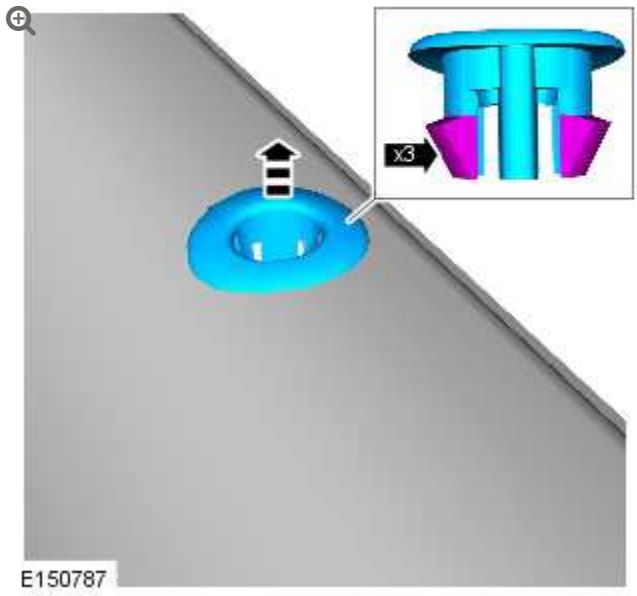

16.

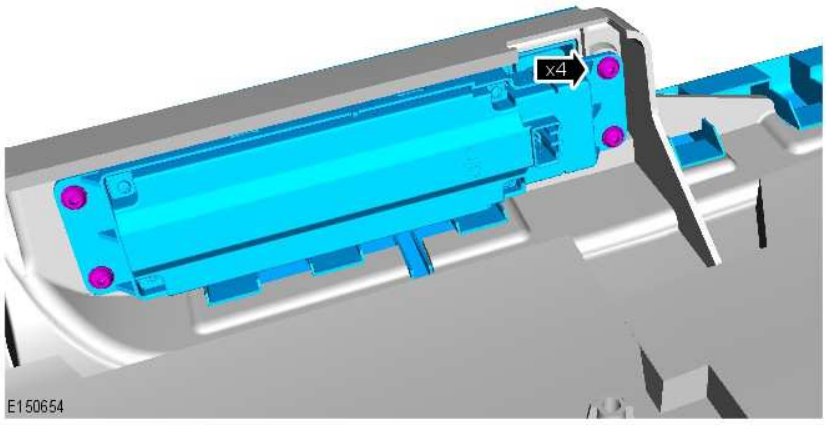

17.

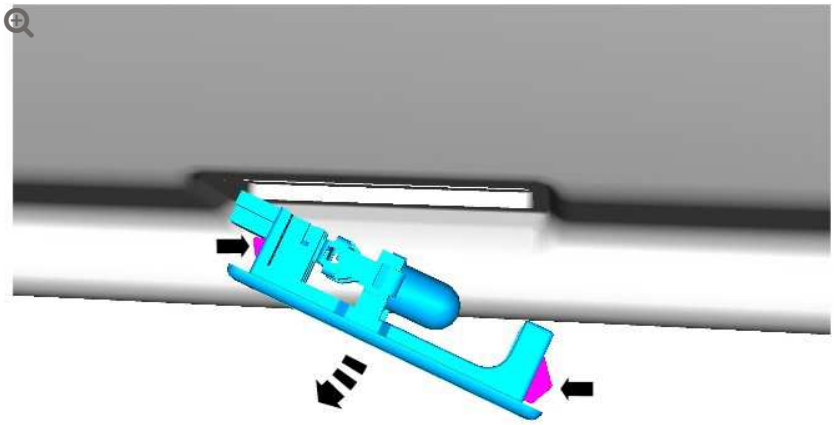

E150661

18.

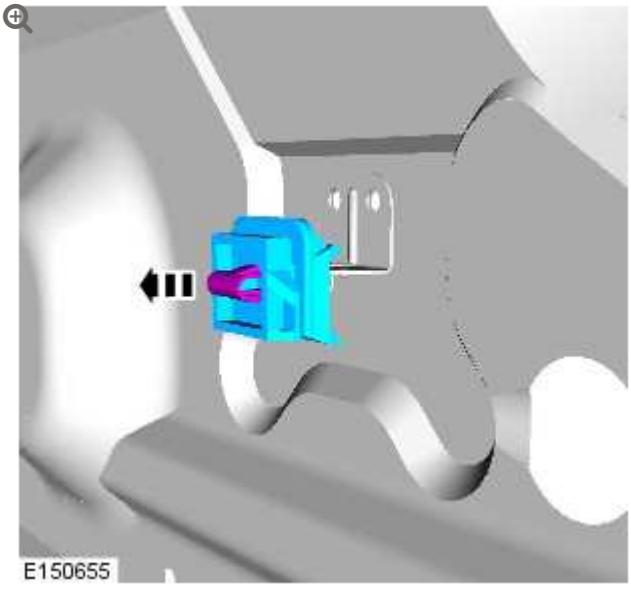

INSTALLATION

1.

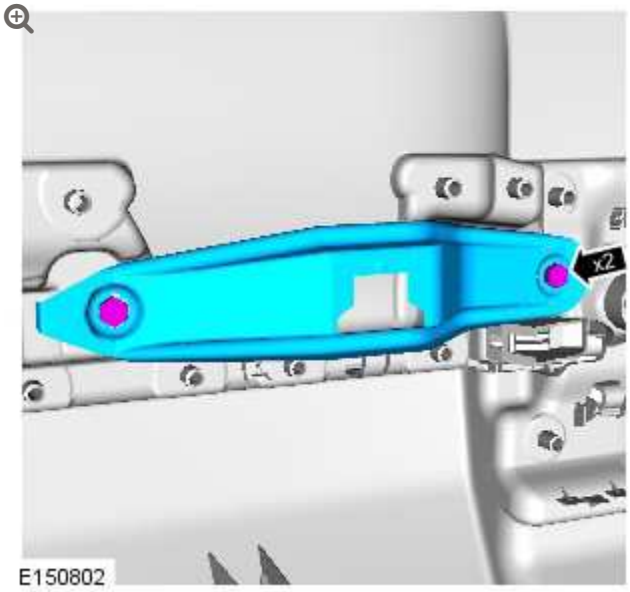

2.

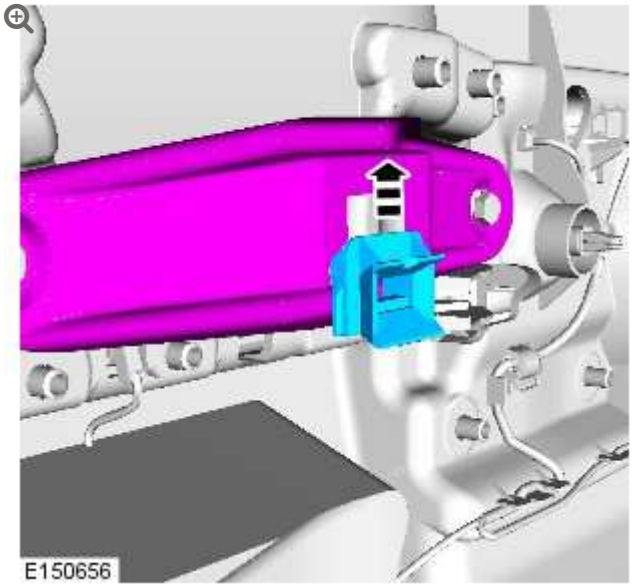

3.

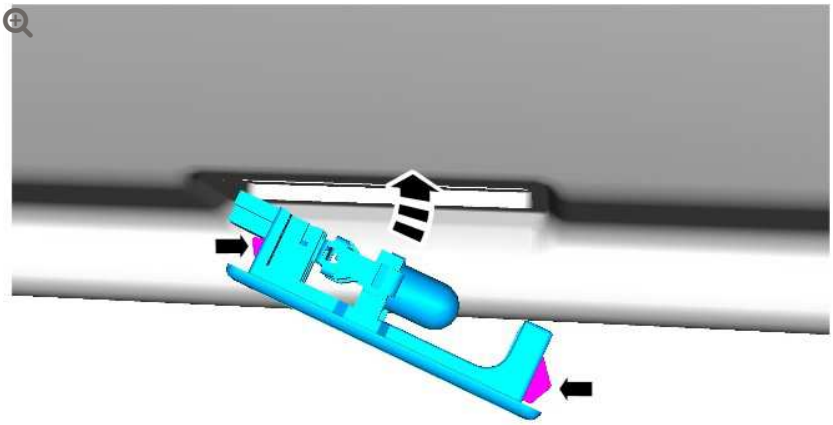

E150662

4.

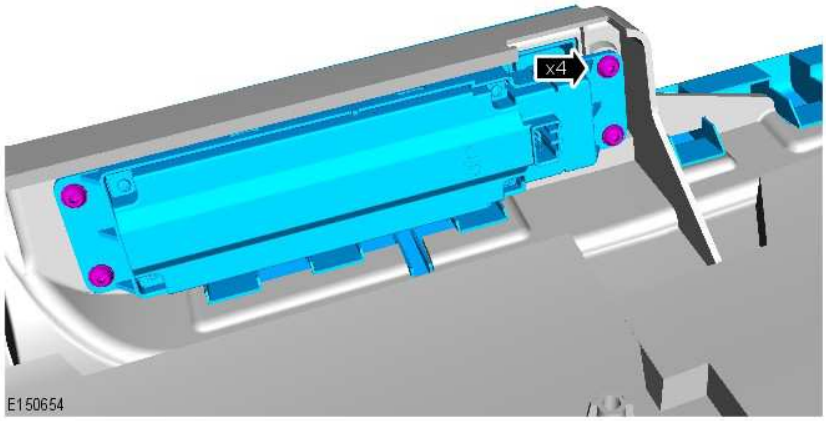

E150654

5.

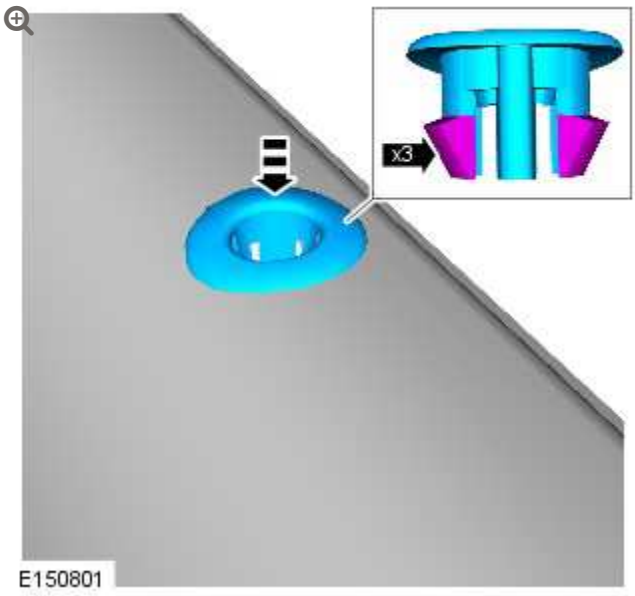

6.

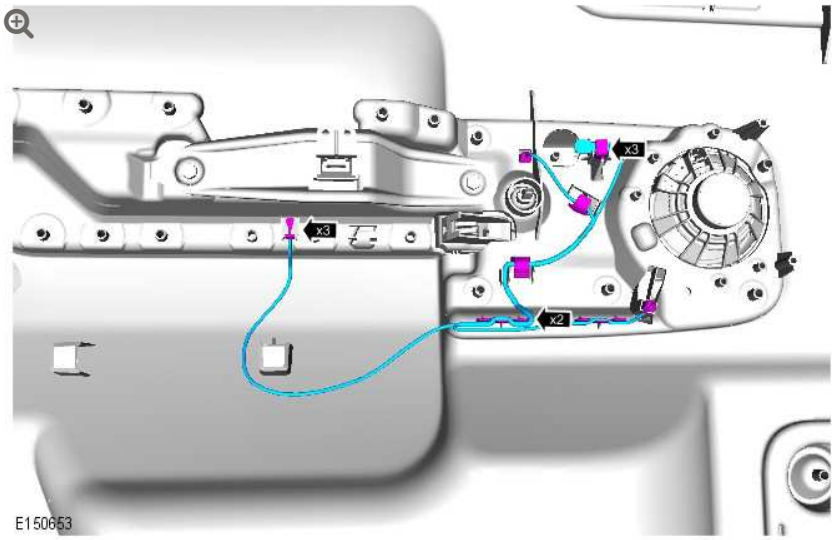

7.

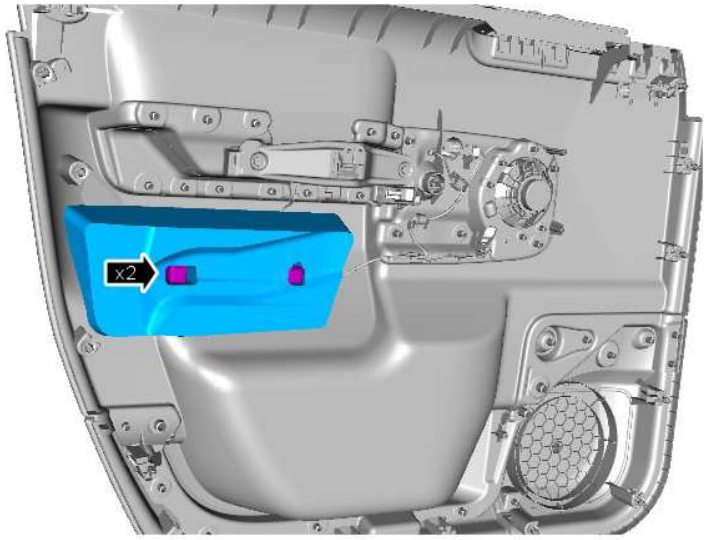

E150663

8.

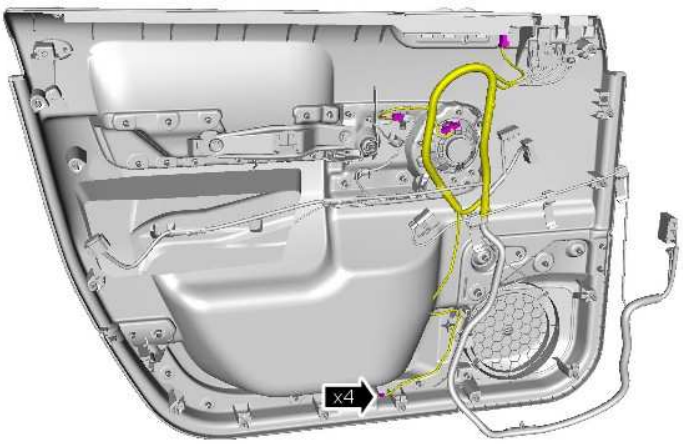

E150652

9.

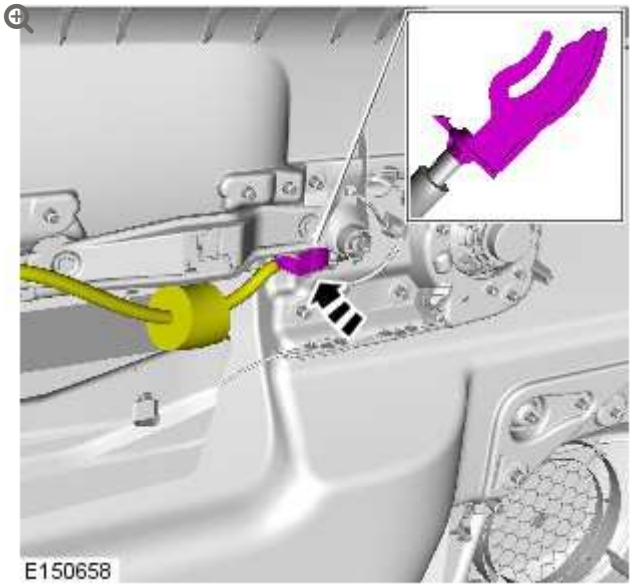

10.

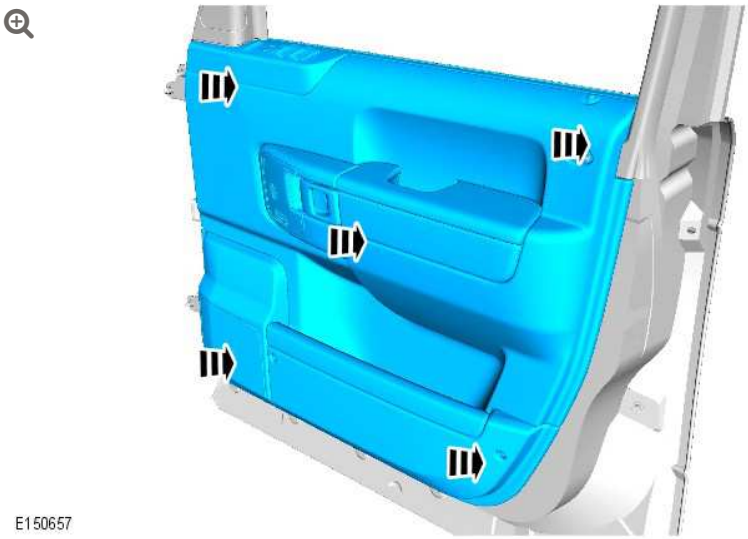

11.

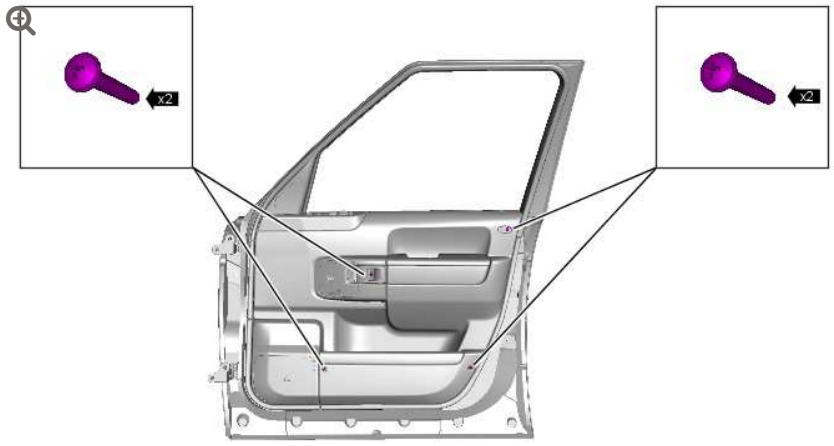

E150648

12.

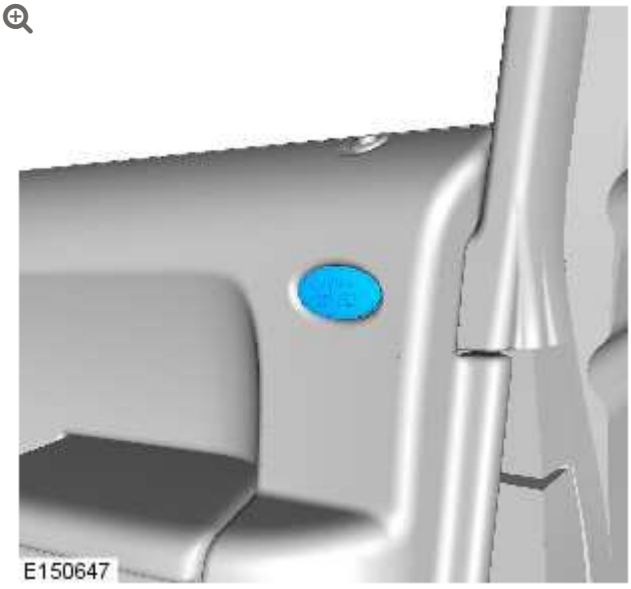

13.

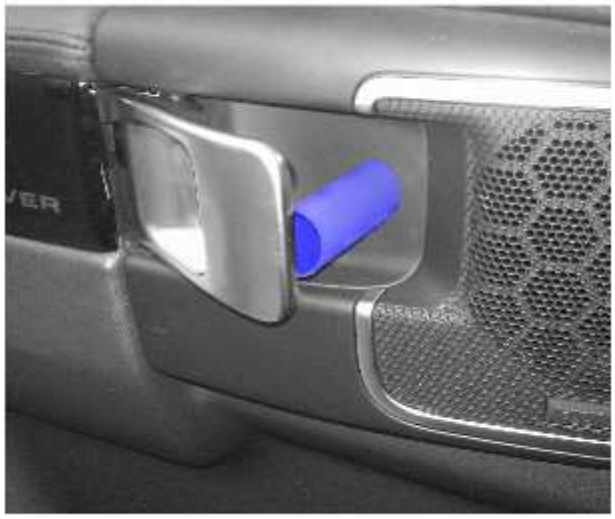

E150794

14.

CAUTION:

Do not use excessive force to install the component.



E150828

INTERIOR TRIM AND ORNAMENTATION

FRONT DOOR TRIM PANEL

(G1569075)

REMOVAL AND INSTALLATION

76.34.01	TRIM PANEL - FRONT DOOR - LEFT/EACH - RENEW	ALL DERIVATIVES	0.5	USED WITHINS	+

REMOVAL

1. Disconnect the battery ground cable.
   For additional information, refer to: Specifications (414-00 Battery and Charging System - General Information, Specifications).

2.

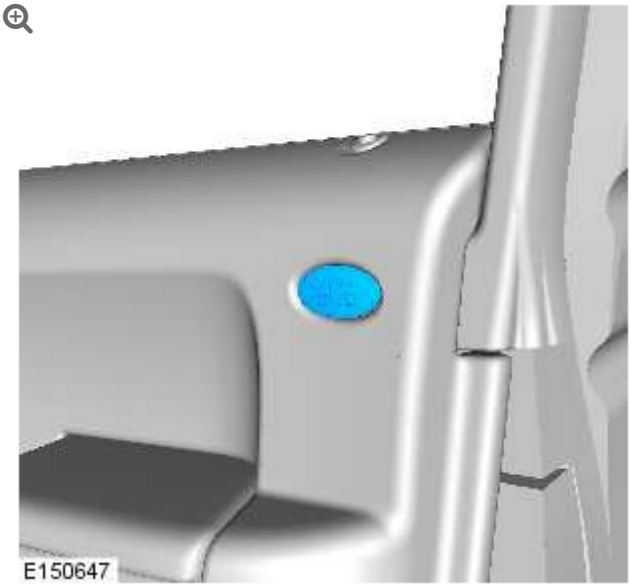

3.

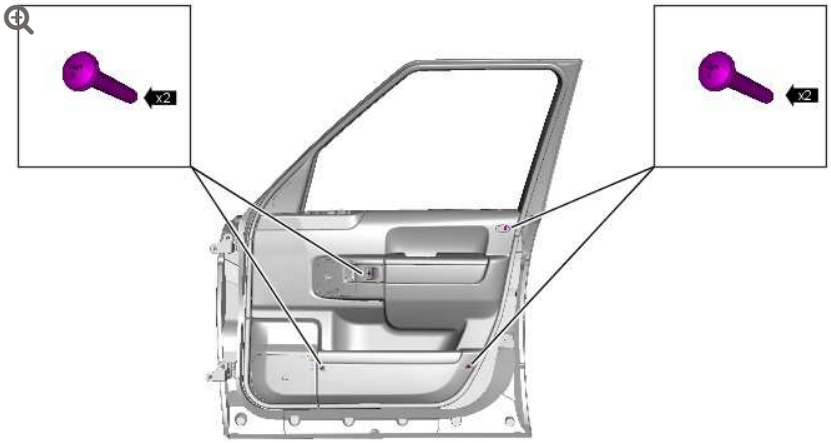

E150648

4.

CAUTION:

Carefully release the door trim panel retaining clips.

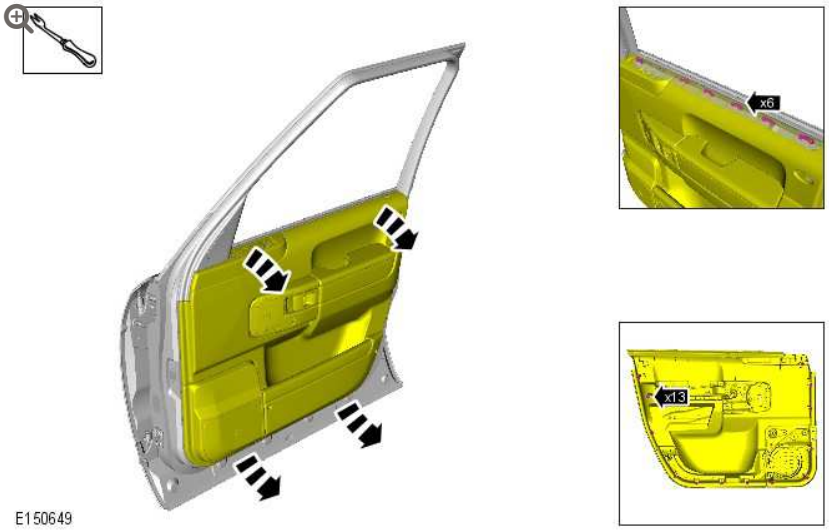

5.

CAUTION:

Make sure that the top of the door trim panel is clear of the weather strip.

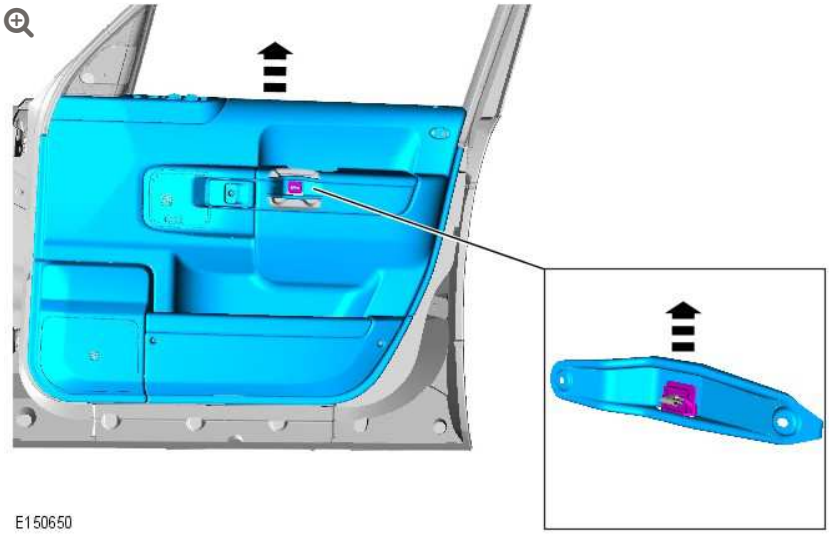

6.

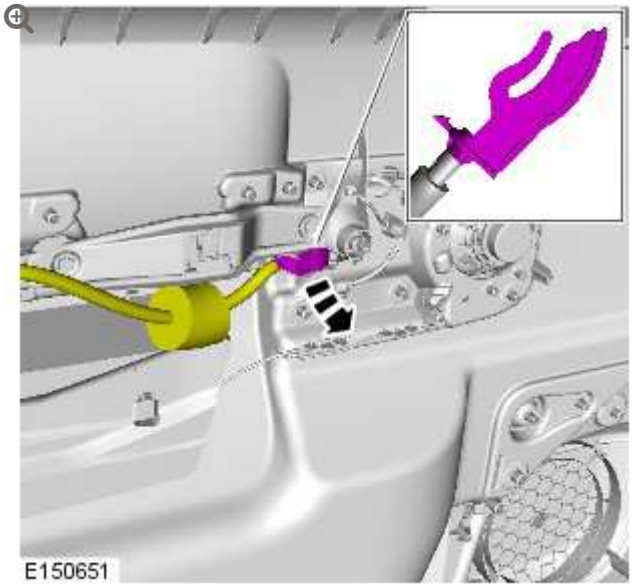

7.

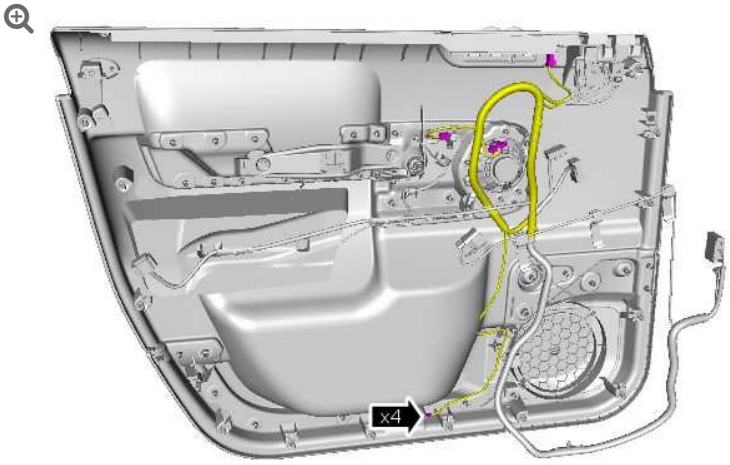

E150652

8. **NOTE:**

Do not disassemble further if component is removed for access only.

9.

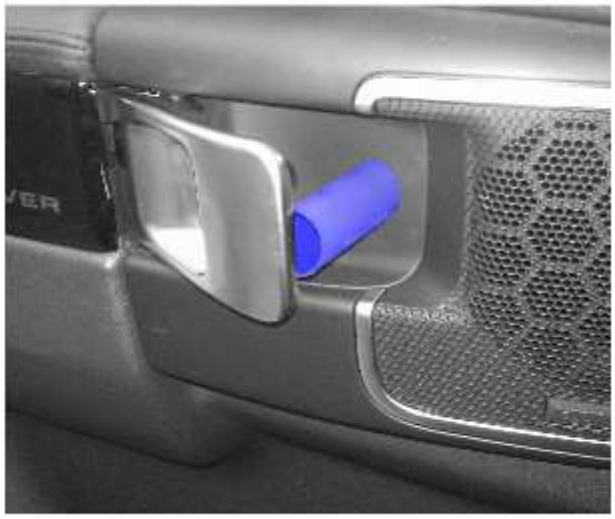

E150794

10.

NOTE:

Using two suitable pieces of laminated plastic, slide under the veneer at the areas illustrated, to aid removal of the component



E150795

11.

CAUTIONS:

- Do not use tools during this operation, removal of the component must be carried out by hand.
- Do not use excessive force to release the component.



12.

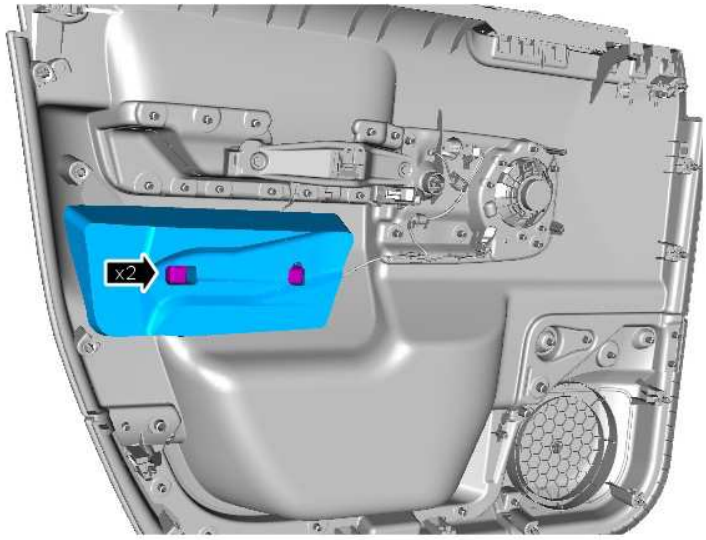

13.

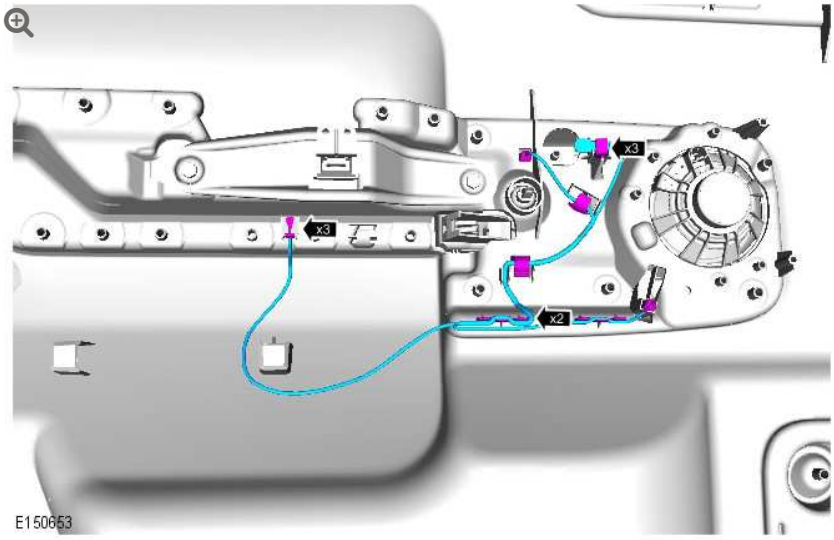

14.

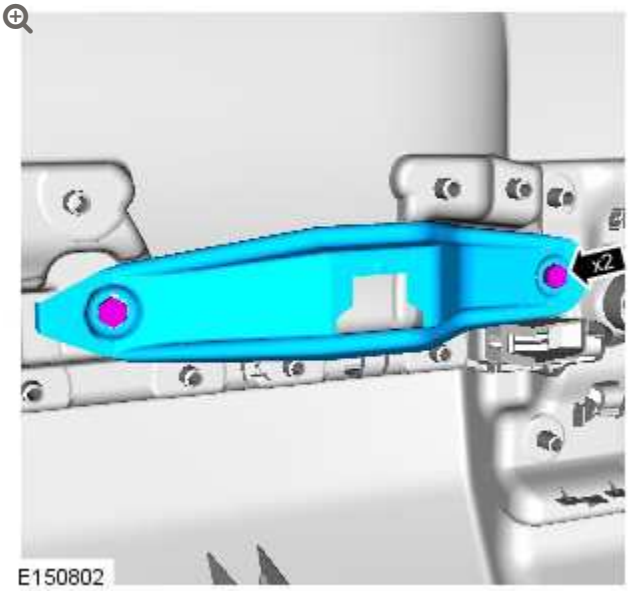

15.

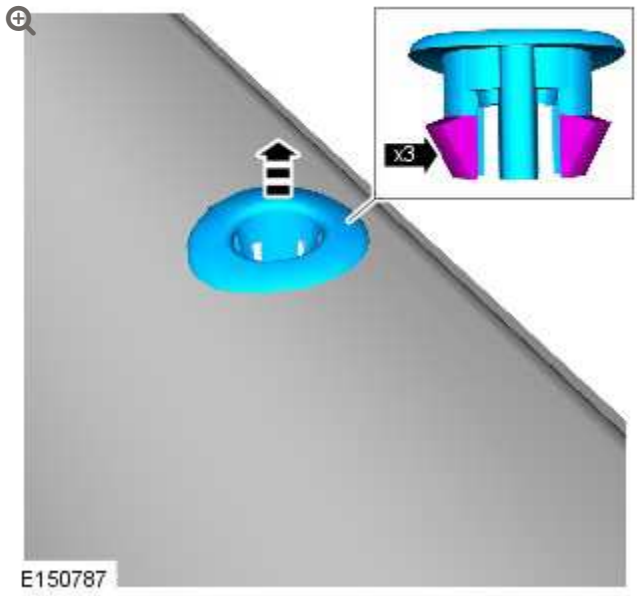

16.

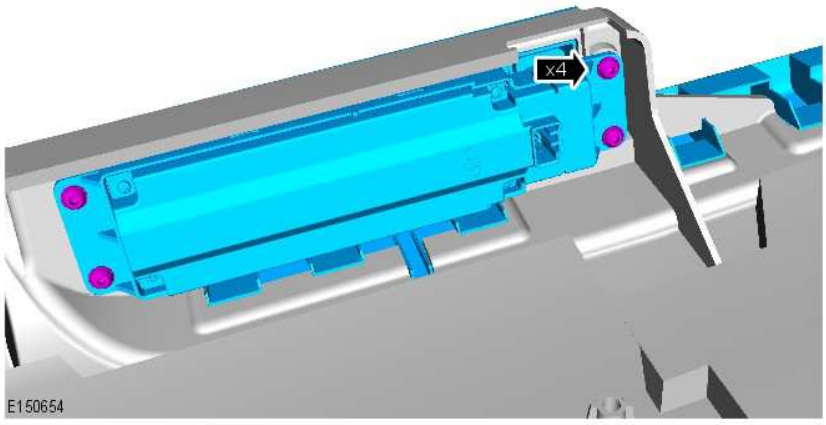

17.

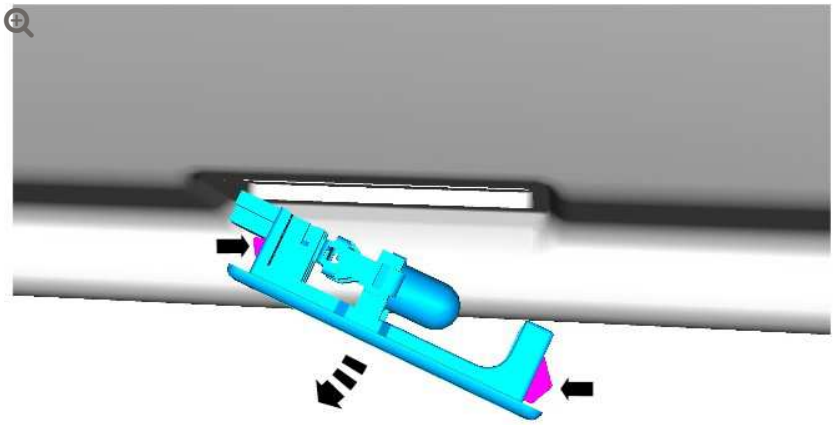

E150661

18.

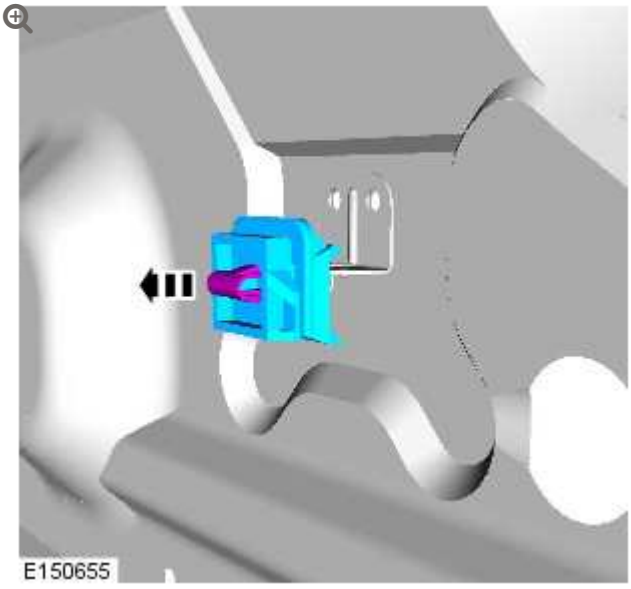

INSTALLATION

1.

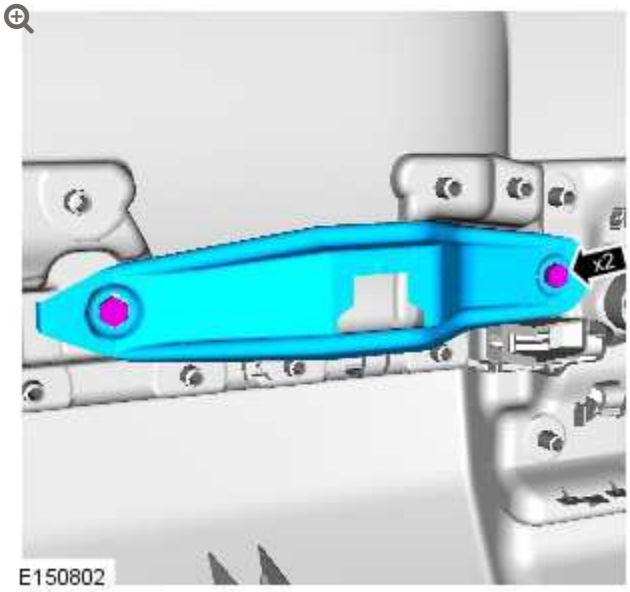

2.

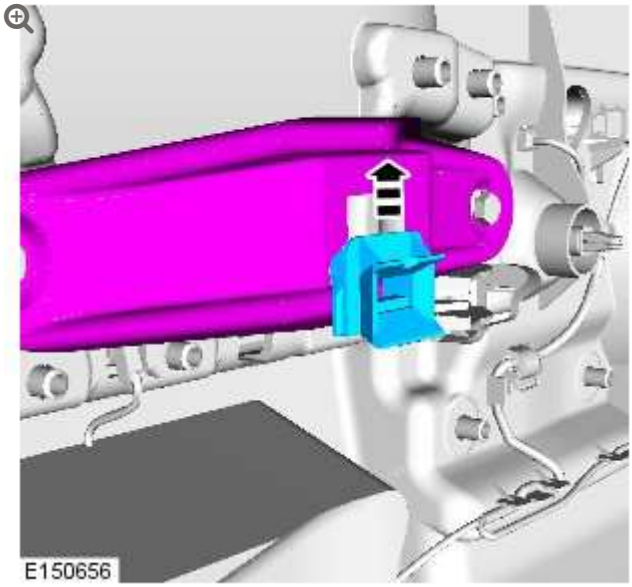

3.

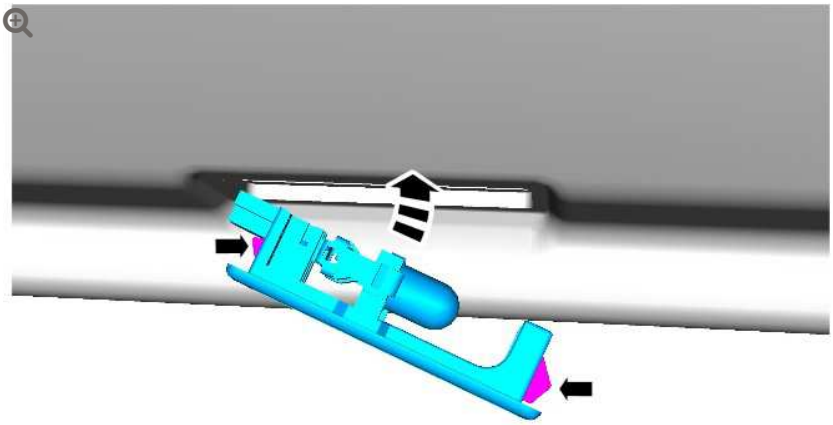

E150662

4.

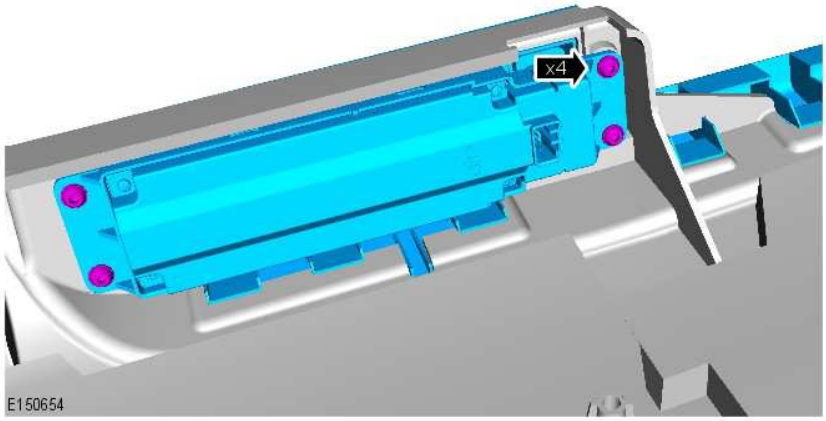

E150654

5.

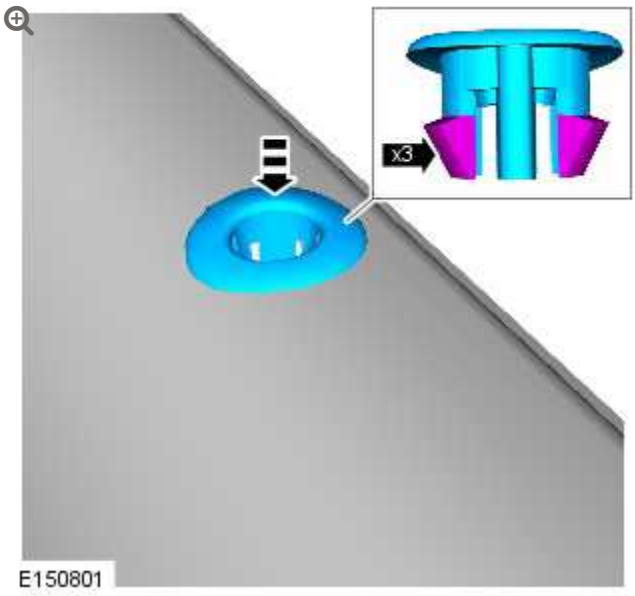

6.

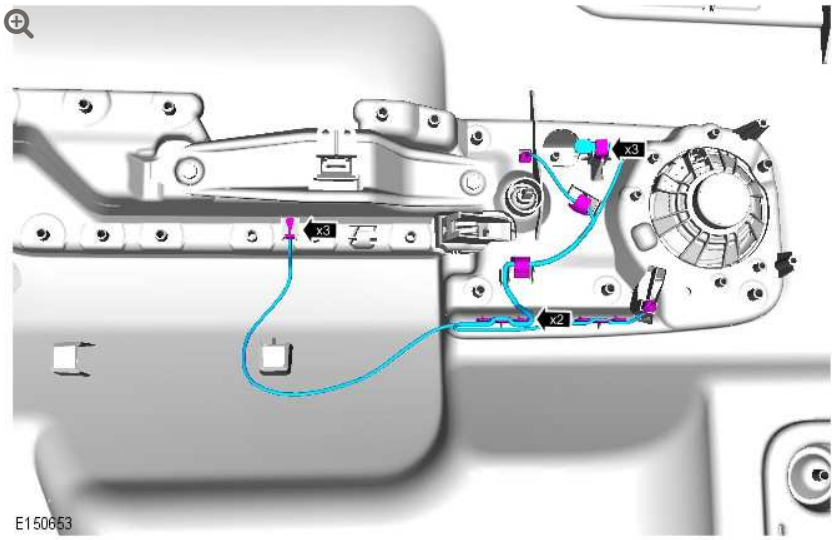

7.

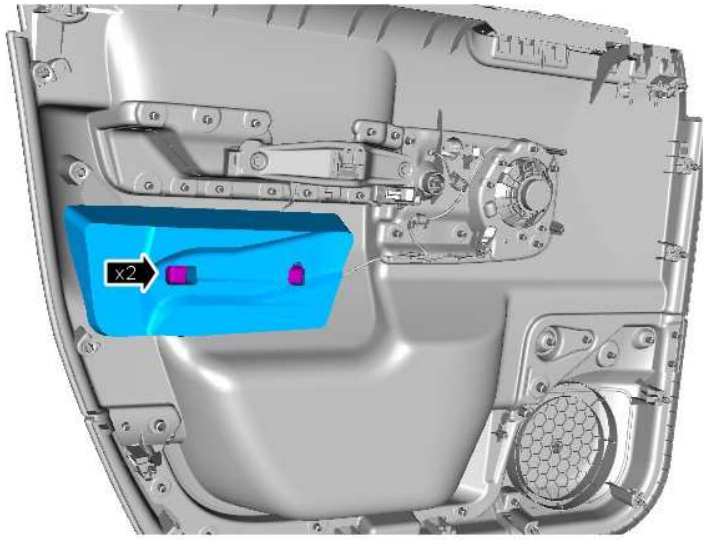

E150663

8.

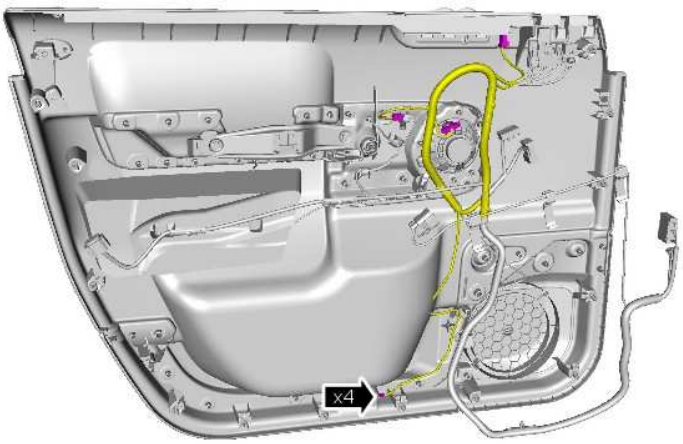

E150652

9.

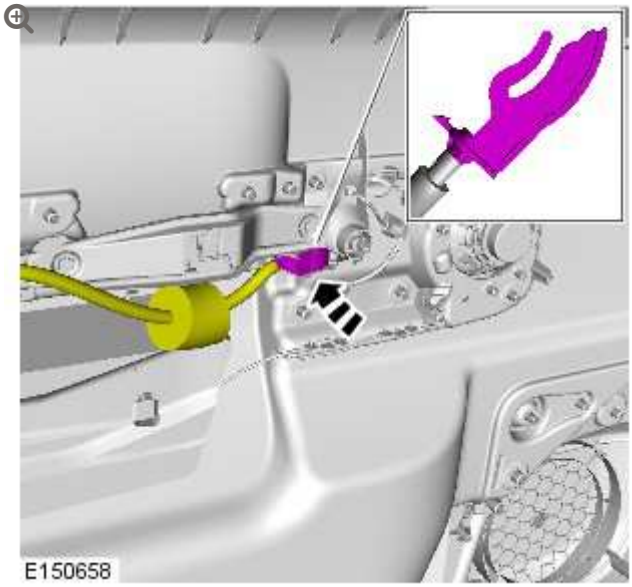

10.

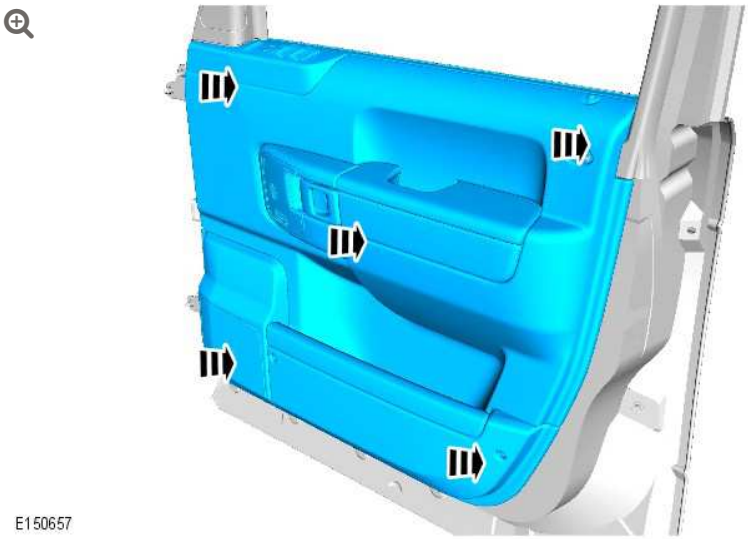

11.

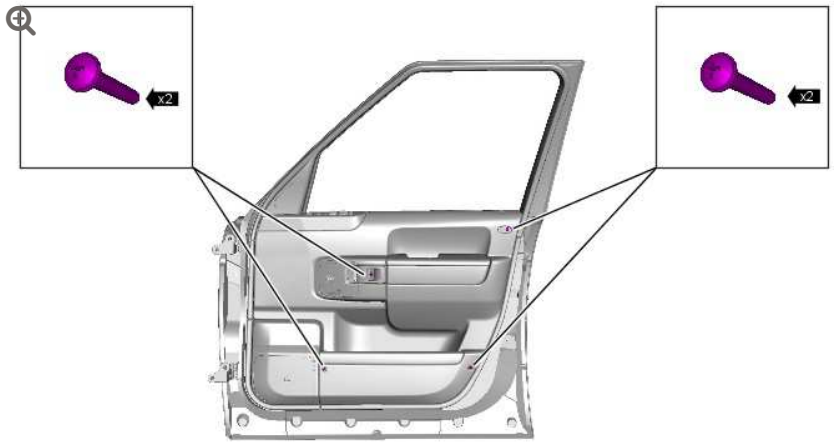

E150648

12.

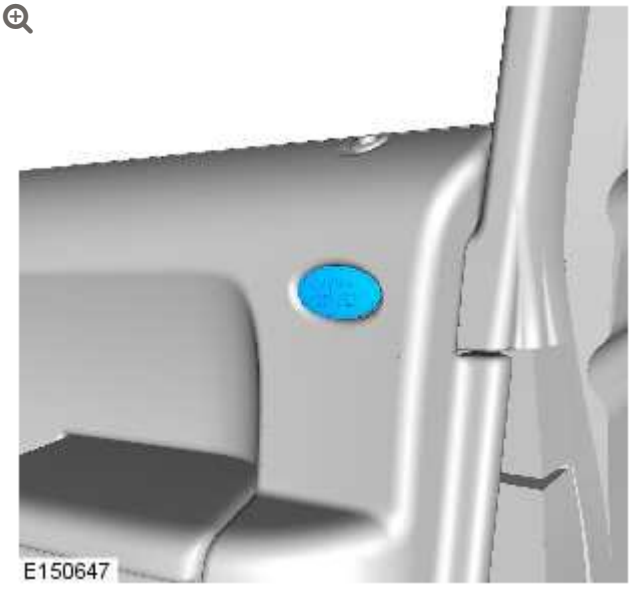

13.

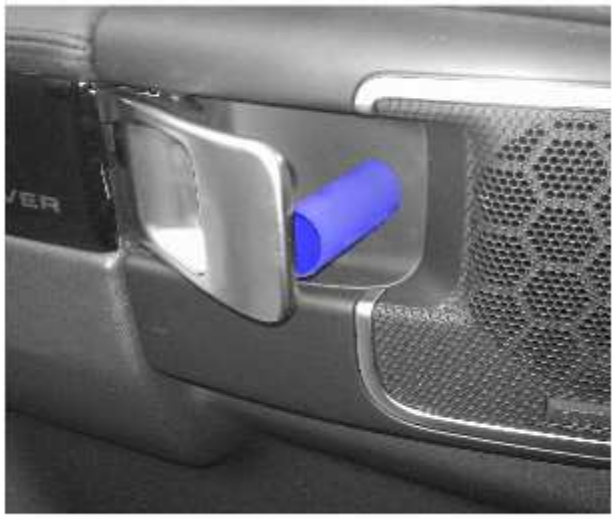

E150794

14.

CAUTION:

Do not use excessive force to install the component.



E150828

2012.0 RANGE ROVER (LM), 501-05

INTERIOR TRIM AND ORNAMENTATION

FRONT DOOR TRIM VENEER (G1569071)

REMOVAL AND INSTALLATION

REMOVAL

1.

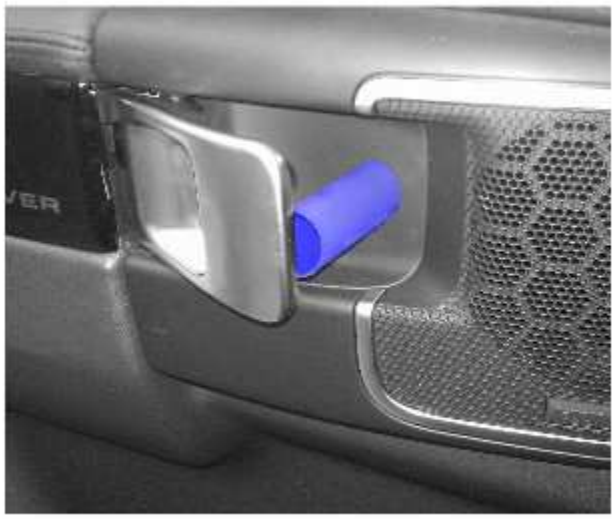

E150794

2.

NOTE:

Using two suitable pieces of laminated plastic, slide under the veneer at the areas illustrated, to aid removal of the component



3.

CAUTIONS:

- Do not use tools during this operation, removal of the component must be carried out by hand.
- Do not use excessive force to release the component.



E150796

INSTALLATION

1.

CAUTION:

Do not use excessive force to install the component.


E150828

INTERIOR TRIM AND ORNAMENTATION

FRONT SCUFF PLATE TRIM PANEL (G892835)

REMOVAL AND INSTALLATION

76.49.17	RETAINER - CARPET - FRONT - EACH - RENEW	ALL DERIVATIVES	0.1	USED WITHINS	+

REMOVAL

1. **NOTE:**

Left-hand shown, right-hand similar.

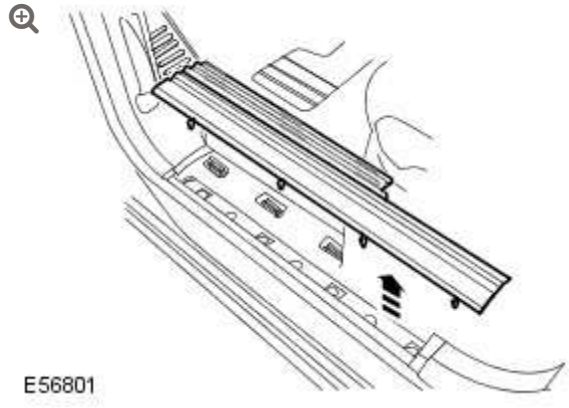

Remove the front scuff plate trim panel.

- Release the 7 clips.

2. **NOTE:**

   Do not disassemble further if the component is removed for access only.

   Remove the 4 clips from the front scuff plate trim panel.

INSTALLATION

1. To install, reverse the removal procedure.

HEADLINER – ULTIMATE, VEHICLES WITH: REAR BUSINESS SEATS (G1395448)

REMOVAL AND INSTALLATION

76.64.15	HEADLINER – SUNSHINE/SLIDING ROOF CONDITION – RENEW	ALL DERIVATIVES	3.1	USED WITHINS	+

REMOVAL

	Vehicles with roof opening panel

1. Remove the roof opening panel shield.
   For additional information, refer to: Roof Opening Panel Shield (501-17, Removal and Installation).

2.

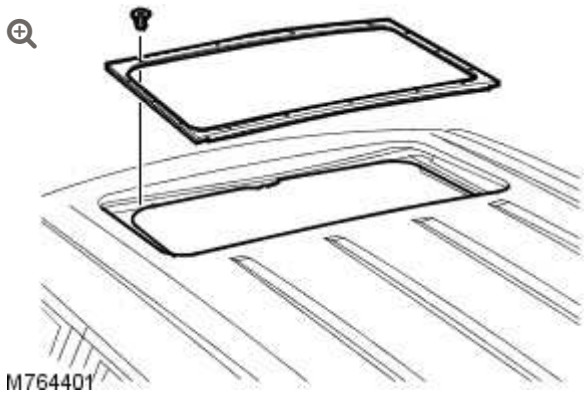

Remove the roof opening panel securing plate.

- Remove the 15 screws.

3. **NOTE:**

   All vehicles.

   Remove the RH rear seat.
   For additional information, refer to: Rear Seat - Vehicles With: Rear Business Seats (501-10, Removal and Installation).

4. Remove the 4 door aperture weatherstrips.

5. **NOTE:**

   Right-hand shown, left-hand similar.

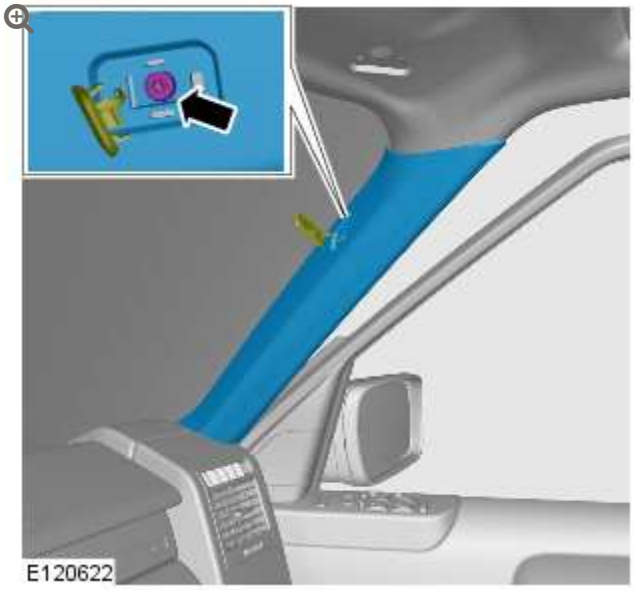

Remove the A-pillar trim panels.

- Remove the 2 Torx screws.

6. Remove the LH B-pillar upper trim panel.
   For additional information, refer to: B-Pillar Trim Panel (501-05, Removal and Installation).

7. Position the RH front seat fully forwards.

8. **NOTES:**

   - Release the front safety belt lower anchor bolt cover clip upwards and away from the front seat base side trim panel.
   - Raise the seat base for access.

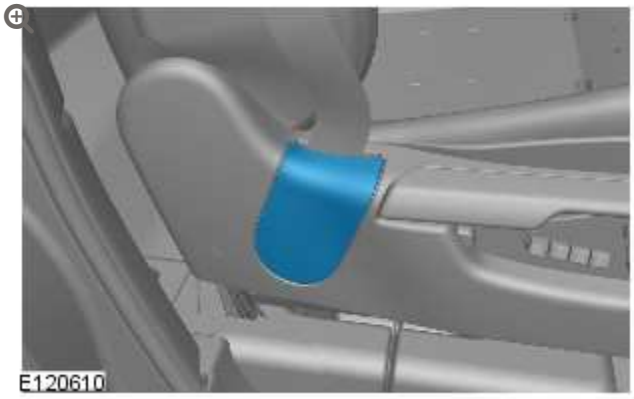

Remove the safety belt lower anchor bolt cover from the RH front seat.

- Carefully release the clip from behind the RH front seat base side trim panel.
- Remove the cover.

9.

NOTE:

Lower the seat base for access.

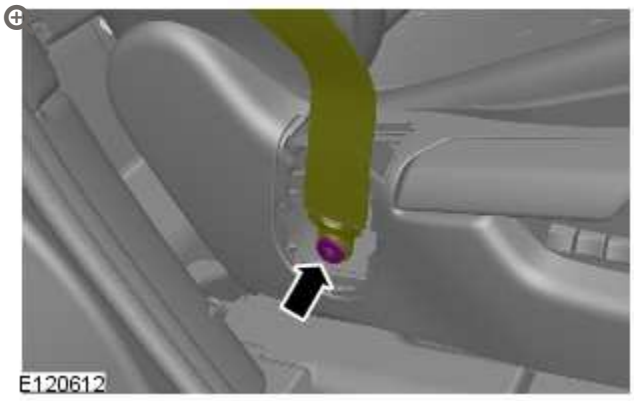

Release the safety belt lower anchor from the RH front seat.

- Remove and discard the bolt.

10.

NOTE:

Right-hand shown, left-hand similar.

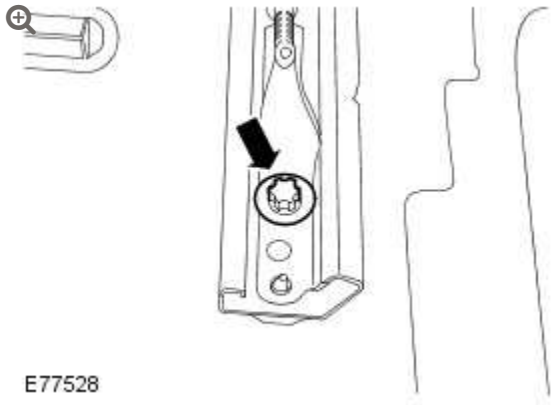

Remove the 2 rear bolts from the RH front seat.

11.

NOTE:

Right-hand shown, left-hand similar.

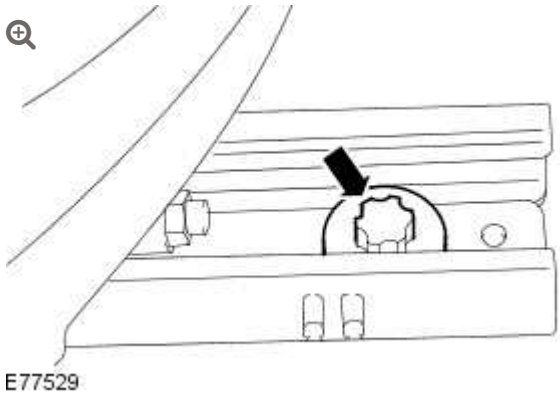

Remove the 2 front bolts from the RH front seat.

- Position the RH front seat fully rearwards.

12. Reposition the RH front seat to the central position.

-

Reposition the RH front seat backrest to the fully upright position.

- Lower the RH front seat head restraint to the fully lowered position.

	All vehicles

13. Make the air bag supplemental restraint system (SRS) safe.
For additional information, refer to: Standard Workshop Practices (100-00, Description and Operation).

14. Disconnect the battery ground cable.
For additional information, refer to: Specifications (414-00, Specifications).

15.

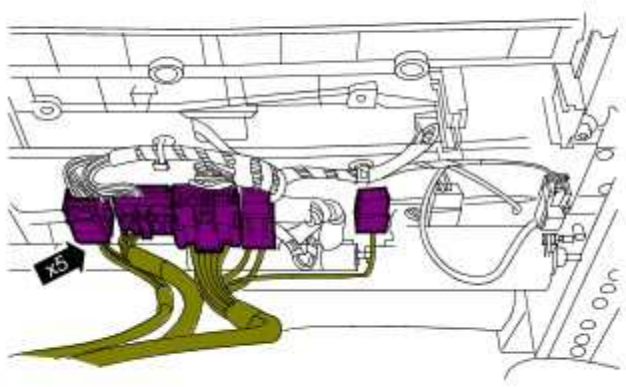

E137121

Reposition the RH front seat for access.

- Disconnect the 5 electrical connectors.

16.

NOTE:

Make sure no damage is caused to the vehicle trim when removing the front seat.

With assistance carefully remove the RH front seat.

- Fit protection around the door aperture to protect the interior.

17.

NOTE:

Right-hand shown, left-hand similar.

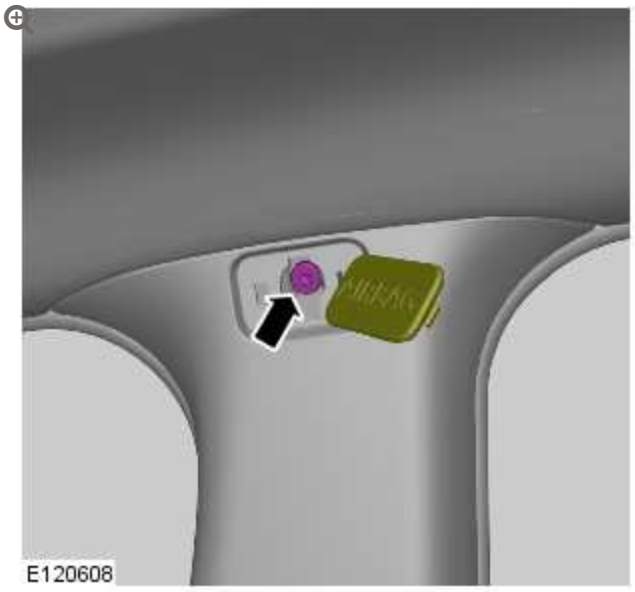

Remove the 2 bolts.

18.

NOTE:

Right-hand shown, left-hand similar.

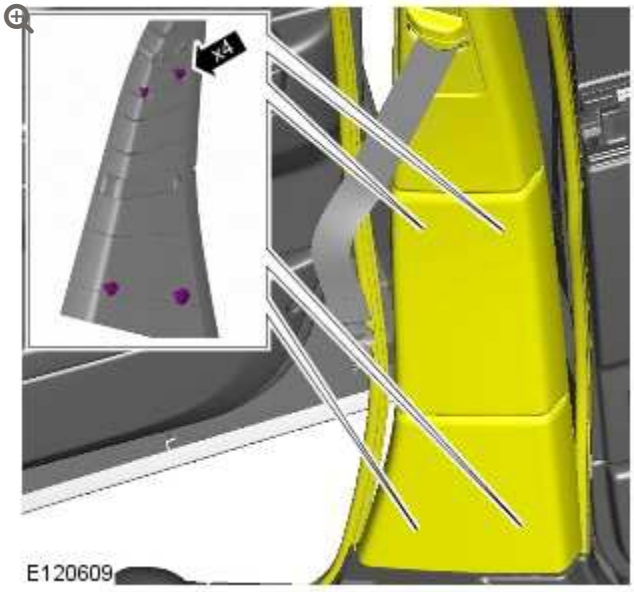

Release the 4 clips from the RH B-pillar lower trim panel.

19. Remove the RH B-pillar upper trim panel.
    - Release the 4 clips from the RH B-pillar upper trim panel.

20. Remove the LH C-pillar upper trim panel.
    For additional information, refer to: C-Pillar Upper Trim Panel - Vehicles With: Rear Business Seats (501-05, Removal and Installation).

21. **NOTE:**

    Right-hand shown, left-hand similar.

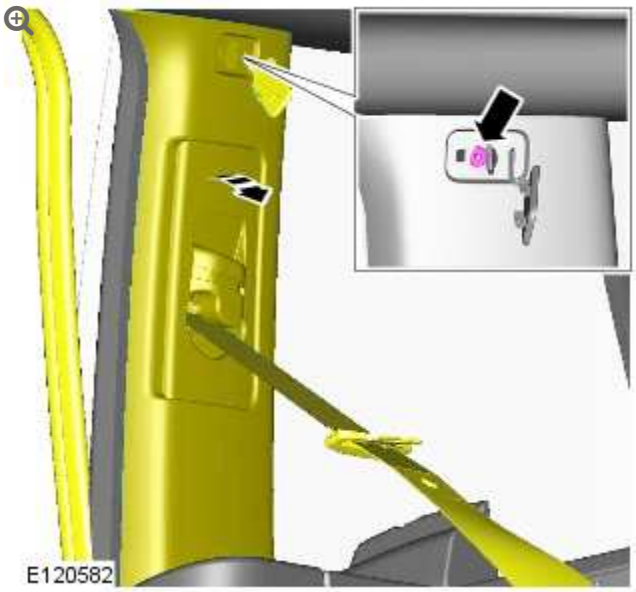

Release the RH C-pillar upper trim panel.

22.

NOTE:

Right-hand shown, left-hand similar.

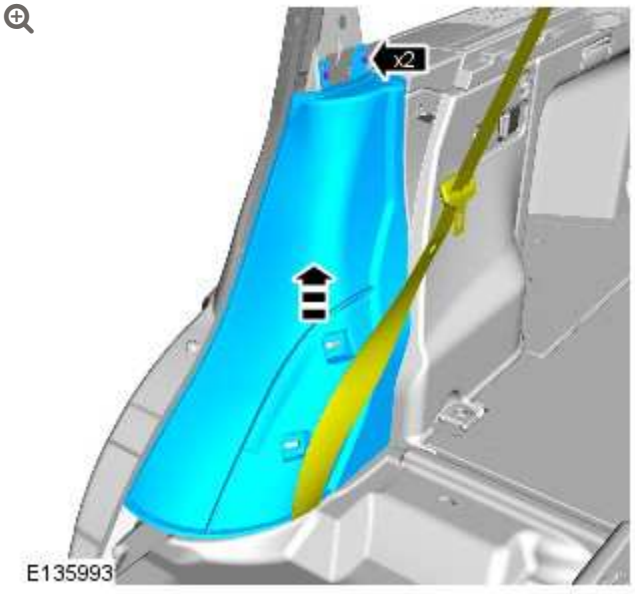

Remove the RH C-pillar lower trim panel.

- Remove the 2 screws.

- Release from the clips.

23. **NOTE:**

Right-hand shown, left-hand similar.

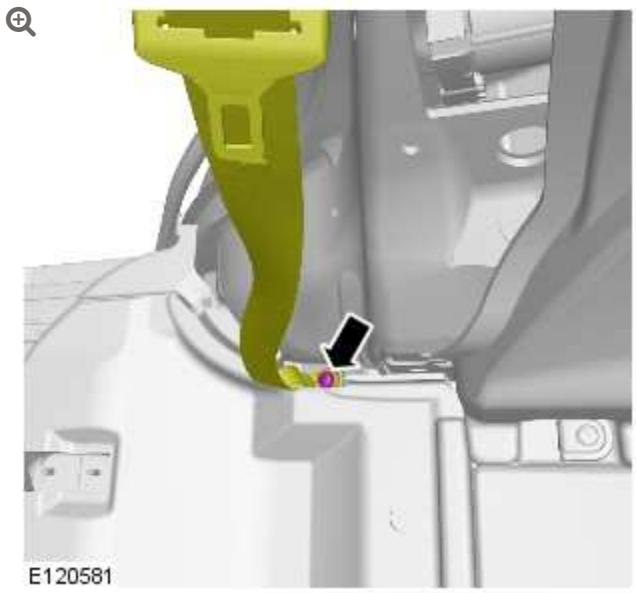

Release the RH rear safety belt lower anchor.

- Remove and discard the bolt.

24. Remove the LH rear quarter trim panel.
For additional information, refer to: Rear Quarter Trim Panel (501-05, Removal and Installation).

25. **NOTE:**

Left-hand shown, right-hand similar.

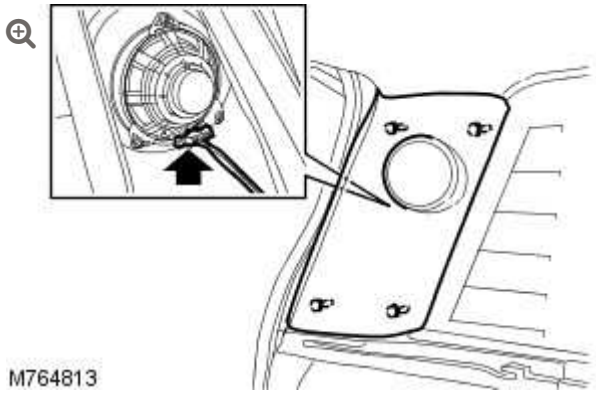

Remove the RH rear quarter trim panel.

- Disconnect the electrical connector.

26. Remove the LH sun visor.
For additional information, refer to: Sun Visor (501-05, Removal and Installation).

27. 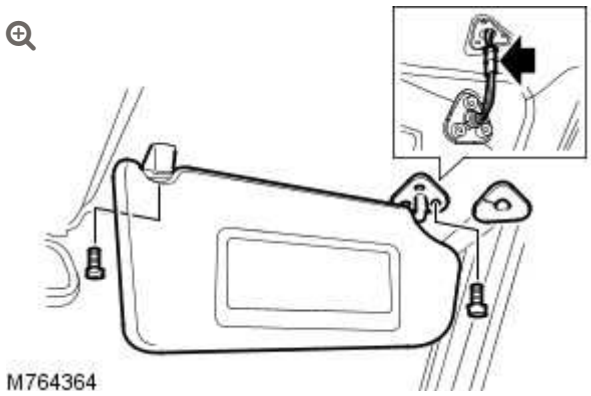

Remove the RH sun visor.

- Carefully release the RH sun visor mounting trim panel.
- Remove the 4 screws.
- Disconnect the electrical connector.
- Remove the RH sun visor.

28.

Remove the overhead console.

For additional information, refer to: Overhead Console (501-12, Removal and Installation).

29. Remove the center interior lamp.

For additional information, refer to: Center Interior Lamp (417-02, Removal and Installation).

30.

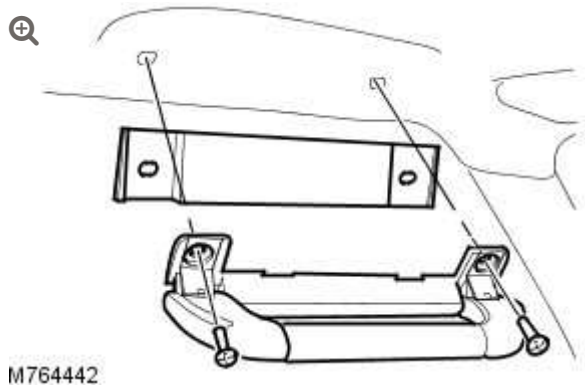

Remove the 4 grab handles.

- Release the grab handle screw covers.
- Remove the screws.
- Remove the grab handle mounting plates.

31.

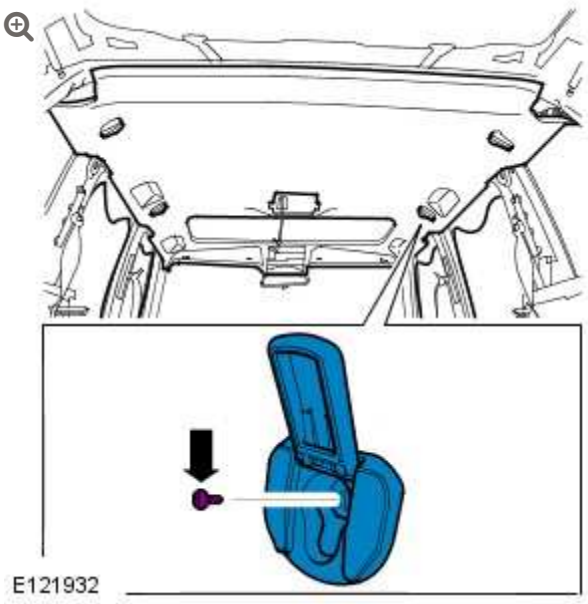

Remove the 2 cargo net hangers.

- Reposition the cargo net hanger covers.
- Remove the screws.

32.

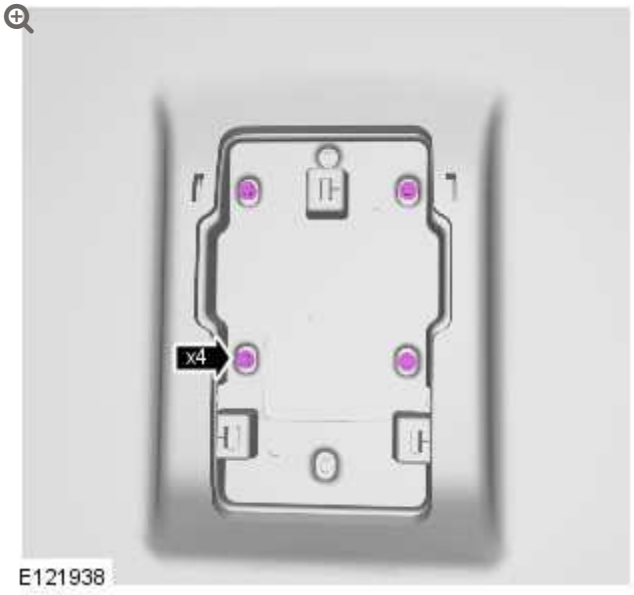

Remove the 4 screws from the headliner.

33.

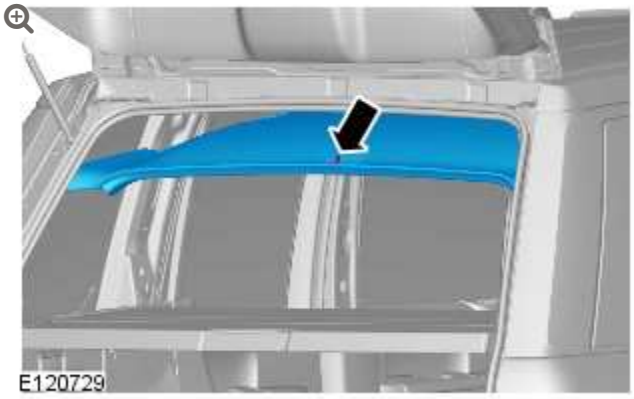

Carefully release the clip from the rear of the headliner.

34. **NOTE:**

Remove the headlining from the rear of the vehicle.

With assistance, carefully remove the headliner.

INSTALLATION

All vehicles

1. With assistance, install the headliner.

2. Secure the clip to the rear of the headliner

3. **NOTE:**

The 4 screws are located behind the center overhead console.

Install the 4 screws to the headliner.

4. Install the 4 door aperture weatherstrips to the headliner.

5. Install the 2 cargo net hangers.
   - Install the screws.
   - Reposition the cargo net hanger covers.

6. Install the 4 grab handles.
   - Install the grab handle mounting plates.
   - Install the screws.
   - Secure the grab handle screw covers.
   - Tighten the screw to 7 Nm. (5 lb.ft).

7. Install the center interior lamp.
   For additional information, refer to: Center Interior Lamp (417-02, Removal and Installation).

8. Install the overhead console.
   For additional information, refer to: Overhead Console (501-12, Removal and Installation).

9. Install the RH sun visor clip to the headliner.
   - Install the screw.

10. Install the RH sun visor.
    - Connect the electrical connector.
    - Install the 3 screws.

11. Install the RH sun visor mounting trim panel.
    - Secure the RH sun visor mounting trim panel.

12. Secure the RH sun visor to the RH sun visor clip.

13. Install the LH sun visor.
    For additional information, refer to: Sun Visor (501-05, Removal and Installation).

14. Install the RH rear quarter trim panel.
    - Connect the electrical connector.

15. Secure the RH rear quarter trim panel.
    - Secure the 4 clips.

16. Install the LH rear quarter trim panel.
    For additional information, refer to: Rear Quarter Trim Panel (501-05, Removal and Installation).

17. Install the RH C-pillar upper trim panel.
    - Reposition the RH rear safety belt through the RH C-pillar upper trim panel.

18. Secure the RH rear safety belt lower anchor.
    - Tighten the new bolts to 45 Nm (33 lb.ft).

19. Install the RH C-pillar lower trim panel.
    - Install the 2 screws.
    - Secure the clips.

20. Secure the RH C-pillar upper trim panel.
    - Tighten the bolt to 6 Nm (4 lb.ft).

21. Secure the RH rear door aperture weatherstrip.

22. Install the LH C-pillar upper trim panel.
    For additional information, refer to: C-Pillar Upper Trim

Panel - Vehicles With: Rear Business Seats (501-05, Removal and Installation).

23. Install the RH B-pillar upper trim panel.
    - Secure the 4 clips to the RH B-pillar upper trim panel.
    - Install the Torx bolt and tighten to 6 Nm (4 lb.ft).

24. Secure the 4 clips to the RH B-pillar lower trim panel.
    - Install the Torx bolt and tighten to 6 Nm (4 lb.ft).

25. Secure the RH front and rear door aperture weatherstrips.

26. **NOTE:**

    Make sure no damage is caused to the vehicle trim when installing the front seat.

    With assistance carefully install the RH front seat.
    - Remove the protection from around the door aperture.

27. **CAUTION:**

    Make sure the wiring harness is installed to its original position.

    Reposition the RH front seat for access.
    - Connect the 5 electrical connectors.

28.

Connect the battery ground cable.
For additional information, refer to: Specifications (414-00, Specifications).

29. **NOTE:**

> Make sure the 3 seat rail covers are fitted to their original positions. Note: The inner front seat rail does not have a seat rail cover.

Install the 2 front bolts to the RH front seat.

- Align the RH front seat locating pegs.
- Position the RH front seat fully rearwards.
- Tighten the RH front seat front bolts to 45 Nm (33 lb.ft).

30. **NOTE:**

> Make sure the 3 seat rail covers are fitted to their original positions. Note: The inner front seat rail does not have a seat rail cover.

Install the 2 rear bolts to the RH front seat.

- Position the RH front seat fully forwards.
- Tighten the RH front seat rear bolts to 45 Nm (33 lb.ft).

31. Attach the safety belt lower anchor to the RH front seat.
    - Install a new bolt and tighten to 45 Nm (33 lb.ft).

32. Install the safety belt lower anchor bolt cover.

33. Reposition the RH front seat to the original position.

34. Install the LH B-pillar upper trim panel.
    For additional information, refer to: B-Pillar Trim Panel (501-05, Removal and Installation).

35. Install the A-pillar trim panels.
    - Secure the 2 clips.
    - Install the Torx bolts and tighten to 6 Nm (4 lb.ft).

36. Secure the RH door aperture weatherstrip.

37. Install the RH rear seat.
    For additional information, refer to: Rear Seat - Vehicles With: Rear Business Seats (501-10, Removal and Installation).

i	Vehicles with roof opening panel

38. Install the roof opening panel securing plate.
    - Install the 15 screws.

39. Install the roof opening panel shield.
    For additional information, refer to: Roof Opening Panel Shield (501-17, Removal and Installation).

INTERIOR TRIM AND ORNAMENTATION

HEADLINER (G1239868)

REMOVAL AND INSTALLATION

76.64.15	HEADLINER - SUNSHINE/SLIDING ROOF CONDITION - RENEW	ALL DERIVATIVES	3.1	USED WITHINS	+

REMOVAL

	All vehicles

1. Remove the roof opening panel shield.
   For additional information, refer to: Roof Opening Panel Shield (501-17, Removal and Installation).

2. 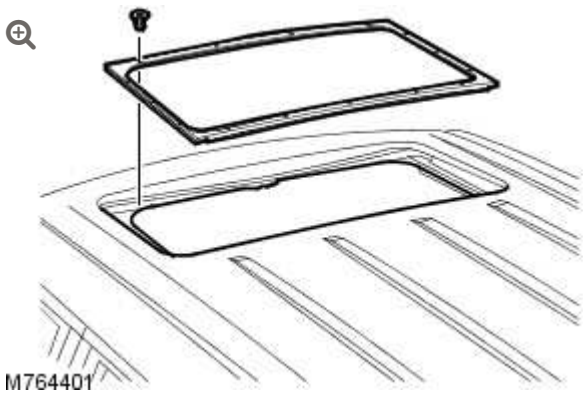

   Remove the roof opening panel securing plate.

- Remove the 15 screws.

	All vehicles

3. Make the air bag supplemental restraint system (SRS) safe.
   For additional information, refer to: Standard Workshop Practices (100-00, Description and Operation).

4. Disconnect the battery ground cable.
   For additional information, refer to: Specifications (414-00, Specifications).

5. Remove the RH rear seat.
   For additional information, refer to: Rear Seat (501-10, Removal and Installation).

6. Remove the 4 door aperture weatherstrips.

7. 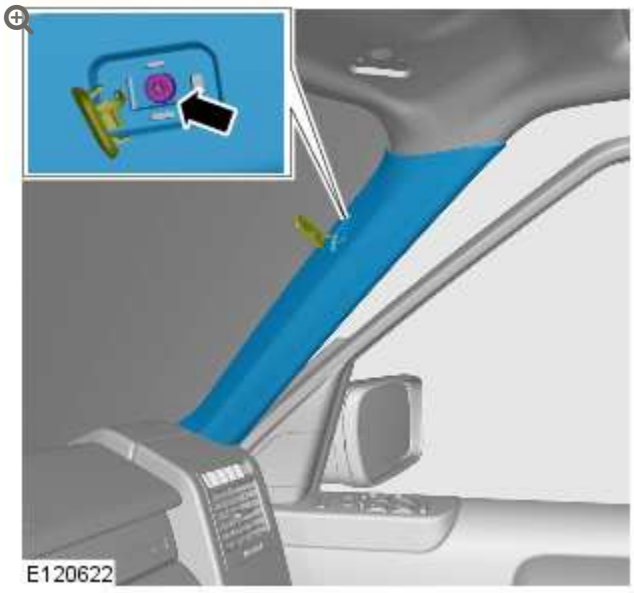

   Remove the A-pillar trim panels.

   - Right-hand side shown, left-hand side similar.
   - Remove the 2 Torx screws.

8. Remove the LH B-pillar trim panel.
   For additional information, refer to: B-Pillar Trim Panel (501-05, Removal and Installation).

9. Position the RH front seat fully forwards.

10. **NOTES:**

    - Release the front safety belt lower anchor bolt cover clip upwards and away from the front seat base side trim panel.
    - Raise the seat base for access.

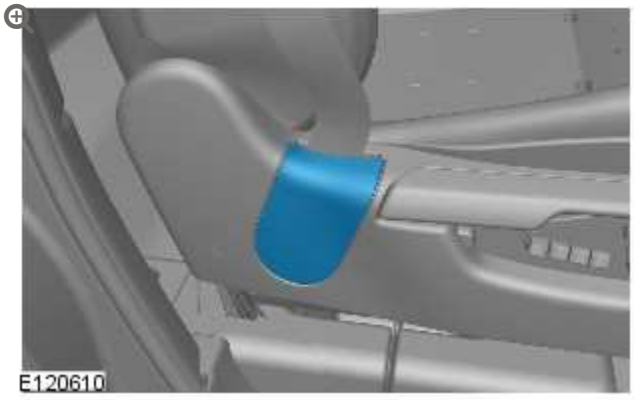

Remove the safety belt lower anchor bolt cover from the RH front seat.

1. Carefully release the clip from behind the RH front seat base side trim panel.
2. Remove the cover.

11. **NOTE:**

    Lower the seat base for access.

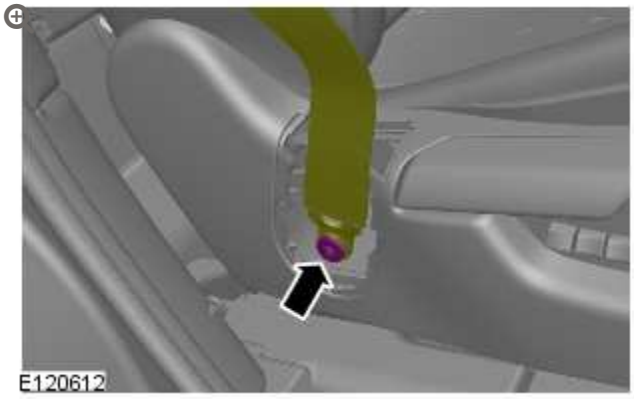

Release the safety belt lower anchor from the RH front seat.

- Remove and discard the bolt.

12.

NOTE:

Right-hand shown, left-hand similar.

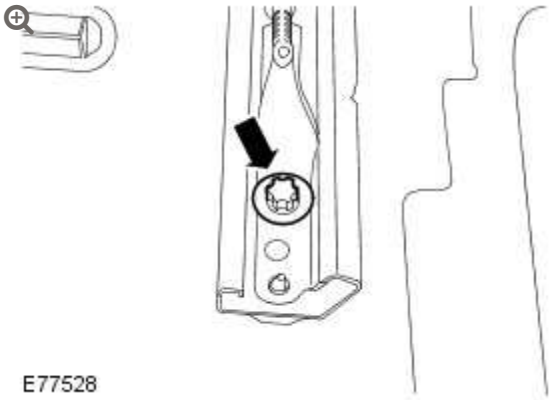

Remove the 2 rear bolts from the RH front seat.

13.

NOTE:

Right-hand shown, left-hand similar.

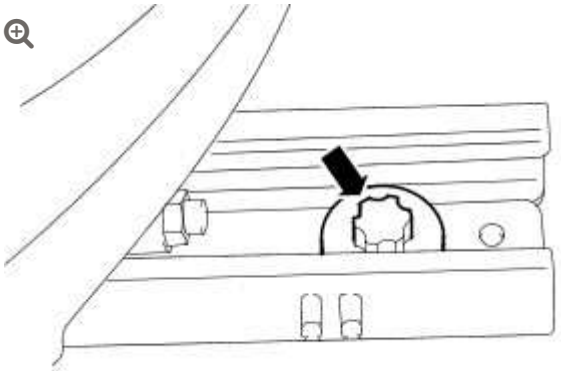

Remove the 2 front bolts from the RH front seat.

- Position the RH front seat fully rearwards.

14. Reposition the RH front seat to the central position.
    - Reposition the RH front seat backrest to the fully upright position.
    - Lower the RH front seat head restraint to the fully lowered position.

15. 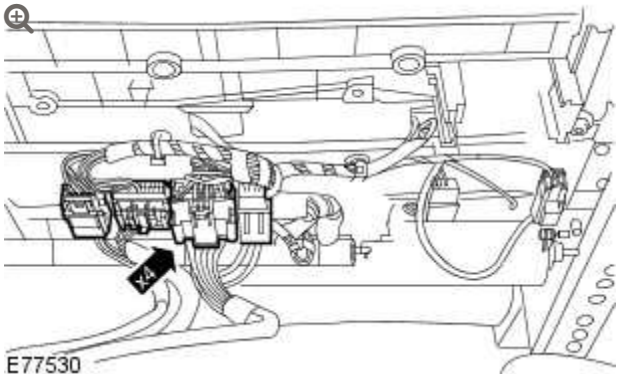

Reposition the RH front seat for access.

- Disconnect the 4 electrical connectors.

16.

NOTE:

> Make sure no damage is caused to the vehicle trim when removing the front seat.

With assistance carefully remove the RH front seat.

- Fit protection around the door aperture to protect the interior.

17.

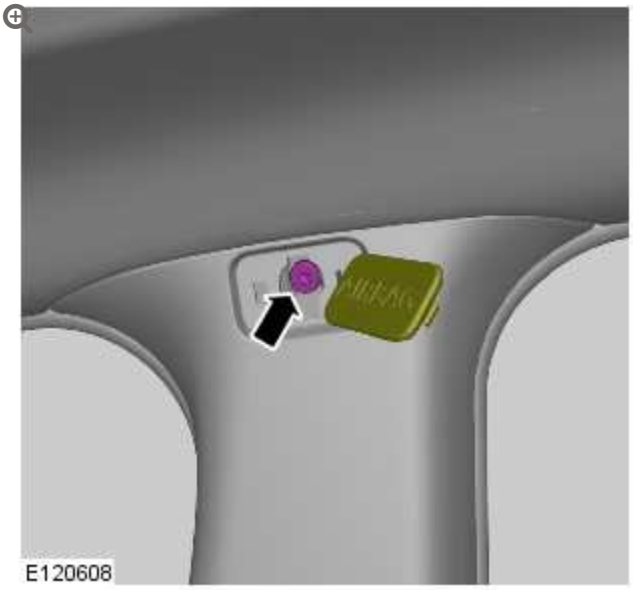

18.

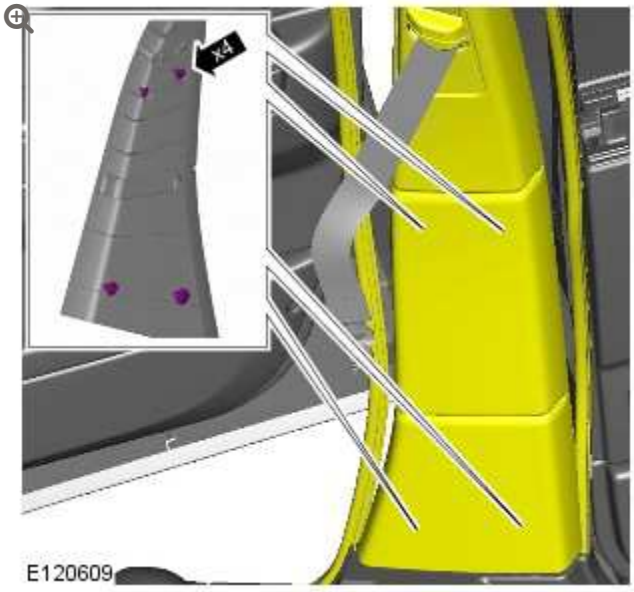

Release the 4 clips from the RH B-pillar trim panel.

19. Remove the LH C-pillar upper trim panel.
For additional information, refer to: C-Pillar Upper Trim Panel (501-05, Removal and Installation).

20.

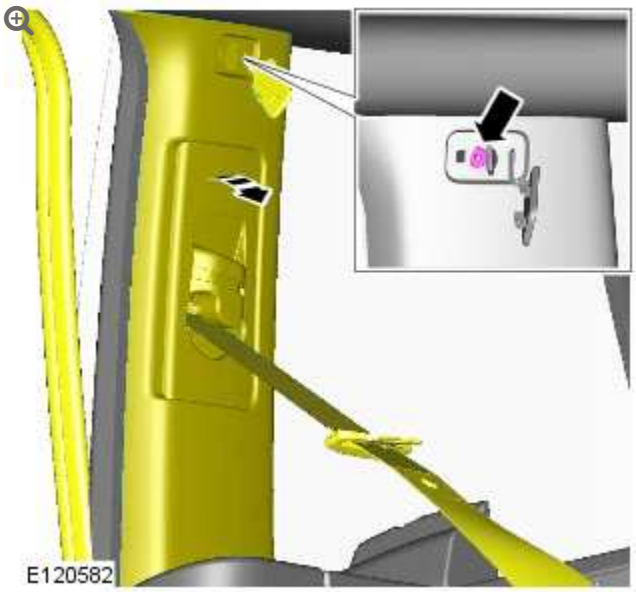

Release the RH C-pillar upper trim panel.

21.

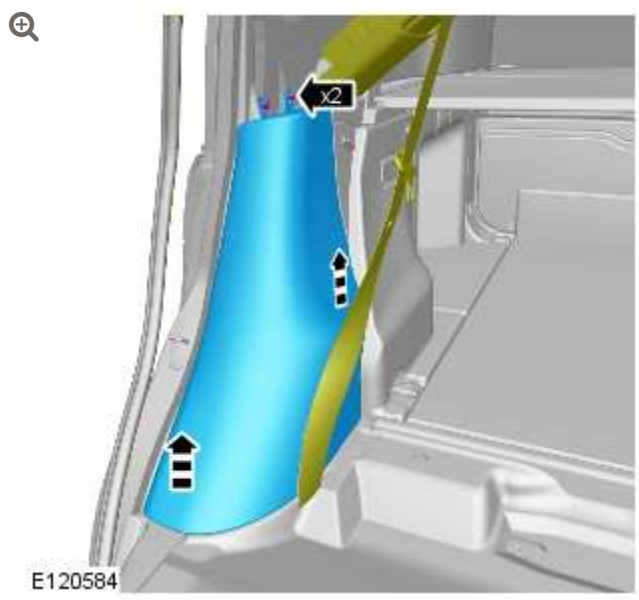

Remove the RH C-pillar lower trim panel.

- Remove the 2 screws.
- Release from the clips.

22.

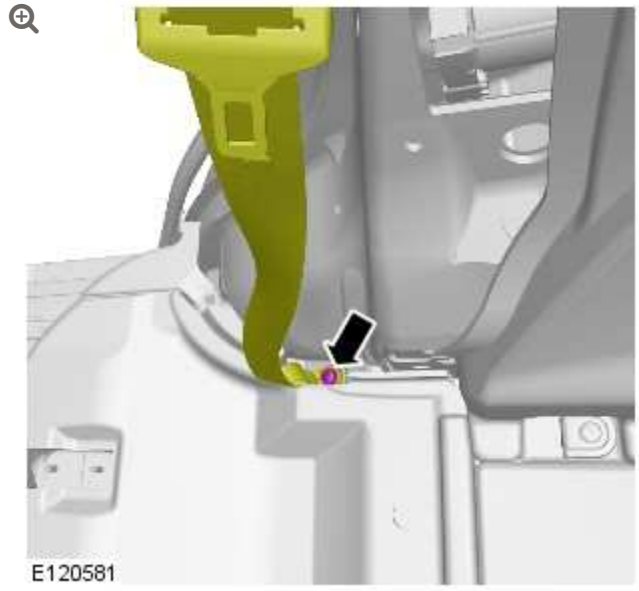

Release the RH rear safety belt lower anchor.

- Remove and discard the bolt.

23. Remove the RH C-pillar upper trim panel.

-

Reposition the RH rear safety belt through the RH C-pillar upper trim panel.

24. Remove the LH rear quarter trim panel.
For additional information, refer to: Rear Quarter Trim Panel (501-05, Removal and Installation).

25.

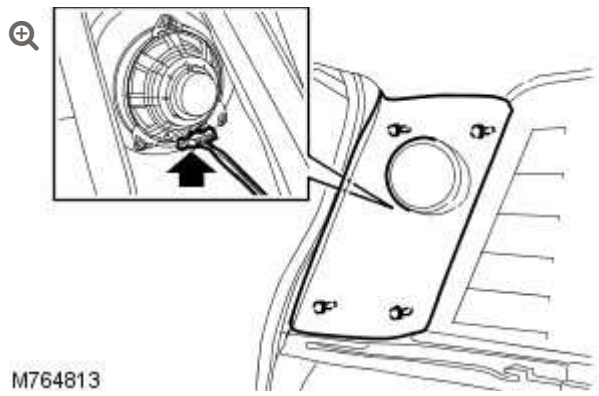

Remove the RH rear quarter trim panel.

- Disconnect the electrical connector.

26. Remove the LH sun visor.
For additional information, refer to: Sun Visor (501-05, Removal and Installation).

27. Release the RH sun visor from the sun visor clip.

28.

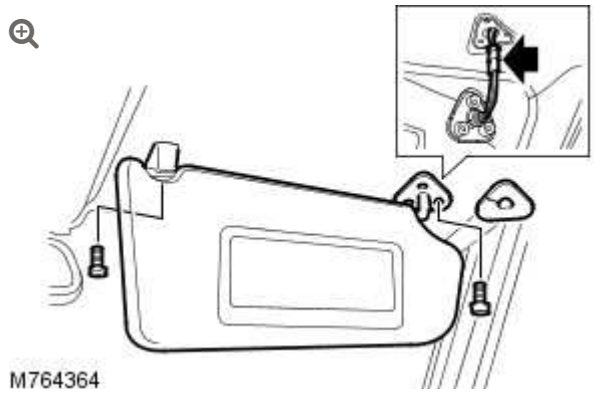

Remove the RH sun visor mounting trim panel.

- Carefully release the RH sun visor mounting trim panel.

29. Remove the RH sun visor.
    - Remove the 3 screws.
    - Disconnect the electrical connector.

30. Remove the RH sun visor clip from the headliner.
    - Remove the screw.

31. Remove the overhead console.
    For additional information, refer to: Overhead Console (501-12, Removal and Installation).

32. Remove the center interior lamp.
    For additional information, refer to: Center Interior Lamp (417-02, Removal and Installation).

33. 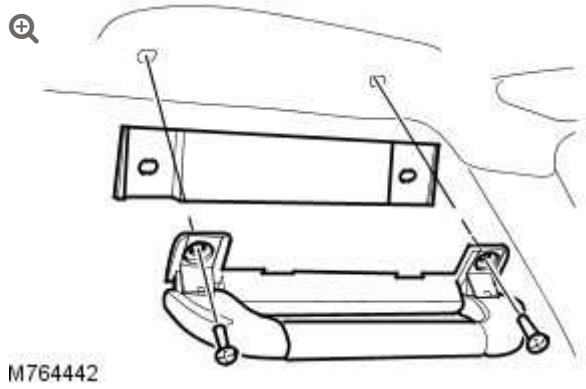

    Remove the 4 grab handles.
    - Release the grab handle screw covers.
    - Remove the screws.
    - Remove the grab handle mounting plates.

34.

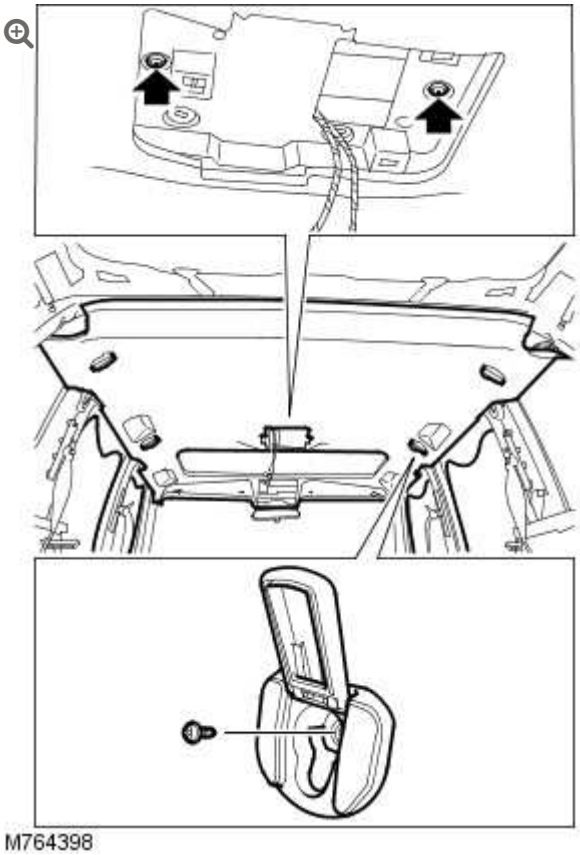

Remove the 2 cargo net hangers.

- Reposition the cargo net hanger covers.
- Remove the screws.

ℹ	Vehicles with roof opening panel

35. Remove the 2 screws from the headliner.

ℹ	All vehicles

36. **NOTE:**

The 4 screws are located behind the center overhead console.

Remove the 4 screws from the headliner.

37.

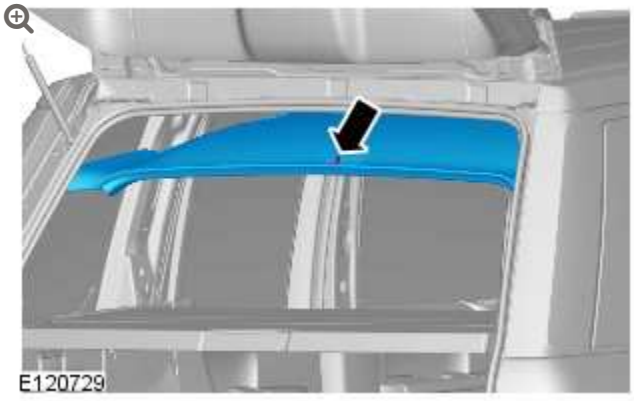

Carefully release the 1 clip from the rear of the headliner.

38.

NOTE:

Remove the headlining from the rear of the vehicle.

With assistance, carefully remove the headliner.

INSTALLATION

All vehicles

1. With assistance, install the headliner.

2. Secure the 1 clip to the rear of the headliner.

3.

NOTE:

The 4 screws are located behind the center overhead console.

Install the 4 screws to the headliner.

ℹ	Vehicles with roof opening panel

4. **NOTE:**

   The 2 screws are located behind the front console access through sunglasses bin.

   Install the 2 screws to the headliner.

ℹ	All vehicles

5. Install the 4 door aperture weatherstrips to the headliner.

6. Install the 2 cargo net hangers.
   - Install the screws.
   - Reposition the cargo net hanger covers.

7. Install the 4 grab handles.
   - Install the grab handle mounting plates.
   - Install the screws.
   - Tighten the screw to 7 Nm. (5 lb.ft).
   - Secure the grab handle screw covers.

8. Install the center interior lamp.
   For additional information, refer to: Center Interior Lamp (417-02, Removal and Installation).

9.

Install the overhead console.
For additional information, refer to: Overhead Console (501-12, Removal and Installation).

10. Install the RH sun visor clip to the headliner.
    - Install the screw.

11. Install the RH sun visor.
    - Connect the electrical connector.
    - Install the 3 screws.

12. Install the RH sun visor mounting trim panel.
    - Secure the RH sun visor mounting trim panel.

13. Secure the RH sun visor to the RH sun visor clip.

14. Install the LH sun visor.
    For additional information, refer to: Sun Visor (501-05, Removal and Installation).

15. Install the RH rear quarter trim panel.
    - Connect the electrical connector.

16. Secure the RH rear quarter trim panel.
    - Secure the 4 clips.

17. Install the LH rear quarter trim panel.
    For additional information, refer to: Rear Quarter Trim Panel (501-05, Removal and Installation).

18. Install the RH C-pillar upper trim panel.
    - Reposition the RH rear safety belt through the RH C-pillar upper trim panel.

19. Secure the RH rear safety belt lower anchor.
    - Tighten the new bolts to 45 Nm (33 lb.ft).

20. Install the RH C-pillar lower trim panel.
    - Install the 2 screws.
    - Secure the clips.

21. Secure the RH C-pillar upper trim panel.
    - Tighten the bolt to 6 Nm (4 lb.ft).

22. Secure the RH rear door aperture weatherstrip.

23. Install the LH C-pillar upper trim panel.
    For additional information, refer to: C-Pillar Upper Trim Panel (501-05, Removal and Installation).

24. Install the RH B-pillar trim panel.
    - Secure the 4 clips to the RH B-pillar trim panel.
    - Install the Torx bolt and tighten to 6 Nm (4 lb.ft).

25. Secure the RH front and rear door aperture weatherstrips.

26. **NOTE:**

    Make sure no damage is caused to the vehicle trim when installing the front seat.

    With assistance carefully install the RH front seat.
    - Remove the protection from around the door aperture.

27. **CAUTION:**

Make sure the wiring harness is installed to its original position.

Reposition the RH front seat for access.

- Connect the 4 electrical connectors.

28. **NOTE:**

Make sure the 3 seat rail covers are fitted to their original positions. Note: The inner front seat rail does not have a seat rail cover.

Install the 2 front bolts to the RH front seat.

- Align the RH front seat locating pegs.
- Position the RH front seat fully rearwards.
- Tighten the RH front seat front bolts to 45 Nm (33 lb.ft).

29. **NOTE:**

Make sure the 3 seat rail covers are fitted to their original positions. Note: The inner front seat rail does not have a seat rail cover.

Install the 2 rear bolts to the RH front seat.

- Position the RH front seat fully forwards.
- Tighten the RH front seat rear bolts to 45 Nm (33 lb.ft).

30. Attach the safety belt lower anchor to the RH front seat.
    - Install a new bolt and tighten to 45 Nm (33 lb.ft).

31. Install the safety belt lower anchor bolt cover.

32. Reposition the RH front seat to the original position.

33. Install the LH B-pillar trim panel.
    For additional information, refer to: B-Pillar Trim Panel (501-05, Removal and Installation).

34. Install the A-pillar trim panels.
    - Secure the 2 clips.
    - Install the Torx bolts and tighten to 6 Nm (4 lb.ft).

35. Secure the RH door aperture weatherstrip.

36. Install the RH rear seat.
    For additional information, refer to: Rear Seat (501-10, Removal and Installation).

37. Connect the battery ground cable.
    For additional information, refer to: Specifications (414-00, Specifications).

ℹ	Vehicles with roof opening panel

38. Install the roof opening panel securing plate.
    - Install the 15 screws.

39.

Install the roof opening panel shield.

For additional information, refer to: Roof Opening Panel Shield (501-17, Removal and Installation).

LIFTGATE LOWER TRIM PANEL (G913563)

REMOVAL AND INSTALLATION

REMOVAL

1.

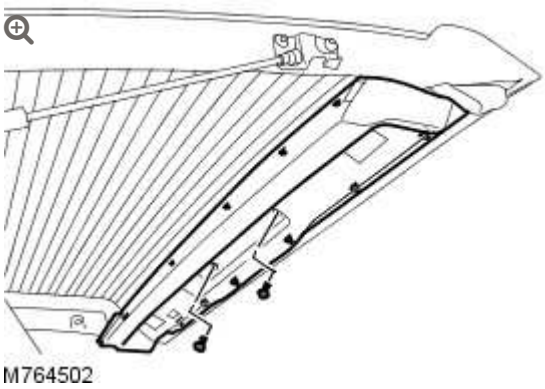

Release the liftgate lower trim panel.

- Remove the 2 screws.
- Release the 11 clips.

2.

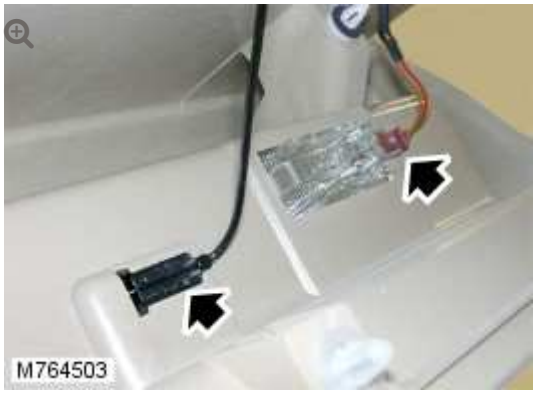

Remove the liftgate lower trim panel.

- Disconnect the 2 electrical connectors.
- Disconnect the liftgate release handle cable from the liftgate lower trim panel.

3. **NOTE:**

> Do not disassemble further if the component is removed for access only.

Remove the 2 lamps from the liftgate lower trim panel.

- Remove the 11 clips.

INSTALLATION

1. Install the lamps to the liftgate lower trim panel.
   - Install the 11 clips.
2. Install the liftgate lower trim panel.
   - Connect the liftgate release handle cable to the liftgate lower trim panel.
   - Secure the liftgate lower trim panel.

- Install the screws.
- Connect the electrical connectors.

LIFTGATE UPPER TRIM PANEL (G906115)

REMOVAL AND INSTALLATION

REMOVAL

1.

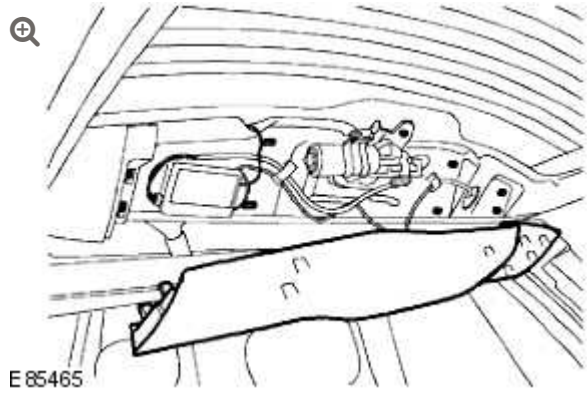

Remove the liftgate upper trim panel.

- Release the 9 clips.

INSTALLATION

1. Install the liftgate upper trim panel.

INTERIOR TRIM AND ORNAMENTATION

LOADSPACE TRIM PANEL – ULTIMATE, VEHICLES WITH: REAR BUSINESS SEATS (G1395449)

REMOVAL AND INSTALLATION

76.13.83	TRIM CASING – LUGGAGE COMPARTMENT – LH – RENEW – WITH REAR BUSINESS SEATS FITTED	ALL DERIVATIVES	1.2	USED WITHINS

REMOVAL

1. **NOTES:**

- All vehicles.
- RH illustration shown, LH is similar.

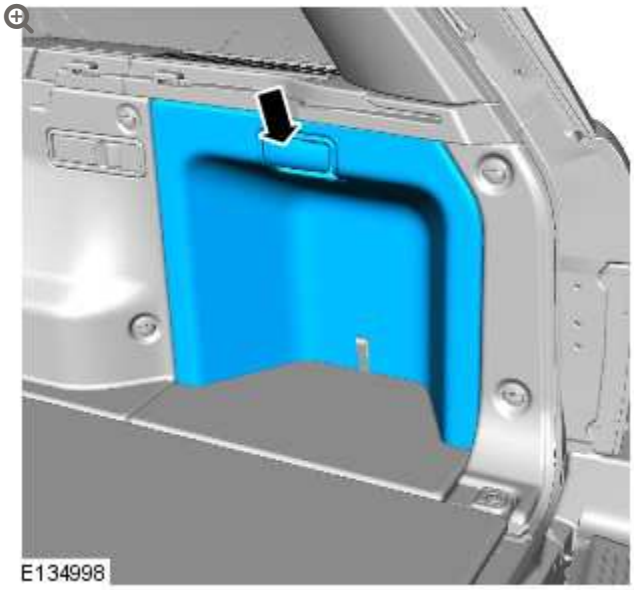

Remove the access panel from the loadspace trim panel.

2.

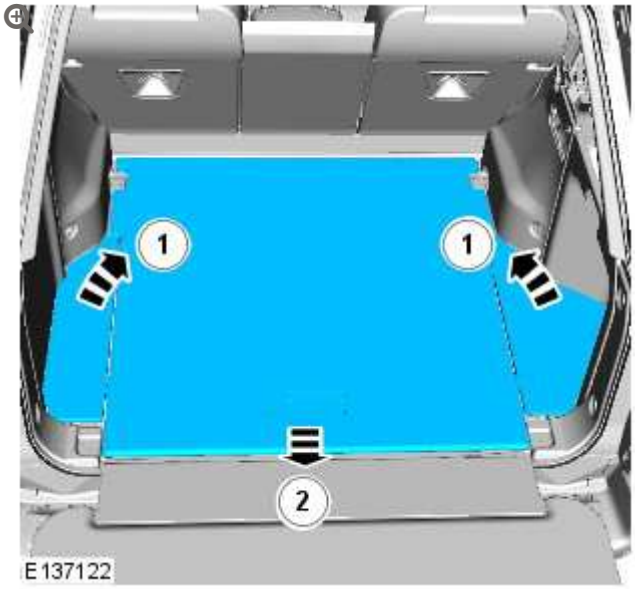

Remove the loadspace floor center panel.

3.

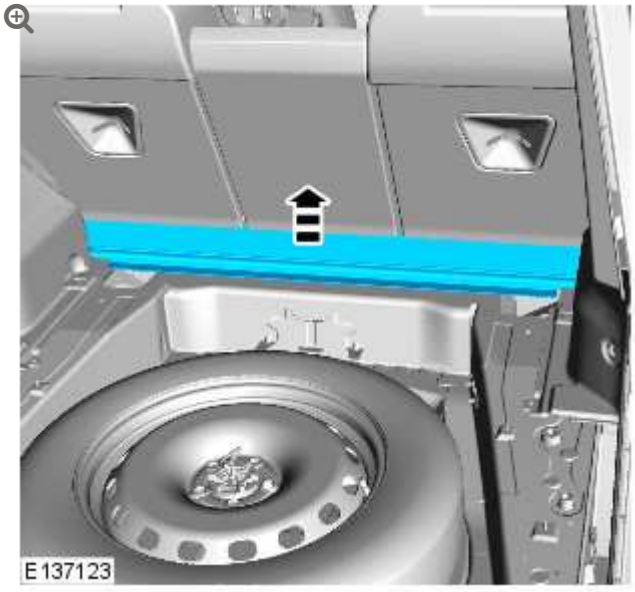

Remove the loadspace floor gap fill panel.

4.

NOTE:

Only carry out the following steps if removing the right hand (RH) loadspace trim panel.

Remove the RH C-pillar upper trim panel.
For additional information, refer to: C-Pillar Upper Trim Panel - Vehicles With: Rear Business Seats (501-05, Removal and Installation).

5.



Raise the armrest.

6.



Raise the centre console table.

7.

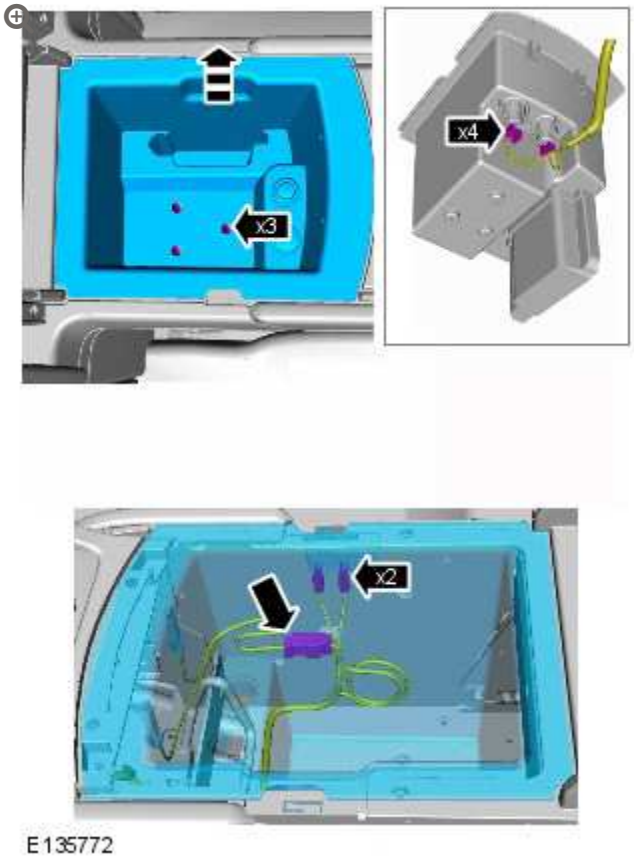

E135772

Remove the stowage compartment.

- Remove the 3 retaining screws.
- Raise the stowage compartment and disconnect the 7 electrical connectors.

8.

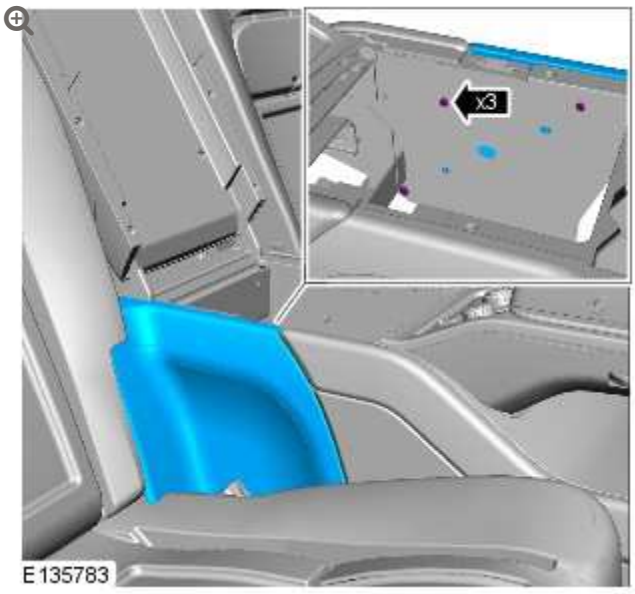

Remove the RH rear trim panel.

- Remove the 3 retaining screws.

9.

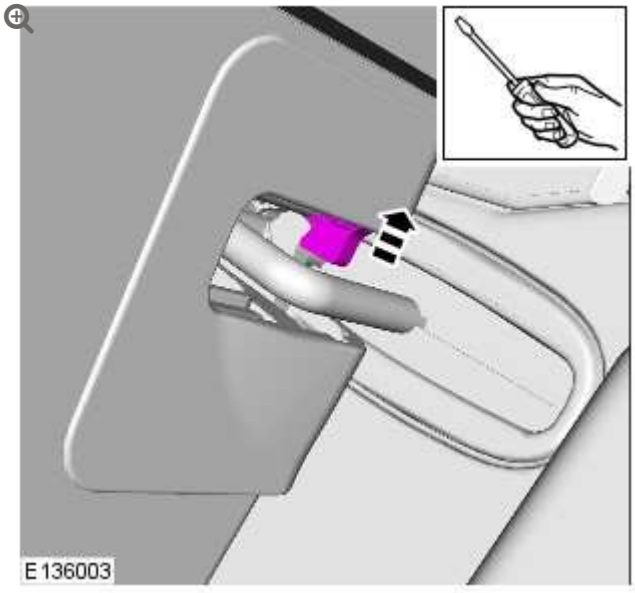

Using a suitable tool, release the RH seat latch.

10.

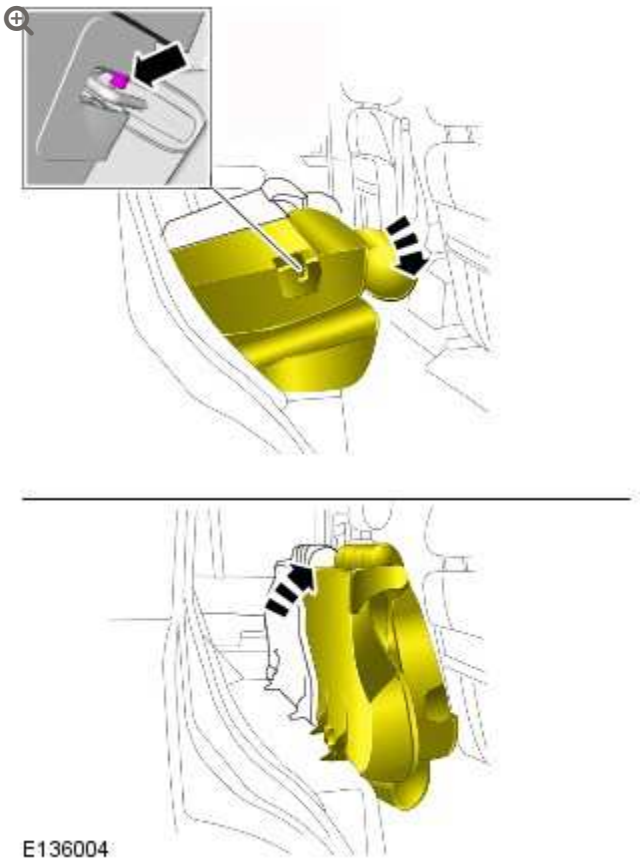

Fold the RH rear seat fully forwards.

11.

NOTE:

Only carry out the following steps if removing the left hand (LH) loadspace trim panel.

Remove the LH C-pillar upper trim panel.
For additional information, refer to: C-Pillar Upper Trim Panel - Vehicles With: Rear Business Seats (501-05, Removal and Installation).

12. Remove the rear seat center console.
For additional information, refer to: Rear Seat Center Console (501-12, Removal and Installation).

13.

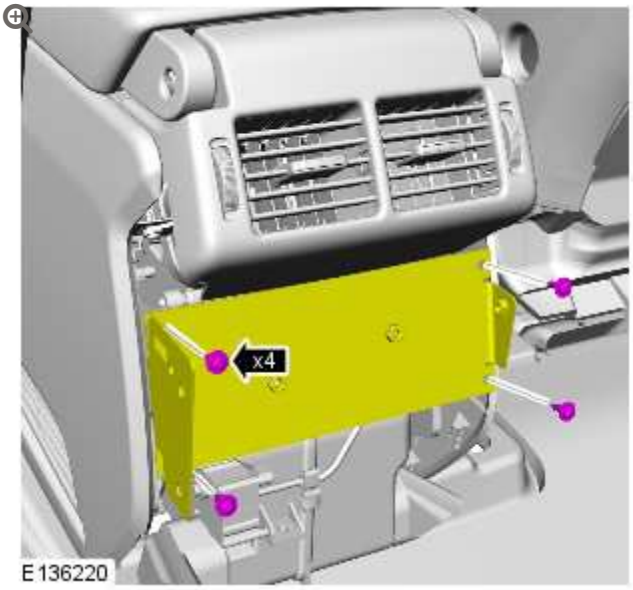

Position the bracket aside.

14.

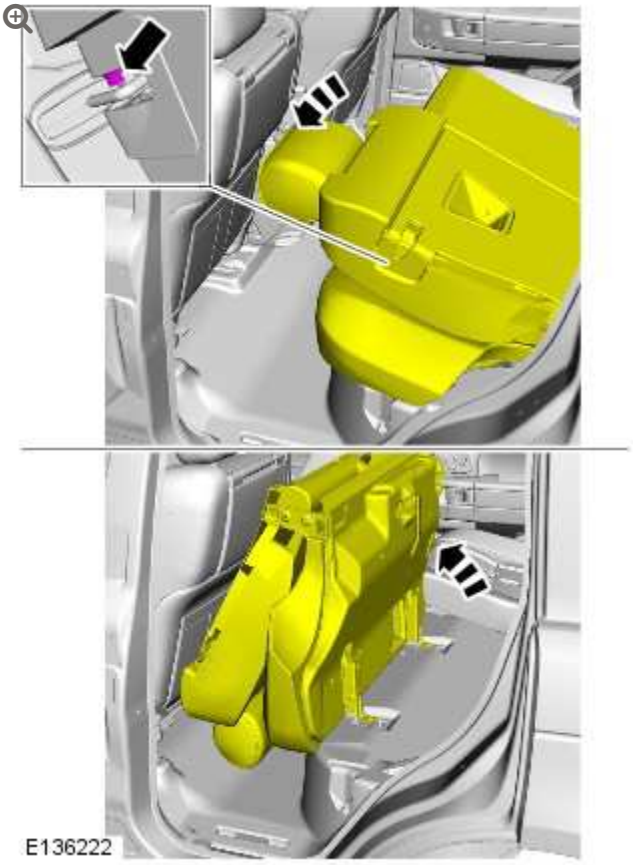

Fold the LH rear seat fully rearwards.

- Carefully feed the center console wiring harness through the grommet.

15. **NOTE:**

All vehicles.

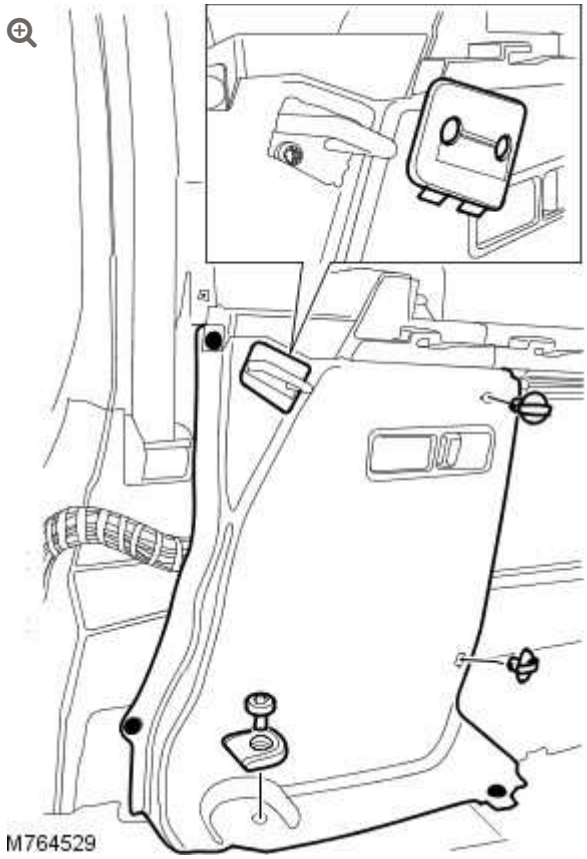

Remove the loadspace securing ring.

- Remove the bolt.

16. Remove the loadspace trim panel.
    - Remove the rear seat backrest catch trim panel.
    - Remove the 5 clips.
    - Disconnect the electrical connector from the interior lamp.
    - Disconnect the electrical connector from the accessory socket.

INSTALLATION

1. **NOTE:**

   All vehicles.

   Install the loadspace trim panel.

   - Connect the electrical connector to the interior lamp.
   - Connect the electrical connector to the accessory socket.
   - Secure the 5 clips.
   - Install the rear seat backrest catch trim panel.

2. Install the loadspace securing ring.

   - Tighten the bolt to 25 Nm (18 lb.ft).

3. **NOTE:**

   This step is only required if previously removed.

   Secure the LH rear seat.

4. **NOTE:**

   This step is only required if previously removed.

   Install the bracket.

   - Tighten the bolts to 9 Nm (7 lb.ft)

5. **NOTE:**

This step is only required if previously removed.

Install the rear seat center console.
For additional information, refer to: Rear Seat Center Console (501-12, Removal and Installation).

6. **NOTE:**

This step is only required if previously removed.

Secure the RH rear seat.

7. **NOTE:**

This step is only required if previously removed.

Install the stowage compartment.

- Connect and secure the electrical connectors.
- Install the 3 retaining screws.
- Tighten to 1.5 Nm.

8. **NOTE:**

This step is only required if previously removed.

Install the RH rear trim panel.

- Install the 3 retaining screws.

9. **NOTE:**

All vehicles.

Install the C-pillar upper trim panel(s).
For additional information, refer to: C-Pillar Upper Trim Panel - Vehicles With: Rear Business Seats (501-05, Removal and Installation).

10. Install the loadspace floor gap fill panel.

11. Install the loadspace floor center panel.

12. Install the access panel to the loadspace trim panel.

INTERIOR TRIM AND ORNAMENTATION

LOADSPACE TRIM PANEL

(G928364)

REMOVAL AND INSTALLATION

76.13.83	TRIM CASING – LUGGAGE COMPARTMENT – LH – RENEW – WITH REAR BUSINESS SEATS FITTED	ALL DERIVATIVES	1.2	USED WITHINS

REMOVAL

1. Remove the C-pillar upper trim panel.
   For additional information, refer to: C-Pillar Upper Trim Panel (501-05, Removal and Installation).

2. Remove the access panel from the loadspace trim panel.

3.

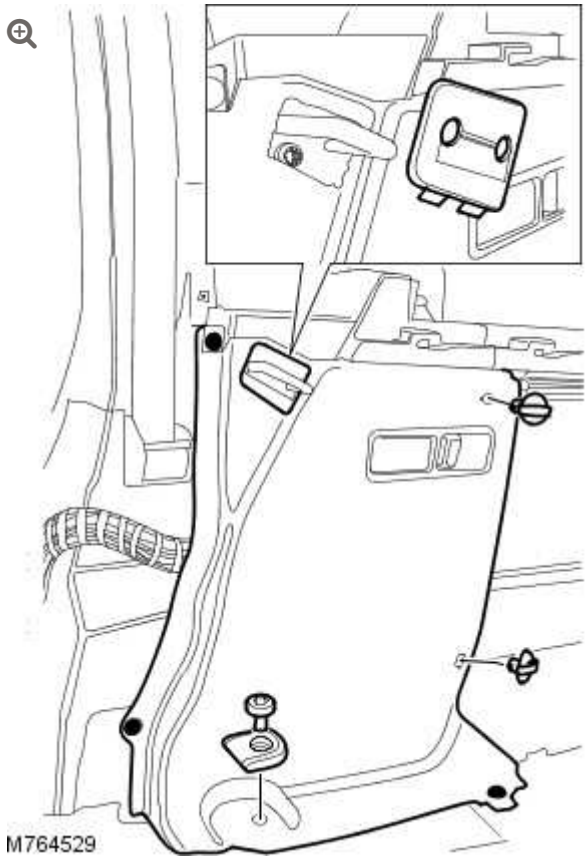

Remove the loadspace securing ring.

- Remove the bolt.

4. Remove the loadspace trim panel.
   - Remove the rear seat backrest catch trim panel.
   - Remove the 5 clips.
   - Disconnect the electrical connector from the interior lamp.
   - Disconnect the electrical connector from the accessory socket.

INSTALLATION

1. Install the loadspace trim panel.
   - Connect the electrical connector to the interior lamp.

- Connect the electrical connector to the accessory socket.
- Secure the 5 clips.
- Install the rear seat backrest catch trim panel.

2. Install the loadspace securing ring.
   - Tighten the bolt to 25 Nm (18 lb.ft).

3. Install the access panel to the loadspace trim panel.

4. Install the C-pillar upper trim panel.
   For additional information, refer to: C-Pillar Upper Trim Panel (501-05, Removal and Installation).

INTERIOR TRIM AND ORNAMENTATION

REAR DOOR TRIM PANEL – ULTIMATE (G1569076)

REMOVAL AND INSTALLATION

76.34.04	TRIM PANEL – REAR DOOR – RENEW	ALL DERIVATIVES	0.4	USED WITHINS	+

REMOVAL

1. Disconnect the battery ground cable.
   For additional information, refer to: Specifications (414-00 Battery and Charging System - General Information, Specifications).

2.

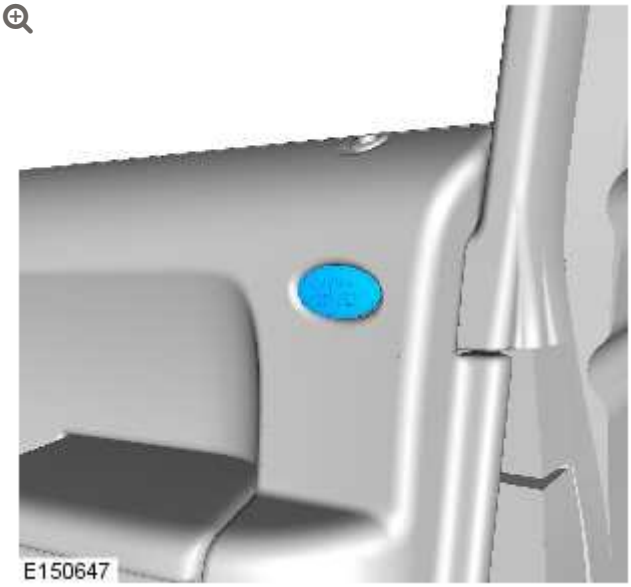

3.

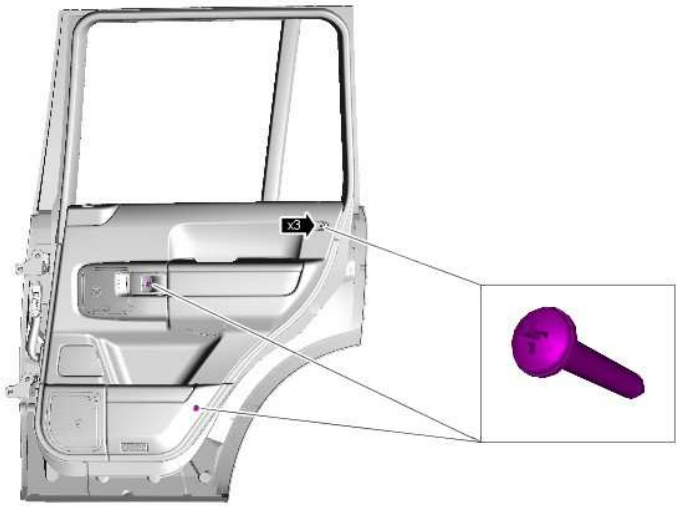

4.

CAUTION:

Carefully release the door trim panel retaining clips.

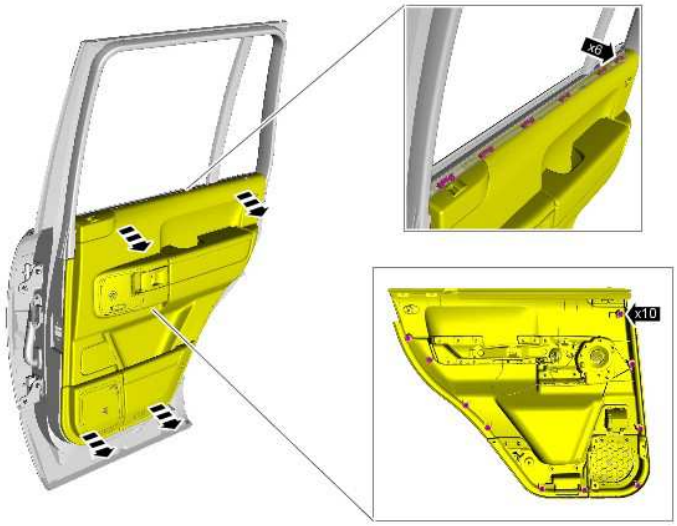

E150785

5.

CAUTION:

Make sure that the top of the door trim panel is clear of the weather strip.

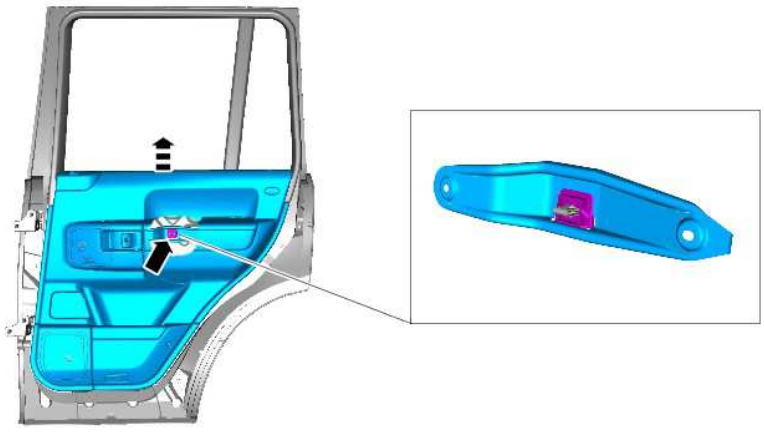

E150786

6.

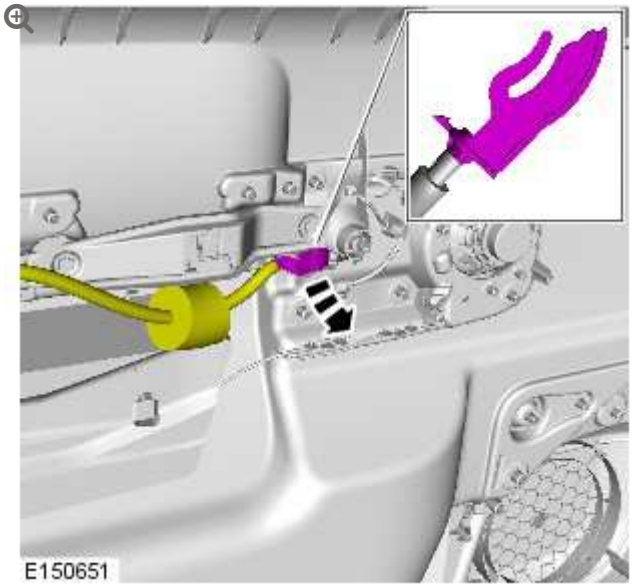

7.

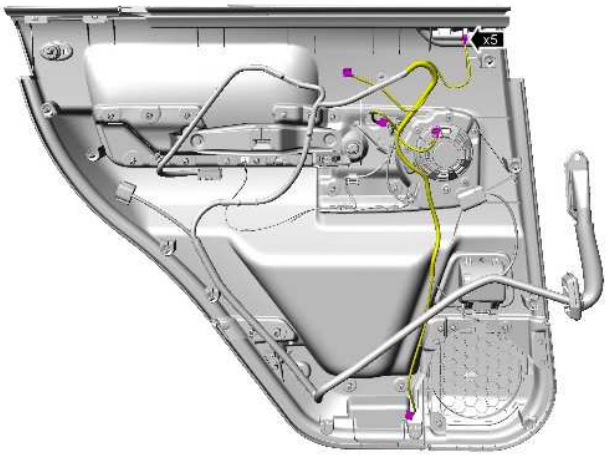

E150791

8.

NOTE:

Do not disassemble further if component is removed for access only.

9.

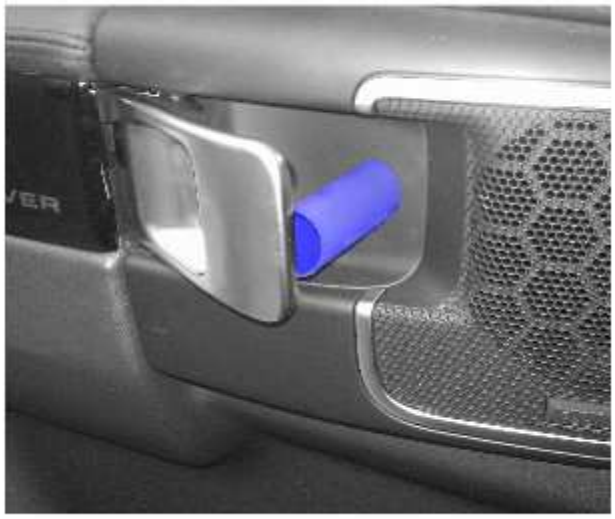

E150794

10.

NOTE:

Using two suitable pieces of laminated plastic, slide under the veneer at the areas illustrated, to aid removal of the component



E150795

11.

CAUTIONS:

- Do not use tools during this operation, removal of the component must be carried out by hand.
- Do not use excessive force to release the component.



12.

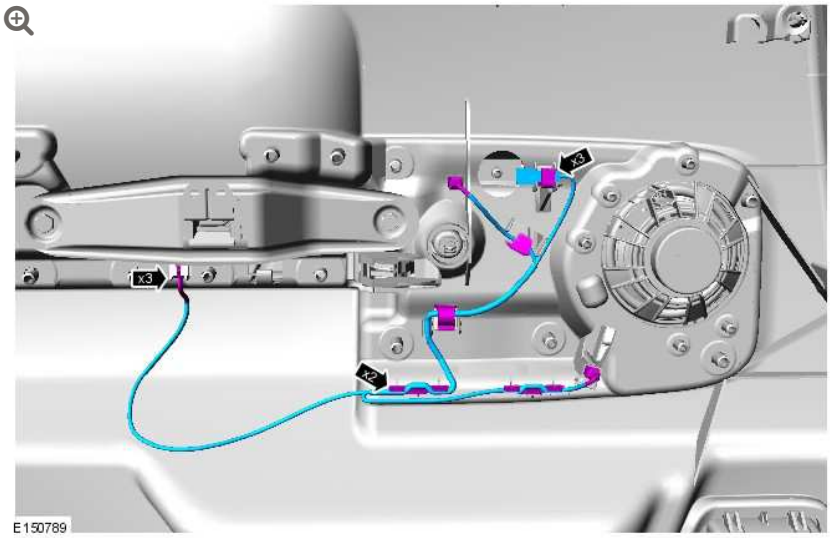

13.

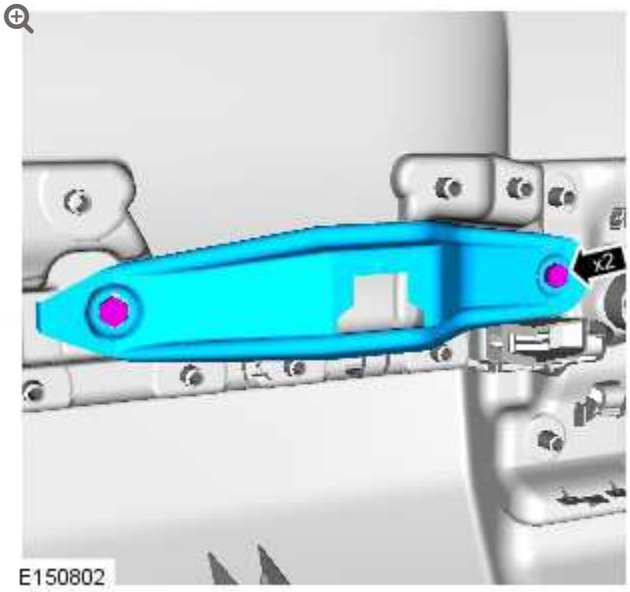

14.

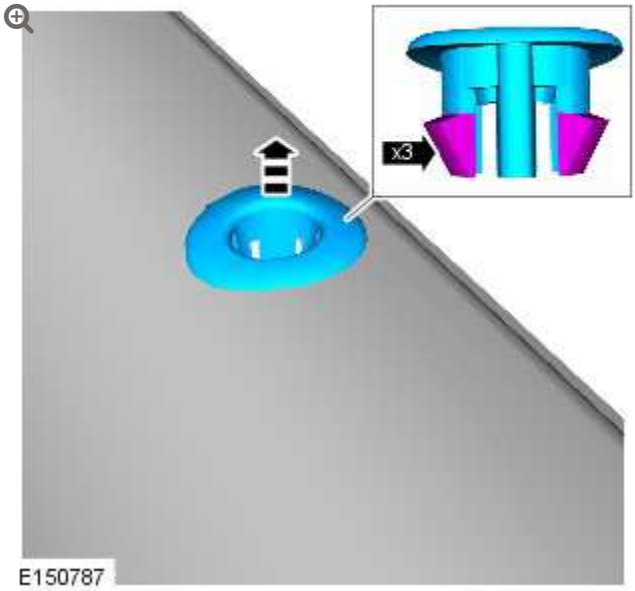

15.



E150693

16.

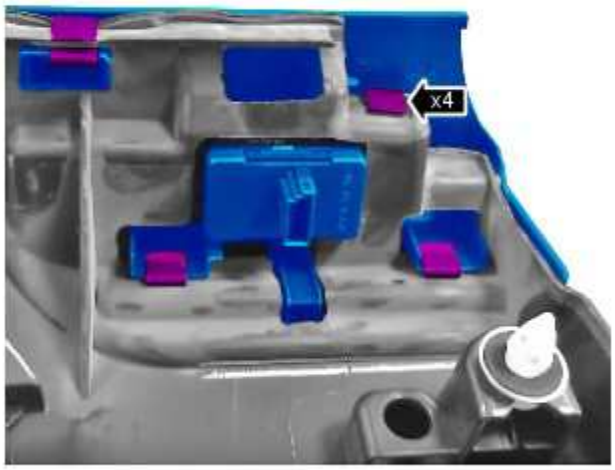

E150694

17.

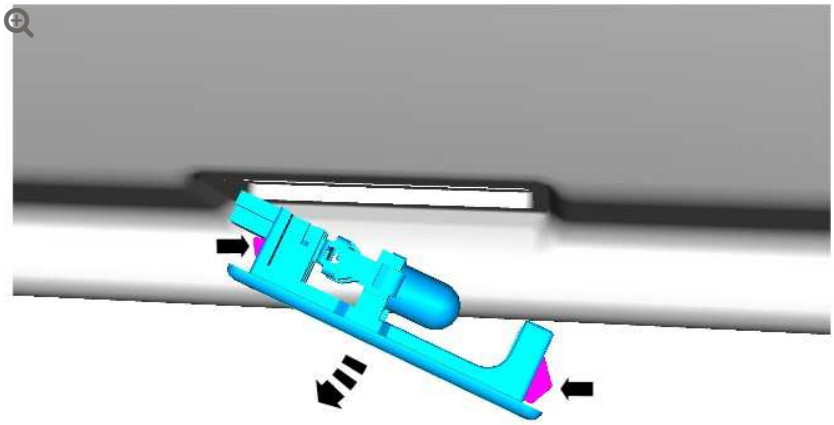

E150661

18.

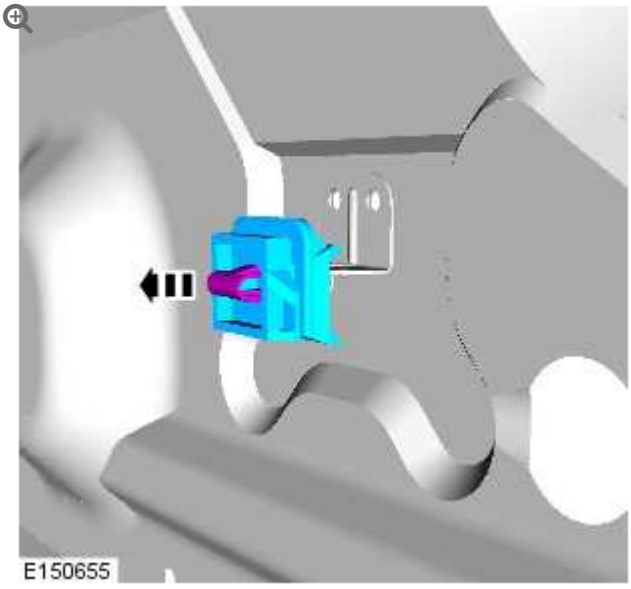

INSTALLATION

1.

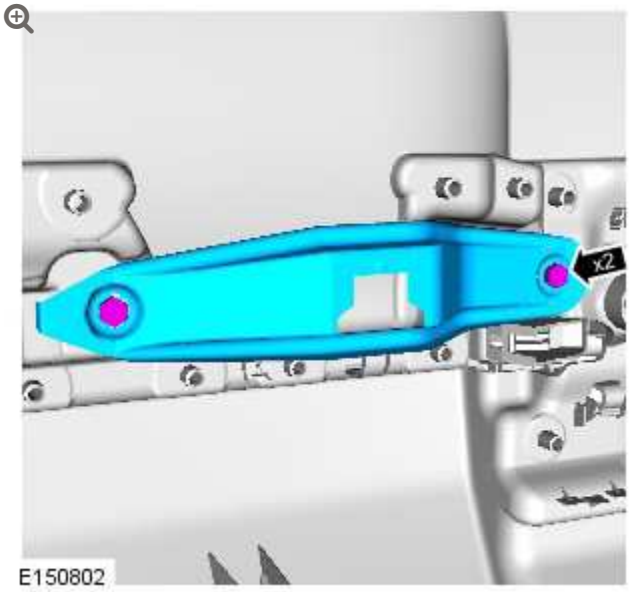

2.

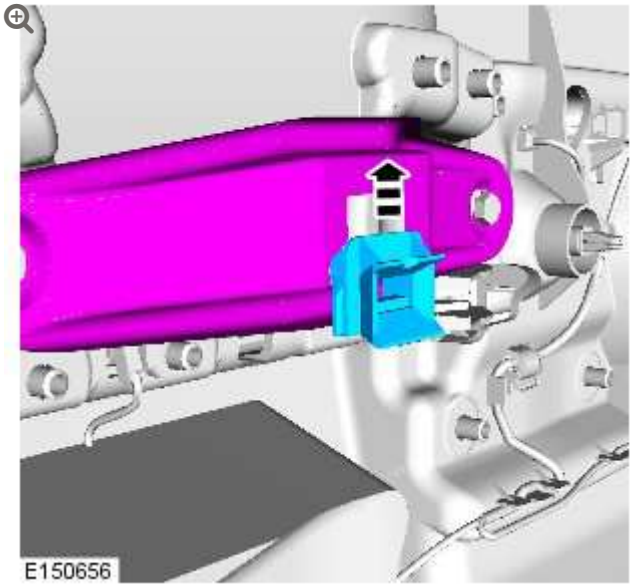

3.

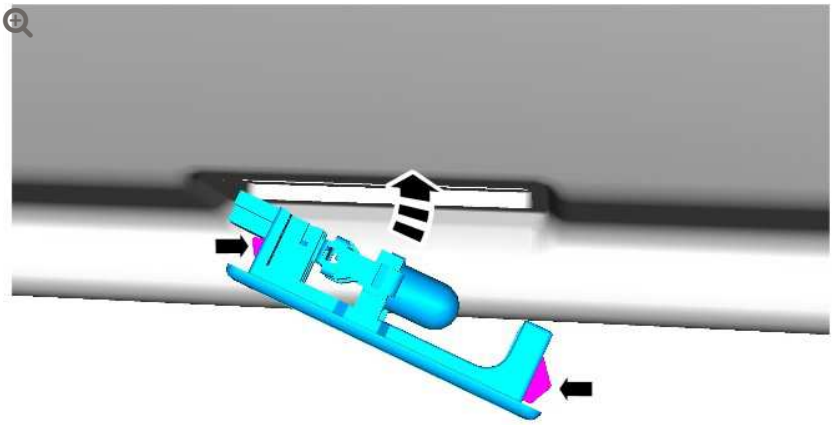

E150662

4.

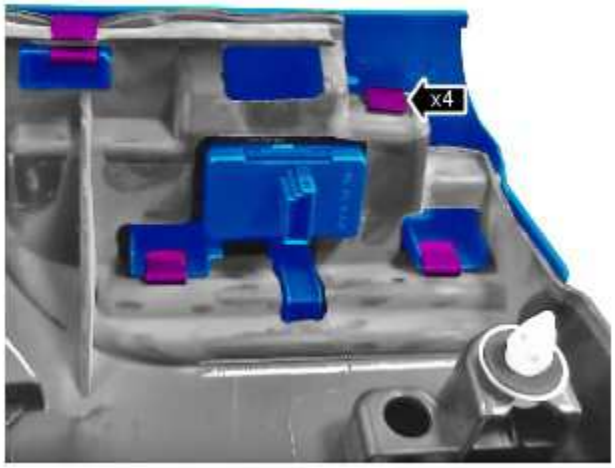

E150694

5.



E150693

6.

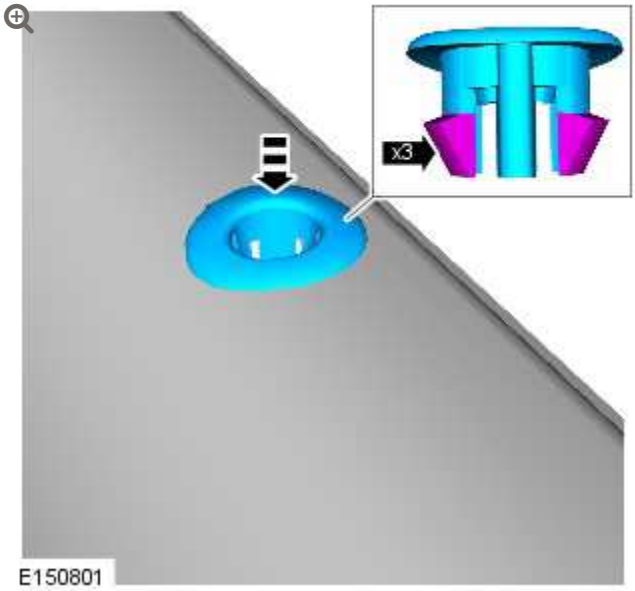

E150801

7.

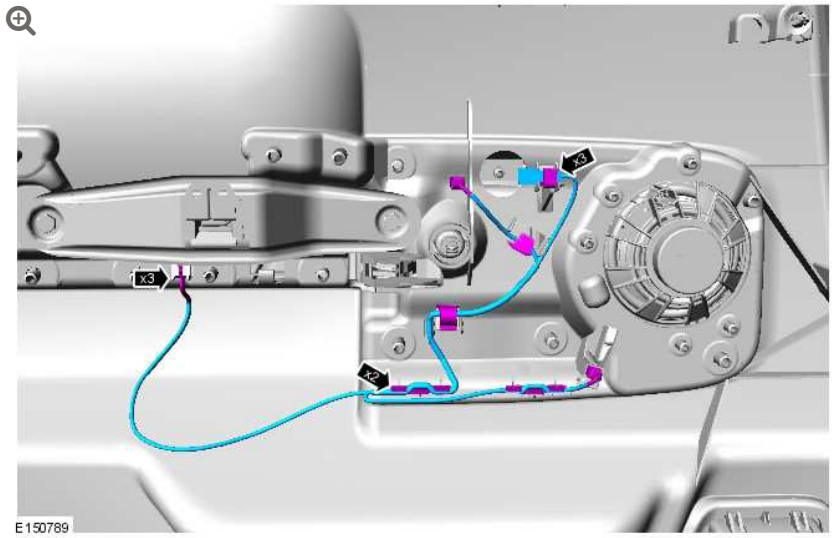

E150789

8.

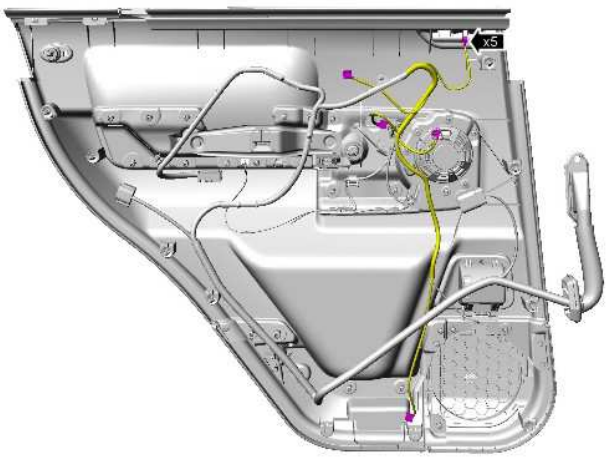

E150791

9.

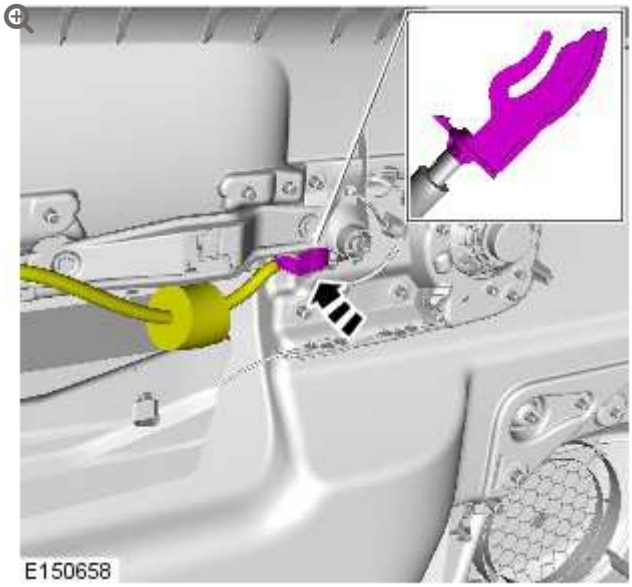

10.

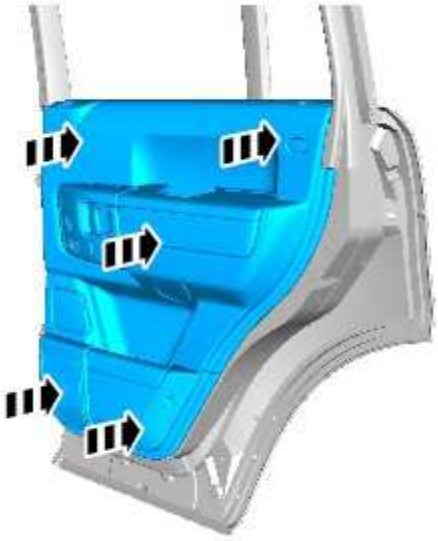

11.

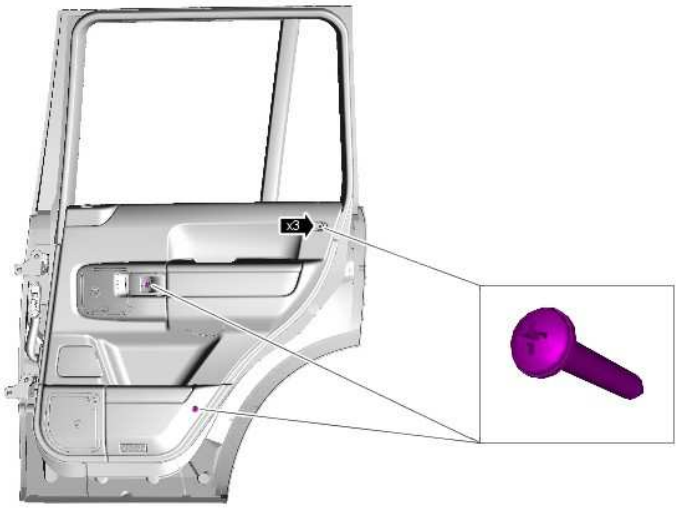

E150788

12.

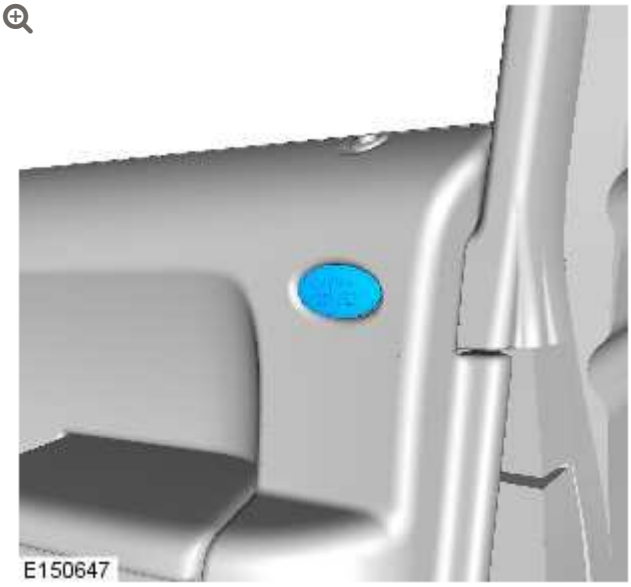

E150647

13.

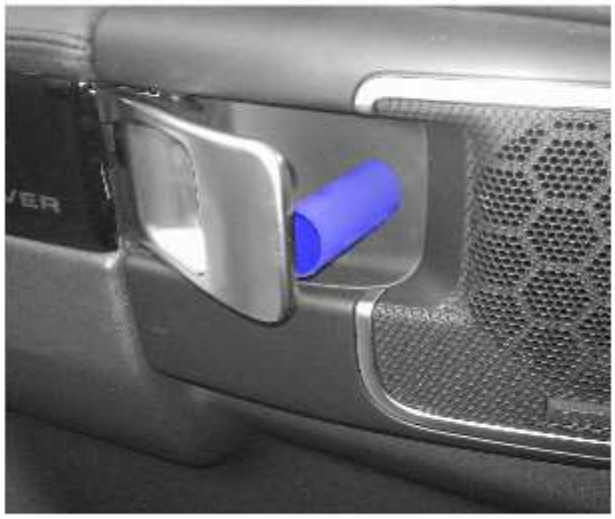

E150794

14.

CAUTION:

Do not use excessive force to install the component.



E150828

INTERIOR TRIM AND ORNAMENTATION

REAR DOOR TRIM PANEL

(G1569076)

REMOVAL AND INSTALLATION

76.34.04	TRIM PANEL - REAR DOOR - RENEW	ALL DERIVATIVES	0.4	USED WITHINS	+

REMOVAL

1. Disconnect the battery ground cable.
   For additional information, refer to: Specifications (414-00 Battery and Charging System - General Information, Specifications).

2.

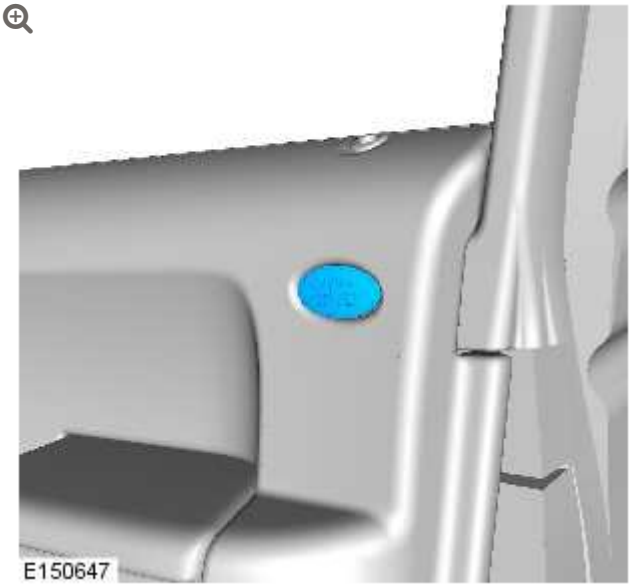

3.

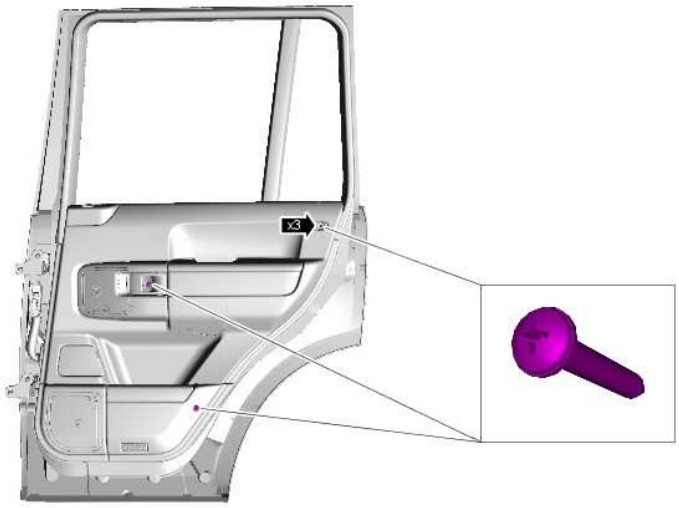

4.

CAUTION:

Carefully release the door trim panel retaining clips.

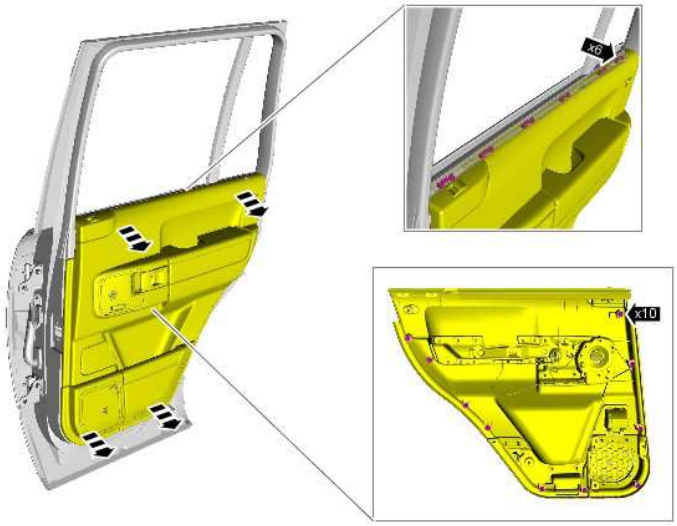

E150785

5.

CAUTION:

Make sure that the top of the door trim panel is clear of the weather strip.

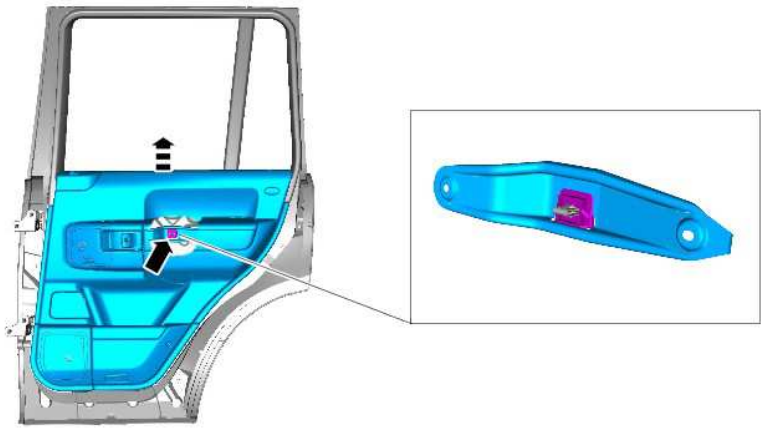

E150786

6.

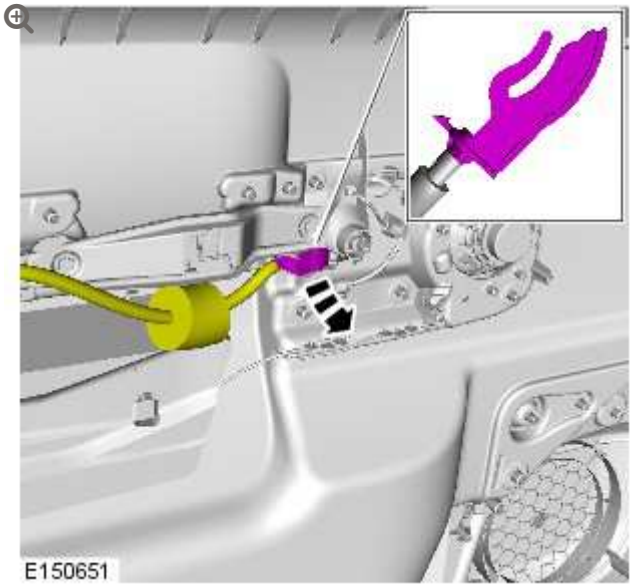

7.

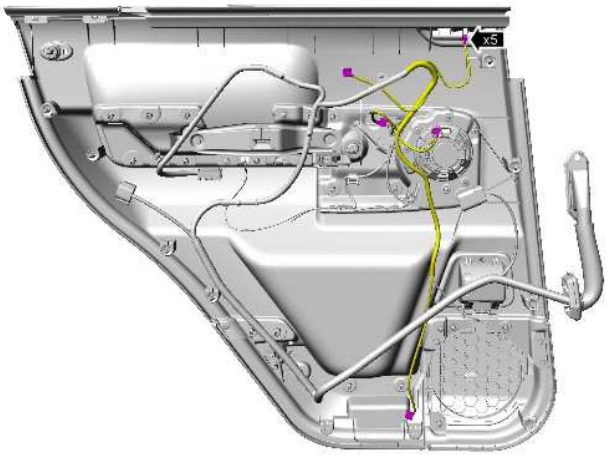

E150791

8.

NOTE:

Do not disassemble further if component is removed for access only.

9.

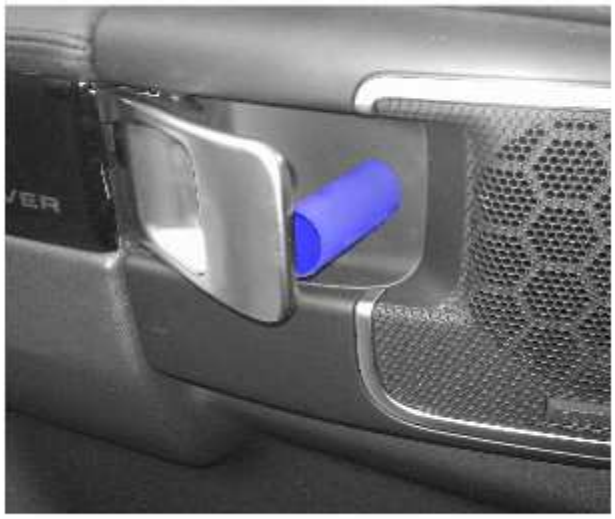

E150794

10.

NOTE:

Using two suitable pieces of laminated plastic, slide under the veneer at the areas illustrated, to aid removal of the component



E150795

11.

CAUTIONS:

- Do not use tools during this operation, removal of the component must be carried out by hand.
- Do not use excessive force to release the component.



12.

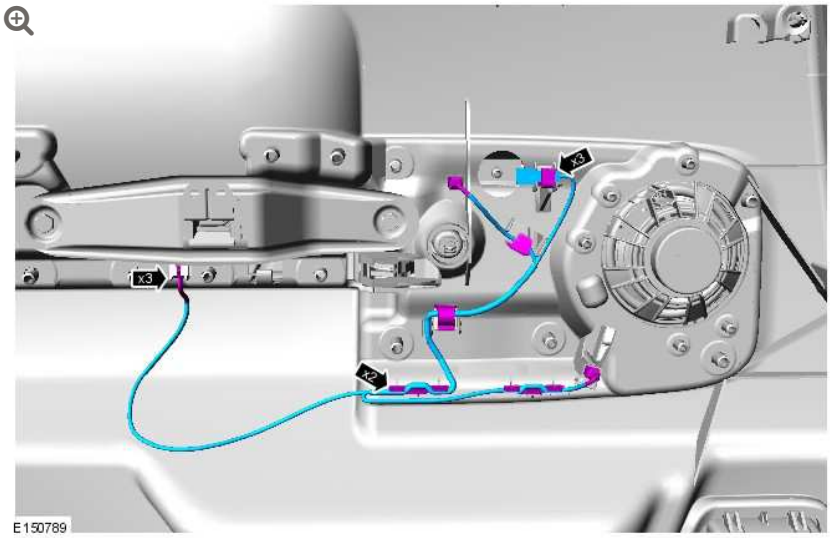

13.

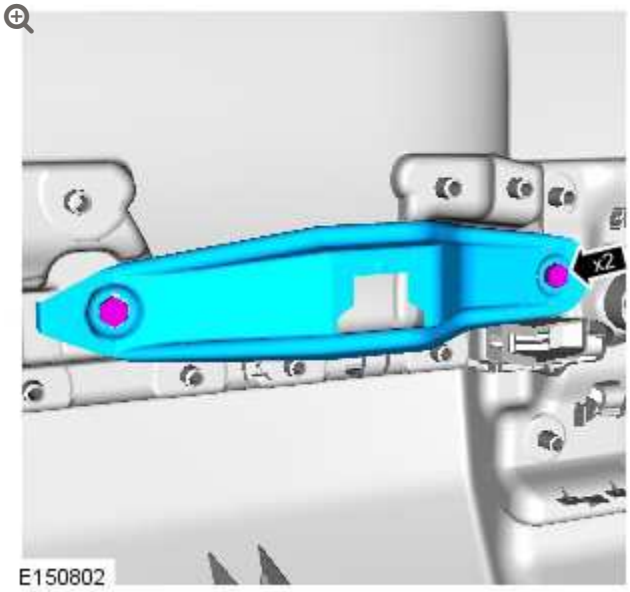

14.

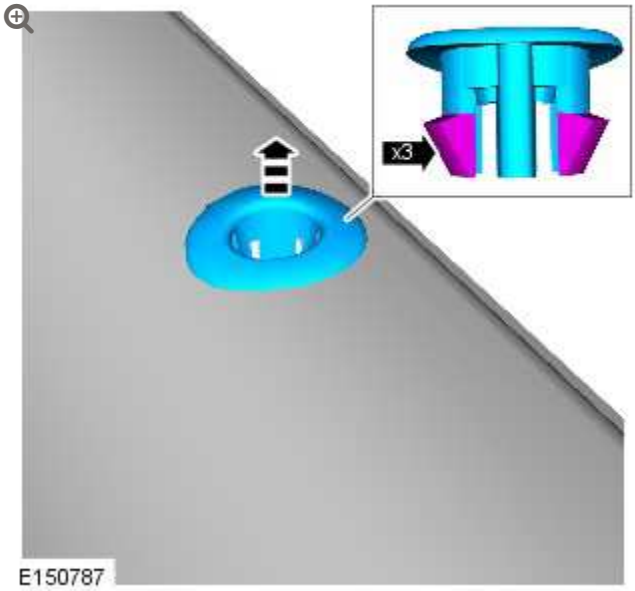

15.



E150693

16.

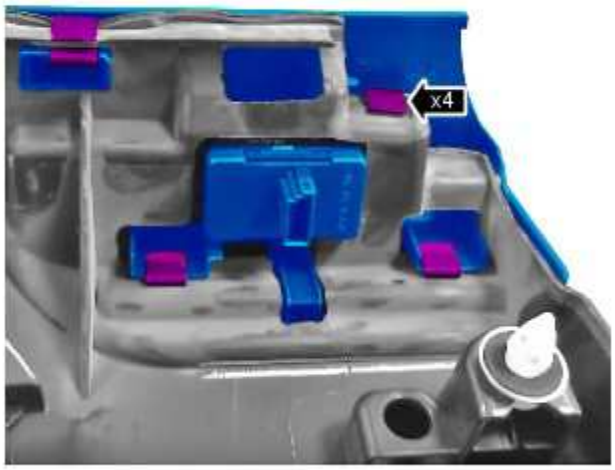

E150694

17.

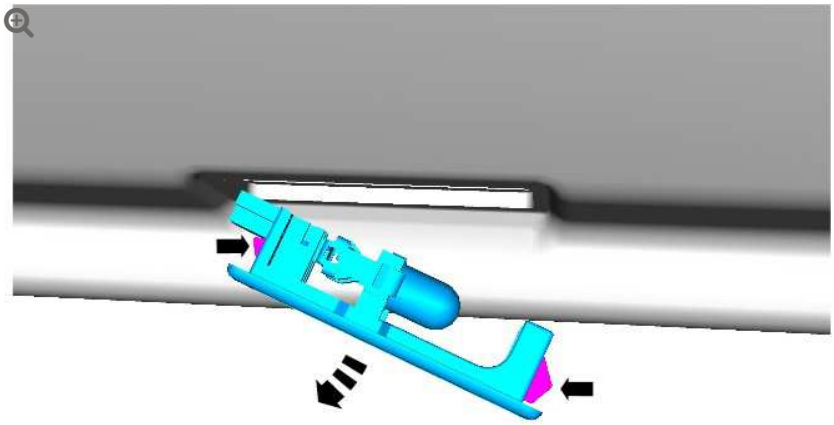

E150661

18.

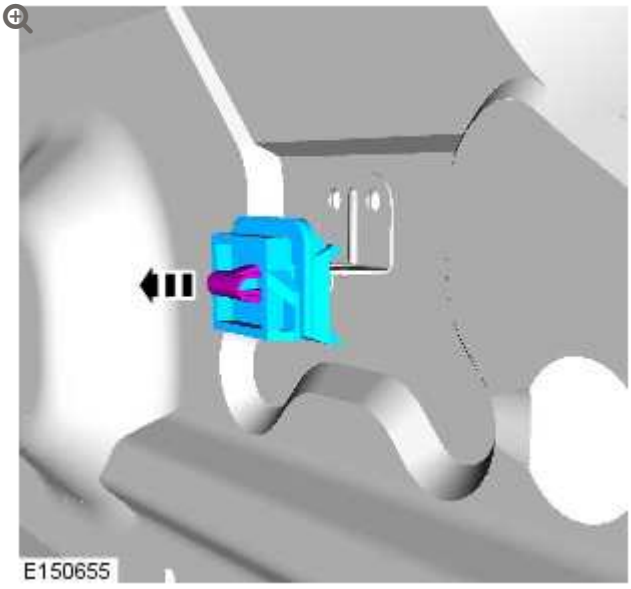

INSTALLATION

1.

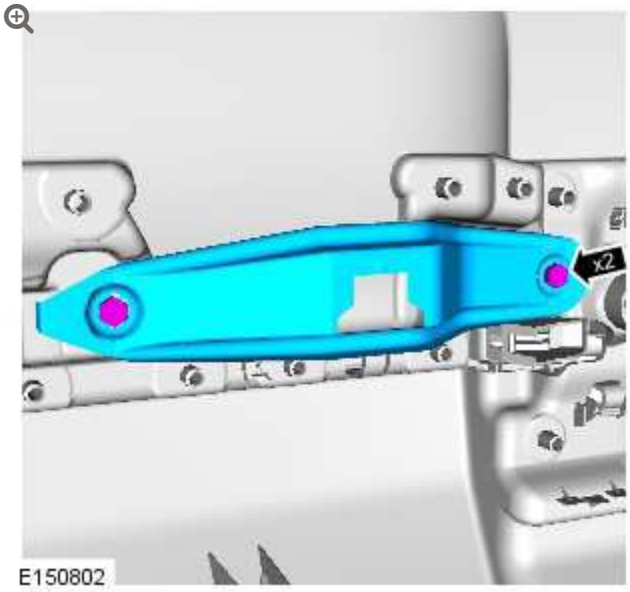

2.

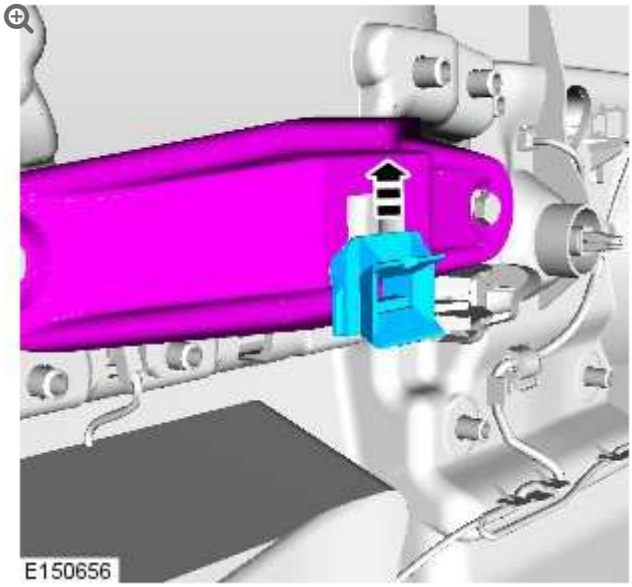

3.

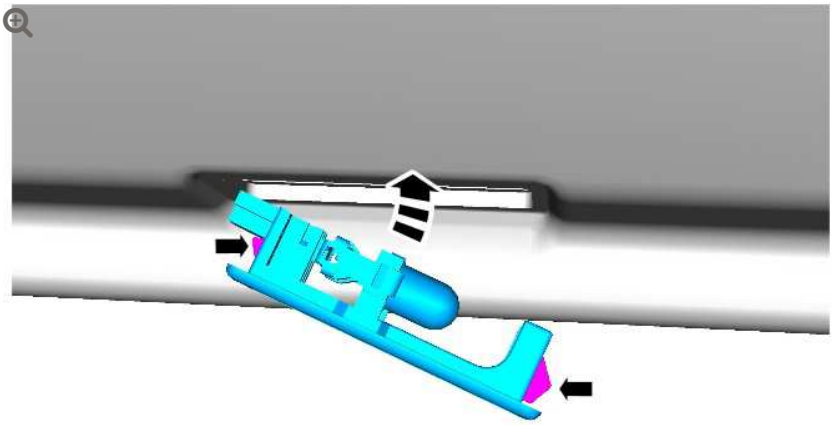

E150662

4.

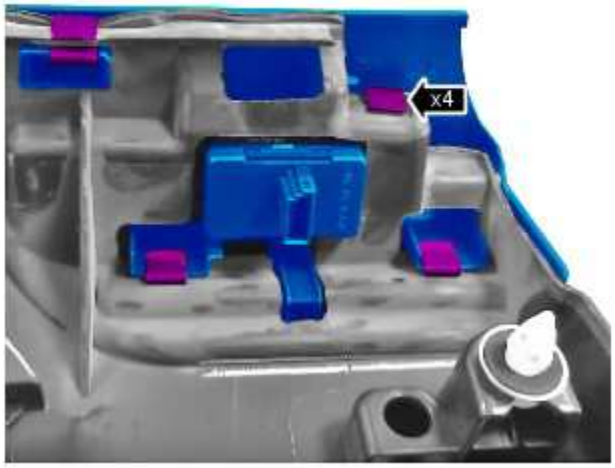

E150694

5.



E150693

6.

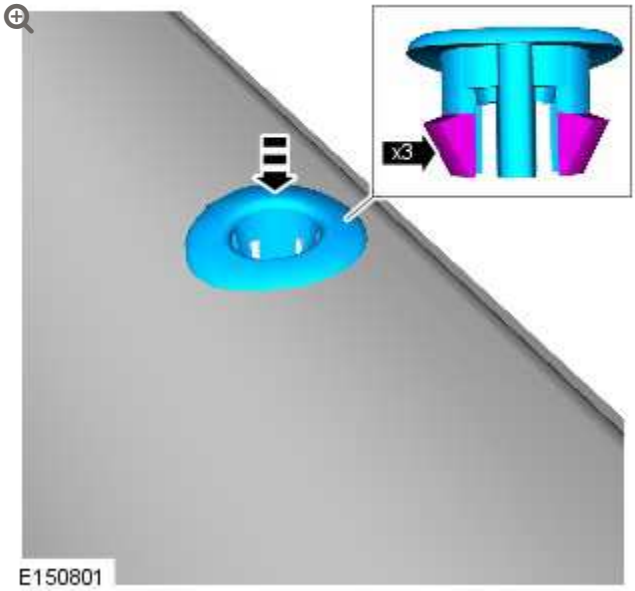

E150801

7.

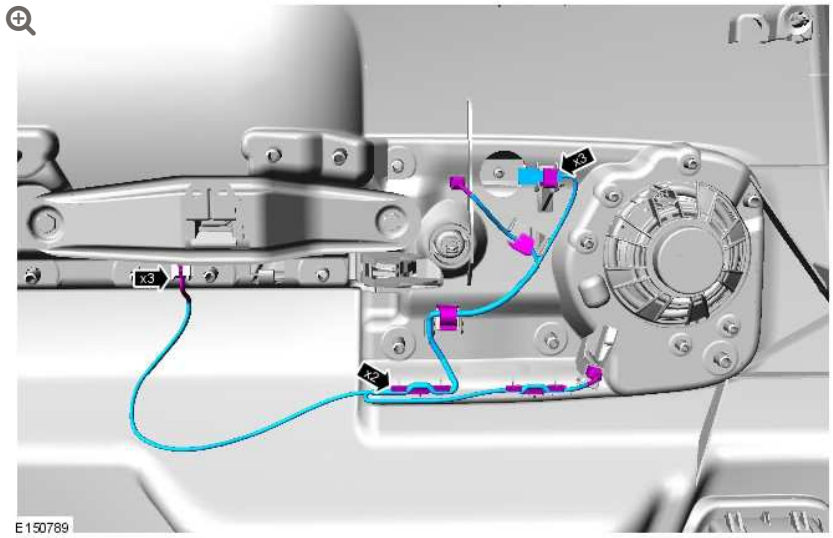

E150789

8.

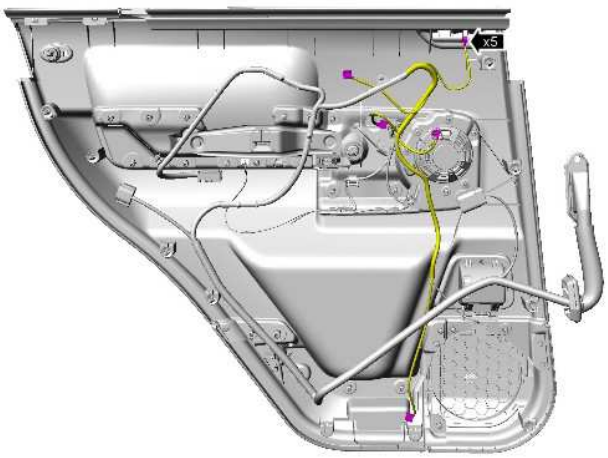

E150791

9.

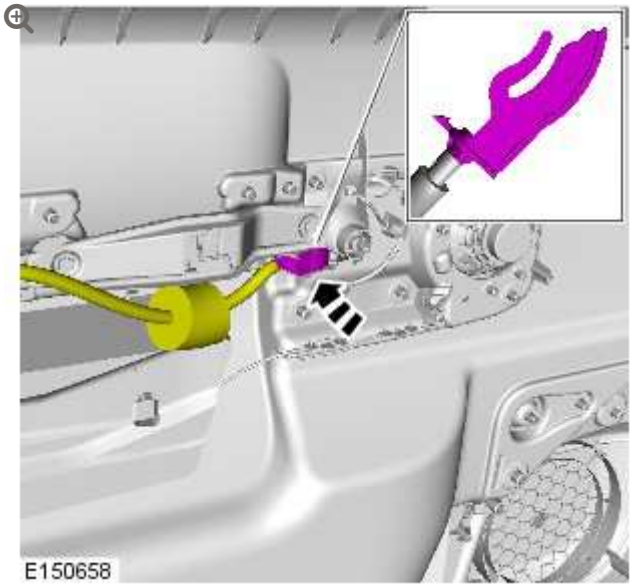

10.

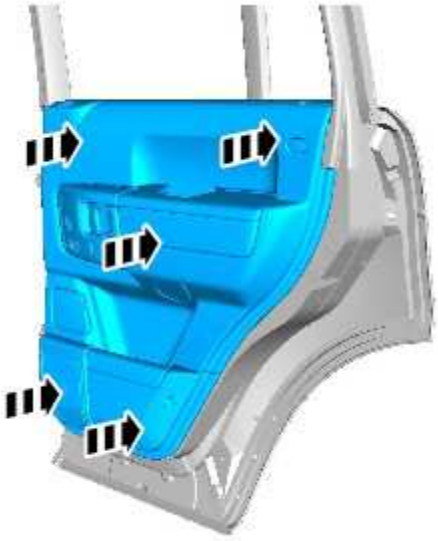

11.

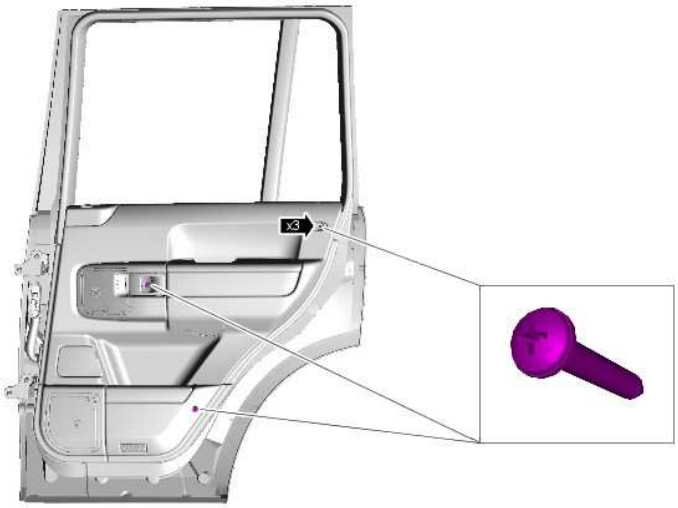

E150788

12.

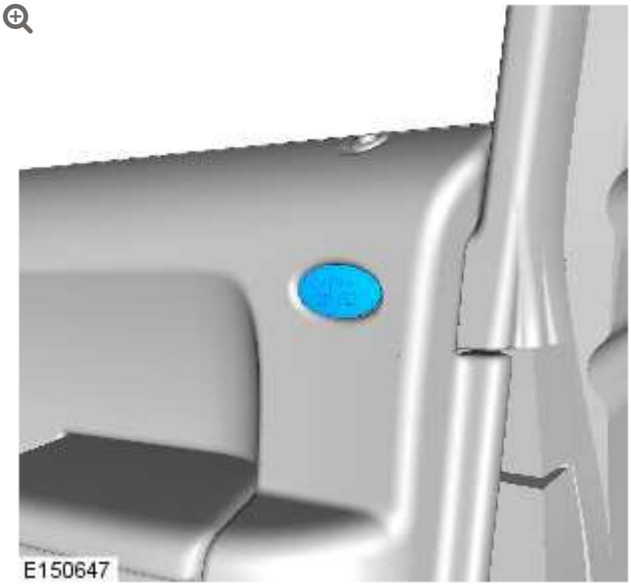

E150647

13.

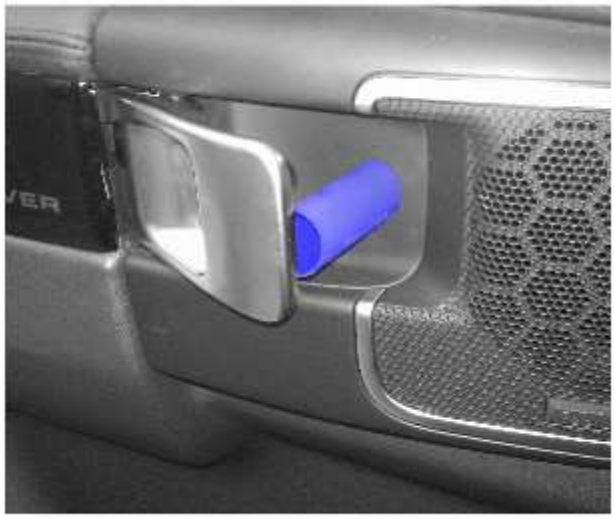

E150794

14.

CAUTION:

Do not use excessive force to install the component.



E150828

REAR DOOR TRIM PANEL FINISH PANEL – ULTIMATE

(G1395259)

REMOVAL AND INSTALLATION

REMOVAL

NOTE:

Removal steps in this procedure may contain installation details.

1. Refer to: Rear Door Trim Panel (501-05, Removal and Installation).
2.

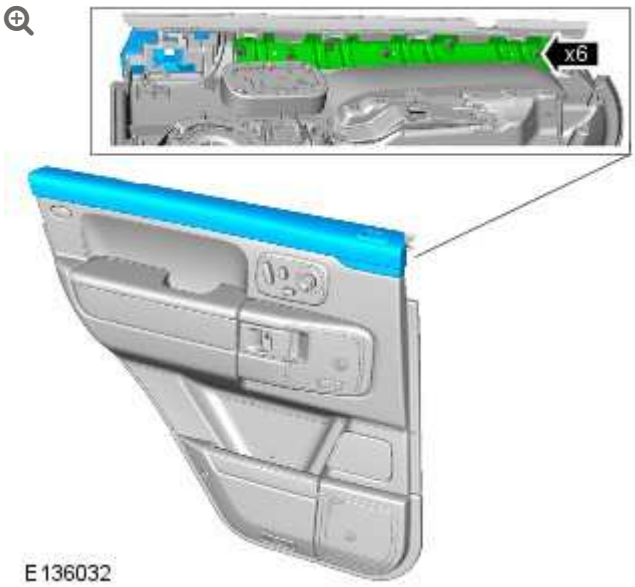

E136032

3.

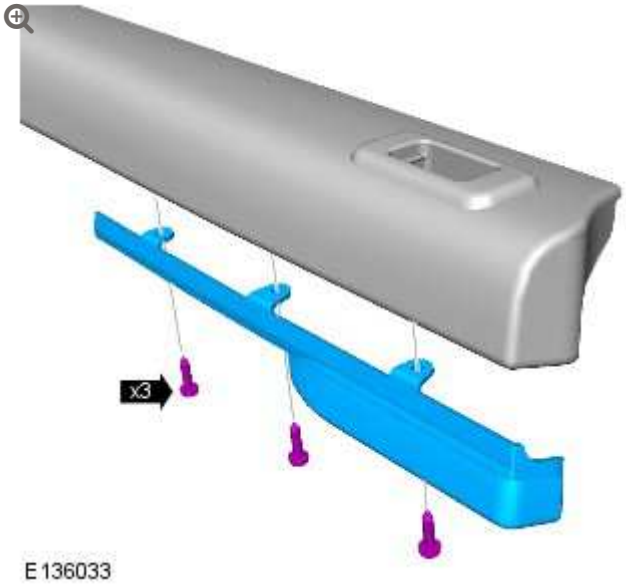

E136033

4.

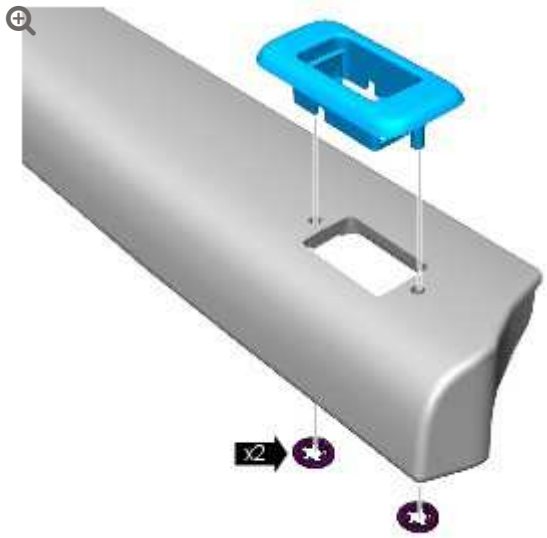

E136034

INSTALLATION

1. To install, reverse the removal procedure.

2012.0 RANGE ROVER (LM), 501-05

INTERIOR TRIM AND ORNAMENTATION

REAR DOOR TRIM VENEER

(G1569072)

REMOVAL AND INSTALLATION

REMOVAL

1.

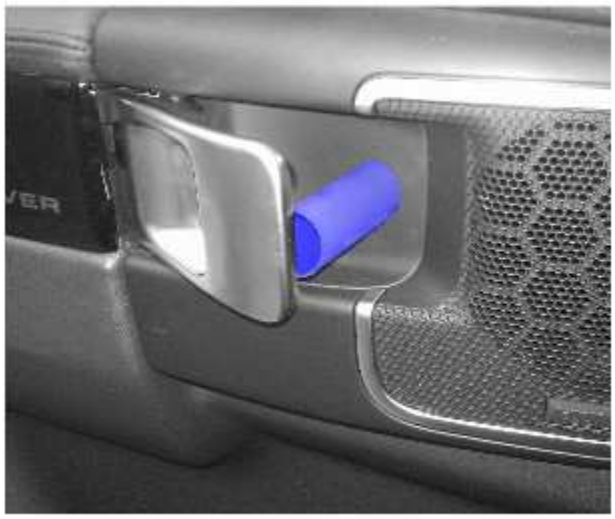

E150794

2.

NOTE:

Using two suitable pieces of laminated plastic, slide under the veneer at the areas illustrated, to aid removal of the component



3.

CAUTIONS:

- Do not use tools during this operation, removal of the component must be carried out by hand.
- Do not use excessive force to release the component.



E150796

INSTALLATION

1.

CAUTION:

Do not use excessive force to install the component.


E150828

INTERIOR TRIM AND ORNAMENTATION

REAR QUARTER TRIM PANEL (G914817)

REMOVAL AND INSTALLATION

76.13.12	TRIM PANEL - REAR QUARTER - LOWER - RENEW	ALL DERIVATIVES	0.3	USED WITHINS	+

REMOVAL

1. Open the liftgate.

2. Release the liftgate aperture seal.

3.

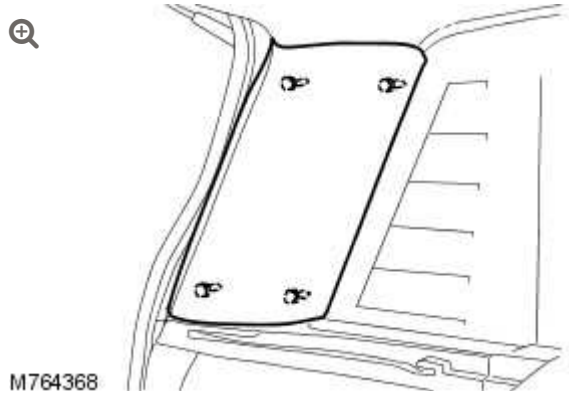

Release the rear quarter trim panel.

- Carefully release the 4 clips.

4. **NOTE:**

> Do not disassemble further if the component is removed for access only.

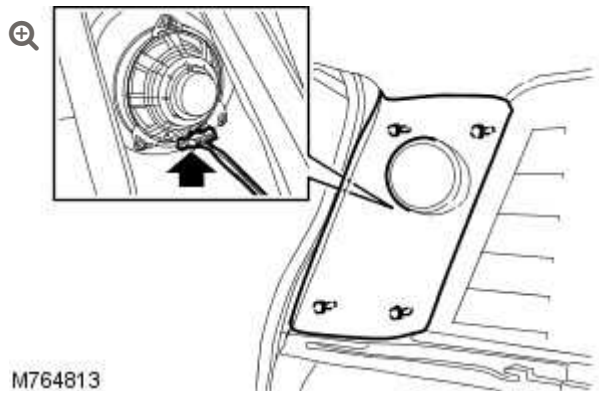

Remove the rear quarter trim panel.

- Disconnect the electrical connector.

5. Remove the quarter panel speaker from the rear quarter trim panel.

- Remove the 3 screws.

6.

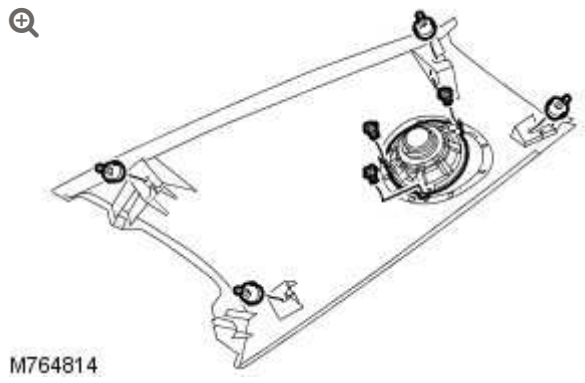

Remove the 4 clips from the rear quarter trim panel.

INSTALLATION

1. Install the 4 new clips to the rear quarter trim panel.
2. Install the rear quarter panel speaker to the rear quarter panel.
   - Install the 3 screws.
3. Install the rear quarter trim panel.
   - Connect the electrical connector.
4. Secure the rear quarter trim panel.
   - Secure the 4 clips.
5. Secure the liftgate aperture seal.

INTERIOR TRIM AND ORNAMENTATION

REAR SCUFF PLATE TRIM PANEL (G928188)

REMOVAL AND INSTALLATION

76.49.18	RETAINER - CARPET - REAR - EACH - RENEW	ALL DERIVATIVES	0.1	USED WITHINS	+

REMOVAL

1. Remove the rear scuff plate trim panel.
   - Using a suitable tool, carefully release the 4 clips.

2. **NOTE:**

   Do not disassemble further if the component is removed for access only.

   Remove the 2 clips from the rear scuff plate trim panel.

INSTALLATION

1. Install the 2 clips to the rear scuff plate trim panel.

2. Install the rear scuff plate trim panel.
   - Secure the 4 clips.

INTERIOR TRIM AND ORNAMENTATION

SUN VISOR (G914818)

REMOVAL AND INSTALLATION

76.10.47	SUN VISOR - EACH - RENEW	ALL DERIVATIVES	0.1	USED WITHINS	+

REMOVAL

1. Release the sun visor from the sun visor clip.

2. 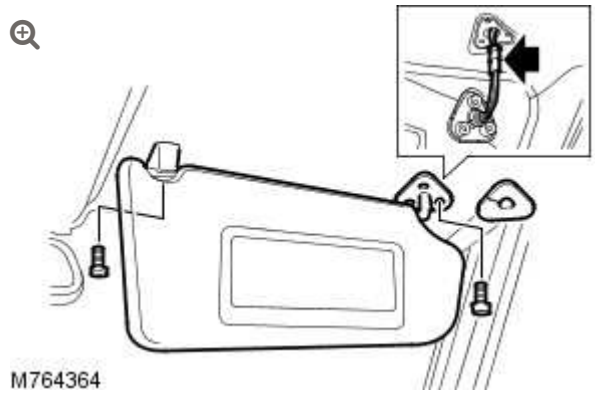

   Remove the sun visor mounting trim panel.

   - Carefully release the sun visor mounting trim panel.

3. Remove the sun visor.

- Remove the 3 screws.
- Disconnect the electrical connector.

4. Remove the sun visor clip from the headliner.
   - Remove the screw.

INSTALLATION

1. Install the sun visor clip to the headliner.
   - Install the screw.

2. Install the sun visor.
   - Connect the electrical connector.
   - Install the 3 screws.

3. Install the sun visor mounting trim panel.
   - Secure the sun visor mounting trim panel.

4. Secure the sun visor to the sun visor clip.

INTERIOR TRIM AND ORNAMENTATION

TAILGATE TRIM PANEL

(G913863)

REMOVAL AND INSTALLATION

76.49.23	CARPET - TAILGATE - RENEW	ALL DERIVATIVES	0.3	USED WITHINS	+

REMOVAL

1.

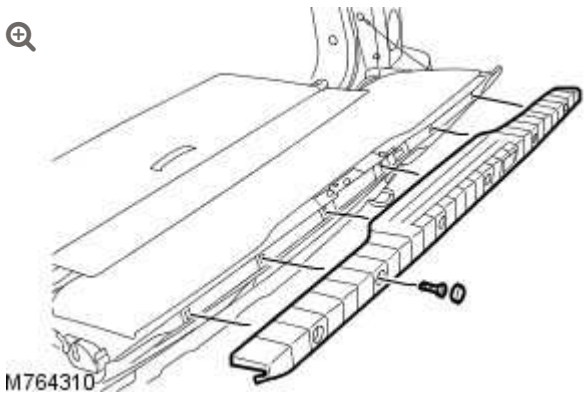

Remove the tailgate upper trim panel.

- Remove the 6 screw covers.
- Remove the 6 screws.

2.

NOTE:

Do not disassemble further if the component is removed for access only.

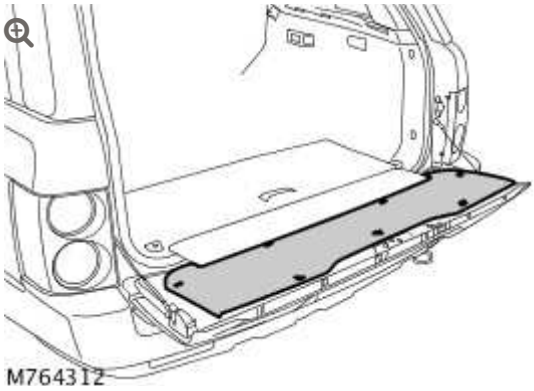

Remove the tailgate trim panel.

- Carefully release the 7 clips.

3. Remove the 7 clips from the tailgate finisher.

4. Remove the acoustic pad.
   - Remove the 7 clips.

INSTALLATION

1. Install the acoustic pad and secure with the clips.

2. Install the tailgate trim panel.
   - Install the clips.

3. Install the tailgate upper trim panel.
   - Install the screw covers.
   - Install the screws.

EXTERIOR TRIM AND ORNAMENTATION

DIAGNOSIS AND TESTING

PRINCIPLES OF OPERATION

For a detailed description of the retractable running board system and operation, refer to the relevant Description and Operation section of the workshop manual. REFER to: (501-08 Exterior Trim and Ornamentation)

Exterior Trim (Description and Operation),
Exterior Trim (Description and Operation),
Exterior Trim (Description and Operation).

INSPECTION AND VERIFICATION

NOTE:

Diagnosis by substitution from a donor vehicle is NOT acceptable. Substitution of control modules does not guarantee confirmation of a fault, and may also cause additional faults in the vehicle being tested and/or the donor vehicle.

1. Verify the customer concern.

2. Visually inspect for obvious signs of mechanical or electrical damage.

Visual Inspection

ELECTRICAL
▪ Battery condition, state of charge ▪ Fuses ▪ Harnesses and connectors ▪ Sensor(s) ▪ Warning lamp bulb(s)

3. If an obvious cause for an observed or reported concern is found, correct the cause (if possible) before proceeding to the next step.

4. If the cause is not visually evident, check for Diagnostic Trouble Codes (DTCs) and refer to the DTC Index.

DTC INDEX

For a list of Diagnostic Trouble Codes (DTCs) that could be logged on this vehicle, please refer to Section 100-00. REFER to: Diagnostic Trouble Code (DTC) Index - DTC: Module Name: Retractable Running Board Module (100-00, Description and Operation).

EXTERIOR TRIM AND ORNAMENTATION

FRONT DOOR LOWER MOULDING (G914233)

REMOVAL AND INSTALLATION

76.42.05	DOOR MOULDING - LOWER FRONT - RENEW	ALL DERIVATIVES	0.3	USED WITHINS	+

REMOVAL

1. **NOTE:**

Do not disassemble further if the component is removed for access only.

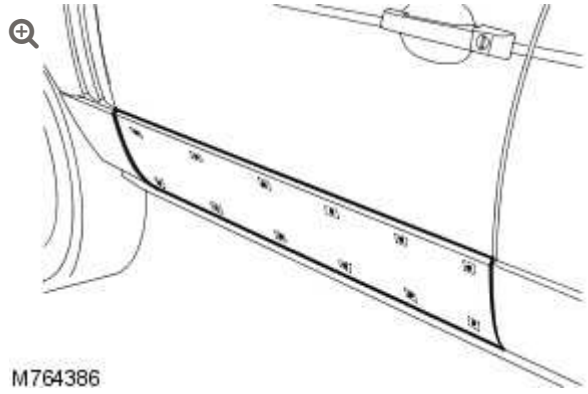

Remove the front door lower moulding.

- Carefully release the 12 clips securing the door lower moulding.

2. Remove the clips from the door lower moulding.

3. Remove the seal from the lower door moulding.

INSTALLATION

1. Install the seal to the lower door moulding.

2. Install the clips to the lower door moulding.

3. Install the door lower moulding to vehicle.

FRONT FENDER MOULDING (G913585)

REMOVAL AND INSTALLATION

REMOVAL

1.

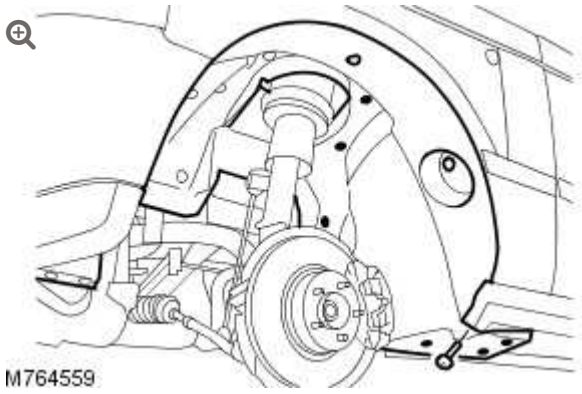

Release the rear lower edge of the fender splash shield for access.

- Remove the 9 screws.

2.

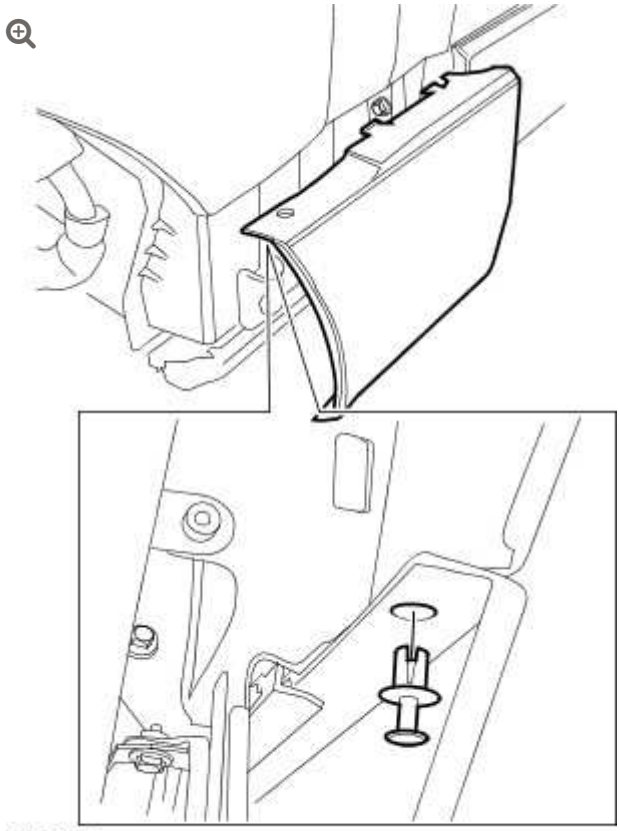

Remove the clip from the front of the fender moulding.

3. Remove the fender moulding.
   - Carefully release the 4 clips.

4. **NOTE:**

   Do not disassemble further if the component is removed for access only.

   Remove the rocker panel seal from the fender moulding.

5. Remove the 2 clips from the fender moulding.

INSTALLATION

1. Install the clips to the fender moulding.
2. Install the rocker panel seal to the fender moulding.
3. Install the fender moulding.
4. Install the clip to the front of the fender moulding.
5. Secure the fender splash shield.

FRONT FENDER TRIM PANEL (G928273)

REMOVAL AND INSTALLATION

76.10.03	PANEL – EXTENSION FRONT FENDER – RENEW	ALL DERIVATIVES	0.2	USED WITHINS	+

REMOVAL

1. Remove the fender moulding.
   For additional information, refer to: Front Fender Moulding (501-08, Removal and Installation).

2. Remove the front fender trim panel.
   - Remove the 2 bolts.

INSTALLATION

1. Install the front fender trim panel to the fender.
   - Tighten the bolts to 3 Nm (2.2 lb.ft).

2. Install the fender moulding.
   For additional information, refer to: Front Fender Moulding (501-08, Removal and Installation).

EXTERIOR TRIM AND ORNAMENTATION

POWER SIDE STEP (G970796)

REMOVAL AND INSTALLATION

REMOVAL

1.

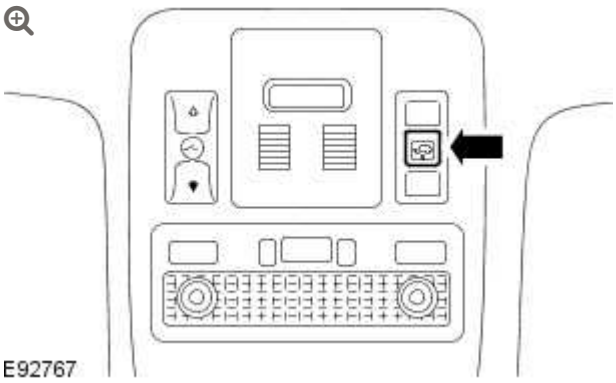

De-activate the power side step.

- Turn the ignition key to position II.
- Press and hold the button for 5 seconds.

2. Disconnect the battery ground cable.
   For additional information, refer to: Specifications (414-00, Specifications).

3.

WARNING:

Do not work on or under a vehicle supported only by a jack. Always support the vehicle on safety stands.

Raise and support the vehicle.

4.

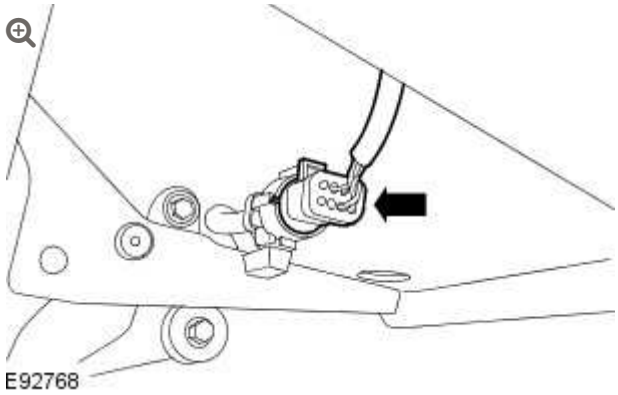

Disconnect the power side step electrical connector.

5.

NOTE:

RH illustration shown, LH is similar.

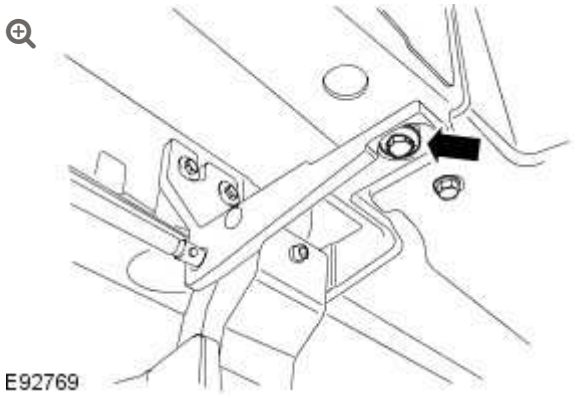

Release the power side step.

- Remove the 2 bolts.

6. **NOTE:**

RH illustration shown, LH is similar.

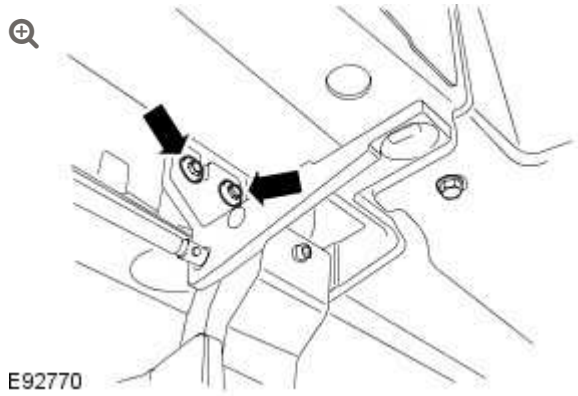

With assistance, remove the power side step.

- Undo but do not remove the 4 bolts.

INSTALLATION

1. With assistance, install the power side step.
2. Secure the power side step.
   - Tighten the 2 bolts to 22 Nm (16 lb.ft).
3. Fully tighten the 4 power side step bolts.
   - Tighten the 4 bolts to 9 Nm (7 lb.ft).
4. Connect the power side step electrical connector.
5. Lower the vehicle on the lift.
6.

Connect the battery ground cable.

For additional information, refer to: Specifications (414-00, Specifications).

7. Activate the power side step.
   - Turn the ignition key to position II.
   - Press and hold the button for 5 seconds.

POWER SIDE STEP HINGE

(G970798)

REMOVAL AND INSTALLATION

REMOVAL

1. Disconnect the battery ground cable.
   For additional information, refer to: Specifications (414-00, Specifications).

2. Remove the power side step motor.
   For additional information, refer to: Power Side Step Motor (501-08, Removal and Installation).

3. 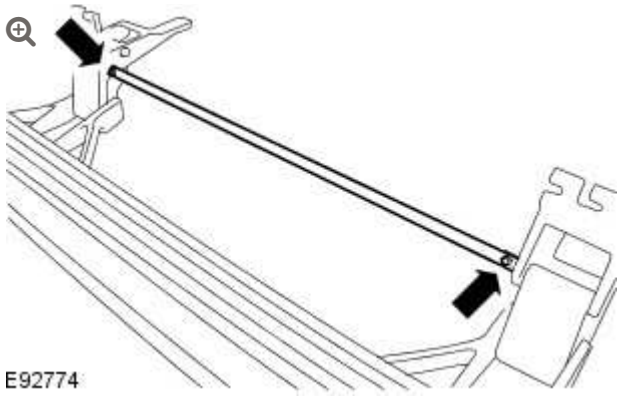

   Remove the power side step tie rod.

- Remove the 2 bolts.
- Collect the 2 spacers.

4.

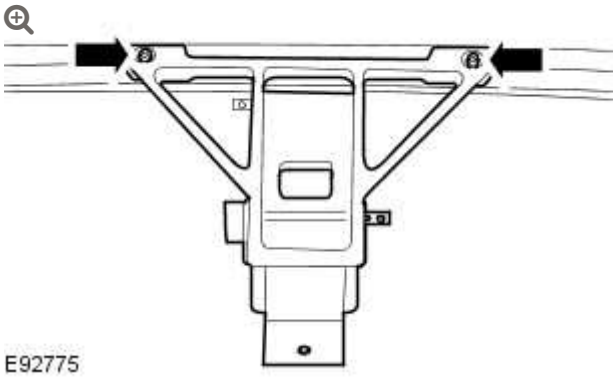

Remove the power side step hinge.

- Remove the 2 bolts.

INSTALLATION

1. Install the power side step hinge.
   - Tighten the 2 bolts to 9 Nm (7 lb.ft).
2. Install the power side step tie rod.
   - Install the 2 spacers.
   - Install but do not fully tighten the 2 bolts.
3. Install the power side step motor.
   For additional information, refer to: Power Side Step Motor (501-08, Removal and Installation).
4. Tighten the power side step tie rod bolts to 6 Nm (4 lb.ft).
5. Connect the battery ground cable.
   For additional information, refer to: Specifications (414-00, Specifications).

EXTERIOR TRIM AND ORNAMENTATION

POWER SIDE STEP MOTOR (G970797)

REMOVAL AND INSTALLATION

REMOVAL

CAUTION:

Make sure that the area around the component is clean and free of foreign material.

1. Disconnect the battery ground cable.
   For additional information, refer to: Specifications (414-00 Battery and Charging System - General Information, Specifications).

2. **WARNING:**

   Make sure to support the vehicle with axle stands.

   Raise and support the vehicle.

3.

Remove the power side step.

For additional information, refer to: Power Side Step (501-08 Exterior Trim and Ornamentation, Removal and Installation).

4.

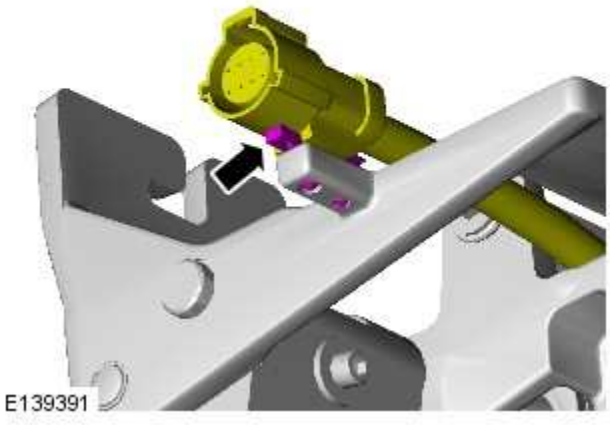

Release the electrical connector.

5.

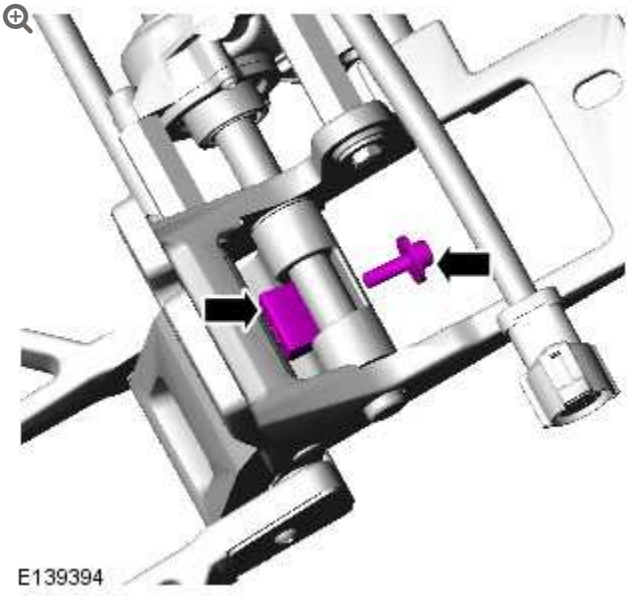

Remove the bolt and the wedge key.

6.

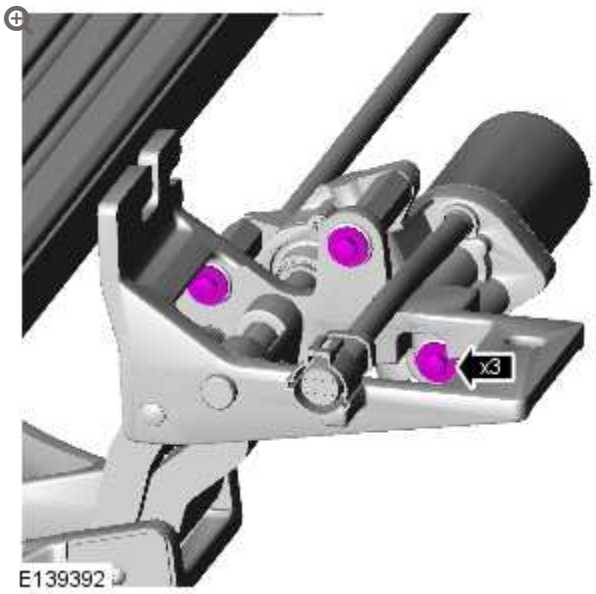

Remove the 3 bolts.

7.

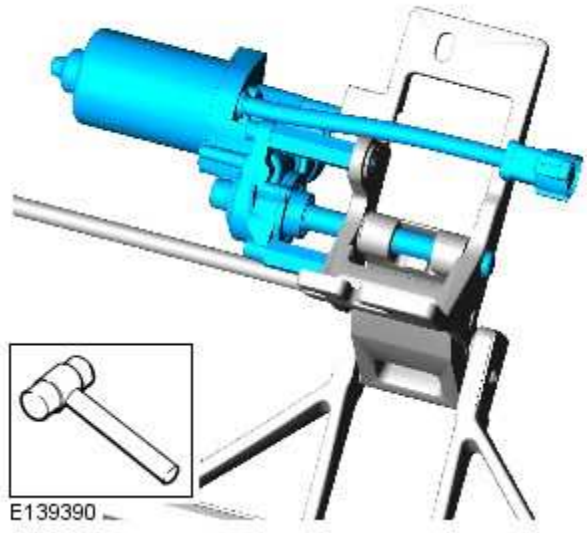

Remove the power side step motor.

INSTALLATION

1.

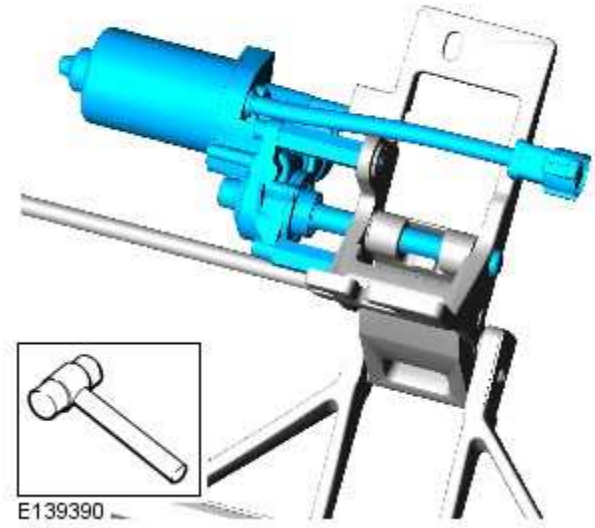

Install the power side step motor.

2.

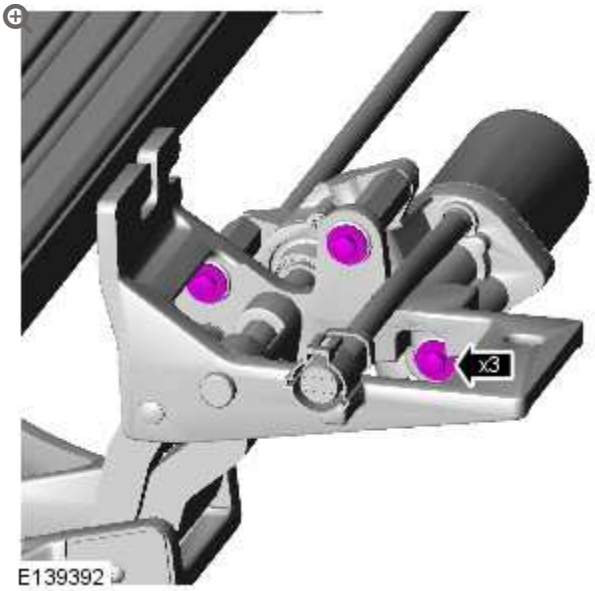

TORQUE: 9 Nm

3.

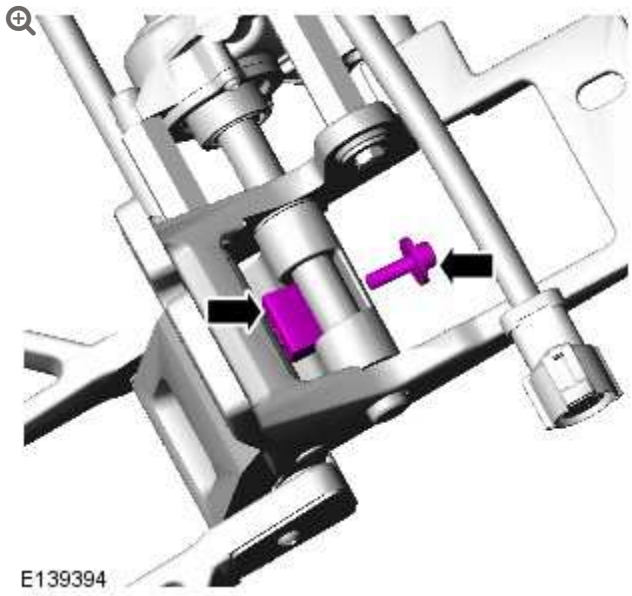

Install the bolt and the wedge key.

4.

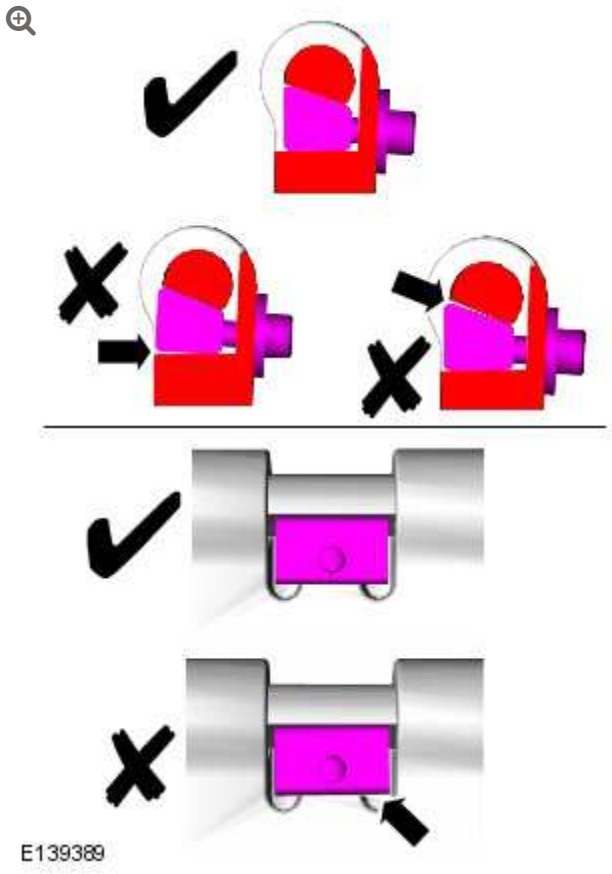

Align the wedge key.

5.

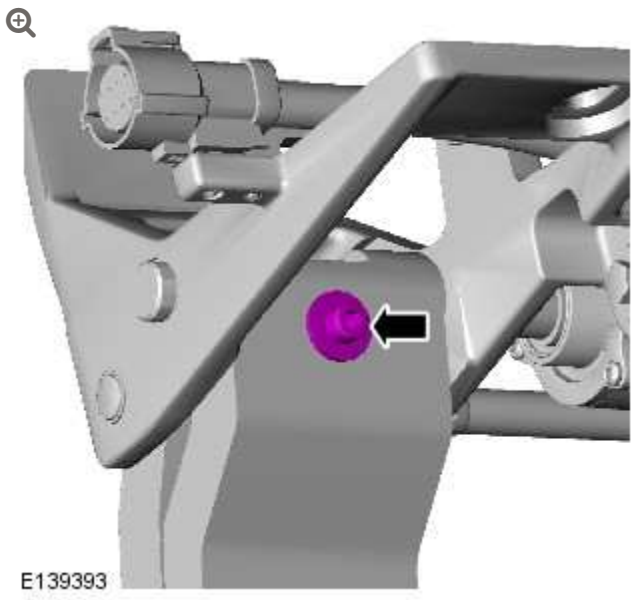

TORQUE: 10 Nm

6.

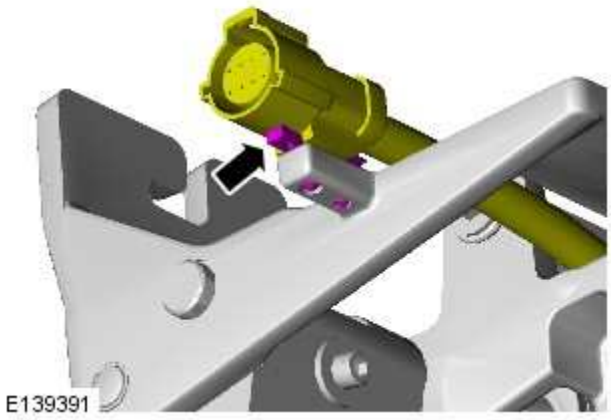

Attach the electrical connector.

7. Install the power side step.
   For additional information, refer to: Power Side Step (501-08 Exterior Trim and Ornamentation, Removal and Installation).

8.

Connect the battery ground cable.

For additional information, refer to: Specifications (414-01 Battery, Mounting and Cables, Specifications).

2012.0 RANGE ROVER (LM), 501-08

EXTERIOR TRIM AND ORNAMENTATION

RADIATOR GRILLE (G452318)

REMOVAL AND INSTALLATION

76.55.03	GRILLE - FRONT - RENEW	ALL DERIVATIVES	0.1	USED WITHINS	+

REMOVAL

1.

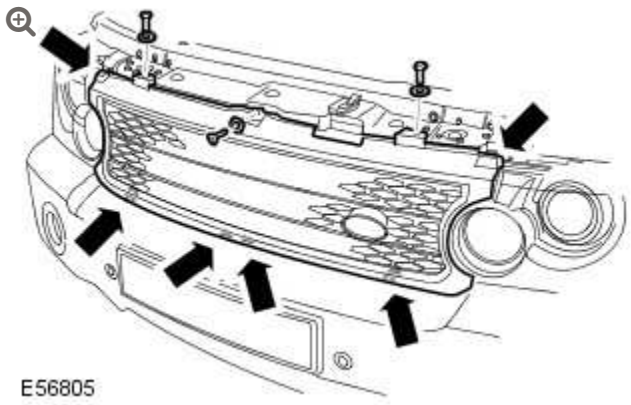

Remove the radiator grille.

- Open the hood.
- Remove the 3 Torx screws.
- Release from the 6 clips.

INSTALLATION

1. To install, reverse the removal procedure.

EXTERIOR TRIM AND ORNAMENTATION

REAR DOOR LOWER MOULDING (G914427)

REMOVAL AND INSTALLATION

76.42.06	DOOR MOULDING - LOWER REAR - RENEW	ALL DERIVATIVES	0.3	USED WITHINS	+

REMOVAL

1.

CAUTION:

Always protect paintwork and glass when removing exterior components.

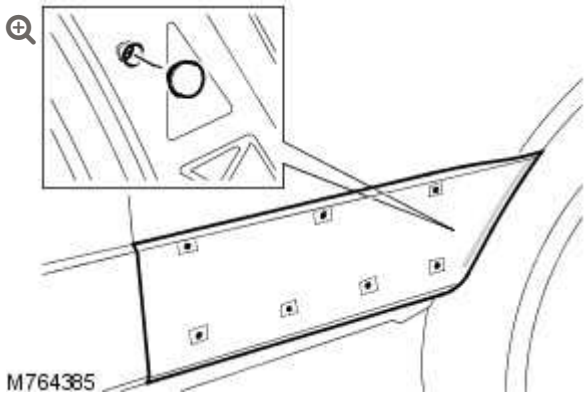

Remove the rear door lower moulding.

- Remove the grommet and screw.
- Release the 7 clips.
- Remove the adhesive tape.

2. **NOTE:**

> Do not disassemble further if the component is removed for access only.

Remove the clips from the rear door lower moulding.

- Remove the seal from the rear door lower moulding.

INSTALLATION

1. Install the clips to the rear door lower moulding.
   - Install the seal to the rear door lower moulding.
2. Install the rear door lower moulding.
   - Apply adhesive tape to the rear door lower moulding.
   - Tighten the screw.

- Install the grommet.

EXTERIOR TRIM AND ORNAMENTATION

REAR FENDER SPLASH SHIELD (G928162)

REMOVAL AND INSTALLATION

76.10.49	LINER - REAR WHEEL ARCH - SINGLE - RENEW	ALL DERIVATIVES	0.4	USED WITHINS	+

REMOVAL

1. **WARNING:**

   Do not work on or under a vehicle supported only by a jack. Always support the vehicle on safety stands.

   Raise the rear of the vehicle.

2.

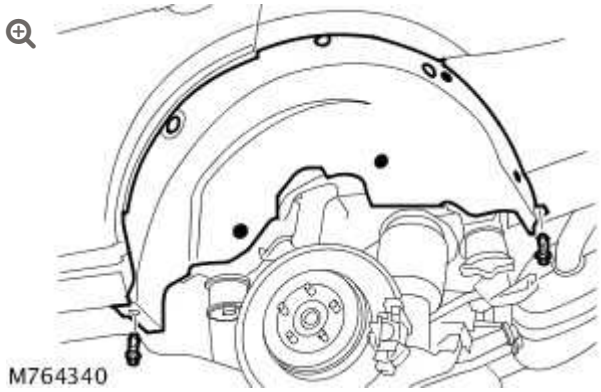

Remove the road wheel.

3. Remove the 2 clips securing the rear fender splash shield to the rocker panel and rear bumper.

4. Remove the 3 plastic nuts securing the rear fender splash shield.

5. Remove the 4 screws securing the rear fender splash shield.

6. Remove the rear fender splash shield.

INSTALLATION

1. Install the rear fender splash shield.
   - Install the plastic nuts.
   - Install the screws.
   - Install the clips.

2. Install the road wheel.
   - Tighten the road wheel nuts to 140 Nm (103 lb.ft).

3. Lower the vehicle.
   - Remove the stands.

REAR QUARTER PANEL MOULDING (G926954)

REMOVAL AND INSTALLATION

REMOVAL

1.

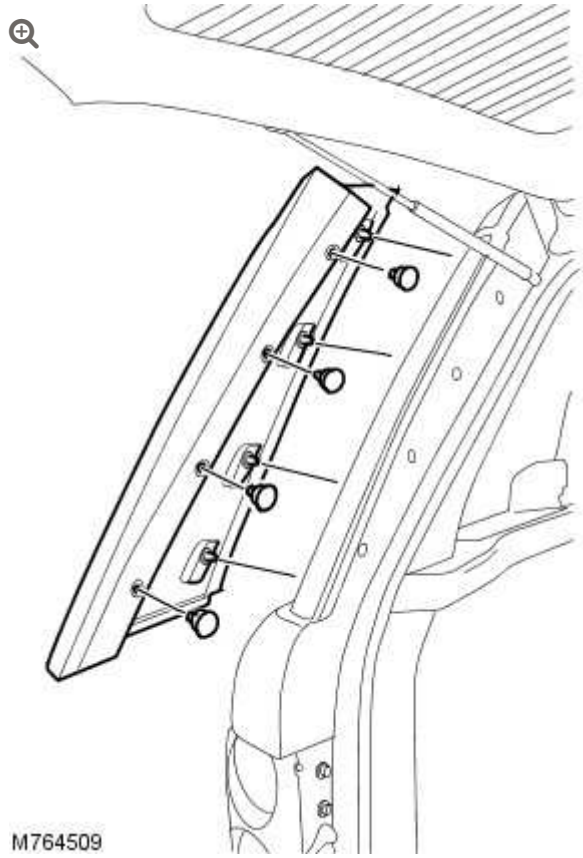

Remove the 4 clips securing the rear quarter panel moulding.

2. **NOTE:**

   Do not disassemble further if the component is removed for access only.

   Remove the rear quarter panel moulding.

   - Release the 4 clips.

3. Remove and discard the rear quarter panel moulding clips.

4. Remove and discard the rear quarter panel clips.

INSTALLATION

1. Install new clips to the rear quarter panel.

2. Install new clips to the rear quarter panel moulding.

3. Install the rear quarter panel moulding.
    - Secure with the clips.

REAR SPOILER (G928365)

REMOVAL AND INSTALLATION

REMOVAL

1. Remove the liftgate upper trim panel.
   For additional information, refer to: Liftgate Upper Trim Panel (501-05, Removal and Installation).

2. 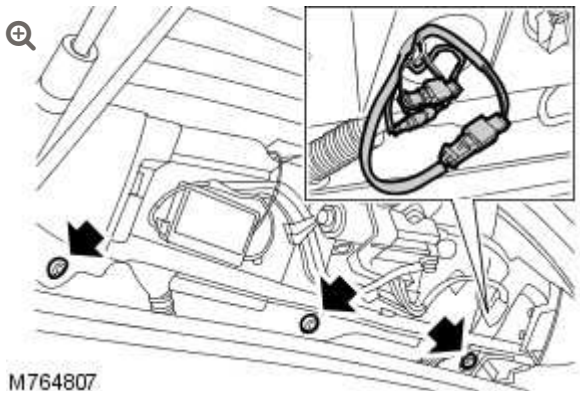

   Remove the 3 bolts securing the rear spoiler to tailgate.

3. Disconnect the electrical connector.

4. If equipped disconnect the electrical connector from the parking aid camera.

5.

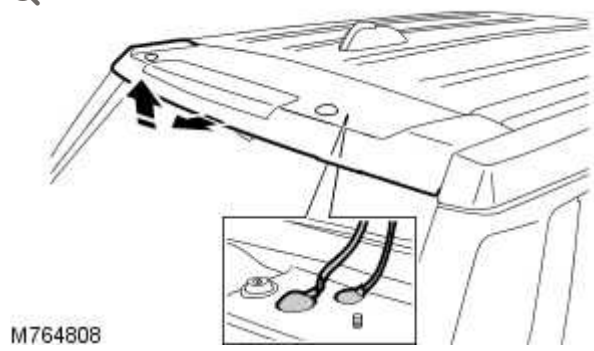

Remove the rear spoiler.

- Carefully release the clips.
- Release the electrical harness.

6.

NOTE:

> Do not disassemble further if the component is removed for access only.

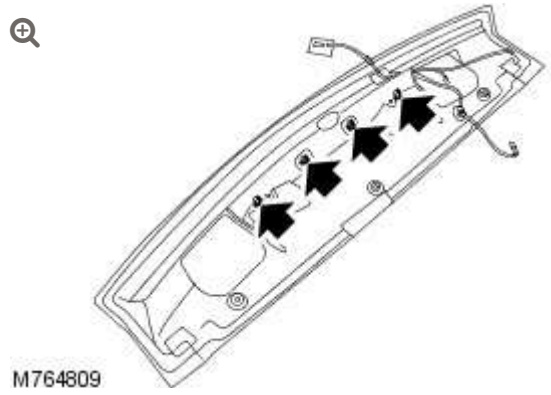

Remove the high mounted stoplamp.

- Remove the 4 screws.
- Remove the wiring harness.

7.

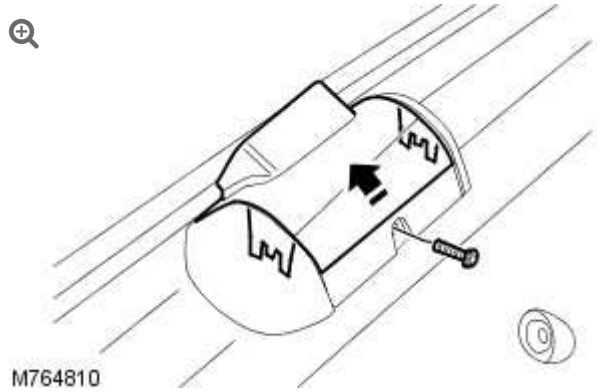

Remove the parking aid camera.

- Remove the screw.
- Carefully release the 2 clips.

8.

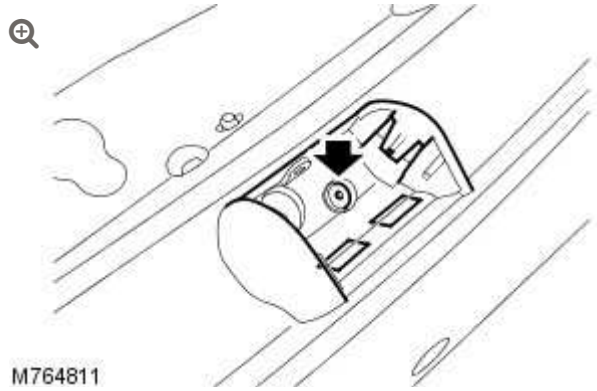

If equipped remove the parking aid camera bracket.

- Drill out the rivet.
- Remove the adhesive pad.

INSTALLATION

1. If equipped install the parking aid camera.
   - Install the rivet.
   - Install the adhesive pad.
2. If equipped install the parking aid camera.

- Install the clips.
- Install the screws.

3. Install the high mounted stoplamp.
   - Secure the wiring harness.
   - Install the screws.

4. Install the rear spoiler to the tailgate.
   - Tighten the bolts to 10 Nm (7 lb.ft).

5. Connect the electrical connector.

6. If equipped connect the electrical connector to the parking aid camera.

7. Install the liftgate upper trim panel.
   For additional information, refer to: Liftgate Upper Trim Panel (501-05, Removal and Installation).

EXTERIOR TRIM AND ORNAMENTATION

ROCKER PANEL MOULDING (G935636)

REMOVAL AND INSTALLATION

76.43.28	MOULDING - ROCKER PANEL - LOWER - RENEW	ALL DERIVATIVES	0.2	USED WITHINS	+

REMOVAL

1.

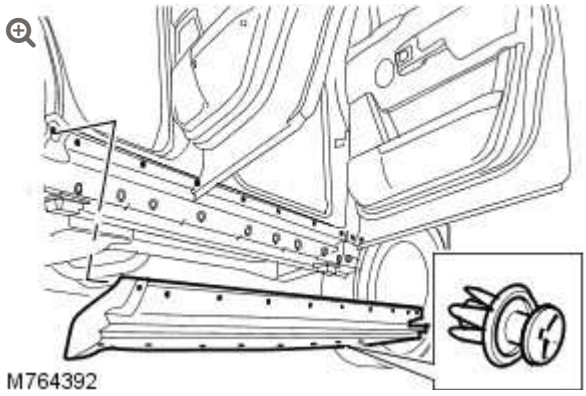

Remove the 8 clips from the underside of the rocker panel moulding.

2.

NOTE:

Do not disassemble further if the component is removed for access only.

Remove the rocker panel moulding.

- Release the 10 clips.

3. Remove the 10 clips from the rocker panel moulding.

INSTALLATION

1. Install the clips to the rocker panel moulding.

2. Install the rocker panel moulding.
   - Secure with the clips.

EXTERIOR TRIM AND ORNAMENTATION

ROOF MOULDING (G928161)

REMOVAL AND INSTALLATION

76.43.68	MOULDING - ROOF - EACH - RENEW	ALL DERIVATIVES	0.2	USED WITHINS	+

REMOVAL

1. 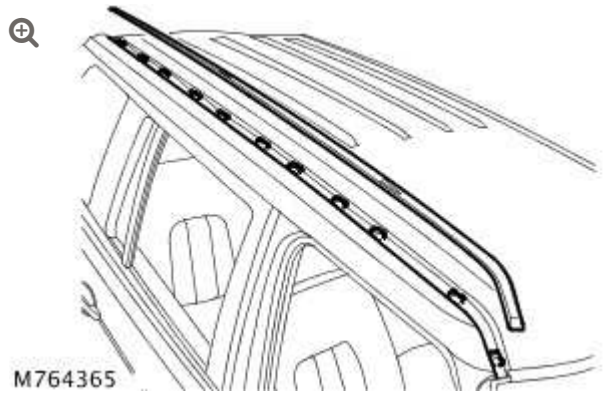

   Remove the roof moulding.

   - Start at the front edge of the roof moulding, raise and release the roof moulding from the 11 clips.

2. Remove the 11 clips from the roof panel.

INSTALLATION

1. Clean the roof moulding recess.

2. Install the clips to the roof moulding.

3. Install the roof moulding.
   - Position and align the clips to the roof panel recess.

EXTERIOR TRIM AND ORNAMENTATION

TAILGATE MOULDING (G928160)

REMOVAL AND INSTALLATION

76.43.99	FINISHER - TAILDOOR/GATE - LOWER - RENEW	ALL DERIVATIVES	0.3	USED WITHINS	+

REMOVAL

1.

CAUTION:

Always protect paintwork and glass when removing exterior components.

NOTE:

Do not disassemble further if the component is removed for access only.

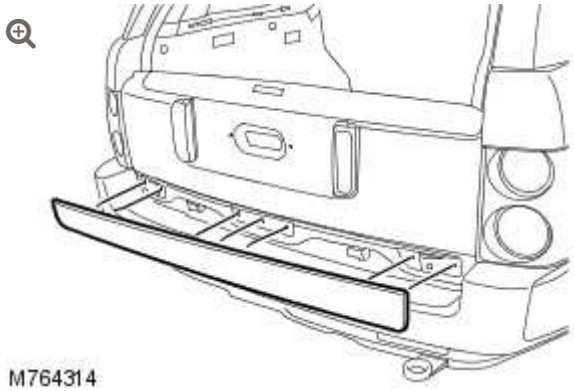

Remove the tailgate trim panel.

- Release the 7 clips.

2. 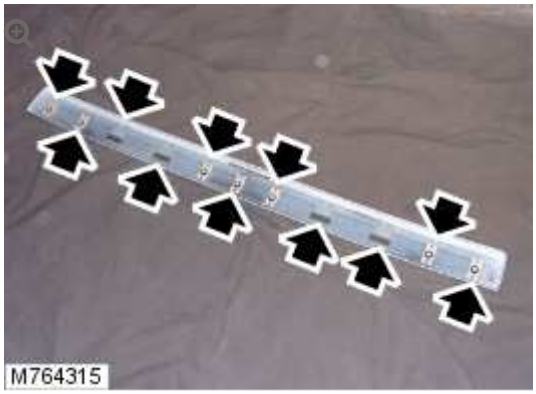

Remove the 7 clips from the tailgate trim panel.

3. Remove and discard the 4 adhesive backed clips from the tailgate trim panel.
   - Note the position of the 4 adhesive backed clips to aid assembly.

INSTALLATION

1. Install the adhesive clips to the tailgate trim panel.

2. Install the clips to the tailgate trim panel.

3. Clean the component mating faces.

4. Install the tailgate trim panel.
   - Remove the protective covering from the adhesive clips.
   - Align and secure the tailgate trim panel clips.
   - Make sure the adhesive clips are secured into position.

2012.0 RANGE ROVER (LM), 501-08

EXTERIOR TRIM AND ORNAMENTATION

TOWBAR (G927760)

REMOVAL AND INSTALLATION

76.11.41	TOWBAR - RENEW	ALL DERIVATIVES	1.4	USED WITHINS

REMOVAL

1. Remove the rear bumper.
   For additional information, refer to: Rear Bumper (501-19, Removal and Installation).

2. 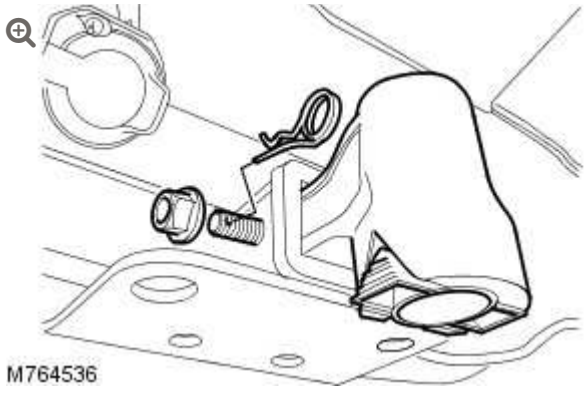

   Remove the towbar locking pin.

3. Remove the towball mounting.
   - Remove the nut and bolt.

4.

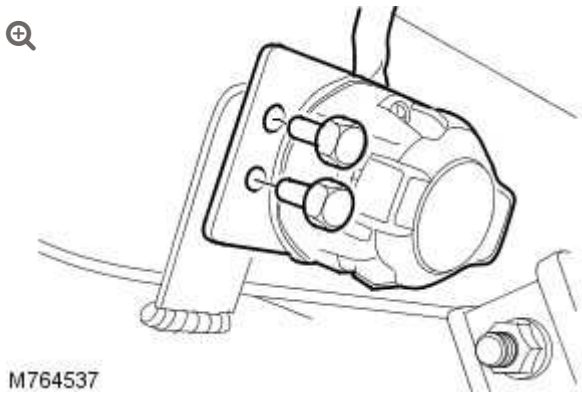

Reposition the towbar electrical connection socket.

- Remove the 2 bolts.

5.

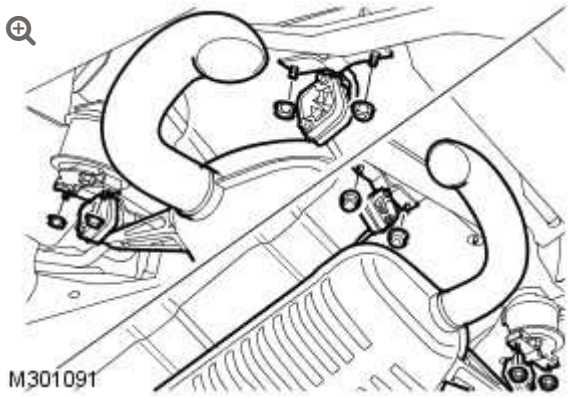

Remove the exhaust mountings from the rear subframe.

- Remove the 4 nuts.

6. Remove the exhaust mountings from the towbar.
   - Support the exhaust assembly.
   - Remove the 4 nuts.

7. Lower the exhaust assembly sufficiently, to gain access to the towbar securing bolts.

8.

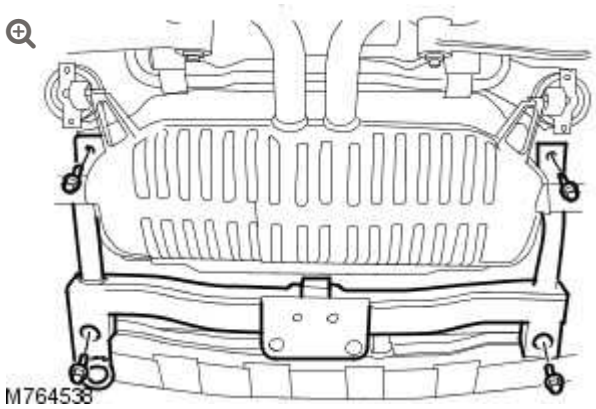

With assistance, remove the towbar.

- Remove the 4 bolts.

INSTALLATION

1. With assistance, install the towbar.
   - Tighten the bolts to 165 Nm (122 lb.ft).
2. Secure the towbar electrical connection socket.
   - Tighten the bolts to 25 Nm (18 lb.ft).
3. Install the exhaust mountings to the towbar and subframe.
   - Raise the exhaust to the original position.
   - Tighten the bolts to 25 Nm (18 lb.ft).
4. Install the towball mounting.
   - Tighten the nut and bolt to 300 Nm (221 lb.ft).
5. Install the towbar mounting locking pin.
6. Install the rear bumper.
   For additional information, refer to: Rear Bumper (501-19, Removal and Installation).

REAR VIEW MIRRORS

EXTERIOR MIRROR (G455062)

REMOVAL AND INSTALLATION

76.11.10	EXTERIOR MIRROR ASSEMBLY (ELECTRICALLY OPERATED) - LH/EACH - RENEW	ALL DERIVATIVES	0.7	USED WITHINS	+

REMOVAL

1. Remove the front door trim panel.
   For additional information, refer to: Front Door Trim Panel (501-05, Removal and Installation).

2.

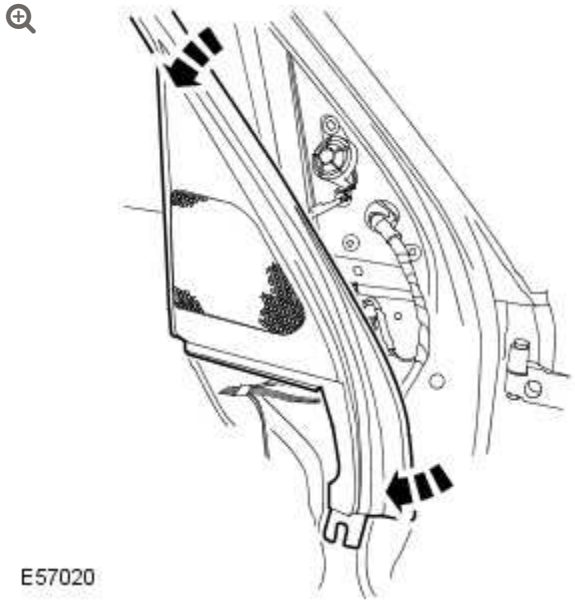

Release the window surround trim panel.

3.

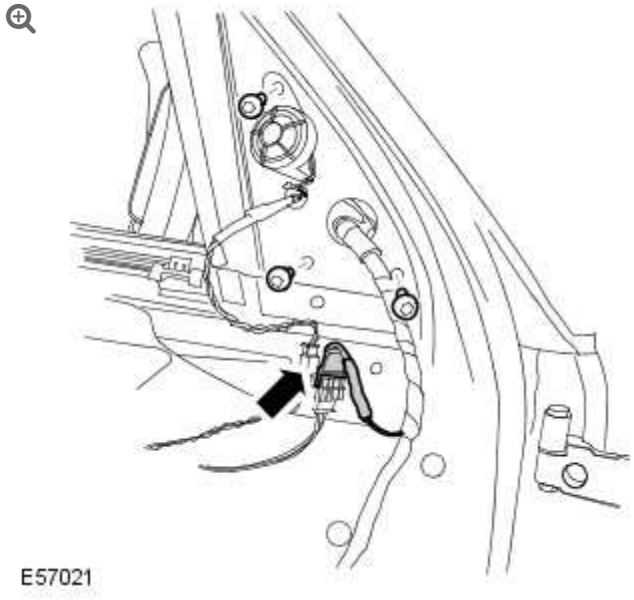

Remove the exterior mirror.

- Remove the 3 Torx screws.
- Disconnect the electrical connector.

INSTALLATION

1. Install the interior mirror.
   - Tighten the Torx screws to 8 Nm (6 lb.ft).
   - Connect the electrical connector.
2. Secure the window surround trim panel.
3. Install the front door trim panel.
   For additional information, refer to: Front Door Trim Panel (501-05, Removal and Installation).

2012.0 RANGE ROVER (LM), 501-09

REAR VIEW MIRRORS

EXTERIOR MIRROR GLASS

(G1236369)

REMOVAL AND INSTALLATION

76.11.08	GLASS - EXTERIOR MIRROR (ELECTRIC) - RENEW	ALL DERIVATIVES	0.1	USED WITHINS	+

REMOVAL

1.

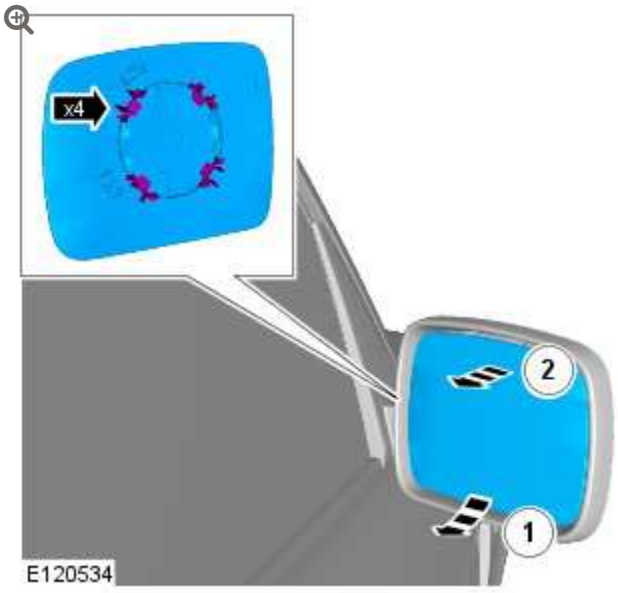

2.

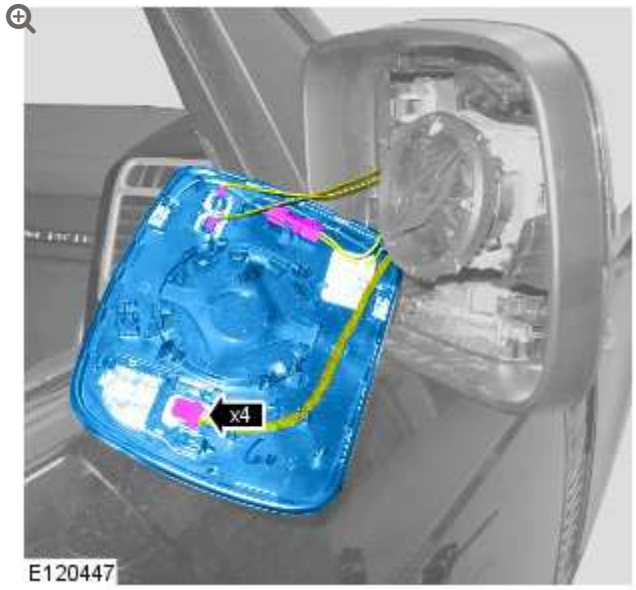

INSTALLATION

1. To install, reverse the removal procedure.

REAR VIEW MIRRORS

EXTERIOR MIRROR MOTOR (G927833)

REMOVAL AND INSTALLATION

76.11.09	MOTOR - EXTERIOR MIRROR - RENEW	ALL DERIVATIVES	0.1	USED WITHINS	+

REMOVAL

1. Remove the exterior mirror glass.
   For additional information, refer to: Exterior Mirror Glass (501-09, Removal and Installation).

2. 

   Remove the exterior mirror motor.

   - Remove the screw.

- Release the 3 clips.
- Disconnect the electrical connector.

INSTALLATION

1. Install the exterior mirror motor.
   - Connect the electrical connector.
   - Secure the clips.
   - Install the screw.
2. Install the exterior mirror glass.
   For additional information, refer to: Exterior Mirror Glass (501-09, Removal and Installation).

REAR VIEW MIRRORS

INTERIOR REAR VIEW MIRROR (G914093)

REMOVAL AND INSTALLATION

76.10.51	MIRROR - INTERIOR - RENEW	ALL DERIVATIVES	0.1	USED WITHINS	+

REMOVAL

1.

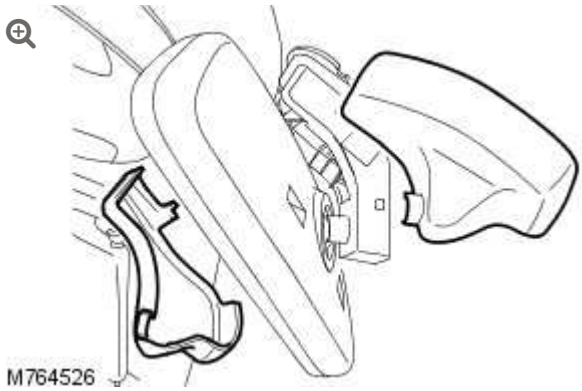

Remove the 2 trim panels from the interior rear view mirror.

- Carefully release the 2 trim panels.

2. Release the interior rear view mirror.
   - Reposition the interior rear view mirror.

3. 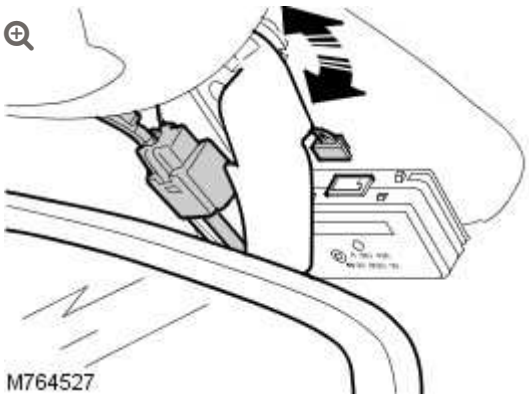

Remove the interior rear view mirror.

- Disconnect the 2 electrical connectors.
- Reposition the interior rear view mirror wiring harness from the interior rear view mirror.

INSTALLATION

1. Install the interior rear view mirror.
   - Reposition the interior rear view mirror wiring harness to the original position.
   - Connect the 2 electrical connectors.
2. Secure the interior rear view mirror.
   - Reposition the interior rear view mirror.
3. Install the trim panels to the interior rear view mirror.

REAR VIEW MIRRORS

DESCRIPTION AND OPERATION

COMPONENT LOCATION

NOTE:

right-hand drive (RHD) shown, left-hand drive (LHD) similar

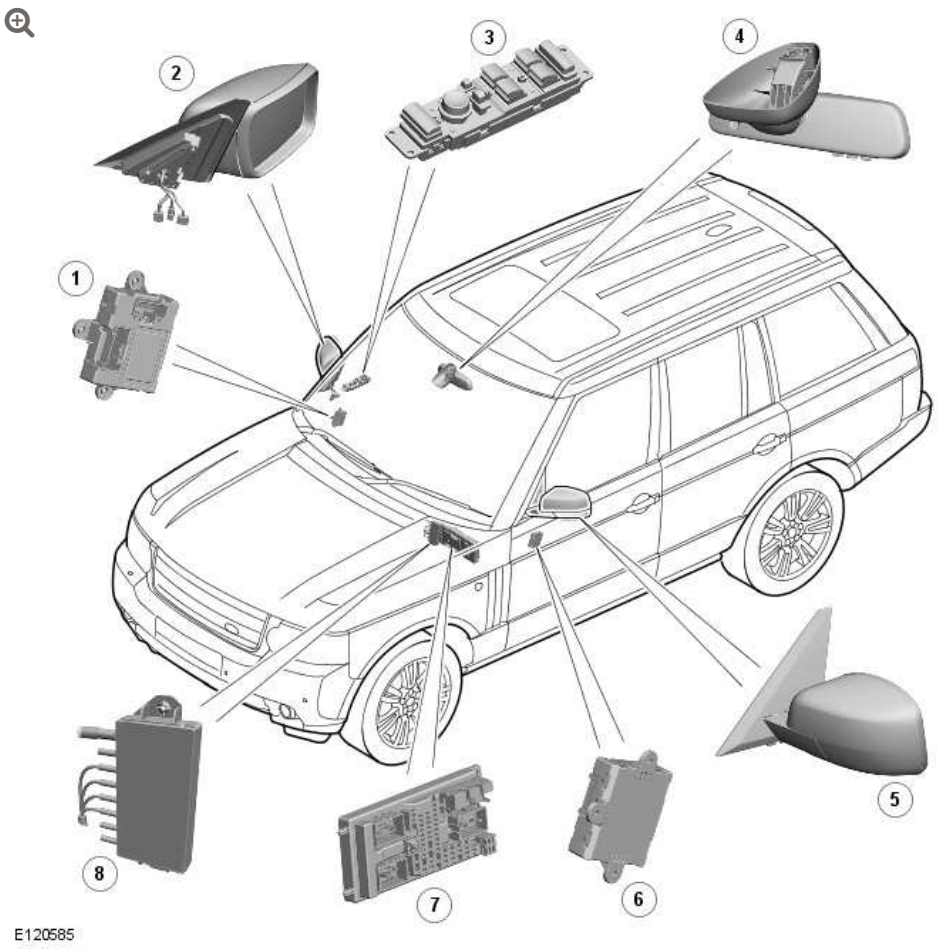

ITEM	DESCRIPTION
1	DDM (driver door module)
2	RH (right-hand) exterior mirror
3	Mirror switch
4	Interior mirror
5	LH (left-hand) exterior mirror
6	PDM (passenger door module)
7	CJB (central junction box)
8	BJB (battery junction box)

OVERVIEW

Rear view mirrors consist of an interior mirror on the windshield, an exterior mirror on each front door cheater.

INTERIOR MIRRORS

Automatic Dimming Interior Mirror (All Except Japan)

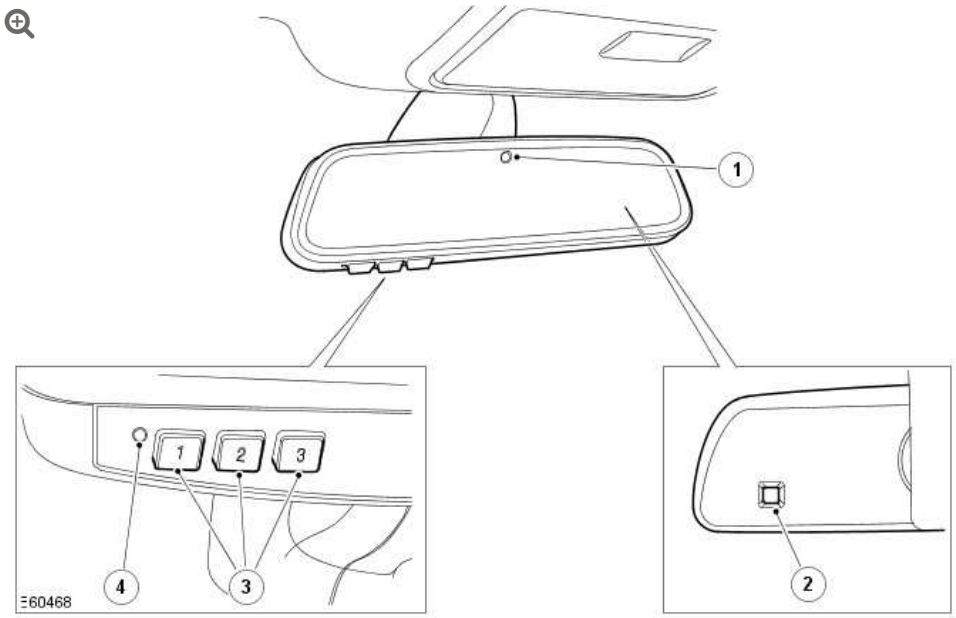

ITEM	DESCRIPTION
1	Rear light sensor
2	Front light sensor
3	Universal transmitter channel button (market dependant)
4	Universal transmitter light emitting diode (LED) (market dependant)

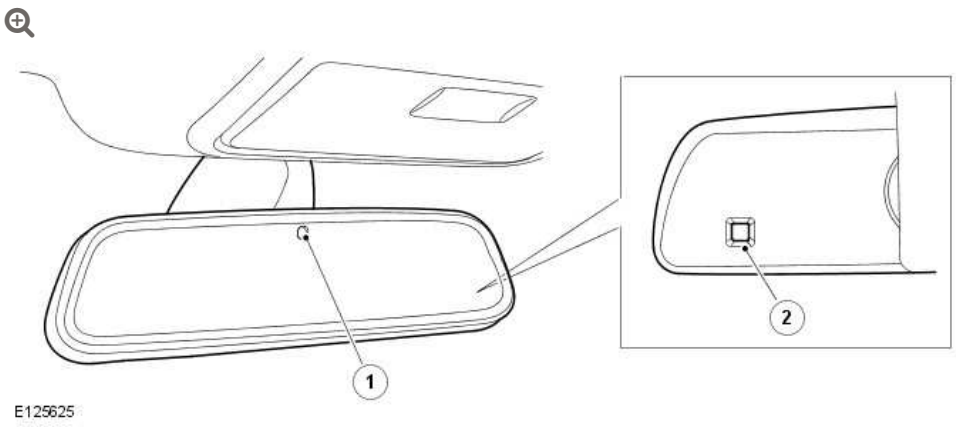

ITEM	DESCRIPTION
1	Rear light sensor
2	Front light sensor

The interior rear view mirror is provided as a electrically operated automatic dimming type.

The automatic dimming mirror comprises an electro-chromatic glass housed within a surrounding case that is attached with a ball joint connector to the mirror stem.

Light sensors are mounted on the front and rear of the mirror surround case. The sensors control the automatic dimming feature to reduce glare from the headlights of following vehicles.

The automatic dimming function is permanently active when the ignition is in power mode 4 (Accessory) and power mode 6 (Ignition). The forward facing light sensor monitors the ambient light level at the front of the vehicle; the rearward facing light sensor monitors the light level coming from the rear of the vehicle. When light from the rear of the vehicle exceeds the ambient light level from the front of the vehicle, the automatic dimming circuit darkens the interior mirror surface.

Automatic dimming is inhibited when reverse gear is selected to provide the driver with maximum vision. On vehicles with automatic

transmission, the reverse gear signal is provided by the TCM (transmission control module) via the high speed CAN bus to the CJB. The CJB then provides a power feed to the mirror. On vehicles with manual transmission, the reverse gear signal is provided by a transmission switch that is hardwired to the CJB.

Automatic dimming interior mirrors are connected to the vehicle wiring by an electrical connector in the mounting stem. The electrochromic mirror circuits and, where fitted, the universal transmitter, are powered by a feed from the central junction box (CJB) when the ignition is in power mode 6.

UNIVERSAL TRANSMITTER

WARNING:

The universal transmitter must not be used with any garage door that lacks safety 'stop' and 'reverse' features, as required by federal safety standards (this includes any garage or door opener model manufactured before April 1 1982). A garage door opener which cannot 'detect' an object in the path of a closing door and then automatically 'stop' and 'reverse' the door, does not meet current federal safety standards. Using a garage door opener without these features increases the risk of serious injury or death.

NOTES:

- Universal transmitter is market dependant
- HomeLink is a registered trademark owned by Johnson Controls Inc.

The universal transmitter can operate up to 3 home or office remotely operated systems (e.g. garage door/gate openers, lighting

and security systems), replacing the individual hand held transmitters required for each system. The universal transmitter can learn the radio frequency codes of most current transmitters.

NOTE:

Universal transmitter frequencies vary across markets

The universal transmitter incorporates 3 buttons, one for each channel, and an amber LED installed on the underside of the interior mirror. When one of the buttons is pressed the universal transmitter outputs the radio signal programmed for the related channel (if any) and illuminates the LED to confirm transmission.

For information on programming the universal transmitter, refer to the 'Owners Handbook'.

HIGH BEAM ASSIST

The high beam assist system is controlled by a high beam assist control module which is located in the interior rear view mirror body. The module and the CJB are connected via the medium speed CAN bus.

The high beam assist control module receives a power supply from the CJB when the ignition is in power mode 6 (ignition on). The rear view mirror also includes a low resolution camera (image) sensor which detects headlamps and tail lamps of preceding vehicles. The sensor is connected to the control module which evaluates the image data, checking for light intensity and location.

If conditions are correct and auto high beam assist has been activated, the control module will activate the high beam assist by sending a high or low beam request message to the CJB via the medium speed CAN bus. The CJB then controls the shutter in the Xenon projector module together with the high beam fill-in lamp.

For additional information, refer to: Exterior Lighting (417-01, Description and Operation).

EXTERIOR MIRRORS

Hi Line Mirror

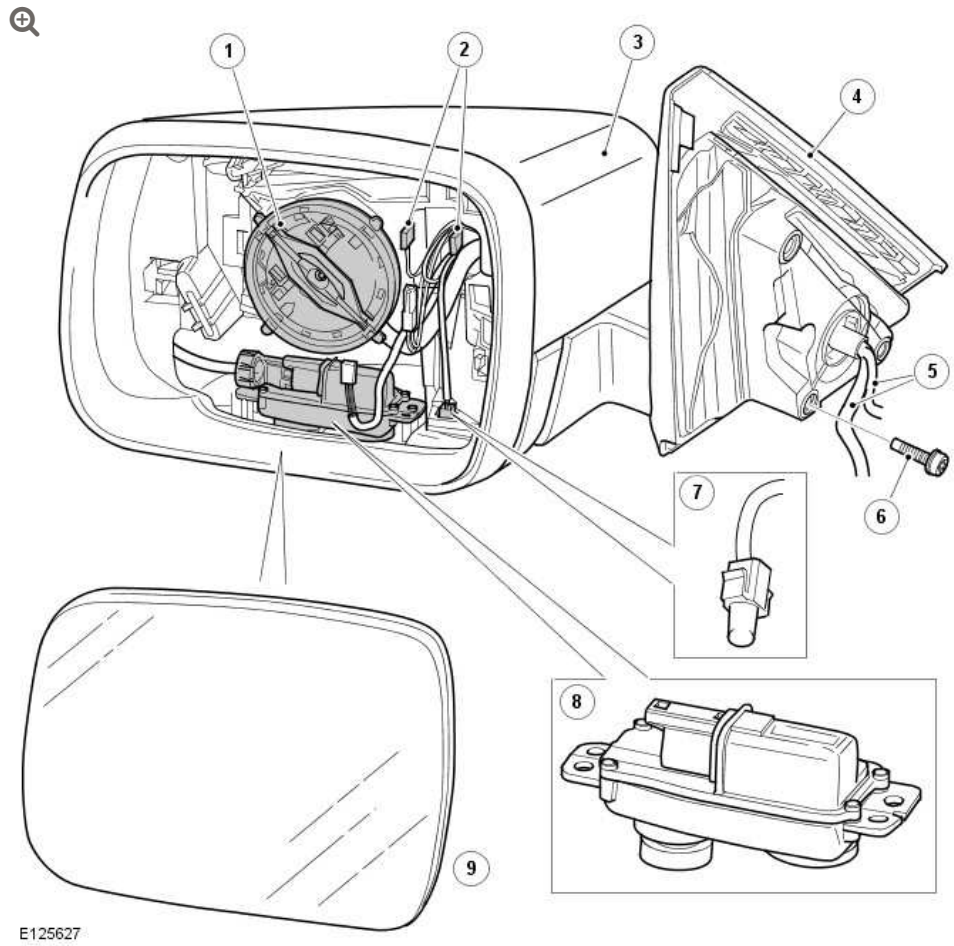

ITEM	DESCRIPTION
1	Vertical and horizontal adjustment motor
2	Heating element connectors
3	Mirror body
4	Base frame
5	Fly leads (connected to door module))
6	Screw (3 off)

ITEM	DESCRIPTION
7	Ambient air temperature sensor (LH mirror only)
8	Proximity camera/approach lamp
9	Mirror glass

Low Line Mirror

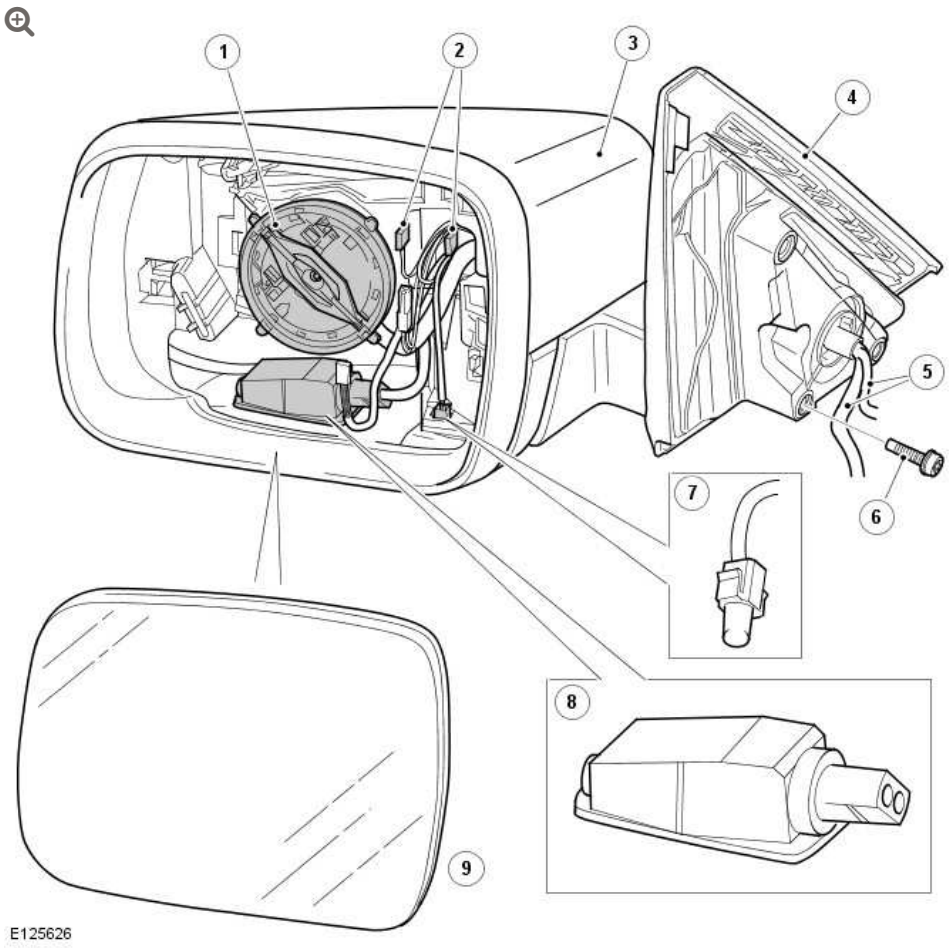

ITEM	DESCRIPTION
1	Vertical and horizontal adjustment motor
2	Heating element connectors
3	Mirror body
4	Base frame
5	Fly leads (connected to door module))
6	Screw (3 off)

ITEM	DESCRIPTION
7	Ambient air temperature sensor (LH mirror only)
8	Approach lamp
9	Mirror glass

The exterior mirrors are bolted to the front door structure and incorporate the following features:

- Convex mirror glass.
- Electric adjustment.
- Mirror heating.
- Automatic dimming (model and market dependant).
- Memory recall and reverse dipping (model and market dependant).
- Mirror fold back function (model and market dependant).
- Approach lighting (model dependant).
  For additional information, refer to: Interior Lighting (417-02, Description and Operation).
- Proximity cameras (model dependant).
- Ambient air temperature sensor (LHmirror only)

Operation of the exterior mirrors is controlled by the 2 front door modules and the CJB. The door modules and the CJB communicate with each other. The door modules interpret the signals and control switch inputs into appropriate outputs for the exterior mirrors. For operation of the various exterior mirror functions the 2 door modules are powered by a permanent battery feed from the CJB.

HEATING

Heating of the exterior mirrors is controlled by the CJB and the respective door modules, and is active while the ignition is in power mode 6 or 7.

The CJB receives the ambient air temperature value from the instrument cluster via the CAN (controller area network) bus. The CJB converts the ambient air temperature value to an on-time percentage and transmits it on the medium speed CAN bus to the two door modules, which then energize the exterior mirror heating elements accordingly. The on-time percentage is increased while the windshield wipers are on.

Exterior Mirror Heating Times

Ambient Air Temperature in °C (°F)	< -10 (<14)	-10 to 0 (14 to 32)	0 to 15 (32 to 59)	15 to 25 (59 to 77)	25 to 35 (77 to 95)	> 35 (>95)
On-time Percentage	100%	75%	50%	25%	0%	0%
On-time Percentage With Wipers On	100%	100%	75%	50%	25%	0%

On vehicles with the parked heating function, exterior mirror heating may also operate when the parked heating function is active, depending on the ambient air temperature.
For additional information, refer to: Auxiliary Heater (412-02B, Description and Operation).

DIMMING

Exterior mirrors with automatic dimming are slaved to the interior mirror. The interior mirror determines the amount of dimming required and energizes the electrochromic elements in the exterior mirrors accordingly. Feed and ground wires from the interior mirror, for the electrochromic elements in the exterior mirrors, bypass the door modules and connect directly to the exterior mirrors.

MIRROR MEMORY

The seat, exterior mirrors and steering column memory functions are integrated into the CJB.

The driver and front passenger door modules control the mirror memory while the driver seat module controls the seat and the CJB controls the steering column memory.

Located on the outboard side of the driver seat plinth, the memory switch and memory pre-set buttons can be used to store 3 different mirror positions. When a position is stored or recalled, the information is transmitted to the CJB via the medium speed CAN. It is then relayed to the door modules. Each door module evaluates the recalling and storage commands transmitted via the medium speedCAN for positions 1 to 3 and performs the necessary adjustments.

If a manual adjustment is selected while the mirror memory is operating, it will over-ride the memory recall function.

For mirror memory to operate, the mirror adjustment potentiometers must deliver a voltage value in the range of 80mV - 4.8V. Should a voltage applied be outside of this range the mirror will not operate when memory is selected.

REVERSE DIPPING

If the customer has activated reverse dipping when reverse gear is selected and the vehicle is in power mode 6 or 7, the driver and passenger exterior mirrors dip to provide a better view of the kerb. The mirrors return to their original position immediately upon reverse gear being disengaged.

The kerb view mirror position can be adjusted using the mirror adjustment multi-directional switch while reverse gear is selected and the vehicle in power mode 6 or 7.

BLIND SPOT MONITORING

NOTE:

Some variation in the illustrations may occur, but the essential information is always correct.

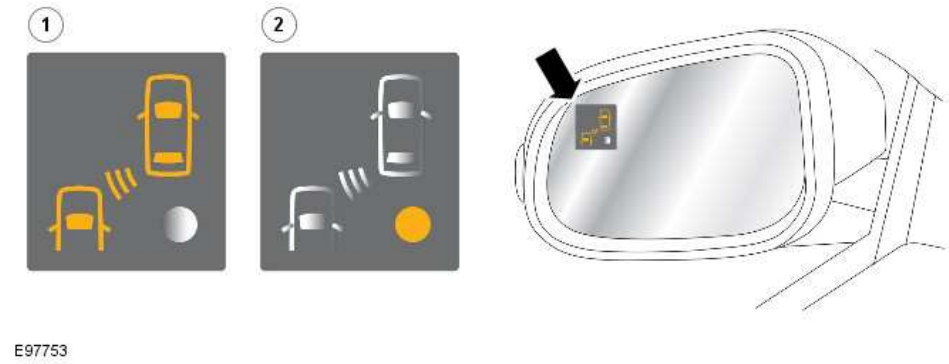

ITEM	DESCRIPTION
1	Warning alert icon
2	System status warning indicator

Blind spot monitoring function alerts the driver to a vehicle located in the vehicle blind spot. A warning indicator is located in each exterior mirror towards the outer edge.
For additional information, refer to: Blind Spot Monitoring System (413-09A, Description and Operation).

CONTROL DIAGRAM

NOTE:

RHD shown, LHD similar

A = Hardwired; **N** = Medium Speed CAN; **O** = LIN Bus

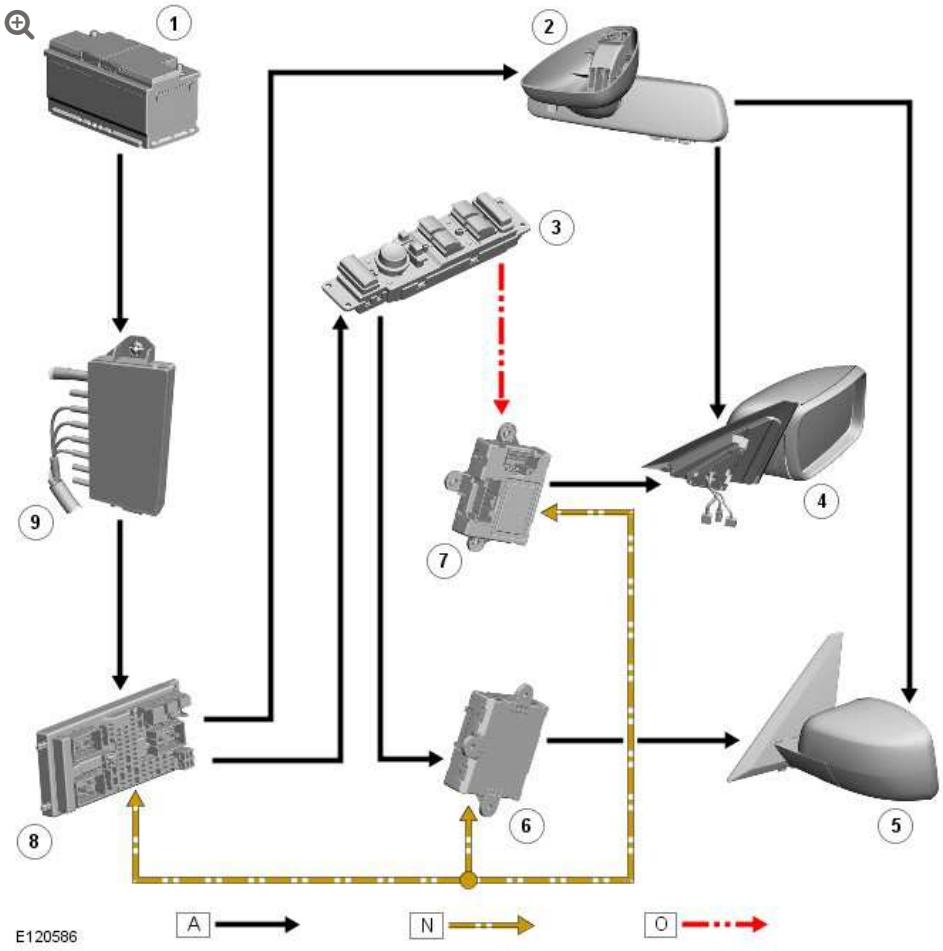

ITEM	DESCRIPTION
1	Battery
2	Interior mirror
3	Exterior mirror switch
4	RH exterior mirror
5	LH exterior mirror
6	DDM
7	PDM
8	CJBDriver exterior mirror
9	BJB

PRINCIPLES OF OPERATION

ELECTROCHROMIC MIRROR

The electrochromic mirrors automatically dim to reduce glare from the headlights of following vehicles in dark or low light conditions. In addition to dimming the interior mirror, the electrochromic mirror circuits also control the dimming of the two exterior mirrors, via power feed and ground connections with the 2 exterior mirrors.

A light sensor on the front of the interior mirror monitors ambient light at the front of the vehicle and a light sensor in the interior mirror glass monitors the light coming from behind the vehicle. When the light from behind the vehicle exceeds the ambient light level, the electrochromic circuits simultaneously dim the interior and exterior mirrors. Dimming is inhibited when reverse gear is selected. The interior mirror is provided with a reverse gear signal by the lighting control module (LCM).

REAR VIEW MIRRORS

SPECIFICATIONS

Torque Specifications

DESCRIPTION	NM	LB-FT
Exterior mirror Torx screws	8	6

CLIMATE CONTROLLED SEAT SWITCH (G897380)

REMOVAL AND INSTALLATION

REMOVAL

1. Remove the climate control assembly.
   For additional information, refer to: Climate Control Assembly (412-04, Removal and Installation).

2. 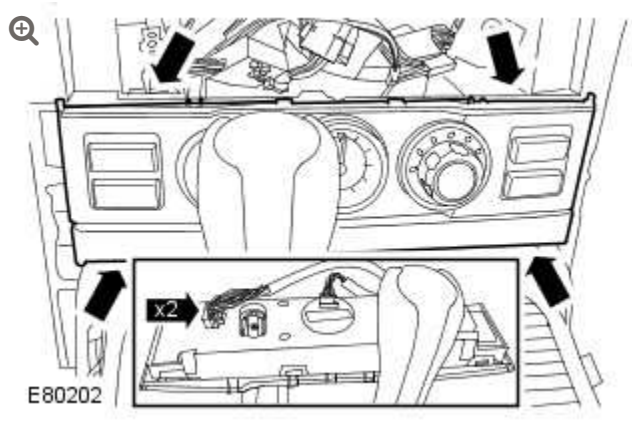

   Remove the heated front seat switch.

   - Release the 4 clips.
   - Disconnect the 2 electrical connectors.

3. **NOTE:**

> Do not disassemble further if the component is removed for access only.

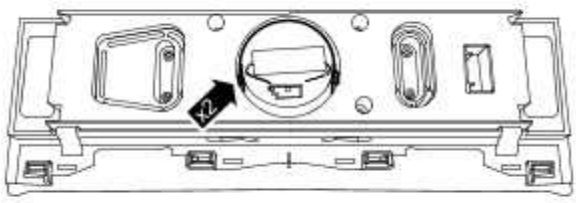

E77126

Remove the clock.

- Release the 2 clips.

INSTALLATION

1. Install the clock.
   - Secure the 2 clips.
2. Install the heated front seat switch.
   - Connect the 2 electrical connectors.
   - Secure the 4 clips.
3. Install the climate control assembly.
   For additional information, refer to: Climate Control Assembly (412-04, Removal and Installation).

CLIMATE CONTROLLED SEAT SWITCH (G897380)

REMOVAL AND INSTALLATION

REMOVAL

1. Remove the climate control assembly.
   For additional information, refer to: Climate Control Assembly (412-04, Removal and Installation).

2. 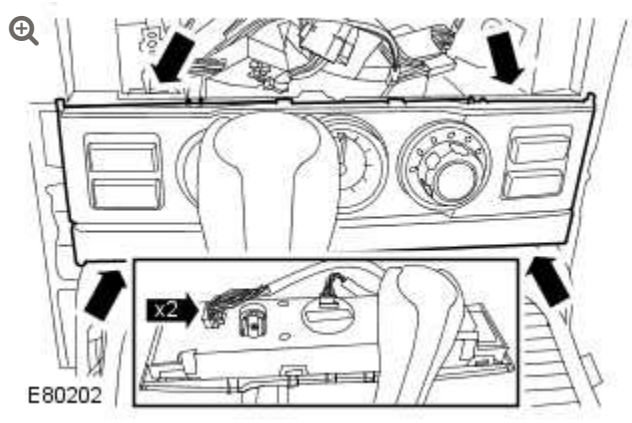

   Remove the heated front seat switch.

   - Release the 4 clips.
   - Disconnect the 2 electrical connectors.

3. **NOTE:**

> Do not disassemble further if the component is removed for access only.

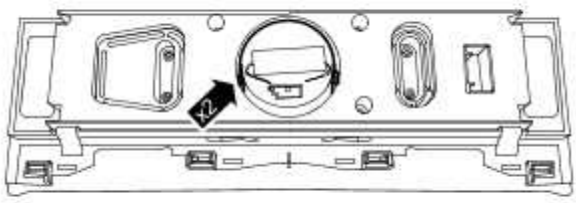

E77126

Remove the clock.

- Release the 2 clips.

INSTALLATION

1. Install the clock.
   - Secure the 2 clips.
2. Install the heated front seat switch.
   - Connect the 2 electrical connectors.
   - Secure the 4 clips.
3. Install the climate control assembly.
   For additional information, refer to: Climate Control Assembly (412-04, Removal and Installation).

SEATING

FRONT SEAT (G873655)

REMOVAL AND INSTALLATION

78.10.44.99	FRONT SEAT - REMOVE FOR ACCESS AND REFIT	ALL DERIVATIVES	0.3	USED WITHINS	+

REMOVAL

WARNINGS:

- Persons working on the supplemental restraint system (SRS) must be fully trained and have been issued with the safety guidelines.
- Allow a period of 10 minutes to elapse after disconnecting the battery before undertaking any work on the SRS.
- The SRS electrical connectors are unique. DO NOT force, or attempt to connect electrical connectors to the wrong sockets.
- The correct procedures must always be used when working on SRS components.
- It is imperative that before any work is undertaken on the SRS system, the appropriate information is read thoroughly.
- Always disconnect both battery cables before beginning work on the SRS system. Disconnect the ground cable first. Never reverse connect the battery.
- Take extra care when handling SRS components.

1. Position the front seat fully forwards.

2. **NOTES:**

   - Release the front safety belt lower anchor bolt cover clip upwards and away from the front seat base side trim panel.
   - Raise the seat base for access.

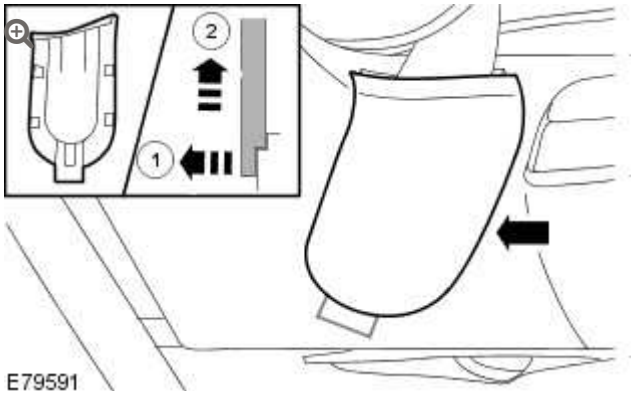

Remove the safety belt lower anchor bolt cover.

1. Carefully release the clip from behind the front seat base side trim panel.
2. Remove the cover.

---

3. **NOTE:**

Lower the seat base for access.

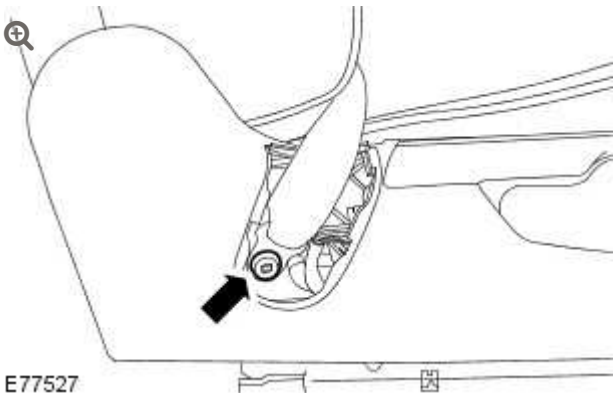

Release the safety belt lower anchor from the front seat.

- Remove and discard the bolt.

---

4. **NOTE:**

Right-hand shown, left-hand similar.

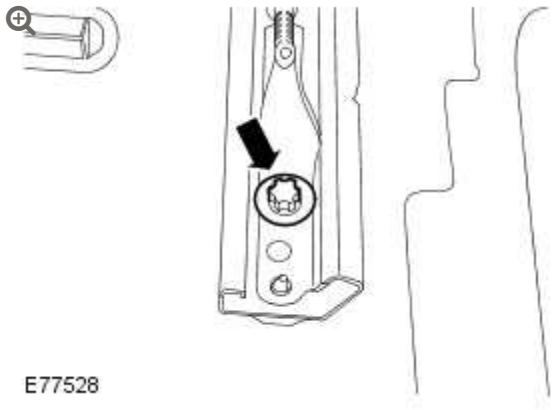

Remove the 2 rear bolts from the front seat.

5. **NOTE:**

Right-hand shown, left-hand similar.

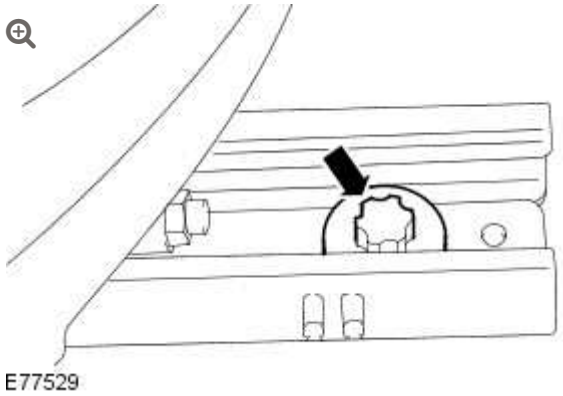

Remove the 2 front bolts from the front seat.

- Position the front seat fully rearwards.

6. Reposition the front seat to the central position.
   - Reposition the front seat backrest to the fully upright position.
   - Lower the front seat head restraint to the fully lowered position.

7. Disconnect the battery ground cable.
   For additional information, refer to: Specifications (414-00 Charging System - General Information, Specifications).

8. Make the air bag supplemental restraint system (SRS) safe.
   For additional information, refer to: Standard Workshop Practices (100-00 General Information, Description and Operation).

9. 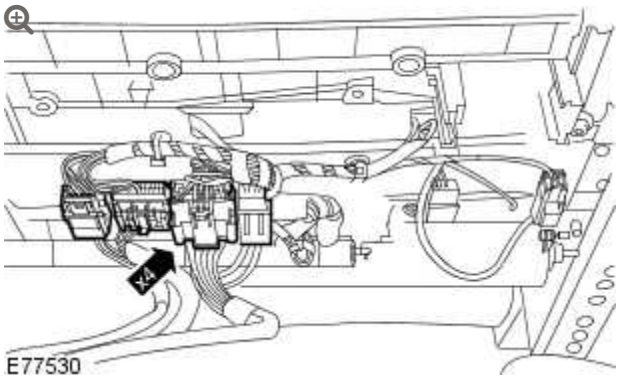

   Reposition the front seat for access.

   - Disconnect the 4 electrical connectors.

10. **NOTE:**

    Ultimate edition only.

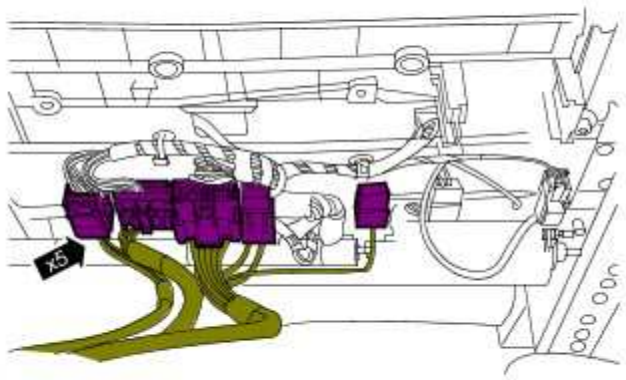

E137121

Reposition the RH front seat for access.

- Disconnect the 5 electrical connectors.

11. **NOTE:**

Make sure no damage is caused to the vehicle trim when removing the front seat.

With assistance carefully remove the front seat.

- Fit protection around the door aperture to protect the interior.

INSTALLATION

1. **NOTE:**

Make sure no damage is caused to the vehicle trim when installing the front seat.

With assistance carefully install the front seat.

- Remove the protection from around the door aperture.

2.

CAUTION:

Make sure the wiring harness is installed to its original position.

Reposition the front seat for access.

- Connect the 4 electrical connectors.

3.

CAUTION:

Make sure the wiring harness is installed to its original position.

NOTE:

Ultimate edition only.

Reposition the front seat for access.

- Connect the 5 electrical connectors.

4.

WARNING:

Make sure the front safety belt buckle wiring harness is correctly routed and secured in the position shown. Failure to follow this instruction may result in personal injury.

CAUTION:

Make sure the front safety belt buckle wiring harness is correctly routed and secured in the position shown. Failure to follow this instruction may result in damage to the vehicle.

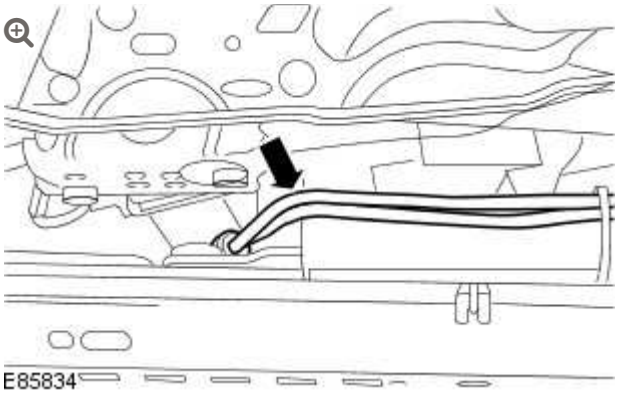

Reposition the front safety belt buckle wiring harness.

5. Connect the battery ground cable.
   For additional information, refer to: Specifications (414-00 Charging System - General Information, Specifications).

6. **NOTE:**

   Make sure the 3 seat rail covers are fitted to their original positions. Note: The inner front seat rail does not have a seat rail cover.

   Install the 2 front bolts to the front seat.

   - Align the front seat locating pegs.
   - Position the front seat fully rearwards.
   - Tighten the front seat front bolts to 45 Nm (33 lb.ft).

7. **NOTE:**

   Make sure the 3 seat rail covers are fitted to their original positions. Note: The inner front seat rail does not have a seat rail cover.

   Install the 2 rear bolts to the front seat.

   - Position the front seat fully forwards.
   - Tighten the front seat rear bolts to 45 Nm (33 lb.ft).

8. Attach the safety belt lower anchor to the seat.
   - Install a new bolt and tighten to 45 Nm (33 lb.ft).

9. Install the safety belt lower anchor bolt cover.

10. Reposition the front seat to the original position.

SEATING

FRONT SEAT BACKREST COVER (G874619)

REMOVAL AND INSTALLATION

78.90.06	COVER - SEAT BACK - FRONT SEAT - HEATING AND CLIMATE CONTROL - RENEW	ALL DERIVATIVES	1.7	USED WITHINS	+
78.90.08	COVER - BACKREST - FRONT SEAT - RENEW	ALL DERIVATIVES	1.6	USED WITHINS	+

REMOVAL

WARNINGS:

- Persons working on the supplemental restraint system (SRS) must be fully trained and have been issued with the safety guidelines.
- Allow a period of 10 minutes to elapse after disconnecting the battery before undertaking any work on the SRS.
- The SRS electrical connectors are unique. DO NOT force, or attempt to connect electrical connectors to the wrong sockets.
- The correct procedures must always be used when working on SRS components.
- It is imperative that before any work is undertaken on the SRS system, the appropriate information is read thoroughly.
- Always disconnect both battery cables before beginning work on the SRS system. Disconnect the ground cable first. Never reverse connect the battery.
- Take extra care when handling SRS components.

1. Disconnect the battery ground cable.
   For additional information, refer to: Specifications (414-00, Specifications).

2. Make the air bag supplemental restraint system (SRS) safe.
   For additional information, refer to: Standard Workshop Practices (100-00, Description and Operation).

3. Remove the front seat head restraint.
   For additional information, refer to: Front Seat Head Restraint - Vehicles With: Head Restraint Video Display (501-10, Removal and Installation).

4. Remove the seat armrest.
   For additional information, refer to: Seat Armrest (501-10, Removal and Installation).

5. 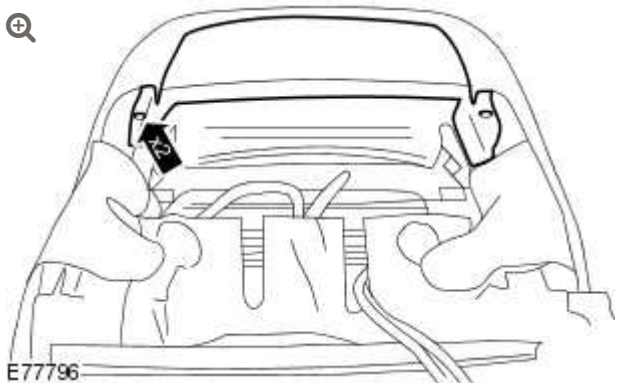

   Remove the front seat backrest cover upper trim panel.

   - Remove the 2 screws.
   - Release the front seat backrest cover from the front seat backrest upper trim panel.

6. 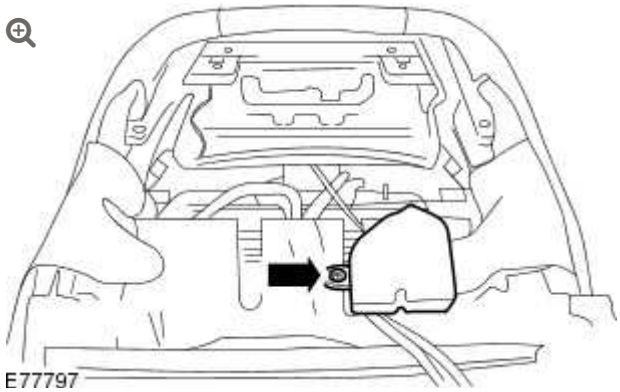

   Remove the front seat backrest cooling duct.

   - Remove the clip from the front seat backrest cooling duct.

7.

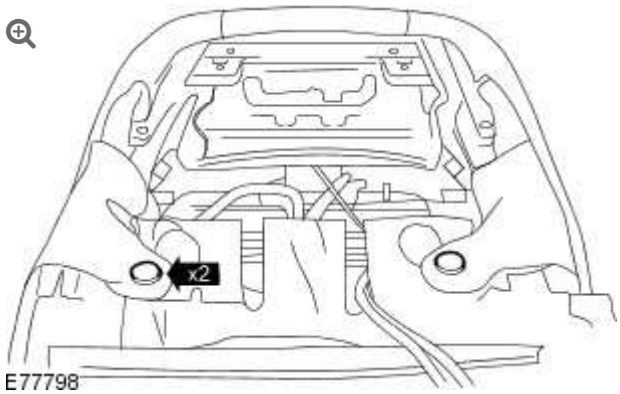

Remove and discard the 2 clips from the front seat backrest cover.

8.

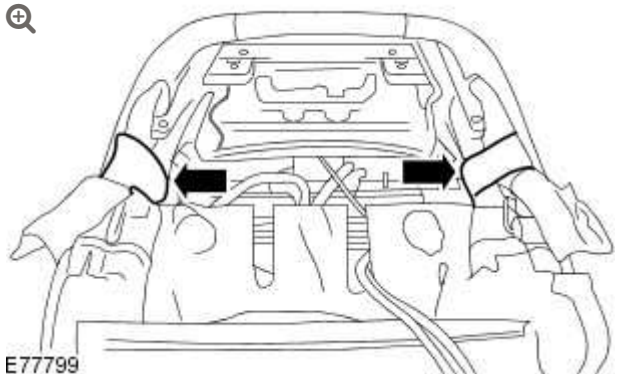

Release the 2 outer tension straps from the front seat backrest.

9.

WARNING:

The air bag is mounted directly under this component, extreme care is necessary. Failure to follow this instruction may result in personal injury.

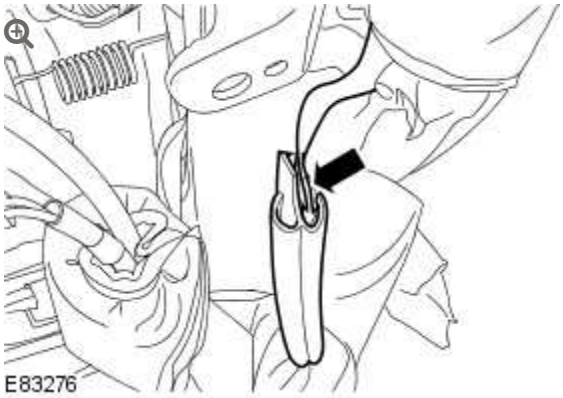

Release the front seat side air bag sleeve from the front seat backrest cover outer tension strap.

10.

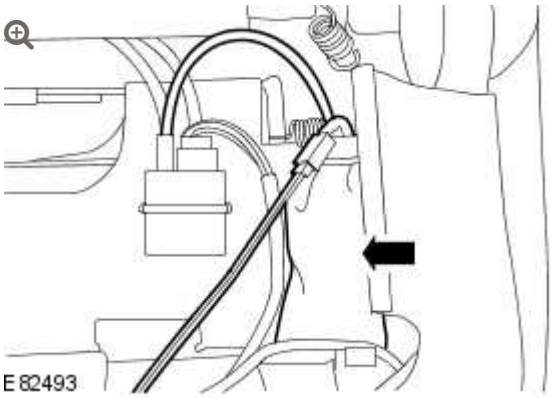

Reposition the lumbar motor control valve.

11.

WARNING:

The air bag is mounted directly under this component, extreme care is necessary. Failure to follow this instruction may result in personal injury.

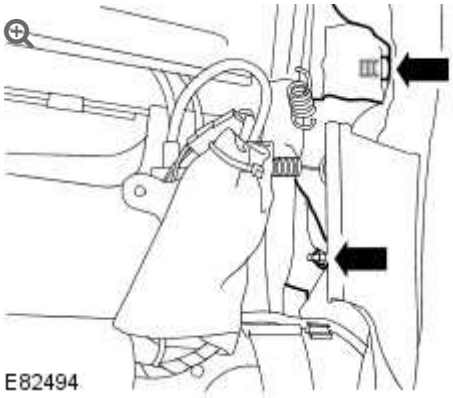

Release the front seat side air bag sleeve.

- Remove and discard the front seat side air bag sleeve bolt.
- Remove and discard the front seat side air bag lower nut.

12.

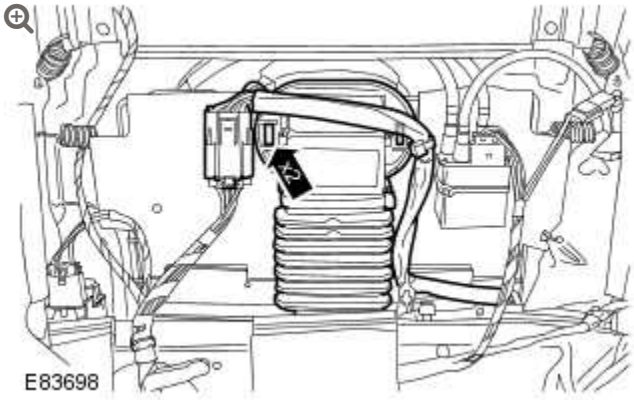

Reposition the front seat backrest heater and blower motor assembly.

- Carefully release the 2 clips.

13.

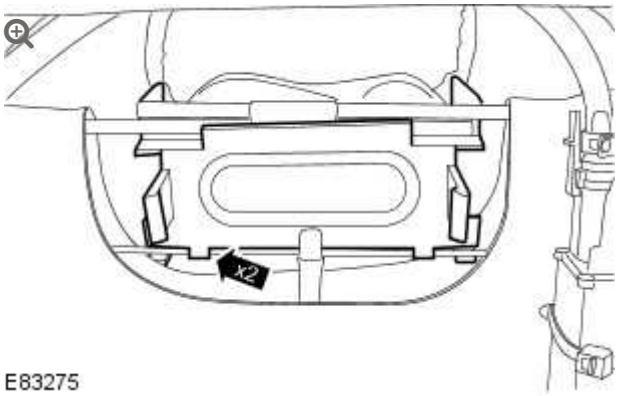

Reposition the front seat backrest heater and blower motor assembly duct.

- Release the 2 clips.

14.

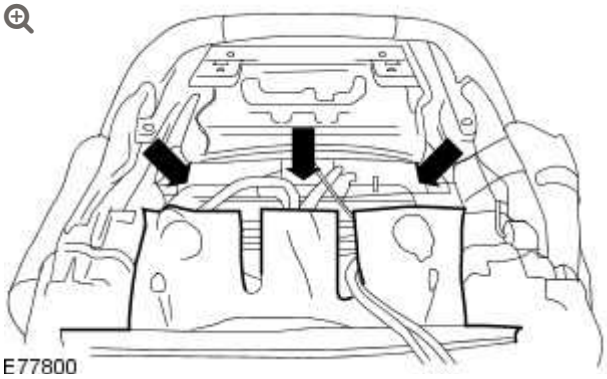

Release the 3 inner central tension straps from the front seat backrest.

- Reposition the front seat backrest cover inner central tension straps to the front.

15.

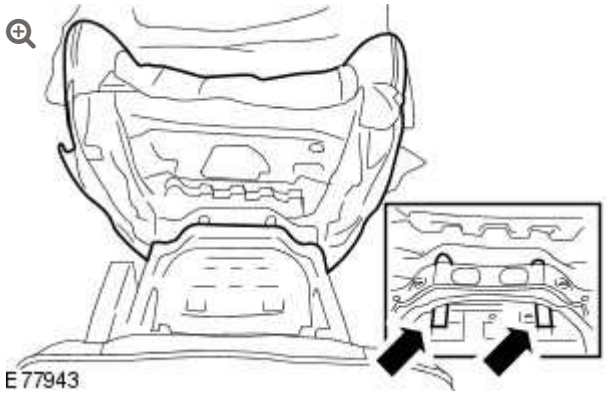

Remove the front seat head restraint guide tubes.

- Raise the front seat backrest cover from the front seat frame for access.
- Carefully release the 2 clips from the front seat head restraint guide tubes.

16. Remove the front seat backrest cushion and cover from the front seat frame.

17. **NOTE:**

Do not disassemble further if the component is removed for access only.

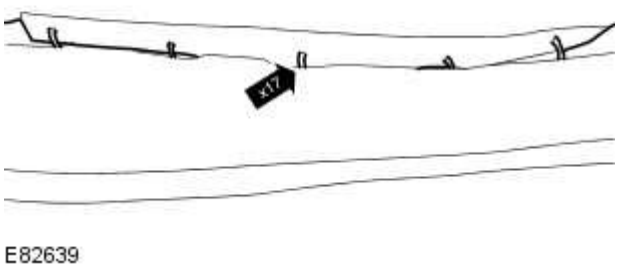

Remove the front seat backrest cover from the front seat backrest cushion.

- Reposition the front seat backrest cover from the front seat backrest cushion.
- Remove and discard the 17 clips from the front seat backrest cover.

INSTALLATION

1. Install the front seat backrest cover to the front seat backrest cushion.
   - Reposition the front seat backrest cover to the front seat backrest cushion.
   - Install the 17 new clips to the front seat backrest cover.
2. Install the front seat backrest cushion and cover to the front seat frame.
3. Install the front seat head restraint guide tubes.
   - Secure the head restraint guide tube clips.
   - Reposition the front seat backrest cover to the original position.
4. **WARNING:**

   Make sure the front seat air bag sleeve and front seat backrest cover outer tension straps, are secure and correctly installed to the front seat frame to allow the air bag to deploy correctly. Failure to follow this instruction may result in personal injury.

CAUTION:

Make sure the front seat air bag sleeve and front seat backrest cover outer tension straps, are secure and correctly installed to the front seat frame to allow the air bag to deploy correctly. Failure to follow this instruction may result in damage to the vehicle.

Secure the 3 inner central tension straps to the front seat backrest.

- Reposition the front seat backrest cover inner central tension straps to the rear.

5. Reposition the front seat backrest heater and blower motor assembly duct.
   - Secure the 2 clips.

6. Reposition the front seat backrest heater and blower motor assembly.
   - Secure the 2 clips.

7. **WARNINGS:**

   - Make sure the front seat air bag sleeve and front seat backrest cover outer tension straps, are secure and correctly installed to the front seat frame to allow the air bag to deploy correctly. Failure to follow this instruction may result in personal injury.
   - The air bag is mounted directly under this component, extreme care is necessary. Failure to follow this instruction may result in personal injury.

CAUTION:

Make sure the front seat air bag sleeve and front seat backrest cover outer tension straps, are secure and correctly installed to the front seat frame to allow the air bag to deploy correctly. Failure to follow this instruction may result in damage to the vehicle.

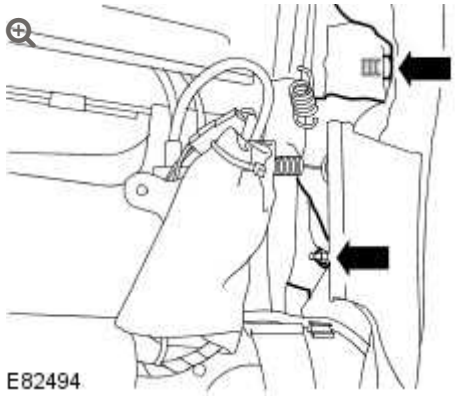

Secure the front seat side air bag sleeve.

- Tighten the new bolt to 3 Nm (2 lb.ft).
- Tighten the new nut to 7 Nm (5 lb.ft).

8. Reposition the lumbar motor control valve.

9.

WARNINGS:

- Make sure the front seat air bag sleeve and front seat backrest cover outer tension straps, are secure and correctly installed to the front seat frame to allow the air bag to deploy correctly. Failure to follow this instruction may result in personal injury.
- The air bag is mounted directly under this component, extreme care is necessary. Failure to follow this instruction may result in personal injury.

CAUTION:

Make sure the front seat air bag sleeve and front seat backrest cover outer tension straps, are secure and correctly installed to the front seat frame to allow the air bag to deploy correctly. Failure to follow this instruction may result in damage to the vehicle.

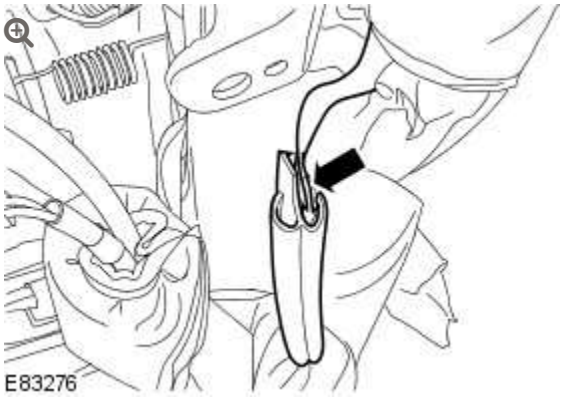

Secure the front seat side air bag sleeve to the front seat backrest cover outer tension strap.

WARNING:

Make sure the front seat air bag sleeve and front seat backrest cover outer tension straps, are secure and correctly installed to the front seat frame to allow the air bag to deploy correctly. Failure to follow this instruction may result in personal injury.

CAUTION:

Make sure the front seat air bag sleeve and front seat backrest cover outer tension straps, are secure and correctly installed to the front seat frame to allow the air bag to deploy correctly. Failure to follow this instruction may result in damage to the vehicle.

Secure the 2 outer tension straps to the front seat backrest.

11. Install the 2 new clips to the front seat backrest cover.

12. Install the front seat backrest cooling duct.
    - Install the clip to the front seat backrest cooling duct.

13. Install the front seat backrest cover upper trim panel.
    - Install the front seat backrest cover to the front seat backrest upper trim panel.
    - Install the 2 screws.

14. Install the seat armrest.
    For additional information, refer to: Seat Armrest (501-10, Removal and Installation).

15. Install the front seat head restraint.
    For additional information, refer to: Front Seat Head Restraint - Vehicles With: Head Restraint Video Display (501-10, Removal and Installation).

16. Connect the battery ground cable.
    For additional information, refer to: Specifications (414-00, Specifications).

SEATING

FRONT SEAT BACKREST HEATER AND BLOWER ASSEMBLY (G916499)

REMOVAL AND INSTALLATION

REMOVAL

WARNINGS:

- Persons working on the supplemental restraint system (SRS) must be fully trained and have been issued with the safety guidelines.
- Allow a period of 10 minutes to elapse after disconnecting the battery before undertaking any work on the SRS.
- The SRS electrical connectors are unique. DO NOT force, or attempt to connect electrical connectors to the wrong sockets.
- The correct procedures must always be used when working on SRS components.
- It is imperative that before any work is undertaken on the SRS system, the appropriate information is read thoroughly.
- Always disconnect both battery cables before beginning work on the SRS system. Disconnect the ground cable first. Never reverse connect the battery.
- Take extra care when handling SRS components.

1. Disconnect the battery ground cable.

2. Make the air bag supplemental restraint system (SRS) safe.
   For additional information, refer to: Standard Workshop Practices (100-00 General Information, Description and Operation).

3. Remove the front seat.
   For additional information, refer to: Front Seat (501-10 Seating, Removal and Installation).

4.

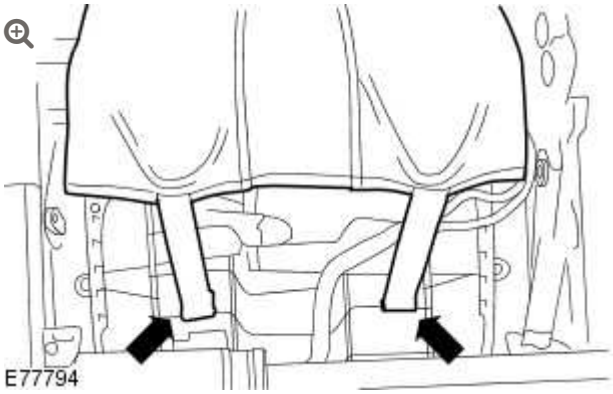

Release the 2 lower tension straps from the front seat base.

- Reposition the front seat backrest cover for access.

5.



Remove the front seat side trim panel support.

- Release the 2 clips.

6.

CAUTION:

Release the 2 front clips and the rear clip before releasing the 3 fir tree clips. Failure to follow this instruction may result in damage to the vehicle.

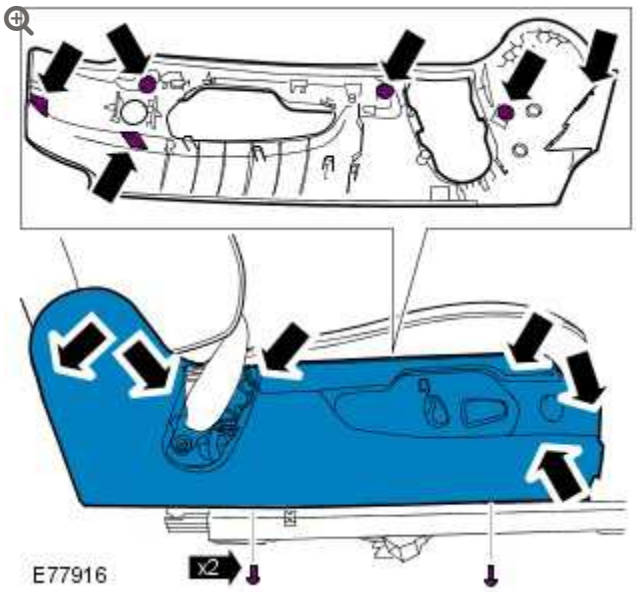

Carefully release the front seat base side trim panel.

- Remove the 2 screws.
- Release the 2 front clips.
- Release the rear clip.
- Release the 3 fir tree clips.

7.

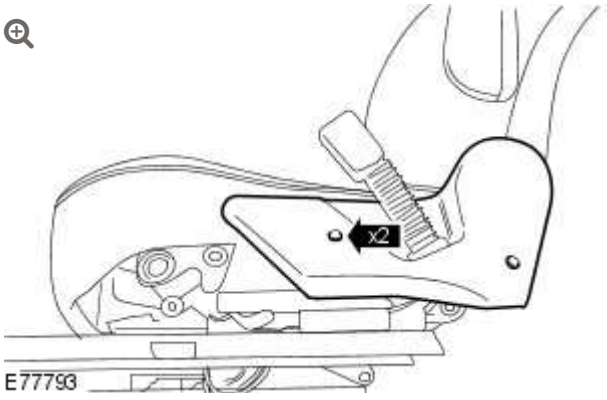

Remove the front seat backrest hinge cover.

- Remove the 2 screws.
- Release the clip.

8.

NOTE:

Left-hand shown, right-hand similar.

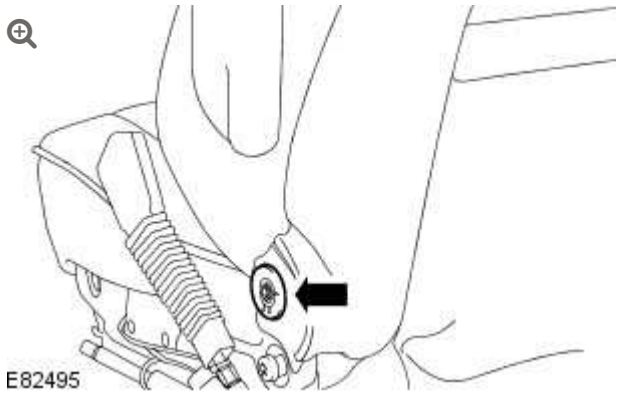

Remove the 2 clips from the front seat backrest lower rear cover.

9.

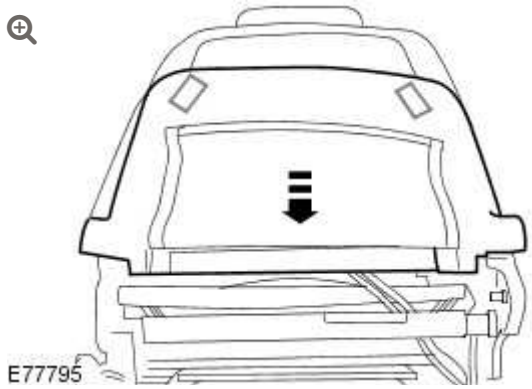

Remove the front seat backrest lower rear cover.

- Release the front seat backrest cover lower trim panel from the 2 clips.

10.

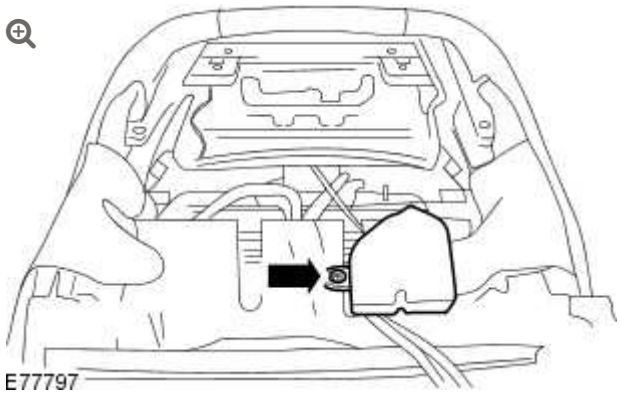

Remove the front seat backrest cooling duct.

- Remove the clip from the front seat backrest cooling duct.

11.

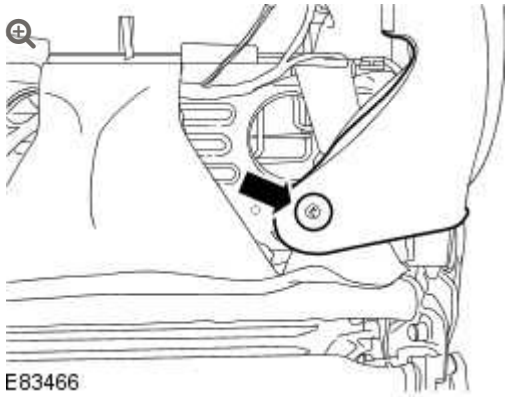

Remove and discard the clip from the front seat backrest cover.

12.

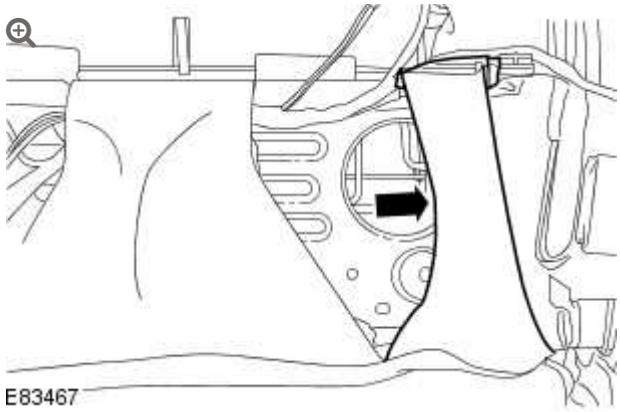

Release the front seat backrest cover RH inner tension strap.

13.

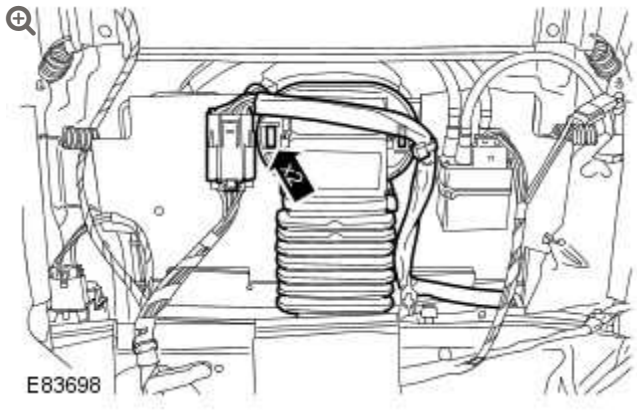

Reposition the front seat backrest heater and blower motor assembly.

- Carefully release the 2 clips.

14.

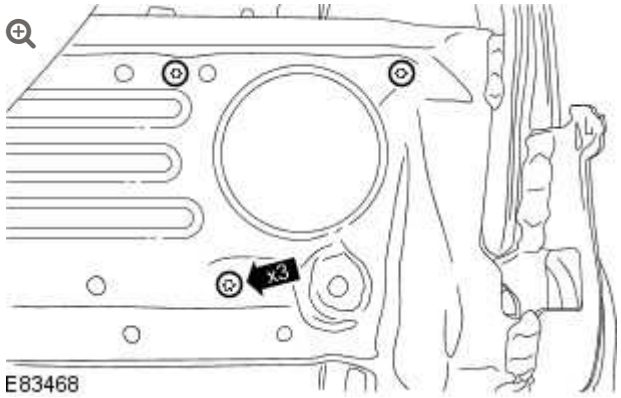

Remove the 3 screws from the front seat backrest heater and blower motor assembly.

15.

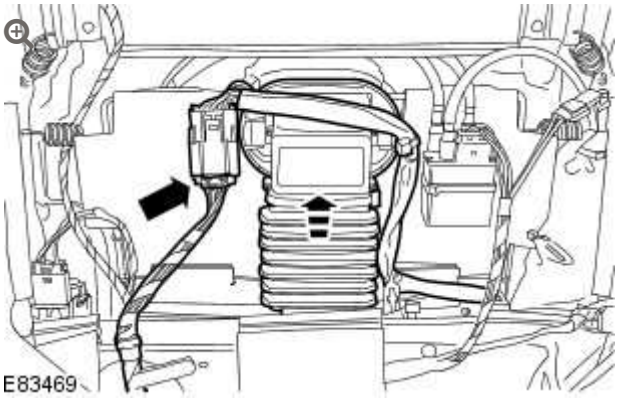

Remove the front seat backrest heater and blower motor assembly.

- Disconnect the front seat backrest heater and blower motor assembly electrical connector.

INSTALLATION

1. Install the front seat backrest heater and blower motor assembly.
   - Connect the front seat backrest heater and blower motor assembly electrical connector.
2. Install the 3 screws to the front seat backrest heater and blower motor assembly.
3. Reposition the front seat backrest heater and blower motor assembly.
   - Secure the 2 clips.
4. Secure the front seat backrest cover RH inner tension strap.
5. Install the new clip to the front seat backrest cover.
6. Install the front seat backrest cooling duct.

- Install the clip to the front seat backrest cooling duct.

7. Install the front seat backrest lower rear cover.
   - Secure the front seat backrest cover lower trim panel to the 2 clips.

8. Install the 2 clips to the front seat backrest lower rear cover.

9. Install the front seat backrest hinge cover.
   - Secure the clip.
   - Install the 2 screws.

10. Secure the front seat base side trim panel.
    - Secure the 6 clips.
    - Install the 2 screws.

11. Install the front seat side trim panel support.
    - Secure the 2 clips.

12. Secure the 2 lower tension straps to the front seat base.
    - Reposition the front seat backrest cover.

13. Install the front seat.
    For additional information, refer to: Front Seat (501-10 Seating, Removal and Installation).

14. Connect the battery ground cable.

SEATING

FRONT SEAT BACKREST LOWER REAR COVER (G899536)

REMOVAL AND INSTALLATION

REMOVAL

WARNINGS:

- Persons working on the supplemental restraint system (SRS) must be fully trained and have been issued with the safety guidelines.
- Allow a period of 10 minutes to elapse after disconnecting the battery before undertaking any work on the SRS.
- The SRS electrical connectors are unique. DO NOT force, or attempt to connect electrical connectors to the wrong sockets.
- The correct procedures must always be used when working on SRS components.
- It is imperative that before any work is undertaken on the SRS system, the appropriate information is read thoroughly.
- Always disconnect both battery cables before beginning work on the SRS system. Disconnect the ground cable first. Never reverse connect the battery.
- Take extra care when handling SRS components.

1. Disconnect the battery ground cable.
   For additional information, refer to: Specifications (414-00, Specifications).

2. Make the air bag supplemental restraint system (SRS) safe.
   For additional information, refer to: Standard Workshop Practices (100-00, Description and Operation).

3. Remove the front seat.
   For additional information, refer to: Front Seat (501-10, Removal and Installation).

4.

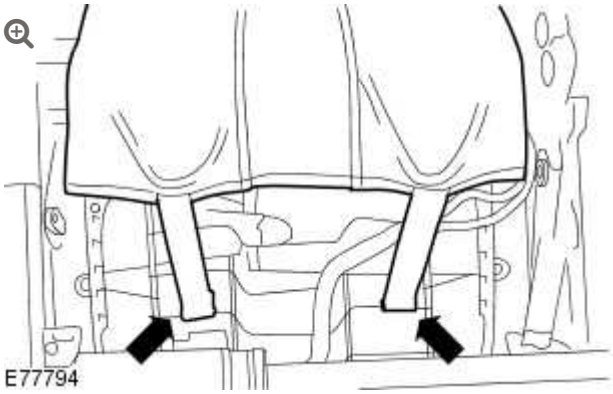

Release the 2 lower tension straps from the front seat base.

- Reposition the front seat backrest cover for access.

5.



Remove the front seat side trim panel support.

- Release the 2 clips.

6. Remove the seat control switch.
   For additional information, refer to: Seat Control Switch (501-10, Removal and Installation).

7.

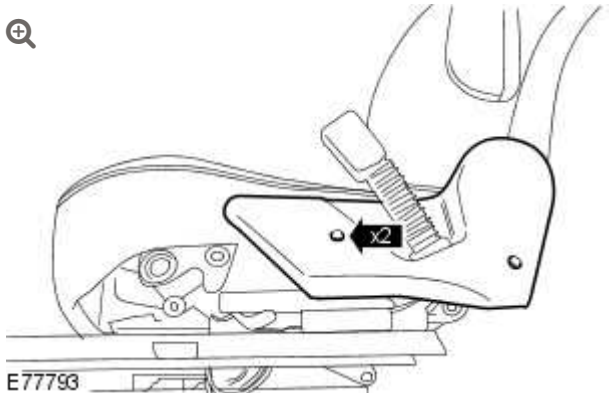

Remove the front seat backrest hinge cover.

- Remove the 2 screws.
- Release the clip.

8.

NOTE:

Left-hand shown, right-hand similar.

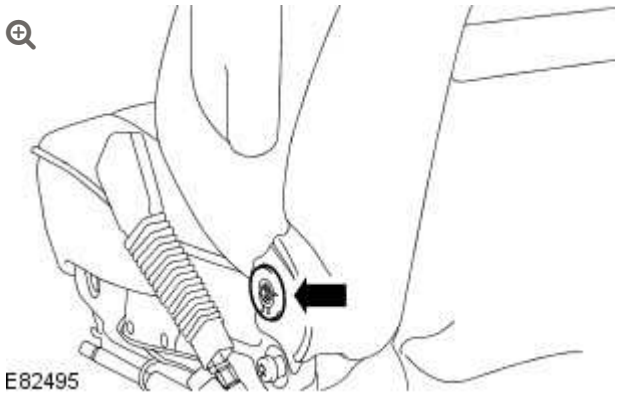

Remove the 2 clips from the front seat backrest lower rear cover.

9.

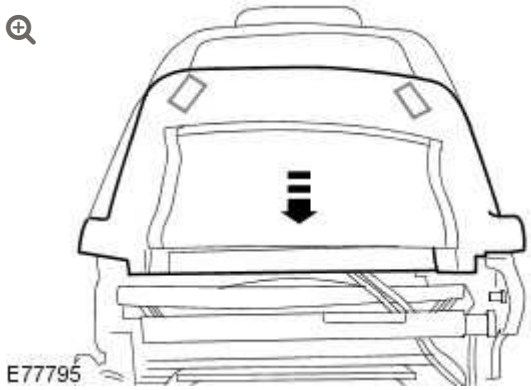

Remove the front seat backrest lower rear cover.

- Release the front seat backrest cover lower trim panel from the 2 clips.

INSTALLATION

1. Install the front seat backrest lower rear cover.
   - Secure the front seat backrest cover lower trim panel to the 2 clips.
2. Install the 2 clips to the front seat backrest lower rear cover.
3. Install the front seat backrest hinge cover.
   - Secure the clip.
   - Install the 2 screws.
4. Install the seat control switch.
   For additional information, refer to: Seat Control Switch (501-10, Removal and Installation).
5. Install the front seat side trim panel support.
   - Secure the 2 clips.
6. Secure the 2 lower tension straps to the front seat base.

- Reposition the front seat backrest cover.

7. Install the front seat.
   For additional information, refer to: Front Seat (501-10, Removal and Installation).

8. Connect the battery ground cable.
   For additional information, refer to: Specifications (414-00, Specifications).

SEATING

FRONT SEAT CUSHION COVER (G874698)

REMOVAL AND INSTALLATION

78.30.01	COVER - ONE PIECE - FRONT SEAT SEAT CUSHION - RENEW	ALL DERIVATIVES	1.3	USED WITHINS	+

REMOVAL

WARNINGS:

- Persons working on the supplemental restraint system (SRS) must be fully trained and have been issued with the safety guidelines.
- Allow a period of 10 minutes to elapse after disconnecting the battery before undertaking any work on the SRS.
- The SRS electrical connectors are unique. DO NOT force, or attempt to connect electrical connectors to the wrong sockets.
- The correct procedures must always be used when working on SRS components.
- It is imperative that before any work is undertaken on the SRS system, the appropriate information is read thoroughly.
- Always disconnect both battery cables before beginning work on the SRS system. Disconnect the ground cable first. Never reverse connect the battery.
- Take extra care when handling SRS components.

CAUTION:

The front passenger seat occupant classification sensor is available only as a service kit. No attempt should be made to replace individual components. Failure to follow this instruction may result in personal injury.

1. Disconnect the battery ground cable.
   For additional information, refer to: Specifications (414-00, Specifications).

2. Make the air bag supplemental restraint system (SRS) safe.
   For additional information, refer to: Standard Workshop Practices (100-00, Description and Operation).

3. Remove the front seat.
   For additional information, refer to: Front Seat (501-10, Removal and Installation).

4. 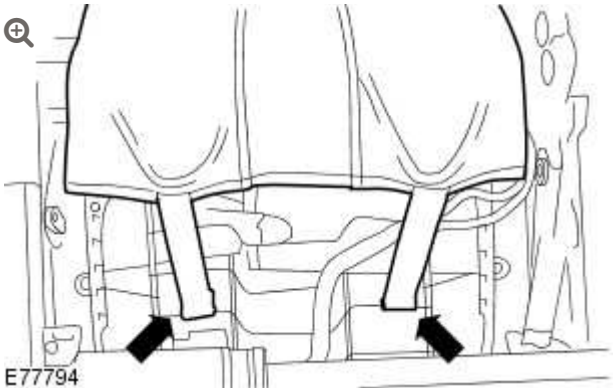

   Release the 2 lower tension straps from the front seat base.
   - Reposition the front seat backrest cover for access.

5. 

   Remove the front seat side trim panel support.
   - Release the 2 clips.

6. Remove the seat control switch.
   For additional information, refer to: Seat Control Switch (501-10, Removal and Installation).

7.

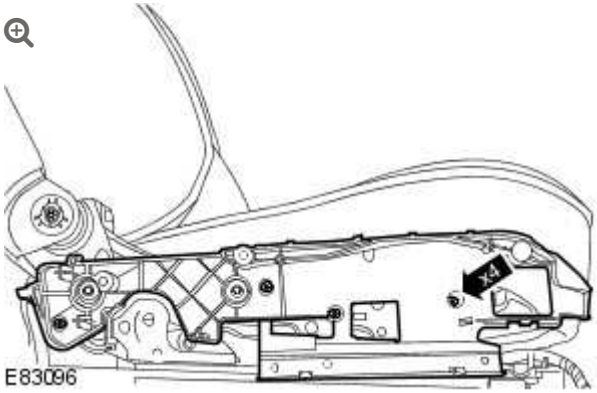

Remove the front seat base side trim panel mounting bracket.

- Release the 2 wiring harness clips.
- Remove the 4 screws.

8.

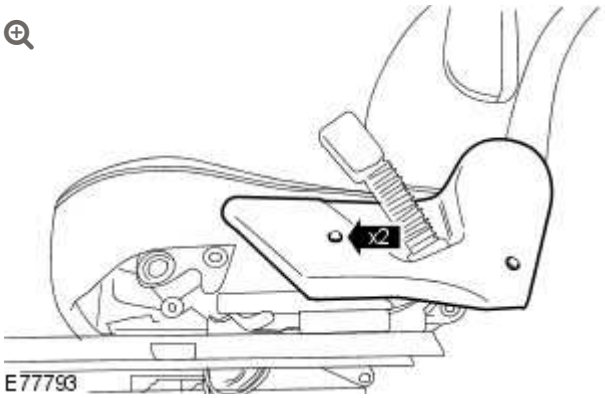

Remove the front seat backrest hinge cover.

- Remove the 2 screws.
- Release the clip.

9.

NOTE:

Left-hand shown, right-hand similar.

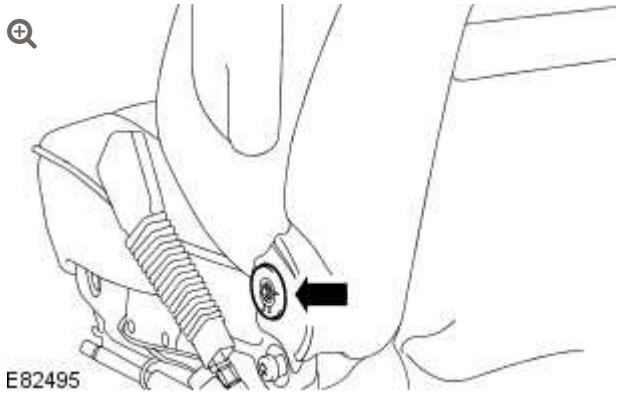

Remove the 2 clips from the front seat backrest cover lower trim panel.

10.

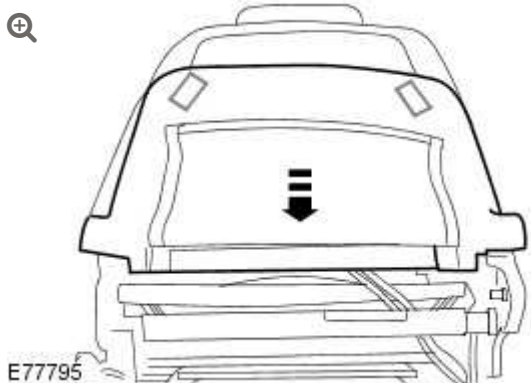

Remove the front seat backrest cover lower trim panel.

- Release the front seat backrest cover lower trim panel from the 2 clips.

11.

WARNING:

The front seat base has sharp edges, hand protection must be worn when releasing the front seat cushion cover from the front seat base. Failure to follow this instruction may result in personal injury.

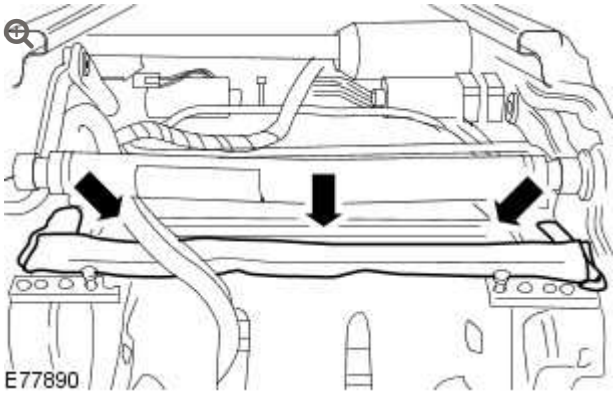

Release the front seat cushion cover from the rear of the front seat base.

12.

WARNING:

The front seat base has sharp edges, hand protection must be worn when releasing the front seat cushion cover from the front seat base. Failure to follow this instruction may result in personal injury.

NOTE:

Left-hand shown, right-hand similar.

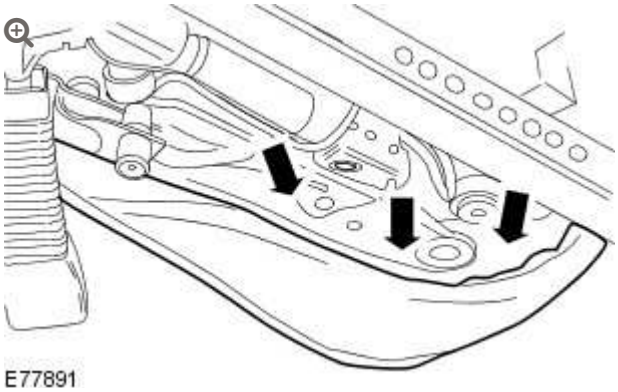

Release the front seat cushion cover from the left-hand side of the front seat base.

13.

WARNING:

The front seat base has sharp edges, hand protection must be worn when releasing the front seat cushion cover from the front seat base. Failure to follow this instruction may result in personal injury.

Release the front seat cushion cover from the right-hand side of the front seat base.

14.

WARNING:

The front seat base has sharp edges, hand protection must be worn when releasing the front seat cushion cover from the front seat base. Failure to follow this instruction may result in personal injury.

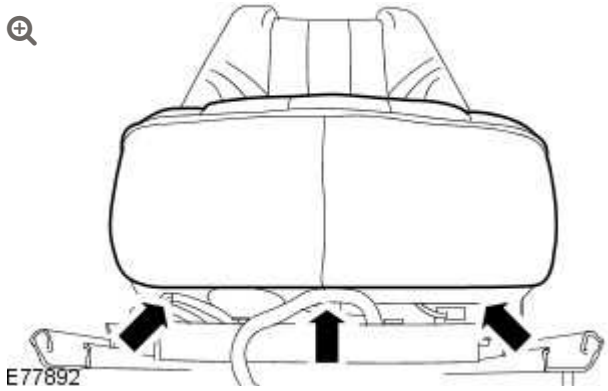

Remove the front seat cushion and front seat cushion cover from the front seat base.

- Reposition the front seat for access.
- Release the front seat cushion cover from the front of the front seat base.

15.

NOTE:

Do not disassemble further if the component is removed for access only.

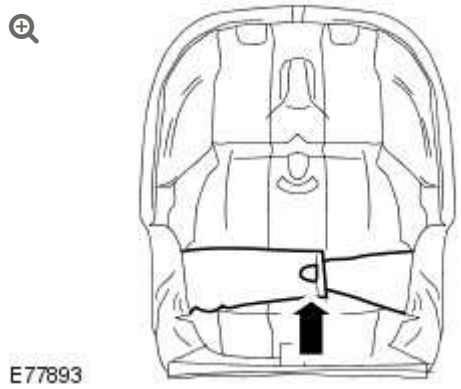

Release the front seat cushion cover tension strap.

16.

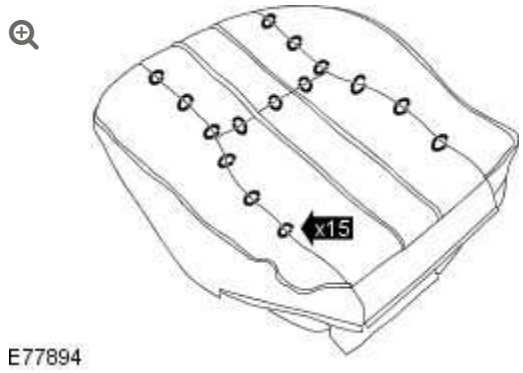

Remove and discard the 15 clips from the front seat cushion cover.

- Reposition the front seat cushion cover for access.

17.

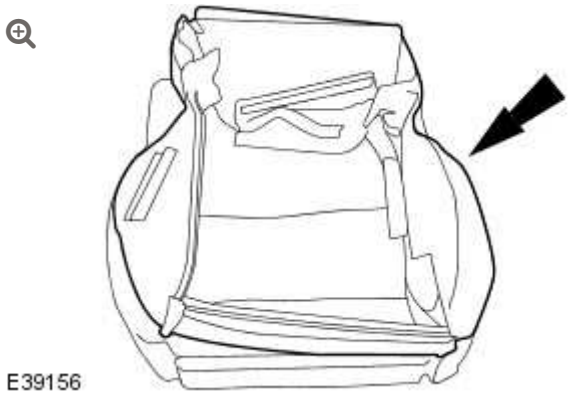

Remove the front seat cushion cover from the front seat cushion.

INSTALLATION

1. Install the front seat cushion cover to the front seat cushion.

2. Install the 15 new clips to the front seat cushion cover.
   - Reposition the front seat cushion cover to the front seat cushion.

3. Secure the front seat cushion cover tension strap.

4. **WARNING:**

   The front seat base has sharp edges, hand protection must be worn when securing the front seat cushion cover to front seat base. Failure to follow this instruction may result in personal injury.

   Install the front seat cushion and cover to the front seat base.
   - Reposition the front seat for access.

- Secure the front seat cushion cover to the front of the front seat base.

5.

WARNING:

The front seat base has sharp edges, hand protection must be worn when securing the front seat cushion cover to front seat base. Failure to follow this instruction may result in personal injury.

Secure the front seat cushion cover to the right-hand side of the front seat base.

6.

WARNING:

The front seat base has sharp edges, hand protection must be worn when securing the front seat cushion cover to front seat base. Failure to follow this instruction may result in personal injury.

Secure the front seat cushion cover to the left-hand side of the front seat base.

7.

WARNING:

The front seat base has sharp edges, hand protection must be worn when securing the front seat cushion cover to front seat base. Failure to follow this instruction may result in personal injury.

Secure the front seat cushion cover to the rear of the front seat base.

8. Install the front seat backrest cover lower trim panel.
   - Secure the front seat backrest cover lower trim panel to the 2 clips.

9. Install the 2 clips to the front seat backrest cover lower trim panel.

10. Install the front seat backrest hinge cover.
    - Secure the clip.
    - Install the 2 screws.

11. Install the front seat base side trim panel mounting bracket.
    - Install the 4 screws.
    - Secure the 2 wiring harness clips.

12. Install the seat control switch.
    For additional information, refer to: Seat Control Switch (501-10, Removal and Installation).

13. Install the front seat side trim panel support.
    - Secure the 2 clips.

14. Secure the 2 lower tension straps to the front seat base.
    - Reposition the front seat backrest cover.

15. Install the front seat.
    For additional information, refer to: Front Seat (501-10, Removal and Installation).

16. Connect the battery ground cable.
    For additional information, refer to: Specifications (414-00, Specifications).

17. Using the Land Rover approved diagnostic system, calibrate the occupant classification sensor.

SEATING

FRONT SEAT CUSHION HEATER AND BLOWER ASSEMBLY (G916500)

REMOVAL AND INSTALLATION

REMOVAL

WARNINGS:

- Persons working on the supplemental restraint system (SRS) must be fully trained and have been issued with the safety guidelines.
- Allow a period of 10 minutes to elapse after disconnecting the battery before undertaking any work on the SRS.
- The SRS electrical connectors are unique. DO NOT force, or attempt to connect electrical connectors to the wrong sockets.
- The correct procedures must always be used when working on SRS components.
- It is imperative that before any work is undertaken on the SRS system, the appropriate information is read thoroughly.
- Always disconnect both battery cables before beginning work on the SRS system. Disconnect the ground cable first. Never reverse connect the battery.
- Take extra care when handling SRS components.

1. Disconnect the battery ground cable.
   For additional information, refer to: Specifications (414-00, Specifications).

2. Make the air bag supplemental restraint system (SRS) safe.
   For additional information, refer to: Standard Workshop Practices (100-00, Description and Operation).

3. Remove the front seat cushion and front seat cushion cover from the front seat base.
   For additional information, refer to: Front Seat Cushion Cover (501-10, Removal and Installation).

4.

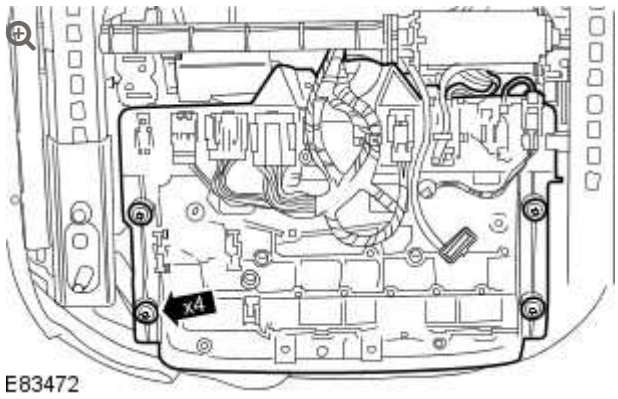

Reposition the front seat base wiring harness trim panel.

- Reposition the front seat for access.
- Remove the 4 screws.

5.

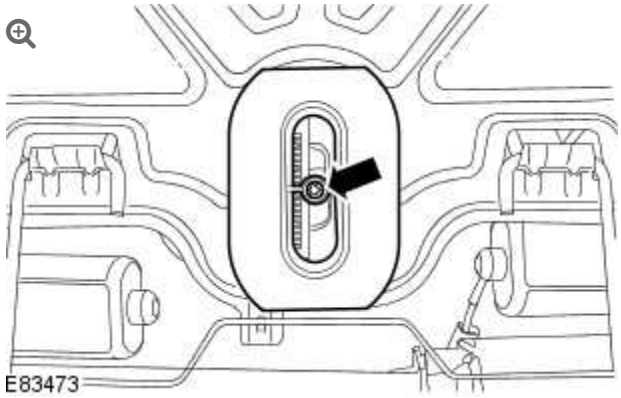

Remove the front seat cushion heater and blower motor assembly duct.

- Remove the screw.

6.

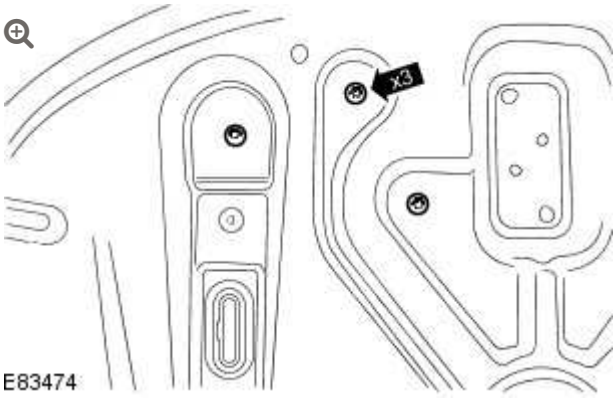

Remove the 3 screws from the front seat heater and blower motor assembly.

7.

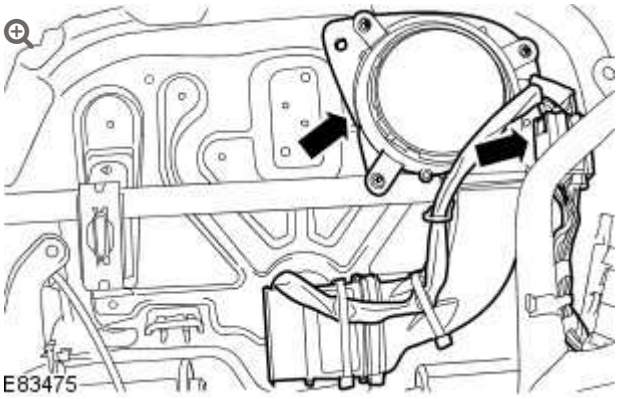

Remove the front seat cushion heater and blower motor assembly.

- Disconnect the front seat cushion heater and blower motor assembly electrical connector.

INSTALLATION

1. Install the front seat cushion heater and blower motor assembly.
   - Connect the front seat cushion heater and blower motor assembly electrical connector.

2.

Install the 3 screws to the front seat cushion heater and blower motor assembly.

3. Install the front seat cushion heater and blower motor assembly duct.
   - Install the screw.

4. Reposition the front seat base wiring harness trim panel.
   - Reposition the front seat for access.
   - Install the 4 screws.

5. Install the front seat cushion and cover to the front seat base.
   For additional information, refer to: Front Seat Cushion Cover (501-10, Removal and Installation).

6. Connect the battery ground cable.
   For additional information, refer to: Specifications (414-00, Specifications).

SEATING

FRONT SEAT HEAD RESTRAINT – VEHICLES WITH: HEAD RESTRAINT VIDEO DISPLAY (G1240173)

REMOVAL AND INSTALLATION

REMOVAL

WARNINGS:

- Persons working on the supplemental restraint system (SRS) must be fully trained and have been issued with the safety guidelines.
- Allow a period of 10 minutes to elapse after disconnecting the battery before undertaking any work on the SRS.
- The SRS electrical connectors are unique. DO NOT force, or attempt to connect electrical connectors to the wrong sockets.
- The correct procedures must always be used when working on SRS components.
- It is imperative that before any work is undertaken on the SRS system, the appropriate information is read thoroughly.
- Always disconnect both battery cables before beginning work on the SRS system. Disconnect the ground cable first. Never reverse connect the battery.
- Take extra care when handling SRS components.

1. Reposition the front seat backrest for access.
    - Reposition the front seat head restraint to the fully extended position.

2. Disconnect the battery ground cable.
   For additional information, refer to: Specifications (414-00, Specifications).

3. Make the air bag supplemental restraint system (SRS) safe.
   For additional information, refer to: Standard Workshop Practices (100-00, Description and Operation).

4. Remove the front seat backrest lower rear cover.
   For additional information, refer to: Front Seat Backrest Lower Rear Cover (501-10, Removal and Installation).

5. 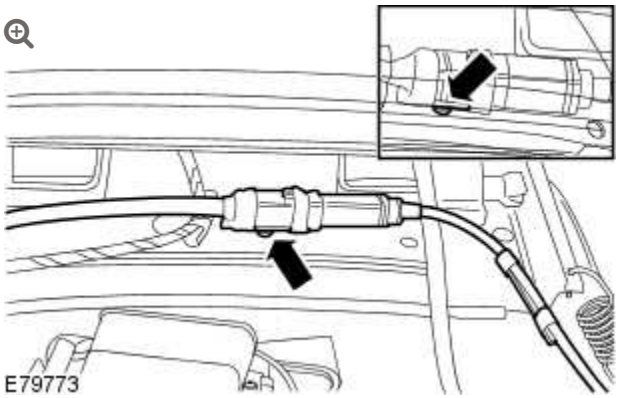

   Disconnect the front seat head restraint video display electrical connector.

   - Release the clip.

6. **CAUTION:**

   Make sure that the head restraint is not withdrawn further than 15 mm (0.60 inch) from the head restraint guide tubes.



   Release the front seat head restraint.

   -

Release the front seat head restraint from the head restraint clips.

7.

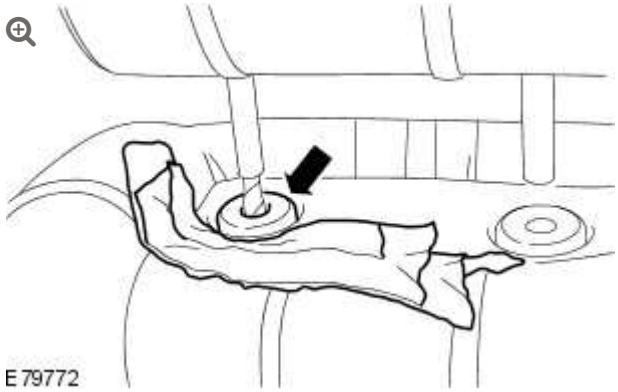

Release the RH head restraint guide tube.

- Apply suitable protective tape around the RH head restraint guide tube.
- Using a suitable tool, release the RH head restraint guide tube.

8.

CAUTION:

Make sure no damage occurs to the video display wiring harness.

NOTE:

Note the position of the wiring harnesses to aid installation.

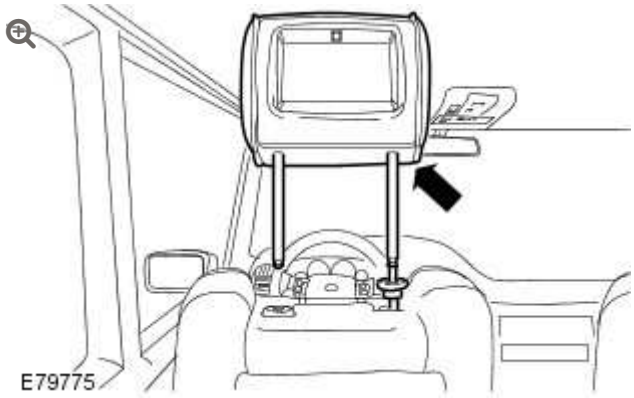

Remove the front seat head restraint.

- Feed the front seat head restraint video wiring harness through the front seat backrest cover and the seat frame.

INSTALLATION

1.

CAUTIONS:

- Make sure the wiring harness is installed to its original position.
- Make sure no damage occurs to the video display wiring harness.

Install the front seat head restraint.

- Feed the front seat head restraint video wiring harness through the front seat backrest cover and the seat frame.

2. Secure the RH head restraint guide tube.
   - Remove the protective tape from around the RH head restraint guide tube.

3. Remove the suitable tape from the front seat head restraint post clip.
   - Secure the front seat head restraint post clip to the RH head restraint post.

4. **CAUTION:**

   Make sure the plastic insert is correctly installed to the RH head restraint post. Failure to follow this instruction may result in damage to the vehicle.

   Secure the front seat head restraint.
   - Secure the front seat head restraint to the head restraint clips.

5. Connect the front seat head restraint video display electrical connector.
   - Secure the clip.

6. Install the front seat backrest lower rear cover.
   For additional information, refer to: Front Seat Backrest Lower Rear Cover (501-10, Removal and Installation).

7. Connect the battery ground cable.
   For additional information, refer to: Specifications (414-00, Specifications).

8. Reposition the front seat backrest to its original position.
   - Reposition the front seat head restraint to its original position.

SEATING

FRONT SEAT HEAD RESTRAINT – VEHICLES WITHOUT: HEAD RESTRAINT VIDEO DISPLAY (G878314)

REMOVAL AND INSTALLATION

REMOVAL

1. Reposition the front seat backrest for access.

2. **WARNING:**

   The head restraint will release suddenly, keep face clear during removal. Failure to follow this instruction may result in personal injury.



Remove the front seat head restraint.

- Reposition the front seat head restraint to the fully extended position.
- Release the front seat head restraint from the head restraint clips.

INSTALLATION

1. Install the front seat head restraint.
   - Secure the front seat head restraint to the head restraint clips.
   - Reposition the front seat head restraint to the original position.
2. Reposition the front seat backrest to the original position.

SEATING

FRONT SEAT HEAD RESTRAINT MOTOR (G875471)

REMOVAL AND INSTALLATION

78.70.31	MOTOR - HEIGHT ADJUSTMENT - HEAD RESTRAINT - FRONT SEAT - RENEW	ALL DERIVATIVES	1.3	USED WITHINS	+

REMOVAL

WARNINGS:

- Persons working on the supplemental restraint system (SRS) must be fully trained and have been issued with the safety guidelines.
- Allow a period of 10 minutes to elapse after disconnecting the battery before undertaking any work on the SRS.
- The SRS electrical connectors are unique. DO NOT force, or attempt to connect electrical connectors to the wrong sockets.
- The correct procedures must always be used when working on SRS components.
- It is imperative that before any work is undertaken on the SRS system, the appropriate information is read thoroughly.
- Always disconnect both battery cables before beginning work on the SRS system. Disconnect the ground cable first. Never reverse connect the battery.
- Take extra care when handling SRS components.

1. Disconnect the battery ground cable.
   For additional information, refer to: Specifications (414-00, Specifications).

2. Make the air bag supplemental restraint system (SRS) safe.
   For additional information, refer to: Standard Workshop Practices (100-00, Description and Operation).

3. Remove the front seat head restraint.
   For additional information, refer to: Front Seat Head Restraint - Vehicles With: Head Restraint Video Display (501-10, Removal and Installation).

4. Remove the seat armrest.
   For additional information, refer to: Seat Armrest (501-10, Removal and Installation).

5. 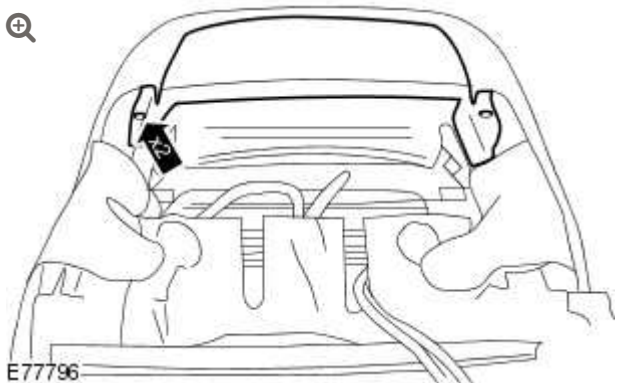

   Remove the front seat backrest cover upper trim panel.

   - Remove the 2 screws.
   - Release the front seat backrest cover from the front seat backrest upper trim panel.

6. 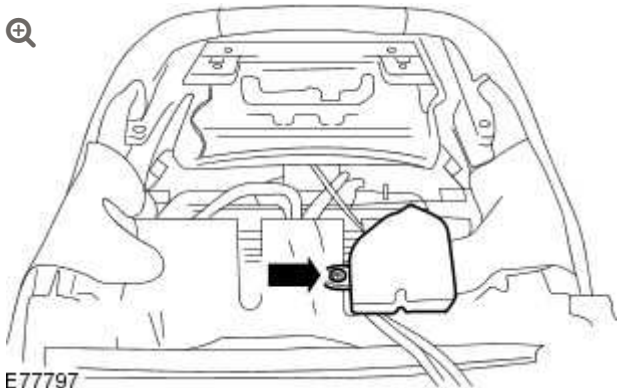

   Remove the front seat backrest cooling duct.

   - Remove the clip from the front seat backrest cooling duct.

7.

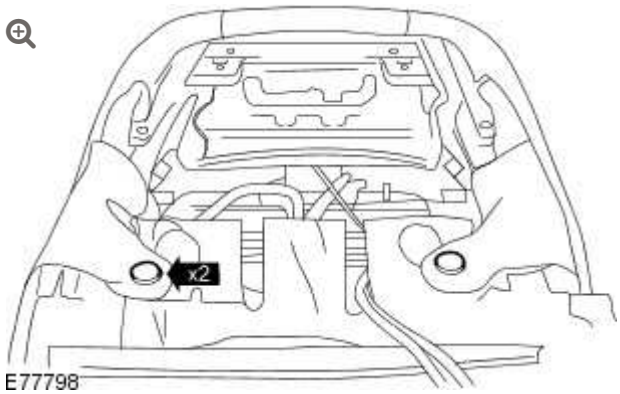

Remove and discard the 2 clips from the front seat backrest cover.

8.

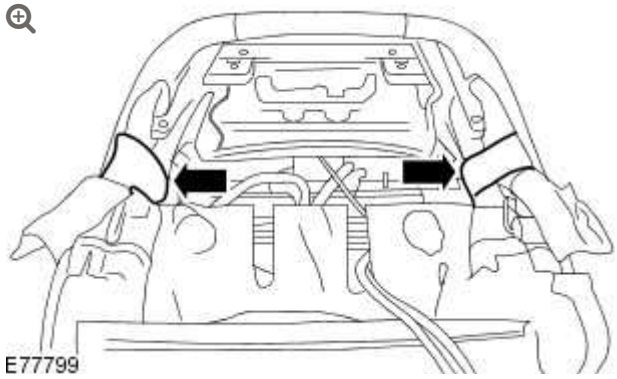

Release the 2 outer tension straps from the front seat backrest.

9.

WARNING:

The air bag is mounted directly under this component, extreme care is necessary. Failure to follow this instruction may result in personal injury.

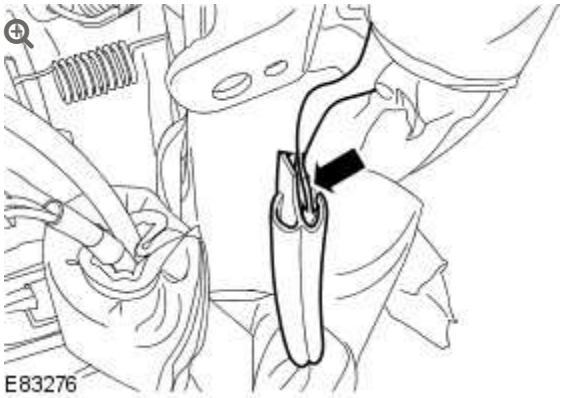

Release the front seat side air bag sleeve from the front seat backrest cover outer tension strap.

10.

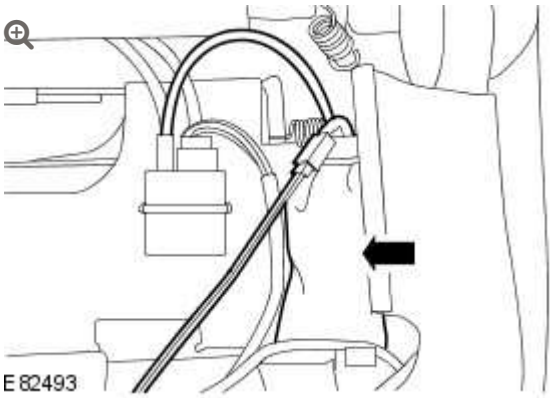

Reposition the lumbar motor control valve.

11.

WARNING:

The air bag is mounted directly under this component, extreme care is necessary. Failure to follow this instruction may result in personal injury.

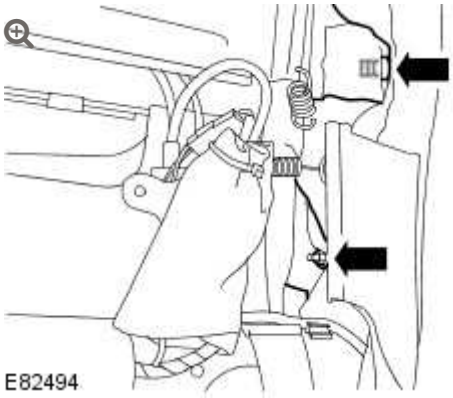

Release the front seat side air bag sleeve.

- Remove and discard the front seat side air bag sleeve bolt.
- Remove and discard the front seat side air bag lower nut.

12.

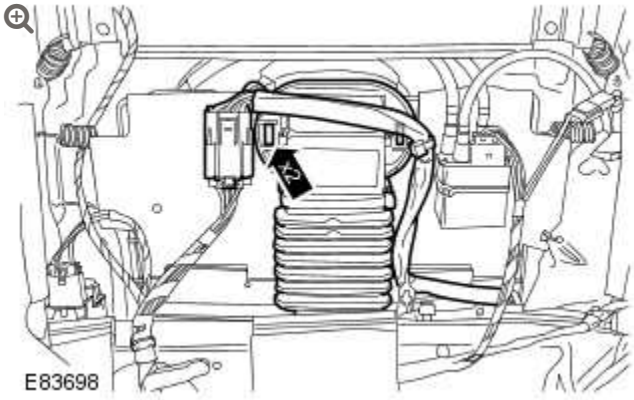

Reposition the front seat backrest heater and blower motor assembly.

- Carefully release the 2 clips.

13.

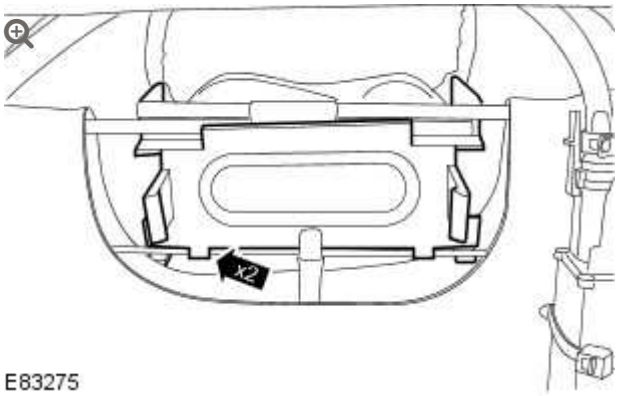

Reposition the front seat backrest heater and blower motor assembly duct.

- Release the 2 clips.

14.

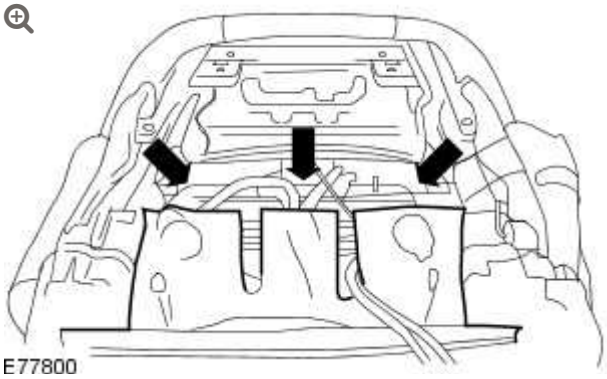

Release the 3 inner central tension straps from the front seat backrest.

- Reposition the front seat backrest cover inner central tension straps to the front.

15.

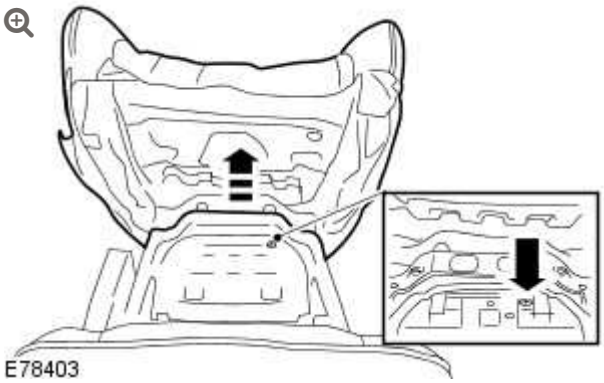

Remove the front seat head restraint motor screw.

- Raise the front seat backrest cover from the front seat frame for access.

16.

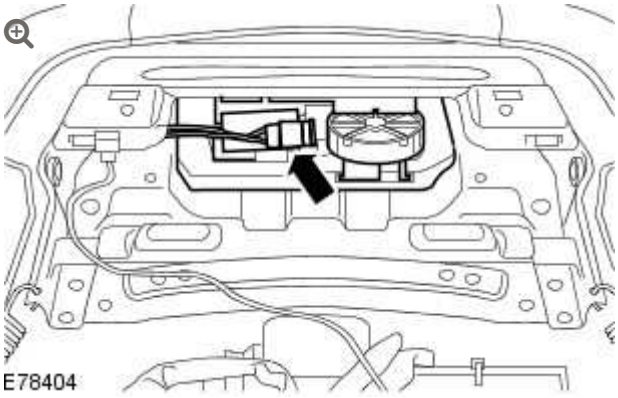

Remove the front seat head restraint motor.

- Disconnect the electrical connector.
- Release the front seat head restraint motor from the front seat frame.

INSTALLATION

1. Install the front seat head restraint motor.
   - Secure the front seat head restraint motor to the front seat frame.
   - Connect the electrical connector.

2. Install the front seat head restraint motor screw.
   - Reposition the front seat backrest cover to the original position.

3. **WARNING:**

   Make sure the front seat air bag sleeve and front seat backrest cover outer tension straps, are secure and correctly installed to the front seat frame to allow the air bag to deploy correctly. Failure to follow this instruction may result in personal injury.

   CAUTION:

   Make sure the front seat air bag sleeve and front seat backrest cover outer tension straps, are secure and correctly installed to the front seat frame to allow the air bag to deploy correctly. Failure to follow this instruction may result in damage to the vehicle.

   Secure the 3 inner central tension straps to the front seat backrest.
   - Reposition the front seat backrest cover inner central tension straps to the rear.

4. Reposition the front seat backrest heater and blower motor assembly duct.
   - Secure the 2 clips.

5. Reposition the front seat backrest heater and blower motor assembly.
   - Secure the 2 clips.

6.

WARNINGS:

- Make sure the front seat air bag sleeve and front seat backrest cover outer tension straps, are secure and correctly installed to the front seat frame to allow the air bag to deploy correctly. Failure to follow this instruction may result in personal injury.
- The air bag is mounted directly under this component, extreme care is necessary. Failure to follow this instruction may result in personal injury.

CAUTION:

Make sure the front seat air bag sleeve and front seat backrest cover outer tension straps, are secure and correctly installed to the front seat frame to allow the air bag to deploy correctly. Failure to follow this instruction may result in damage to the vehicle.

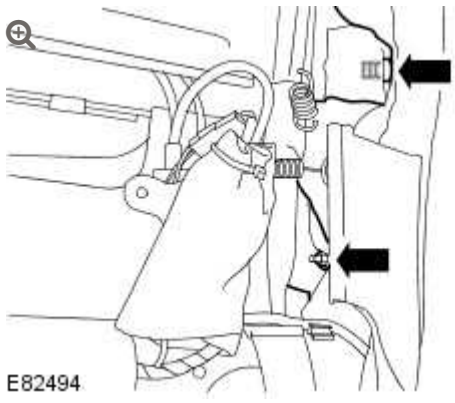

Secure the front seat side air bag sleeve.

- Tighten the new bolt to 3 Nm (2 lb.ft).
- Tighten the new nut to 7 Nm (5 lb.ft).

7. Reposition the lumbar motor control valve.

8. **WARNINGS:**

- Make sure the front seat air bag sleeve and front seat backrest cover outer tension straps, are secure and correctly installed to the front seat frame to allow the air bag to deploy correctly. Failure to follow this instruction may result in personal injury.
- The air bag is mounted directly under this component, extreme care is necessary. Failure to follow this instruction may result in personal injury.

CAUTION:

Make sure the front seat air bag sleeve and front seat backrest cover outer tension straps, are secure and correctly installed to the front seat frame to allow the air bag to deploy correctly. Failure to follow this instruction may result in damage to the vehicle.

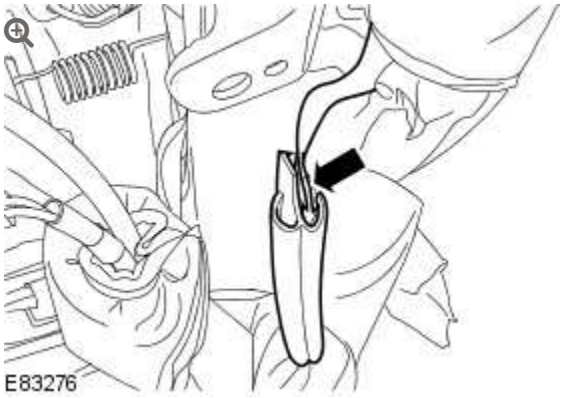

Secure the front seat side air bag sleeve to the front seat backrest cover outer tension strap.

9.

WARNING:

Make sure the front seat air bag sleeve and front seat backrest cover outer tension straps, are secure and correctly installed to the front seat frame to allow the air bag to deploy correctly. Failure to follow this instruction may result in personal injury.

CAUTION:

Make sure the front seat air bag sleeve and front seat backrest cover outer tension straps, are secure and correctly installed to the front seat frame to allow the air bag to deploy correctly. Failure to follow this instruction may result in damage to the vehicle.

Secure the 2 outer tension straps to the front seat backrest.

10. Install the 2 new clips to the front seat backrest cover.

11. Install the front seat backrest cooling duct.
    - Install the clip to the front seat backrest cooling duct.

12. Install the front seat backrest cover upper trim panel.
    - Install the front seat backrest cover to the front seat backrest upper trim panel.
    - Install the 2 screws.

13. Install the seat armrest.
    For additional information, refer to: Seat Armrest (501-10, Removal and Installation).

14. Install the front seat head restraint.
    For additional information, refer to: Front Seat Head Restraint - Vehicles With: Head Restraint Video Display (501-10, Removal and Installation).

15. Connect the battery ground cable.
    For additional information, refer to: Specifications (414-00, Specifications).

SEATING

FRONT SEAT RECLINER MOTOR (G875487)

REMOVAL AND INSTALLATION

78.70.34	MOTOR – RECLINING MECHANISM – FRONT SEAT – RENEW	ALL DERIVATIVES	1.4	USED WITHINS	+

REMOVAL

WARNINGS:

- Persons working on the supplemental restraint system (SRS) must be fully trained and have been issued with the safety guidelines.
- Allow a period of 10 minutes to elapse after disconnecting the battery before undertaking any work on the SRS.
- The SRS electrical connectors are unique. DO NOT force, or attempt to connect electrical connectors to the wrong sockets.
- The correct procedures must always be used when working on SRS components.
- It is imperative that before any work is undertaken on the SRS system, the appropriate information is read thoroughly.
- Always disconnect both battery cables before beginning work on the SRS system. Disconnect the ground cable first. Never reverse connect the battery.
- Take extra care when handling SRS components.

1. Disconnect the battery ground cable.
   For additional information, refer to: Specifications (414-00, Specifications).

2. Make the air bag supplemental restraint system (SRS) safe.
   For additional information, refer to: Standard Workshop Practices (100-00, Description and Operation).

3. Remove the front seat backrest cover.
   For additional information, refer to: Front Seat Backrest Cover (501-10, Removal and Installation).

4.

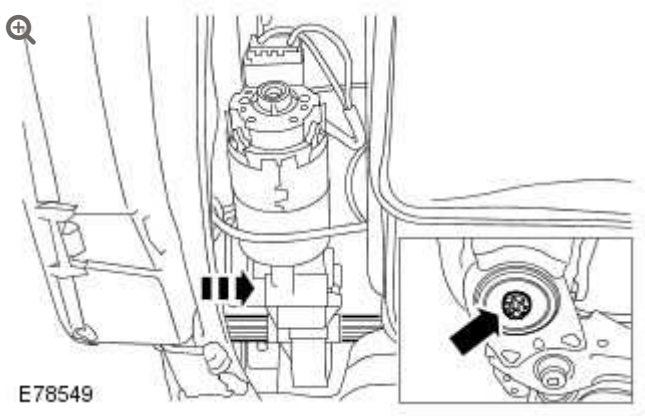

Reposition the front seat backrest shaft.

- Remove and discard the front seat backrest shaft clip.

5.

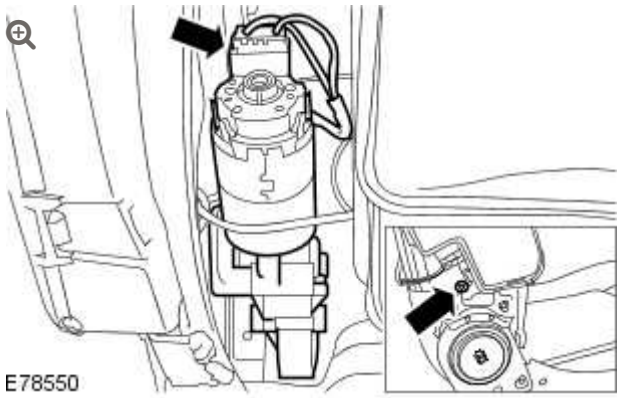

Remove the front seat recliner motor.

- Disconnect the electrical connector.
- Remove the front seat recliner motor bolt.

6.

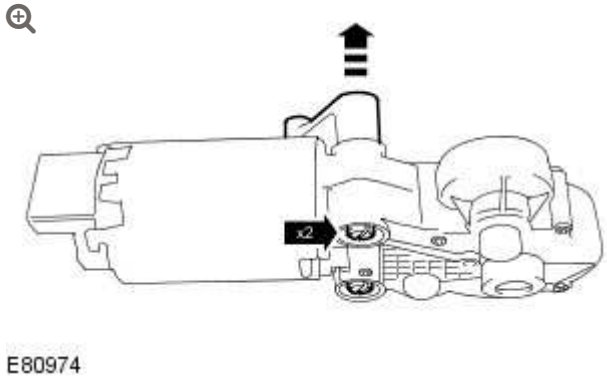

Remove the front seat recliner motor bracket.

- Release the 2 clips.

INSTALLATION

1. Install the front seat recliner motor bracket.
   - Secure the 2 clips.
2. Install the front seat recliner motor.
   - Loosely install the front seat recliner motor bolt.
   - Connect the electrical connector.
3. Reposition the front seat backrest shaft.
   - Install the new front seat backrest shaft clip.
   - Tighten the front seat recliner motor bolt.
4. Install the front seat backrest cover.
   For additional information, refer to: Front Seat Backrest Cover (501-10, Removal and Installation).
5. Make the air bag supplemental restraint system (SRS) safe.
   For additional information, refer to: Standard Workshop Practices (100-00, Description and Operation).
6. Connect the battery ground cable.
   For additional information, refer to: Specifications (414-00, Specifications).

SEATING

DIAGNOSIS AND TESTING

PRINCIPLES OF OPERATION

For a detailed description of the Heater Mats, refer to the relevant Description and Operation section in the workshop manual. REFER to: Seats (501-10 Seating, Description and Operation).

INSPECTION AND VERIFICATION

CAUTION:

Diagnosis by substitution from a donor vehicle is **NOT** acceptable. Substitution of control modules does not guarantee confirmation of a fault, and may also cause additional faults in the vehicle being tested and/or the donor vehicle.

NOTES:

- If a control module or a component is suspect and the vehicle remains under manufacturer warranty, refer to the Warranty Policy and Procedures manual, or determine if any prior approval programme is in operation, prior to the installation of a new module/component.
- When performing voltage or resistance tests, always use a digital multimeter accurate to three decimal places, and with an up-to-date calibration certificate. When testing resistance always take the resistance of the digital multimeter leads into account.
- Check and rectify basic faults before beginning diagnostic routines involving pinpoint tests.

1. Verify the customer concern

2. Visually inspect for obvious signs of damage and system integrity

Visual Inspection

MECHANICAL	ELECTRICAL
▪ Seat heater switches	▪ Fuses ▪ Wiring harnesses and connectors

3. If an obvious cause for an observed or reported concern is found, correct the cause (if possible) before proceeding to the next step

4. If the cause is not visually evident, verify the symptom and refer to the Symptom Chart, alternatively check for Diagnostic Trouble Codes (DTCs) and refer to the DTC Index

5. Check DDW for open campaigns. Refer to the corresponding bulletins and SSMs which may be valid for the specific customer complaint and carry out the recommendations as required

SYMPTOM CHART

SYMPTOM	POSSIBLE CAUSES	ACTION
Seat heating performance poor or inoperative	▪ Seat heater element circuit short circuit to ground, short circuit to power, open circuit, high resistance	▪ GO to Pinpoint Test **A.**

SEAT HEATER MAT FAULTS – DIAGNOSTIC GUIDANCE

- **Seat Heater Sensor Faults** - Each seat has two heating elements: one in the base (seat cushion), and one in the back (squab). There is only one sensor, which is located in the base. This sensor controls both heating elements. If there is a fault with the sensor signal, neither element will operate. If the signal fault is traced to the sensor itself (in the base/seat cushion mat), there is no need to replace the back/squab heater mat.
- **Diagnosis Of Seat Heater Elements Using Resistance Measurements** - The back/squab heater mat consists of a heating element, the base/seat cushion heater mat consists of a heating element with a sensor. Most faults can be confirmed by simple electrical resistance measurements, using the values listed below. It is possible that the sensor could develop a fault causing it to exhibit either higher resistance (resulting in the seat heaters operating at too high a temperature), or lower resistance (resulting in the seat heaters operating at too low a temperature or not at all), but these kinds of faults are uncommon. The maximum resistance of the seat elements are only about 1 ohm each under

normal operation, so it is difficult to take an exact reading with a standard multimeter. However, the most likely cause of failure is breaks in a number of the heater element wires, which causes both a significant loss of heating and a corresponding significant increase in resistance. In this situation, both (seat cushion AND squab) elements produce less heat, but contrary to expectation, it is the undamaged element which will show the greatest loss of heating. Given this, suspected seat heater element failures should always be confirmed by electrical resistance tests before replacement. Do not replace components based only on temperature performance.

- **Simultaneous Failure of Both Seat Heater Mats Is Unlikely** - The base/seat cushion and back/squab seat heater elements connect to the automatic temperature control module, but the control module only acts as a splice box and the elements are electrically wired in series (each drawing proportion of battery voltage). The only way for one element to operate while the other is faulty is if one is the elements has a short-circuit fault. Under normal circumstances, where short-circuit faults are present these will be detected by the automatic temperature control module which will switch off both elements. Similarly, if the sensor (in the base/seat cushion element) is faulty, the automatic temperature control module will not apply voltage to the elements and, if one element is open-circuit, then no voltage can be supplied to the other element. Given this, while it may often be the case that both elements cease to operate, it is extremely unlikely that both heater mats are faulty. Consequently, if a fault is confirmed with one of the seat heater mats, do not also replace the other.
- **Seat Heater Sensor Open Circuit Faults** - Previous investigations have found the mostly likely failure mode to be associated with the seat heater sensor (in the base/seat cushion element) developing an open-circuit fault. This can be measured by disconnecting the 4-way plug from the automatic temperature control module, and (Test 1) testing the circuit into the harness; if an open-circuit fault is

detected, then test the circuit at the connector under the seat (Test 2). If the open-circuit fault is present both at Test 1 and Test 2, then suspect the seat heater sensor and replace the base/seat cushion element. If the open circuit fault is detected at Test 1 but NOT at Test 2, then the harness is most likely faulty

SEAT HEATER MAT APPLICATION CHART

NOTE:

To ensure an accurate resistance reading, calibrated test equipment **must** be used.

VEHICLE /YEAR	CUSHION / BACKREST	HEATER MAT / NTC RESISTOR	LEFT HAND DRIVE		RIG
			PASSENGER SIDE CONNECTOR / PIN	DRIVER SIDE CONNECTOR / PIN	PASSEN SIDI CONNEC PIN
Discovery 3 (L319) 2006	Cushion	Heater element	C2950-1 and C2950-4	C0085-1 and C0085-4	C2950-1 a C2950-4
		NTC resistor	C2950-2 and C2950-3	C0085-2 and C0085-3	C2950-2 a C2950-3
	Backrest	Heater element	connected in series	connected in series	connecte series
Discovery 4 (L319) 2010	Cushion	Heater element	C3542-1 and C3542-4	C3542-1 and C3542-4	C3542-1 a C3542-4
		NTC resistor	C3542-2 and C3542-3	C3542-2 and C3542-3	C3542-2 a C3542-3
	Backrest	Heater element	C3543-1 and C3543-2	C3543-1 and C3543-2	C3543-1 a C3543-2
Range Rover Sport (L320) 2010	Cushion	Heater element	C3542-1 and C3542-4	C3542-1 and C3542-4	C3542-1 a C3542-4

VEHICLE /YEAR	CUSHION / BACKREST	HEATER MAT / NTC RESISTOR	LEFT HAND DRIVE		RIG
			PASSENGER SIDE CONNECTOR / PIN	DRIVER SIDE CONNECTOR / PIN	PASSEN SIDI CONNEC PIN
		NTC resistor	C3542-2 and C3542-3	C3542-2 and C3542-3	C3542-2 a C3542-3
	Backrest	Heater element	C3543-1 and C3543-2	C3543-1 and C3543-2	C3543-1 a C3543-2
Freelander 2 (L359)	Cushion	Heater element	C3HS08C-1 and C3HS08C-4	C3HS03C-1 and C3HS03C-4	C3HS08C and C3HS08C
		NTC resistor	C3HS08C-2 and C3HS08C-3	C3HS03C-2 and C3HS03C-3	C3HS08C and C3HS08C
	Backrest	Heater element	C3HS08B-1 and C3HS08B-2	C3HS03B-1 and C3HS03B-2	C3HS08B and C3HS08B
Range Rover (L322) 2010	Cushion	Heater element	C0969-1 and C0969-4	C2090-1 and C2090-4	C2090-1 a C2090-4
		NTC resistor	C0969-2 and C0969-3	C2090-2 and C2090-3	C2090-2 a C2090-3
	Backrest	Heater element	C0971-1 and C0971-2	C2091-1 and C2091-2	C2091-1 a C2091-2
	Rear Seat Cushion	Heater element	C2043-2 and C3030-1	C2042-2 and C3030-1	C2042-2 a C3030-1
		NTC resistor	C2043-1 and C2043-3	C2042-1 and C2042-3	C2042-1 a C2042-3
	Rear Seat Backrest	Heater element	C3030-1 and C3030-2	C2993-1 and C2993-2	C2993-1 a C2993-2
Range Rover Evoque(L538)	Cushion	Heater element	C3HS07BBM-1 and C3HS07BBM-4	C3HS02ABM-1 and C3HS02ABM-4	C3HS07B and C3HS07B
		NTC resistor	C3HS07BBM-2 and C3HS07BBM-3	C3HS02ABM-2 and C3HS02ABM-3	C3HS07B and C3HS07B
	Backrest	Heater element			

VEHICLE /YEAR	CUSHION / BACKREST	HEATER MAT / NTC RESISTOR	LEFT HAND DRIVE		RIC
			PASSENGER SIDE CONNECTOR / PIN	DRIVER SIDE CONNECTOR / PIN	PASSEN SIDI CONNEC PIN
			C3HS06ABM-1 and C3HS06ABM-2	C3HS01ABM-1 and C3HS01ABM-2	C3HS06A and C3HS06A
Discovery Sport (L550)	Cushion	Heater mat	C3HS07BBM-1 and C3HS07BBM-4	C3HS02ABM-1 and C3HS02ABM-4	C3HS07B and C3HS07B
		NTC resistor	C3HS07BBM-2 and C3HS07BBM-3	C3HS02ABM-2 and C3HS02ABM-3	C3HS07B and C3HS07B
	Backrest	Heater mat	C3HS06AAM-1 and C3HS06AAM-2	C3HS01AAM-1 and C3HS01AAM-2	C3HS06A and C3HS06A
Defender (L316)	Cushion	Heater mat	C0237-1 and C0237-2	C0237-1 and C0237-2	C0237-1 a C0237-2
		NTC resistor	-	-	-
	Backrest	Heater mat	-	-	-

DTC INDEX

For a list of Diagnostic Trouble Codes (DTCs) that could be logged on this vehicle, please refer to Section 100-00.

PINPOINT TESTS

NOTE:

On full power the seat should be hot to touch

NOTE:

The seat heater power supply cycles on and off dependant on the seat and cabin temperature and may only switch on for 5 seconds in 30 seconds.

NOTES:

- Ensure the multimeter used is calibrated and a resistance reading of 0 ohms is shown when the test leads are connected together. Alternately, subtract any resistance shown from the result.
- The heated seat element circuits should be checked at the seat heater module connector (where possible).
- Refer to the electrical circuit diagrams and to confirm the total resistance of the circuit the cushion and backrest are connected in series.

PINPOINT TEST A : HEATED SEAT TESTS	
TEST CONDITIONS	DETAILS/RESULTS/ACTIONS
A1: DTC READ	
	1 Using the manufacturer approved diagnostic system, check the climate control system for related DTCs (where possible)
	Are any heated seat DTCs set? **Yes** Perform the relevant corrective actions. Clear the DTCs and retest. If the fault persists, GO to A2. **No** GO to A2.
A2: MANUAL CHECK	
	1

PINPOINT TEST A : HEATED SEAT TESTS	
	If necessary, operate the vehicle air conditioning on full for 10 minutes to reduce the temperature of the vehicle interior
	2 Operate the heated seats on full power
	Do the heated seats operate correctly? **Yes** Using the manufacturer approved diagnostic system, clear the DTCs (where possible) and retest. If the operation of the heated seats is correct no further action is necessary **No** GO to A3.
A3: SHORT CIRCUIT TO GROUND	
	1 Refer to the electrical circuit diagrams and the Seat Heater Mat Application Chart (see above) to identify the connector
	2 Disconnect the connector
	3 Refer to the electrical circuit diagrams and check the heated seat element circuit for short circuit to ground
	Is there a short circuit to ground? **Yes** Repair the circuit or install a new heated seat element as necessary. Using the manufacturer approved diagnostic system, clear the DTCs (where possible) and retest **No** GO to A4.
A4: CIRCUIT CONTINUITY TEST	
	1 Refer to the electrical circuit diagrams and check the heated seat element circuit for open circuit, high resistance
	Is the heated seat element circuit resistance within specification? **Yes** GO to A5. **No** Repair the circuit or install a new heated seat element as necessary. Using the manufacturer approved diagnostic system, clear the DTCs (where possible) and retest
A5: POWER CONSUMPTION	
	1 Reconnect the connector

PINPOINT TEST A : HEATED SEAT TESTS	
	2 If necessary, operate the vehicle air conditioning on full for 10 minutes to reduce the temperature of the vehicle interior
	3 Connect an inductive ammeter (current clamp) to the heated seat element circuit
	4 Operate the heated seats on full power
	5 Use the Seat Heater Mat Application Chart to calculate a typical current value (using I=V/R, **Current** equals **Volts** divided by **Resistance**). For example: ▪ 12 volts / 0.5 ohms = 24 amps ▪ 12 volts / 1 ohms = 12 amps ▪ 12 volts / 2 ohms = 6 amps
	Does the heated seat circuit draw the correct quantity of current? **Yes** Using the manufacturer approved diagnostic system, clear the DTCs (where possible) and retest. If the operation of the heated seats is correct no further action is necessary **No** GO to A6.
A6: RESISTANCE CHECK	
	1 Refer to the electrical circuit diagrams and the Seat Heater Mat Application Chart (see above) to identify the connector and terminals
	2 Disconnect the connector
	3 Using a multimeter, perform resistance measurements of the heated seat element circuit and the NTC resistor circuit (where possible)
	4 Compare the results to the Seat Heater Mat Application Chart
	Are the results within specification at the given ambient temperature? (tolerance ± 0.5 ohms) **Yes** Reconnect the connector. Using the manufacturer approved diagnostic system, clear the DTCs (where possible) and retest. If the fault persists, refer to electrical circuit diagrams and check the power and ground circuits **No**

PINPOINT TEST A : HEATED SEAT TESTS	
	Repair the circuit or install a new heated seat element as necessary. Using the manufacturer approved diagnostic system, clear the DTCs (where possible) and retest

SEATING

LUMBAR ASSEMBLY (G875350)

REMOVAL AND INSTALLATION

78.60.01	BLADDER - LUMBAR SUPPORT - FRONT SEAT - RENEW	ALL DERIVATIVES	0.9	USED WITHINS	+

REMOVAL

WARNINGS:

- Persons working on the supplemental restraint system (SRS) must be fully trained and have been issued with the safety guidelines.
- Allow a period of 10 minutes to elapse after disconnecting the battery before undertaking any work on the SRS.
- The SRS electrical connectors are unique. DO NOT force, or attempt to connect electrical connectors to the wrong sockets.
- The correct procedures must always be used when working on SRS components.
- It is imperative that before any work is undertaken on the SRS system, the appropriate information is read thoroughly.
- Always disconnect both battery cables before beginning work on the SRS system. Disconnect the ground cable first. Never reverse connect the battery.
- Take extra care when handling SRS components.

1. Disconnect the battery ground cable.
   For additional information, refer to: Specifications (414-00, Specifications).

2. Make the air bag supplemental restraint system (SRS) safe.
   For additional information, refer to: Standard Workshop Practices (100-00, Description and Operation).

3. Remove the front seat backrest lower rear cover.
   For additional information, refer to: Front Seat Backrest Lower Rear Cover (501-10, Removal and Installation).

4.

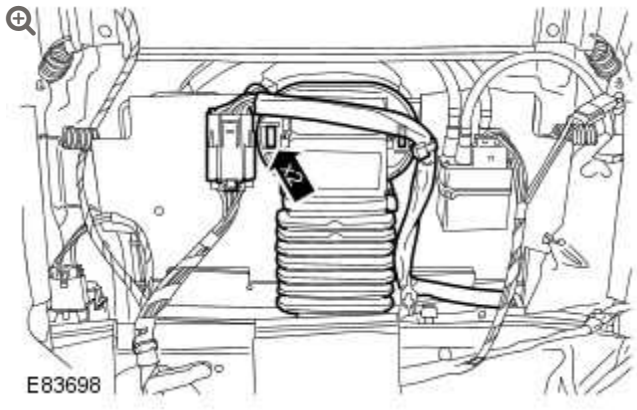

Reposition the front seat backrest heater and blower motor assembly.

- Carefully release the 2 clips.

5.

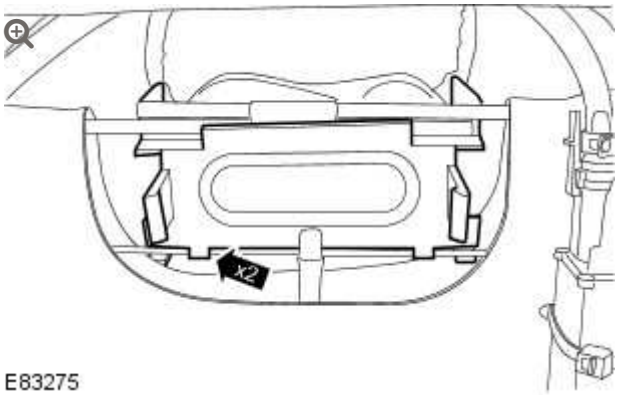

Reposition the front seat backrest heater and blower motor assembly duct.

- Release the 2 clips.

6.

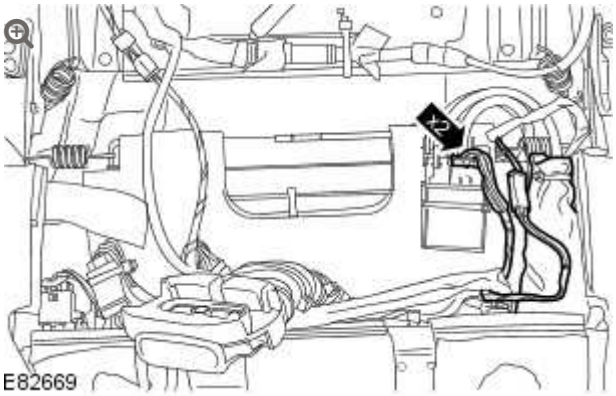

Reposition the lumbar motor control valve.

- Disconnect the 2 electrical connectors.

7.

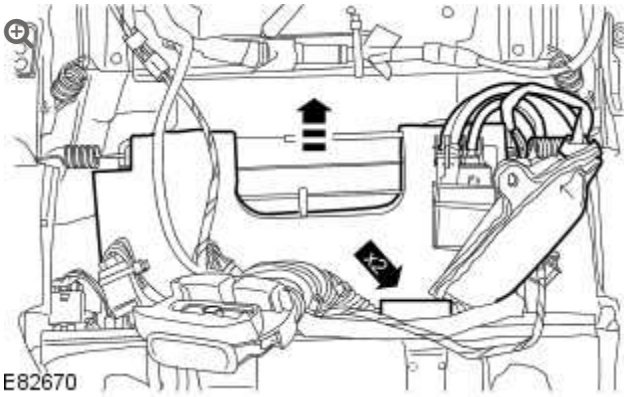

Remove the lumbar assembly.

- Release the 2 retaining tangs.

INSTALLATION

1.

NOTE:

Make sure the lumbar assembly is installed to its original position.

Install the lumbar assembly.

- Secure the 2 retaining tangs.

2. Reposition the lumbar motor control valve.
    - Connect the 2 electrical connectors.

3. Reposition the front seat backrest heater and blower motor assembly duct.
    - Secure the 2 clips.

4. Reposition the front seat backrest heater and blower motor assembly.
    - Secure the 2 clips.

5. Install the front seat backrest lower rear cover.
   For additional information, refer to: Front Seat Backrest Lower Rear Cover (501-10, Removal and Installation).

6. Connect the battery ground cable.
   For additional information, refer to: Specifications (414-00, Specifications).

SEATING

LUMBAR CONTROL SWITCH (G873656)

REMOVAL AND INSTALLATION

REMOVAL

NOTE:

Front seat shown removed for clarity.

1. Position the front seat fully forwards.

2. 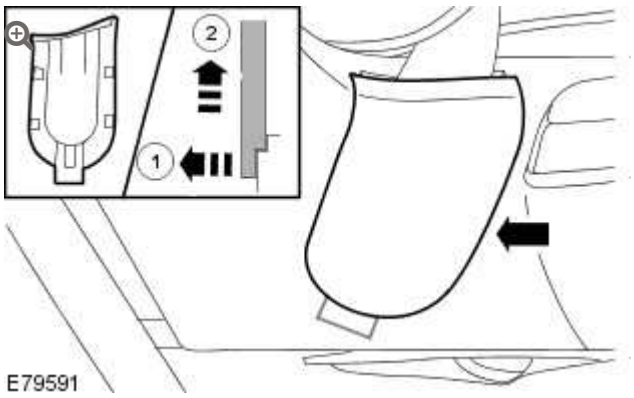

Remove the safety belt lower anchor bolt cover.

1. Carefully release the clip from behind the front seat base side trim panel.

2. Remove the cover.

3.

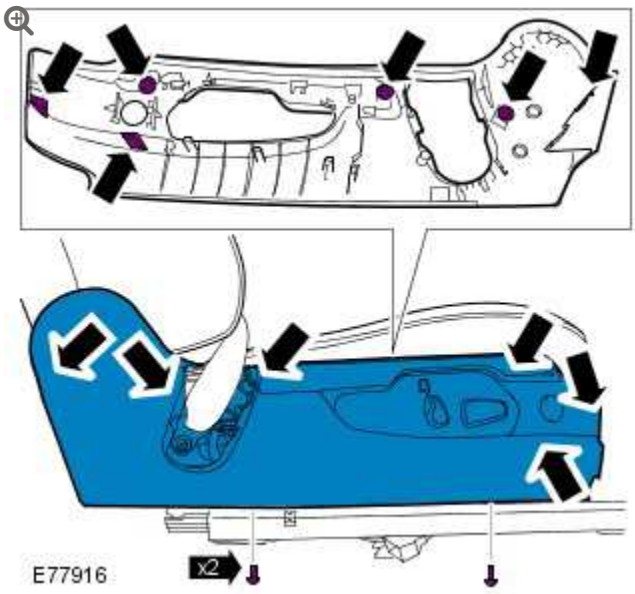

Carefully release the front seat base side trim panel.

- Remove the 2 screws.
- Release the 6 clips.

4.

NOTE:

Safety belt shown removed for clarity.

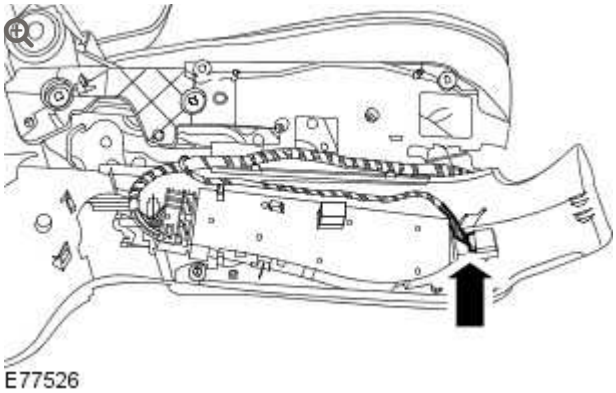

Disconnect the lumbar control switch electrical connector.

5. 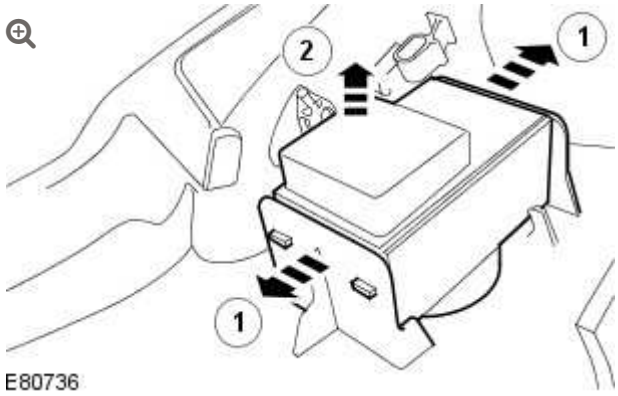

Remove the lumbar control switch.

1. Release the 2 clips.
2. Remove the switch.

INSTALLATION

1. Install the lumbar control switch.
   - Install the switch.
   - Secure the 2 clips.
2. Connect the lumbar control switch electrical connector.
3. Carefully install the front seat base side trim panel.
   - Secure the 6 clips.
   - Install the 2 screws.
4. Install the safety belt lower anchor bolt cover.
5. Reposition the front seat to the original position.

SEATING

REAR SEAT (G878482)

REMOVAL AND INSTALLATION

REMOVAL

1. 

   Remove the 2 bolts from the front of the rear seat hinge plates.

   - Fit protection around the door aperture to protect the interior.
   - Remove the 2 bolt covers from the front of the rear seat hinge plates.

2. Fold the rear seat fully forwards.
   - Release the rear seat backrest catch.

3.

CAUTION:

Make sure no damage is caused to the vehicle trim when removing the rear seat.

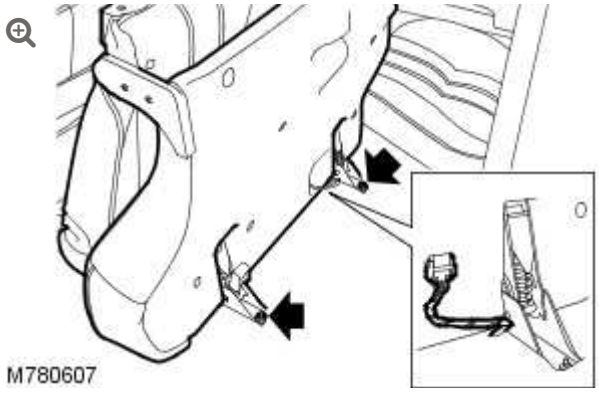

With assistance carefully remove the rear seat.

- Disconnect the electrical connector.
- Remove the 2 nuts from the rear of the rear seat hinge plates.

INSTALLATION

1.

CAUTION:

Make sure no damage is caused to the vehicle trim when installing the rear seat.

With assistance carefully install the rear seat.

- Install the 2 nuts to the rear of the rear seat hinge plates.
- Tighten to 25 Nm (18 lb.ft).
- Connect the electrical connector.

2. Fold the rear seat fully rearwards.
    - Secure the rear seat backrest catch.

3. Install the 2 bolts to the front of the rear seat hinge plates.
    - Tighten to 25 Nm (18 lb.ft).
    - Install the 2 bolt covers to the front of the rear seat hinge plates.
    - Remove the protection from around the door aperture.

SEATING

REAR SEAT ARMREST (G915106)

REMOVAL AND INSTALLATION

78.10.07	ARMREST - REAR SEAT - RENEW	ALL DERIVATIVES	0.2	USED WITHINS	+

REMOVAL

1. Reposition the RH rear seat fully forward.
   - Release the RH rear seat backrest catch.

2. 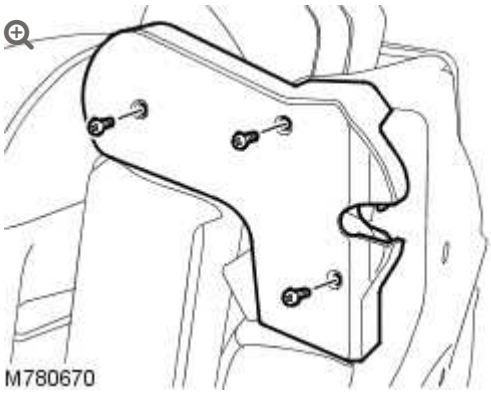

   Remove the LH rear seat backrest inner hinge cover.
   - Remove the 3 screws.

3. Reposition the rear seat armrest fully forwards.

- Release the rear seat armrest catch.

4. 

Release the rear seat armrest cover from the rear seat backrest.

- Release the rear seat armrest cover securing strip.
- Release the rear seat armrest cover securing rail.

5. 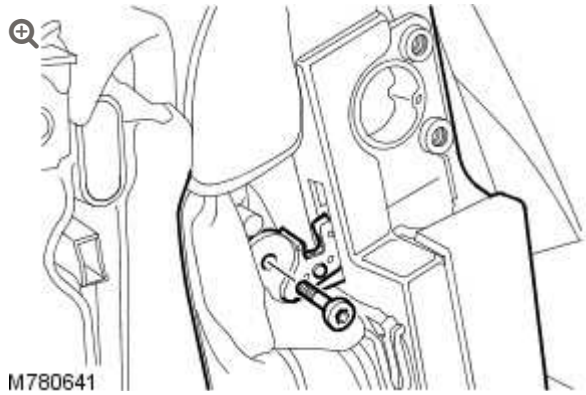

Remove the rear seat armrest.

- Remove the bolt.
- Reposition the rear seat armrest from the rear seat armrest hinge.

INSTALLATION

1. Install the rear seat armrest.

- Reposition the rear seat armrest to the rear seat armrest hinge.
- Install the bolt and tighten to 10 Nm (7 lb.ft).

2. Secure the rear seat armrest cover to the rear seat backrest.
   - Secure the rear seat armrest cover securing rail.
   - Secure the rear seat armrest cover securing strip.

3. Reposition the rear seat armrest to the original position.
   - Secure the rear seat armrest catch.

4. Install the LH rear seat backrest inner hinge cover.
   - Install the 3 screws.

5. Reposition the RH rear seat to the original position.
   - Secure the RH rear seat backrest catch.

SEATING

REAR SEAT BACKREST COVER (G899499)

REMOVAL AND INSTALLATION

78.90.12	COVER - BACKREST - REAR SEAT - SIDE - LH/EACH - RENEW	ALL DERIVATIVES	1.5	USED WITHINS	+

REMOVAL

1. Remove the rear seat.
   For additional information, refer to: Rear Seat (501-10, Removal and Installation).

2.

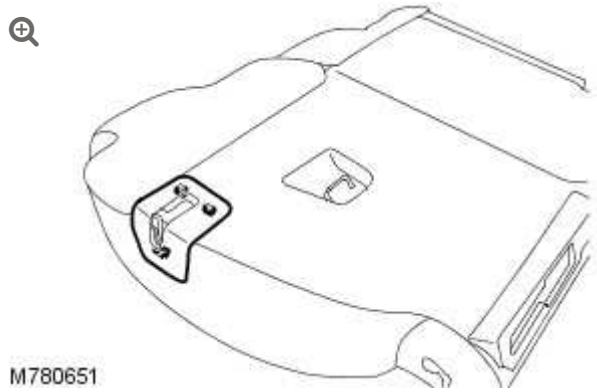

Remove the rear seat backrest catch trim panel.

- Release the 3 clips.

3.

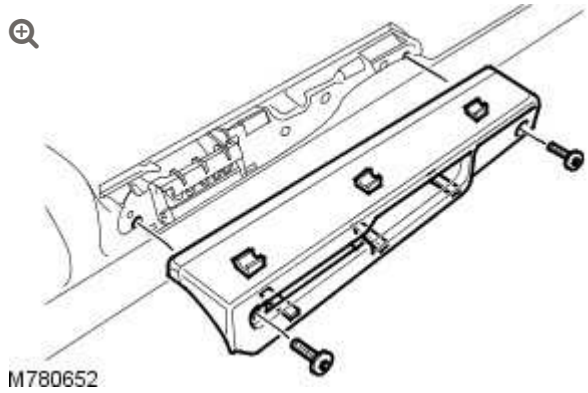

Remove the rear seat backrest rear cover lower trim panel.

- Remove the 2 screws.
- Release the 3 clips.

4.

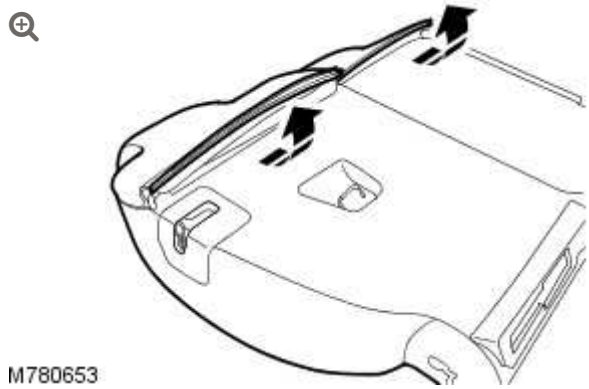

Carefully release the rear seat backrest cover from the upper part of the rear seat frame.

5.

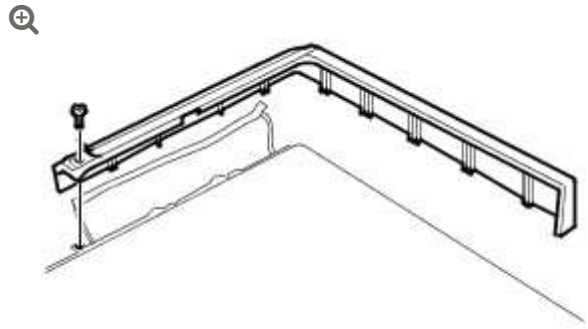

M780654

Remove the rear seat backrest rear cover inner side trim panel.

- Release the rear seat armrest cover securing strip.
- Remove the screw.
- Release the 11 inner side trim panel clips from the rear seat backrest cover.

6. Remove the rear seat backrest rear cover.
   - Release the rear seat backrest rear cover adhesive.

7.

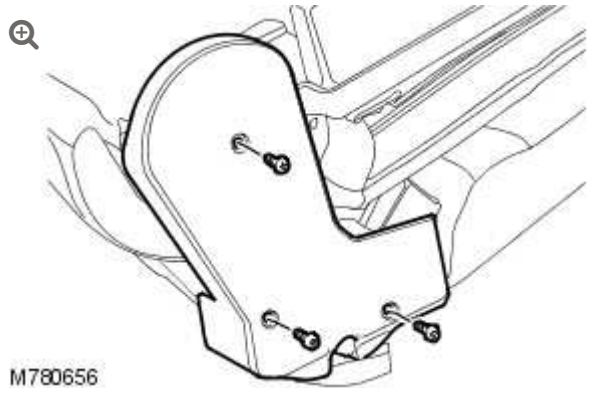

M780656

Remove the rear seat backrest inner hinge cover.

- Remove the 3 screws.

8.

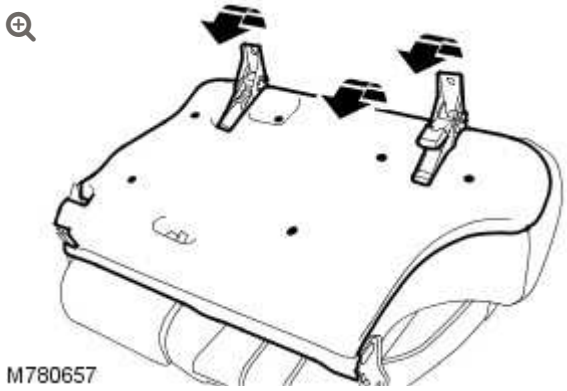

Remove the rear seat base lower trim panel.

- Remove the 6 clips.
- Reposition the rear seat hinge plates for access.

9. Reposition the rear seat armrest fully forwards.
   - Release the rear seat armrest catch.

10. 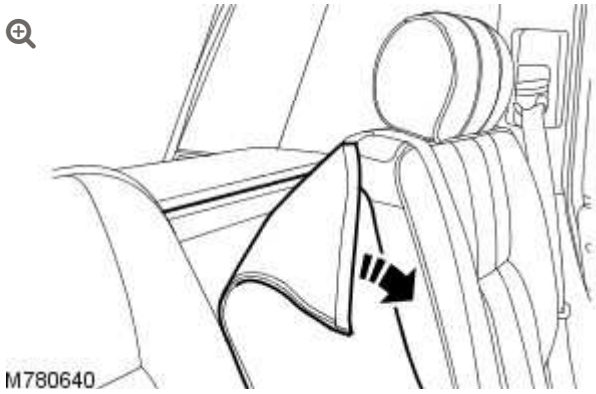

    Release the rear seat armrest cover from the rear seat backrest.
    - Release the rear seat armrest cover securing strip.
    - Release the rear seat armrest cover securing rail.

11.

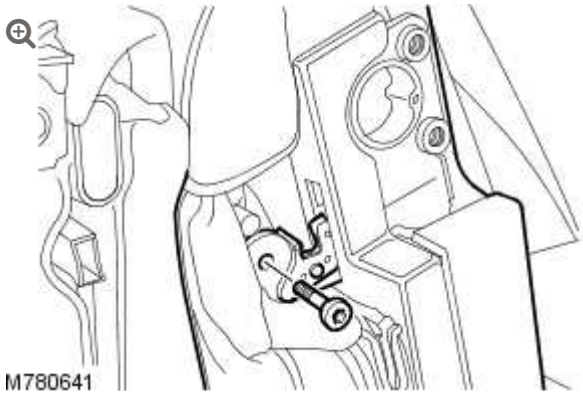

Remove the rear seat armrest.

- Remove the bolt.
- Reposition the rear seat armrest from the rear seat armrest hinge.

12.

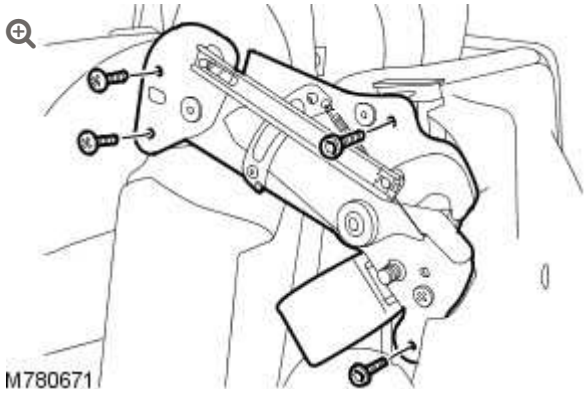

Remove the rear seat backrest inner hinge.

- Remove the 4 bolts.
- Discard the 2 lower bolts.

13.

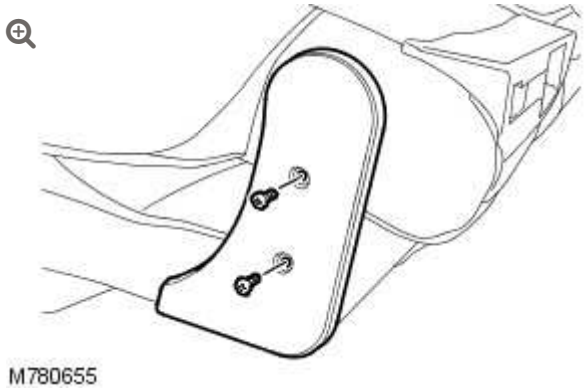

Remove the rear seat backrest outer hinge cover.

- Remove the 2 screws.

14.

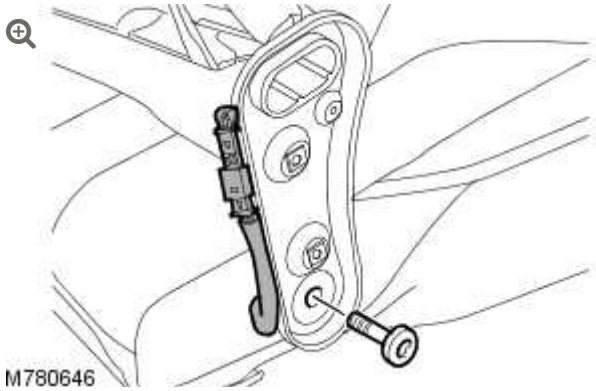

Remove the rear seat backrest from the rear seat base.

- Remove the rear seat backrest outer hinge bolt.

15. Remove the rear seat backrest hinge wiring harness clip.
    - Remove the 2 clips.
    - Release the rear seat base wiring harness electrical connector from the rear seat backrest cover.
    - Disconnect the rear seat base wiring harness electrical connector.

16.

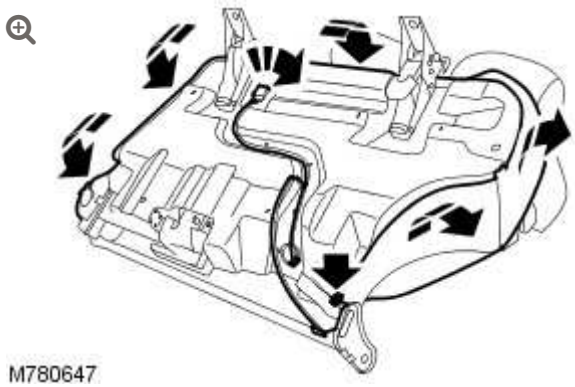

Release the rear seat cushion cover from the rear seat base.

17.

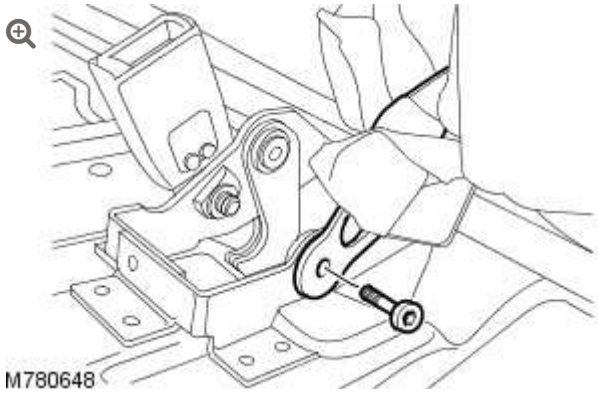

Reposition the safety belt through the rear seat cushion cover and the rear seat cushion.

- Remove and discard the safety belt bolt from the rear seat base.

18.

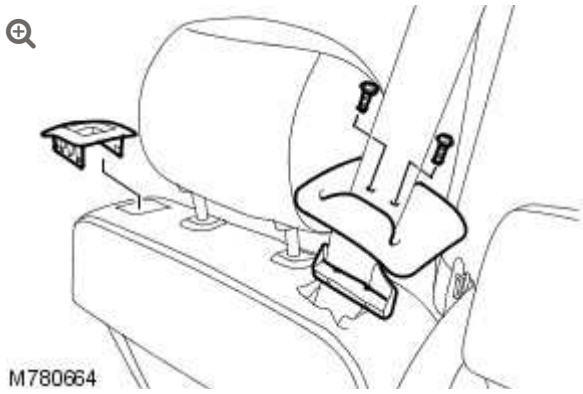

Remove the rear seat backrest cover safety belt trim panel.

- Remove the 2 screws.

19. 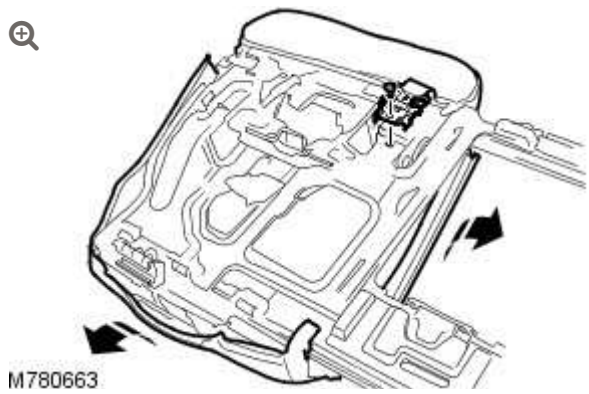

Release the rear seat backrest cover from the rear seat backrest.

20. Remove the rear seat backrest catch trim panel.
    - Carefully release the 4 clips.

21. Reposition the rear seat backrest cushion and cover from the rear seat backrest for access.

22. Reposition the safety belt through the rear seat backrest cushion and cover.

23. 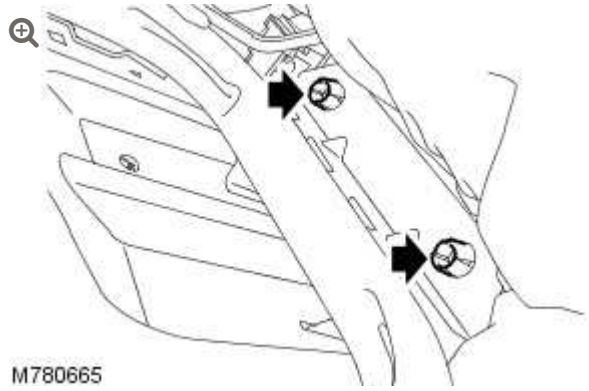

Using a suitable tool, release the head restraint guide tubes.
    - Release the 6 clips.

24. Remove the rear seat backrest cushion and cover from the rear seat backrest.

- Reposition the safety belt.

25. **NOTE:**

> Do not disassemble further if the component is removed for access only.



Remove the rear seat backrest cover from the rear seat backrest cushion.

- Remove and discard the 16 clips from the rear seat backrest cover.

INSTALLATION

1. Install the rear seat backrest cover to the rear seat backrest cushion.
   - Install the 16 new clips to the rear seat backrest cover.
2. Install the rear seat backrest cushion and cover to the rear seat backrest.
   - Reposition the safety belt.

3. Install the head restraint guide tubes.
    - Secure the 6 clips.

4. Reposition the safety belt through the rear seat backrest cushion and cover.

5. Reposition the rear seat backrest cushion and cover to the rear seat backrest.

6. Install the rear seat backrest catch trim panel.
    - Secure the 4 clips.

7. Secure the rear seat backrest cover to the rear seat backrest.

8. Install the rear seat backrest cover safety belt trim panel.
    - Install the 2 screws.

9. Reposition the safety belt through the rear seat cushion cover and the rear seat cushion.
    - Install the new safety belt bolt to the rear seat base and tighten to 31 Nm (23 lb.ft).

10. Secure the rear seat cushion cover to the rear seat base.

11. Install the rear seat backrest hinge wiring harness clip.
    - Secure the 2 clips.
    - Secure the rear seat base wiring harness electrical connector to the rear seat backrest cover.
    - Connect the rear seat base wiring harness electrical connector.

12. Secure the rear seat backrest to the rear seat base.

- Install the rear seat backrest outer hinge bolt and tighten to 45 Nm (33 lb.ft).

13. Install the rear seat backrest outer hinge cover.
    - Install the 2 screws.

14. Install the rear seat backrest inner hinge.
    - Install the 2 upper bolts.
    - Install the 2 new lower bolts.
    - Tighten the bolts to 25 Nm (18 lb.ft).

15. Install the rear seat armrest.
    - Install the bolt.
    - Reposition the rear seat armrest to the rear seat armrest hinge.

16. Secure the rear seat armrest cover to the rear seat backrest.
    - Secure the rear seat armrest cover securing strip.
    - Secure the rear seat armrest cover securing rail.

17. Reposition the rear seat armrest to the original position.
    - Secure the rear seat armrest catch.

18. Install the rear seat base lower trim panel.
    - Install the 6 clips.
    - Reposition the rear seat hinge plates for access.

19. Install the rear seat backrest inner hinge cover.
    - Install the 3 screws.

20. Install the rear seat backrest rear cover.

- Apply a suitable adhesive to the rear seat backrest rear cover.

21. Install the rear seat backrest rear cover inner side trim panel.
    - Secure the 11 inner side trim panel clips to the rear seat backrest cover.
    - Install the screw.
    - Secure the rear seat armrest cover securing strip.

22. Carefully secure the rear seat backrest cover to the upper part of the rear seat frame.

23. Install the rear seat backrest rear cover lower trim panel.
    - Secure the 3 clips.
    - Install the 2 screws.

24. Install the rear seat backrest catch trim panel.
    - Secure the 3 clips.

25. Install the rear seat.
    For additional information, refer to: Rear Seat (501-10, Removal and Installation).

REAR SEAT CUSHION COVER (G899500)

REMOVAL AND INSTALLATION

REMOVAL

1. Remove the LH rear seat.
   For additional information, refer to: Rear Seat (501-10, Removal and Installation).

2. 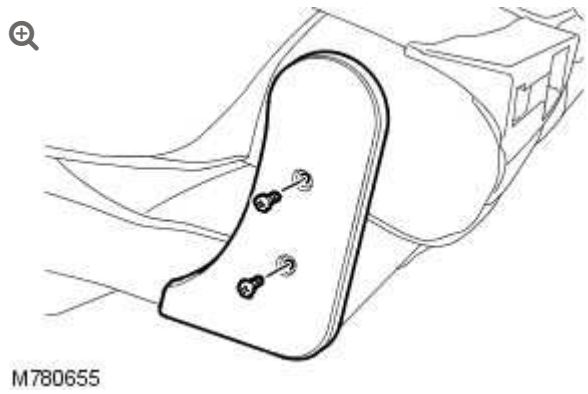

   Remove the rear seat backrest outer hinge cover.
   - Remove the 2 screws.

3.

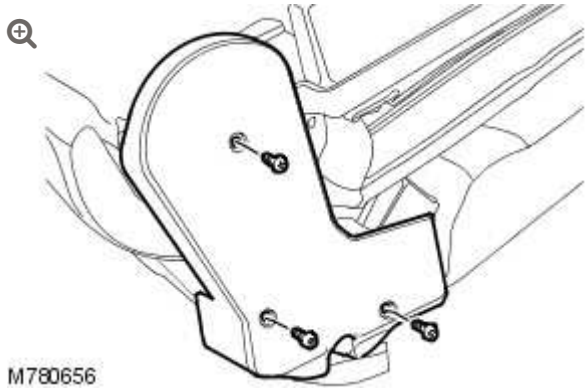

Remove the rear seat backrest inner hinge cover.

- Remove the 3 screws.

4.

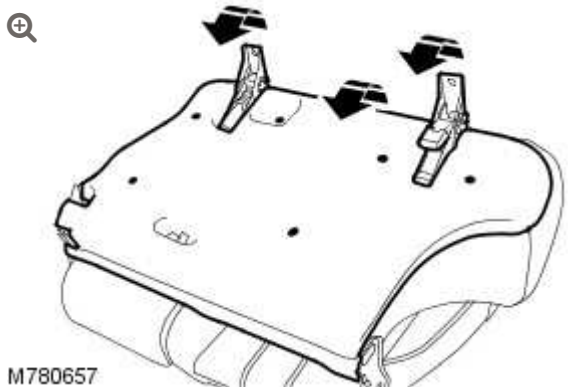

Remove the rear seat base lower trim panel.

- Remove the 6 clips.
- Reposition the rear seat hinge plates for access.

5.

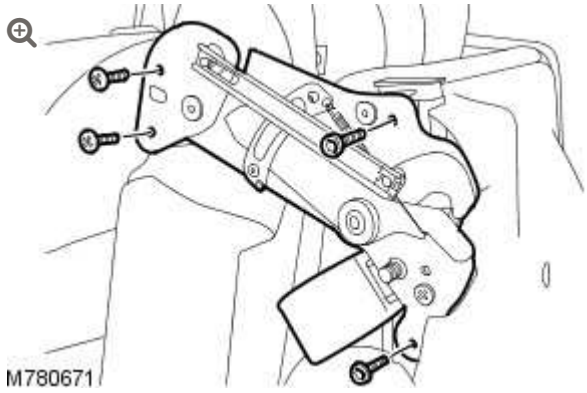

Remove the rear seat backrest inner hinge.

- Remove the 4 bolts.
- Discard the 2 lower bolts.

6.

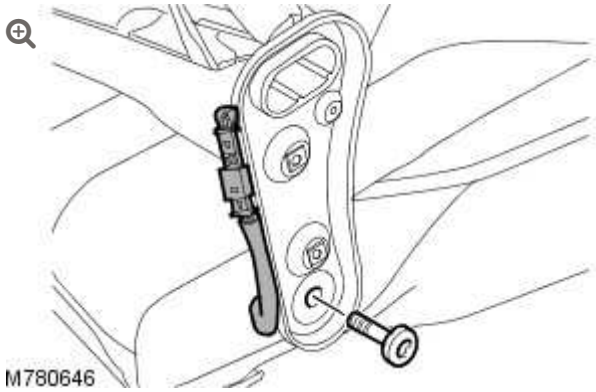

Remove the rear seat backrest from the rear seat base.

- Remove the rear seat backrest outer hinge bolt.

7. Remove the rear seat backrest hinge wiring harness clip.
   - Remove the 2 clips.
   - Release the rear seat base wiring harness electrical connector from the rear seat backrest cover.
   - Disconnect the rear seat base wiring harness electrical connector.

8.

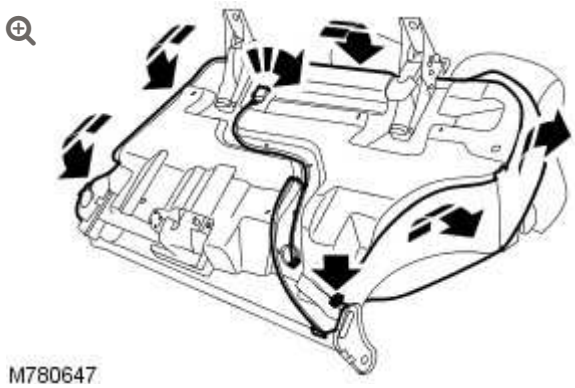

Release the rear seat cushion cover from the rear seat base.

9.

Reposition the rear seat base wiring harness through the rear seat base.

- Release the rear seat base wiring harness electrical connector from the clip.
- Release the 5 wiring harness clips.

10.

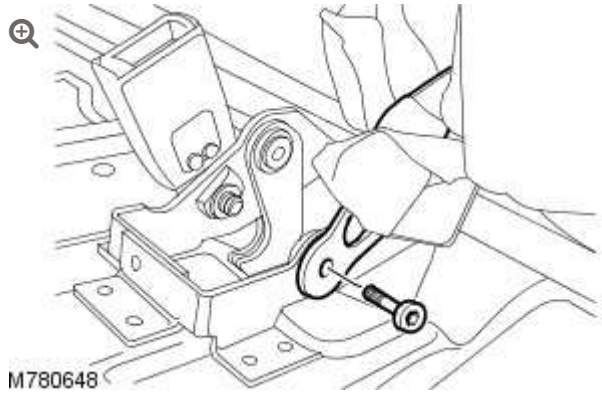

Reposition the safety belt through the rear seat cushion cover and the rear seat cushion.

- Remove and discard the safety belt bolt from the rear seat base.

11.

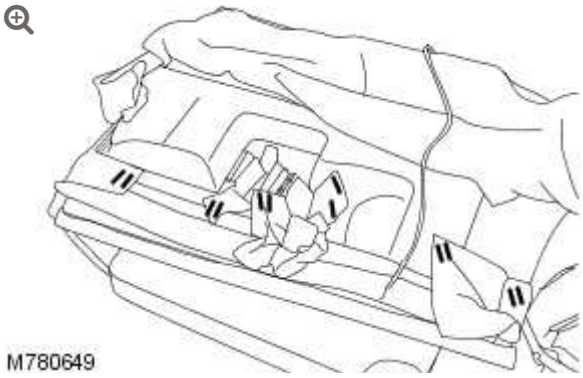

Remove the rear seat cushion cover and the rear seat cushion.

12.

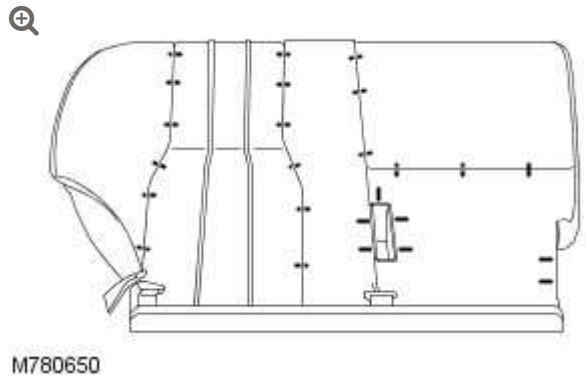

Remove the rear seat cushion cover from the rear seat cushion.

- Remove and discard the 25 rear seat cushion cover clips.

INSTALLATION

1. Install the rear seat cushion cover to the rear seat cushion.
   - Install the 25 new rear seat cushion cover clips.
2. Install the rear seat cushion cover and the rear seat cushion.
3. Reposition the safety belt through the rear seat cushion cover and the rear seat cushion.
   - Install the new safety belt bolt to the rear seat base and tighten to 31 Nm (23 lb.ft).
4. Reposition the rear seat base wiring harness through the rear seat base.
   - Secure the 5 wiring harness clips.
   - Install the rear seat base wiring harness electrical connector to the clip.
5. Secure the rear seat cushion cover to the rear seat base.

6. Install the rear seat backrest hinge wiring harness clip.
   - Install the 2 clips.
   - Connect the rear seat base wiring harness electrical connector.
   - Secure the rear seat base wiring harness electrical connector to the rear seat backrest cover.

7. Install the rear seat backrest to the rear seat base.
   - Install the rear seat backrest outer hinge bolt and tighten to 45Nm (33 lb.ft).

8. Install the rear seat backrest inner hinge.
   - Install the 4 bolts.
   - Install the 2 new lower bolts.
   - Tighten the bolts to 45 Nm (33 lb.ft).

9. Install the rear seat base lower trim panel.
   - Reposition the rear seat hinge plates for access.
   - Install the 6 clips.

10. Install the rear seat backrest inner hinge cover.
    - Install the 3 screws.

11. Install the rear seat backrest outer hinge cover.
    - Install the 2 screws.

12. Install the LH rear seat.
    For additional information, refer to: Rear Seat (501-10, Removal and Installation).

SEATING

SEAT ARMREST (G873659)

REMOVAL AND INSTALLATION

78.10.01	ARMREST ASSEMBLY - FRONT SEAT - RENEW	ALL DERIVATIVES	0.1	USED WITHINS	+

REMOVAL

1.

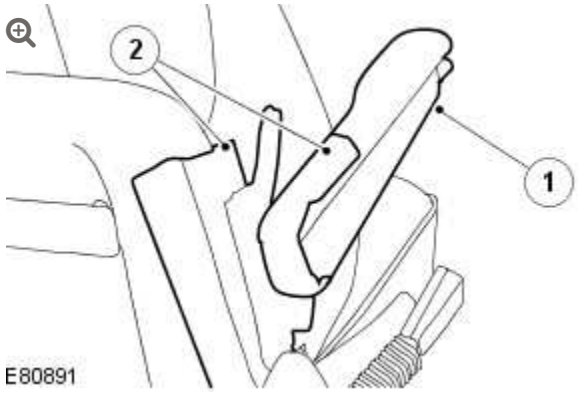

Reposition the front seat for access.

1. Reposition the seat armrest to the central position.
2. Apply suitable protective tape around the seat armrest.

2.

CAUTION:

Make sure no damage is caused to the seat trim when removing the seat armrest.

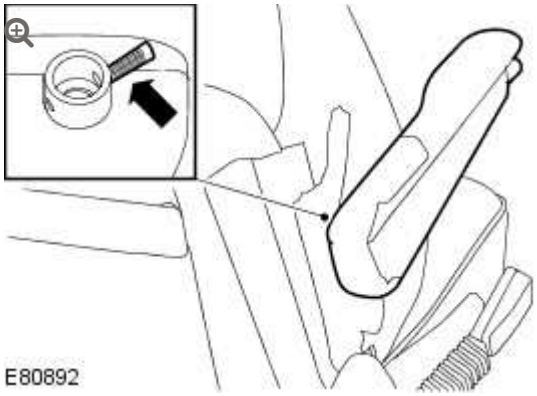

Remove the seat armrest.

- Remove the T27 Torx bolt.

INSTALLATION

1.

CAUTIONS:

- Make sure no damage is caused to the seat trim when installing the seat armrest.
- Make sure the seat armrest bolt is fully seated.

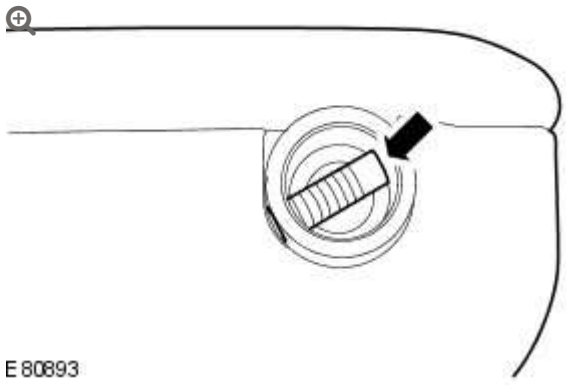

Install the seat armrest.

- Align the seat armrest.
- Install the T27 Torx bolt and tighten to 25 Nm (18 lb.ft).

2. Reposition the front seat to the original position.
   - Remove the suitable protective tape from around the seat armrest.
   - Reposition the seat armrest to the original position.

SEATING

SEAT CONTROL SWITCH

(G873657)

REMOVAL AND INSTALLATION

REMOVAL

NOTE:

Front seat shown removed for clarity.

1. Position the front seat fully forwards.

2. 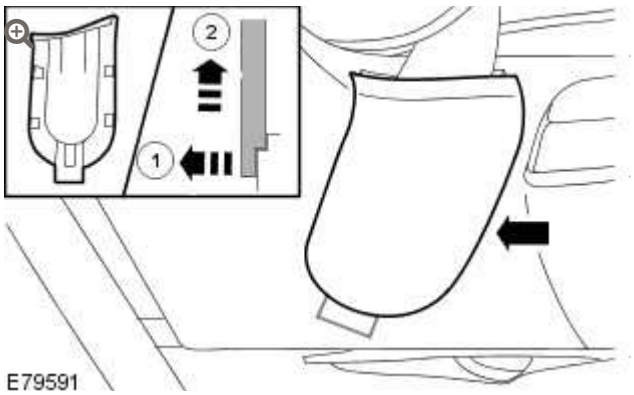

Remove the safety belt lower anchor bolt cover.

1.

Carefully release the clip from behind the front seat base side trim panel.

2. Remove the cover.

---

3. **CAUTION:**

> Release the 2 front clips and the rear clip before releasing the 3 fir tree clips. Failure to follow this instruction may result in damage to the vehicle.

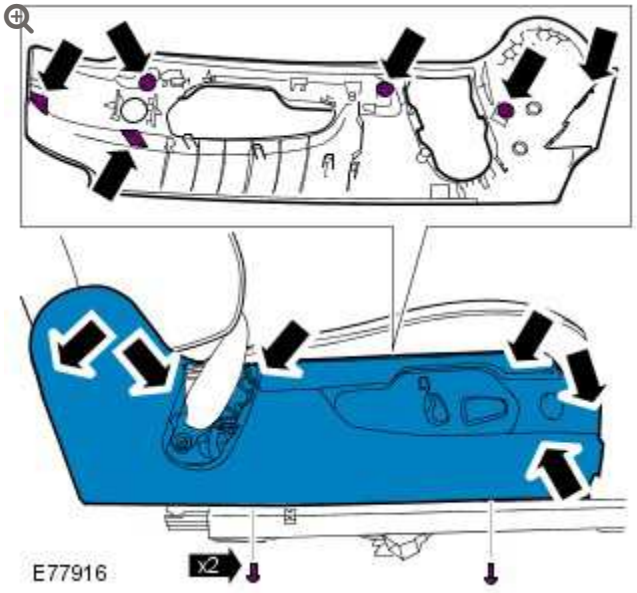

Carefully release the front seat base side trim panel.

- Remove the 2 screws.
- Release the 2 front clips.
- Release the rear clip.
- Release the 3 fir tree clips.

4.

NOTE:

Safety belt shown removed for clarity.

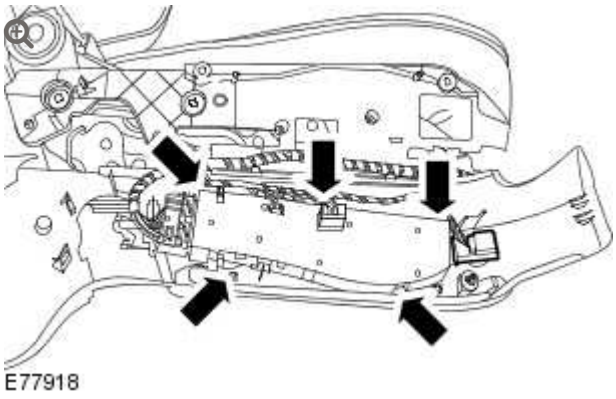

Release the seat control switch.

- Release the 5 clips.

5.

NOTE:

Safety belt shown removed for clarity.

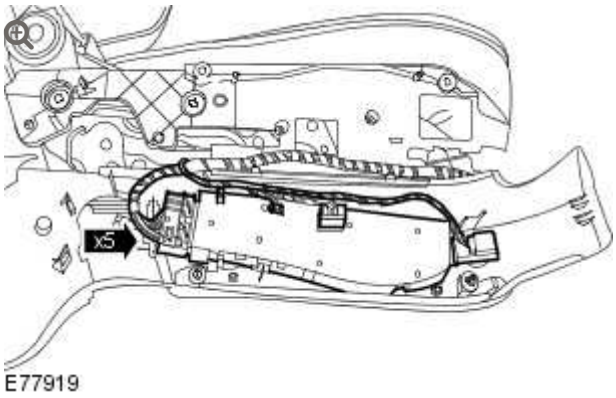

Remove the seat control switch.

- Disconnect the 5 electrical connectors.

INSTALLATION

1. Install the seat control switch.
    - Connect the 5 electrical connectors.
2. Secure the seat control switch.
    - Secure the 5 clips.
3. Secure the front seat base side trim panel.
    - Secure the 6 clips.
    - Install the 2 screws.
4. Install the safety belt lower anchor bolt cover.
5. Reposition the front seat to the original position.

SEATING

DIAGNOSIS AND TESTING

PRINCIPLE OF OPERATION

For a detailed description of the seating systems and operation, refer to the relevant Description and Operation section of the workshop manual. REFER to: Seats (501-10, Description and Operation).

INSPECTION AND VERIFICATION

CAUTION:

Diagnosis by substitution from a donor vehicle is **NOT** acceptable. Substitution of control modules does not guarantee confirmation of a fault and may also cause additional faults in the vehicle being checked and/or the donor vehicle.

NOTES:

- If the control module or a component is suspect and the vehicle remains under manufacturer warranty, refer to the Warranty Policy and Procedures manual (section B1.2), or determine if any prior approval programme is in operation, prior to the installation of a new module/component.
- When performing voltage or resistance tests, always use a digital multimeter accurate to three decimal places, and with an up-to-date calibration certificate. When testing resistance always take the resistance of the digital multimeter leads into account.
- Check and rectify basic faults before beginning diagnostic routines involving pinpoint tests.

1. Verify the customer concern.

2. Visually inspect for obvious signs of mechanical or electrical damage.

Visual Inspection

MECHANICAL	ELECTRICAL
▪ Lumbar/massage air pump(s) ▪ Upper massage cells ▪ Lower massage cells ▪ Seat massage air hoses	▪ Fuses ▪ Wiring harnesses and connectors ▪ Driver seat module ▪ Passenger seat module ▪ Rear left seat module ▪ Rear right seat module ▪ Touch screen ▪ LIN bus ▪ Massage switchpack(s) ▪ Lumbar/massage air pump(s)

MECHANICAL	ELECTRICAL
	▪ Lumbar/massage solenoid(s) ▪ Massage master solenoid(s) ▪ Massage slave solenoid(s)

3. If an obvious cause for an observed or reported concern is found, correct the cause (if possible) before proceeding to the next step.

4. If the cause is not visually evident, verify the symptom and refer to the Symptom Chart, alternatively check for Diagnostic Trouble Codes (DTCs) and refer to the DTC Index.

5. Check DDW for open campaigns. Refer to the corresponding bulletins and SSMs which may be valid for the specific customer complaint and carry out the recommendations as required

SYMPTOM CHART

Lumbar

NOTE:

The Lumbar/Massage solenoid block is fitted with an air exhaust valve that is designed to expel air under operating conditions. This is not an air leak and does not represent a solenoid block failure.

SYMPTOM	POSSIBLE CAUSES	ACTION
All seat functions inoperative	▪ Seat system fault ▪ Seat switchpack power or ground circuit open	▪ Refer to the electrical circuit diagrams and check the seat switchpack power or ground circuit for open circuit, high resistance. Repair the wiring

SYMPTOM	POSSIBLE CAUSES	ACTION
	circuit, high resistance ▪ Seat switchpack internal failure	harness or install a new seat switchpack as necessary
Lumbar inflate inoperative	▪ Seat switchpack internal failure ▪ Lumbar air pump circuit short circuit to ground, short circuit to power, open circuit, high resistance ▪ Air hose blocked ▪ Air hose leaking ▪ Air cell leaking	▪ Refer to the electrical circuit diagrams and check the seat switchpack power or ground circuit for open circuit, high resistance. Repair the wiring harness or install a new seat switchpack as necessary ▪ Refer to the electrical circuit diagrams and check the lumbar air pump circuit for short circuit to ground, sport circuit to power, open circuit, high resistance. Repair the wiring harness or install a new lumbar air pump as necessary ▪ Remove air hose blockage or repair or replace as necessary
Lumbar deflate inoperative	▪ Seat switchpack internal failure ▪ Lumbar solenoid circuit short circuit to ground, short circuit to power, open circuit, high resistance ▪ Air hose blocked	▪ Refer to the electrical circuit diagrams and check the seat switchpack power or ground circuit for open circuit, high resistance. Repair the wiring harness or install a new seat switchpack as necessary ▪ Refer to the electrical circuit diagrams and check the lumbar solenoid circuit for short circuit to ground, sport circuit to power, open circuit, high resistance. Repair the wiring harness or install a new lumbar solenoid as necessary ▪ Remove air hose blockage
Lumbar forward/up/down AND bolster inflate inoperative	▪ Seat switchpack internal failure ▪ Lumbar air pump circuit short	

SYMPTOM	POSSIBLE CAUSES	ACTION
	circuit to ground, short circuit to power, open circuit, high resistance ▪ Air hose blocked ▪ Air hose leaking ▪ Relief valve stuck open	**NOTES:** ▪ Lumbar/massage air pump operation will be inhibited if the motor temperature exceeds 72±4°C (162±7°F). The lumbar/massage air pump will not re-start until 10 minutes after the temperature has decreased below the cut-off temperature. This condition is not a fault. ▪ The Lumbar/Massage solenoid block is fitted with an air exhaust valve that is designed to expel air under operating conditions. This is not an air leak and does not represent a solenoid block failure. ▪ Refer to the electrical circuit diagrams and check the seat switchpack power or ground circuit for open circuit, high resistance. Repair the wiring harness or install a new seat switchpack as necessary ▪ Refer to the electrical circuit diagrams and check the lumbar air pump circuit for short circuit to ground, sport circuit to power, open circuit, high resistance. Repair the wiring harness or install a new lumbar air pump as necessary ▪ Remove air hose blockage or repair or replace as necessary
Lumbar forward inoperative	▪ Seat switchpack internal failure	

SYMPTOM	POSSIBLE CAUSES	ACTION
	▪ Lumbar solenoid circuit short circuit to ground, short circuit to power, open circuit, high resistance ▪ Air hose blocked ▪ Air hose leaking ▪ Air cell leaking	**NOTE:** The Lumbar/Massage solenoid block is fitted with an air exhaust valve that is designed to expel air under operating conditions. This is not an air leak and does not represent a solenoid block failure. ▪ Refer to the electrical circuit diagrams and check the seat switchpack power or ground circuit for open circuit, high resistance. Repair the wiring harness or install a new seat switchpack as necessary ▪ Refer to the electrical circuit diagrams and check the lumbar solenoid circuit for short circuit to ground, sport circuit to power, open circuit, high resistance. Repair the wiring harness or install a new lumbar solenoid as necessary ▪ Remove air hose blockage or repair or replace as necessary
Lumbar rearward inoperative	▪ Seat switchpack internal failure ▪ Lumbar solenoid circuit short circuit to ground, short circuit to power, open circuit, high resistance ▪ Air hose blocked	**NOTE:** The Lumbar/Massage solenoid block is fitted with an air exhaust valve that is designed to expel air under operating conditions. This is not an air leak and does not represent a solenoid block failure.

SYMPTOM	POSSIBLE CAUSES	ACTION
		▪ Refer to the electrical circuit diagrams and check the seat switchpack power or ground circuit for open circuit, high resistance. Repair the wiring harness or install a new seat switchpack as necessary ▪ Refer to the electrical circuit diagrams and check the lumbar solenoid circuit for short circuit to ground, sport circuit to power, open circuit, high resistance. Repair the wiring harness or install a new lumbar air pump as necessary ▪ Remove air hose blockage
Lumbar up inoperative	▪ Seat switchpack internal failure ▪ Lumbar solenoid circuit short circuit to ground, short circuit to power, open circuit, high resistance ▪ Air hose blocked ▪ Air hose leaking ▪ Air cell leaking	**NOTE:** The Lumbar/Massage solenoid block is fitted with an air exhaust valve that is designed to expel air under operating conditions. This is not an air leak and does not represent a solenoid block failure. ▪ Refer to the electrical circuit diagrams and check the seat switchpack power or ground circuit for open circuit, high resistance. Repair the wiring harness or install a new seat switchpack as necessary ▪ Refer to the electrical circuit diagrams and check the lumbar solenoid circuit for short circuit to ground, sport circuit to power, open circuit, high resistance. Repair the wiring harness or install a new lumbar solenoid as necessary

SYMPTOM	POSSIBLE CAUSES	ACTION
		▪ Remove air hose blockage or repair or replace as necessary
Lumbar down inoperative	▪ Seat switchpack internal failure ▪ Lumbar solenoid circuit short circuit to ground, short circuit to power, open circuit, high resistance ▪ Air hose blocked ▪ Air hose leaking ▪ Air cell leaking	**NOTE:** The Lumbar/Massage solenoid block is fitted with an air exhaust valve that is designed to expel air under operating conditions. This is not an air leak and does not represent a solenoid block failure. ▪ Refer to the electrical circuit diagrams and check the seat switchpack power or ground circuit for open circuit, high resistance. Repair the wiring harness or install a new seat switchpack as necessary ▪ Refer to the electrical circuit diagrams and check the lumbar solenoid circuit for short circuit to ground, sport circuit to power, open circuit, high resistance. Repair the wiring harness or install a new lumbar solenoid as necessary ▪ Remove air hose blockage or repair or replace as necessary
Bolster inflate inoperative	▪ Seat switchpack internal failure ▪ Lumbar air pump circuit short circuit to ground, short circuit to power, open circuit, high resistance	

SYMPTOM	POSSIBLE CAUSES	ACTION
	▪ Air hoses blocked/leaking ▪ Air cells leaking	**NOTE:** The Lumbar/Massage solenoid block is fitted with an air exhaust valve that is designed to expel air under operating conditions. This is not an air leak and does not represent a solenoid block failure. ▪ Refer to the electrical circuit diagrams and check the seat switchpack power or ground circuit for open circuit, high resistance. Repair the wiring harness or install a new seat switchpack as necessary ▪ Refer to the electrical circuit diagrams and check the lumbar air pump circuit for short circuit to ground, sport circuit to power, open circuit, high resistance. Repair the wiring harness or install a new lumbar air pump as necessary ▪ Remove air hose blockage or repair or replace as necessary
Bolster deflate inoperative	▪ Seat switchpack internal failure ▪ Bolster solenoid circuit short circuit to ground, short circuit to power, open circuit, high resistance ▪ Air hoses blocked	**NOTE:** The Lumbar/Massage solenoid block is fitted with an air exhaust valve that is designed to expel air under operating conditions. This is not an air leak and does not represent a solenoid block failure.

SYMPTOM	POSSIBLE CAUSES	ACTION
		▪ Refer to the electrical circuit diagrams and check the seat switchpack power or ground circuit for open circuit, high resistance. Repair the wiring harness or install a new seat switchpack as necessary ▪ Refer to the electrical circuit diagrams and check the lumbar solenoid circuit for short circuit to ground, sport circuit to power, open circuit, high resistance. Repair the wiring harness or install a new lumbar solenoid as necessary ▪ Remove air hose blockage

ON DEMAND SELF TEST (ODST)

The On Demand Self Test (ODST) is performed using the Jaguar Land Rover approved diagnostic equipment as follows:

1. Begin a Diagnostic session

2. Select 'Body'

3. Select 'Seating'

4. Select the relevant seat

5. Run the On Demand Self Test (ODST) application

DTC INDEX

For a list of Diagnostic Trouble Codes (DTCs) that could be logged on this vehicle, please refer to Section 100-00. REFER to: Diagnostic Trouble Code (DTC) Index - DTC: Driver/Passenger Seat Module (DSM/PSM) (100-00, Description and Operation).

SEATING

SEAT SMOOTHING (G1774019)

GENERAL PROCEDURES

CHECK

WARNINGS:

- Make sure that the steamer is in the OFF position before connecting or disconnecting from the electrical outlet.
- Do not use another high wattage device on the same electrical circuit.
- If the use of an extension cord is absolutely necessary, the cord must be rated at a minimum of 10 amps.
- To avoid the risk of electrical shock, check the condition of the power cord and the steamer before use.
- Make sure that the steamer is disconnected from the electrical outlet before filling or emptying the water reservoir.
- The steamer must only be used and placed on its stand on a stable surface.
- To prevent injury such as burns, take care whilst using the steamer. Avoid coming into contact with the hot surface of the steamer and do not direct steam toward any persons.
- The steamer must ALWAYS be switched off when not in use or left unattended.
- Do not allow the power cord to come into contact with the hot surface of the steamer.

CAUTIONS:

- Protect the surrounding paintwork to avoid damage.
- Protect the paintwork during this operation.
- Do not use any additives in the steamer. Damage to the steamer or the seat cover can result if used.

NOTE:

Some variation in the illustrations may occur, but the essential information is always correct.

1. **NOTE:**

   The seat smoothing process should be used to improve all natural leather characteristics before the seat cover is replaced. Use the below examples and the seat cover inspection procedure as a guide for when to use the seat smoothing process.

   Refer to: Seat Cover Inspection (501-10 Seating, Description and Operation).

2. **NOTE:**

   The example in the illustraion shows the natural characteristics of leather that **can** be improved using the seat smoothing process.



3.

NOTE:

The example in the illustraion shows the natural characteristics of leather that **can** be improved using the seat smoothing process.



4.

NOTE:

The example in the illustraion shows the natural characteristics of leather that **can** be improved using the seat smoothing process.



5.

NOTE:

The example in the illustraion shows the natural characteristics of leather that **can** be improved using the seat smoothing process.

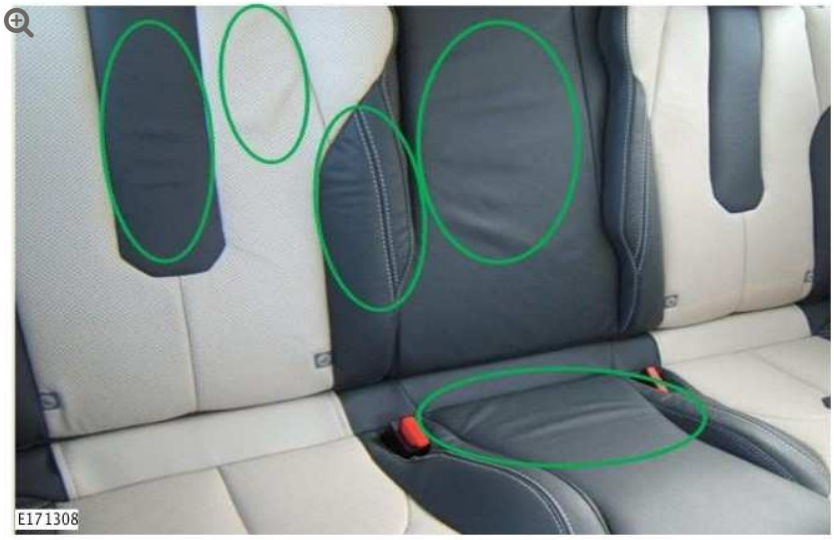

6.

NOTE:

The example in the illustraion shows the natural characteristics of leather that **can** be improved using the seat smoothing process.



7.

NOTE:

The example in the illustraion shows the natural characteristics of leather that **can not** be improved using the seat smoothing process.



8.

NOTE:

The example in the illustraion shows the natural characteristics of leather that **can not** be improved using the seat smoothing process.



9.

CAUTIONS:

- Steam the leather cushions evenly and progressively. Do not use excessive force.
- Take care not to damage the leather whilst steaming into the corners.
- Do not hold the steamer in one place for longer than 10 seconds, as this will burn the leather and damage the covers.



E166054

SEATING

DESCRIPTION AND OPERATION

LEATHER SEAT COVERS

Leather is a natural product, therefore it bears natural characteristics, such as grain variations, growth & bush marks. These non-weakening marks show the true nature of the hide and are the hallmarks of Leather. In order to maintain the beauty of the vehicles natural leather upholstery it requires regular cleaning, which if neglected, may cause deterioration. Where dust and dirt are allowed to accumulate and become ingrained in the surface of the leather, the upholstery may become permanently damaged.

Light coloured upholstery can be particularly susceptible to soiling and staining and care should be taken to ensure that where there is evidence of any soiling or staining on the upholstery then this should be cleaned immediately using the Jaguar/Land Rover approved products, failure to do this could lead to the stain becoming permanent, this applies to all leather upholstery and is not colour specific.

Leather trimmed seats will naturally exhibit areas of creasing and wrinkling over a period of time and is a normal characteristic as the leather ages.

Particular care should be taken where there is evidence of soiling or staining on the leather, this should be cleaned immediately. Failure to do this could lead to the stain becoming permanent.

Particular care should be taken to prevent damage from studs, zips and buckles.

SEAT COVER REPLACEMENT

Rest of World Vehicles

Refererence should be made to the list of documents below before any seat cover is replaced in Jaguar Land Rover warranty.

- Global Warranty Policy and Procedure Manual on TOPIx.
- Leather Seat Cover Finessing Process on the Excellence Academy.
- Seat Smoothing Procedure in the workshop manual.

All seat covers that are replaced should be done using all available TOPIx guides. Any damage that has been done to other components during the seat cover replacement process will not be paid under warranty.

NAS vehicles

Refererence should be made to the list of documents below before any seat cover is replaced in Jaguar Land Rover warranty.

- Warranty Policy and Procedure Manual.
- Leather Seat Cover Finessing Process on the Excellence Academy.
- Seat Smoothing Procedure in the workshop manual.

All seat covers that are replaced should be done using all available TOPIx guides. Any damage that has been done to other components

during the seat cover replacement process will not be paid under warranty.

LEATHER SEAT COVERS MANUFACTURING DEFECT GUIDELINES

Examples of Damage to Seat Cover

Below are some examples of damage that would not be accepted under the terms of the Jaguar Land Rover warranty agreement. Please note: these are examples only and do not represent all warrantable/non warrantable customer concerns.

The examples below show damage such as cuts, tears and puncture holes. These types of damage would not be accepted under the terms of the Jaguar Land Rover warranty agreement (unless the seat cover damage was noted on the Pre Delivery Inspection).



E167177

The examples below show damage such as scratches, scrapes, snags and indentation marks. These types of damage would not be accepted under the terms of the Jaguar Land Rover warranty agreement (unless the seat cover damage was noted on the Pre Delivery Inspection).



E167178

The examples below show damage such as pen marks and visual surface burns. These types of damage would not be accepted under the terms of the Jaguar Land Rover warranty agreement (unless the seat cover damage was noted on the Pre Delivery Inspection).



E167179

Examples of Natural Characteristics of Leather

Below are some examples of the natural characteristics of leather which will mature with use and ageing. These examples of the natural charcteristics of leather are not manufacturing defects. Improvements in the seat cover can be achieved by following the smoothing process.

The examples below show the natural characteristics of leather on the front seat cushion. These types of natural characteristics of leather would not be accepted under the terms of the Jaguar Land Rover warranty agreement.



E167180

The examples below show the natural characteristics of leather on the front seat back and squab bolsters. These types of natural characteristics of leather would not be accepted under the terms of the Jaguar Land Rover warranty agreement.



E167181

The examples below show the natural characteristics of leather on the rear seat. These types of natural characteristics of leather would not be accepted under the terms of the Jaguar Land Rover warranty agreement.



Examples of Soiling, Stains and Incorrect Cleaning

Below are some examples of soiling, stains and incorrect cleaning that would not be accepted under the terms of the Jaguar Land Rover warranty agreement. Please note: these are examples only and do not represent all warrantable/non warrantable customer concerns.

The example below shows soiling on the seat cover. This type of soiling would not be accepted under the terms of the Jaguar Land Rover warranty agreement.



E167183

The examples below show staining on the seat cover. These type of staining would not be accepted under the terms of the Jaguar Land Rover warranty agreement.



E167184

The example below shows incorrect cleaning on the seat cover. This type of incorrect cleaning would not be accepted under the terms of the Jaguar Land Rover warranty agreement.



E167185

Examples of Excessive Wear

Below are some examples of excessive wear on the seat covers that is often caused by studs, zips and buckles. This would not be accepted under the terms of the Jaguar Land Rover warranty agreement. Please note: these are examples only and do not represent all warrantable/non warrantable customer concerns.

The examples below show excessive wear on the seat covers, when studs, zips and buckles are in contact with the seat cover while entering and exiting the vehicle. These types of wear would not be accepted under the terms of the Jaguar Land Rover warranty agreement.

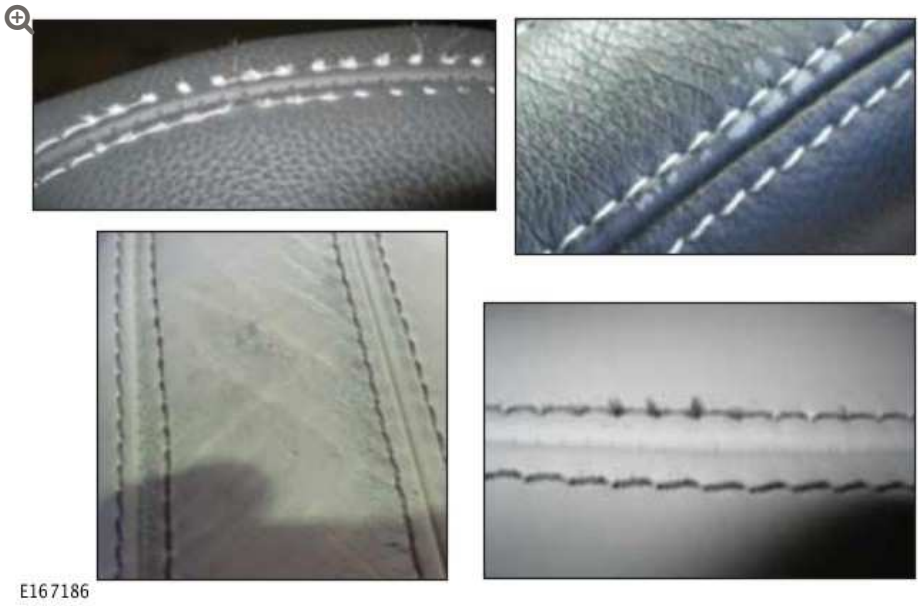

Seat Cover Replacement

Below are some examples of issues on the seat covers after they have been replaced. This would not be accepted under the terms of the Jaguar Land Rover warranty agreement. Please note: these are examples only and do not represent all warrantable/non warrantable customer concerns.

The example below shows excessive wrinkling or looseness due to incorrect fitment of the front seat covers. These types of incorrect

fitment would not be accepted under the terms of the Jaguar Land Rover warranty agreement.



E167187

The example below shows excessive wrinkling or looseness due to incorrect fitment of the rear seat covers.This type of incorrect fitment would not be accepted under the terms of the Jaguar Land Rover warranty agreement.



2012.0 RANGE ROVER (LM), 501-10

SEATING

DESCRIPTION AND OPERATION

COMPONENT LOCATION

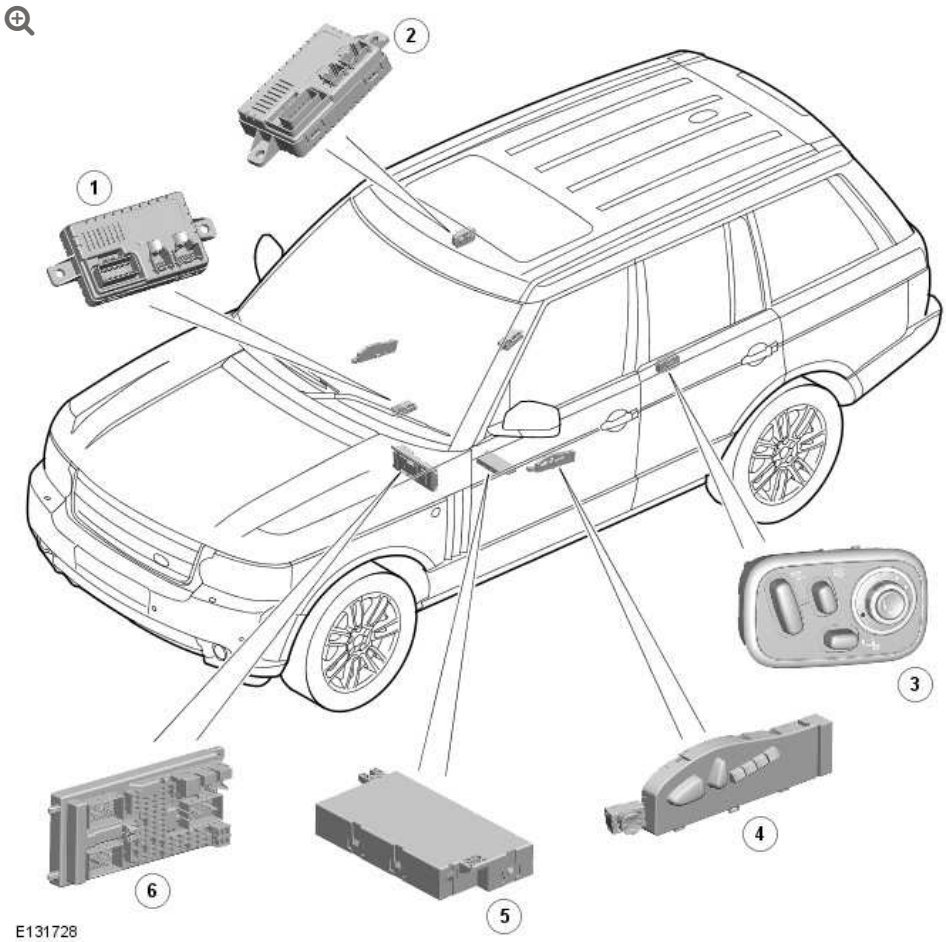

ITEM	DESCRIPTION
1	Front seat climate module (where fitted)
2	Rear seat climate module (where fitted)

ITEM	DESCRIPTION
3	Rear seat switch pack (2 off)
4	Seat switch pack (2 off)
5	Front seat memory control module (2 off)
6	Central Junction Box (CJB)

OVERVIEW

LEATHER SEAT COVERS

Leather is a natural product, therefore it bears natural characteristics, such as grain variations, growth & bush marks. These non-weakening marks show the true nature of the hide and are the hallmarks of Leather. In order to maintain the beauty of the vehicles natural Leather upholstery it requires regular cleaning, which if neglected, may cause deterioration. Where dust and dirt are allowed to accumulate and become ingrained in the surface of the Leather, the upholstery may become permanently damaged.

Light coloured upholstery can be particularly susceptible to soiling and staining and care should be taken to ensure that where there is evidence of any soiling or staining on the upholstery then this should be cleaned immediately using the Jaguar/Land Rover approved products, failure to do this could lead to the stain becoming permanent, this applies to all leather upholstery and is not colour specific.

Leather trimmed seats will naturally exhibit areas of creasing and wrinkling over a period of time and is a normal characteristic as the Leather ages.

Particular care should be taken where there is evidence of soiling or staining on the leather, this should be cleaned immediately. Failure to do this could lead to the stain becoming permanent.

Particular care should be taken to prevent damage from studs, zips and buckles.

NOTES:

- Please refer to Leather care label attached to seats for more information.
- Creasing and wrinkling does not represent a manufacturing defect.
- Damage from studs, zips and buckles do not represent manufacturing defects.
- Use only Jaguar/Land Rover approved products in accordance with the instructions for use.

GENERAL

Two variants of driver and passenger front seats are available:

- Low line seat with 8-way adjustment
- High line seat with 10-way adjustment.



ITEM	DESCRIPTION
A	Low line front seat
B	High line front seat

The front seats are fitted with the seat belt bolted to the seat rail. The frames are common to both variants and are equipped with the following:

- Seat control switches
- Cushion front height adjustment
- Cushion rear height adjustment
- Cushion front tilt adjustment (high line only)
- Backrest adjustment

- Head restraint adjustment
- Lumbar adjustment
- Seat forward and rearward adjustment
- Side air bag module
- Backrest heating
- Cushion heating
- Seat climatic control (available as an option on the high line version).

WARNING:

Prior to removal of the front seats and before disconnecting the front seat wiring harness electrical connectors (which includes the side air bag module electrical connectors), the battery ground cable should be disconnected and a period of at least 1 minute allowed to elapse. The same amount of care should be taken when handling and storing the front seats, as would be taken when handling and storing air bag modules.

Both variants of the front seats are fitted with a manually adjustable folding armrest on the inboard side of the seat. The memory recall functions are also available on higher specification vehicles.

The driver and passenger front seats, although almost identical, have some unique components:

- The front driver seat has a seat position sensor
- The front passenger seat on North American Specification (NAS) vehicles have a seat occupant classification system
- The front passenger seat on Rest Of the World (ROW) vehicles, except Australia, has a seat occupancy detection system.

The occupant classification system and the seat occupancy detection system both form an integral part of the Supplemental Restraint System (SRS).
For additional information, refer to: Air Bag and Safety Belt Pretensioner Supplemental Restraint System (SRS) (501-20B Supplemental Restraint System, Description and Operation).

The rear bench seats are designed to fold forward to increase the rear load space. a 60:40 split gives the owner increased flexibility when loading the vehicle with large objects. All rear seats are equipped with 3-point seat belts and adjustable head restraints. The seats can also be fitted with seat cushion heaters in both outboard seats, climate control and also the following electric adjustment:

- Backrest adjustment
- Lumbar support adjustment.



INTEGRATED WHIPLASH REDUCTION SYSTEM

The integrated whiplash reduction system is incorporated into the backrest of the front seats. Head restraint forward positioning is activated by the natural occupant rearward displacement during low

speed rear impacts. The head restraint forward positioning is achieved by 10.8 degrees maximum movement of an integral seat deployment paddle.

FRONT SEAT CONTROLS

NOTE:

Hi-line version shown, lo-line similar.

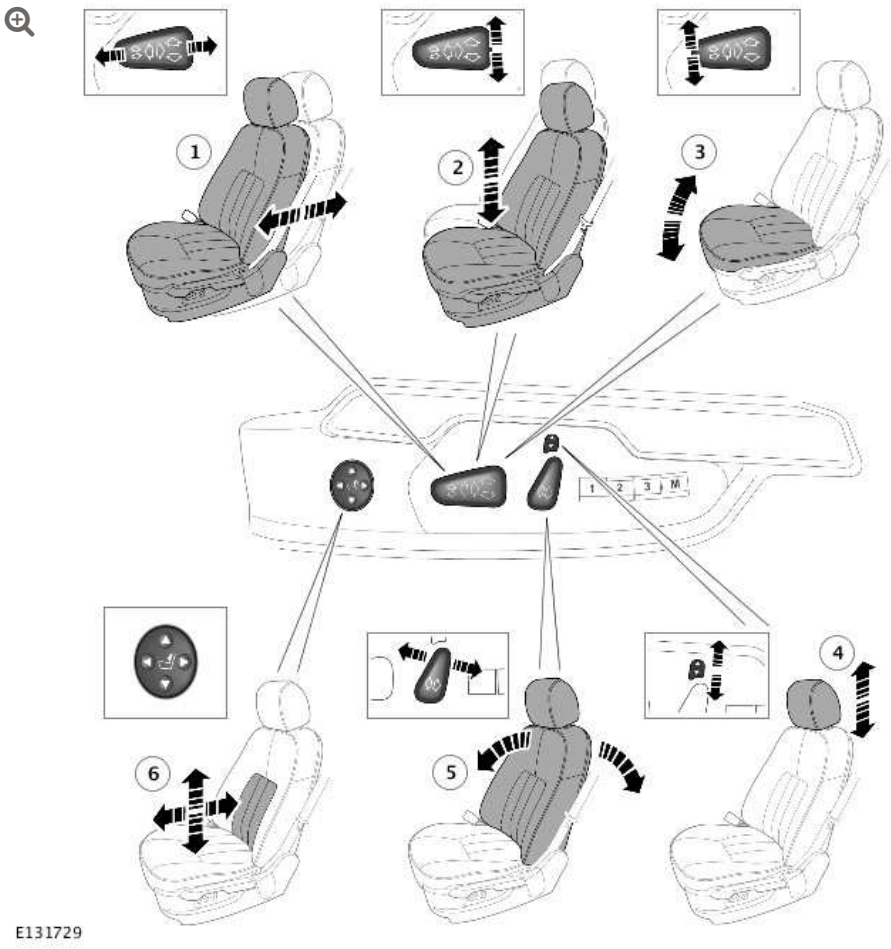

ITEM	DESCRIPTION
1	Forward and back adjustment
2	Height adjustment
3	Cushion angle adjustment

ITEM	DESCRIPTION
4	Headrest adjustment
5	Backrest adjustment
6	Lumbar support adjustment

The switch pack is mounted on the seat valance of the driver and passenger seats and provides movement in the following axis:

- Seat forward/rearward adjustment
- Seat height adjustment
- Seat angle adjustment
- Backrest angle adjustment
- Head restraint height adjustment (electric only on hi-line - manual on lo-line)

Electric adjustment of the seat position can be carried out at any time, having priority over memory recall. For more information regarding seat operation, refer to the owner's handbook.

FRONT SEATS

On seats with the memory function, seat position is monitored by the seat memory control module using Hall sensors incorporated into the motors. Seat memory is standard on the driver's seat and optional on the passenger seat. Each seat memory can be configured for 3 memory positions, which are set using the seat memory switch and stored in the seat memory control module.

The switches for electrically adjusting the seats are located in the seat switch pack on the seat valance. The seat memory control module is located under the seat and controls the movement of the seat via hard-wired connections to the motors.

On passenger seats without the memory function, the seat switch pack is connected directly to the seat motors.

SEAT MOTORS

The seat motors are permanent magnet motors. Two pins within the seat switch pack control the motors. Both pins are connected to ground. Operating a switch in one direction will apply voltage to that pin while the other pin remains connected to ground. Operating the switch in the opposite direction reverses power and ground to the motor allowing the motor to run in the opposite direction.

The seats can be manually adjusted at any time. Positioning is interrupted if manual adjustment is required during automatic adjustment (memory recall). The manual adjustment is not effective before the switch is operated again.

Due to the sequential activation of the drive motors, the switch requests are prioritised in the following order:

- Forward/rearward adjustment
- Backrest
- Height
- Angle
- Head restraint
- Backrest head
- Steering column angle
- Steering column forward/rearward adjustment.

HEATED FRONT SEATS



ITEM	DESCRIPTION
1	Seat back heater
2	Seat cushion heater
3	Seat back climate control motor (optional on high line variants)
4	Seat cushion climate control motor (optional on high line variants)

The seat heater elements are located in the seat cushion and backrest. The cushion and backrest heater elements are wired in series. The cushion heater element has an input feed from the temperature control unit and an output to the backrest heater element, which outputs to ground.

The seat heaters are thermostatically controlled and will operate intermittently to maintain a predetermined temperature. The

indicators in the switches will remain illuminated until the heaters are either manually turned off, or the starter switch is turned off.

Feedback of the seat temperature is via a NTC (negative temperature coefficient) sensor within the seat cushion. The resistance of this sensor changes with the temperature of the seat cushion allowing the ATC (automatic temperature control) module to raise or lower the voltage to the seat heater elements to raise or lower their temperature.

An ignition feed is supplied to each sensor via the relevant seat heater switch.

Operation of the heated seats is controlled by the ATC module. Two push-button switches are mounted in the ATC module panel. Each switch has 2 integral Light Emitting Diodes (LED) to display the level of heating selected.

CLIMATE FRONT SEATS

Front Seat Heating/Climate Controls

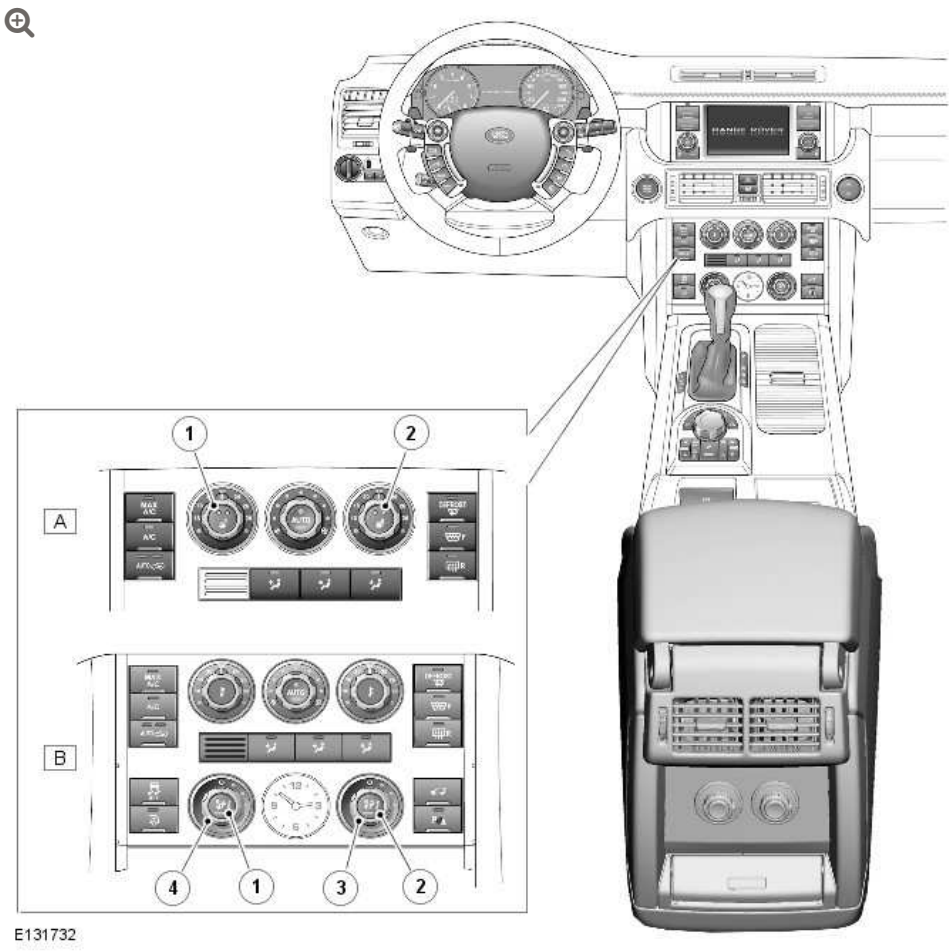

ITEM	DESCRIPTION
A	Lo-line and hi-line variants with heated front seats
B	Hi-line variant with heated front seats and climatic control option
1	LH front seat heater switch
2	RH front seat heater switch
3	RH seat climate rotary control
4	LH seat climate rotary control

High specification vehicles are fitted with climatic seats, which are able to deliver heating and cooling to the front seat occupants. Vehicles fitted with climatic seats feature 2 additional rotary controllers mounted in the ATC module switch pack, adjacent to the clock. The rotary controllers are used to select cooling and heating. Three levels of cooling and heating are available, dependant on the

degree of controller rotation. The center of the controller is pressed once to ventilate both the seat back and cushion (both indicators on the switch will illuminate). A second press of the switch will ventilate the seat back rest only (the cushion indicator will extinguish).

Front Seat Climate Control Module

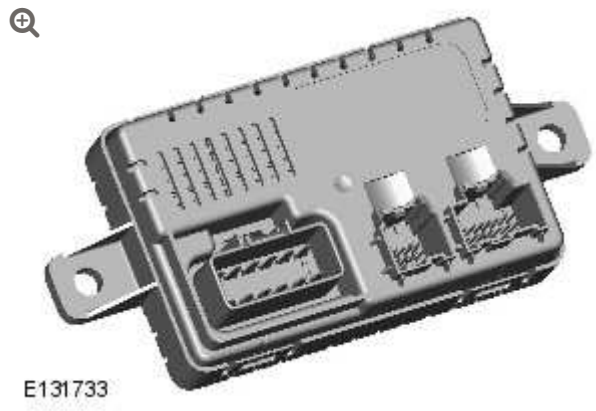

ITEM	DESCRIPTION

NOTES:

- If climatic seats are fitted, heated seat switches are not featured on the ATC module control panel. They are located in the lower panel, either side of the clock.
- The ATC module does not control any aspect of climatic seat operation.

The controlling software for the climatic seats is contained within a front seat climate module mounted on the floorpan, below the front passenger seat. When a temperature selection is made through either of the rotary seat climate controllers, the ATC module switchpack provides a medium speed CAN (controller area network) bus message to the climate module. The climate module interprets

the medium speed CAN bus message as a temperature value and attempts to heat or cool the seat accordingly.

Both climatic front seats contain two Peltier cells; one in the cushion, one in the backrest. The Peltier cells are able to deliver heating and cooling based on a voltage provided by the climate module. Each seat also contains a fan, which blows air over the Peltier cells to distribute heating or cooling throughout the seat. The Peltier effect occurs when an electrical current is passed through a junction formed by two dissimilar conductors, creating a heat pump. A heat pump absorbs heat from one side of the system, causing it to cool, and then transfers the heat to the other side, causing it to warm. The cell is capable of cooling the incoming air by approximately 8°C (12.4°F), which means that temperature output will depend on the ambient temperature inside the vehicle.

The climate module monitors seat heating through a NTC temperature sensor. The temperature sensor is only used to monitor seat heating. Seat cooling is open loop, with no temperature signal provided back to the climate module. When a temperature selection is made through either of the rotary controllers, the ATC module switchpack provides a medium speed CAN bus message to the climate module as a temperature value and attempts to heat or cool the seat accordingly.

Although the rotary control LED (light emitting diode)'s will illuminate if a selection is made when the ignition is in the on mode, the Peltier cells will not operate until the engine is running. After the ignition is in the off mode, the climate module will retain the current temperature settings for approximately 15 minutes. After this period, the seats will be set to ‘off’ when the ignition is in the on mode.

FRONT SEAT LUMBAR ADJUSTMENT



ITEM	DESCRIPTION
1	Bladder
2	Solenoid
3	Pump

Lumbar adjustment is provided by an inflatable cushion with dual air cells and an air pump installed in the seat backrest. A valve block containing solenoid valves controls the inflation of the cushion in relation to switch selections made on a 4-way switch.

The 4-way switch is located on the seat switchpack and controls the operation of the backrest lumbar pump and valve block solenoids.

The lumbar pump inflates cells in a cushion in the backrest via a valve block, which provides extra support for the seat occupant. With no load on the seat it takes approximately 10 seconds to completely inflate the bladder. With a load of 25 kg (55 lb) it takes approximately 15 seconds to inflate the cushion. A pressure cut off switch in the system will operate at 0.12 to 1.93 bar (1.8 to 28 $lbf.in^2$).

SEAT MEMORY CONTROL MODULE

The seat memory control module is located on the underside of the seat frame of the seat it controls. The module relies upon a number of inputs to control various outputs. As with all electronic control modules, the unit needs information regarding the current operating conditions of the engine and other related systems before it can make calculations, which determine the appropriate outputs.

The memory control module can store up to 3 different driver seating, mirror and steering column positions for each key. The passenger seat memory module only stores memory positions relating to the front passenger seat.

All memory values are stored in the non-volatile memory, EEPROM. The current motor positions, which are monitored by the seat memory control module using Hall sensors integral with the motors, are stored in the EEPROM. If a loss of power occurs, when the power supply is restored the current motor positions are recalled from the memory and adopted as the current positions. This allows the relative memory positions to be retained without any need to re-calibrate. The memory control module checks the integrity of all data stored in the EEPROM each time it exit's stand-by mode. In the event that the data is corrupt, the control module adopts the default values for all of the programming options. All memory positions are deemed as invalid and the software will perform as if there are no memory positions stored. Following the procedure for storing a

memory position again will reset the relevant memory and allow full functionality.

MEMORY FUNCTION

Controlled by the driver's seat memory control module, the memory function stores and recalls the position of the driver's seat, the steering column and the exterior mirrors.

The memory recall functions are:

- Forward/backward adjustment
- Seat height
- Seat angle
- Backrest angle
- External mirror adjustment
- Steering column adjustment

The seat, steering column, and exterior mirrors will move to the stored position whenever the relevant memory-recall button in pressed.

The passenger seat memory control module stores and recalls the position of the front passenger seat only. The memory recall function for the passenger seat are as follows:

- Forward/backward adjustment
- Seat height
- Seat angle
- Backrest angle.

For more information regarding the operation of the memory function, refer to the owner's handbook.

NOTE:

Seat, steering column and exterior mirror movement will be halted if any seat adjustment switch (including memory buttons) or the steering column adjustment switch is moved or pressed. To re-start movement of these, the relevant seat memory button will need to be pressed again.

On vehicles with electric rear seats, the power supplies for the seat motors are supplied via the seat memory control modules. Therefore, it is possible for a vehicle to have a non-memory passenger seat but have the seat memory control module located below it to provide power to the rear, passenger side seat motors.

EASY ENTRY/EXIT

The 'Easy Entry/Exit' mode provides automatic movement of the steering column to allow easier entry to or exit from the vehicle.

NOTE:

If the adjustment switch is moved during entry/exit operation, steering column movement will stop.

When the ignition is in the on mode and the vehicle smart key is sensed by the Keyless Vehicle Module (KVM), the steering column, door mirrors and driver's seat will return to the stored position relating to that smart key. If, however, the memorised driver position has been changed (using the seat memory switches or another smart key transmitter), the steering wheel, door mirrors and the seat will move to the new stored memory position.

When the ignition is in the off mode, the steering column will move to the uppermost rake to allow easier exit from the vehicle cabin.

STALL DETECTION

Seat, steering column and mirror motors are deemed to have stalled if there is no change in the inputs that are received from the corresponding feedback sensors while that axis motor is being driven.

If a stall condition is detected, then the drive to that axis motor is cancelled for the remainder of that memory operation (memory recall) or until the switch is re-selected (manual movement).

If the motor movement has stopped due to loss of sensor feedback, either, stall or sensor failure, then that axis motor may be activated again, to move past the stall position, by re-selecting the appropriate switch. This allows control of the motor to be maintained if sensor feedback is lost.

Upon re-selection of movement, if sensor pulses are detected then the motor will continue to be driven until the switch is released or another stall condition is detected. If sensor feedback is not detected then the motor is only driven for 0.5 second and then stops until the switch is released and then pressed again, when a further 0.5 second of activation is permitted, and so on.

For all seat motor and steering column manual movements, whenever a motor is driven and a stall occurs, the seat memory control module records the position at which the stall occurred. If movement occurs beyond a stall position, then that position is erased from the seat control module's memory. This will always allow movement past a previously recorded stall position once movement has been registered beyond that position. This is the case for both manual and memory movement.

REAR SEATS

The switches for electrically adjusting the rear seat backrest are located in the rear door trims. Two versions of the switch are available; one lo-line switch with one switch for rear back rest adjustment and one switch with rear back rest adjustment, lumbar adjustment and a rotary switch for climate control. The switch corresponding to the front passenger seat is fitted with a front seat forward/backwards switch to allow for legroom adjustment.

On vehicles with non-climate, non-electric adjustment heated rear seats, the rear seat heaters are selected by switches on the rear of the floor console and controlled by the ATC module.

On vehicles with electric adjustment, non-climate seats, the rear seat heaters and electrical adjustment are selected by switches located in the door trims.

On vehicles with electrical adjustment and climate control the climate seat controls and electrical adjustment are selected by switches located in the door trims.

On vehicles with electric and climate controlled rear seats, the power supplies for the motors and climate functions are supplied from the front seat memory control module. On vehicles with a passenger front seat without the memory function, the seat memory control module is still fitted to the front passenger seat to supply the power for the passenger side rear seat functions. The seat memory control module is connected to the rear seat control switch and controls the movement of the rear seat via hard-wired connections to the motors.

Rear Seat Control Switch

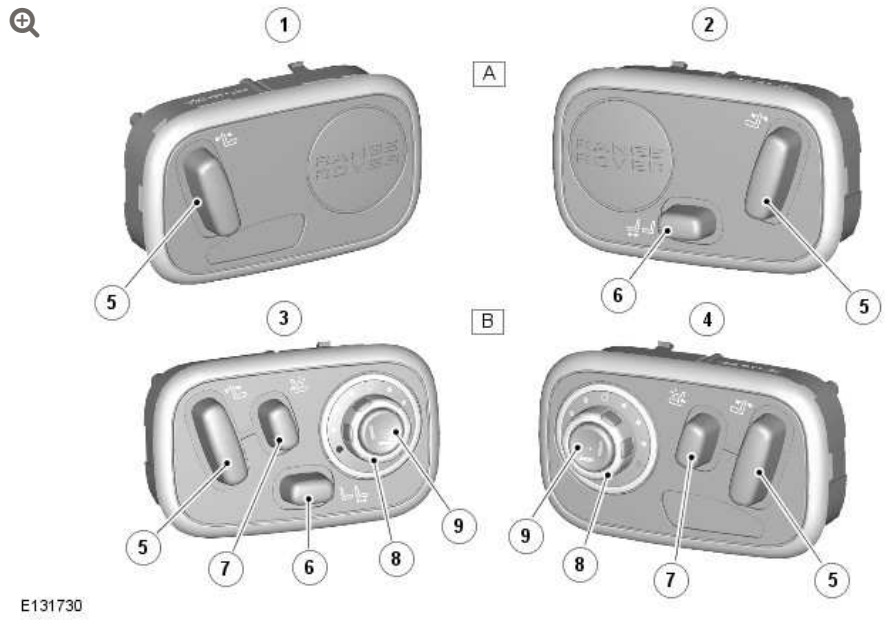

ITEM	DESCRIPTION
A	Lo line Switch (LHD vehicle)
B	Hi line switch (RHD vehicle)
1	LH (driver's side) rear seat control switch
2	RH (passenger side) rear seat control switch
3	LH (passenger side) rear seat control switch
4	RH (driver's side) rear seat control switch
5	Backrest adjustment
6	Front passenger seat - Forward and back adjustment
7	Lumbar support adjustment
8	Climate rotary control
9	Seat heat select switch

HEATED REAR SEATS – NON-CLIMATE SEATS

The rear seat heater elements are located in the outboard seat cushions and backrests. The cushion and backrest heater elements are wired in series. The cushion heater element has an input feed from the floor console mounted climate switch pack and an output to the backrest heater element, which outputs to ground.

The seat heaters are thermostatically controlled and will operate intermittently to maintain a predetermined temperature. The indicators in the switches will remain illuminated until the heaters are either manually turned off, or the ignition is in the off mode.

Feedback of the seat temperature is via a NTC sensor within the seat cushion. The resistance of this sensor changes with the temperature of the seat cushion and a signal relating to the temperature is used to raise or lower the voltage to the seat heater elements to raise or lower their temperature.

Operation of the heated rear seat elements is controlled by the switches on the floor console climate switch pack. Two push-button seat heater switches are mounted in the switch pack. Each switch has 2 integral LED's to display the level of heating selected. The switch can be pressed once to select the seat back rest heater or twice to select both the seat backrest heater and the seat cushion heater. The appropriate LED's will illuminate to show which elements have been selected.

2 Zone Climate Control

The rear seat heater elements are connected directly to the climate switch pack in the floor console. The switchpack receives power supplies from the ATC module and also supplies a rear heat temperature signal to the ATC module. The ATC module uses the temperature signal to regulate the power supplied to seat heater elements and control their temperature.

4 Zone Climate Control

The rear seat heater elements are connected to the climate switchpack in the floor console. The switchpack receives power supplies from the RJB (rear junction box) and it also has a LIN (local interconnect network) connection to rear ATC module which is located under the front passenger seat. The rear ATC module

controls the power supply to the rear seat heater elements via a CAN message to the RJB which regulates the power supplied to the rear seat heater elements and control their temperature.

HEATED/COOLED REAR CLIMATE SEATS

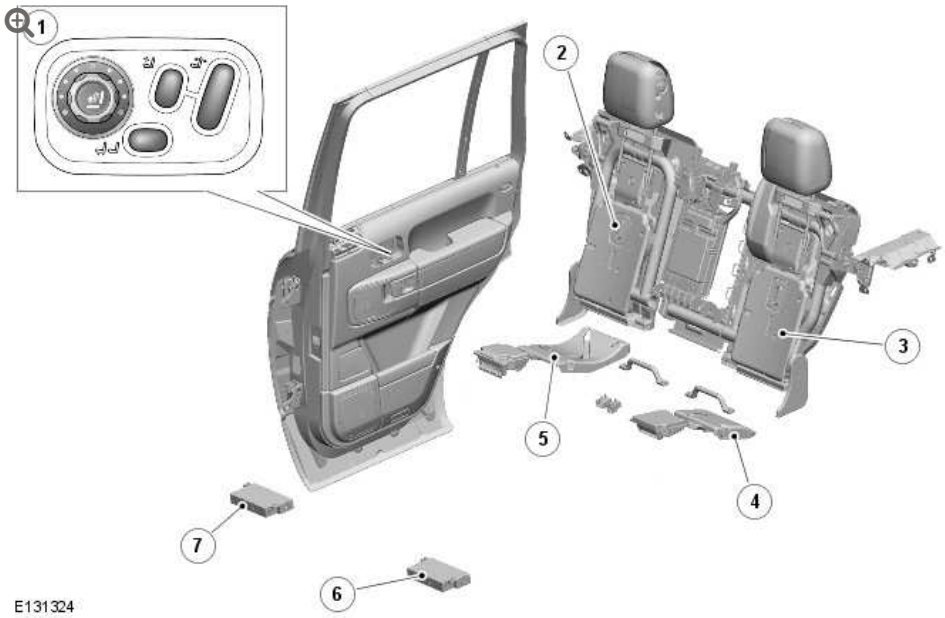

ITEM	DESCRIPTION
1	Rear seat control switch
2	Right Hand (RH) rear seat backrest heater/cooler unit
3	Left Hand (LH) rear seat backrest heater/cooler unit
4	LH rear seat cushion heater/cooler unit
5	RH rear seat cushion heater/cooler unit
6	LH front seat memory control module
7	RH front seat memory control module

Vehicles with rear climate seats have rotary climate controls located in the switch packs mounted in the door trim of each rear door. A rear seat climate module controls the functions of the climate seats. The heating and cooling functions of the climate rear seats operate using 2 Peltier cells; one in the seat cushion and one in the seat

backrest. The climate functions of the seats are only active when the engine is running to preserve battery power.

The controlling software for the rear climate seats is contained with the rear seat climate control module, located under the RH (right-hand) side of the rear seat cushion. The module is connected to other vehicle system on the medium speed CAN bus. The module receives climate rotary switch temperature selections as PWM (pulse width modulation) signals and push button switch selections as ground path completions to the relative front seat memory control module. The front seat memory control module then transmits medium speed CAN bus messages to the rear climate module which then controls the rear seat heating/cooling Peltier cells to achieve the required seat temperature.

Rear Seat Climate Control Module

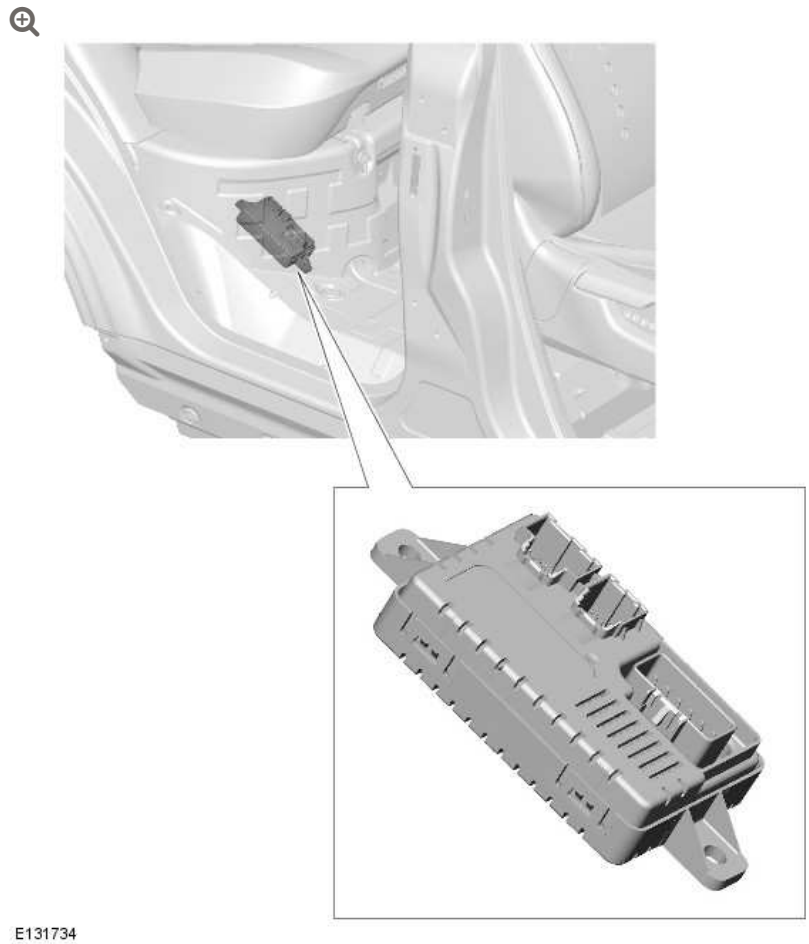

E131734

Both climatic rear seats contain two Peltier cells; one in the cushion, one in the backrest. The Peltier cells are able to deliver heating and cooling based on a voltage provided by the climate module. Each seat also contains a fan, which blows air over the Peltier cells to distribute heating or cooling throughout the seat. The Peltier effect occurs when an electrical current is passed through a junction formed by two dissimilar conductors, creating a heat pump. A heat pump absorbs heat from one side of the system, causing it to cool, and then transfers the heat to the other side, causing it to warm. The cell is capable of cooling the incoming air by approximately 8°C (12.4°F), which means that temperature output will depend on the ambient temperature inside the vehicle.

The climate module monitors seat heating through a NTC temperature sensor. The temperature sensor is only used to monitor seat heating. Seat cooling is open loop, with no temperature signal provided back to the climate module. When a temperature selection is made through either of the rotary controllers, the ATC module switchpack provides a medium speed CAN bus message to the climate module as a temperature value and attempts to heat or cool the seat accordingly.

The rotary control switch LED's will illuminate if a selection is made when the ignition is in the on mode, but the Peltier cells will not operate until the engine is running. After the ignition is in the off mode, the climate module will retain the current temperature settings for approximately 15 minutes. After this period, the seats will be set to ‘off’ when the ignition is in the on mode.

ELECTRIC REAR SEATS

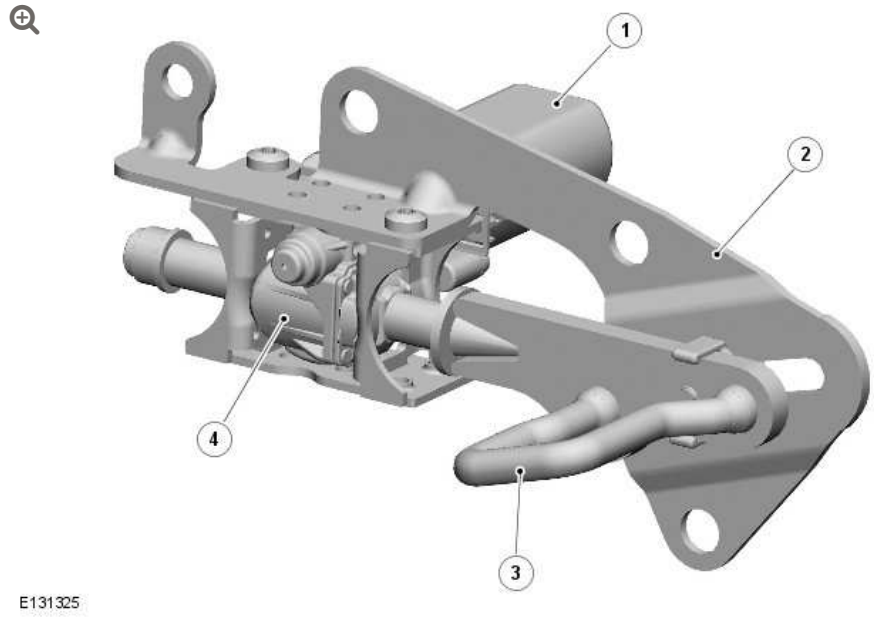

ITEM	DESCRIPTION
1	Seat back adjustment motor
2	Motor mounting bracket
3	Seat back latch point
4	Electric motor gearbox

The rear seat backrest can be adjusted for rake and also lumbar support using switch pack controls located in the rear door trim panel. The passenger side switch pack also contains an additional switch allow the rear seat occupant to move the front seat forward or backward to increase or decrease the rear leg room.

A motor and gearbox located in each of the rear seat backrest latches adjust the rake of the backrest in response to a request from the door switch pack. The switchpack receives a power supply from the CJB (central junction box). When a switch is operated the switch pack outputs a message on the LIN bus to the applicable front seat memory control module. The memory module then outputs the required power supplies to the seat motors to power them to the required position.

Each seat motor has four electrical connections; motor incline and recline, position sense and position sensor ground. The seat motor is operated using power supplies from the applicable front seat memory control module. The polarity of the power supplies is switched to provide the incline/recline functions. A position sensor sends signals back to the memory control module to prevent excessive seat movement.

The rear seats also have a lumbar adjustment in the backrest. This is a similar system to that used for the front seat. A 4-way switch lumbar control switch is located in the rear door switchpack and controls the operation of the backrest lumbar pump and valve block solenoids.

SEATING

DIAGNOSIS AND TESTING

PRINCIPLE OF OPERATION

For a detailed description of the seating systems and operation, refer to the relevant Description and Operation section of the workshop manual
REFER to: Seats (501-10 Seating, Description and Operation).

INSPECTION AND VERIFICATION

CAUTION:

Diagnosis by substitution from a donor vehicle is **NOT** acceptable. Substitution of control modules does not guarantee confirmation of a fault and may also cause additional faults in the vehicle being checked and/or the donor vehicle

NOTES:

- If the control module is suspect and the vehicle remains under manufacturer warranty, refer to the Warranty Policy and Procedures manual or determine if any prior approval programme is in operation, prior to the installation of a new module
- Generic scan tools may not read the codes listed, or may read only five digit codes. Match the five digits from the scan tool to the first five digits of the seven digit code listed to identify the fault (the last two digits give additional information read by the manufacturer approved diagnostic system)
- When performing electrical voltage or resistance tests, always use a digital multimeter (DMM) accurate to three decimal places, and with an up-to-date calibration certificate. When testing resistance, always take the resistance of the DMM leads into account
- Inspect connectors for signs of water ingress, and pins for damage and/or corrosion
- Check and rectify basic faults before beginning diagnostic routines involving pinpoint tests
- If DTCs are recorded and, after performing the pinpoint tests, a fault is not present, an intermittent concern may be the cause. Always check for loose connections and corroded terminals
- The climate system functions in a manner that means any detected error state either intermittent or permanent will shut down the complete seat climate system until the next ignition cycle, this does not mean that both climate units within the one seat have failed. This shut down is design intent to protect the system to ensure that the fault

detected does not damage the units, it is possible that both units are functioning correctly and that the fault lies elsewhere within the system. The following process can be carried out without removing either the seats or the climate units from the vehicle and should correctly identify any failed units, this should ensure that only failed units are changed under warranty. Any units exhibiting the correct reading as per process below, should **NOT** be changed under warranty. If all units have a correct reading then re-confirm customer symptom, if customer symptom is still present then carry out further system checks

- The DTC Index containing an actions list is for guidance only and any reference to "Install a new heater and blower assembly if necessary" should only be carried out following unit failure confirmation using the Pin Out Diagnostics and/or the Over Temperature and Fluid Air Leak Diagnostics contained below, the recording of a DTC does **NOT** signify a permanently failed unit

1. Verify the customer concern
2. Visually inspect for obvious signs of mechanical or electrical damage
3. If an obvious cause for an observed or reported concern is found, correct the cause (if possible) before proceeding to the next step
4. If the cause is not visually evident, carry out normal dealer warranty process, ODST, check for DTC's and refer to the relevant DTC Index
5. 30 mins should have elapsed since last seat/cooled operation prior to carrying out pin testing detailed below. (Connector and Pin Information)

6. Unbolt appropriate seat and tilt it back to gain access to connector! Connector C3140 location in MY 2007-2009 located beneath driver seat, in 2010-2012 located beneath right front seat (Refer to Electrical Information - Electrical Reference Library, contained in TOPIx)

7. Locate and disconnect connector C3140 prior to pin test

8. Using ohm-meter to probe each heat/cooled unit pins(rear of connector), reading should achieve no greater than 10 ohms after 1 minute (initial drift will occur using ohm-meter, post 1 minute reading will have stabilized)

Connector and Pin Information

Left Hand Drive					
All Model years	Passenger Cushion (UG_Blue/Green)	Passenger Cushion (UY_Blue/Yellow)	Passenger Backrest (G_Green)	Passenger Backrest (GN_Green/Brown)	Driver Cu (RN_Red/
Right Hand Drive					
Model years 2007-2009	Passenger Cushion (UG_Blue/Green)	Passenger Cushion (UY_Blue/Yellow)	Passenger Backrest (G_Green)	Passenger Backrest (GN_Green/Brown)	Driver Cu (RN_Red/
Model years 2010-2012	Driver Cushion (UG_Blue/Green)	Driver Cushion (UY_Blue/Yellow)	Driver Backrest (G_Green)	Driver Backrest (GN_Green/Brown)	Passenge Cushion (RN_Red/

9. If a unit reads greater than 10 ohms, replace only that defective unit

10. If all units read less than 10 ohms, do not replace any units. (Refer to step 12)

11. Final check - when unit has been identified strip seat to access unit connector, REFER to: Seats (501-10, Removal &

Installation) and re check ohm reading to confirm greater than 10 ohms prior to removing unit

12. For vehicles where the above diagnostic routine does **NOT** identify a failed unit please refer to Over Temperature and Fluid/Air Leak Diagnostics below, also check for any live technical service bulletins referring to the seat climate system

SEAT CLIMATE CONTROL MODULE/SEAT CLIMATE ASSEMBLY – FURTHER DIAGNOSTICS

In the event of suspected climate seat faults use the pinpoint tests detailed below

Connector Checks

First, check the integrity of the three seat climate control module harness connectors:

1. Disconnect each connector
2. Inspect each connector for cracks and breaks, replace as required
3. Check the integrity of connector terminals for bent terminals, backed-out or badly crimped wires. Rectify as required
4. Reconnect all connectors and retest. If seat climate functions are still faulty, note any DTCs that have been logged by the seat climate control module(s) and refer to the table and pinpoint tests below:

DTC LOGGED	PINPOINT TEST REQUIRED

DTC LOGGED	PINPOINT TEST REQUIRED
NOTE: Where DTCs are marked in bold, this means that there are two possible diagnostic processes that may be applied to resolve these faults. Check the listings below to reference an alternative set of pinpoint tests for these DTCs ▪ B10B9-13 Blower Control - Circuit open ▪ B10B9-4B Blower Control - Over temperature ▪ B1157-13 Blower Control B - Circuit open ▪ B1157-4B Blower Control B - Over temperature ▪ **B120E-4B** Right Thermal Electric Device Control - Over temperature ▪ **B1224-4B** Left Thermal Electric Device Control - Over temperature ▪ B122A-11 Right Seat Cushion Blower Speed Sensor - Circuit short to ground ▪ B122A-12 Right Seat Cushion Blower Speed Sensor - Circuit short to battery ▪ B122B-11 Right Seat Back Blower Speed Sensor - Circuit short to ground ▪ B122B-12 Right Seat Back Blower Speed Sensor - Circuit short to battery ▪ B122C-11 Left Seat Cushion Blower Speed Sensor - Circuit short to ground ▪ B122C-12 Left Seat Cushion Blower Speed Sensor - Circuit short to battery ▪ B122D-11 Left Seat Back Blower Speed Sensor - Circuit short to ground ▪ B122D-12 Left Seat Back Blower Speed Sensor - Circuit short to battery	GO to Pinpoint Test **A.**
	GO to Pinpoint Test **B.**

DTC LOGGED	PINPOINT TEST REQUIRED
NOTE: Where DTCs are marked in bold, this means that there are two possible diagnostic processes that may be applied to resolve these faults. Check the listings below to reference an alternative set of pinpoint tests for these DTCs ▪ **B120E-13** Right Thermal Electric Device Control - Circuit open ▪ **B120E-19** Right Thermal Electric Device Control - Circuit current above threshold ▪ **B1223-13** Right Seat Cushion Temperature Sensor - Circuit open ▪ **B1224-13** Left Thermal Electric Device Control - Circuit open ▪ **B1224-19** Left Thermal Electric Device Control - Circuit current above threshold ▪ **B1225-13** Right Seat Back Temperature Sensor - Circuit open ▪ **B1229-13** Left Seat Back Temperature Sensor - Circuit open ▪ **B1235-13** Left Seat Cushion Temperature Sensor - Circuit open	
▪ B120F-98 Left Seat Cushion - Component or system over temperature ▪ B122E-98 Right Seat Cushion - Component or system over temperature ▪ B122F-98 Right Seat Back - Component or system over temperature ▪ B1230-98 Left Seat Back - Component or system over temperature ▪ B1231-7A Right Seat - Fluid leak or seal failure ▪ B1232-7A Left Seat - Fluid leak or seal failure	GO to Pinpoint Test C.

DTC LOGGED	PINPOINT TEST REQUIRED
NOTE: Where DTCs are marked in bold, this means that there are two possible diagnostic processes that may be applied to resolve these faults. Check the listings above to reference an alternative set of pinpoint tests for these DTCs ▪ **B120E-4B** Right Thermal Electric Device Control - Over temperature ▪ **B120E-13** Right Thermal Electric Device Control - Circuit open ▪ **B120E-19** Right Thermal Electric Device Control - Circuit current above threshold ▪ **B1223-13** Right Seat Cushion Temperature Sensor - Circuit open ▪ **B1224-4B** Left Thermal Electric Device Control - Over temperature ▪ **B1224-13** Left Thermal Electric Device Control - Circuit open ▪ **B1224-19** Left Thermal Electric Device Control - Circuit current above threshold ▪ **B1225-13** Right Seat Back Temperature Sensor - Circuit open ▪ **B1229-13** Left Seat Back Temperature Sensor - Circuit open ▪ **B1235-13** Left Seat Cushion Temperature Sensor - Circuit open	GO to Pinpoint Test **D.**

PINPOINT TEST A : CLIMATE SEATS ASSEMBLY - BLOWER DIAGNOSTICS	
TEST CONDITIONS	DETAILS/RESULTS/ACTIONS
A1: CLIMATE SEATS ASSEMBLY - BLOWER SPEED CONTROL CIRCUIT RESISTANCE CHECKS AT SEAT TO VEHICLE CONNECTOR	
	1

PINPOINT TEST A : CLIMATE SEATS ASSEMBLY - BLOWER DIAGNOSTICS	
	Uncouple connector C3142 from the seat climate control module
	2 Check the resistance of the climate seats blower speed control circuits at connector C3142 ▪ For right-side seat cushion blower, check resistance at pins 3 and 7 ▪ For right-side seat backrest blower, check resistance at pins 4 and 7 ▪ For left-side seat cushion blower, check resistance at pins 11 and 15 ▪ For left-side seat backrest blower, check resistance at pins 12 and 15
	Is the resistance between 290 and 420 kilo-ohms? **Yes** No circuit faults present. No further action **No** GO to A2.
A2: CLIMATE SEATS ASSEMBLY - BLOWER POWER CIRCUIT RESISTANCE CHECKS AT SEAT CLIMATE ASSEMBLY CONNECTOR	
	1 Locate the appropriate seat backrest/seat cushion climate assembly connector
	2 Disconnect connector
	3 Check the integrity of connector terminals for bent terminals, backed-out or badly crimped wires. Rectify as required
	4 Check the resistance of the climate seats blower power circuits at the climate assembly connector, pins 2 and 4
	Is the resistance between 290 and 420 kilo-ohms? **Yes** GO to A3. **No** Replace the seat climate assembly
A3: CLIMATE SEATS ASSEMBLY - BLOWER SPEED CONTROL CIRCUIT RESISTANCE CHECKS AT SEAT CLIMATE ASSEMBLY CONNECTOR	
	1 Check the resistance of the climate seats blower control circuits at the climate assembly connector, pins 4 and 7

PINPOINT TEST A : CLIMATE SEATS ASSEMBLY - BLOWER DIAGNOSTICS	
	Is the resistance between 290 and 420 kilo-ohms? **Yes** No internal circuit faults present. Check for circuit faults in wiring harness between seat climate control module and climate seat assembly and replace as required **No** Replace the seat climate assembly

PINPOINT TEST B : CLIMATE SEATS ASSEMBLY - THERMAL ELECTRIC DEVICE (TED) DIAGNOSTICS	
TEST CONDITIONS	DETAILS/RESULTS/ACTIONS
B1: CLIMATE SEATS ASSEMBLY - TED SENSOR CIRCUIT RESISTANCE CHECKS AT SEAT TO VEHICLE CONNECTOR	
	1 Uncouple connector C3141 from the seat climate control module
	2 Check the resistance of the climate seats TED sensor circuits at connector C3141 ▪ For right-side seat cushion TED sensor circuits, check resistance at pins 2 and 3 ▪ For right-side seat backrest TED sensor circuits, check resistance at pins 4 and 5 ▪ For left-side seat cushion TED sensor circuits, check resistance at pins 7 and 8 ▪ For left-side seat backrest TED sensor circuits, check resistance at pins 9 and 10
	Is the resistance between 0.9 and 1.1 kilo-ohms? (Note: these values are based on an ambient temperature of 22° C/72°F) **Yes** No circuit faults present. No further action **No** GO to B2.
B2: CLIMATE SEATS ASSEMBLY - TED SENSOR CIRCUIT RESISTANCE CHECKS AT SEAT CLIMATE ASSEMBLY CONNECTOR	
	1 Locate the appropriate seat backrest/seat cushion climate assembly connector

PINPOINT TEST B : CLIMATE SEATS ASSEMBLY - THERMAL ELECTRIC DEVICE (TED) DIAGNOSTICS	
	2 Disconnect connector
	3 Check the integrity of connector terminals for bent terminals, backed-out or badly crimped wires. Rectify as required
	4 Check the resistance of the climate seats TED sensor circuits at the climate assembly connector, pins 5 and 8 (Green and Green wires)
	Is the resistance between 0.9 and 1.1 kilo-ohms? (Note: these values are based on an ambient temperature of 22° C/72°F) **Yes** GO to B3. **No** Replace the seat climate assembly
B3: CLIMATE SEATS ASSEMBLY - TED SUPPLY CIRCUIT OPEN CIRCUIT CHECKS AT SEAT CLIMATE ASSEMBLY CONNECTOR	
	1 Check the TED supply circuits at the climate assembly connector, pins 1 and 3 (Blue and Yellow wires) for open circuit faults
	Is an open-circuit fault present? **Yes** Replace the seat climate assembly **No** No internal circuit faults present. Check for circuit faults in wiring harness between seat climate control module and climate seat assembly and replace as required

PINPOINT TEST C : CLIMATE SEATS ASSEMBLY - BLOWER AND DUCTING DIAGNOSTICS	
TEST CONDITIONS	**DETAILS/RESULTS/ACTIONS**
C1: CLIMATE SEATS ASSEMBLY - BLOWER SPEED CONTROL CIRCUIT RESISTANCE CHECKS AT SEAT TO VEHICLE CONNECTOR	
	1 Uncouple connector C3142 from the seat climate control module
	2 Check the resistance of the climate seats blower speed control circuits at connector C3142 ▪ For right-side seat cushion blower, check resistance at pins 3 and 7

PINPOINT TEST C : CLIMATE SEATS ASSEMBLY - BLOWER AND DUCTING DIAGNOSTICS	
	▪ For right-side seat backrest blower, check resistance at pins 4 and 7 ▪ For left-side seat cushion blower, check resistance at pins 11 and 15 ▪ For left-side seat backrest blower, check resistance at pins 12 and 15
	Is the resistance between 290 and 420 kilo-ohms? **Yes** No circuit faults present. No further action **No** GO to C2.
C2: CLIMATE SEATS ASSEMBLY - BLOWER CIRCUIT RESISTANCE CHECKS AT SEAT CLIMATE ASSEMBLY CONNECTOR	
	1 Locate the appropriate seat backrest/seat cushion climate assembly connector
	2 Disconnect connector
	3 Check the integrity of connector terminals for bent terminals, backed-out or badly crimped wires. Rectify as required
	4 Check the resistance of the climate seats blower circuits at the climate assembly connector, pins 2 and 4 (Violet and Black wires)
	Is the resistance between 290 and 420 kilo-ohms? **Yes** GO to C3. **No** Replace the seat climate assembly
C3: CLIMATE SEATS ASSEMBLY - BLOWER CONTROL CIRCUIT RESISTANCE CHECKS AT SEAT CLIMATE ASSEMBLY CONNECTOR	
	1 Check the resistance of the climate seats blower control circuits at the climate assembly connector, pins 4 and 7 (Black and Purple wires)
	Is the resistance between 290 and 420 kilo-ohms? **Yes** No internal circuit faults present. Check for circuit faults in wiring harness between seat climate control module and

PINPOINT TEST C : CLIMATE SEATS ASSEMBLY - BLOWER AND DUCTING DIAGNOSTICS	
	climate seat assembly and replace as required. If no harness faults are found, GO to C4. **No** Replace the seat climate assembly
C4: CLIMATE SEATS ASSEMBLY - BLOWER DUCTING INSPECTION	
	1 Check that the ducting is securely attached to the blower and thermal electric device
	2 Check the ducting for holes, cuts or tears
	Is the ducting undamaged and securely attached to the blower and thermal electric device? **Yes** GO to C5. **No** Replace the seat climate assembly
C5: CLIMATE SEATS ASSEMBLY - EXHAUST AIRFLOW CHECKS	
	1 Check for blockages or restrictions at the thermal electric device exhaust vent
	Are blockages or restrictions present? **Yes** Rectify as required **No** GO to C6.
C6: CLIMATE SEATS ASSEMBLY - BLOWER AIRFLOW CHECKS	
	1 Check for blockages or restrictions at the blower air intake
	2 Check that the blower fan movement is not restricted
	Are there any air intake blockages or restrictions to the blower fan movement? **Yes** Rectify as required **No** No further action

PINPOINT TEST D : CLIMATE SEATS ASSEMBLY - THERMAL ELECTRIC DEVICE (TED) AND DUCTING DIAGNOSTICS	
TEST CONDITIONS	**DETAILS/RESULTS/ACTIONS**

PINPOINT TEST D : CLIMATE SEATS ASSEMBLY - THERMAL ELECTRIC DEVICE (TED) AND DUCTING DIAGNOSTICS	
D1: CLIMATE SEATS ASSEMBLY - TED SENSOR CIRCUIT RESISTANCE CHECKS AT SEAT TO VEHICLE CONNECTOR	
	1 Uncouple connector C3141 from the seat climate control module
	2 Check the resistance of the climate seats TED sensor circuits at connector C3141 ▪ For right-side seat cushion TED sensor circuits, check resistance at pins 2 and 3 ▪ For right-side seat backrest TED sensor circuits, check resistance at pins 4 and 5 ▪ For left-side seat cushion TED sensor circuits, check resistance at pins 7 and 8 ▪ For left-side seat backrest TED sensor circuits, check resistance at pins 9 and 10
	Is the resistance between 0.9 and 1.1 kilo-ohms? (Note: these values are based on an ambient temperature of 22° C/72°F) **Yes** No circuit faults present. No further action **No** GO to D2.
D2: CLIMATE SEATS ASSEMBLY - TED SENSOR CIRCUIT RESISTANCE CHECKS AT SEAT CLIMATE ASSEMBLY CONNECTOR	
	1 Locate the appropriate seat backrest/seat cushion climate assembly connector
	2 Disconnect connector
	3 Check the integrity of connector terminals for bent terminals, backed-out or badly crimped wires. Rectify as required
	4 Check the resistance of the climate seats TED sensor circuits at the climate assembly connector, pins 5 and 8 (Green and Green wires)
	Is the resistance between 0.9 and 1.1 kilo-ohms? (Note: these values are based on an ambient temperature of 22° C/72°F) **Yes** GO to D3.

PINPOINT TEST D : CLIMATE SEATS ASSEMBLY - THERMAL ELECTRIC DEVICE (TED) AND DUCTING DIAGNOSTICS	
	No Replace the seat climate assembly
D3: CLIMATE SEATS ASSEMBLY - TED SUPPLY CIRCUIT OPEN CIRCUIT CHECKS AT SEAT CLIMATE ASSEMBLY CONNECTOR	
	1 Check the TED supply circuits at the climate assembly connector, pins 1 and 3 (Blue and Yellow wires) for open circuit faults
	Is an open-circuit fault present? **Yes** Replace the seat climate assembly **No** No internal circuit faults present. Check for circuit faults in wiring harness between seat climate control module and climate seat assembly and replace as required. If no harness faults are found, GO to D4.
D4: CLIMATE SEATS ASSEMBLY - TED DUCTING INSPECTION	
	1 Check that the ducting is securely attached to the blower and thermal electric device
	2 Check the ducting for holes, cuts or tears
	Is the ducting undamaged and securely attached to the blower and thermal electric device? **Yes** GO to D5. **No** Replace the seat climate assembly
D5: CLIMATE SEATS ASSEMBLY - EXHAUST AIRFLOW CHECKS	
	1 Check for blockages or restrictions at the thermal electric device exhaust vent
	Are blockages or restrictions present? **Yes** Rectify as required **No** GO to D6.
D6: CLIMATE SEATS ASSEMBLY - BLOWER AIRFLOW CHECKS	
	1 Check for blockages or restrictions at the blower air intake
	2 Check that the blower fan movement is not restricted

PINPOINT TEST D : CLIMATE SEATS ASSEMBLY - THERMAL ELECTRIC DEVICE (TED) AND DUCTING DIAGNOSTICS	
	Are there any air intake blockages or restrictions to the blower fan movement? **Yes** Rectify as required **No** No further action

OVER TEMPERATURE AND FLUID/AIR LEAK DIAGNOSTICS

Model years 2007-2009	
Affected DTC's ▪ B1151-98 ▪ B1152-98 ▪ B1153-98 ▪ B1154-98 ▪ B1155-7A ▪ B1156-7A	▪ Once the diagnostic process detailed above has been carried out and it has been identified that there has not been a failure of any of the climate units then you should refer back to the relevant climate system DTC codes that have been recorded ▪ DTC codes listed that have 7A or 98 following the code signify a possible air leak or air flow restriction within the system ▪ In these circumstances starting with the seat base you should check all ducting connections for correct engagement and inspect ducting for signs of damage which could result in an air leak (for connection issues re-connect and test system) Only in the event of finding damage to the ducting of one of the units should the unit be replaced and it should be noted that only that unit should be replaced ▪ Due to the design function of the system both climate units in the one seat operate as one, therefore if an issue is detected in one of the units then both units are shut down to protect the system until next ignition cycle, in these circumstances you should change only the damaged unit and **NOT** change both units
Model years 2010-2012	
Affected DTCs ▪ B120F-98 ▪ B122E-98	▪ Once the diagnostic process detailed above has been carried out and it has been identified that there has not been a failure of any of the climate units then you should refer back to the relevant climate system DTC codes that have been recorded ▪ DTC codes listed that have 7A or 98 following the code signify a possible air leak or air flow restriction within the system ▪ In these circumstances starting with the seat base you should check all ducting connections for correct engagement and

▪ B122F-98 ▪ B1230-98 ▪ B1231-7A ▪ B1232-7A	inspect ducting for signs of damage which could result in an air leak (for connection issues re-connect and test system) Only in the event of finding damage to the ducting of one of the units should the unit be replaced and it should be noted that only that unit should be replaced ▪ Due to the design function of the system both climate units in the one seat operate as one, therefore if an issue is detected in one of the units then both units are shut down to protect the system until next ignition cycle, in these circumstances you should change only the damaged unit and **NOT** change both units

DTC INDEX

For a list of Diagnostic Trouble Codes (DTCs) that could be logged on this vehicle, please refer to Section 100-00. REFER to: Diagnostic Trouble Code (DTC) Index - DTC: Module Name: Seat Control Module E/F - Front Climatic Seats (100-00 General Information, Description and Operation).

GLASS, FRAMES AND MECHANISMS

DOOR WINDOW MOTOR INITIALIZATION (G1345535)

GENERAL PROCEDURES

NOTES:

- Make sure that the vehicle battery is fully charged before carrying out this procedure.
- After the battery has been disconnected or a new window regulator and motor or door module has been installed, it is necessary to initialize each door window motor separately to operate the **one-touch** and anti-trap function.
- In addition to this manual procedure, the approved diagnostic tool can also be used to initialize the door window motor.

1. Start the engine.
2. Operate the window control switch until the door window glass is in the fully closed position, continue to operate the window control switch for a further two seconds.
3. Release the window control switch.

4. Operate the window control switch in the closed position and continue to operate the window control switch for a further two seconds.

5. Operate the window control switch until the door window glass is in the fully open position (**one-touch** down).

6. **NOTES:**

   - If the door window motor initialization has been completed correctly, when the window control switch is operated, the door window glass should move to the fully closed position (**one-touch** up) automatically.
   - If the door window glass does not fully close automatically (**one-touch** up), repeat the complete procedure.

   Operate the window control switch once to the close position.

   - If multiple attempts have failed to initialize the door window motor, refer the diagnosis and testing procedure.
     For additional information, refer to: Glass, Frames and Mechanisms (501-11 Glass, Frames and Mechanisms, Diagnosis and Testing).

7. Repeat the door window motor initialization for each door window motor.

GLASS, FRAMES AND MECHANISMS

DRIVER DOOR WINDOW CONTROL SWITCH (G905939)

REMOVAL AND INSTALLATION

86.25.08	SWITCH - MASTER WINDOW - RENEW	ALL DERIVATIVES	0.4	USED WITHINS	+

REMOVAL

1. Remove the front door trim panel.
   For additional information, refer to: Front Door Trim Panel (501-05, Removal and Installation).

2.

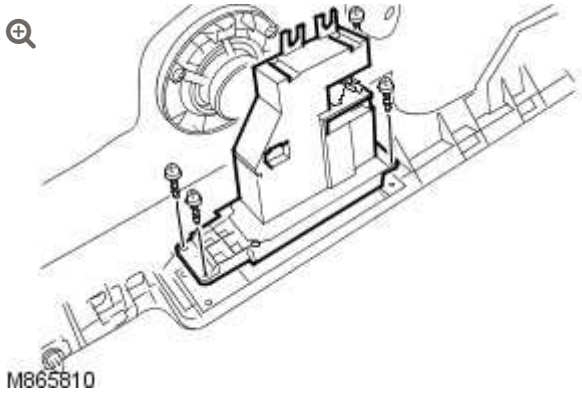

Remove the driver door window control switch.

- Remove the 4 screws.

INSTALLATION

1. Install the driver door window control switch.
   - Tighten the screws.
2. Install the front door trim panel.
   For additional information, refer to: Front Door Trim Panel (501-05, Removal and Installation).

GLASS, FRAMES AND MECHANISMS

DIAGNOSIS AND TESTING

PRINCIPLES OF OPERATION

For a detailed description of the Glass, Frames and Mechanisms, refer to the relevant Description and Operation section in the workshop manual.

INSPECTION AND VERIFICATION

CAUTION:

Diagnosis by substitution from a donor vehicle is **NOT** acceptable. Substitution of control modules does not guarantee confirmation of a fault, and may also cause additional faults in the vehicle being tested and/or the donor vehicle.

NOTES:

- If a control module or a component is suspect and the vehicle remains under manufacturer warranty, refer to the Warranty Policy and Procedures manual, or determine if any prior approval programme is in operation, prior to the installation of a new module/component.
- When performing voltage or resistance tests, always use a digital multimeter accurate to three decimal places, and with an up-to-date calibration certificate. When testing resistance always take the resistance of the digital multimeter leads into account.
- Check and rectify basic faults before beginning diagnostic routines involving pinpoint tests.
- Refer to Section 100-00 General Information for window glass health and safety precautions.

1. Verify the customer concern

2. Visually inspect for obvious signs of damage and system integrity

Visual Inspection

ELECTRICAL
▪ Physical damage to the windshield

3. If an obvious cause for an observed or reported concern is found, correct the cause (if possible) before proceeding to the next step

4.

If the cause is not visually evident, verify the symptom and refer to the Symptom Chart, alternatively check for Diagnostic Trouble Codes (DTCs) and refer to the DTC Index

5. Check DDW for open campaigns. Refer to the corresponding bulletins and SSMs which may be valid for the specific customer complaint and carry out the recommendations as required

WARRANTY REPAIRS

NOTES:

- The warranty period for the windshield is twelve months with the exception of delamination and electrical faults.
- Warranty repairs should be completed using genuine parts, in accordance with the Warranty Policy and Procedures Manual.

1. Draw a line around the windshield damage using a marker pen.
2. Photograph the entire windshield. If the damage extends behind any trim, remove the trim and take further photographs.
3. Photograph the trademark logo and code to validate the windshield as factory fitment.

SYMPTOM CHART

SYMPTOM	POSSIBLE CAUSES	ACTION
Scratches	▪ Debris trapped under a wiper blade ▪ Foreign object damage ▪ Fouling by trim	▪ GO to Pinpoint Test A.

SYMPTOM	POSSIBLE CAUSES	ACTION
Chips	▪ Foreign object damage	▪ GO to Pinpoint Test **B.**
Cracks	▪ Foreign object damage ▪ Impact damage during assembly	▪ GO to Pinpoint Test **C.**
Delamination	▪ Manufacturing defect	▪ GO to Pinpoint Test **D.**

PINPOINT TESTS

NOTE:

A scratch will usually be regular in shape, following the line of the object that caused it.

PINPOINT TEST A : SCRATCH TESTS	
TEST CONDITIONS	DETAILS/RESULTS/ACTIONS
	A1: SCRATCH TEST 1
	1 Probe using the tip of a pencil to identify a groove in the windshield surface.
	Is there a groove? **Yes** Windshield scratched. GO to A2. **No** Defect not valid.
	A2: SCRATCH TEST 2
	1 Check for trim, body panels, or foreign objects that may have caused the scratch.
	Was the scratch caused by a foreign object? **Yes** The damage is not due to a defect or an assembly error.

PINPOINT TEST A : SCRATCH TESTS	
	No Rectify as appropriate.

NOTE:

Impact damage may cause a crack to form.

PINPOINT TEST B : CHIP TESTS	
TEST CONDITIONS	DETAILS/RESULTS/ACTIONS
B1: CHIP TEST 1	
	1 Assess the damage by probing with the tip of a pencil.
	Is the damaged area rough (indicating a breach of the windshield surface)? **Yes** Damage caused by the impact of a foreign object. Not a manufacturing defect. **No** Install a new windshield.

NOTE:

Multiple cracks will radiate out from the source.

PINPOINT TEST C : CRACK TESTS	
TEST CONDITIONS	DETAILS/RESULTS/ACTIONS
C1: CRACK TEST 1	
	NOTE: A crack will be detectable as a step in the glass. 1

PINPOINT TEST C : CRACK TESTS	
	Confirm the presence of a crack by probing with the tip of a pencil.
	Is the windshield cracked? **Yes** Windshield cracked. **GO to C2**. **No** Windshield not cracked. GO to Pinpoint Test **A.**
C2: CRACK TEST 2	
	1 Assess the source of the crack by probing with the tip of a pencil.
	Is there evidence of impact damage being the source of the crack? **Yes** GO to Pinpoint Test **B.** **No** Install a new windshield.

PINPOINT TEST D : DELAMINATION TESTS	
TEST CONDITIONS	**DETAILS/RESULTS/ACTIONS**
D1: DELAMINATION TEST 1	
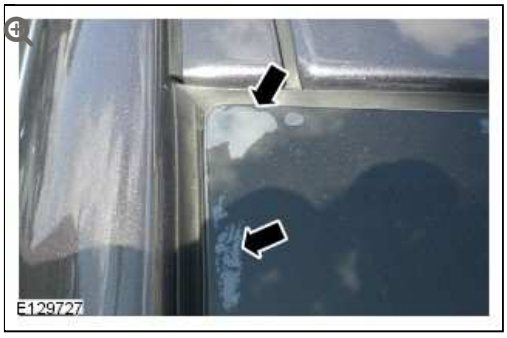	1 Visually assess the windshield for delamination.
	Have the glass laminates separated? **Yes** Install a new windshield. **No** No further action.

For a complete list of all Diagnostic Trouble Codes (DTCs) that could be logged on this vehicle, please refer to Section 100-00.

FRONT DOOR WINDOW GLASS (G916875)

REMOVAL AND INSTALLATION

76.31.01	GLASS - FRONT DOOR - RENEW	ALL DERIVATIVES	0.6	USED WITHINS	+

REMOVAL

1. Lower the front door window glass.

2. Disconnect the battery ground cable.
   For additional information, refer to: Specifications (414-00, Specifications).

3. Remove the side air bag module.
   For additional information, refer to: Side Air Bag Module (501-20, Removal and Installation).

4. Disconnect the door speaker electrical connector.

5. Remove the front door inner weathershield.

6. 

   Release the front door window glass from the regulator.

   - Loosen the 2 bolts.

7. Remove the front door window glass.

INSTALLATION

1. Install the front door window glass.
   - Install the bolts, but do not tighten fully at this stage.
2. Raise the front door window glass.
   - Check and adjust the alignment of the front door window glass.
   - Tighten the 2 bolts to 10 Nm (7 lb.ft).
3. Install the front door inner weathershield.
4. Connect the door speaker electrical connector.
5. Install the side air bag module.
   For additional information, refer to: Side Air Bag Module (501-20, Removal and Installation).

FRONT DOOR WINDOW REGULATOR MOTOR (G916874)

REMOVAL AND INSTALLATION

REMOVAL

1. Remove the front door window glass.
   For additional information, refer to: Front Door Window Glass (501-11, Removal and Installation).

2. 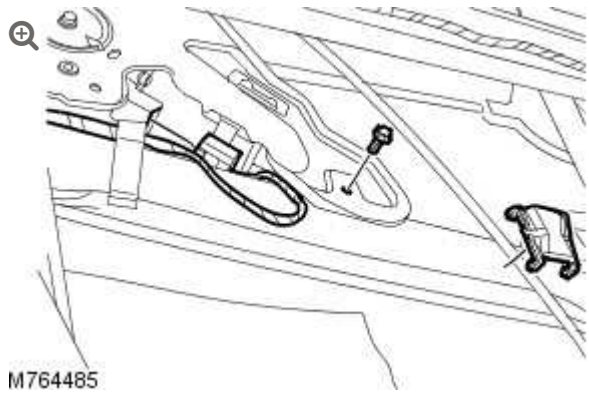

   Release the front door window regulator and motor from the side impact protection beam.

   - Disconnect the electrical connector.
   - Remove the bolt.
   - Remove the clip.

- Remove the clamp.

3. 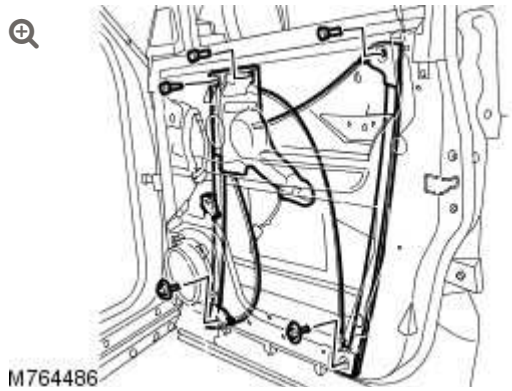

   Remove the front door window regulator and motor.
   - Remove and discard the 2 lower bolts.
   - Remove the 3 upper bolts.

INSTALLATION

1. Install the front door window regulator and motor.
   - Remove the 2 clips.
   - Install the clamp.
   - Tighten the 4 upper bolts to 10 Nm (7 lb.ft).
   - Tighten the 2 new lower bolts to 10 Nm (7 lb.ft).
   - Install the clip.

2. Connect the front door window regulator and motor electrical connector.

3. Install the front door window glass.
   For additional information, refer to: Front Door Window Glass (501-11, Removal and Installation).

GLASS, FRAMES AND MECHANISMS

DIAGNOSIS AND TESTING

PRINCIPLE OF OPERATION

For a detailed description of the glass, frames and mechanisms and operation, refer to the relevant Description and Operation section of the workshop manual. REFER to: Glass, Frames and Mechanisms (501-11 Glass, Frames and Mechanisms, Description and Operation).

INSPECTION AND VERIFICATION

CAUTION:

Diagnosis by substitution from a donor vehicle is **NOT** acceptable. Substitution of control modules does not guarantee confirmation of a fault and may also cause additional faults in the vehicle being checked and/or the donor vehicle.

NOTE:

Check and rectify basic faults before beginning diagnostic routines involving pinpoint tests.

1. Verify the customer concern.
2. Visually inspect for obvious signs of mechanical or electrical damage.

Visual Inspection

MECHANICAL	ELECTRICAL
▪ Window control switches condition and installation ▪ Window motors/regulators ▪ Window channels/runners ▪ Window cables	▪ Fuses ▪ Harnesses and connectors ▪ Window lift relay ▪ Window control switches ▪ Window motors

3. If an obvious cause for an observed or reported concern is found, correct the cause (if possible) before proceeding to the next step.
4. If the cause is not visually evident, verify the symptom and refer to the Symptom Chart, alternatively check for Diagnostic Trouble Codes (DTCs) and refer to the DTC Index.

SYMPTOM CHART

SYMPTOM	POSSIBLE CAUSES	ACTION
	▪ Fuse(s)	

SYMPTOM	POSSIBLE CAUSES	ACTION
Window(s) inoperative	▪ Switch fault ▪ Front switch isolator fault ▪ Motor/Regulator fault ▪ Channel/Runner fault ▪ Cable fault ▪ Harness fault	▪ Check the fuses. Check the suspect window operation from the individual door switch and from the driver door master switch (it is unlikely that both switches would fail at the same time, so if the window is inoperative from either switch, suspect a fault other than a switch). ▪ If the inoperative window is a rear unit, check the function of the rear isolator at the master switch. ▪ If the concern persists and a noise cannot be heard when operating the door window glass, GO to Pinpoint Test **B.** ▪ If the concern persists and a noise can be heard when operating the door window glass, GO to Pinpoint Test **C.**
Window(s) 'one-shot' function inoperative	▪ Window motor initialization required ▪ Switch fault	**NOTE:** Do not install a new door window regulator motor for this concern. If the battery has been disconnected, carry out the initialization procedure. REFER to: Door Window Motor Initialization (501-11, General Procedures). . Check the switch function after initialization.
Window(s) noisy during operation	▪ Channel/Runner fault ▪ Cable fault ▪ Motor/Regulator fault ▪ Incorrect adjustment of door window glass	GO to Pinpoint Test **A.**

SYMPTOM	POSSIBLE CAUSES	ACTION
Rear window does not defrost	▪ Fuse ▪ Switch fault ▪ Relay fault ▪ Element fault ▪ Circuit fault	Check fuse. Check the operation of the heated rear window switch and relay. Check the element for continuity. Check the heated rear window circuit. Refer to the electrical guides.
Slow or partial window operation	▪ Fuse ▪ Switch fault ▪ Relay fault ▪ Element fault ▪ Circuit fault	GO to Pinpoint Test **D.**
Wind noise between the door window glass and seal	▪ Incorrect adjustment of door window glass ▪ Channel/Runner fault ▪ Cable fault ▪ Motor/Regulator fault	GO to Pinpoint Test **E.**
Rear door window bounce back	▪ Window motor initialization required (using IDS/SDD)	**NOTE:** Do not install a new door window regulator motor for this concern. Refer to IDS/SDD.
Front door window bounce back	▪ Window motor initialization required ▪ Channel/Runner fault	**NOTE:** Do not install a new door window regulator motor for this concern.

SYMPTOM	POSSIBLE CAUSES	ACTION
		GO to Pinpoint Test **F.**

DTC INDEX

For a list of Diagnostic Trouble Codes (DTCs) that could be logged on this vehicle, please refer to Section 100-00. REFER to: (100-00 General Information)

Diagnostic Trouble Code (DTC) Index - DTC: Module Name: Central Junction Box (Description and Operation),
Diagnostic Trouble Code (DTC) Index - DTC: Module Name: Driver/Passenger Door Module (Description and Operation).

PINPOINT TEST

PINPOINT TEST A : WINDOW(S) NOISY DURING OPERATION	
TEST CONDITIONS	DETAILS/RESULTS/ACTIONS
A1: CHECK THE DOOR WINDOW GLASS IS SECURE	
	1 Remove the door window glass outer waist seal.
	2 Check if the door glass installed correctly and secured to the door window regulator.
	Is the door window glass correctly installed and secure? **Yes** GO to A2. **No** Make sure that the door window glass retaining bracket(s) are secured to the door window glass (bonded), if damaged, install a new door window glass as necessary. REFER to: Front Door Window Glass (501-11, Removal and Installation) / Rear Door Window Glass (501-11, Removal and Installation). If the door window glass retaining bracket(s) are OK, adjust the door window glass referring to the door glass setting procedure in this procedure.

PINPOINT TEST A : WINDOW(S) NOISY DURING OPERATION	
A2: CHECK THE OPERATION OF THE DOOR WINDOW REGULATOR MOTOR	
	1 Remove the door window glass as necessary. REFER to: Front Door Window Glass (501-11, Removal and Installation) / Rear Door Window Glass (501-11, Removal and Installation).
	2 Operate the door window regulator four times.
	Does the door window regulator operate correctly (without noise)? **Yes** Remove any foreign material from door window regulator and lubricate the window runners. Test the system for normal operation. If the concern persists, GO to A3. **No** Install a new door window regulator as necessary. REFER to: Front Door Window Regulator Motor (501-11, Removal and Installation) / Rear Door Window Regulator Motor (501-11, Removal and Installation).
A3: CHECK THAT THE DOOR WINDOW GLASS SEAL IS FREE FROM FOREIGN MATERIAL	
	1 Check for any foreign material or obstruction in the door window glass seal.
	Is the door window glass seal free from foreign material? **Yes** GO to A4. **No** Remove any foreign material from door window glass seal and lubricate the seal. Test the system for normal operation.
A4: CHECK THAT THE DOOR WINDOW GLASS SEAL IS INSTALLED CORRECTLY	
	1 Check that the door window glass seal is installed correctly.
	Is the door window glass seal installed correctly? **Yes** GO to A5. **No** Install the door window glass seal correctly. Test the system for normal operation.
A5: CHECK THAT THE DOOR WINDOW GLASS SEAL IS NOT WORN IN THE CHANNELS	

PINPOINT TEST A : WINDOW(S) NOISY DURING OPERATION	
	1 Visually check that the door window glass seal is not worn in the door channels.
	Is the door window glass seal worn in the channels? **Yes** Install a new door window glass seal as necessary. Test the system for normal operation. **No** Install the door window glass. Adjust the door window glass referring to the Door glass setting procedure in this procedure.

PINPOINT TEST B : WINDOW(S) INOPERATIVE (MOTOR NOISE CANNOT BE HEARD)	
TEST CONDITIONS	DETAILS/RESULTS/ACTIONS
B1: CHECK FOR DOOR WINDOW REGULATOR MOTOR NOISE	
	1 Operate the door window regulator motor as necessary.
	Is there a noise from the door window regulator motor when operated? **Yes** GO to B3. **No** GO to B2.
B2: CHECK THE VOLTAGE TO THE DOOR WINDOW REGULATOR MOTOR	
	1 Using a multimeter, check the voltage to the door window regulator motor.
	Is the voltage greater than 10 volts? **Yes** Install a new door window regulator motor as necessary. REFER to: Front Door Window Regulator Motor (501-11, Removal and Installation) / Rear Door Window Regulator Motor (501-11, Removal and Installation). **No** Repair the wiring harness. Test the system for normal operation.
B3: CHECK THAT THE DOOR WINDOW GLASS SEAL IS FREE FROM FOREIGN MATERIAL	
	1

PINPOINT TEST B : WINDOW(S) INOPERATIVE (MOTOR NOISE CANNOT BE HEARD)	
	Check for any foreign material or obstruction in the door window glass seal.
	Is the door window glass seal free from foreign material? **Yes** GO to B4. **No** Remove any foreign material from door window glass seal and lubricate the seal. Test the system for normal operation.
B4: CHECK THAT THE DOOR WINDOW GLASS SEAL IS INSTALLED CORRECTLY	
	1 Check that the door window glass seal is installed correctly.
	Is the door window glass seal installed correctly? **Yes** GO to B5. **No** Install the door window glass seal correctly. Test the system for normal operation.
B5: CHECK THAT THE DOOR WINDOW GLASS SEAL IS NOT WORN IN THE CHANNELS	
	1 Visually check that the door window glass seal is not worn in the door channels.
	Is the door window glass seal worn in the channels? **Yes** Install a new door window glass seal as necessary. Adjust the door window glass referring to the Door glass setting procedure in this procedure. Test the system for normal operation. **No** Adjust the door window glass referring to the Door glass setting procedure in this procedure.

PINPOINT TEST C : WINDOW(S) INOPERATIVE (MOTOR NOISE CAN BE HEARD)	
TEST CONDITIONS	**DETAILS/RESULTS/ACTIONS**
C1: CHECK THE DOOR WINDOW GLASS IS SECURE	
	1 Remove the door window glass outer waist seal.
	2

PINPOINT TEST C : WINDOW(S) INOPERATIVE (MOTOR NOISE CAN BE HEARD)	
	Check if the door glass installed correctly and secured to the door window regulator.
	Is the door window glass correctly installed and secure? **Yes** GO to C2. **No** Install a new door window glass as necessary. REFER to: Front Door Window Glass (501-11, Removal and Installation) / Rear Door Window Glass (501-11, Removal and Installation).
C2: CHECK THE DOOR WINDOW REGULATOR INTEGRITY	
	1 Visually inspect the cables, rollers and rail sliders for foreign material.
	Are the cables, rollers and rail sliders free from foreign material? **Yes** GO to C3. **No** Remove any foreign material. Test the system for normal operation. If the concern persists, install a new door window regulator as necessary. REFER to: Front Door Window Regulator Motor (501-11, Removal and Installation) / Rear Door Window Regulator Motor (501-11, Removal and Installation).
C3: CHECK THAT THE DOOR WINDOW GLASS SEAL IS FREE FROM FOREIGN MATERIAL	
	1 Check for any foreign material or obstruction in the door window glass seal.
	Is the door window glass seal free from foreign material? **Yes** GO to C4. **No** Remove any foreign material from door window glass seal and lubricate the seal. Test the system for normal operation.
C4: CHECK THAT THE DOOR WINDOW GLASS SEAL IS INSTALLED CORRECTLY	
	1 Check that the door window glass seal is installed correctly.
	Is the door window glass seal installed correctly? **Yes**

PINPOINT TEST C : WINDOW(S) INOPERATIVE (MOTOR NOISE CAN BE HEARD)	
	GO to C5. **No** Install the door window glass seal correctly. Test the system for normal operation.
C5: CHECK THAT THE DOOR WINDOW GLASS SEAL IS NOT WORN IN THE CHANNELS	
	1 Visually check that the door window glass seal is not worn in the door channels.
	Is the door window glass seal worn in the channels? **Yes** Install a new door window glass seal as necessary. Test the system for normal operation. **No** Adjust the door window glass referring to the door glass setting procedure in this procedure.

PINPOINT TEST D : SLOW OR PARTIAL WINDOW OPERATION	
TEST CONDITIONS	DETAILS/RESULTS/ACTIONS
D1: CHECK THE DOOR WINDOW GLASS IS SECURE	
	1 Remove the door window glass outer waist seal.
	2 Check if the door glass installed correctly and secured to the door window regulator.
	Is the door window glass correctly installed and secure? **Yes** GO to D2. **No** Install a new door window glass as necessary. REFER to: Front Door Window Glass (501-11, Removal and Installation) / Rear Door Window Glass (501-11, Removal and Installation).
D2: CHECK THE OPERATION OF THE DOOR WINDOW REGULATOR	
	1 Remove the door window glass as necessary. REFER to: Front Door Window Glass (501-11, Removal and Installation) / Rear Door Window Glass (501-11, Removal and Installation).
	2 Operate the door window regulator as necessary.

PINPOINT TEST D : SLOW OR PARTIAL WINDOW OPERATION	
	Does the door window regulator operate correctly? **Yes** GO to D3. **No** GO to D6.
D3: CHECK THAT THE DOOR WINDOW GLASS SEAL IS FREE FROM FOREIGN MATERIAL	
	1 Check for any foreign material or obstruction in the door window glass seal.
	Is the door window glass seal free from foreign material? **Yes** GO to D4. **No** Remove any foreign material from door window glass seal and lubricate the seal. Test the system for normal operation.
D4: CHECK THAT THE DOOR WINDOW GLASS SEAL IS INSTALLED CORRECTLY	
	1 Check that the door window glass seal is installed correctly.
	Is the door window glass seal installed correctly? **Yes** GO to D5. **No** Install the door window glass seal correctly. Test the system for normal operation.
D5: CHECK THAT THE DOOR WINDOW GLASS SEAL IS NOT WORN IN THE CHANNELS	
	1 Visually check that the door window glass seal is not worn in the door channels.
	Is the door window glass seal worn in the channels? **Yes** Install a new door window glass seal as necessary. Test the system for normal operation. **No** Install the door window glass. Adjust the door window glass referring to the Door glass setting procedure in this procedure. Test the system for normal operation.
D6: CHECK THE DOOR WINDOW REGULATOR MOTOR INTEGRITY	
	1 Visually inspect the cables, rollers and rail sliders for foreign material.

PINPOINT TEST D : SLOW OR PARTIAL WINDOW OPERATION	
	Are the cables, rollers and rail sliders free from foreign material? **Yes** GO to D7. **No** Remove any foreign material. Test the system for normal operation. If the concern persists, install a new door window regulator as necessary. REFER to: Front Door Window Regulator Motor (501-11, Removal and Installation) / Rear Door Window Regulator Motor (501-11, Removal and Installation).
D7: CHECK THE VOLTAGE TO THE DOOR WINDOW REGULATOR MOTOR	
	1 Using a multimeter, check the voltage to the door window regulator motor.
	Is the voltage greater than 10 volts? **Yes** Install a new door window regulator as necessary. REFER to: Front Door Window Regulator Motor (501-11, Removal and Installation) / Rear Door Window Regulator Motor (501-11, Removal and Installation). **No** Repair the wiring harness. Test the system for normal operation. If the concern continues, install a new door window regulator as necessary. REFER to: Front Door Window Regulator Motor (501-11, Removal and Installation) / Rear Door Window Regulator Motor (501-11, Removal and Installation).

PINPOINT TEST E : WIND NOISE BETWEEN THE DOOR WINDOW GLASS AND SEAL	
TEST CONDITIONS	DETAILS/RESULTS/ACTIONS
E1: CHECK THAT THE DOOR WINDOW GLASS SEAL IS FREE FROM FOREIGN MATERIAL	
	1 Check for any foreign material or obstruction in the door window glass seal.
	Is the door window glass seal free from foreign material? **Yes** GO to E2.

PINPOINT TEST E : WIND NOISE BETWEEN THE DOOR WINDOW GLASS AND SEAL	
	No Remove any foreign material from door window glass seal and lubricate the seal. Test the system for normal operation.
E2: CHECK THAT THE DOOR WINDOW GLASS SEAL IS INSTALLED CORRECTLY	
	1 Check that the door window glass seal is installed correctly.
	Is the door window glass seal installed correctly? **Yes** GO to E3. **No** Install the door window glass seal correctly. Test the system for normal operation.
E3: CHECK THAT THE DOOR WINDOW GLASS SEAL IS NOT WORN IN THE CHANNELS	
	1 Visually check that the door window glass seal is not worn in the door channels.
	Is the door window glass seal worn in the channels? **Yes** Install a new door window glass seal as necessary. Test the system for normal operation. **No** GO to E4.
E4: CHECK THE DOOR WINDOW REGULATOR INTEGRITY	
	1 Visually inspect the cables, rollers and rail sliders for foreign material.
	Are the cables, rollers and rail sliders free from foreign material? **Yes** GO to E5. **No** Remove any foreign material. Test the system for normal operation. If the concern persists, install a new door window regulator as necessary. REFER to: Front Door Window Regulator Motor (501-11, Removal and Installation) / Rear Door Window Regulator Motor (501-11, Removal and Installation).
E5: CHECK THE VOLTAGE TO THE DOOR WINDOW REGULATOR MOTOR	

PINPOINT TEST E : WIND NOISE BETWEEN THE DOOR WINDOW GLASS AND SEAL	
	1 Using a multimeter, check the voltage to the door window regulator motor.
	Is the voltage greater than 10 volts? **Yes** Adjust the door window glass referring to the door glass setting procedure in this procedure. **No** Repair the wiring harness. Test the system for normal operation.

PINPOINT TEST F : FRONT DOOR WINDOW GLASS BOUNCE BACK	
TEST CONDITIONS	DETAILS/RESULTS/ACTIONS
F1: CHECK WINDOW MOTOR INITIALIZATION	
	1 Initialize the door window motor. REFER to: Door Window Motor Initialization (501-11, General Procedures).
	Did the initialization work? **Yes** Test the system for normal operation. **No** GO to F2.
F2: CHECK THAT THE DOOR WINDOW GLASS SEAL IS FREE FROM FOREIGN MATERIAL	
	1 Check for any foreign material or obstruction in the door window glass seal.
	Is the door window glass seal free from foreign material? **Yes** GO to F3. **No** Remove any foreign material from door window glass seal and lubricate the seal. Test the system for normal operation.
F3: CHECK THAT THE DOOR WINDOW GLASS SEAL IS INSTALLED CORRECTLY	
	1 Check that the door window glass seal is installed correctly.
	Is the door window glass seal installed correctly? **Yes** GO to F4.

PINPOINT TEST F : FRONT DOOR WINDOW GLASS BOUNCE BACK	
	No Install the door window glass seal correctly. Test the system for normal operation.
F4: CHECK THAT THE DOOR WINDOW GLASS SEAL IS NOT WORN IN THE CHANNELS	
	1 Visually check that the door window glass seal is not worn in the door channels.
	Is the door window glass seal worn in the channels? **Yes** Install a new door window glass seal as necessary. Test the system for normal operation. **No** GO to F5.
F5: CHECK THE DOOR WINDOW GLASS IS SECURE	
	1 Remove the door window glass outer waist seal.
	2 Check if the door glass installed correctly and secured to the door window regulator.
	Is the door window glass correctly installed and secure? **Yes** Test the system for normal operation. **No** Adust the door window glass referring to the door glass setting procedure in this procedure. Test the system for normal operation. If the concern persists, install a new door window regulator as necessary. REFER to: Front Door Window Regulator Motor (501-11, Removal and Installation).

DOOR GLASS SETTING PROCEDURE

NOTE:

Make sure that this procedure is carried out if any concern is with noise or if directed by a pinpoint test.

1. Remove the door trim panel as necessary.
REFER to: Front Door Trim Panel (501-05, Removal and

Installation) /
Rear Door Trim Panel (501-05, Removal and Installation).

2. Release but do not remove the door window glass retaining clip(s) bolt(s).

3. Operate the window switch up and down seven times to make sure that the door window glass is correctly installed to the door window seal.

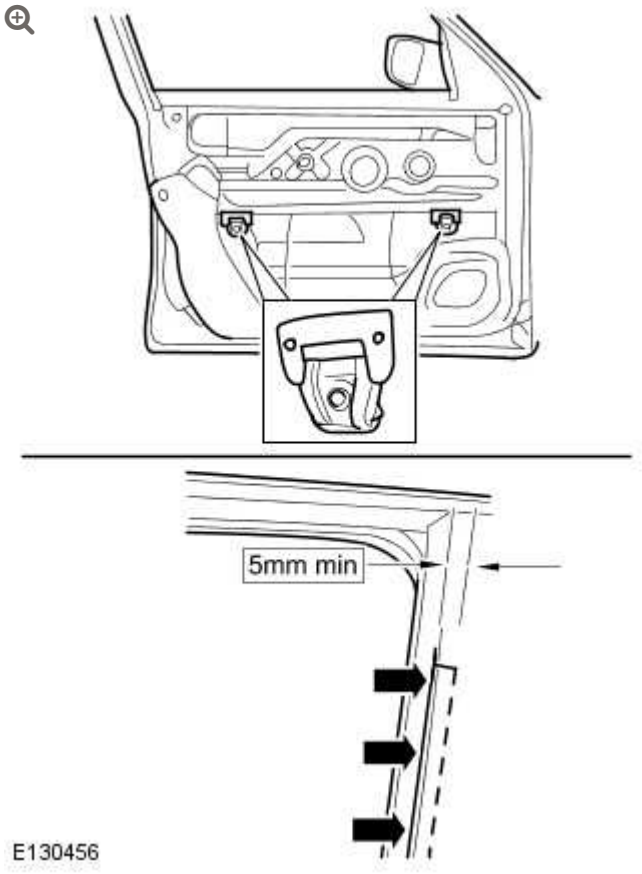

NOTE:

Make sure that the retaining clips are installed as illustrated.

4. Install the door window glass to the retaining clips, first to the front retaining clip and then to the rear.

5. Push the door window glass to the rear of the door to make sure correct installation in to the door window glass seal.

NOTE:

Tighten the rear retaining clip bolt first then the front bolt.

6. Tighten the door window glass retaining clip bolts to 10 Nm.

NOTE:

Make sure that there is a minimum of 5mm engagement of the door window glass to the rear door channel when the door window glass is fully closed.

7. Check the system for normal operation.

2012.0 RANGE ROVER (LM), 501-11

GLASS, FRAMES AND MECHANISMS

DESCRIPTION AND OPERATION

COMPONENT LOCATION – SHEET 1 OF 2

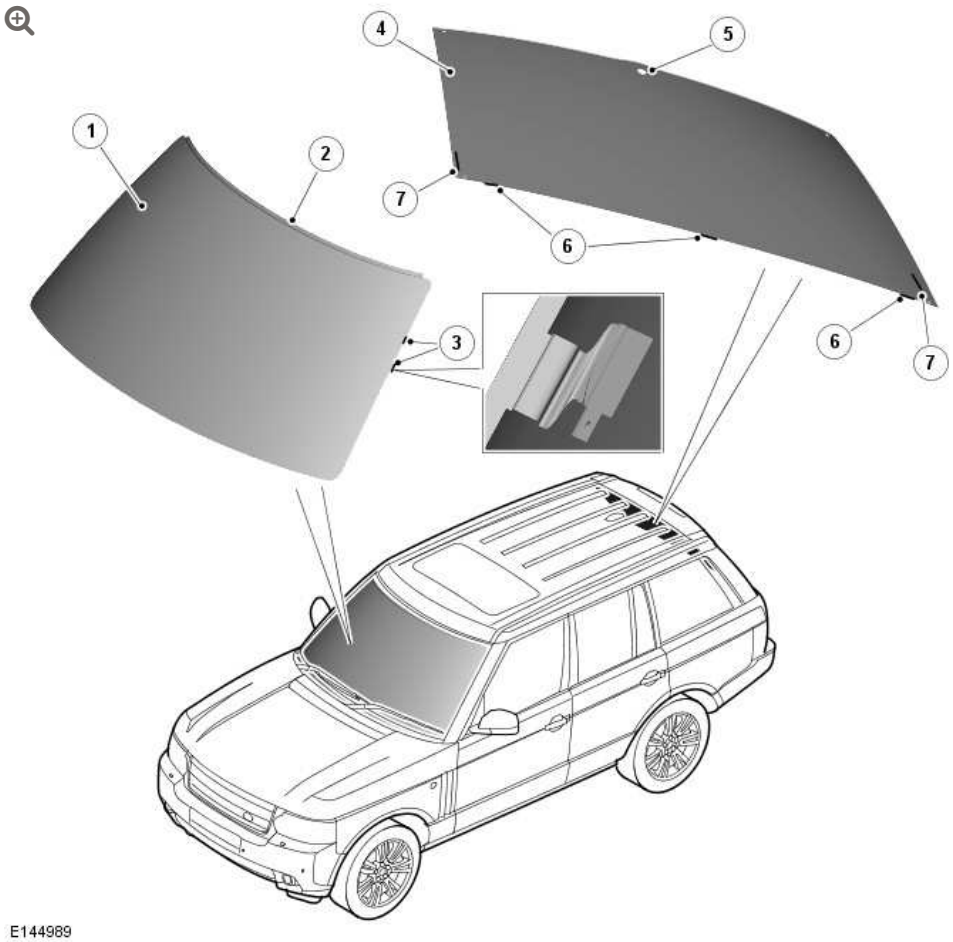

ITEM	DESCRIPTION

ITEM	DESCRIPTION
1	Windshield
2	Finisher
3	Heated windshield connectors
4	Rear window
5	Rear wiper motor aperture
6	Spacers
7	Heated rear window connectors

COMPONENT LOCATION - SHEET 2 OF 2

NOTE:

RHD (right-hand drive) shown, LHD (left-hand drive) similar.

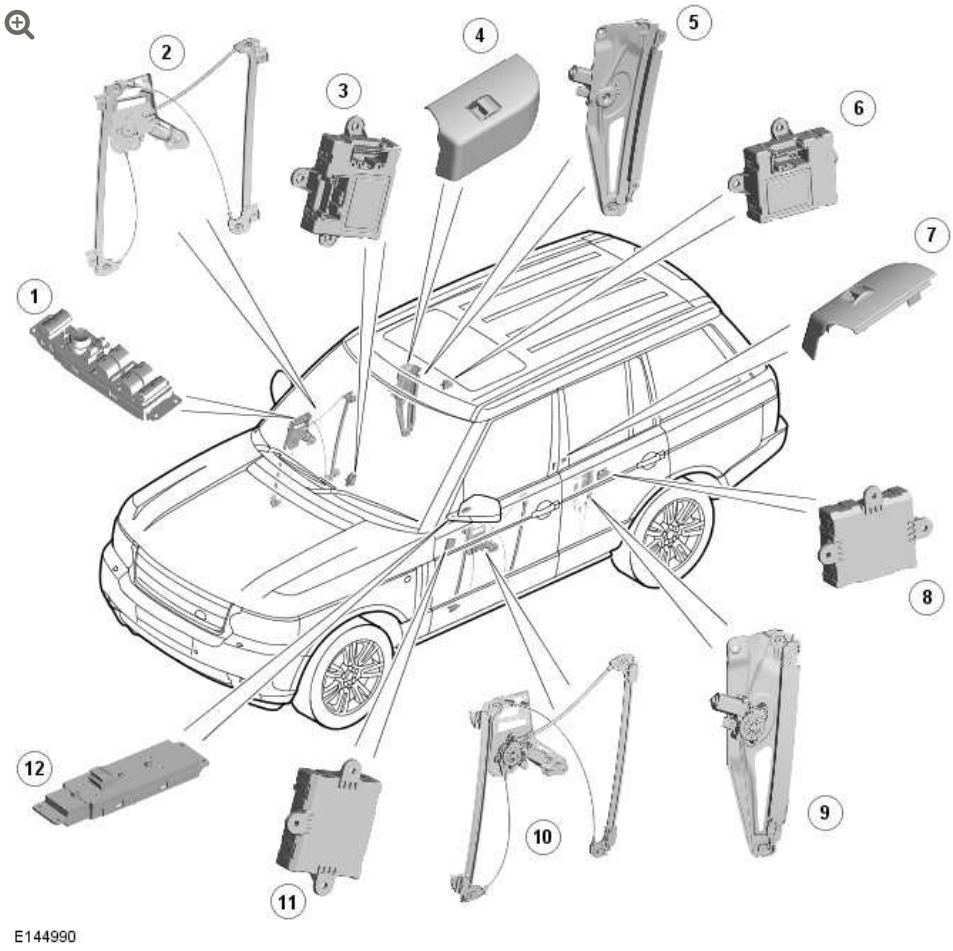

ITEM	DESCRIPTION
1	Driver window switches
2	Driver window regulator
3	DDM (driver door module)
4	RH (right-hand) rear window switch
5	RH rear window regulator
6	RHRDM (rear door module)
7	LH (left-hand) rear window switch
8	LHRDM
9	LH rear window regulator
10	Front passenger window regulator
11	PDM (passenger door module)
12	Front passenger window switch

ITEM	DESCRIPTION

GENERAL

WINDSHIELD

The laminated windshield is bonded and sealed to the body aperture using PU sealant. Heat bonded to the inner surface of the screen is the optical unit for the rain sensor and the interior mirror mounting boss.

Vertical fine-wire multi-strand elements are fitted between the glass laminations to de-ice and demist the screen. At the bottom of the screen ten horizontal heating elements bonded to the interior glass surface prevent the wiper blades freezing to the screen during adverse weather conditions.

The screen is supplied with the heating element flat foil connectors fitted to a sealed terminal block. This terminal block is wired to a connector for connecting to the vehicle harness.

REAR WINDOW

The tempered glass rear window is bonded to the upper tail doorframe using PU sealant. Fitted to the inner surface of the rear window are the heating elements and antennas.

The heating element is connected by two Lucar terminals while the antennas are connected to the vehicle by a twin and single stud connectors.

ELECTRIC WINDOWS

Electric windows are installed in all four doors. All of the electric windows incorporate one-shot up, one-shot down and anti-trap features.

In each door, the window is operated by a regulator, which is controlled by the related door module in response to inputs from window switches. The door modules also operate the windows in response to inputs from the CJB (central junction box) for global opening and closing.

WINDOW SWITCHES

Driver Window Switches



Passenger Window Switch



Individual window switches are installed in each of the three passenger doors. Window switches for all of the windows and a rear window isolation switch are installed in the driver door switchpack in the top surface of the door trim.

All window switches are of the non-latching rocker type. The switches have two switching positions in each direction, inch up/down and one-shot up/down. Operating the switch to the second detent position will activate the one-shot feature.

The driver door switchpack is powered by a permanent battery feed from the CJB. When the switches in the driver door switchpack are used, the switchpack translates the switch movement into a LIN (local interconnect network) bus message. A LIN bus connects the driver door switchpack to the driver door module and the driver side RDM. Each passenger window switch is hardwired into circuits with the related door module.

DOOR MODULES

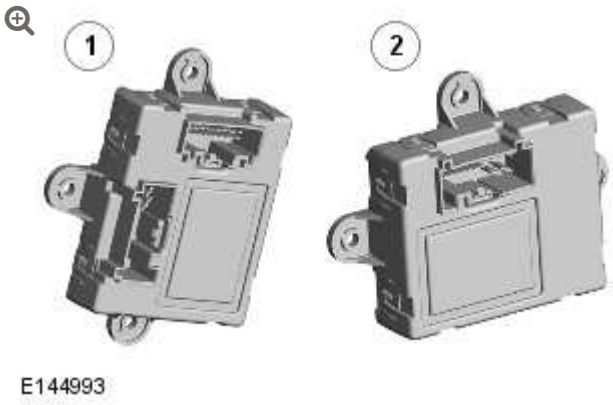

E144993

ITEM	DESCRIPTION
1	Front door module
2	Rear door module

In addition to controlling the window lift system, the front door modules also control:

- Door locking.
  For additional information, refer to: Handles, Locks, Latches and Entry Systems (501-14 Handles, Locks, Latches and Entry Systems,

Description and Operation).

.

- Door mirror adjustment and heating.
  For additional information, refer to: Rear View Mirrors (501-09 Rear View Mirrors, Description and Operation).
- Door mirror lamps.
  For additional information, refer to: Interior Lighting - Ultimate (417-02 Interior Lighting, Description and Operation).

The rear door modules control window lift and door locking only.

The door modules are color coded for position on the vehicle. The driver door module and both rear door modules are black. The passenger door module is gray. The electrical wiring harness connectors are also color coded to match the door modules.

NOTE:

Both rear door modules are identical.

If a front door module develops a fault, a DTC (diagnostic trouble code) is stored in its memory. The DTC can be read using the Land Rover approved diagnostic system. If either of the rear door modules develops a fault, the DTC is stored in the respective front door module.

WINDOW REGULATORS

FRONT WINDOW REGULATORS

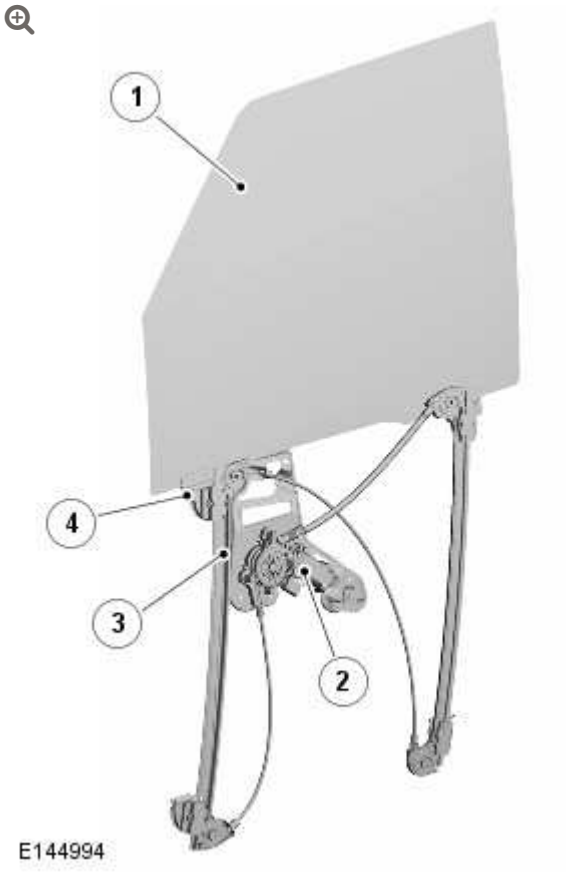

ITEM	DESCRIPTION
1	Window Glass
2	Window motor
3	Mounting frame
4	Glass carrier

The front window regulator and motor is supplied as an assembly and is handed. Each assembly comprises a front and rear runner, a continuous cable and a motor.

The runners are secured in the door frame with five bolts. The door glass is located in two carriers, which are located in tracks in the runners. The glass is retained in friction pads in each carrier and secured with clamp bolts.

Each carrier is attached to the cable which, in turn, is attached to a drum driven by the motor. When the motor is operated the drum pulls the cable in the required direction to raise or lower the glass.

REAR WINDOW REGULATORS

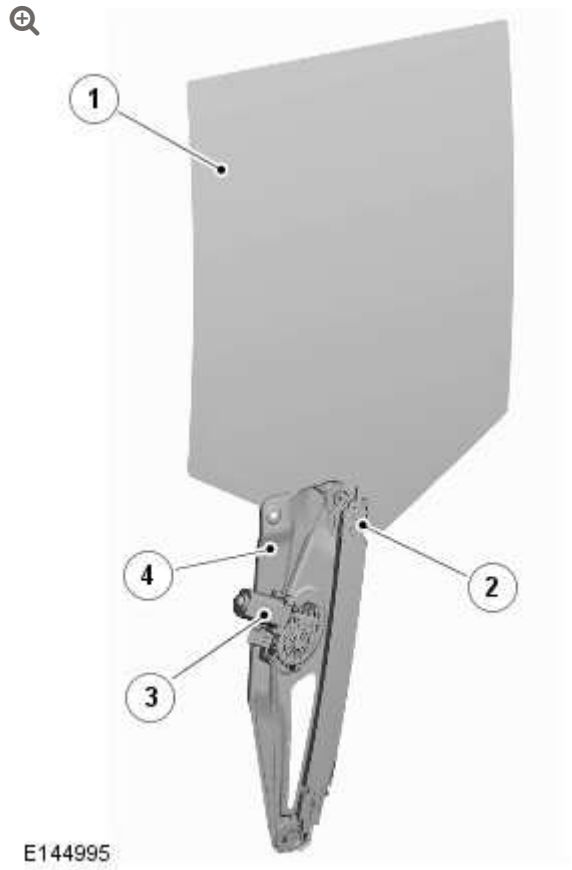

ITEM	DESCRIPTION
1	Window Glass
2	Glass carrier
3	Window motor
4	Mounting frame

The rear window regulator and motor is supplied as an assembly and is handed. Each assembly comprises a runner, a continuous cable and a motor.

The runner is secured in the door frame with three bolts. The door glass is located in a carrier located in a track in the runner. The glass is retained in friction pads in the carrier and secured with a clamp bolt.

The carrier is attached to the cable which, in turn, is attached to a drum driven by the motor. When the motor is operated, the drum pulls the cable in the required direction to raise or lower the glass.

OPERATION

The electric windows will operate in power modes 6 (ignition on) and 7 (engine running), and for five minutes after the ignition is switched off provided none of the doors are opened.

When a window open or closed selection is made, the related door module supplies power to the window motor to drive it in the appropriate direction. In the inch mode, the motor stops when the switch is released or the window reaches the end of its travel. In the one-shot mode, the motor stops when if the switch is operated again (either up or down) or the window reaches the end of its travel.

When the passenger window switches are used, they produce an open or close request by completing a circuit with the related door module.

When the driver window switches are used, the driver door switchpack outputs a request message for the appropriate door module on the LIN bus. If the message is for a door module on the opposite side of the vehicle to the driver, the DDM relays the message to the PDM on the medium speed CAN (controller area network) bus. If necessary, the PDM then sends a LIN bus message to the RDM on its side of the vehicle.

If any of the passenger windows have opposing up and down requests from two separate switches, for example, a passenger

window switch and the related window switch on the driver door switchpack, then the operation of that window will cease, until one or both of the switches are released.

While the isolator switch engaged, the switch tell-tale is illuminated and the rear door modules ignore requests from their related passenger window switches.

Global opening and closing requests are output from the CJB on the medium speed CAN bus. The DDM and the PDM then relay the request to their respective RDM.

ONE-SHOT WINDOW OPERATION RESET

If the battery is disconnected or discharged, or the power supply to a door module is interrupted, one-shot window operation is disabled until the window position is re-established by the affected door module(s). To reset one-shot window operation:

1. Close the window fully.
2. Release the switch, then pull up and hold the switch for one second.
3. If necessary, repeat the procedure for the other windows.

ANTI-TRAP PROTECTION

The anti-trap feature is incorporated for all of the door windows in both the inching and one-shot modes. If the anti-trap function is activated while a window is closing, the window motor reverses for 0.5 second.

Each window motor has a Hall sensor to enable the related door module to monitor the motor speed. If the motor speed decreases below a set threshold, indicating an obstruction, the power feed to the motor is reversed so the window goes back down.

If it is still necessary to raise the window, the anti-trap protection can be overridden by attempting to close the window at intervals of less

than 10 seconds. On the third attempt the window will move up with increased force to try and overcome the obstruction. If the obstruction cannot be overcome, one-shot operation is disabled.

WINDOW CONTROL DIAGRAM

NOTE:

A = Hardwired, **N** = Medium speed CAN bus; **O** = LIN bus.

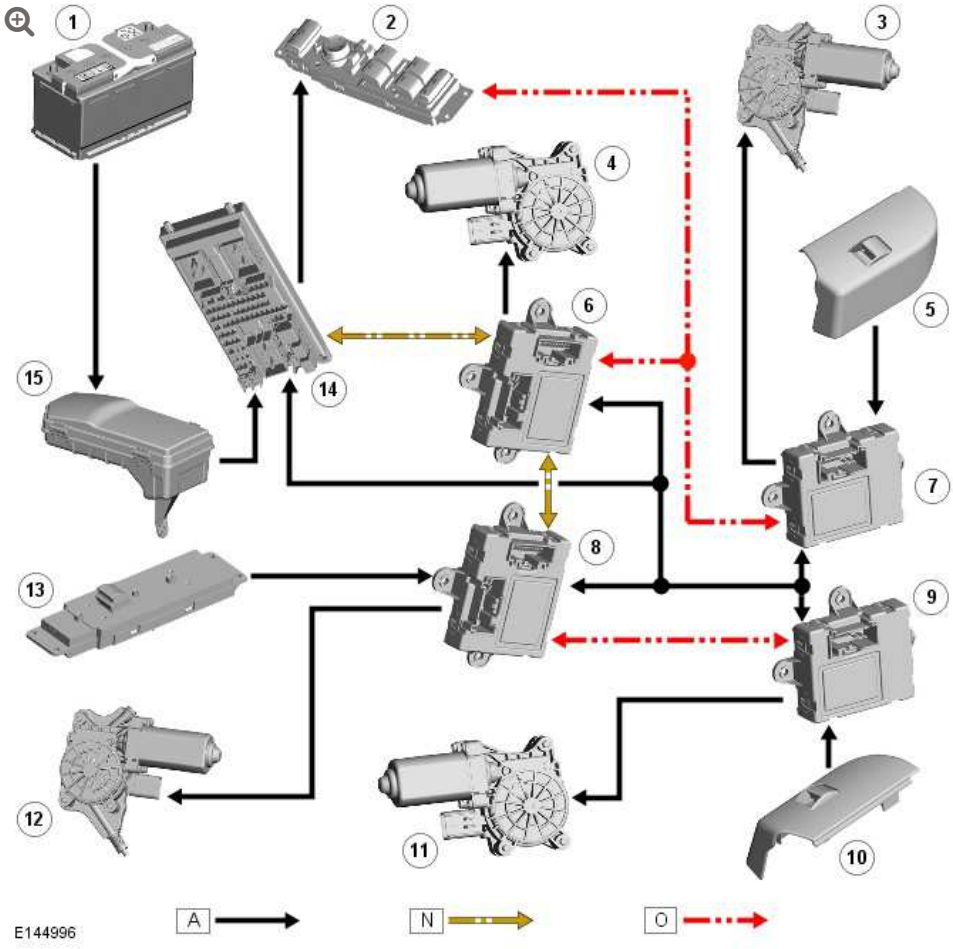

ITEM	DESCRIPTION
1	Battery
2	Driver door switch pack
3	Rear door glass motor

ITEM	DESCRIPTION
4	Driver door glass motor
5	Rear door window lift switch
6	DDM
7	RDM
8	PDM
9	RDM
10	Rear door window lift switch
11	Rear door glass motor
12	Passenger door glass motor
13	Passenger door window lift switch
14	CJB
15	EJB (engine junction box)

GLASS, FRAMES AND MECHANISMS

LIFTGATE WINDOW GLASS

(G927834)

REMOVAL AND INSTALLATION

76.31.22	GLASS/SEALING RUBBER - TAILGATE/DOOR - RENEW	ALL DERIVATIVES	2	USED WITHINS	+

REMOVAL

NOTE:

The following equipment is required: Cutting wire and handles. Reciprocating cutting knife. Glazing knife. Windshield glass replacement kit. Sealant applicator. Suction cups. Felt covered table or a felt covered glazing support stand.

1. Remove the rear window wiper pivot arm.
   For additional information, refer to: Rear Window Wiper Pivot Arm (501-16 Wipers and Washers, Removal and Installation).

2.

Remove the liftgate lower trim panel.
For additional information, refer to: Liftgate Lower Trim Panel (501-05 Interior Trim and Ornamentation, Removal and Installation).

3. Remove the liftgate LH and RH inner side trim panels.

4. Remove the liftgate window glass outer finisher trim panel.

5. 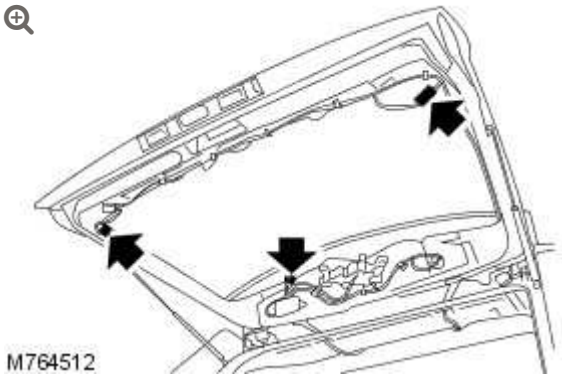

Disconnect the 3 electrical connectors from the liftgate window glass.

6. Apply protection to the exterior paintwork, adjacent to the liftgate window glass.

7. 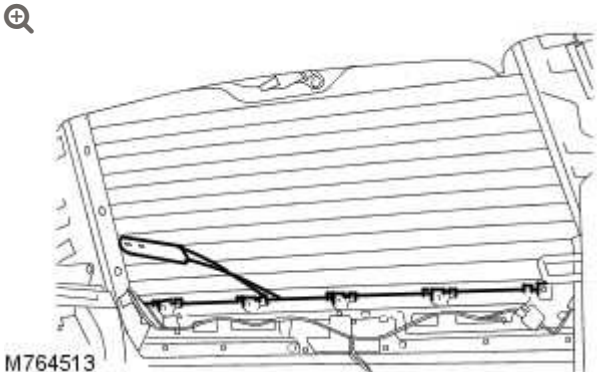

Using a glazing knife, cut through the lower edge of the liftgate window glass sealant from the inside.

- Do not use the oscillating type of glazing knife, as the Liftgate window glass is very close to the liftgate.

8. Cut through the remaining top and sides of the liftgate window glass sealant, using the cutting wire method as required.
   - Use of a reciprocating flat blade glazing knife is permissible.

9. **CAUTION:**

   Lay the glass on felt covered supports. Do not stand on edge as this can cause chips which subsequently develop into cracks.

   With assistance, remove the liftgate window glass.
   - Attach suction cups to aid liftgate window glass removal.

10. 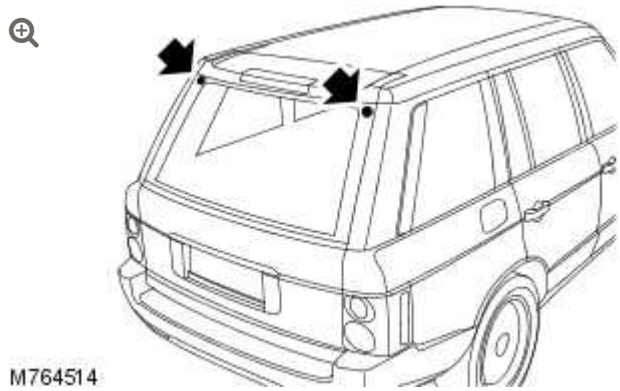

    Remove the 2 liftgate window glass support blocks from the liftgate.

11. Remove the liftgate window glass sealant from the liftgate.
    - Make sure when the sealant has been removed that the finished surface is clean and smooth.

12. Remove liftgate window glass sealant from the liftgate window glass.
    - Make sure when the sealant has been removed, that the surface is clean and smooth and without damage to the obscuration band.

INSTALLATION

1. Install the finisher trim to the liftgate window glass.

2. Install the liftgate window glass support blocks to the liftgate.

3. 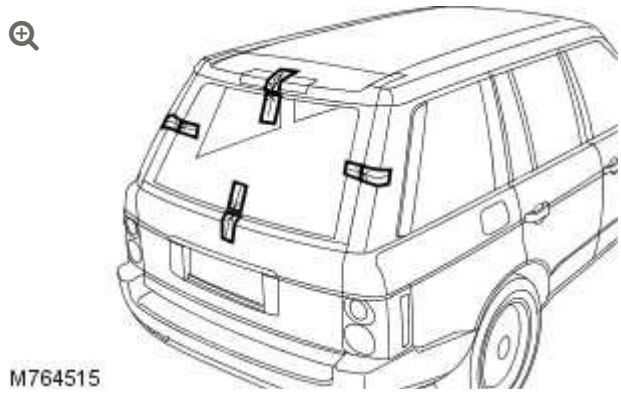

   With assistance, install the liftgate window glass and centralize in the liftgate aperture.
   - Use masking tape to establish reference marks and to aid as an alignment guide.
   - Attach suction cups to aid alignment and install.

4. With assistance, remove the liftgate window glass and place on the felt covered supports.

5. Using the recommended solvent, clean the sealant mating faces of the liftgate and the liftgate window glass.

6. Apply etch primer to any liftgate bare metal.

7. **CAUTION:**

   Correct preparation of body apertures “post painting” to ensure satisfactory glass adhesion, must be carried out in line with industry practise.

   Apply primer over the previously applied etch primer.

8. Apply glass primer to the sealant mating face of the liftgate window glass and allow to cure.

9. Apply activator over the old sealant on the liftgate and allow to cure.

10. Install the pre-cut nozzle to sealant cartridge and remove the lid and shake out the crystals, followed by installing the cartridge to the applicator tool.
    - If necessary, modify the nozzle to achieve the required bead section.

11.

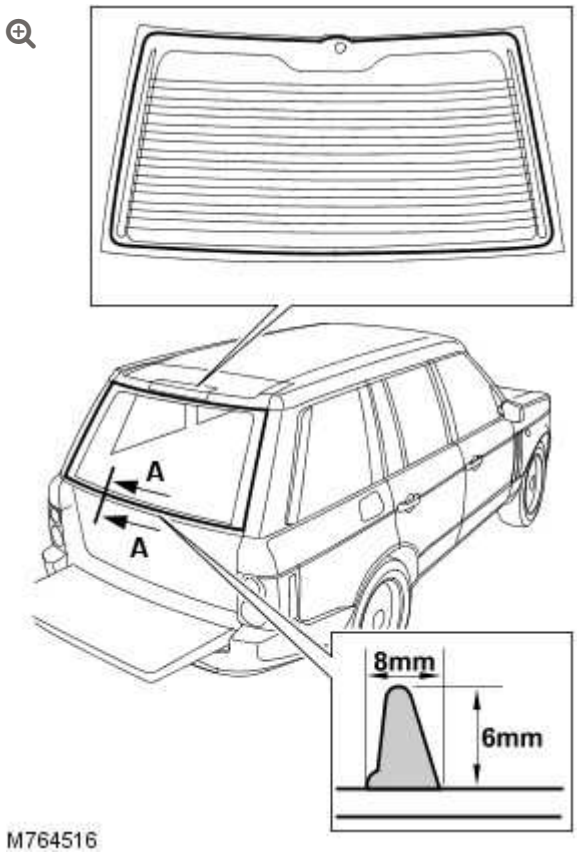

Apply a continuous bead of sealant to the liftgate window glass as shown.

12. With assistance, install and align the liftgate window glass.
    - Lightly press the liftgate window glass to seat the sealant.

13. Remove the masking tape and exterior paintwork protection.

14. Connect the liftgate window glass electrical connectors.

15. Test the liftgate window glass sealant for leaks.
    - If water is used as a means for the leak check, then allow sealant to dry before testing.
    - Spray water around the liftgate window glass, mark any area that leaks. Dry the liftgate window glass and sealant before applying additional sealant.

16. Install the liftgate LH and RH inner side trim panels.

17. Install the liftgate lower trim panel.
    For additional information, refer to: Liftgate Lower Trim Panel (501-05 Interior Trim and Ornamentation, Removal and Installation).

18. Install the rear window wiper pivot arm.
    For additional information, refer to: Rear Window Wiper Pivot Arm (501-16 Wipers and Washers, Removal and Installation).

REAR DOOR FIXED WINDOW GLASS (G1061679)

REMOVAL AND INSTALLATION

76.31.31	QUARTER LIGHT - FIXED - REAR DOOR - RENEW	ALL DERIVATIVES	1.3	USED WITHINS	+

REMOVAL

1. Remove the rear door window glass.
   For additional information, refer to: Rear Door Window Glass (501-11 Glass, Frames and Mechanisms, Removal and Installation).

2.

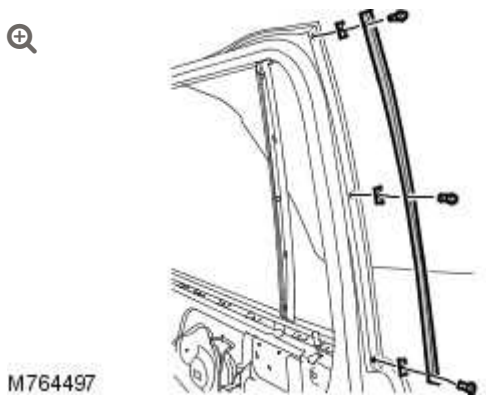

Remove the rear door frame trim panel.

- Remove the 3 screws.
- Remove the 3 clips.

3. Remove the rear door upper trim panel.

4. 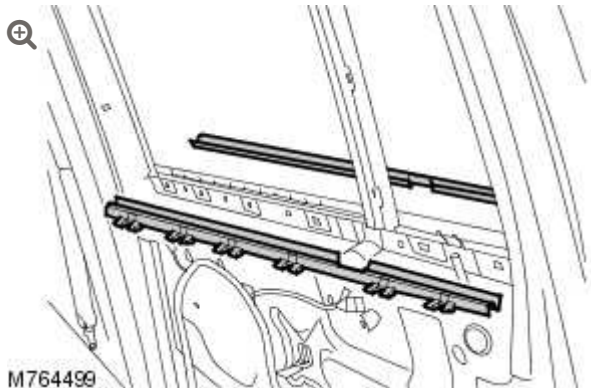

Remove the rear door glass outer waist seal.

5. Remove the rear door glass inner waist seal.

6.



Remove the rear quarter window glass trim panel.

7.

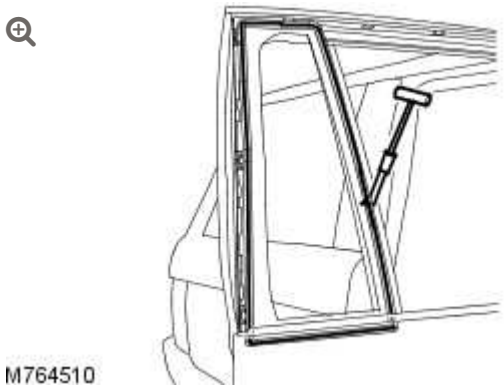

Remove the rear quarter window glass.

- Carefully cut through the sealant using a glazing knife.

INSTALLATION

1. Carefully remove the sealant from the door frame to leave a smooth surface.

2. Carefully remove the sealant from the rear quarter window glass, without damaging the obscuration band.

3. Clean the component mating faces.

4.

CAUTION:

> Correct preparation of body apertures “post painting” to ensure satisfactory glass adhesion, must be carried out in line with industry practise.

Apply etch primer to any bare metal.

5. Apply primer over the etch primer.

6. Fit pre-cut nozzle to sealer cartridge, remove lid, shake out crystals and fit cartridge to applicator gun. If necessary modify the nozzle to achieve required bead section.

7. 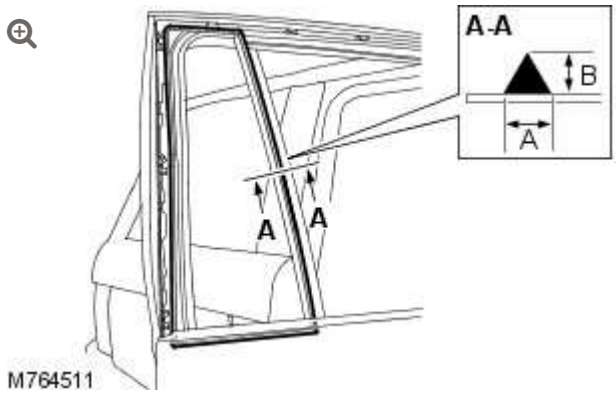

Apply a continuous bead of sealant to the door frame. Dimension A = 7mm (0.28 in). Dimension B = 11 mm (0.44 in).

8. With assistance, install and align the rear quarter window glass.

9. Install the rear quarter window glass trim panel.

10. Install the rear door glass inner waist seal.

11. Install the rear door glass outer waist seal.

12. Install the rear door upper trim panel.

13. Install the rear door frame trim panel.
    - Install the 3 clips.
    - Install the 3 screws.

14. Install the rear door window glass.
    For additional information, refer to: Rear Door Window Glass (501-11 Glass, Frames and Mechanisms, Removal and Installation).

15. Test the sealer for leaks, apply additional sealer if necessary. If water is used, allow sealer to dry before testing. Spray water around the glass and check for leaks. Mark any area that leaks. Dry the glass and sealer then apply additional sealer.

GLASS, FRAMES AND MECHANISMS

REAR DOOR WINDOW GLASS (G916876)

REMOVAL AND INSTALLATION

76.31.02	GLASS - REAR DOOR - RENEW	ALL DERIVATIVES	0.5	USED WITHINS	+

REMOVAL

1. Lower the rear door window glass.

2. Remove the rear door trim panel.
   For additional information, refer to: Rear Door Trim Panel (501-05, Removal and Installation).

3. Disconnect the door speaker electrical connector.

4. Remove the rear door inner weathershield.

5.

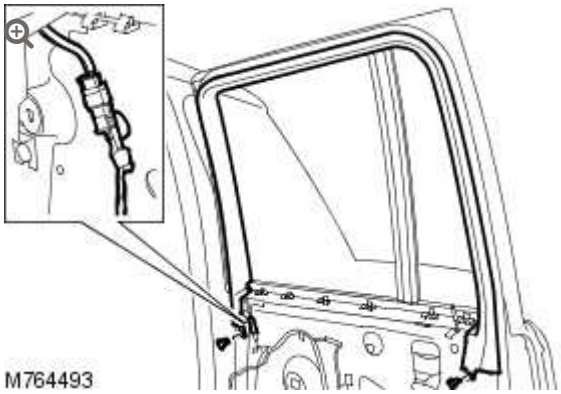

Remove the rear door upper trim panel.

- Release the 2 clips.
- Disconnect the electrical connector.

6.

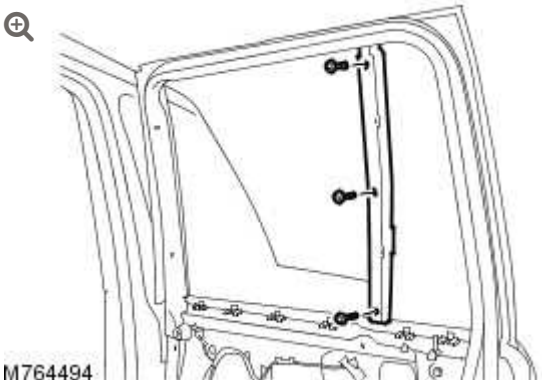

Remove the rear window glass guide channel.

- Remove the 3 screws.

7.

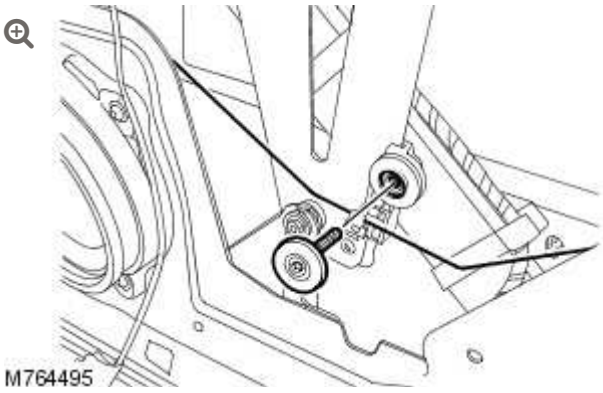

Remove the rear door window glass.

- Remove the bolt.

INSTALLATION

1. Install the rear door window glass.
   - Install the bolt and tighten to 10 Nm (7 lb.ft).
2. Install the rear window glass guide channel.
   - Install the 3 screws.
   - Install the seal.
3. Install the rear door upper trim panel.
   - Connect the electrical connector.
4. Connect the door speaker electrical connector.
5. Install the rear door inner weathershield.
6. Check correct operation of the rear door window glass.
7. Install the rear door trim panel.
   For additional information, refer to: Rear Door Trim Panel (501-05, Removal and Installation).

REAR DOOR WINDOW REGULATOR MOTOR (G916883)

REMOVAL AND INSTALLATION

REMOVAL

1. Remove the rear door window glass.
   For additional information, refer to: Rear Door Window Glass (501-11, Removal and Installation).

2. 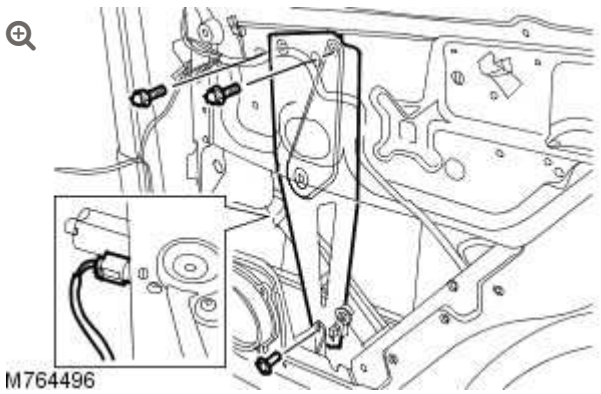

   Remove the rear door window regulator and motor.

   - Disconnect the electrical connector.
   - Remove and discard the lower bolt.
   - Remove the 2 upper bolts.

INSTALLATION

1. Install the rear door window regulator and motor.
   - Remove the two clips from the rear door window regulator and motor.
   - Tighten the 2 upper bolts to 10 Nm (7 lb.ft).
   - Tighten the new bolt to 10 Nm (7 lb.ft).
2. Connect the rear door window glass regulator and motor electrical connector.
3. Install the rear door window glass.
   For additional information, refer to: Rear Door Window Glass (501-11, Removal and Installation).

GLASS, FRAMES AND MECHANISMS

REAR QUARTER WINDOW GLASS (G916877)

REMOVAL AND INSTALLATION

76.81.20	GLASS/SEALING RUBBER - QUARTER LIGHT - REAR - RENEW	ALL DERIVATIVES	1.5	USED WITHINS	+

REMOVAL

NOTE:

The following equipment is required: Cutting wire and handles. Reciprocating cutting knife. Glazing knife. Glass replacement kit. Sealant applicator. Suction cups. Felt covered table or a felt covered glazing support stand.

1. Remove the rear quarter panel moulding.
   For additional information, refer to: Rear Quarter Panel Moulding (501-08 Exterior Trim and Ornamentation, Removal and Installation).

2. Remove the access panel from the loadspace trim panel.

3.

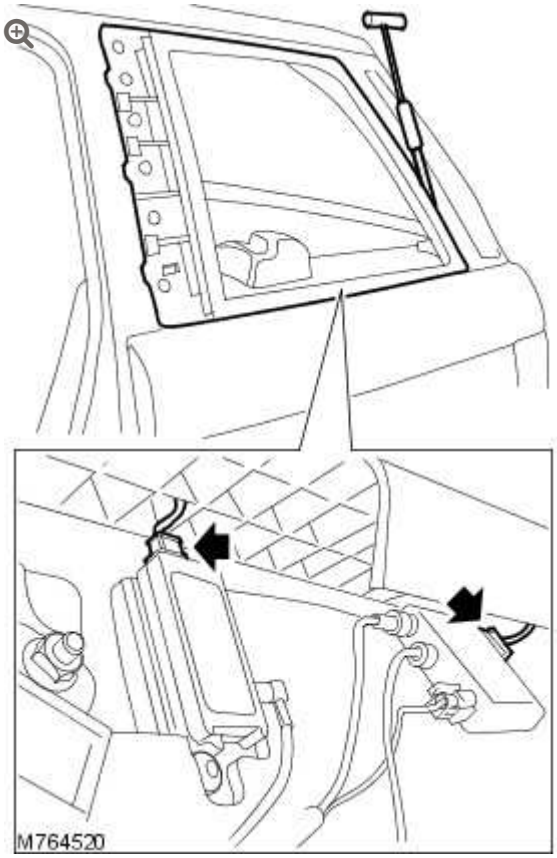

Disconnect the antenna module electrical connector.

4. Apply protection to the exterior paintwork, adjacent to the rear quarter window glass.

5. Apply protection to the internal trim, adjacent to the rear quarter window glass.

6. Remove the upper and lower rear quarter window glass finishers.
   - Cut through the bonded finishers, to gain access to the rear quarter window glass sealant.

7. Cut through the rear quarter window glass sealant from the outside.
   - Use of a reciprocating flat blade glazing knife is permissible.

8. If required, use a glazing cutting wire to remove any remaining sealant.

9. Remove the rear quarter window glass.

10. Remove the sealant from the rear quarter window glass aperture.
    - Make sure when the sealant has been removed that the finished surface is clean and smooth.

INSTALLATION

1. Using the recommended solvent, clean the mating face of the rear quarter window glass aperture.

2. **CAUTION:**

   Correct preparation of body apertures “post painting” to ensure satisfactory glass adhesion, must be carried out in line with industry practise.

   Apply etch primer to any bare metal.

3. Apply primer over the etch primer.

4. Apply glass primer to the sealant face of the rear quarter window glass and allow to cure.

5. Apply activator over the old sealant on the rear quarter window glass aperture and allow to cure.

6.

Install the pre-cut nozzle to sealant cartridge and remove the lid and shake out the crystals, followed by installing the cartridge to the applicator tool.

7.

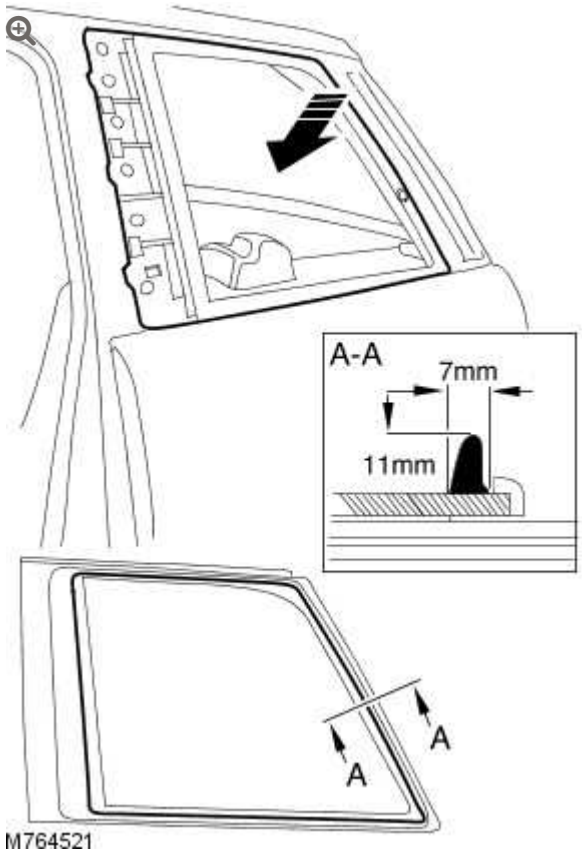

Apply a continuous bead of sealant to the rear quarter window glass as shown.

8. With assistance, install and align the rear quarter window glass.
   - Lightly press the rear quarter window glass into the rear quarter window glass aperture to seat the sealant.

9. Connect the antenna module electrical connector.

10. Install the access panel to the loadspace trim panel.

11. Remove the protection, from the interior and exterior rear quarter window glass area.

12. Test the sealer for leaks, apply additional sealer if necessary. If water is used, allow sealer to dry before testing. Spray water around the glass and check for leaks. Mark any area that leaks. Dry the glass and sealer then apply additional sealer.

13. Install the rear quarter panel moulding.
For additional information, refer to: Rear Quarter Panel Moulding (501-08 Exterior Trim and Ornamentation, Removal and Installation).

GLASS, FRAMES AND MECHANISMS

WINDSHIELD GLASS (G928164)

REMOVAL AND INSTALLATION

76.81.01	GLASS/SEALING RUBBER - WINDSHIELD - RENEW	ALL DERIVATIVES	1.7	USED WITHINS	+

REMOVAL

NOTE:

The following equipment is required: Cutting wire and handles. Reciprocating cutting knife. Glazing knife. Windshield glass replacement kit. Sealant applicator. Suction cups. Felt covered table or a felt covered glazing support stand.

1. Remove the roof mouldings.
   For additional information, refer to: Roof Moulding (501-08 Exterior Trim and Ornamentation, Removal and Installation).

2. Remove the windshield glass mouldings.
   For additional information, refer to: Windshield Moulding (501-11 Glass, Frames and Mechanisms, Removal and Installation).

3. Remove the cowl panel grille.
   For additional information, refer to: Cowl Panel Grille (501-02 Front End Body Panels, Removal and Installation).

4. Remove the interior rear view mirror.
   For additional information, refer to: Interior Rear View Mirror (501-09 Rear View Mirrors, Removal and Installation).

5. Remove the A-pillar trim panels.
   For additional information, refer to: A-Pillar Trim Panel (501-05 Interior Trim and Ornamentation, Removal and Installation).

6. 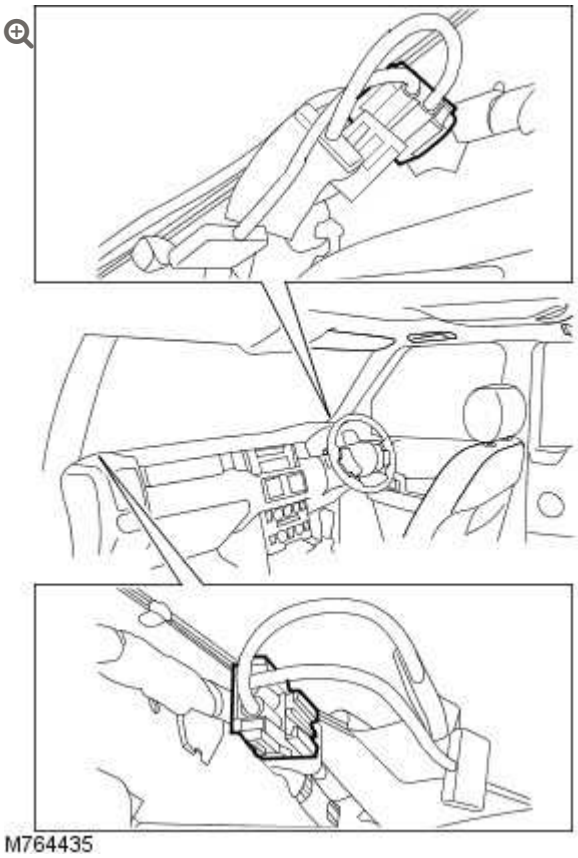
   M764435

   Disconnect the 2 electrical connectors from the heated windshield glass element.

7. Apply protection to the exterior paintwork, adjacent to the windshield glass.

8. Apply masking tape to the defroster ducts.

9. Apply protection to the instrument panel and interior of the vehicle.

10. 

Remove and discard the windshield glass upper moulding.

11. 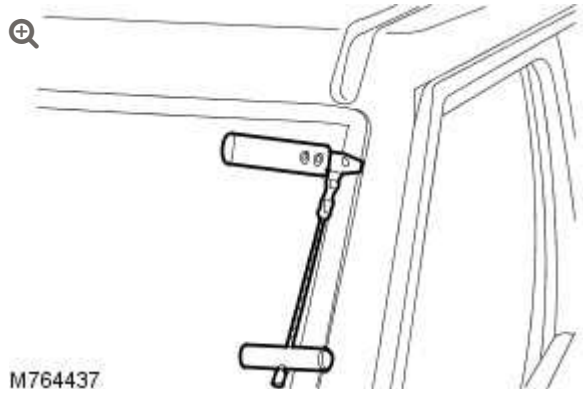

Using a flat blade cutting tool and working from the outside, cut through the windshield glass sealant securing both sides and the upper section.

- Use of a reciprocating flat blade glazing knife is permissible.
- If necessary use a cutting wire to cut through any remaining windshield glass sealant securing the sides and the upper section.

12.

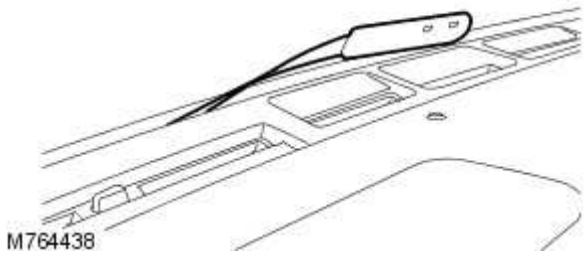

Working from the inside and using a glazing knife, cut through the windshield glass sealant securing the lower section.

- Use of a reciprocating flat blade glazing knife is permissible.

13.

CAUTION:

Lay the glass on felt covered supports. Do not stand on edge as this can cause chips which subsequently develop into cracks.

With assistance, remove the windshield glass.

- Use suction cups to aid removal.

14.

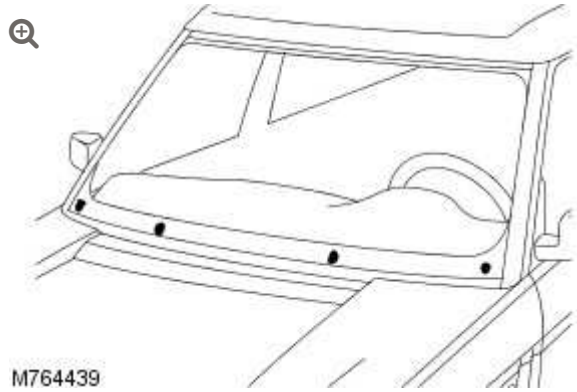

Remove the 4 windshield glass support blocks from the vehicle body.

15. Remove the windshield glass sealant from the vehicle body.
    - Make sure when the sealant has been removed that the finished surface is clean and smooth.

16. Remove the windshield glass sealant from the windshield glass.
    - Make sure when the sealant has been removed, that the surface is clean and smooth and without damage to the obscuration band.

INSTALLATION

1. **CAUTION:**

   Make sure that a new windshield glass upper moulding is installed. Failure to follow this instruction may result in damage to the vehicle.

   Install the windshield glass upper moulding.

2.

Install the windshield glass support blocks to the vehicle body.

3. With assistance, install the windshield glass and centralize in the vehicle body aperture.

4. 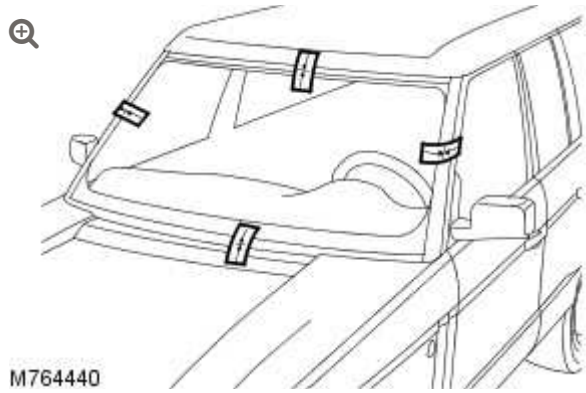

Use masking tape to establish reference marks and to aid as an alignment guide.

5. With assistance, remove the windshield glass.

6. Using the recommended solvent, clean the mating faces of the vehicle body windshield glass aperture and windshield glass.

7. **CAUTION:**

> Correct preparation of body apertures “post painting” to ensure satisfactory glass adhesion, must be carried out in line with industry practise.

Apply etch primer to the vehicle body windshield glass aperture.

8. Apply primer over the previously applied etch primer.

9. Apply glass primer to the sealant mating face of the windshield glass and allow to cure.

10. Apply activator over the old sealant on the vehicle body windshield glass aperture and allow to cure.

11. Install the pre-cut nozzle to sealant cartridge and remove the lid and shake out the crystals, followed by installing the cartridge to the applicator tool.

12. 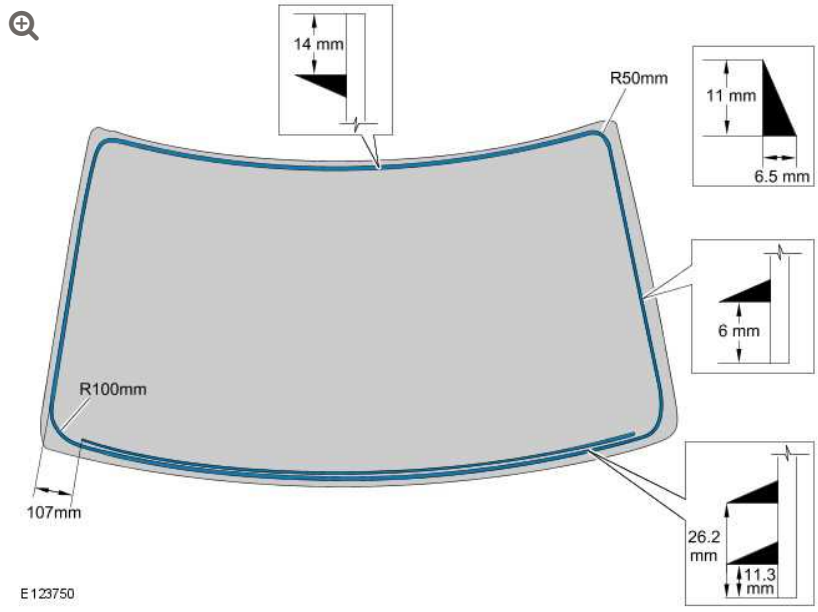

Apply a continuous bead of sealant to the windshield glass as shown.

13. **CAUTION:**

Make sure that the deck height of the windshield glass is 11mm along both A-pillars. Failure to follow this instruction may result in damage to the vehicle.

With assistance, install and align the windshield glass.

- Lightly press the windshield glass to seat the sealant.

14. Remove the masking tape and exterior paintwork protection.

15. Test the windshield glass sealant for leaks.
    - If water is used as a means for the leak check, then allow sealant to dry before testing.
    - Spray water around the windshield glass, mark any area that leaks. Dry the windshield glass and sealant before applying additional sealant.

16. Connect the heated windshield glass element, electrical connectors.

17. Install the A-pillar trim panels.
    For additional information, refer to: A-Pillar Trim Panel (501-05 Interior Trim and Ornamentation, Removal and Installation).

18. Install the interior rear view mirror.
    For additional information, refer to: Interior Rear View Mirror (501-09 Rear View Mirrors, Removal and Installation).

19. Install the cowl panel grille.
    For additional information, refer to: Cowl Panel Grille (501-02 Front End Body Panels, Removal and Installation).

20. Install the windshield glass mouldings.
    For additional information, refer to: Windshield Moulding (501-11 Glass, Frames and Mechanisms, Removal and Installation).

21. Install the roof mouldings.
    For additional information, refer to: Roof Moulding (501-08 Exterior Trim and Ornamentation, Removal and Installation).

GLASS, FRAMES AND MECHANISMS

WINDSHIELD MOULDING

(G913864)

REMOVAL AND INSTALLATION

76.43.39	MOULDING - WINDSHIELD - SIDE - RENEW	ALL DERIVATIVES	0.1	USED WITHINS	+

REMOVAL

1. 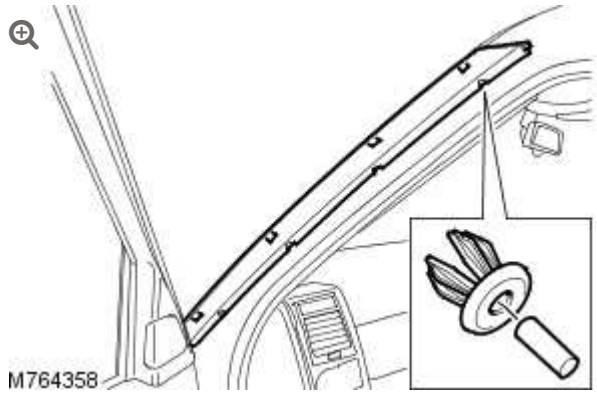

   Remove the 4 clips securing the windscreen moulding.

2. Remove the windshield moulding.
   - Release the 4 clips.

3. Remove and discard the 4 clips from the windshield moulding.

4. Remove and discard the 4 clips from the A-pillar.

INSTALLATION

1. Install new clips to the A-pillar.

2. Install new clips to the windshield moulding.

3. Install the windshield moulding.
    - Secure with the new clips.

INSTRUMENT PANEL AND CONSOLE

FLOOR CONSOLE – TDV8 3.6L DIESEL/V8 5.0L PETROL/V8 S/C 5.0L PETROL (G860310)

REMOVAL AND INSTALLATION

76.25.01	CONSOLE ASSEMBLY – FLOOR – RENEW	ALL DERIVATIVES	2	USED WITHINS	+

REMOVAL

1. Disconnect the battery ground cable.
   For additional information, refer to: Specifications (414-00 Charging System - General Information, Specifications).

2. Remove the LH front seat.
   For additional information, refer to: Front Seat (501-10 Seating, Removal and Installation).

3.

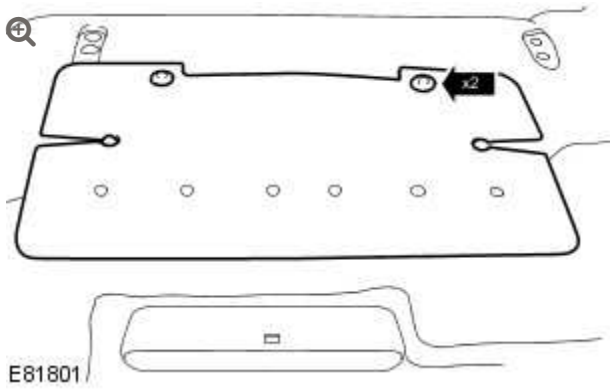

Remove the LH floor wiring harness trim panel.

- Remove the 2 clips.

4.

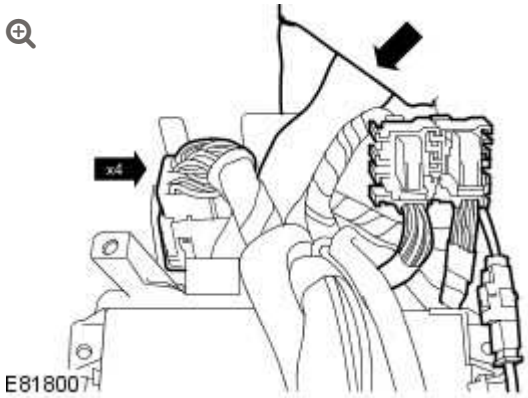

Reposition the floor console wiring harness.

- Disconnect the 4 electrical connectors.
- Reposition the carpet for access.

5. Remove the selector lever knob. For additional information, refer to: Selector Lever Knob (307-05B, Removal and Installation).

6. Remove the LH floor console extension.
For additional information, refer to: Floor Console Extension (501-12 Instrument Panel and Console, Removal and Installation).

7. Remove the RH floor console extension.

- Remove the screw.
- Release the 2 clips.

8.

NOTE:

Left-hand shown, right-hand similar.

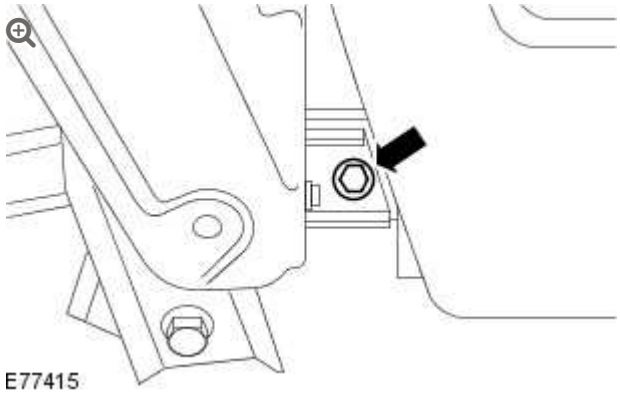

Remove the 2 front bolts from the floor console.

9.

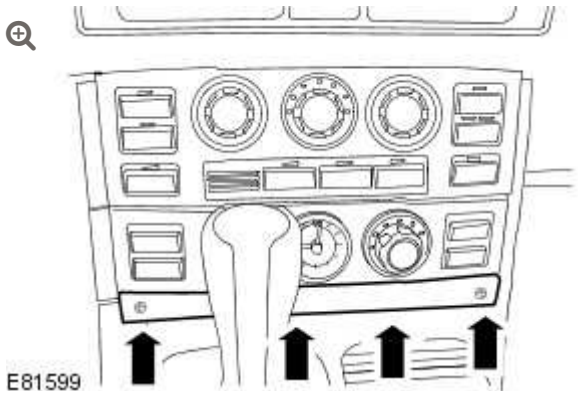

Remove the climate controlled seat switch trim panel.

- Carefully release the 4 clips.
- Remove the 2 front screws from the floor console upper panel.

10.

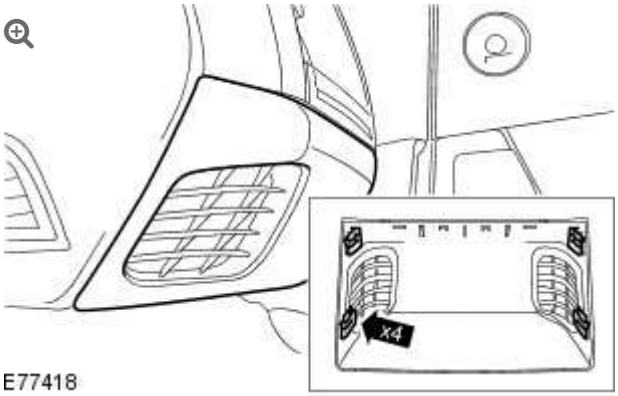

Remove the rear floor register.

- Release the 4 clips.

11.

NOTE:

Left-hand shown, right-hand similar.

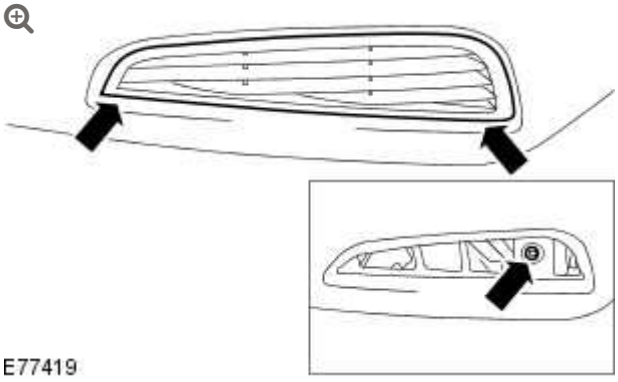

Remove the 2 rear bolts from the floor console.

- Remove the floor console rear LH floor register.
- Remove the floor console rear LH bolt.
- Remove the floor console rear RH floor register.
- Remove the floor console rear RH bolt.

12.

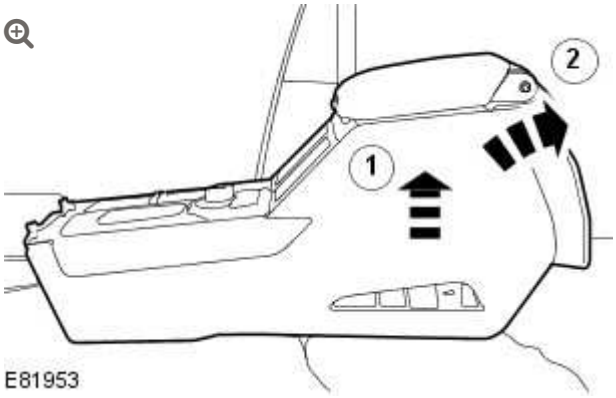

Remove the floor console.

- Reposition the floor console upwards and rearwards.

13. Remove the auxiliary climate control rear register.
For additional information, refer to: Register (412-03 Auxiliary Climate Control, Removal and Installation).

14. 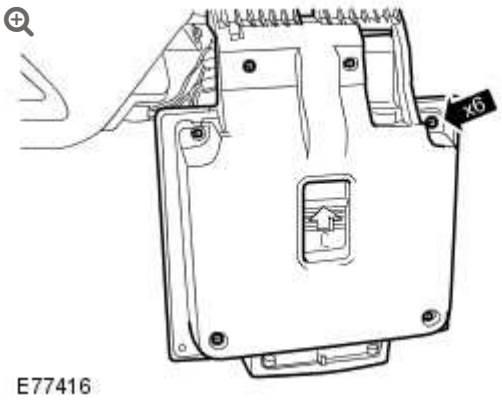

Remove the cellular phone cradle assembly lower trim panel.

- Reposition the cellular phone cradle assembly.
- Remove the 6 screws.

15.

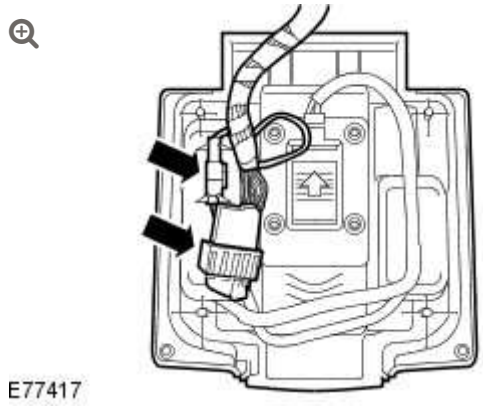

Remove the cellular phone cradle assembly.

- Disconnect the 2 electrical connectors.
- Release the 2 electrical connectors from the clips.

16.

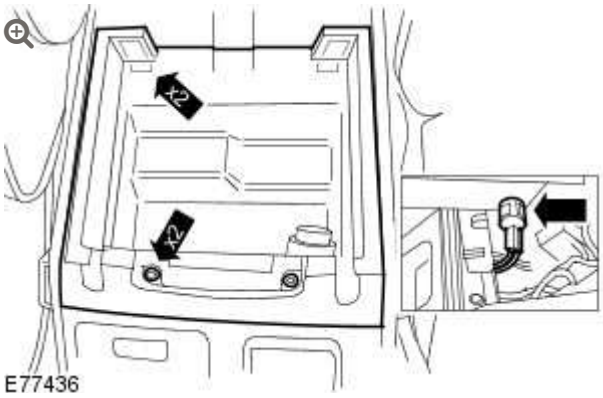

Remove the floor console stowage compartment.

- Open the floor console stowage compartment lid.
- Remove the 2 screws.
- Carefully release the 2 clips.
- Disconnect the cigar lighter electrical connector.

17.

CAUTION:

Make sure damage does not occur to the vehicle trim when removing the centre console side finisher trim panel.

NOTE:

Left-hand shown, right-hand similar.

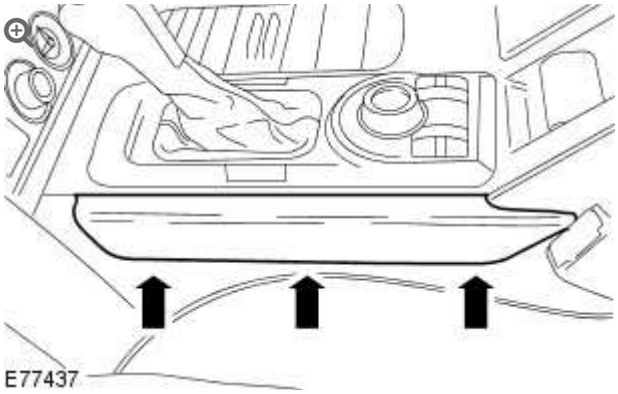

Remove the center console LH side finisher trim panel.

- Using a suitable tool, carefully release the 3 clips.

18.

CAUTION:

Make sure damage does not occur to the vehicle trim when removing the centre console side finisher trim panel.

Remove the center console RH side finisher trim panel.

- Using a suitable tool, carefully release the 3 clips.

19.

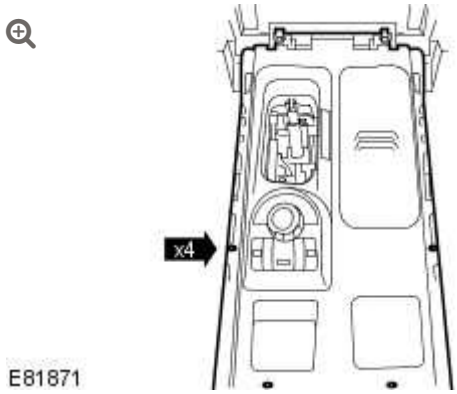

Reposition the floor console upper panel.

- Remove the 4 screws.
- Using a suitable tool, carefully release the 4 clips.

20.

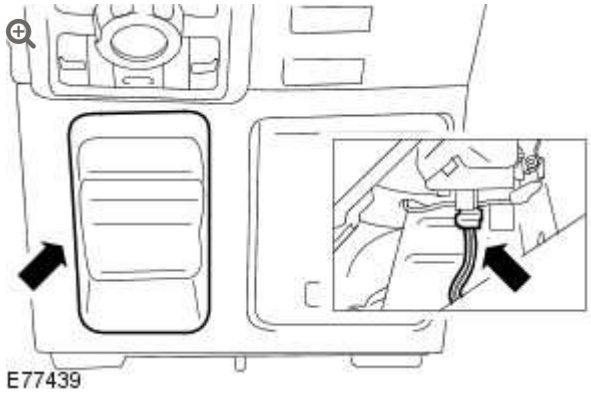

Disconnect the parking brake switch electrical connector.

21.

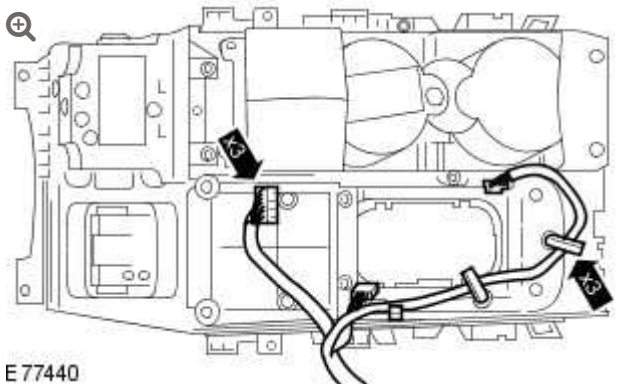

Remove the floor console upper panel.

- Release the 3 wiring harness clips.

- Disconnect the 3 electrical connectors.

22.

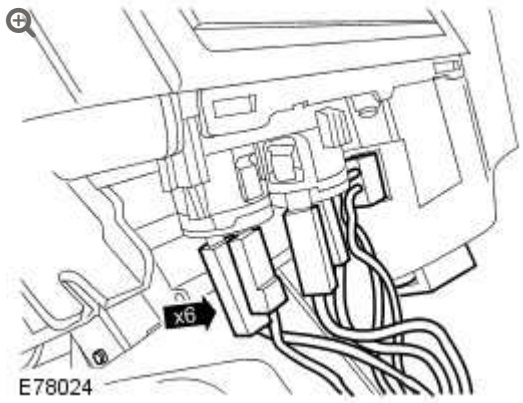

Disconnect the 6 electrical connectors from the rear passenger entertainment control panel.

23.

NOTE:

Do not disassemble further if the component is removed for access only.

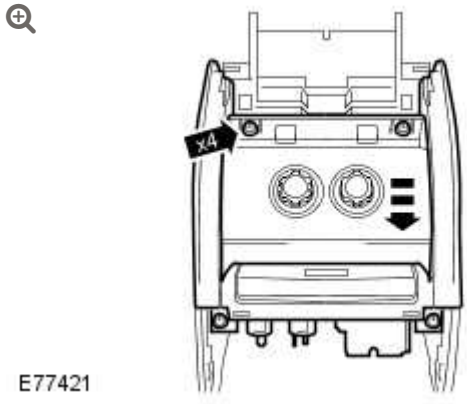

Remove the floor console rear trim panel.

- Remove the 4 screws.

24.

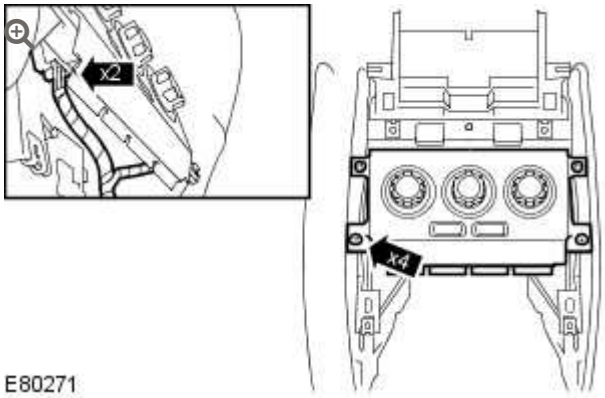

Remove the rear auxiliary climate control assembly.

- Remove the 4 screws.
- Disconnect the 2 electrical connectors.

25. **NOTE:**

Left-hand shown, right-hand similar.

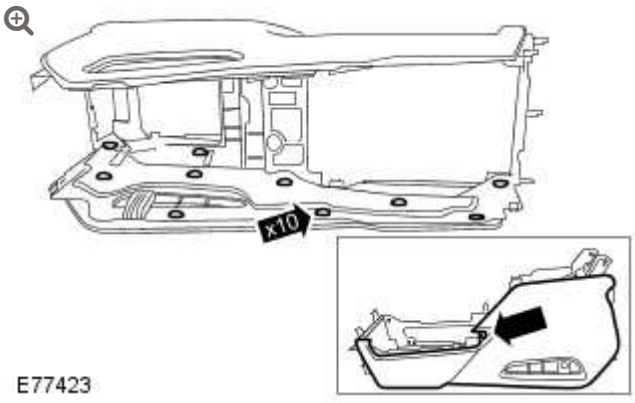

Remove the floor console LH finisher trim panel.

- Remove the 11 screws.

26. Remove the floor console RH finisher trim panel.

- Remove the 11 screws.

27. Remove the 14 clips from the floor console.

28. Remove the 2 brackets from the floor console.
    - Remove the 2 screws.

INSTALLATION

1. Install the 2 brackets to the floor console.
    - Install the 2 screws.
2. Install the 14 clips to the floor console.
3. Install the floor console LH finisher trim panel.
    - Install the 10 screws.
4. Install the floor console RH finisher trim panel.
    - Install the 10 screws.
5. Install the rear auxiliary climate control assembly.
    - Connect the 2 electrical connectors.
    - Install the 4 screws.
6. Install the floor console rear trim panel.
    - Install the 4 screws.
7. Connect the 6 electrical connectors to the rear passenger entertainment control panel.
8. Install the floor console upper panel.
    - Connect the 3 electrical connectors.
    - Attach the 3 wiring harness clips.
9. Connect the parking brake switch electrical connector.

10. Reposition the floor console upper panel.
    - Secure the 4 clips.
    - Install the 4 screws.

11. Install the center console LH side finisher trim panel.
    - Secure the 3 clips.

12. Install the center console RH side finisher trim panel.
    - Secure the 3 clips.

13. Install the floor console stowage compartment.
    - Connect the cigar lighter electrical connector.
    - Secure the 2 clips.
    - Install the 2 screws.
    - Close the floor console stowage compartment lid.

14. Install the cellular phone cradle assembly.
    - Attach the 2 electrical connectors to the clips.
    - Connect the 2 electrical connectors.

15. Install the cellular phone cradle assembly lower trim panel.
    - Install the six screws.
    - Reposition the cellular phone cradle assembly.

16. Install the auxiliary climate control rear register.
    For additional information, refer to: Register (412-03 Auxiliary Climate Control, Removal and Installation).

17.

CAUTION:

Make sure the floor console is correctly located and installed. Failure to follow this instruction will result in damage to the vehicle trim.

Install the floor console.

- Reposition the floor console to its original position.

18. Install the 2 rear bolts to the floor console.
    - Install the floor console rear RH bolt.
    - Install the floor console rear RH floor register.
    - Install the floor console rear LH bolt.
    - Install the floor console rear LH floor register.

19. Install the rear floor register.
    - Secure the 4 clips.

20. Install the climate controlled seat switch trim panel.
    - Install the 2 front screws to the floor console upper panel.
    - Secure the 4 clips.

21. Install the 2 front bolts to the floor console.
    - Install the floor console front RH bolt.
    - Install the floor console front LH bolt.

22. Install the LH floor console extension.
    For additional information, refer to: Floor Console Extension (501-12 Instrument Panel and Console, Removal and Installation).

23. Install the RH floor console extension.
    - Install the screw.
    - Secure the 2 clips.

24. Install the selector lever knob. For additional information, refer to: Selector Lever Knob (307-05B, Removal and Installation).

25. Reposition the floor console wiring harness.
    - Reposition the carpet for access.
    - Connect the 4 electrical connectors.

26. Install the LH floor wiring harness trim panel.
    - Install the 2 clips.

27. Install the LH front seat.
    For additional information, refer to: Front Seat (501-10 Seating, Removal and Installation).

28. Connect the battery ground cable.
    For additional information, refer to: Specifications (414-00 Charging System - General Information, Specifications).

INSTRUMENT PANEL AND CONSOLE

FLOOR CONSOLE CUP HOLDER – TDV8 3.6L DIESEL/V8 5.0L PETROL/V8 S/C 5.0L PETROL (G909466)

REMOVAL AND INSTALLATION

76.25.27	CUP HOLDERS – FLOOR CONSOLE – RENEW	ALL DERIVATIVES	0.6	USED WITHINS	+

REMOVAL

1. Disconnect the battery ground cable.
   For additional information, refer to: Specifications (414-00, Specifications).

2. Remove the floor console upper panel.
   For additional information, refer to: Floor Console Upper Panel (501-12, Removal and Installation).

3.

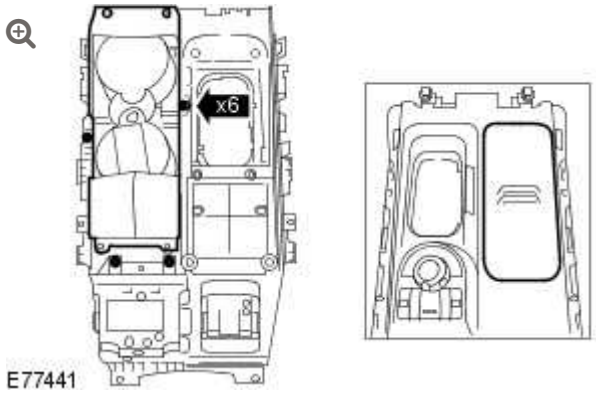

Remove the floor console cup holder.

- Remove the 6 screws.

INSTALLATION

1. Install the floor console cup holder.
   - Install the 6 screws.
2. Install the floor console upper panel.
   For additional information, refer to: Floor Console Upper Panel (501-12, Removal and Installation).
3. Connect the battery ground cable.
   For additional information, refer to: Specifications (414-00, Specifications).

INSTRUMENT PANEL AND CONSOLE

FLOOR CONSOLE EXTENSION (G860315)

REMOVAL AND INSTALLATION

REMOVAL

1.

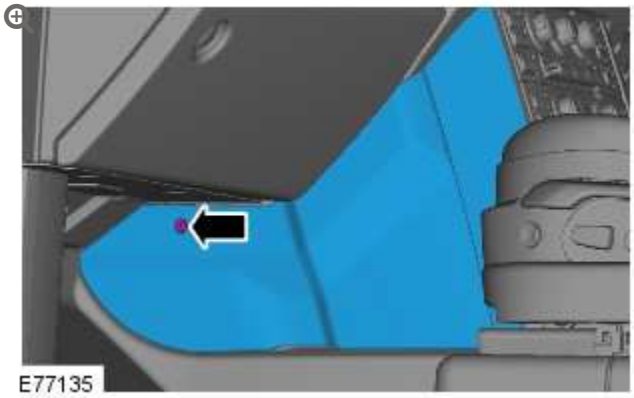

Remove the LH floor console extension.

- Remove the screw.
- Release the 2 clips.

2.

NOTE:

Do not disassemble further if the component is removed for access only.

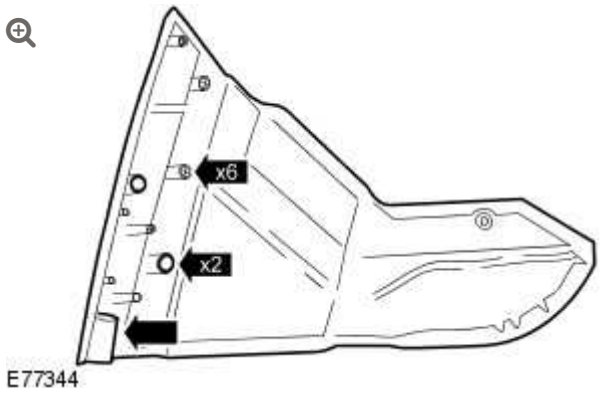

Remove the floor console extension trim panel.

- Remove the rubber isolator.
- Remove the 6 screws.
- Remove the 2 clips.

INSTALLATION

1. Install the floor console extension trim panel.
   - Install the rubber isolator.
   - Install the 6 screws.
   - Install the 2 clips.
2. Install the LH floor console extension.
   - Secure the 2 clips.
   - Tighten the screw.

INSTRUMENT PANEL AND CONSOLE

FLOOR CONSOLE STOWAGE COMPARTMENT

(G885308)

REMOVAL AND INSTALLATION

REMOVAL

1.

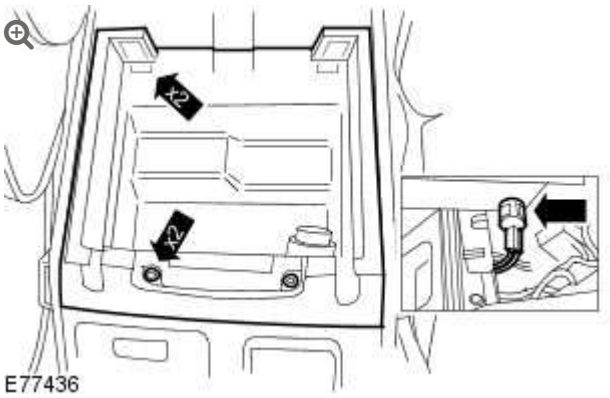

Remove the floor console stowage compartment.

- Open the floor console stowage compartment lid.
- Remove the 2 screws.
- Using a suitable tool, carefully release the 2 clips.
- Disconnect the cigar lighter electrical connector.

2. **NOTE:**

> Do not disassemble further if the component is removed for access only.

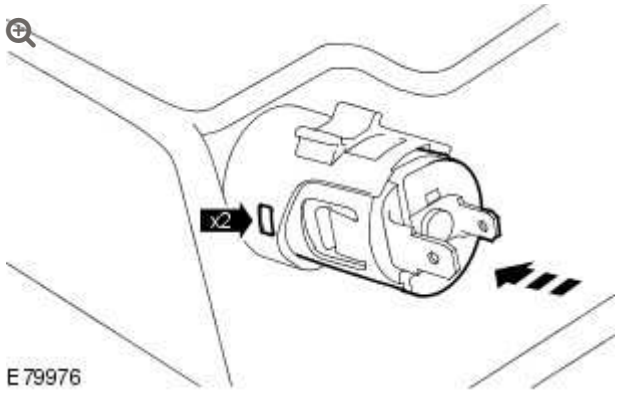

Remove the cigar lighter assembly.

- Remove the cigar lighter.
- With extreme care release the 2 clips and remove the cigar lighter inner housing.
- Remove the cigar lighter housing.

INSTALLATION

1. Install the cigar lighter assembly.

2. **CAUTION:**

> Make sure the locating tangs are aligned.

Install the floor console stowage compartment.

- Connect the cigar lighter electrical connector.

- Secure the 2 clips.
- Install the 2 screws.
- Close the floor console stowage compartment lid.

INSTRUMENT PANEL AND CONSOLE

FLOOR CONSOLE STOWAGE COMPARTMENT LID (G874146)

REMOVAL AND INSTALLATION

76.25.27	CUP HOLDERS - FLOOR CONSOLE - RENEW	ALL DERIVATIVES	0.6	USED WITHINS	+

REMOVAL

1. Position the front seats fully forward.
   - Reposition both of the front seat backrests for access.

2.

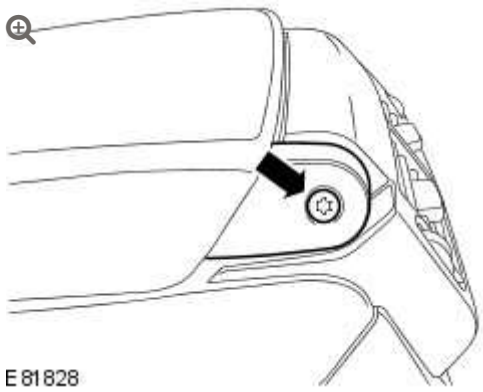

Remove the floor console stowage compartment lid LH hinge trim.

- Remove the floor console stowage compartment lid hinge pin LH bolt.

3.

CAUTION:

Make sure the suitable tool is fully inserted. Failure to follow this instruction may result in damage to the vehicle trim.

NOTE:

Open the floor console stowage compartment lid.

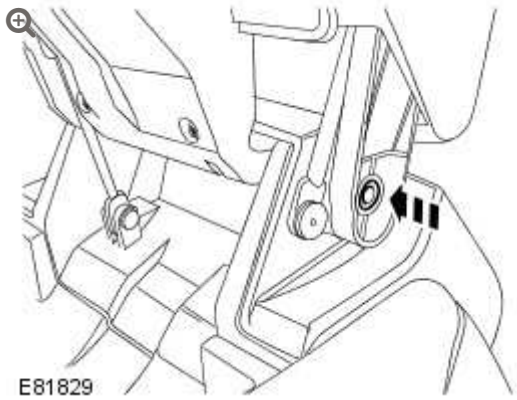

Remove the floor console stowage compartment lid hinge pin.

- Using a suitable tool, remove the floor console stowage compartment lid hinge pin.

4.

CAUTION:

Do not remove the tool at this stage.

NOTE:

Close the floor console stowage compartment lid.

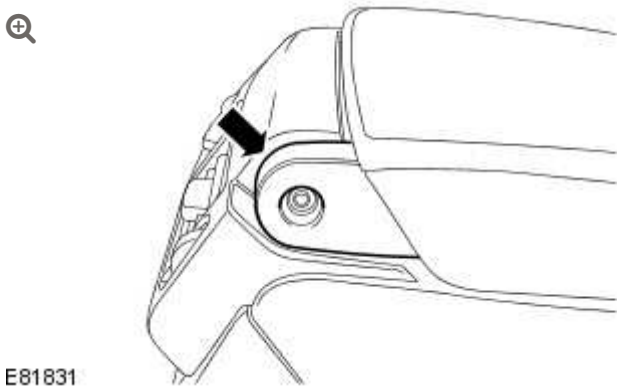

Remove the floor console stowage compartment lid RH hinge trim.

5.

CAUTION:

Do not remove the tool at this stage.

NOTE:

Open the floor console stowage compartment lid.

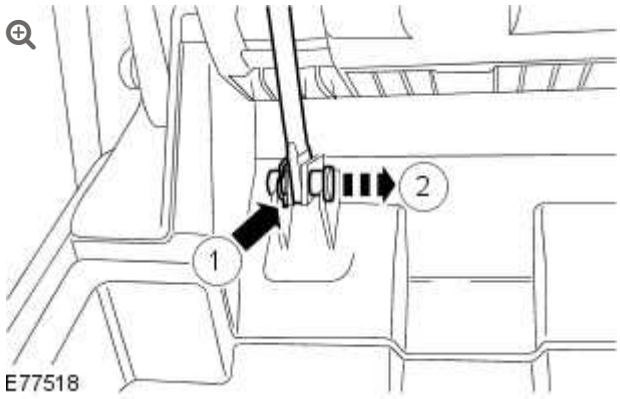

Release the cellular phone handset holder lid damper.

1. Remove the cellular phone handset holder lid damper clevis pin clip.
2. Remove the cellular phone handset holder lid damper clevis pin.

6.

CAUTION:

Do not remove the tool at this stage.

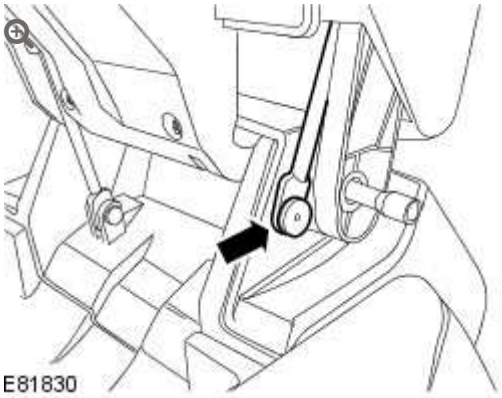

Release the floor console stowage compartment lid damper.

- Release the cellular phone handset holder from the floor console stowage compartment lid.
- Remove the floor console stowage compartment lid damper screw.

7.

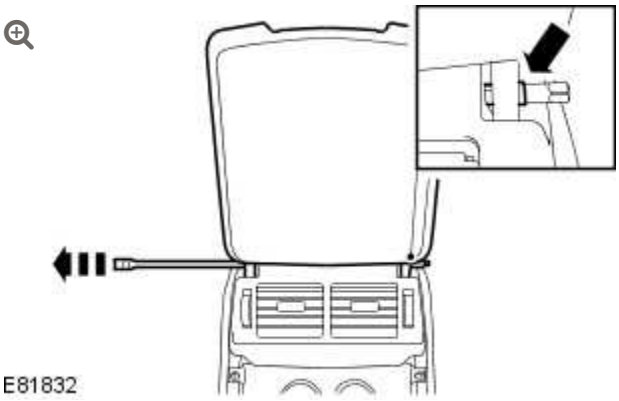

Remove the floor console stowage compartment lid.

- Remove the tool.
- Release the floor console stowage compartment lid hinge pin RH sleeve clips.
- Remove the floor console stowage compartment lid hinge pin RH sleeve.

INSTALLATION

1.

CAUTIONS:

- Make sure the suitable tool is fully inserted. Failure to follow this instruction may result in damage to the vehicle trim.
- Make sure the cellular phone handset holder is aligned with the floor console stowage compartment lid.

Install the floor console stowage compartment lid.

- Install the floor console stowage compartment lid hinge pin RH sleeve.
- Secure the floor console stowage compartment lid hinge pin RH sleeve clips.
- Using a suitable tool, align the floor console stowage compartment lid.

2.

CAUTION:

Do not remove the tool at this stage.

Secure the floor console stowage compartment lid damper.

- Install the floor console stowage compartment lid damper screw.
- Secure the cellular phone handset holder to the floor console stowage compartment lid.

3.

CAUTION:

Do not remove the tool at this stage.

Secure the cellular phone handset holder lid damper.

- Install the cellular phone handset holder lid damper clevis pin.
- Install the cellular phone handset holder lid damper clevis pin clip.

4.

CAUTION:

Do not remove the tool at this stage.

NOTE:

Close the floor console stowage compartment lid.

Install the floor console stowage compartment lid RH hinge trim.

5.

NOTE:

Open the floor console stowage compartment lid.

Install the floor console stowage compartment lid hinge pin.

- Remove the tool.

6.

NOTE:

Close the floor console stowage compartment lid.

Install the floor console stowage compartment lid LH hinge trim.

- Install the floor console stowage compartment lid hinge pin LH bolt.

7. Reposition the front seats to their original position.

INSTRUMENT PANEL AND CONSOLE

FLOOR CONSOLE UPPER PANEL – TDV8 3.6L DIESEL/V8 5.0L PETROL/V8 S/C 5.0L PETROL (G860311)

REMOVAL AND INSTALLATION

REMOVAL

1. Disconnect the battery ground cable.
   For additional information, refer to: Specifications (414-00 Charging System - General Information, Specifications).

2. 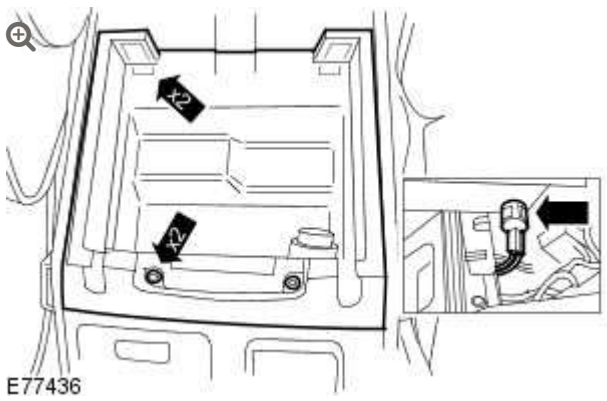

   Remove the floor console stowage compartment.

- Open the floor console stowage compartment lid.
- Remove the 2 screws.
- Carefully release the 2 clips.
- Disconnect the cigar lighter electrical connector.

3.

CAUTION:

Make sure damage does not occur to the vehicle trim when removing the centre console side finisher trim panel.

NOTE:

Left-hand shown, right-hand similar.

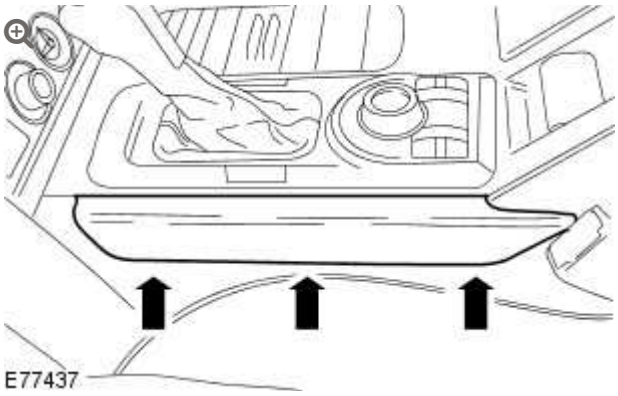

Remove the center console LH side finisher trim panel.

- Using a suitable tool, carefully release the 3 clips.

4.

CAUTION:

Make sure damage does not occur to the vehicle trim when removing the centre console side finisher trim panel.

Remove the center console RH side finisher trim panel.

- Using a suitable tool, carefully release the 3 clips.

5. Remove the selector lever knob. For additional information, refer to: Selector Lever Knob (307-05B, Removal and Installation).

6. 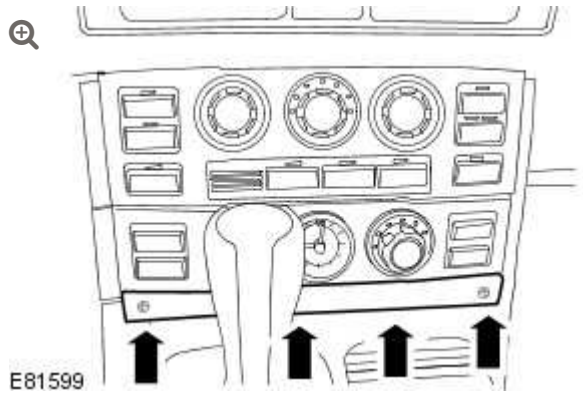

Remove the climate controlled seat switch trim panel.

- Carefully release the 4 clips.
- Remove the 2 front screws from the floor console upper panel.

7.

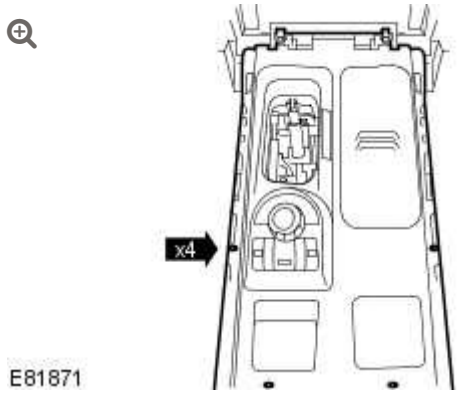

Reposition the floor console upper panel.

- Using a suitable tool, carefully release the 4 clips.
- Remove the 4 screws.

8.

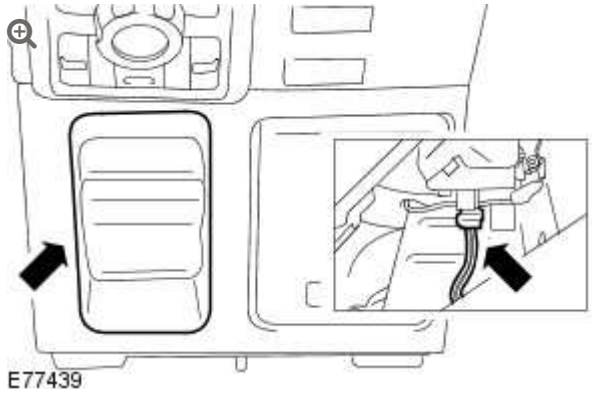

Disconnect the parking brake switch electrical connector.

9.

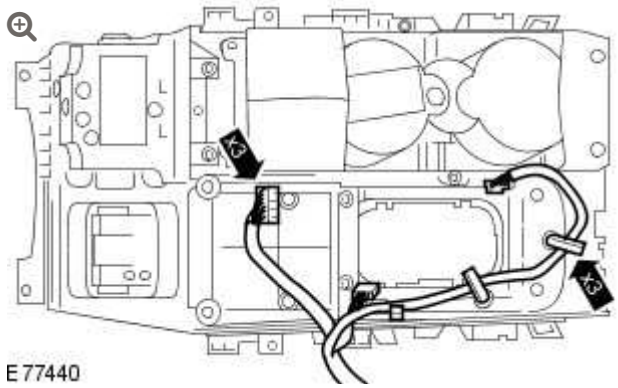

Remove the floor console upper panel.

- Release the 3 wiring harness clips.

- Disconnect the 3 electrical connectors.

10. **NOTE:**

> Do not disassemble further if the component is removed for access only.

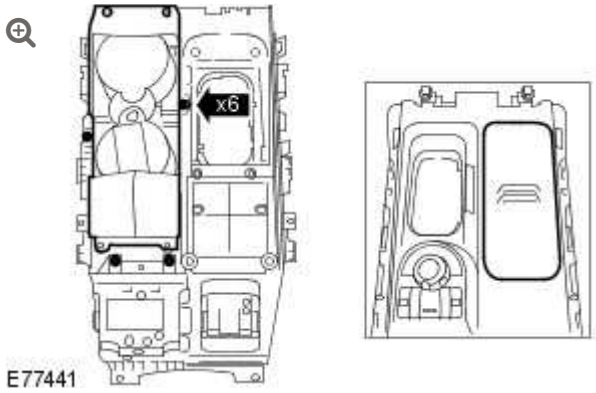

Remove the floor console cup holder.

- Remove the 6 screws.

11. 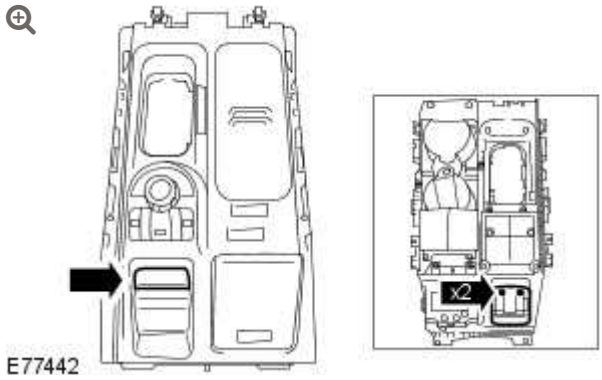

Remove the parking brake switch.

- Remove the parking brake switch trim panel.
- Remove the 2 screws.

12.

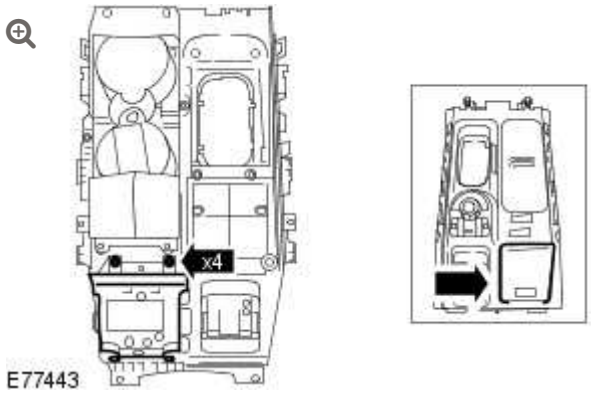

Remove the upper floor console stowage compartment.

- Remove the 4 screws.

13.

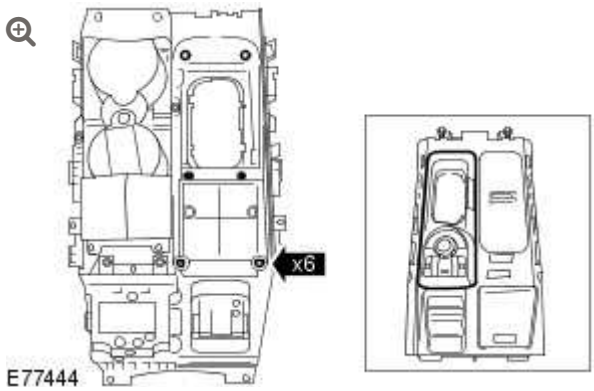

Remove the ride and handling optimization switch assembly.

- Remove the 6 screws.

INSTALLATION

1. Install the ride and handling optimization switch assembly.
   - Install the 6 screws.
2. Install the upper floor console stowage compartment.
   - Install the 4 screws.
3. Install the parking brake switch.
   - Install the 2 screws.

- Install the parking brake switch trim panel.

4. Install the floor console cup holder.
   - Install the 6 screws.
5. Install the floor console upper panel.
   - Connect the 3 electrical connectors.
   - Attach the 3 wiring harness clips.
6. Connect the parking brake switch electrical connector.
7. Reposition the floor console upper panel.
   - Secure the 4 clips.
   - Install the 4 screws.
8. Install the climate controlled seat switch trim panel.
   - Install the 2 front screws to the floor console upper panel.
   - Secure the 4 clips.
9. Install the selector lever knob. For additional information, refer to: Selector Lever Knob (307-05B, Removal and Installation).
10. Install the center console LH side finisher trim panel.
    - Secure the 3 clips.
11. Install the center console RH side finisher trim panel.
    - Secure the 3 clips.
12. Install the floor console stowage compartment.
    - Connect the cigar lighter electrical connector.

- Secure the 2 clips.
- Install the 2 screws.
- Close the floor console stowage compartment lid.

13. Connect the battery ground cable.
    For additional information, refer to: Specifications (414-00 Charging System - General Information, Specifications).

INSTRUMENT PANEL CENTER REINFORCEMENT

(G1236355)

REMOVAL AND INSTALLATION

REMOVAL

1. Remove the floor console.
   Refer to: Floor Console (501-12, Removal and Installation).

2. 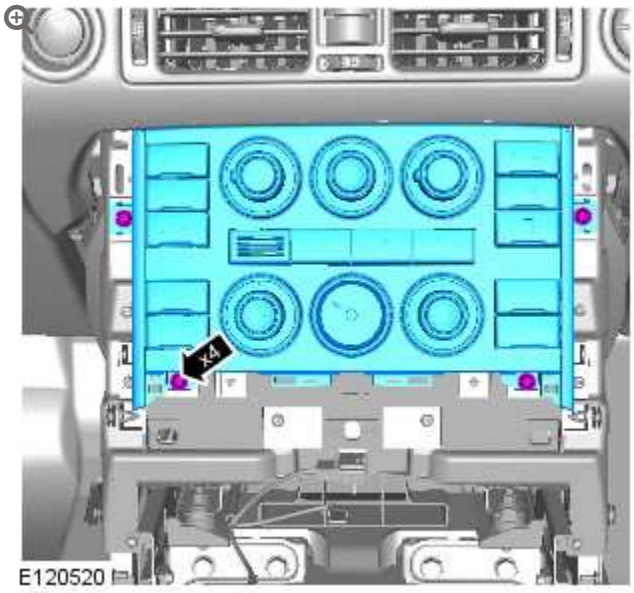

   Torque: **2 Nm**

3.

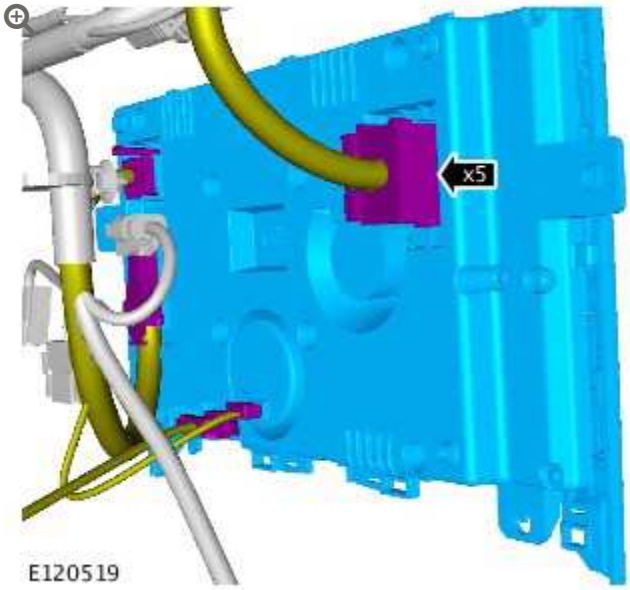

4.

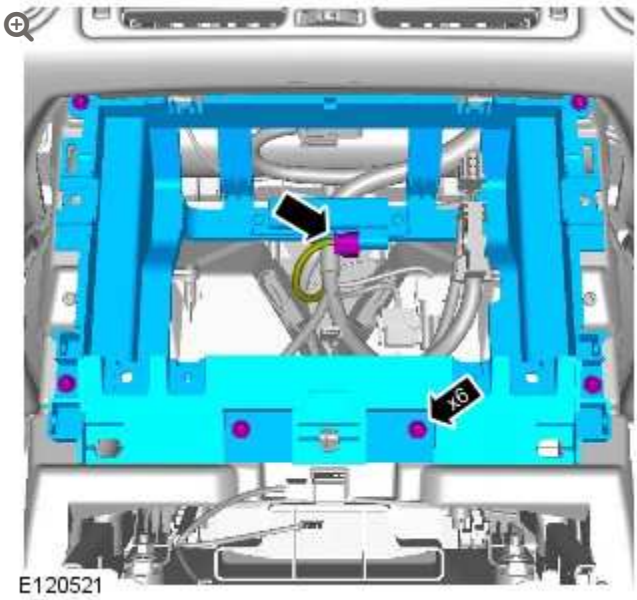

Torque: **3 Nm**

5.

NOTE:

Do not disassemble further if the component is removed for access only.

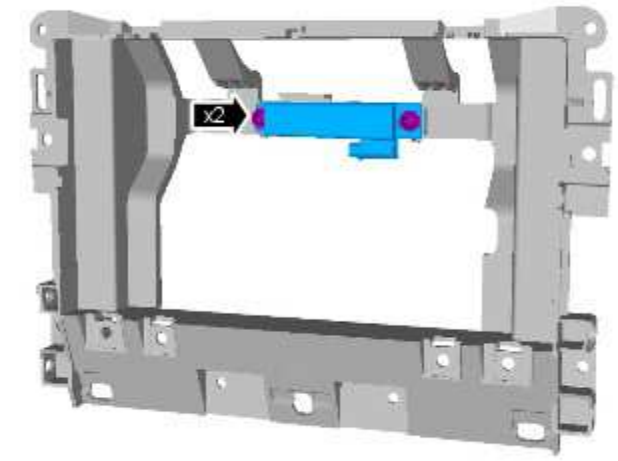

E120518

INSTALLATION

1. To install, reverse the removal procedure.

INSTRUMENT PANEL AND CONSOLE

INSTRUMENT PANEL LOWER SECTION (G899342)

REMOVAL AND INSTALLATION

76.46.05	PANEL - LOWER INSTRUMENT - RENEW	ALL DERIVATIVES	2.3	USED WITHINS	+

REMOVAL

WARNINGS:

- Persons working on the supplemental restraint system (SRS) must be fully trained and have been issued with the safety guidelines.
- Allow a period of 10 minutes to elapse after disconnecting the battery before undertaking any work on the SRS.
- The SRS electrical connectors are unique. DO NOT force, or attempt to connect electrical connectors to the wrong sockets.
- The correct procedures must always be used when working on SRS components.
- It is imperative that before any work is undertaken on the SRS system, the appropriate information is read thoroughly.
- Always disconnect both battery cables before beginning work on the SRS system. Disconnect the ground cable first. Never reverse connect the battery.
- Take extra care when handling SRS components.

1. Make the air bag supplemental restraint system (SRS) safe.
   For additional information, refer to: Standard Workshop Practices (100-00, Description and Operation).

2. Disconnect the battery ground cable.
   For additional information, refer to: Specifications (414-00, Specifications).

3. Remove the instrument cluster.
   For additional information, refer to: Instrument Cluster (413-01, Removal and Installation).

4.

NOTE:

LHD illustration shown, RHD is similar.

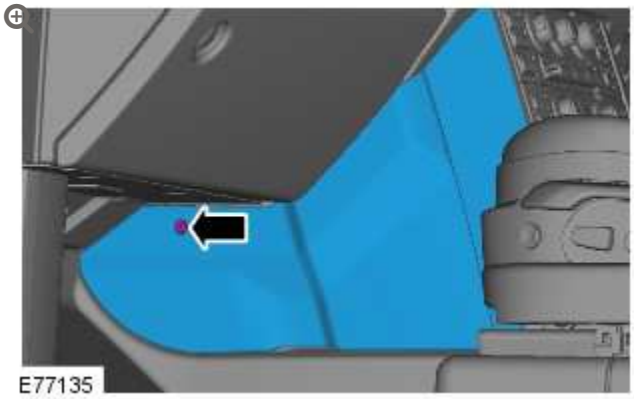

Remove the driver side floor console extension.

- Remove the screw.
- Release the 2 clips.

5.

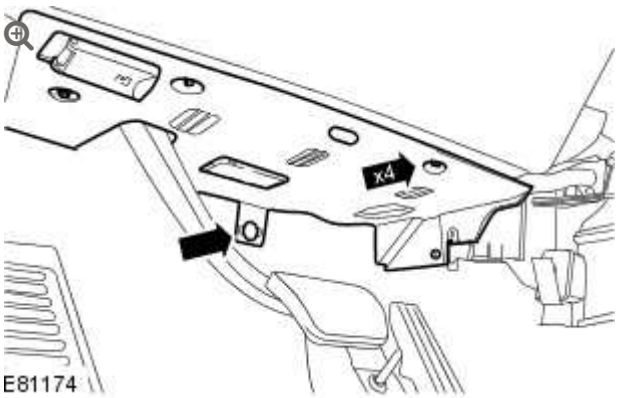

Release the driver side closing trim panel.

- Remove the 4 screws.
- Remove the clip.

6.

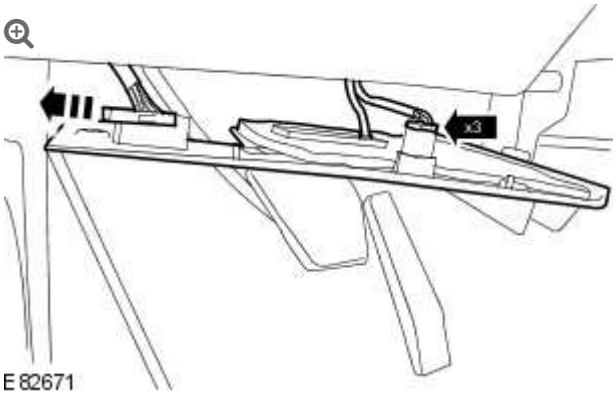

Remove the driver side closing trim panel.

- Disconnect the 2 electrical connectors.
- Release the vehicle diagnostic socket.

7.

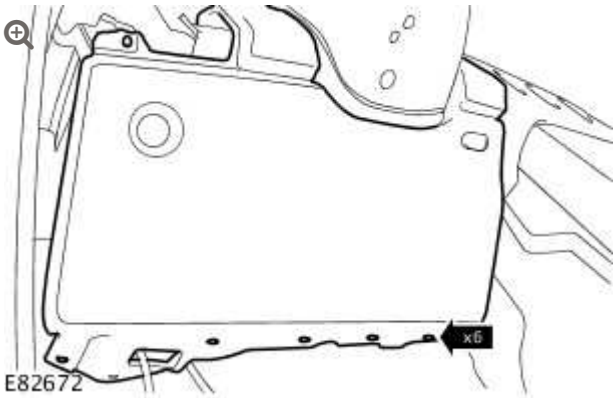

Remove the 6 lower screws from the instrument panel lower section.

8.

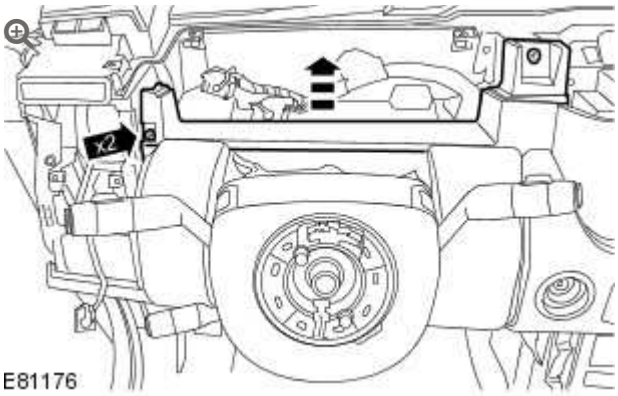

Remove the instrument cluster finish panel.

- Remove the 2 screws.

9. 

Release the instrument panel lower section.

- Remove the 2 upper screws.

10. 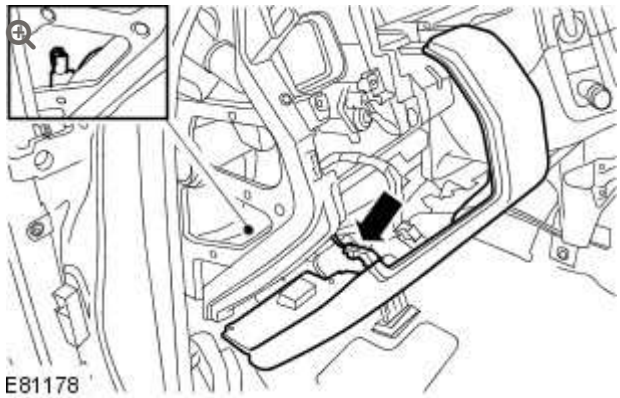

Remove the instrument panel lower section.

- Release the driver lower air bag module harness.
- Disconnect the driver lower air bag module electrical connector.
- Disconnect the footwell lamp electrical connector.

11. **NOTE:**

Do not disassemble further if the component is removed for access only.

Remove the footwell lamp assembly.

- Release the 2 clips.

12.

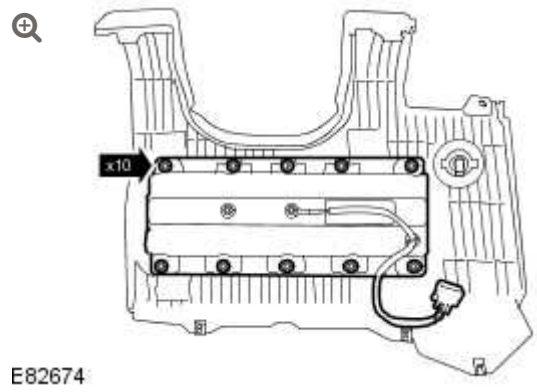

Remove the driver lower air bag module.

- Remove the 10 nuts.

INSTALLATION

1. Install the driver lower air bag module.
   - Tighten the nuts to 8 Nm (6 lb.ft).
2. Install the footwell lamp assembly.
   - Secure with the 2 clips.
3. Install the instrument panel lower section.
   - Connect the footwell lamp electrical connector.
   - Connect the driver lower air bag module electrical connector.
   - Secure the driver lower air bag module harness.
4. Secure the instrument panel lower section.
   - Install the 2 upper screws.

5. Install the instrument cluster finish panel.
   - Install the 2 screws.

6. Install the 6 lower screws to the instrument panel lower section.

7. Install the driver side closing trim panel.
   - Attach the vehicle diagnostic socket.
   - Connect the 2 electrical connectors.

8. Secure the driver side closing trim panel.
   - Install the 4 screws.
   - Install the clip.

9. Install the driver side floor console extension.
   - Secure the 2 clips.
   - Install the screw.

10. Install the instrument cluster.
    For additional information, refer to: Instrument Cluster (413-01, Removal and Installation).

11. Connect the battery ground cable.
    For additional information, refer to: Specifications (414-00, Specifications).

INSTRUMENT PANEL REINFORCEMENT (G1236450)

REMOVAL AND INSTALLATION

REMOVAL

WARNINGS:

- Persons working on the supplemental restraint system (SRS) must be fully trained and have been issued with the safety guidelines.
- Allow a period of 10 minutes to elapse after disconnecting the battery before undertaking any work on the SRS.
- The SRS electrical connectors are unique. DO NOT force, or attempt to connect electrical connectors to the wrong sockets.
- The correct procedures must always be used when working on SRS components.
- It is imperative that before any work is undertaken on the SRS system, the appropriate information is read thoroughly.
- Always disconnect both battery cables before beginning work on the SRS system. Disconnect the ground cable first. Never reverse connect the battery.
- Take extra care when handling SRS components.

1. Make the air bag supplemental restraint system (SRS) safe.
   Refer to: Standard Workshop Practices (100-00 General Information, Description and Operation).

2. Disconnect the battery ground cable.
   Refer to: Specifications (414-00 Battery and Charging System - General Information, Specifications).

3. Refer to: Clockspring (501-20B Supplemental Restraint System, Removal and Installation).

4. Refer to: Lower Center Registers Panel Assembly (501-12 Instrument Panel and Console, Removal and Installation).

5.

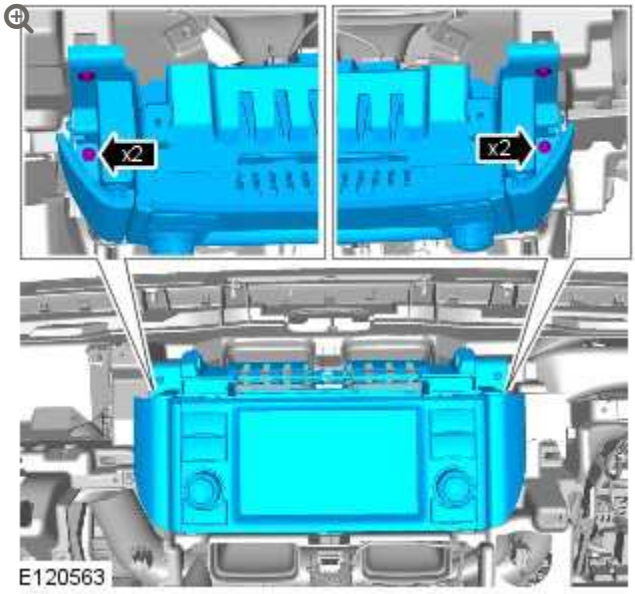

Torque: **2 Nm**

6.

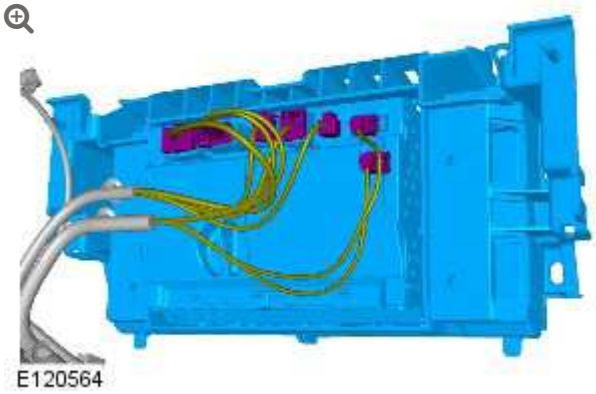

7.



8.

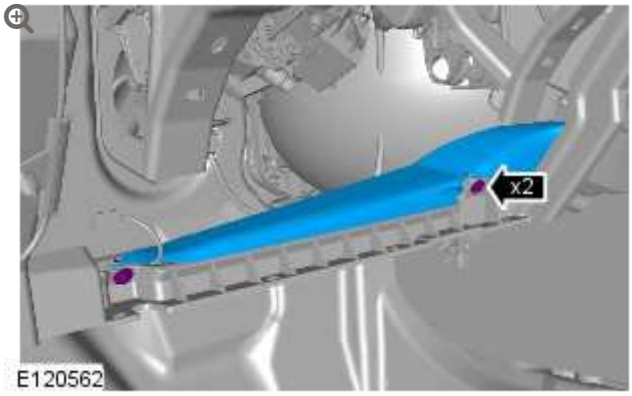

Torque: **3 Nm**

9.

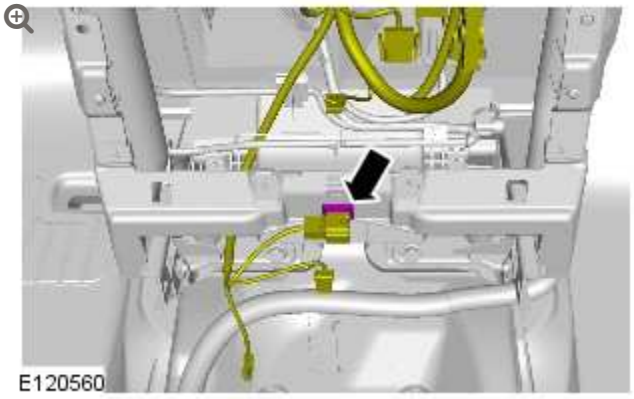

10.

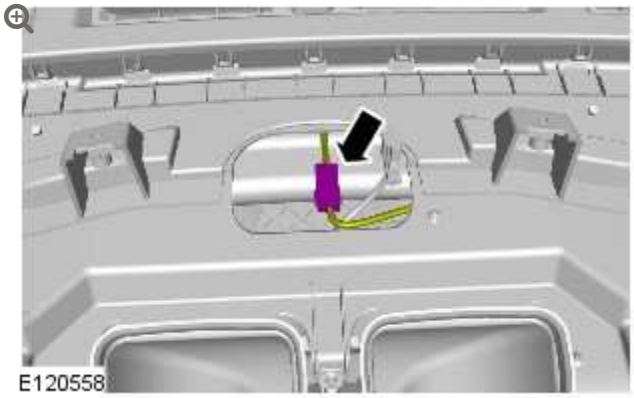

11.

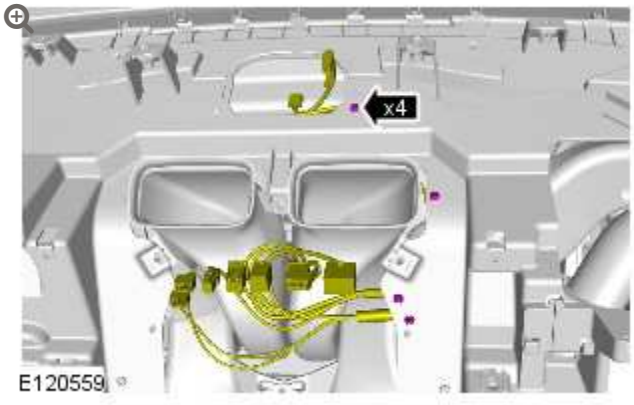

12.

NOTE:

Note the position of the wiring harnesses to aid installation.

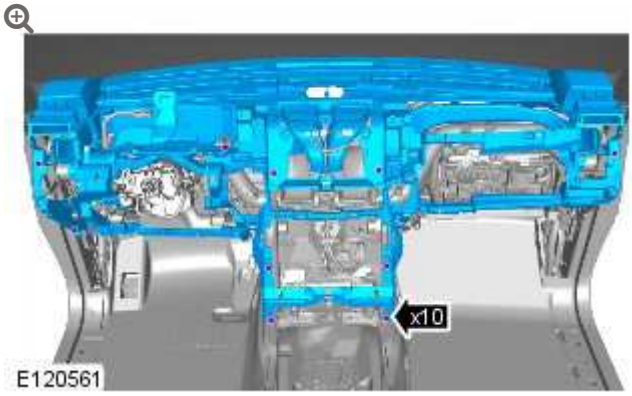

Torque: **3 Nm**

13.

NOTE:

Do not disassemble further if the component is removed for access only.

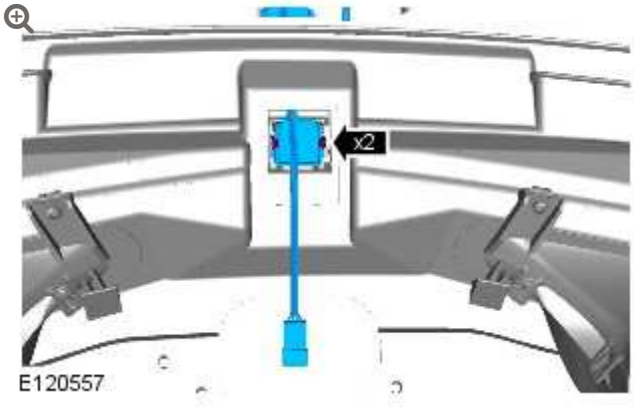

14.

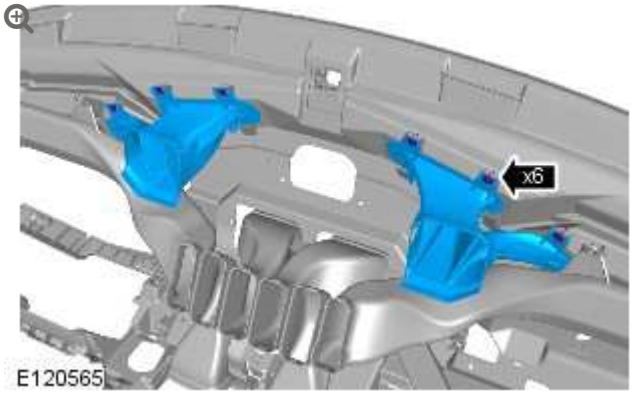

Torque: **3 Nm**

15.

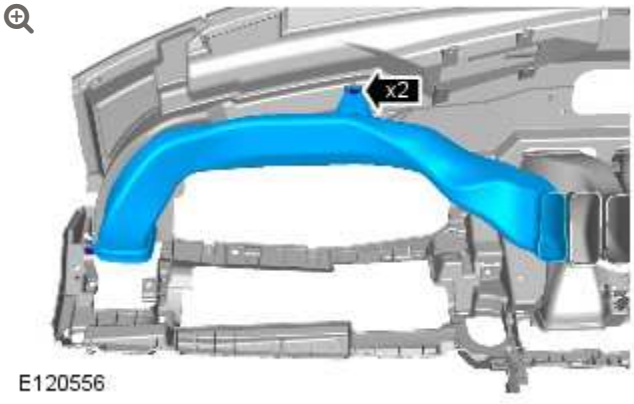

Torque: **3 Nm**

16.

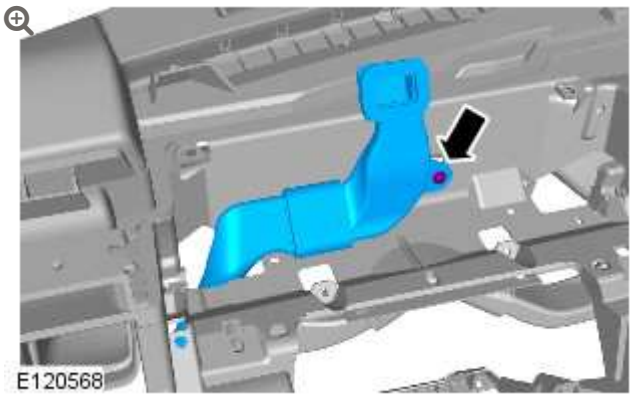

Torque: **3 Nm**

17.

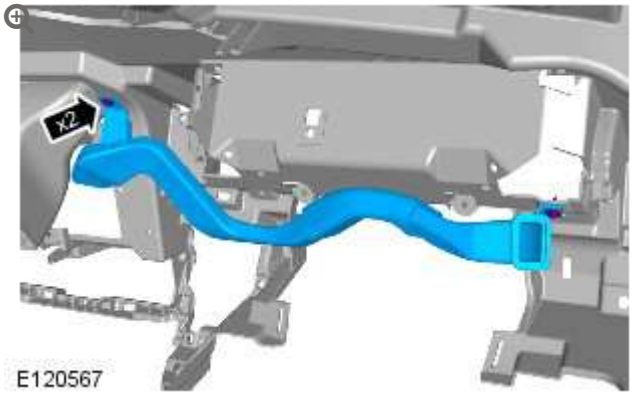

Torque: **3 Nm**

18.

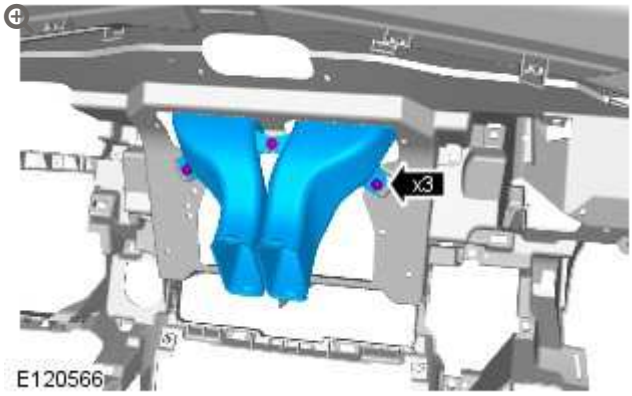

Torque: **3 Nm**

INSTALLATION

1. To install, reverse the removal procedure.

INSTRUMENT PANEL AND CONSOLE

INSTRUMENT PANEL UPPER SECTION (G874152)

REMOVAL AND INSTALLATION

76.46.04	INSTRUMENT PANEL UPPER SECTION - COMPLETE - RENEW	ALL DERIVATIVES	1.7	USED WITHINS	+

REMOVAL

WARNINGS:

- The air bag is mounted directly under this component, extreme care is necessary.
- Persons working on the supplemental restraint system (SRS) must be fully trained and have been issued with the safety guidelines.
- Allow a period of 10 minutes to elapse after disconnecting the battery before undertaking any work on the SRS.
- The SRS electrical connectors are unique. DO NOT force, or attempt to connect electrical connectors to the wrong sockets.
- The correct procedures must always be used when working on SRS components.
- It is imperative that before any work is undertaken on the SRS system, the appropriate information is read thoroughly.
- Always disconnect both battery cables before beginning work on the SRS system. Disconnect the ground cable first. Never reverse connect the battery.
- Take extra care when handling SRS components.

NOTE:

The passenger air bag is installed to the underside of the instrument panel upper section.

1. Make the air bag supplemental restraint system (SRS) safe. For additional information, refer to: Standard Workshop Practices (100-00, Description and Operation).

2. Disconnect the battery ground cable.
   For additional information, refer to: Specifications (414-00, Specifications).

3. Remove the upper glove compartment.
   For additional information, refer to: Upper Glove Compartment (501-12, Removal and Installation).

4. 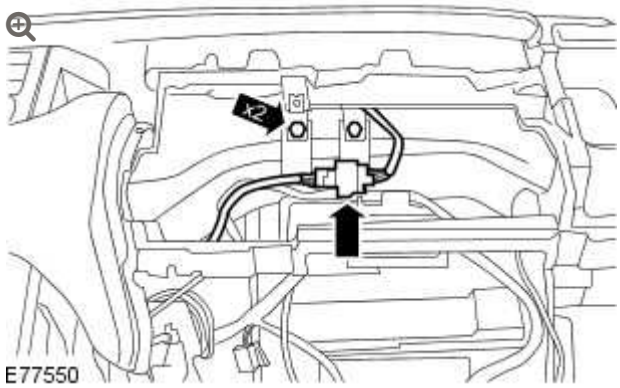

   Disconnect the passenger air bag module electrical connector.

   - Release the passenger air bag module harness.

5. Remove the 2 bolts securing the passenger air bag module to the in-vehicle crossbeam.

6. Remove the driver side register trim panel.
   For additional information, refer to: Driver Side Register Trim Panel (412-01, Removal and Installation).

7. Remove the upper center registers.
   For additional information, refer to: Upper Center Registers (412-01, Removal and Installation).

8.

CAUTION:

Protect the surrounding trim to avoid damage.

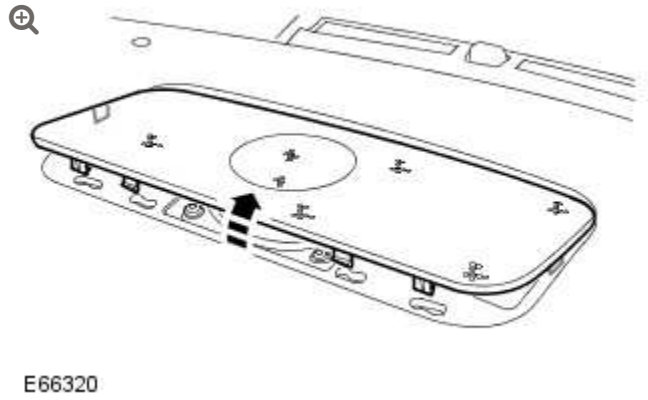

E66320

Remove the instrument panel center speaker grille.

9.

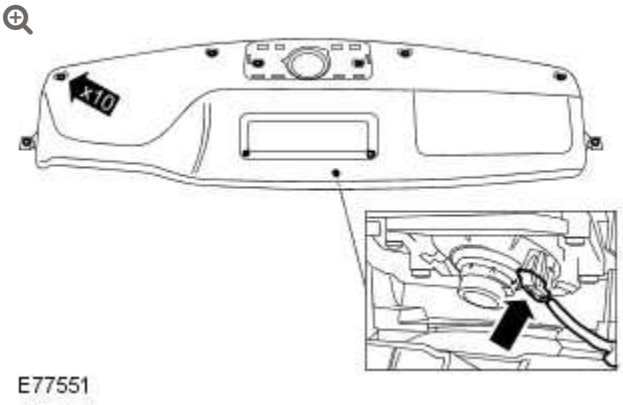

E77551

With assistance, remove the instrument panel upper section.

- Remove the 10 screws.
- Slide the instrument panel upper section away from the windshield and disconnect the instrument panel center speaker electrical connector.

10.

NOTE:

> Do not disassemble further if the component is removed for access only.

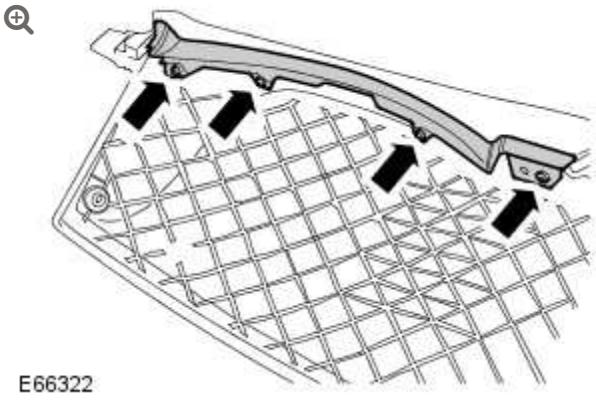

Remove the instrument cluster finish panel.

- Remove the 4 screws.

11.

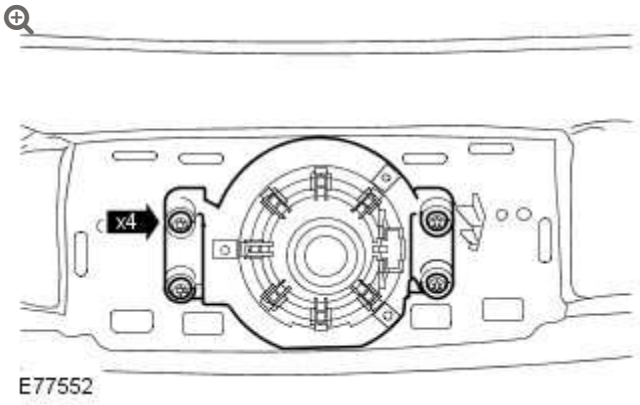

Remove the instrument panel center speaker.

- Remove the 4 screws.

12.

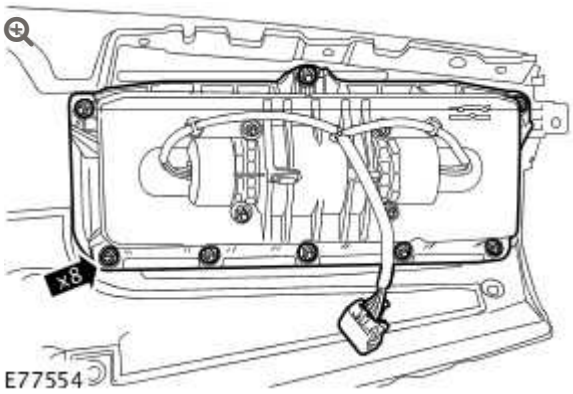

Remove the passenger air bag module.

- Remove the 8 nuts.

INSTALLATION

1. Install the passenger air bag module.
   - Tighten the nuts to 8 Nm (6 lb.ft).
2. Install the instrument panel center speaker.
   - Install the 4 screws.
3. Install the instrument cluster finish panel.
   - Install the 4 screws.
4. With assistance, install the instrument panel upper section.
   - Connect the instrument panel center speaker electrical connector.
   - Install the 10 screws.
5. Install the instrument panel center speaker grille.
6.

Install the upper center registers.
For additional information, refer to: Upper Center Registers (412-01, Removal and Installation).

7. Install the driver side register trim panel.
   For additional information, refer to: Driver Side Register Trim Panel (412-01, Removal and Installation).

8. Install the 2 bolts securing the passenger air bag module to the in-vehicle crossbeam.

9. Connect the passenger air bag module electrical connector.
   - Secure the passenger air bag module harness.

10. Install the upper glove compartment.
    For additional information, refer to: Upper Glove Compartment (501-12, Removal and Installation).

11. Connect the battery ground cable.
    For additional information, refer to: Specifications (414-00, Specifications).

INSTRUMENT PANEL AND CONSOLE

IN-VEHICLE CROSSBEAM – V8 S/C 5.0L PETROL

(G1245178)

REMOVAL AND INSTALLATION

REMOVAL

WARNINGS:

- Persons working on the supplemental restraint system (SRS) must be fully trained and have been issued with the safety guidelines.
- Allow a period of 10 minutes to elapse after disconnecting the battery before undertaking any work on the SRS.
- The SRS electrical connectors are unique. DO NOT force, or attempt to connect electrical connectors to the wrong sockets.
- The correct procedures must always be used when working on SRS components.
- It is imperative that before any work is undertaken on the SRS system, the appropriate information is read thoroughly.
- Always disconnect both battery cables before beginning work on the SRS system. Disconnect the ground cable first. Never reverse connect the battery.
- Take extra care when handling supplemental restraint system (SRS) components.

1. Refer to: Cooling System Partial Draining and Vacuum Filling (303-03B, General Procedures).
2. Refer to: Air Conditioning (A/C) System Recovery, Evacuation and Charging - V8 5.0L Petrol/V8 S/C 5.0L Petrol (412-00 Climate Control System - General Information, General Procedures).
3. Refer to: Plenum Chamber (412-01A Air Distribution and Filtering, Removal and Installation).
4.

Refer to: Windshield Wiper Motor (501-16 Wipers and Washers, Removal and Installation).

5. Refer to: Instrument Panel Reinforcement (501-12 Instrument Panel and Console, Removal and Installation).

6. Refer to: Steering Column (211-04 Steering Column, Removal and Installation).

7. **CAUTION:**

Make sure that all openings are sealed. Use new blanking caps.

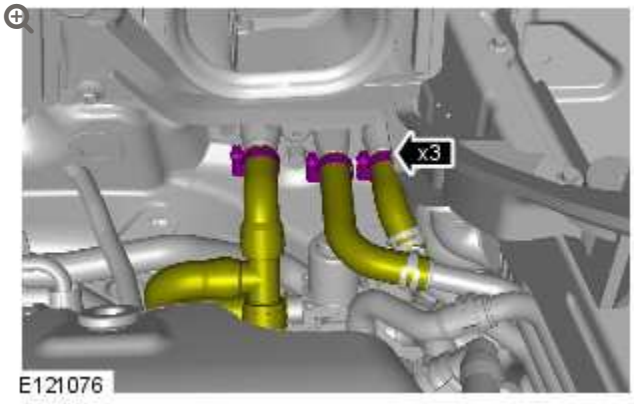

- Using 3 suitable pipe clamps, clamp the 3 heater core coolant hoses.
- Position a container to collect the fluid spillage.

8.

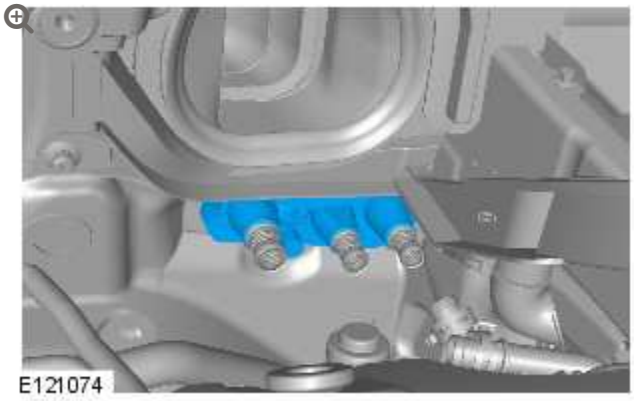

9.

CAUTIONS:

- Make sure that all openings are sealed. Use new blanking caps.
- Install new o-ring seals

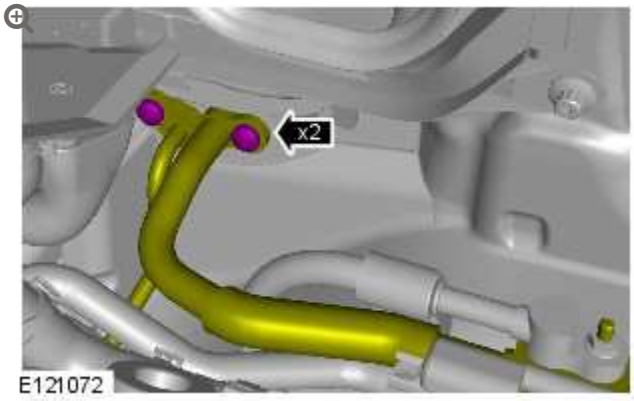

Torque: **25 Nm**

10.

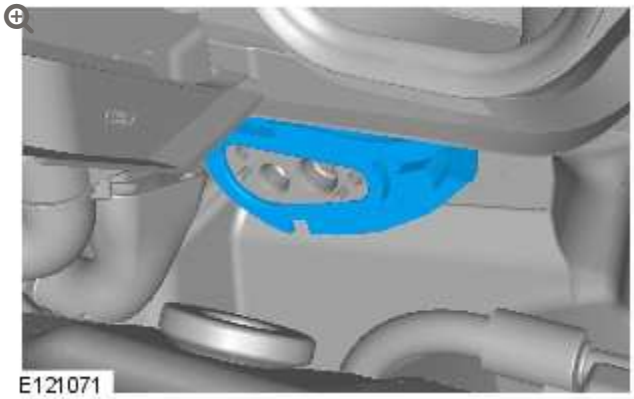

11.

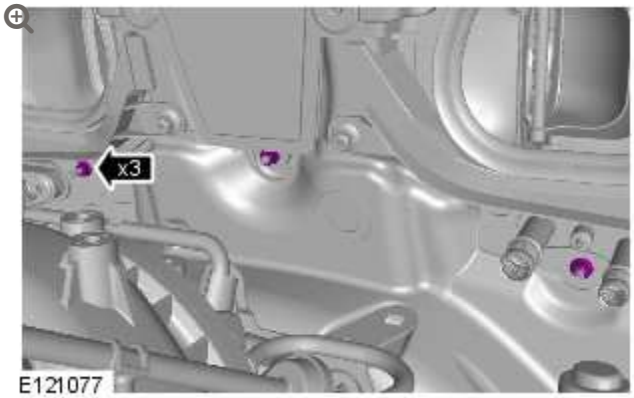

Torque: **10 Nm**

12.

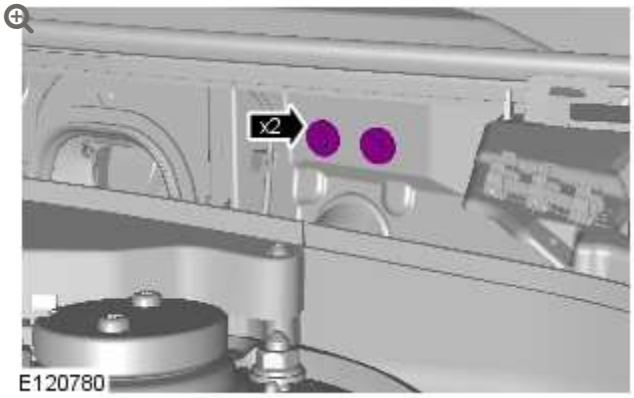

Torque: **25 Nm**

13.

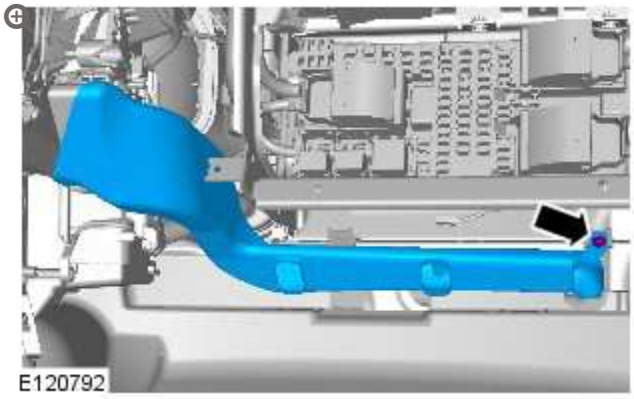

Torque: **6 Nm**

14.

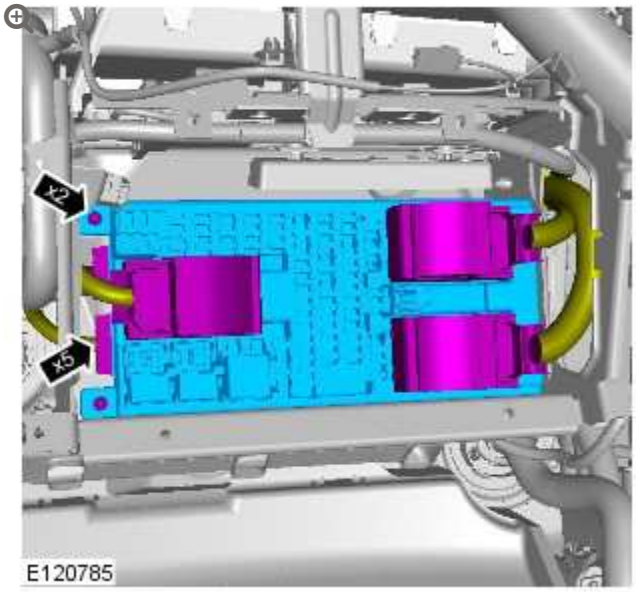

Torque: **8 Nm**

15.

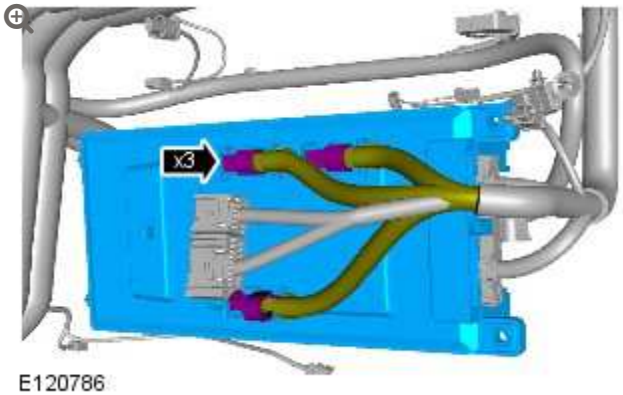

16.

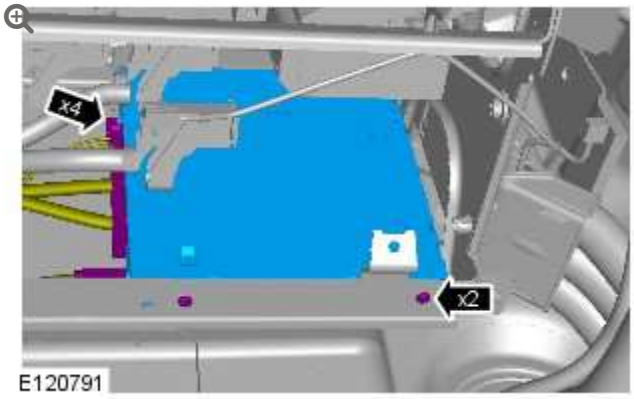

Torque: **6 Nm**

17.

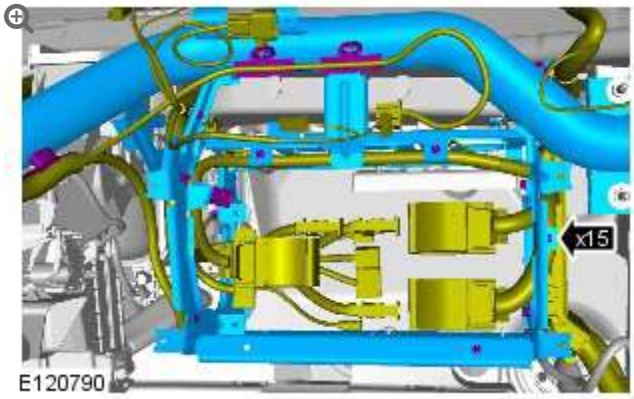

18.

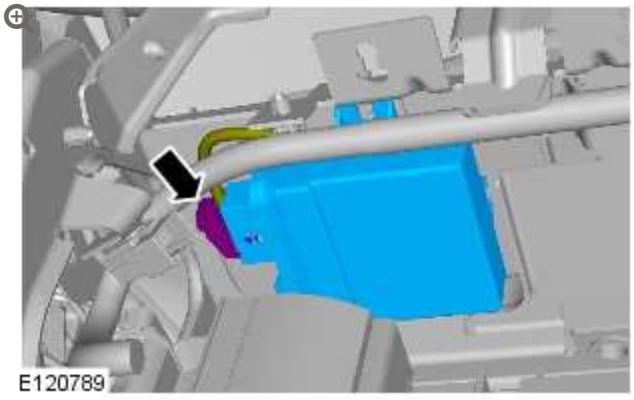

19.

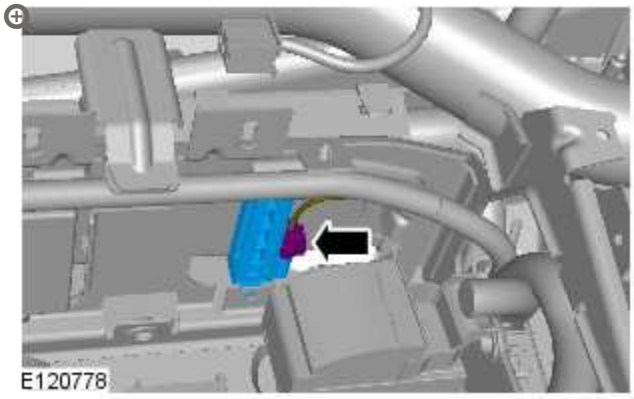

20.

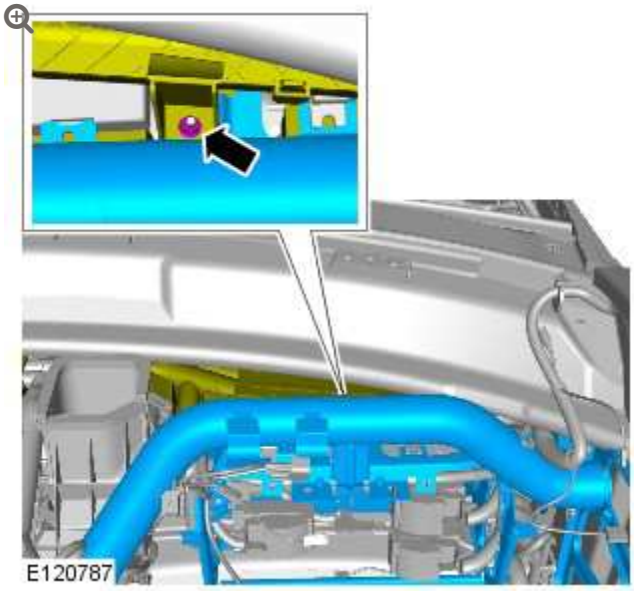

Torque: **6 Nm**

21.

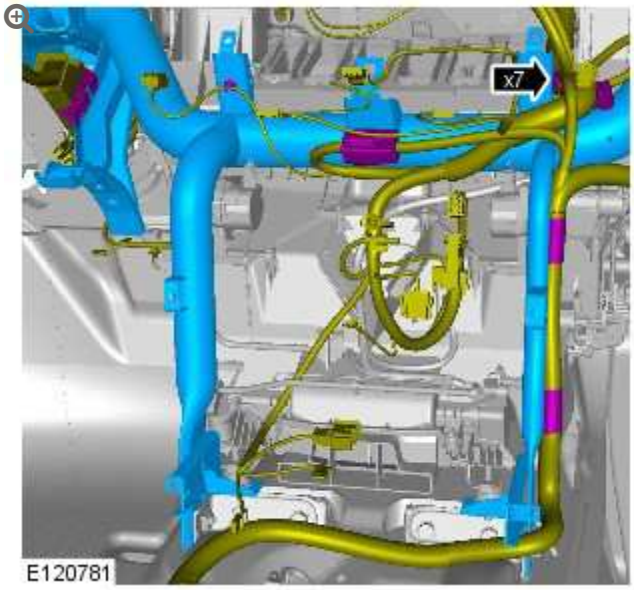

22.

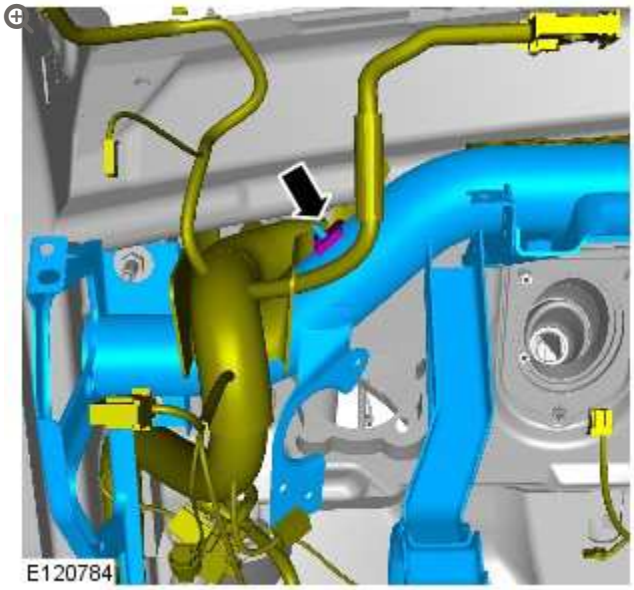

23.

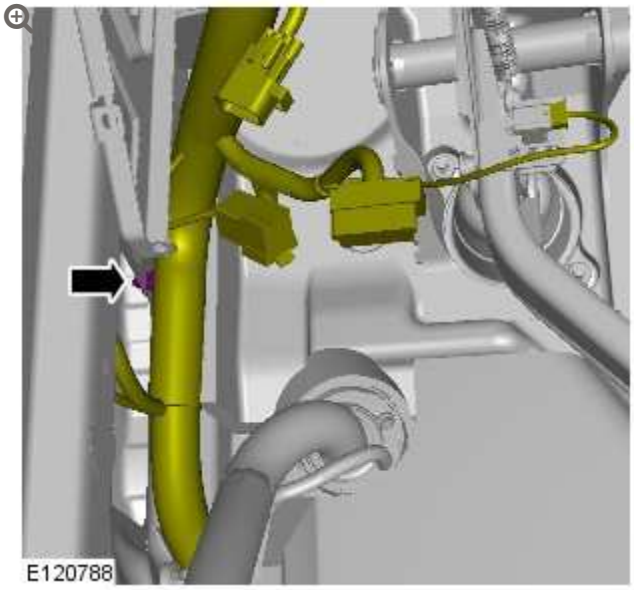

24.

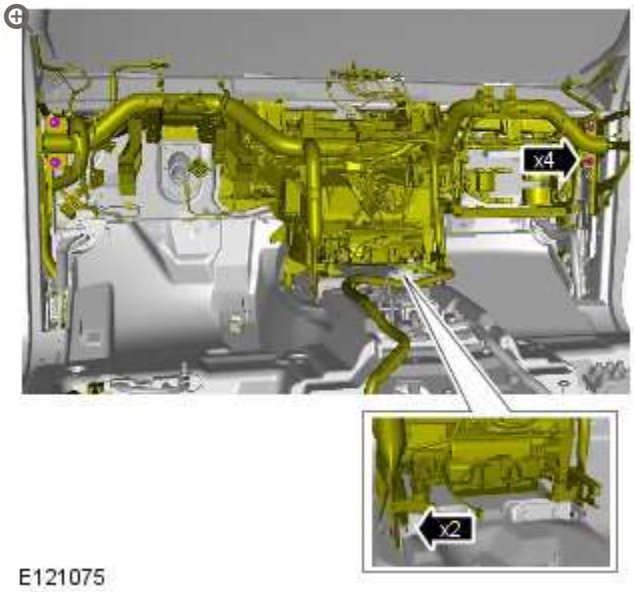

Torque: **25 Nm**

25.

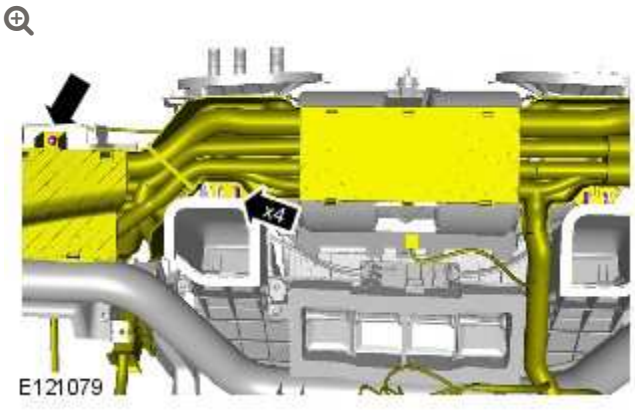

Torque: **6 Nm**

26.

NOTE:

Note the position of the wiring harnesses to aid installation.

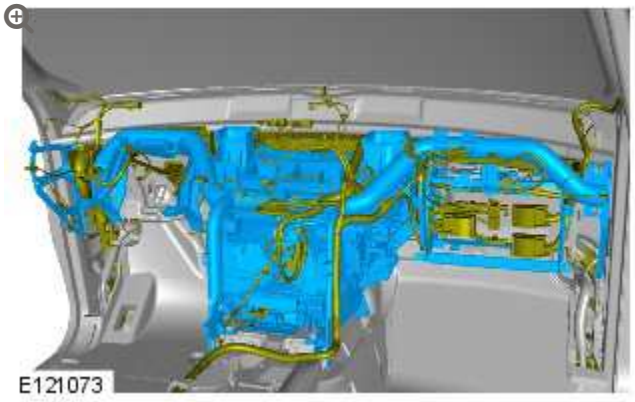

27.

NOTE:

Do not disassemble further if the component is removed for access only.

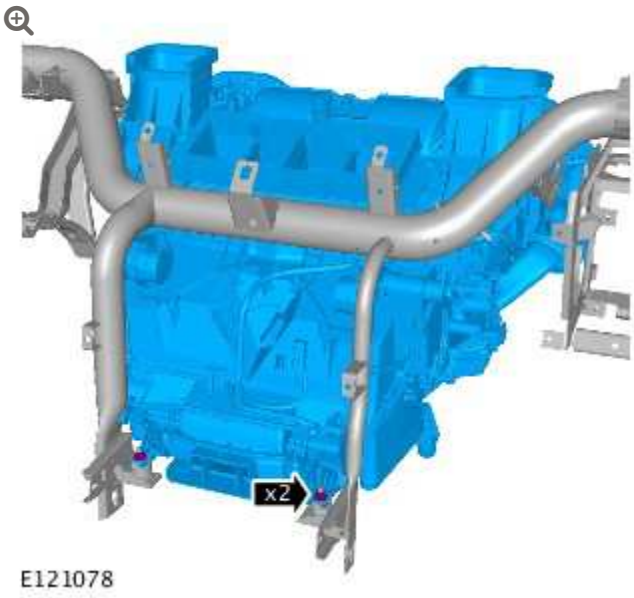

Torque: **8 Nm**

28.

NOTE:

Do not disassemble further if the component is removed for access only.

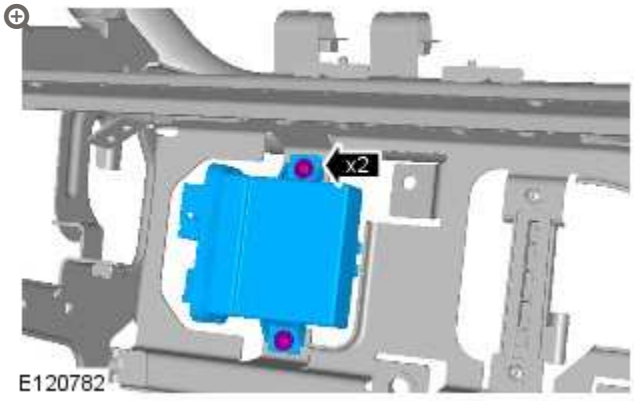

Torque: **6 Nm**

29.

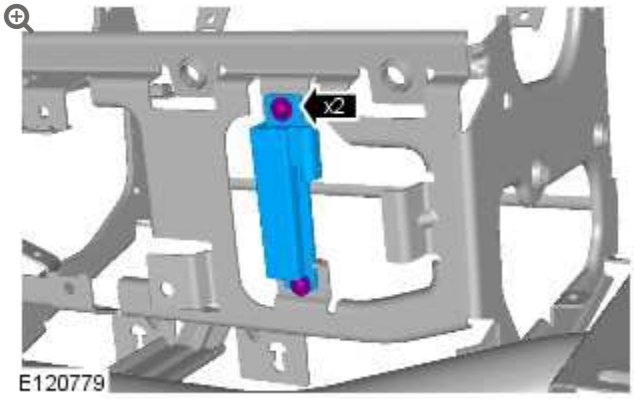

Torque: **6 Nm**

INSTALLATION

1. To install, reverse the removal procedure.

INSTRUMENT PANEL AND CONSOLE

LOWER CENTER REGISTERS PANEL ASSEMBLY (G1236315)

REMOVAL AND INSTALLATION

REMOVAL

WARNINGS:

- Persons working on the supplemental restraint system (SRS) must be fully trained and have been issued with the safety guidelines.
- Allow a period of 10 minutes to elapse after disconnecting the battery before undertaking any work on the SRS.
- The SRS electrical connectors are unique. DO NOT force, or attempt to connect electrical connectors to the wrong sockets.
- The correct procedures must always be used when working on SRS components.
- It is imperative that before any work is undertaken on the SRS system, the appropriate information is read thoroughly.
- Always disconnect both battery cables before beginning work on the SRS system. Disconnect the ground cable first. Never reverse connect the battery.
- Take extra care when handling SRS components.

1. Make the air bag supplemental restraint system (SRS) safe.
   Refer to: Standard Workshop Practices (100-00, Description and Operation).

2. Disconnect the battery ground cable.
   Refer to: Specifications (414-00, Specifications).

3. Refer to: Instrument Panel Lower Section (501-12, Removal and Installation).

4.

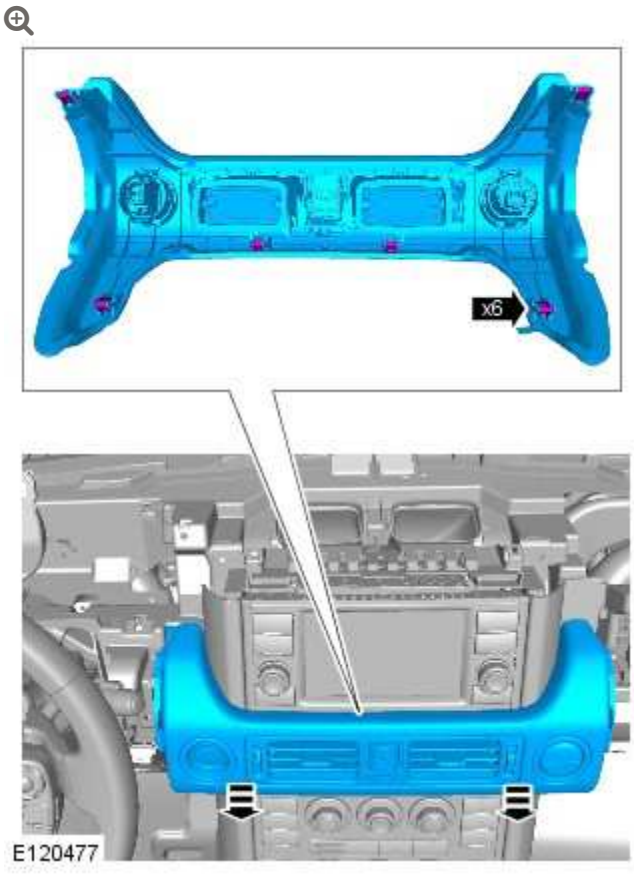

5.

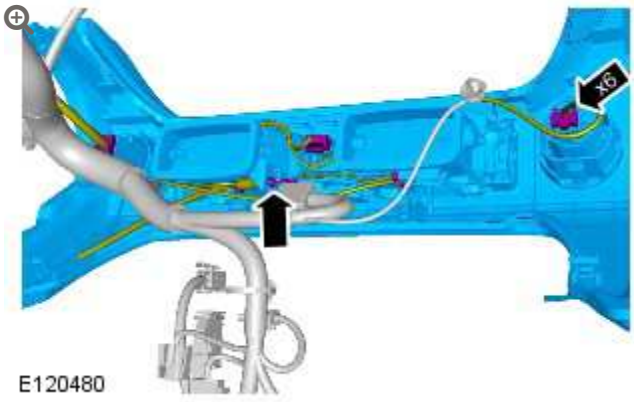

6.

NOTE:

Do not disassemble further if the component is removed for access only.

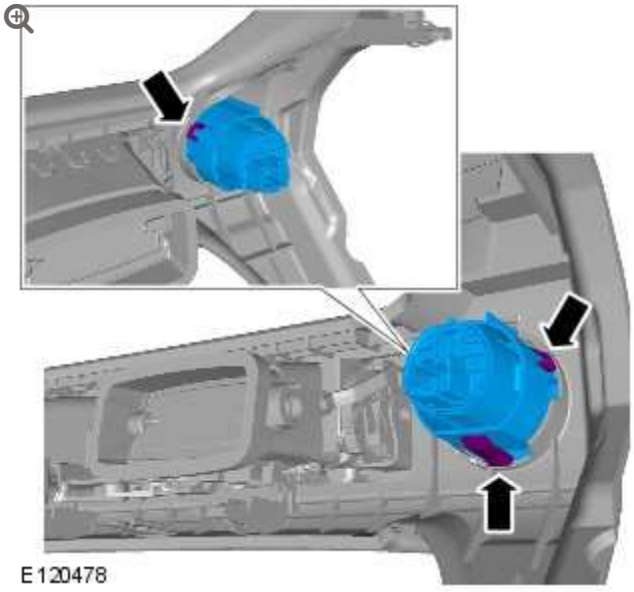
E120478

7.

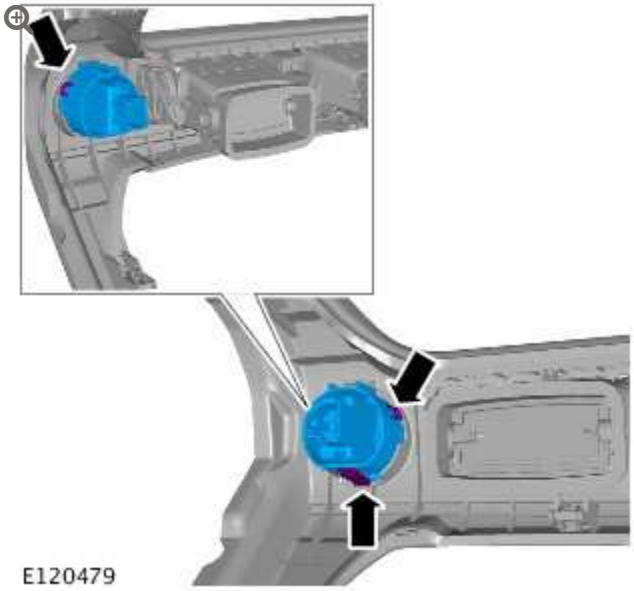
E120479

8.

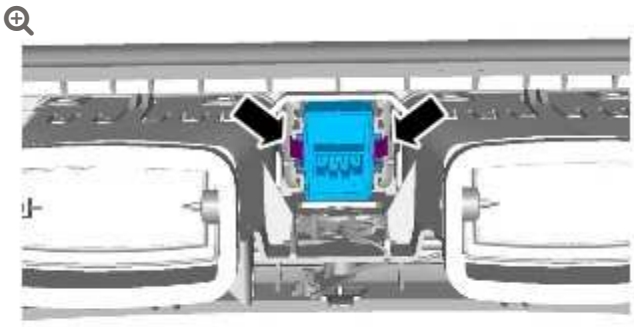

E120475

9.

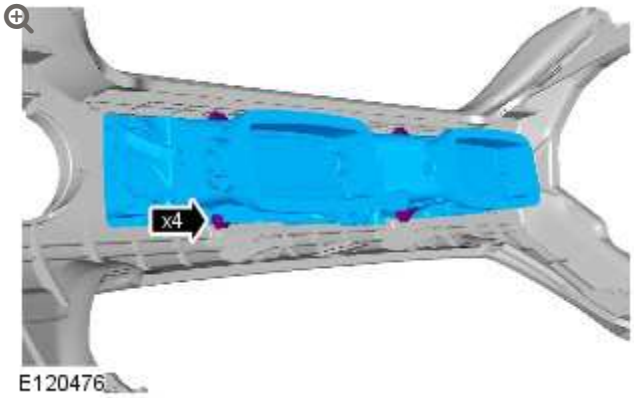

E120476

INSTALLATION

1. To install, reverse the removal procedure.

INSTRUMENT PANEL AND CONSOLE

LOWER GLOVE COMPARTMENT (G892740)

REMOVAL AND INSTALLATION

76.52.03	GLOVE COMPARTMENT - RENEW - INCLUDES ADJUSTMENT	ALL DERIVATIVES	0.8	USED WITHINS	+

REMOVAL

WARNINGS:

- Persons working on the supplemental restraint system (SRS) must be fully trained and have been issued with the safety guidelines.
- Allow a period of 10 minutes to elapse after disconnecting the battery before undertaking any work on the SRS.
- The SRS electrical connectors are unique. DO NOT force, or attempt to connect electrical connectors to the wrong sockets.
- The correct procedures must always be used when working on SRS components.
- It is imperative that before any work is undertaken on the SRS system, the appropriate information is read thoroughly.
- Always disconnect both battery cables before beginning work on the SRS system. Disconnect the ground cable first. Never reverse connect the battery.
- Take extra care when handling SRS components.

1. Make the air bag supplemental restraint system (SRS) safe.
   For additional information, refer to: Standard Workshop Practices (100-00, Description and Operation).

2. Open the lower glove compartment.

3. Disconnect the battery ground cable.
   For additional information, refer to: Specifications (414-00, Specifications).

4.

Remove the cowl side trim panel.
For additional information, refer to: Cowl Side Trim Panel (501-05, Removal and Installation).

5. Remove the floor console extension trim panel.
For additional information, refer to: Floor Console Extension (501-12, Removal and Installation).

6. 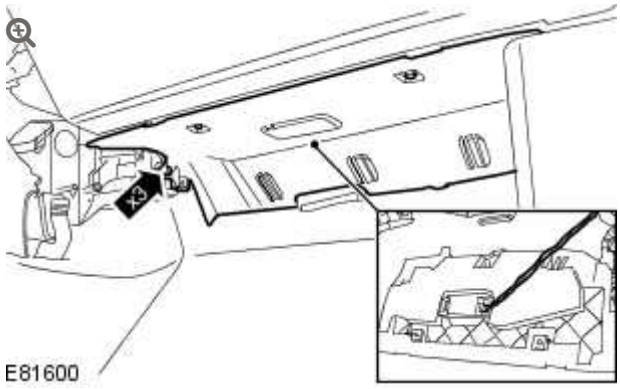

Remove the passenger side closing trim panel.

- Remove the 3 screws.
- Disconnect the footwell lamp electrical connector.

7. Remove the passenger side register trim panel.
For additional information, refer to: Passenger Side Register Trim Panel (412-01, Removal and Installation).

8. 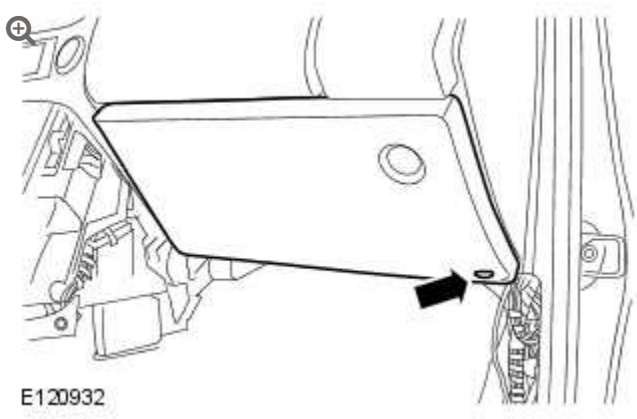

Release the lower glove compartment.

- Remove the retaining screw.

9.

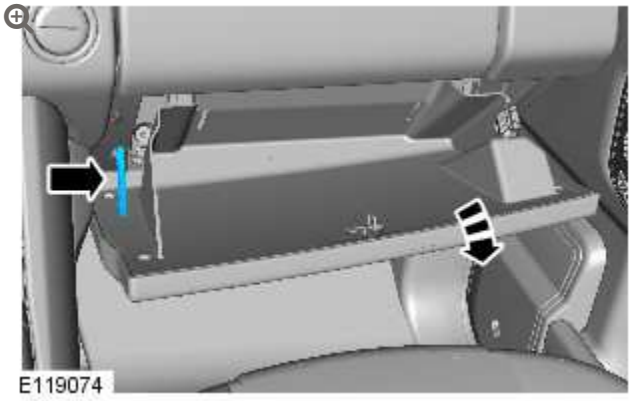

Open the lower glove compartment to the service position.

10.

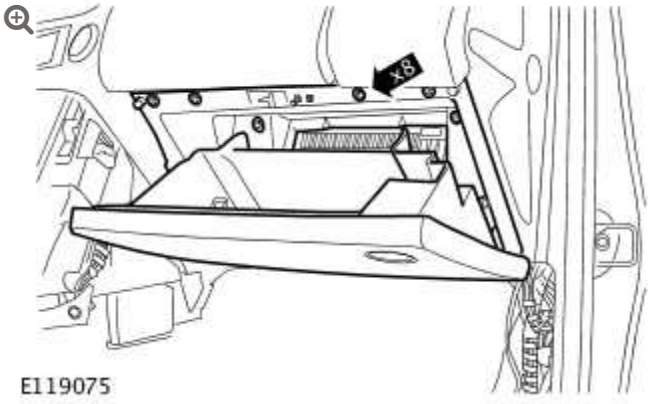

Remove the 8 screws from the lower glove compartment.

11.

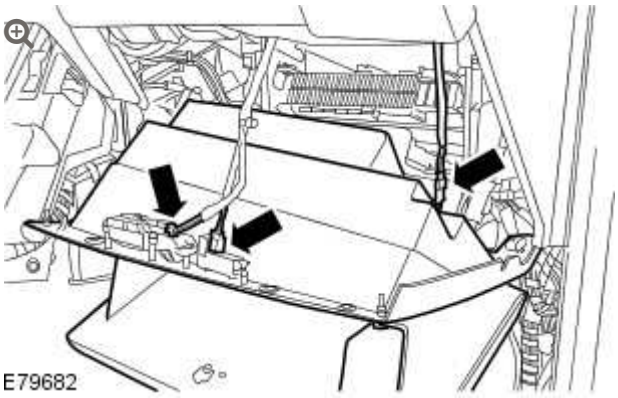

Remove the lower glove compartment.

-

Disconnect the electrical connector from the footwell lamp.

- Disconnect the electrical connector from the lower glove compartment lamp.
- Disconnect the electrical connector from the lower glove compartment latch.

12. **NOTE:**

Do not disassemble further if the component is removed for access only.

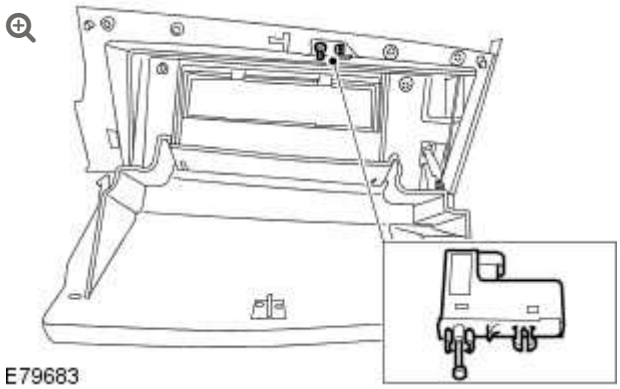
E79683

Remove the lower glove compartment lamp.

13.

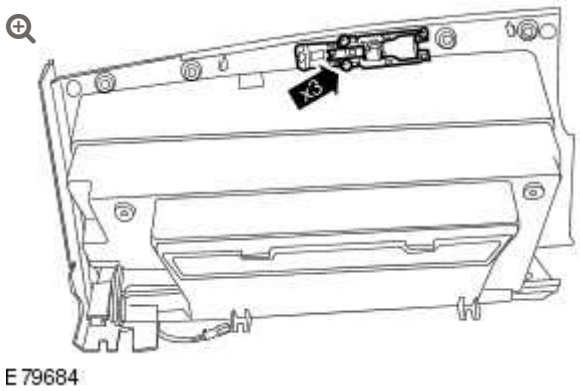

E79684

Remove the lower glove compartment latch.

- Remove the 3 screws.

14. 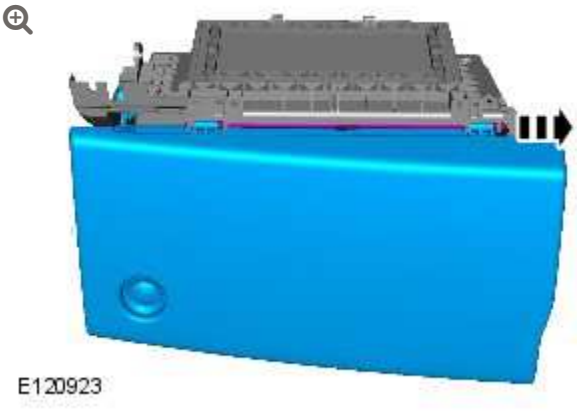

Remove the lower glove compartment lid.

INSTALLATION

1. Install the lower glove compartment lid.
   - Position the lower glove compartment striker.
   - Install the 6 screws to the lower glove compartment lid .

2. Install the lower glove compartment latch.
   - Install the 3 screws.

3. Install the lower glove compartment lamp.

4. Install the lower glove compartment.
   - Connect the lower glove compartment latch electrical connector.
   - Connect the lower glove compartment lamp electrical connector.
   - Connect the footwell lamp electrical connector.
   - Align the lower glove compartment.

5. Secure the lower glove compartment.
   - Install the 8 screws.

6. Close the lower glove compartment.

7. Attach the lower glove compartment.
   - Install the retaining screw.

8. Install the passenger side register trim panel.
   For additional information, refer to: Passenger Side Register Trim Panel (412-01, Removal and Installation).

9. Install the passenger side closing trim panel.
   - Connect the footwell lamp electrical connector.
   - Install the 3 screws.

10. Install the floor console extension trim panel.
    For additional information, refer to: Floor Console Extension (501-12, Removal and Installation).

11. Install the cowl side trim panel.
    For additional information, refer to: Cowl Side Trim Panel (501-05, Removal and Installation).

12. Connect the battery ground cable.
    For additional information, refer to: Specifications (414-00, Specifications).

INSTRUMENT PANEL AND CONSOLE

LOWER GLOVE COMPARTMENT LID (G892741)

REMOVAL AND INSTALLATION

REMOVAL

1. Open the lower glove compartment.

2. 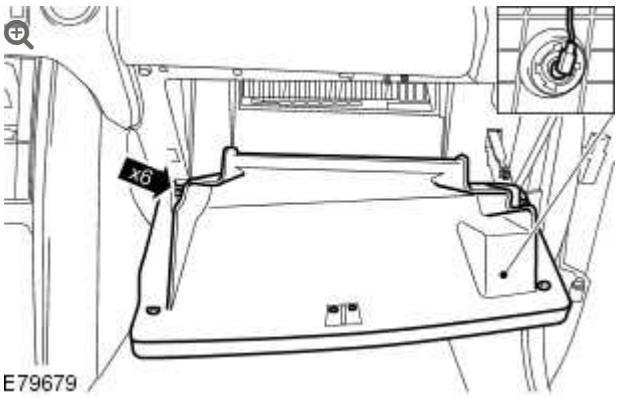

   Remove the lower glove compartment lid.

   - Remove the 6 screws from the lower glove compartment lid.
   - Collect the lower glove compartment striker.
   - Disconnect the footwell lamp electrical connector.

3. **NOTE:**

> Do not disassemble further if the component is removed for access only.

Remove the footwell lamp assembly.

- Release the 2 clips.

INSTALLATION

1. Install the footwell lamp assembly.

2. Install the lower glove compartment lid.
   - Connect the footwell lamp electrical connector.
   - Position the lower glove compartment striker.
   - Install the 6 screws.

3. Close the lower glove compartment.

INSTRUMENT PANEL AND CONSOLE

OVERHEAD CONSOLE (G552917)

REMOVAL AND INSTALLATION

76.25.02	CONSOLE - HEADLINER - FRONT - RENEW	ALL DERIVATIVES	0.2	USED WITHINS	+

REMOVAL

1.

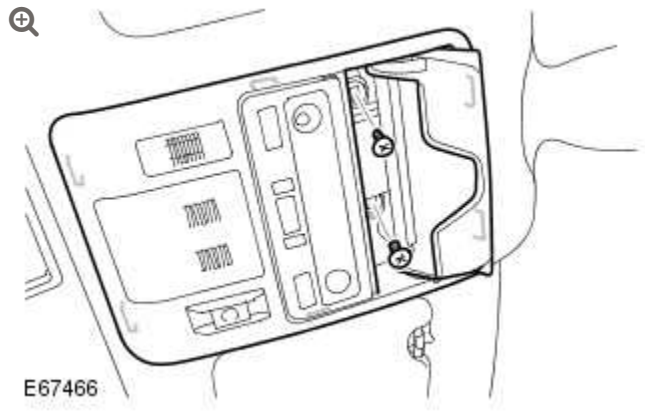

Release the overhead console.

- Open the sunglasses compartment.
- Remove the 2 screws.
- Release the 6 clips.

2.

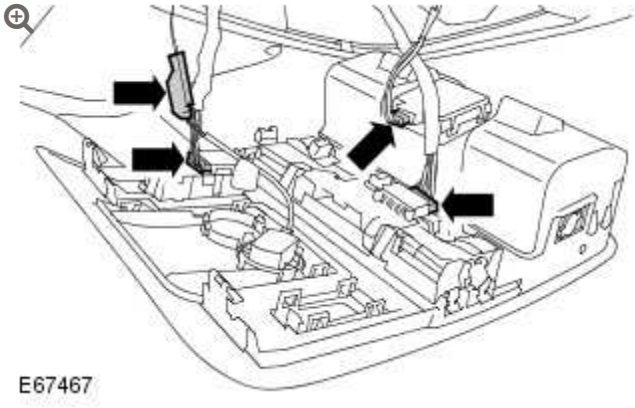

Remove the overhead console.

- Disconnect the 4 electrical connectors.

3.

NOTE:

Do not disassemble further if the component is removed for access only.

Remove the front interior lamp.

- Release the 2 clips.

4.

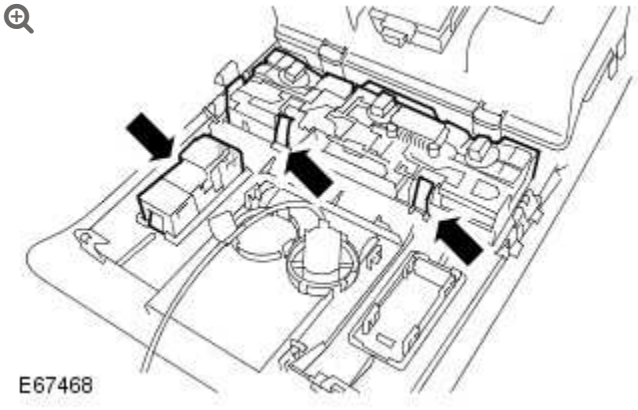

Remove the roof opening panel switch.

- Carefully release the 2 clips.

5. Remove the overhead console blanking trim.

- Release the 4 clips.

6. Release the tire pressure monitoring system receiver.

7. Remove the cellular phone microphone.
   - Release the 3 clips.

8. 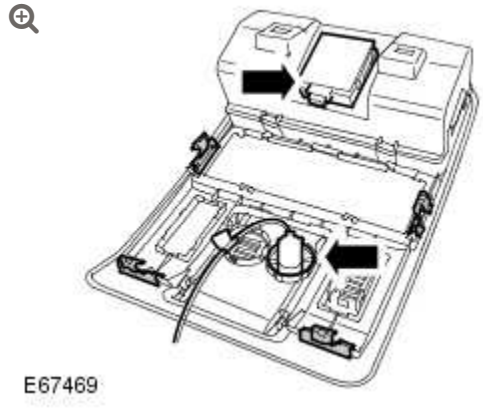

   Remove the 4 clips from the overhead console.

INSTALLATION

1. Install the 4 clips to the overhead console.

2. Install the cellular phone microphone.
   - Secure the 3 clips.

3. Secure the tire pressure monitoring system receiver.

4. Install the overhead console blanking trim.
   - Secure the 4 clips.

5. Install the roof opening panel switch.
   - Secure in the 2 clips.

6. Install the front interior lamp.
    - Secure the 2 clips.

7. Install the overhead console.
    - Connect the 4 electrical connectors.

8. Secure the overhead console.
    - Secure the 6 clips.
    - Install the 2 screws.
    - Close the sunglasses compartment.

INSTRUMENT PANEL AND CONSOLE

REAR SEAT CENTER CONSOLE – ULTIMATE

(G1393710)

REMOVAL AND INSTALLATION

REMOVAL

NOTES:

- Removal steps in this procedure may contain installation details.
- Some variation in the illustrations may occur, but the essential information is always correct.

1.

NOTE:

RH side only.

Refer to: Rear Seat - Vehicles With: Rear Business Seats (501-10, Removal and Installation).

2.

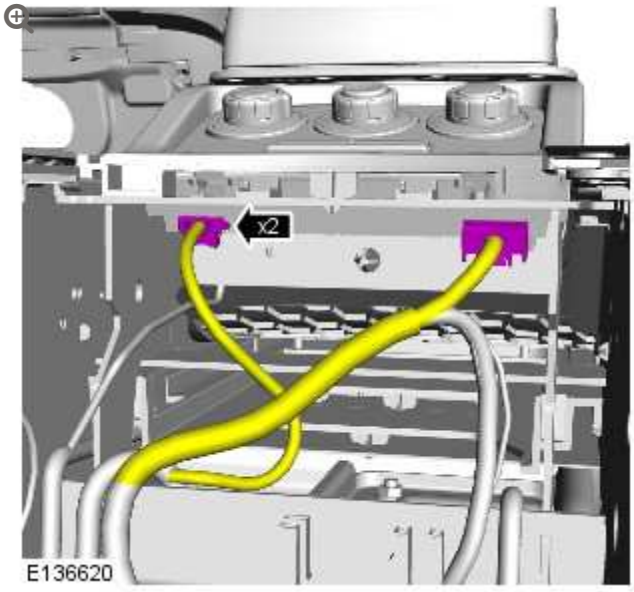

3.

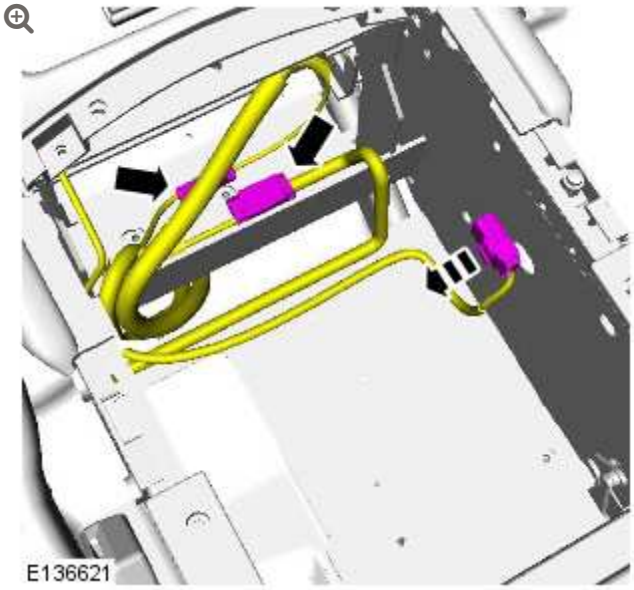

- Carefully feed the wiring harness under the seat base.

4.

NOTE:

RH illustration shown, LH is similar.

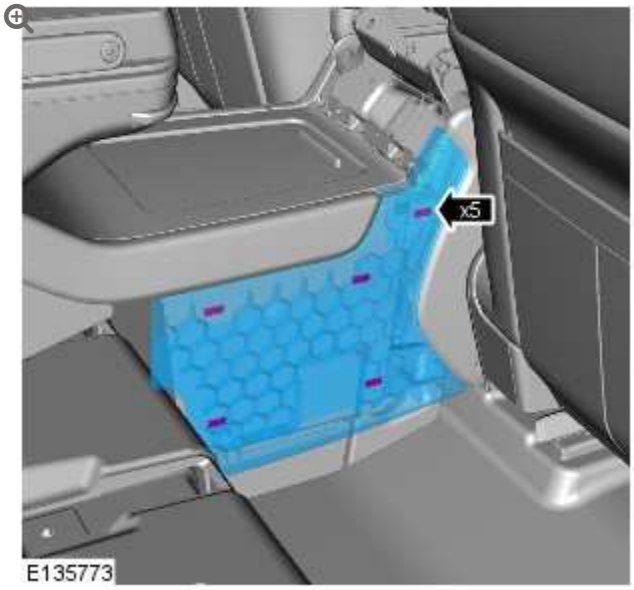

5.

NOTE:

RH illustration shown, LH is similar.

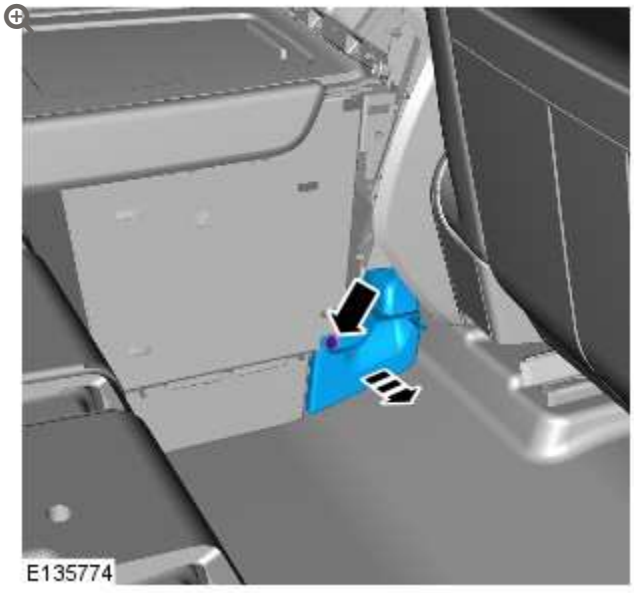

6.

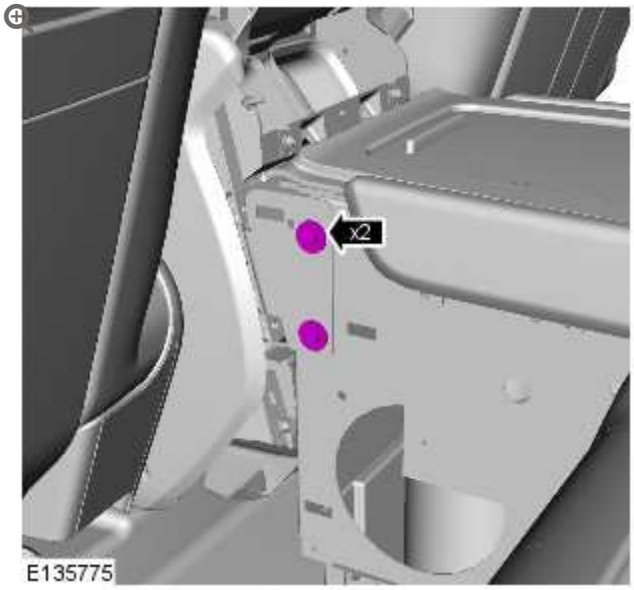

- *Torque:* **9 Nm**

7.

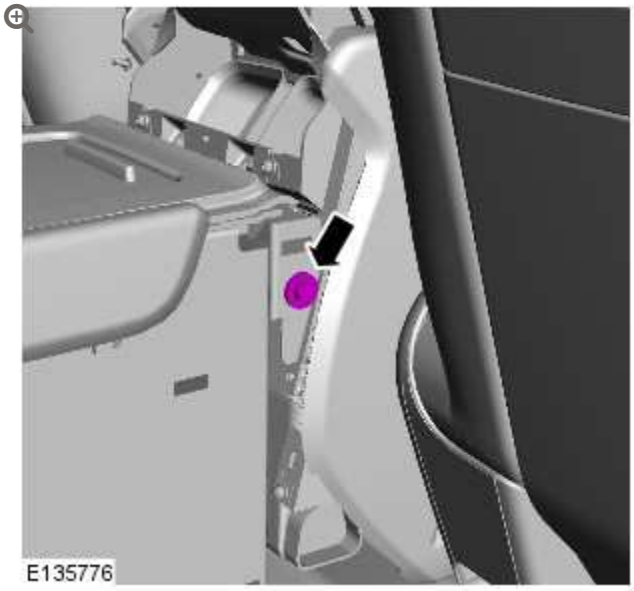

- *Torque:* **9 Nm**

8.

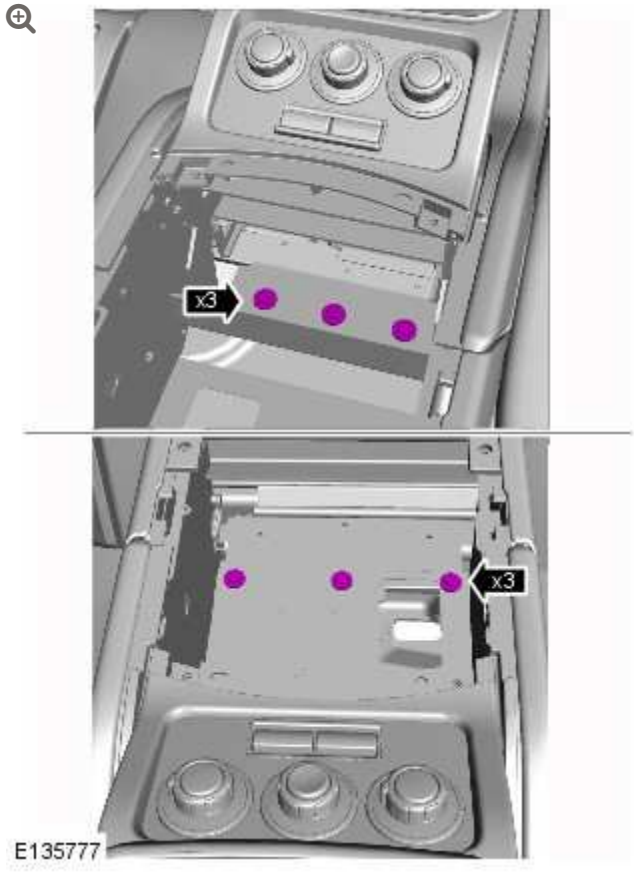

- *Torque:* **9 Nm**

9.

CAUTIONS:

- Protect the surrounding trim to avoid damage.
- Take extra care not to damage the wiring harnesses.

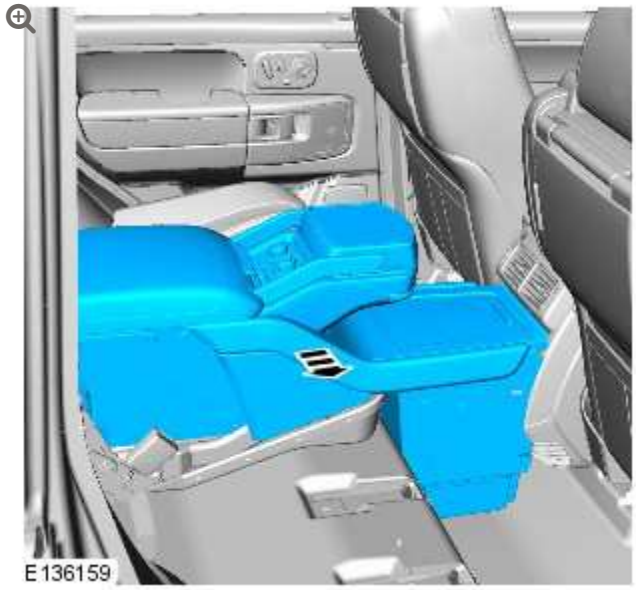

INSTALLATION

1. To install, reverse the removal procedure.

INSTRUMENT PANEL AND CONSOLE

REAR SEAT CENTER CONSOLE TABLE – ULTIMATE (G1393711)

REMOVAL AND INSTALLATION

REMOVAL

NOTES:

- Removal steps in this procedure may contain installation details.
- Some variation in the illustrations may occur, but the essential information is always correct.

1.



2.



3.

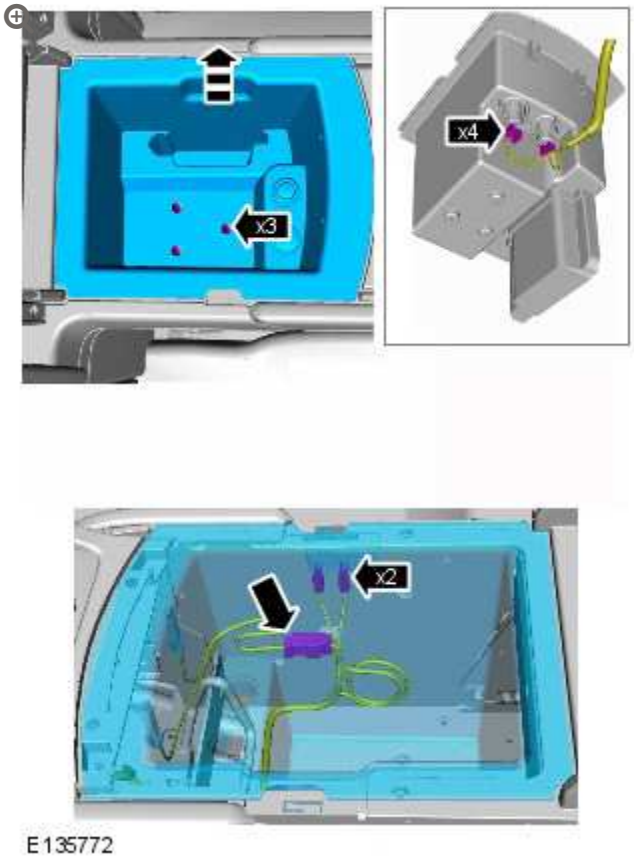

E135772

- *Torque:* **1.5 Nm**

4.



5.

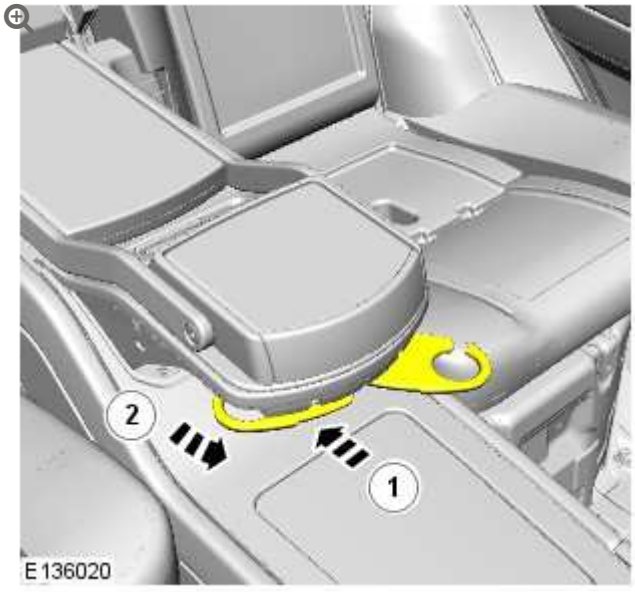

6.

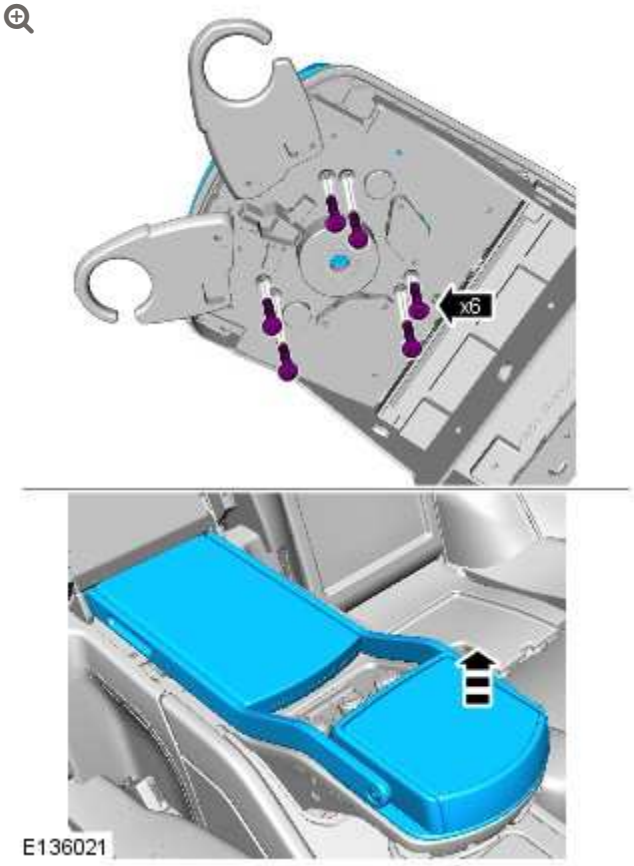

- *Torque:* **9 Nm**

7.

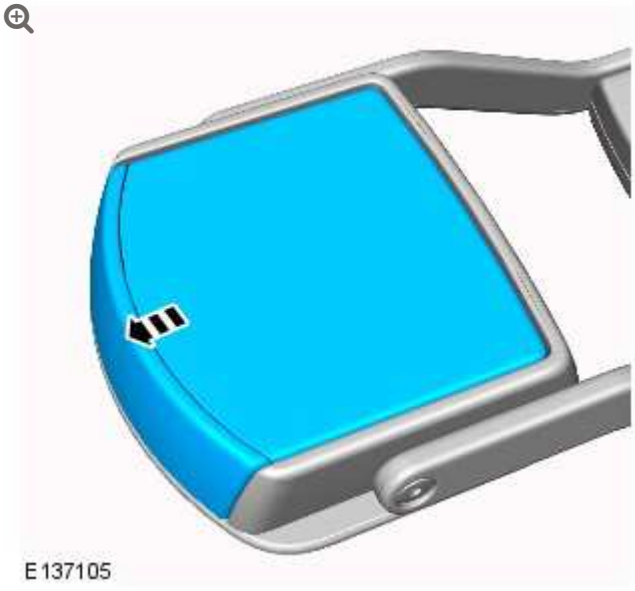

8.

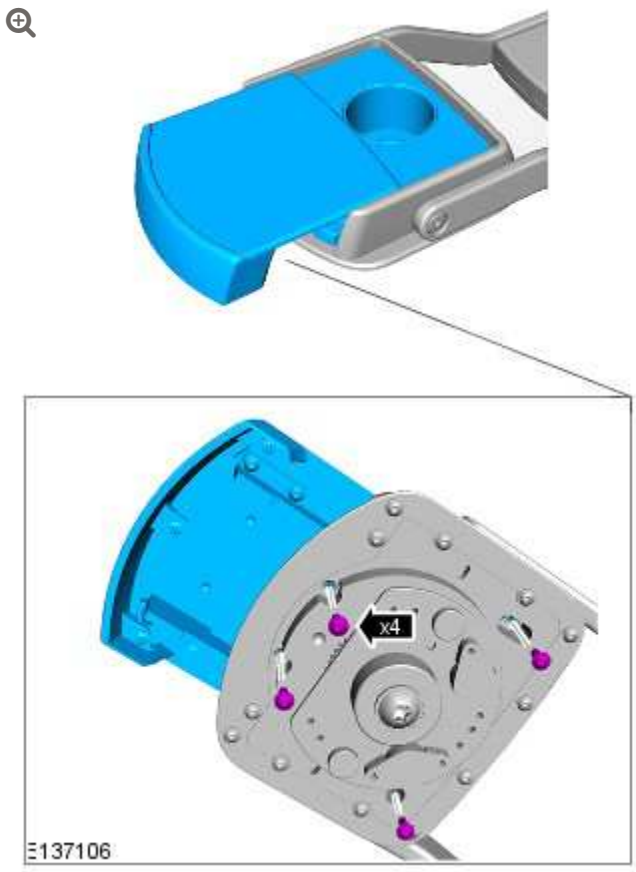

9.

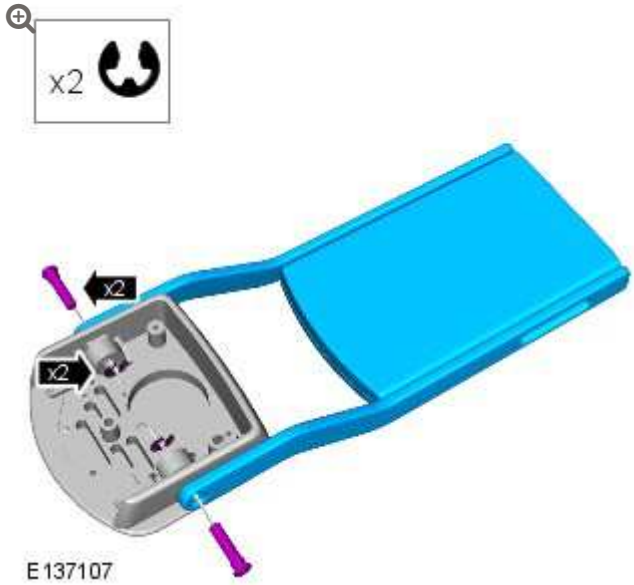

- *Torque:* **2 Nm**

INSTALLATION

1. To install, reverse the removal procedure.

INSTRUMENT PANEL AND CONSOLE

ROTATING TRAY AND CUPHOLDER ASSEMBLY – ULTIMATE (G1429301)

REMOVAL AND INSTALLATION

REMOVAL

NOTES:

- Removal steps in this procedure may contain installation details.
- Some variation in the illustrations may occur, but the essential information is always correct.

1.



2.



3.

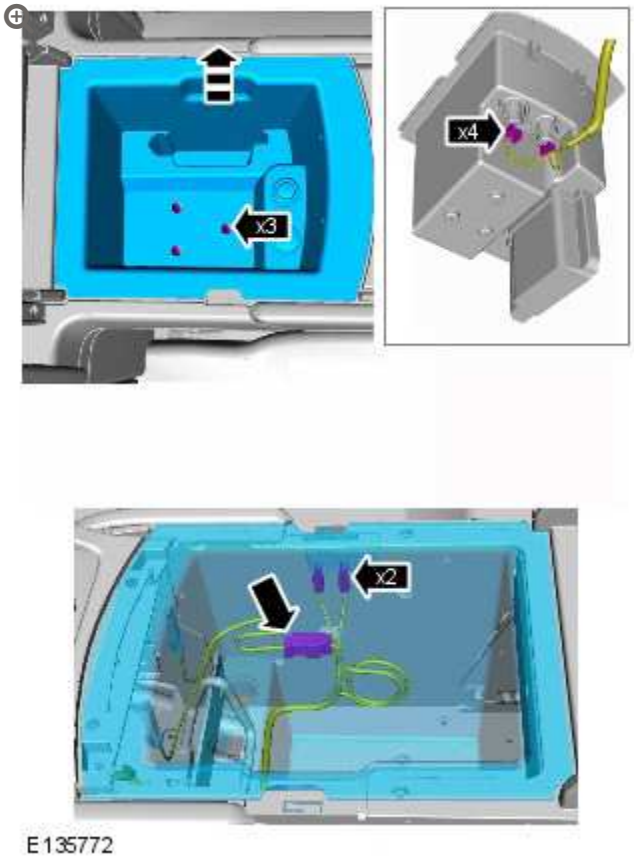

E135772

Torque: **1.5 Nm**

4.



5.

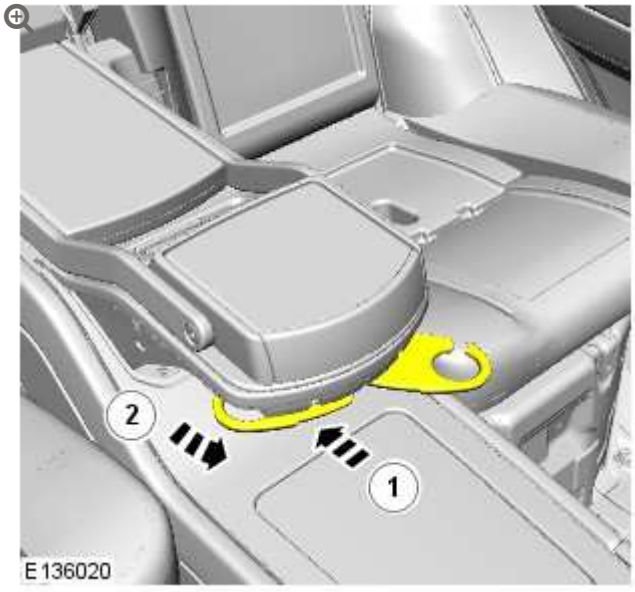

6.

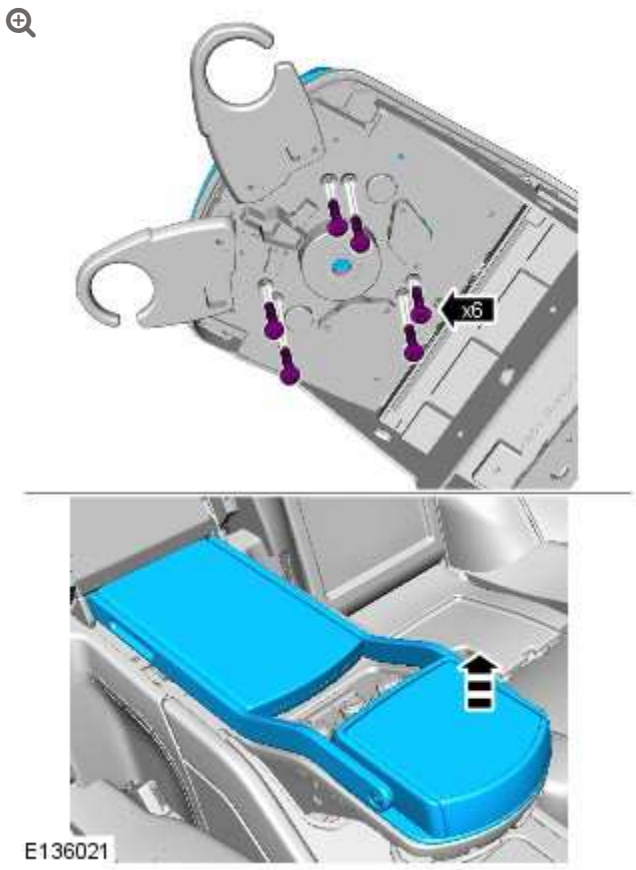

Torque: **9 Nm**

7.

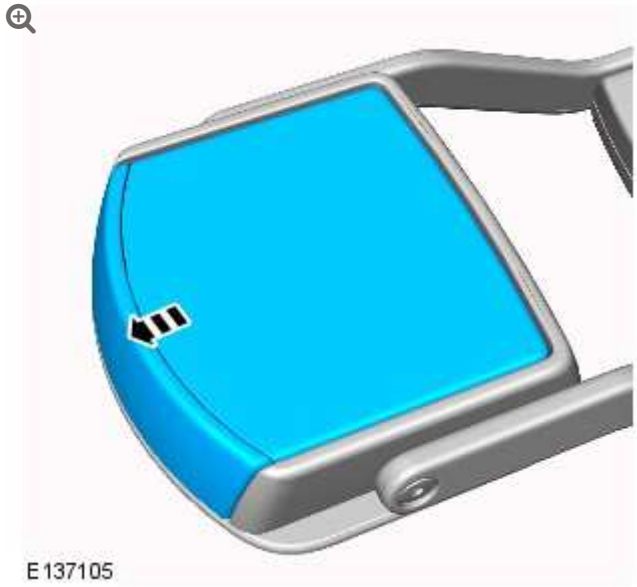

8.

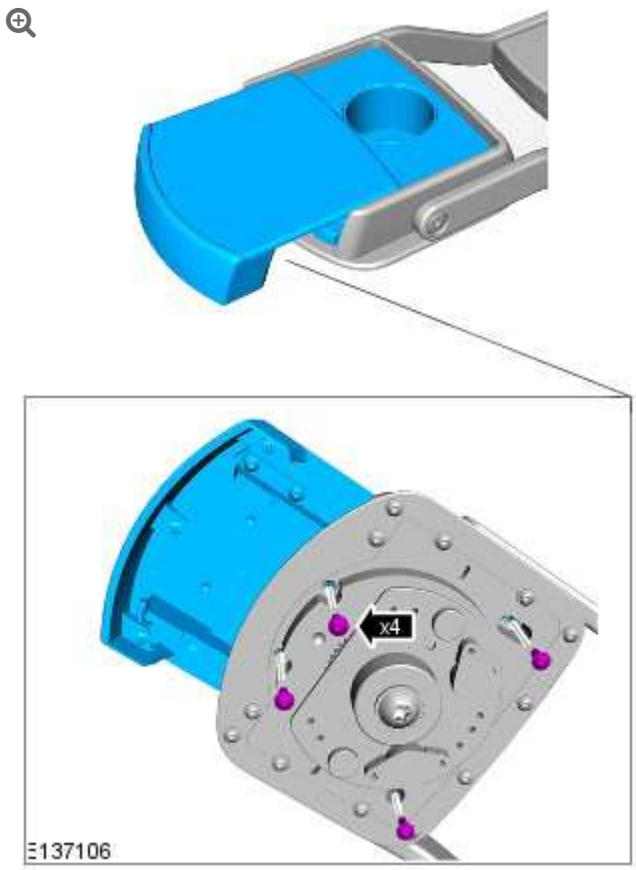

9.

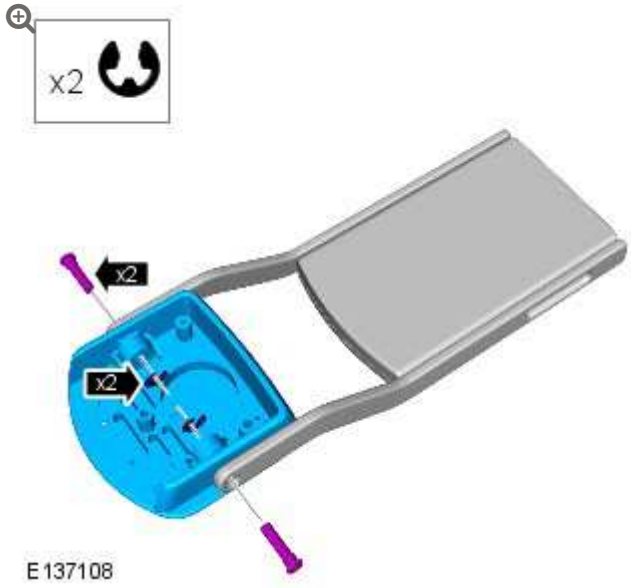

- *Torque:* **2 Nm**

INSTALLATION

1. To install, reverse the removal procedure.

INSTRUMENT PANEL AND CONSOLE

SPECIFICATIONS

Torque Specifications

DESCRIPTION	NM	LB-FT
Floor console lid Torx bolts	3	2
Floor console Torx bolts	10	7

INSTRUMENT PANEL AND CONSOLE

UPPER GLOVE COMPARTMENT (G892742)

REMOVAL AND INSTALLATION

76.25.02	CONSOLE - HEADLINER - FRONT - RENEW	ALL DERIVATIVES	0.2	USED WITHINS	+

REMOVAL

WARNINGS:

- Persons working on the supplemental restraint system (SRS) must be fully trained and have been issued with the safety guidelines.
- Allow a period of 10 minutes to elapse after disconnecting the battery before undertaking any work on the SRS.
- The SRS electrical connectors are unique. DO NOT force, or attempt to connect electrical connectors to the wrong sockets.
- The correct procedures must always be used when working on SRS components.
- It is imperative that before any work is undertaken on the SRS system, the appropriate information is read thoroughly.
- Always disconnect both battery cables before beginning work on the SRS system. Disconnect the ground cable first. Never reverse connect the battery.
- Take extra care when handling SRS components.

1. Make the air bag supplemental restraint system (SRS) safe.
   For additional information, refer to: Standard Workshop Practices (100-00, Description and Operation).

2. Disconnect the battery ground cable.
   For additional information, refer to: Specifications (414-00, Specifications).

3. Remove the lower glove compartment.
   For additional information, refer to: Lower Glove Compartment (501-12, Removal and Installation).

4. 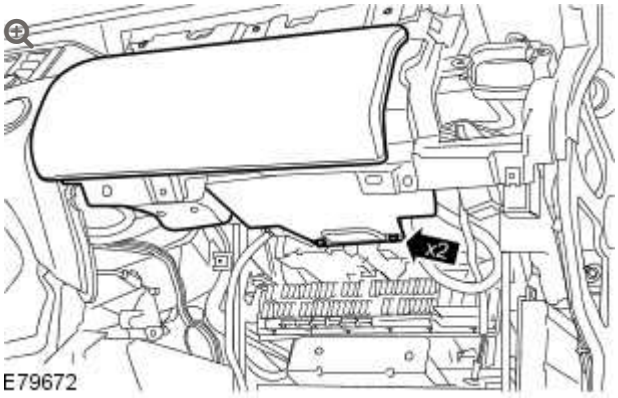

Remove the 2 screws from the compact disc (CD) changer bracket.

5. Open the upper glove compartment.

6. 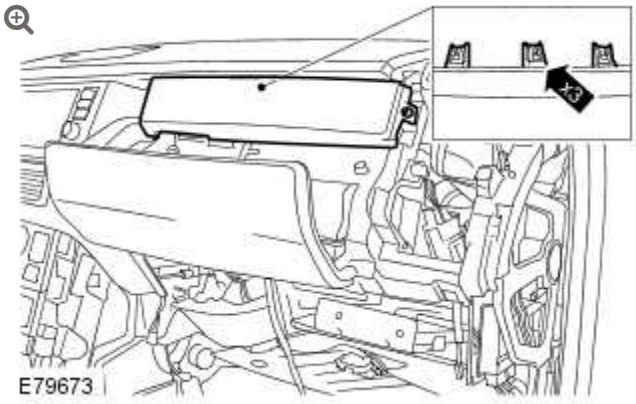

Remove the upper glove compartment finisher trim panel.

- Remove the screw.
- Release the 3 clips.

7.

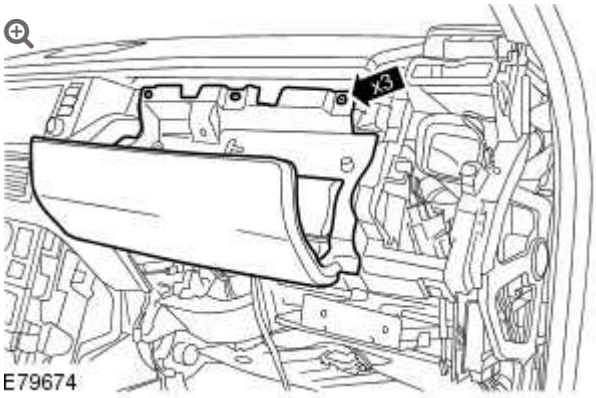

Remove the 3 screws from the upper glove compartment.

8.

CAUTION:

Care must be taken to avoid damaging the upper glove compartment release mechanism.

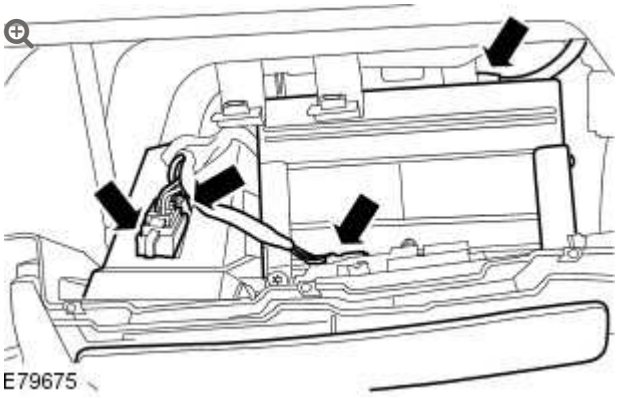

Remove the upper glove compartment.

- Disconnect the upper glove compartment latch electrical connector.
- If installed, disconnect the electrical connector from the portable camera docking station.
- Disconnect the coaxial cable from the portable camera docking station.
- Disconnect the CD changer electrical connector.

9. **NOTE:**

> Do not disassemble further if the component is removed for access only.

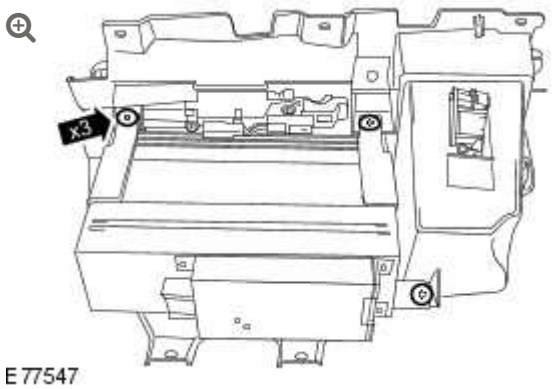

E77547

Remove the CD changer.

- Remove the 3 screws securing the CD changer bracket to the upper glove compartment.

10.

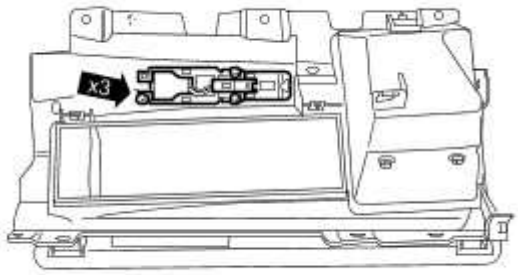

E79676

Remove the upper glove compartment latch.

- Remove the 3 screws.

11.

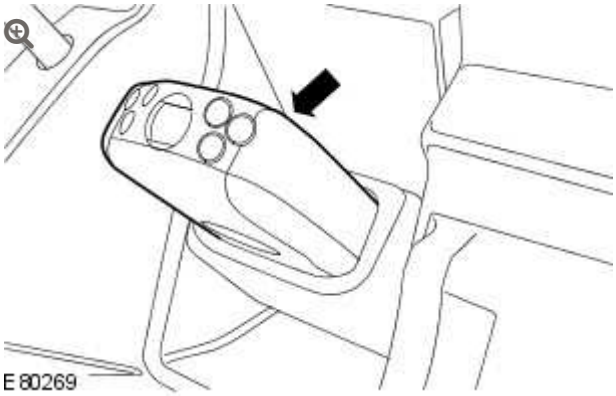

Release and remove the portable camera from the portable camera docking station.

12.

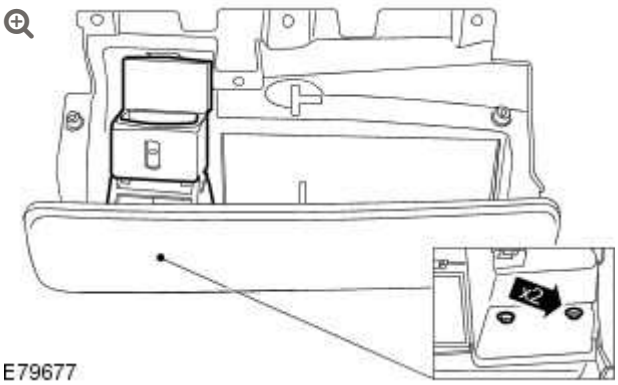

Remove the portable camera docking station.

- Remove the 2 screws.

13.



Remove the upper glove compartment lid.

- Remove the 6 screws from the upper glove compartment lid.

- Collect the upper glove compartment striker.

INSTALLATION

1. Install the upper glove compartment lid.
   - Position the upper glove compartment striker.
   - Install the 6 screws to the upper glove compartment lid.
2. Install the portable camera docking station.
   - Install the 2 screws.
3. Install the portable camera to the portable camera docking station.
4. Install the upper glove compartment latch.
   - Install the 3 screws.
5. Install the CD changer.
   - Install the 3 screws securing the CD changer bracket to the upper glove compartment.
6. **CAUTION:**

   Care must be taken to avoid damaging the upper glove compartment release mechanism.

   Install the upper glove compartment.
   - Connect the CD changer electrical connector.
   - Connect the portable camera docking station coaxial cable.

- Connect the portable camera docking station electrical connector.
- Connect the upper glove compartment latch electrical connector.

7. Install the 3 screws to the upper glove compartment.

8. Install the upper glove compartment finisher trim panel.
   - Secure the 3 clips.
   - Install the screw.

9. Close the upper glove compartment.

10. Install the 2 screws to the CD changer bracket.

11. Install the lower glove compartment.
    For additional information, refer to: Lower Glove Compartment (501-12, Removal and Installation).

12. Connect the battery ground cable.
    For additional information, refer to: Specifications (414-00, Specifications).

INSTRUMENT PANEL AND CONSOLE

UPPER GLOVE COMPARTMENT LID (G892743)

REMOVAL AND INSTALLATION

REMOVAL

1. Open the upper glove compartment.

2. 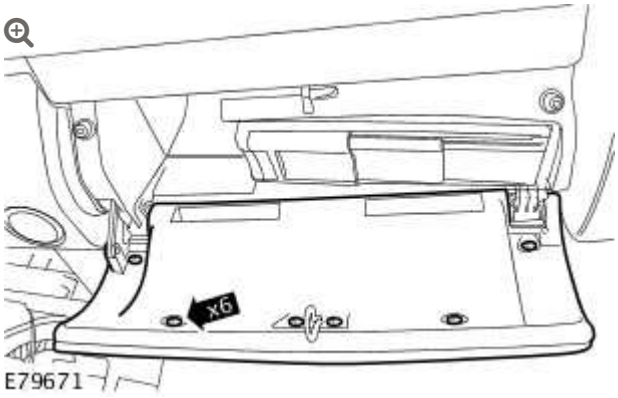

   Remove the upper glove compartment lid.

   - Remove the 6 screws from the upper glove compartment lid.
   - Collect the upper glove compartment striker.

INSTALLATION

1. Install the upper glove compartment lid.
   - Position the upper glove compartment striker.
   - Install the 6 screws.
2. Close the upper glove compartment.

EXTERIOR DOOR HANDLE MECHANISM (G914390)

REMOVAL AND INSTALLATION

REMOVAL

1. Remove the side air bag module.
   For additional information, refer to: Side Air Bag Module (501-20, Removal and Installation).

2. Disconnect the door speaker electrical connector.

3. Remove the front door inner weathershield.

4. 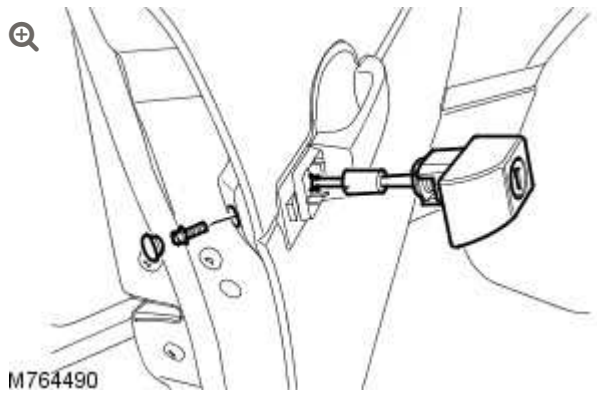

   Remove the grommet for access to the lock screw.

5. Remove the screw securing the lock and remove the lock assembly.

6. 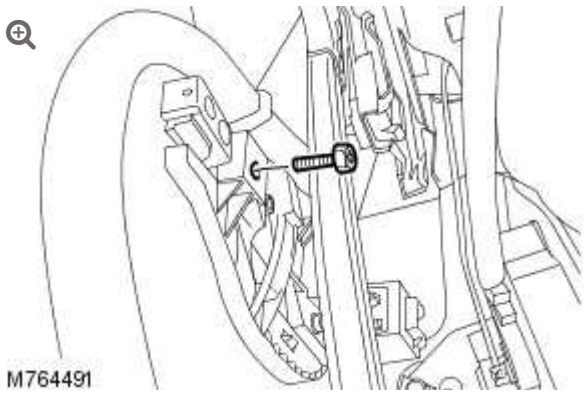

Remove the screw securing the exterior front door handle.

7. Remove the front door exterior handle.

8. 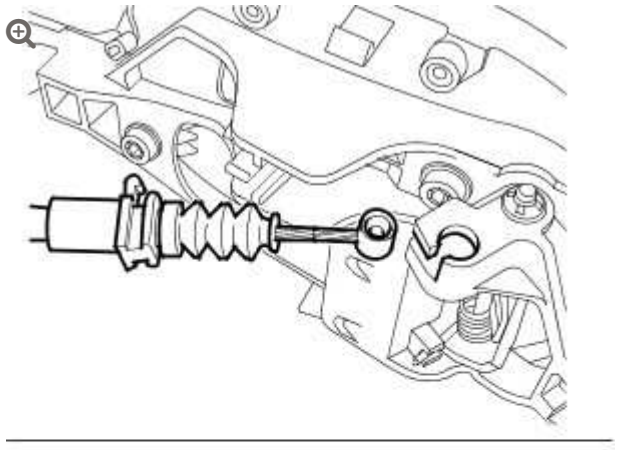

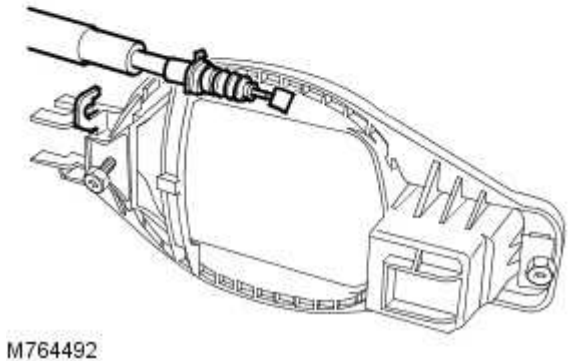

Disconnect the release cable from the exterior front door handle.

9. Remove the exterior front door handle.

10. Release the cable from the clip and collect the reinforcement.

INSTALLATION

1. Connect the latch release cable to door handle.

2. Position the inner reinforcement to the door.

3. Install the cable to the inner reinforcement and secure in the clip.

4. Install the exterior front door handle, align and install the screw.
   - Do not fully tighten at this stage.

5. Check for correct alignment.
   - Tighten the screw to 10 Nm (7 lb.ft).

6. Check the operation of the exterior front door handle and the lock.

7. Install the grommet.

8. Install the front door inner weathershield.

9. Connect the door speaker electrical connector.

10.

Install the side air bag module.

For additional information, refer to: Side Air Bag Module (501-20, Removal and Installation).

HANDLES, LOCKS, LATCHES AND ENTRY SYSTEMS

EXTERIOR FRONT DOOR HANDLE (G963547)

REMOVAL AND INSTALLATION

76.58.07	HANDLE - EXTERIOR - FRONT DOOR - RENEW	ALL DERIVATIVES	0.8	USED WITHINS	+

REMOVAL

1. Remove the front exterior door handle mechanism.
   For additional information, refer to: Exterior Door Handle Mechanism (501-14, Removal and Installation).

2. **NOTE:**

   Note the orientation of the return spring.

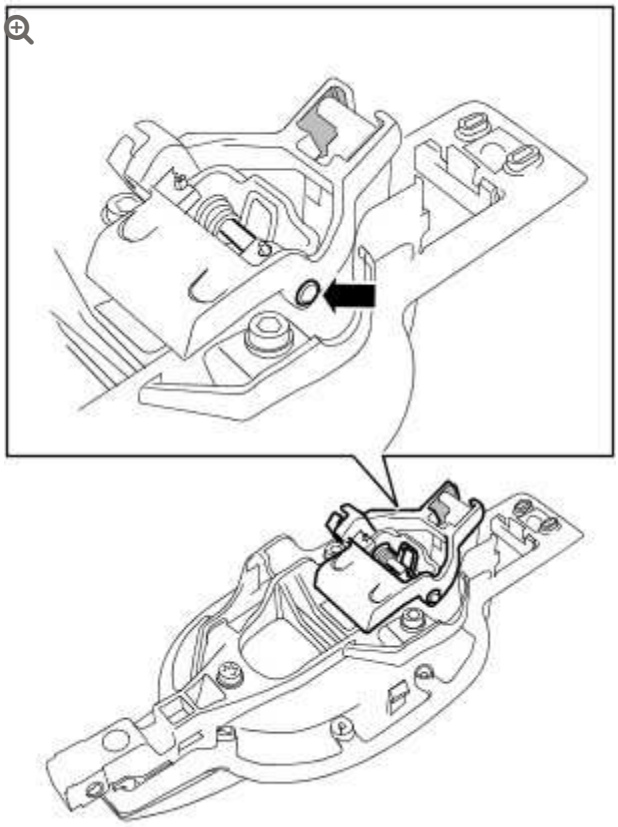

E91701

Remove the mass balance assembly.

- Remove the mass balance pivot pin.
- Discard the retaining clip.
- Remove the return spring.

3.

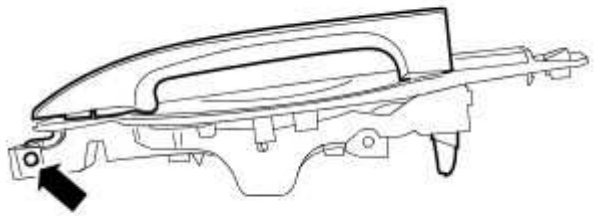

E91700

Remove the front door exterior handle.

- Remove the exterior door handle pivot pin.

INSTALLATION

1.

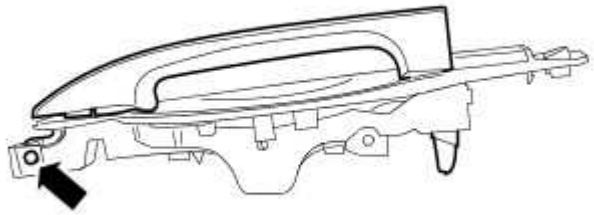

E91700

Install the front door exterior handle.

- Install the exterior door handle pivot pin.

2.

NOTE:

Make sure the return spring is installed to the correct position.

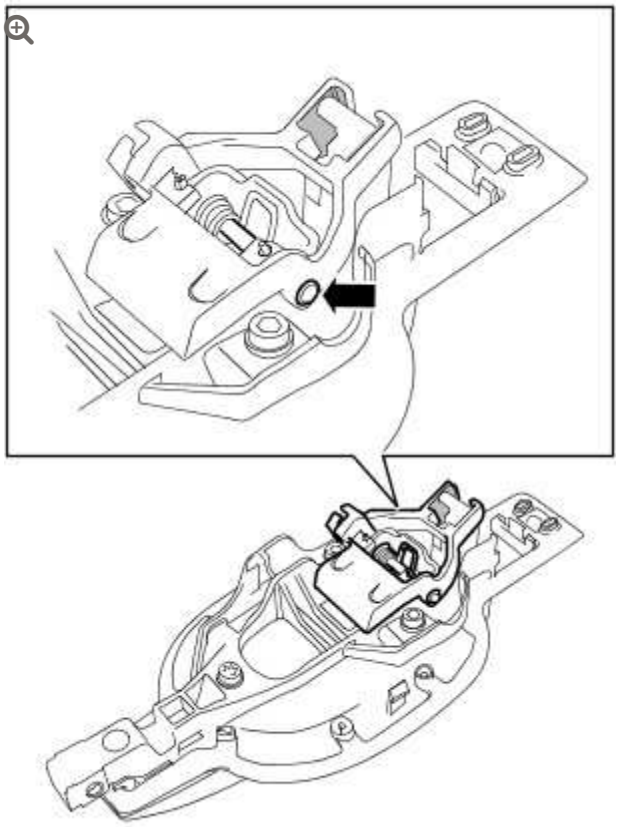

Install the mass balance assembly.

- Install the return spring.
- Install the mass balance pivot pin.

3.

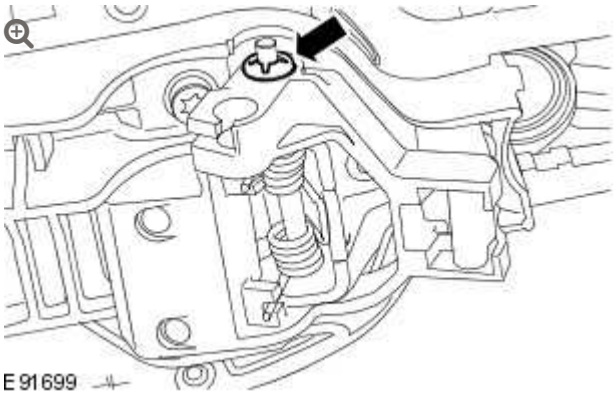

Install the mass balance pivot pin retaining clip.

4.

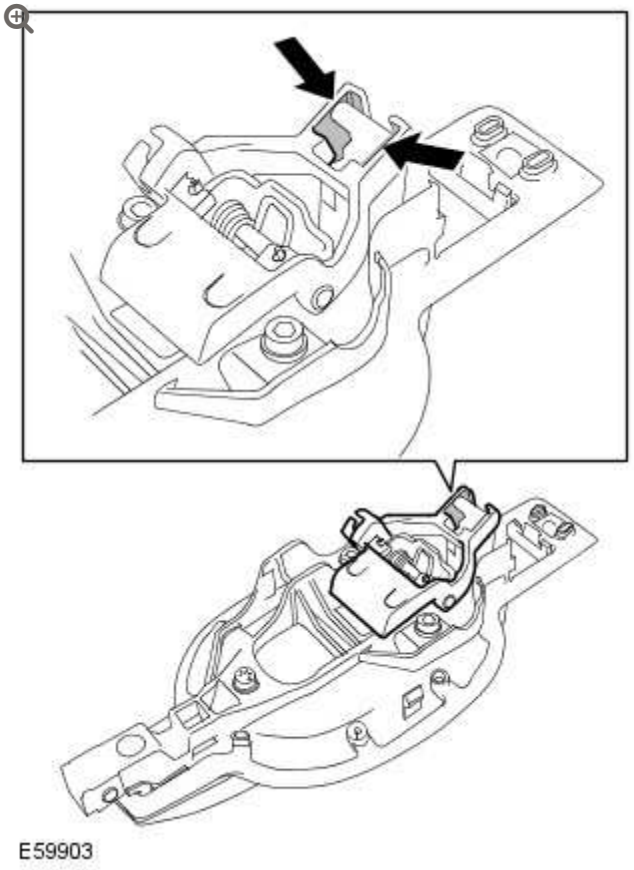

Lubricate the mass balance assembly contact area.

5. Install the front exterior door handle mechanism.
   For additional information, refer to: Exterior Door Handle Mechanism (501-14, Removal and Installation).

HANDLES, LOCKS, LATCHES AND ENTRY SYSTEMS

FRONT DOOR LATCH (G916825)

REMOVAL AND INSTALLATION

76.37.06	LATCH - FRONT DOOR - LEFT HAND - RENEW	ALL DERIVATIVES	0.7	USED WITHINS	+
76.37.12	LATCH - FRONT DOOR - RIGHT HAND - RENEW	ALL DERIVATIVES	0.7	USED WITHINS	+

REMOVAL

1. Raise the front door window glass.

2. Remove the side air bag module.
   For additional information, refer to: Side Air Bag Module (501-20, Removal and Installation).

3. Disconnect the door speaker electrical connector.

4. Remove the front door inner weathershield.

5. 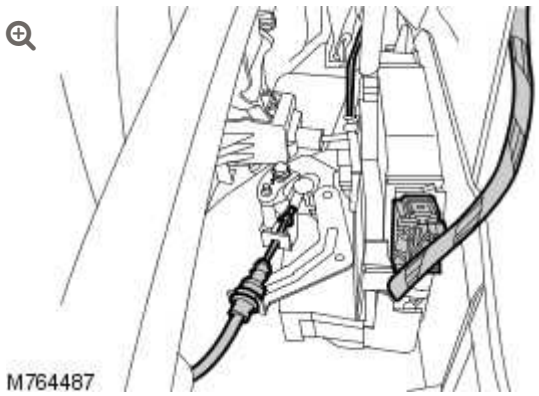

Remove the push button rod from the front door latch.

- Release the clip.
- Remove the rod.

6. Disconnect the front door latch electrical connector.

7. Disconnect the front door latch release cable.

8. 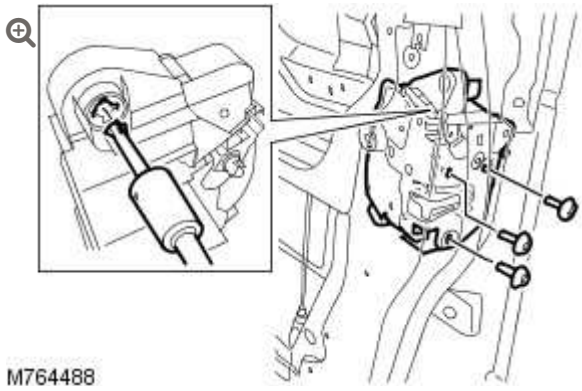

Release the front door latch assembly.

- Remove the 3 screws.

9. Release the door lock cylinder cable from the front door latch.

10. Remove the front door latch assembly.

11.

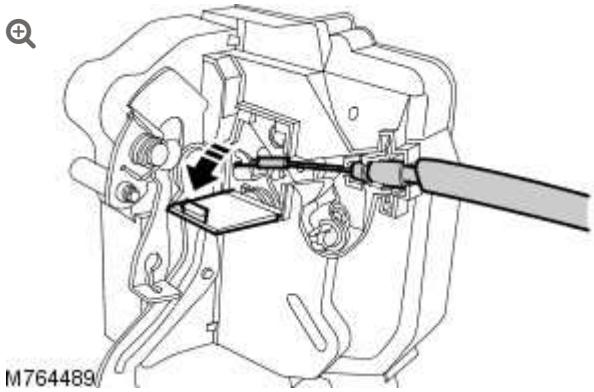

Remove the interior front door handle release cable.

- Release the access cover.
- Release the front door interior handle release cable.

INSTALLATION

1. Install the interior front door handle release cable.
   - Secure the front door interior handle release cable.
   - Secure the access cover.
2. Install the front door latch assembly.
   - Secure the door lock cylinder cable to the door latch.
   - Install the 3 screws and tighten to 10 Nm (7 lb.ft).
3. Connect the front door latch release cable.
4. Connect the front door latch electrical connector.
5. Install the push button rod to the front door latch.
6. Check the operation of the front door latch.
7. Install the front door inner weathershield.

8. Connect the door speaker electrical connector.

9. Install the side air bag module.
   For additional information, refer to: Side Air Bag Module (501-20, Removal and Installation).

10. Remove the front door latch adjustment screw access grommet.

11. **NOTE:**

    Rotate the front door latch adjusting screw anti-clockwise on LH doors and clockwise on RH doors.

    Release door latch adjustment by rotating the screw 2 complete turns.

12. Tighten the front door latch adjustment screw to 4 Nm (3 lb.ft).

13. Install the front door latch adjustment screw grommet.

2012.0 RANGE ROVER (LM), 501-14

HANDLES, LOCKS, LATCHES AND ENTRY SYSTEMS

DESCRIPTION AND OPERATION

COMPONENT LOCATION - SHEET 1 OF 2

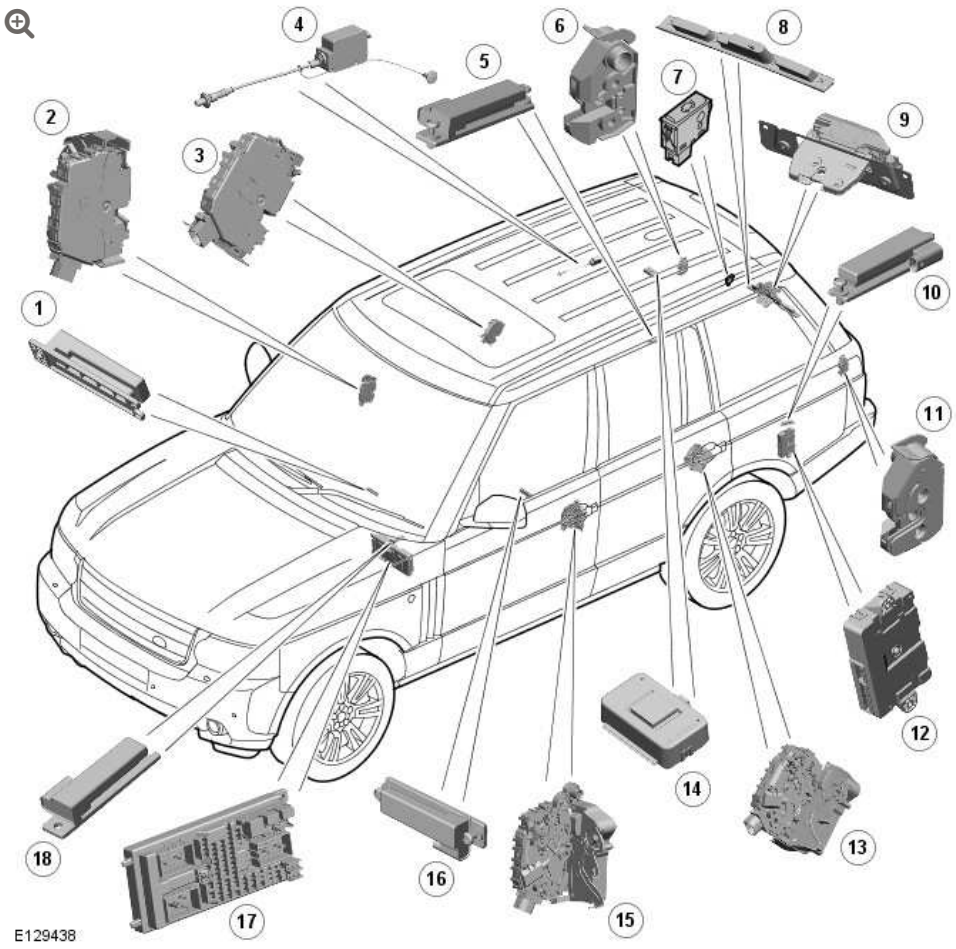

ITEM	DESCRIPTION

ITEM	DESCRIPTION
1	Passive start antenna - Front interior
2	Right Hand (RH) front door latch and motor
3	RH rear door latch and motor
4	Fuel flap release motor
5	Passive start antenna - Luggage compartment
6	RH lower tailgate latch and motor
7	Lower tailgate release button
8	Upper tailgate release button
9	Upper tailgate latch and motor
10	Passive start antenna - Luggage compartment
11	LH lower tailgate latch and motor
12	Keyless Vehicle Module (KVM)
13	LH rear door latch and motor
14	RF Receiver
15	LH front door latch and motor
16	Passive start antenna - Central interior
17	Central Junction Box (CJB)
18	Passive start antenna - Front interior

COMPONENT LOCATIONS - SHEET 2 OF 2

NOTE:

right-hand drive (RHD) installation shown, left-hand drive (LHD) installation similar

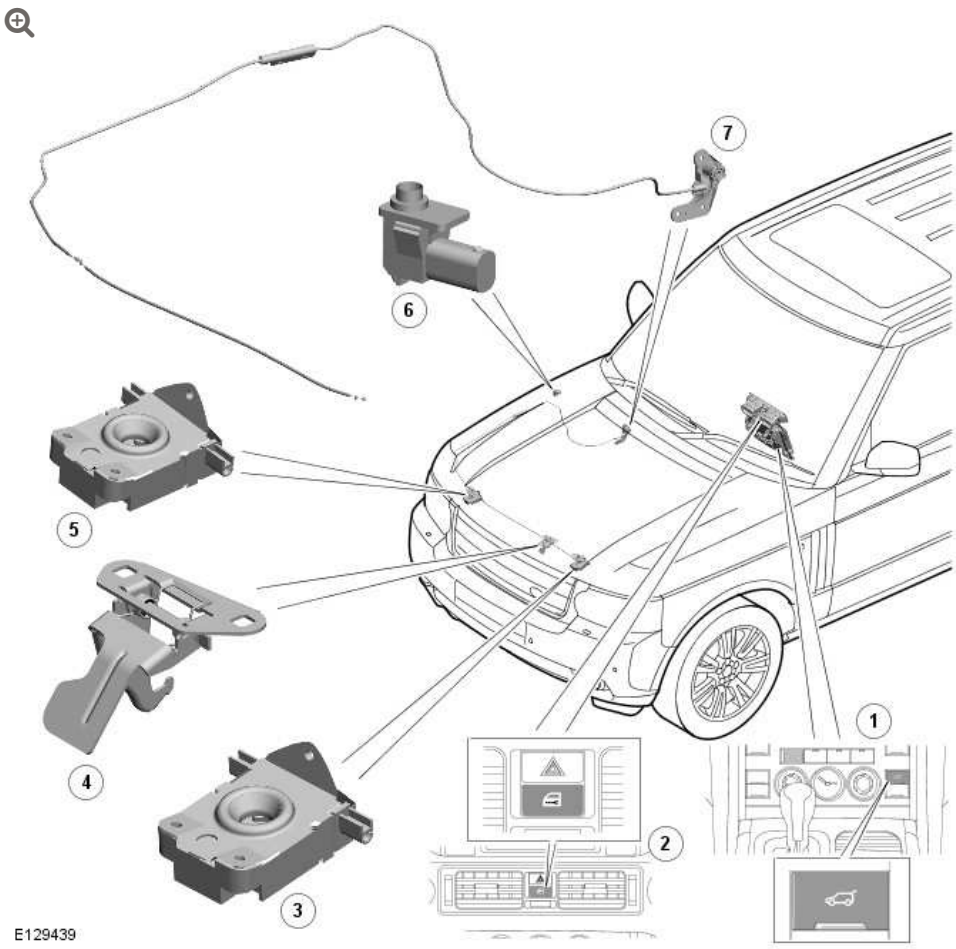

ITEM	DESCRIPTION
1	Upper tailgate internal release switch
2	Central Locking System (CLS) switch
3	LH hood latch
4	Hood safety catch
5	RH hood latch
6	Hood ajar switch
7	Hood release handle and cables

GENERAL

The hinged panels on the vehicle are secured with latches and mating strikers. A safety catch is installed on the hood to prevent it

from opening if the hood latches are open while the vehicle is moving.

The hood latches and the door latches are opened by pulling on the release handles. The tailgate latches are opened by pressing the release switches.

A remotely operated CLS controls the locking and unlocking of the door latches and the opening of the tailgate latches. In some markets, the CLS also locks and unlocks the fuel filler door. The CLS software is incorporated into the CJB (central junction box).

The driver exterior door handle incorporates a door lock. The door lock enables operation of the CLS with the ignition key if the smart key operation fails, and allows the driver's door to be mechanically unlocked if there is a vehicle power failure.

The rear door latches incorporate child locks to enable the interior door handles to be disengaged from the latch mechanisms.

HOOD LATCHES

The hood is secured by two latches, installed under the hood locking platform, which engage with strikers on the hood. The hood safety catch is installed to the left of the hood leading edge centerline, and engages with a recess in the hood locking platform.

The hood latches are opened by a release handle on the lower part of the driver's side A pillar. Two hood release cables connect the release handle in series with the two hood latches. The two hood release cables are joined together by a connector block located on the inner fender.

DOOR LATCHES

The side door latches are sealed units that incorporate separate actuators for locking and superlocking the doors. Each door latch also incorporates a Hall effect sensor that operates as an ajar switch to provide a door status signal for the CJB. The driver's door latch incorporates two additional Hall effect sensors to provide signals of lock and unlock selections made with the smart key emergency key blade in the door lock. Turning the top of the emergency key blade rearwards sends a lock signal and turning the top of the emergency key blade forwards sends an unlock signal.

The driver's and front passenger door latches communicate with the CJB via their respective door modules and the medium speed CAN (controller area network) bus. The rear door latches are connected to the front door modules via a LIN (local interconnect network) bus connection. On all doors the door ajar Hall sensors are connected directly to the CJB.

Each of the door latches is mechanically connected to a locking button in the top of the door trim panel. Pressing the locking button down when the door is closed disengages the exterior handle from the door latch to lock the door. Pulling on the interior handle extends the locking button from the door trim again and re-engages the exterior handle with the door latch, to unlock the door. A second pull on the interior door handle opens the door latch. On all except the driver's door, the doors can be slam locked after pressing the button down while the door is open. For lockout protection, the driver's door locking button cannot be pressed down when the driver door is open.

Door Latch

NOTE:

Front door latch shown

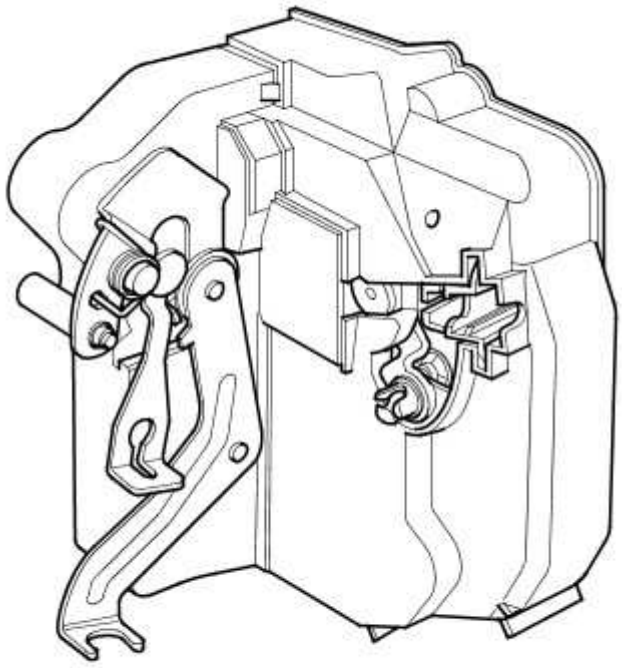

M865839

TAILGATE LATCHES

The upper tailgate latch incorporates a release actuator to open the upper tailgate and a microswitch that operates as an ajar switch to provide a tailgate status signal to the CJB. A black manual release wire is attached to the upper tailgate latch to allow the latch to be released in the event of actuator failure or loss of power. The end of the manual release wire is stowed in the inside trim at the bottom edge of the upper tailgate and is concealed by the trailing edge of the parcel shelf when the upper tailgate is closed.

Each lower tailgate latch is connected to a release actuator mounted inside the tailgate. A lever at the top of each latch housing allows the latches to be released in the event of actuator failure or loss of power. The levers are only accessible when the upper tailgate is open.

Upper Tailgate Latch

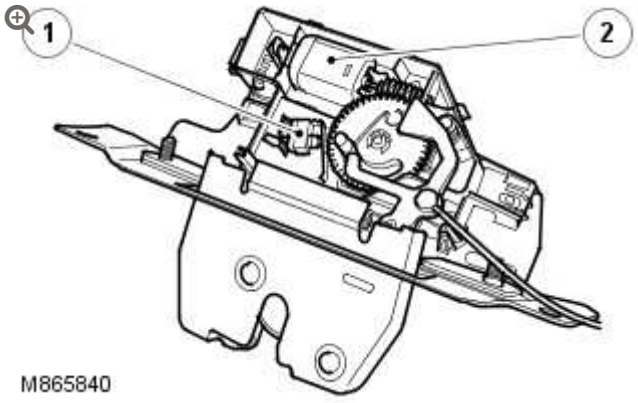

ITEM	DESCRIPTION
1	Ajar switch
2	Release actuator

HOOD AJAR SWITCH

The hood ajar switch is a plunger operated switch installed in the engine compartment, on the driver side of the secondary bulkhead. When the hood is closed, the hood presses the plunger into the switch housing and holds the switch open. When the hood opens, the spring loaded plunger extends, which allows the switch to close and connect a ground to the CJB. The switch can also be held open while the hood is open, by pulling the plunger up.

FUEL FILLER DOOR ACTUATOR

The fuel filler door actuator extends and retracts a wire reinforced plastic pin to lock and unlock the fuel filler door. A green manual release wire is attached to the pin to ensure the fuel filler door can be released in the event of actuator failure or loss of power. The end of the manual release wire is stowed in the soundproofing behind the trim panel covering the RJB (rear junction box).

CLS SWITCH

The CLS switch is a non latching push switch installed between the center face vents on the instrument panel, below the hazard warning switch. The CLS switch allows occupants to centrally lock the vehicle without arming the alarm. When the CLS switch is pressed, a battery voltage signal is connected to the CJB.

UPPER TAILGATE INTERNAL RELEASE SWITCH

The internal upper tailgate release switch is a non latching push switch installed on the center console. The switch, which is integral with the ATC (automatic temperature control) control module, allows the tailgate to be opened from inside the vehicle. When the switch is pressed a medium speed CANsignal is passed from the to the ATC control module to the CJB. The CJB only responds to the request when the CLS system is unlocked and the vehicle is stationary.

UPPER TAILGATE EXTERNAL RELEASE SWITCH

The external upper tailgate release switch is a microswitch installed in the license plate lamp housing in the bottom edge of the upper tailgate. The switch is operated by a lever connected to a rubber covered plate set into the outside surface of the license plate lamp housing. When the switch is activated it connects a ground to the CJB. The CJB only responds to the input when the CLS system is unlocked and the vehicle is stationary.

LOWER TAILGATE RELEASE SWITCH

The lower tailgate release switch is a non latching push switch installed under a rubber cover in the top edge of the lower tailgate.

When the switch is pressed, a battery voltage signal is connected to the CJB. The CJB only responds to the input when the upper tailgate is unlatched and the vehicle is stationary.

RF RECEIVER

The RF receiver converts RF signals from the smart key into digital messages and transmits them to the CJB. The RF receiver is installed in a central position on the roof, above the roof liner, to the rear of the sunroof.

Operation of the RF receiver is powered by a permanent battery feed from the CJB. RF signals from the smart key are received by the RF receiver and passed to the keyless vehicle module (KVM) on a dedicated data line.

SYSTEM OPERATION

The locking system allows the doors and fuel filler door to be centrally locked and unlocked using the CLS switch, the driver's door lock and the smart key. The system has two locking states: locked and superlocked. Locking the vehicle from inside using the CLS switch puts the system into the locked state. Locking the vehicle from the outside using the driver's door lock or the smart key puts the vehicle into the superlocked state.

When the vehicle is locked, the CJB:

- Energizes the lock actuators in the side door latches to disengage the external door handles from the latches.
- Energizes the fuel filler door actuator to extend the locking pin to secure the filler door (all except NAS).
- Ignores inputs from the upper tailgate external release switch.

The CJB will lock the vehicle regardless of the ignition status. The upper tailgate internal release switch remains enabled and individual side doors can be unlocked using the internal door handle. From the locked state, the vehicle can be centrally unlocked using the CLS switch, the smart key or the driver's door lock.

When the vehicle is superlocked, the CJB:

- Energizes the lock and the superlock actuators in the side door latches to disengage both the internal and the external door handles from the latches.
- Energizes the fuel filler door actuator to extend the locking pin to secure the filler door (all except NAS).
- Ignores inputs from both the external and the internal release switches of the upper tailgate.
- Ignores inputs from the CLS switch.

The CJB will only superlock the vehicle after the ignition is off and the driver's door has opened. From the superlocked state, the vehicle can be centrally unlocked using the smart key or the driver's door lock.

TAILGATE OPENING

When the vehicle is locked or superlocked, operating the tailgate release button on the smart key causes the CJB to actuate the upper tailgate release actuator while leaving the remainder of the system in the locked/superlocked condition.

Volumetric protection is disabled when the tailgate is opened.
For additional information, refer to: Anti-Theft - Active (419-01A, Description and Operation).

SINGLE POINT ENTRY (SPE)

With the vehicle superlocked and SPE is enabled, when the CJB receives a request from the smart key or the driver's door lock, it

unlocks the driver's door and changes the rest of the CLS from the superlocked to the locked state. When it receives a second unlock request, from the smart key, the driver's door lock or the CLS switch, the CJB unlocks the remainder of the system.

AUTOMATIC LOCKING

The CJB can be configured to automatically lock the system when the vehicle exceeds a set speed. The set speed is selectable between 4 and 28 km/h (2.5 and 17.5 mph), in 4 km/h (2.5 mph) increments.

To guard against accidental unlocking, the CJB can also be configured to automatically lock (not superlock) the system if no ajar switch or CLS switch is activated within 2 minutes of unlocking the vehicle with the remote handset.

AUTOMATIC UNLOCKING

If a crash that triggers any of the air bags occurs, the restraints control module (RCM) outputs a crash signal to the CJB. On receipt of the crash signal the CJB outputs unlock signals to all of the door latch actuators, via the door modules and, where fitted, the fuel filler door actuator, irrespective of their current locked state. Subsequent attempts to lock the doors are inhibited until the CJB has received an unlock request.

REPETITION BLOCKING

To protect the door latch actuators the CJB incorporates a repetition blocking feature. The CJB increments an internal counter by one each time an actuation occurs and decrements the counter by one every 8 seconds. If the counter exceeds 15, the CJB blocks further unlocking commands until the counter returns to 15 or less. The block is ignored if the CJB receives a crash signal or the system goes from superlocked to locked. In addition to the counter for the side doors, separate counters are maintained for each of the tailgates.

LOCKOUT PROTECTION

The vehicle cannot be locked when either of the front doors is open.
The vehicle cannot be superlocked when the driver door is open.

CONTROL DIAGRAM

NOTE:

A = Hardwired connection; **F** = RF transmission; **N** = Medium speed CAN bus; **O** = LIN bus; **AC** = Data line

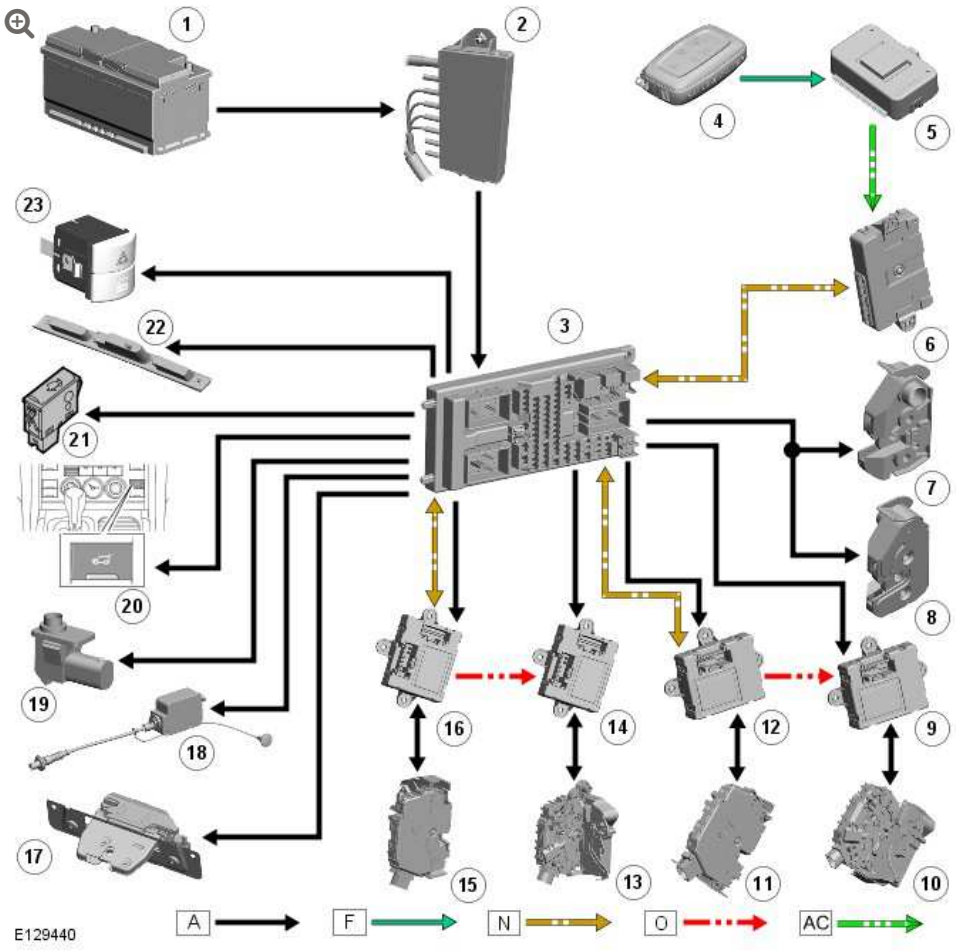

ITEM	DESCRIPTION
1	Battery
2	Battery Junction Box (BJB)
3	Central Junction Box (CJB)

ITEM	DESCRIPTION
4	Smart key
5	Radio Frequency (RF) receiver
6	Keyless Vehicle Module (KVM)
7	RH lower tailgate latch and motor
8	LH lower tailgate latch and motor
9	LH rear door module
10	LH rear door latch and motor
11	RH rear door latch and motor
12	RH rear door module
13	LH front door latch and motor
14	LH front door module
15	RH front door latch and motor
16	RH front door module
17	Upper tailgate latch and motor
18	Fuel flap release motor
19	Hood ajar switch
20	Upper tailgate internal release switch
21	Lower tailgate release button
22	Upper tailgate release button
23	Central Locking System (CLS) switch

HANDLES, LOCKS, LATCHES AND ENTRY SYSTEMS

IGNITION LOCK CYLINDER

(G899909)

REMOVAL AND INSTALLATION

REMOVAL

WARNINGS:

- Persons working on the supplemental restraint system (SRS) must be fully trained and have been issued with the safety guidelines.
- Allow a period of 10 minutes to elapse after disconnecting the battery before undertaking any work on the SRS.
- The SRS electrical connectors are unique. DO NOT force, or attempt to connect electrical connectors to the wrong sockets.
- The correct procedures must always be used when working on SRS components.
- It is imperative that before any work is undertaken on the SRS system, the appropriate information is read thoroughly.
- Always disconnect both battery cables before beginning work on the SRS system. Disconnect the ground cable first. Never reverse connect the battery.
- Take extra care when handling SRS components.

1. Turn the ignition key to position I.

2. Make the air bag supplemental restraint system (SRS) safe.
   For additional information, refer to: Standard Workshop Practices (100-00, Description and Operation).

3. Disconnect the battery ground cable.
   For additional information, refer to: Specifications (414-00, Specifications).

4.

Remove the lower center registers panel assembly.
For additional information, refer to: Lower Center Registers Panel Assembly (501-12, Removal and Installation).

5.

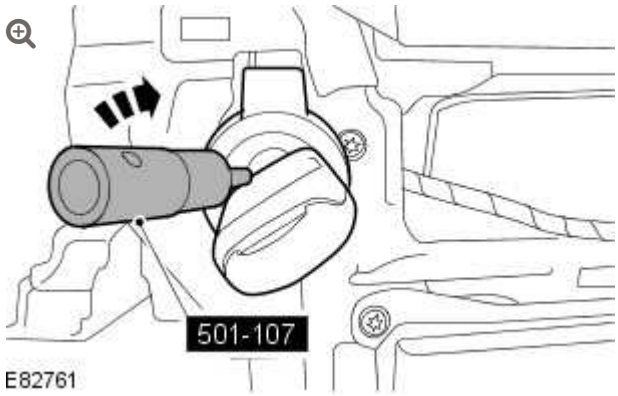

Insert the special tool into the ignition lock cylinder access hole and rotate the special tool clockwise to release the ignition lock cylinder from the ignition lock cylinder housing.

6. Disconnect the transponder coil electrical connector.

7. Remove the ignition lock cylinder.

8. Remove the ignition key.

9.



Remove the transponder coil.

INSTALLATION

1. Install the transponder coil.

2. Turn the ignition key to position I.

3. Connect the transponder coil electrical connector.

4. Install the special tool into the ignition lock cylinder access hole and rotate the special tool clockwise to install the ignition lock cylinder.

5. 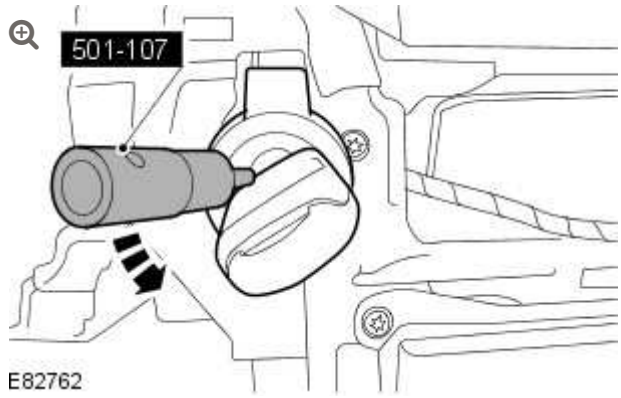

   Remove the special tool.

   - Rotate the special tool counter clockwise to secure the ignition lock cylinder to the ignition lock cylinder housing.

6. Remove the ignition key.

7. Install the lower center registers panel assembly.
   For additional information, refer to: Lower Center Registers Panel Assembly (501-12, Removal and Installation).

8.

Connect the battery ground cable.

For additional information, refer to: Specifications (414-00, Specifications).

HANDLES, LOCKS, LATCHES AND ENTRY SYSTEMS

LIFTGATE LATCH (G914094)

REMOVAL AND INSTALLATION

76.37.17	LATCH - TAILGATE - RENEW	ALL DERIVATIVES	0.5	USED WITHINS	+

REMOVAL

1. Remove the liftgate upper trim panel.
   For additional information, refer to: Liftgate Lower Trim Panel (501-05, Removal and Installation).

2. 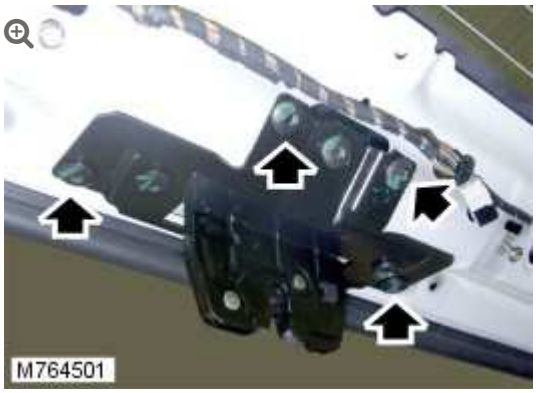

   Release the liftgate latch.

   - Remove the 4 screws.

3.

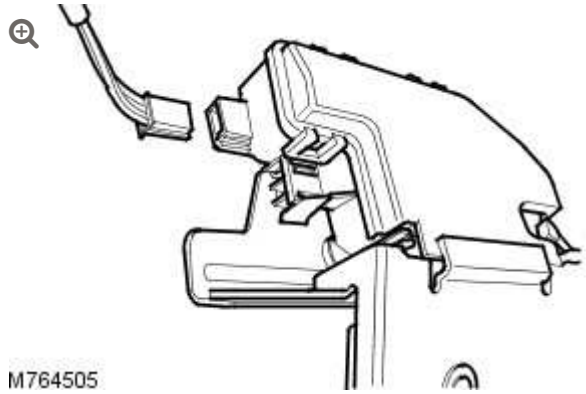

Remove the liftgate latch.

- Disconnect the electrical connector.

4. **NOTE:**

   Do not disassemble further if the component is removed for access only.

   Disconnect the manual release cable.

5. Remove the liftgate latch bracket.
   - Remove the 3 screws.

INSTALLATION

1. Install the liftgate latch bracket.
   - Tighten to 10 Nm (7 lb.ft).
2. Connect the manual release cable.
3. Install the liftgate latch.
   - Connect the electrical connector.
   - Tighten to 10 Nm (7 lb.ft).

4. Install the liftgate upper trim panel.
   For additional information, refer to: Liftgate Lower Trim Panel (501-05, Removal and Installation).

5. Adjust the liftgate striker.

LIFTGATE STRIKER ADJUSTMENT (G928366)

GENERAL PROCEDURES

1. Check for an equal gap and alignment to the adjacent panels. If incorrect, follow the adjust procedure below.

2. Remove the tailgate upper trim panel.
   - Remove the 6 screw covers.
   - Remove the 6 screws.

3. 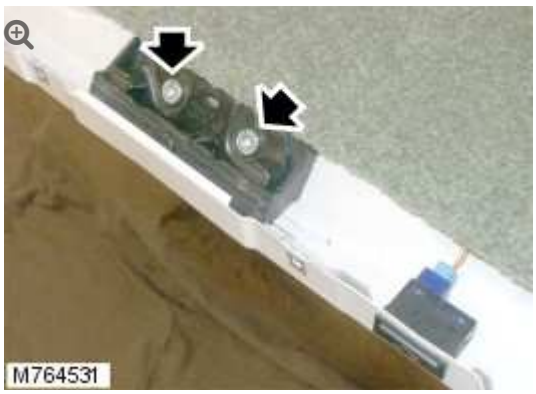

   Loosen the 2 screws securing the liftgate striker.

4. Close the liftgate and check for an equal gap and alignment to the adjacent panels.

5. Open the liftgate.
    - Tighten the screws to 10 Nm (7 lb.ft).

6. Install the tailgate upper trim panel.
    - Install the screws.
    - Install the screw covers.

HANDLES, LOCKS, LATCHES AND ENTRY SYSTEMS

DIAGNOSIS AND TESTING

PRINCIPLE OF OPERATION

For a detailed description of the locks, latches and entry systems and operation, refer to the relevant Description and Operation section of the workshop manual. REFER to: Handles, Locks, Latches and Entry Systems (501-14 Handles, Locks, Latches and Entry Systems, Description and Operation).

INSPECTION AND VERIFICATION

CAUTION:

Diagnosis by substitution from a donor vehicle is **NOT** acceptable. Substitution of control modules does not guarantee confirmation of a fault and may also cause additional faults in the vehicle being checked and/or the donor vehicle.

NOTE:

Check and rectify basic faults before beginning diagnostic routines involving pinpoint tests.

1. Verify the customer concern.
2. Visually inspect for obvious signs of mechanical or electrical damage.

Visual Inspection

MECHANICAL	ELECTRICAL
▪ Misaligned door(s), hood or tailgate ▪ Fuel filler door lock actuator ▪ Hood release handle ▪ Hood release cables ▪ Hood latch(es) ▪ Exterior door handle(s) ▪ Interior door handle(s) ▪ Cable(s) ▪ Tailgate release switch ▪ Rear window release switch	▪ Fuses ▪ Wiring harness ▪ Wiring connector(s) ▪ Door lock actuator(s) ▪ Remote transmitter ▪ Central locking switches ▪ Controller Area Network (CAN) circuits ▪ Radio frequency (RF) receiver ▪ Central Junction Box (CJB) ▪ Loose or corroded connections

3. If an obvious cause for an observed or reported concern is found, correct the cause (if possible) before proceeding to the next step.
4. If the cause is not visually evident, verify the symptom and refer to the Symptom Chart, alternatively check for Diagnostic Trouble Codes (DTCs) and refer to the DTC Index.

SYMPTOM CHART

SYMPTOM	POSSIBLE CAUSES	ACTION
The message center indicates that the hood, the tailgate or a door is open when it appears to be closed	▪ Incorrect striker alignment/adjustment ▪ Ajar switch circuit short circuit to ground ▪ Ajar switch failure	Check/adjust the strikers as necessary. Check for DTCs indicating an ajar switch fault. Refer to the DTC index.
Vehicle indicates a mislock when the hood, tailgate and doors appear to be closed		
Fuel flap does not lock/unlock	▪ Fuel flap cable detached from body ▪ Fuel flap actuator detached from mounting bracket ▪ Fuel flap actuator disconnected ▪ Fuel flap actuator failure	Check the condition and installation of the fuel flap cable. Check the security of the fuel flap actuator and bracket. Check the security of the actuator electrical connector. Check for DTCs indicating a fuel flap actuator fault. Refer to the DTC index.
Single door will not open from the outside (but opens from the inside)	▪ Door latch ▪ Cable fault ▪ Door handle	GO to Pinpoint Test **A.**
Single door will not open from the inside (but opens from the outside)	▪ Door latch ▪ Cable fault ▪ Door handle ▪ Child lock	GO to Pinpoint Test **B.**
Single door will not lock	▪ Door latch ▪ Cable fault ▪ Door handle	GO to Pinpoint Test **C.**

SYMPTOM	POSSIBLE CAUSES	ACTION
	▪ Door lock switch ▪ Wiring harness	
Door ajar warning message illuminated on instrument cluster	▪ Door latch ▪ Wiring harness ▪ Instrument cluster	GO to Pinpoint Test **D.**

DTC INDEX

For a list of Diagnostic Trouble Codes (DTCs) that could be logged on this vehicle, please refer to Section 100-00. REFER to: (100-00 General Information)

Diagnostic Trouble Code (DTC) Index - DTC: Module Name: Central Junction Box (Description and Operation),
Diagnostic Trouble Code (DTC) Index - DTC: Module Name: Driver/Passenger Door Module (Description and Operation),
Diagnostic Trouble Code (DTC) Index - DTC: Module Name: Remote Function Actuator (Description and Operation),
Diagnostic Trouble Code (DTC) Index - DTC: Module Name: Steering Column Lock Module (Description and Operation).

PINPOINT TEST

PINPOINT TEST A : SINGLE DOOR WILL NOT OPEN FROM THE OUTSIDE (BUT OPENS FROM THE INSIDE)	
TEST CONDITIONS	DETAILS/RESULTS/ACTIONS
A1: CHECK THE EXTERIOR DOOR RELEASE CABLE TO EXTERIOR DOOR HANDLE IS INSTALLED CORRECTLY	
	1 Remove the door trim panel as necessary. REFER to: Front Door Trim Panel (501-05, Removal and

PINPOINT TEST A : SINGLE DOOR WILL NOT OPEN FROM THE OUTSIDE (BUT OPENS FROM THE INSIDE)	
	Installation) / Rear Door Trim Panel (501-05, Removal and Installation).
	2 Check the exterior door release cable is correctly installed to the exterior door handle.
	Is the cable correctly installed? **Yes** GO to A2. **No** Connect the door release cable correctly. If the cable is damaged, install a new door release cable. Test the system for normal operation.
A2: CHECK THE EXTERIOR DOOR HANDLE RELEASE CONNECTION TO THE DOOR LATCH	
	1 Is the exterior door handle release connection to the door latch installed correctly.
	Is the exterior door handle release cable installed correctly? **Yes** GO to A3. **No** Connect the door release cable correctly. If the cable is damaged, install a new door release cable. Test the system for normal operation.
A3: CHECK THE DOOR LATCH FOR CORRECT OPERATION USING THE EXTERIOR DOOR HANDLE	
	1 With the door open, use a suitable screwdriver to latch the door latch and pull the exterior door handle to confirm door latch release.
	Does the door latch release? **Yes** GO to A4. **No** Install a new door latch as necessary.
A4: CHECK FULL OPERATION OF THE DOOR AFTER HARD CLOSING	
	1 Make sure that the door opens, closes, locks and unlocks as per normal operation after a hard door closing. Repeat this process 5 times.
	Does the door operate correctly? **Yes** Test the system for normal operation. **No**

PINPOINT TEST A : SINGLE DOOR WILL NOT OPEN FROM THE OUTSIDE (BUT OPENS FROM THE INSIDE)	
	Install a new door latch as necessary.

PINPOINT TEST B : SINGLE DOOR WILL NOT OPEN FROM THE INSIDE (BUT OPENS FROM THE OUTSIDE)	
TEST CONDITIONS	DETAILS/RESULTS/ACTIONS
B1: CHECK THE INTERIOR DOOR RELEASE CABLE TO INTERIOR DOOR HANDLE IS INSTALLED CORRECTLY	
	1 Make sure the child lock is disengaged as necessary.
	2 Remove the door trim panel as necessary. REFER to: Front Door Trim Panel (501-05, Removal and Installation) / Rear Door Trim Panel (501-05, Removal and Installation).
	3 Check the interior door release cable is correctly installed to the interior door handle.
	Is the cable correctly installed? **Yes** GO to B2. **No** Connect the door release cable correctly. If the cable is damaged, install a new door release cable. Test the system for normal operation.
B2: CHECK THE INTERIOR DOOR HANDLE RELEASE CONNECTION TO THE DOOR LATCH	
	1 Is the interior door handle release connection to the door latch installed correctly?
	Is the interior door handle release cable installed correctly? **Yes** GO to B3. **No** Connect the door release cable correctly. If the cable is damaged, install a new door release cable. Test the system for normal operation.
B3: CHECK THE DOOR LATCH CABLE PLASTIC RETAINING CLIP/HOUSING FOR DAMAGE	
	1 Check the door latch cable plastic retaining clip/housing for damage.

PINPOINT TEST B : SINGLE DOOR WILL NOT OPEN FROM THE INSIDE (BUT OPENS FROM THE OUTSIDE)	
	Is the door latch cable plastic retaining clip/housing for damaged? **Yes** Install a new door latch as necessary. **No** GO to B4.
B4: CHECK THE DOOR LATCH FOR CORRECT OPERATION USING THE INTERIOR DOOR HANDLE	
	1 With the door open, use a suitable screwdriver to latch the door latch and pull the interior door handle to confirm door latch release.
	Does the door latch release? **Yes** GO to B5. **No** Install a new door latch as necessary.
B5: CHECK FULL OPERATION OF THE DOOR AFTER HARD CLOSING	
	1 Make sure that the door opens, closes, locks and unlocks as per normal operation after a hard door closing. Repeat this process 5 times.
	Does the door operate correctly? **Yes** Test the system for normal operation. **No** Install a new door latch as necessary.

PINPOINT TEST C : SINGLE DOOR WILL NOT LOCK	
TEST CONDITIONS	DETAILS/RESULTS/ACTIONS
C1: CHECK THE LOCKING BUTTON OPERATION	
	1 Check if the door latch locks/unlocks by activating the locking button.
	Does the door lock and unlock? **Yes** GO to C2. **No** GO to C5.
C2: CHECK THE DOOR LATCH ELECTRICAL CONNECTOR IS CORRECTLY INSTALLED	

PINPOINT TEST C : SINGLE DOOR WILL NOT LOCK	
	1 Make sure that the door latch electrical connector is installed correctly.
	Is the electrical connector installed correctly? **Yes** GO to C3. **No** Install the door latch electrical connector. Test the system for normal operation.
C3: CHECK THE DOOR LATCH ELECTRICAL CONNECTOR TERMINALS FOR DAMAGE	
	1 Disconnect the door latch electrical connector.
	2 Check the door latch electrical connector and door latch terminals for damage or corrosion.
	Are the terminals damaged or corroded? **Yes** Repair the electrical connector as necessary. Test the system for normal operation. If the terminals on the door latch are damaged, install a new door latch as necessary. **No** GO to C4.
C4: CHECK THE VOLTAGE TO THE DOOR LATCH	
	1 Check for voltage at the door latch electrical connector.
	Is the voltage greater than 10 volts? **Yes** Install a new door latch as necessary. **No** Repair the wiring harness. Test the system for normal operation. If the concern continues, install a new door latch as necessary.
C5: CHECK THE INTERIOR DOOR HANDLE RELEASE CONNECTION TO THE DOOR LATCH	
	1 Is the interior door handle release cable to the door latch installed correctly?
	Is the interior door handle release cable installed correctly? **Yes** GO to C6. **No** Connect the door release cable correctly. If the cable is damaged, install a new door release cable. Test the system for normal operation.

PINPOINT TEST C : SINGLE DOOR WILL NOT LOCK	
C6: CHECK THE DOOR LATCH CABLE PLASTIC RETAINING CLIP/HOUSING FOR DAMAGE	
	1 Check the door latch cable plastic retaining clip/housing for damage.
	Is the door latch cable plastic retaining clip/housing for damaged? **Yes** Install a new door latch as necessary. **No** GO to C7.
C7: CHECK THE DOOR LATCH FOR CORRECT OPERATION USING THE INTERIOR DOOR HANDLE	
	1 With the door open, use a suitable screwdriver to latch the door latch and activate the locking button to confirm the door latch has locked.
	Does the door latch lock? **Yes** GO to C8. **No** Install a new door latch as necessary.
C8: CHECK FULL OPERATION OF THE DOOR AFTER HARD CLOSING	
	1 Make sure that the door opens, closes, locks and unlocks as per normal operation after a hard door closing. Repeat this process 5 times.
	Does the door operate correctly? **Yes** Test the system for normal operation. **No** Install a new door latch as necessary.

PINPOINT TEST D : DOOR AJAR WARNING MESSAGE ILLUMINATED ON INSTRUMENT CLUSTER	
TEST CONDITIONS	DETAILS/RESULTS/ACTIONS
D1: CHECK THE DOOR LATCH ELECTRICAL CONNECTOR IS CORRECTLY INSTALLED	
	1 Make sure that the door latch electrical connector is installed correctly.
	Is the electrical connector installed correctly?

PINPOINT TEST D : DOOR AJAR WARNING MESSAGE ILLUMINATED ON INSTRUMENT CLUSTER	
	Yes GO to D2. **No** Install the door latch electrical connector. Test the system for normal operation.
D2: CHECK THE DOOR LATCH ELECTRICAL CONNECTOR TERMINALS FOR DAMAGE	
	1 Disconnect the door latch electrical connector.
	2 Check the door latch electrical connector and door latch terminals for damage or corrosion.
	Are the terminals damaged or corroded? **Yes** Repair the electrical connector as necessary. Test the system for normal operation. If the terminals on the door latch are damaged, install a new door latch as necessary. **No** GO to D3.
D3: CHECK FULL OPERATION OF THE DOOR AFTER HARD CLOSING	
	1 Connect the door latch electrical connector.
	2 Make sure that the door opens, closes, locks and unlocks as per normal operation after a hard door closing. Repeat this process 5 times.
	Does the door operate correctly? **Yes** Test the system for normal operation. **No** Install a new door latch as necessary.

HANDLES, LOCKS, LATCHES AND ENTRY SYSTEMS

TAILGATE LATCH (G914095)

REMOVAL AND INSTALLATION

76.37.83	LATCH - OUTER - TAILGATE - EACH - RENEW	ALL DERIVATIVES	0.1	USED WITHINS	+

REMOVAL

1. Open the liftgate and tailgate.

2. 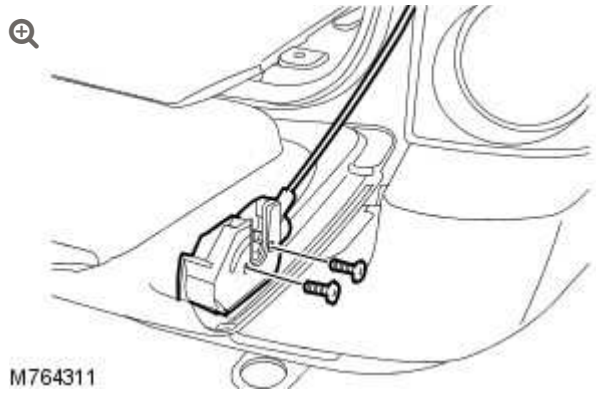

   Remove the tailgate latch assembly.

   - Remove the 2 screws.

INSTALLATION

1. Install the tailgate latch assembly.
    - Tighten to 25 Nm (18 lb.ft).

HANDLES, LOCKS, LATCHES AND ENTRY SYSTEMS

TAILGATE LATCH ACTUATOR (G935634)

REMOVAL AND INSTALLATION

86.26.02	SOLENOID/MOTOR - LUGGAGE COMPARTMENT LID/TAILGATE/TAILDOOR - RENEW	ALL DERIVATIVES	0.2	USED WITHINS	+

REMOVAL

1.

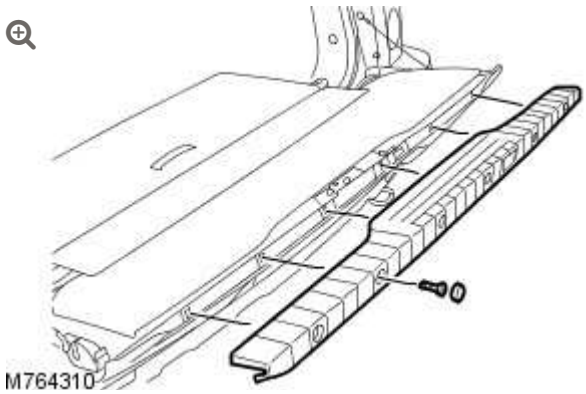

Remove the tailgate upper trim panel.

- Remove the 6 screw covers.
- Remove the 6 screws.

2. Remove the tailgate latch assembly.
   For additional information, refer to: Tailgate Latch (501-14, Removal and Installation).

3. 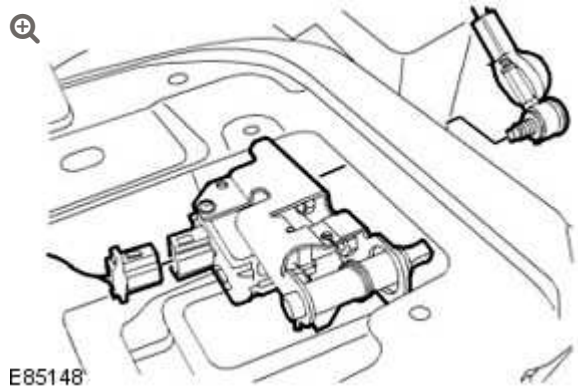

   Remove the tailgate latch actuator.
   - Release the access cover.
   - Disconnect the electrical connector.
   - Remove the bolt.

INSTALLATION

1. Install the tailgate latch actuator.
   - Tighten the bolt to 25 Nm (18 lb.ft).
   - Connect the electrical connector.
   - Secure the access cover.

2. Install the tailgate latch assembly.
   For additional information, refer to: Tailgate Latch (501-14, Removal and Installation).

3. Install the tailgate upper trim panel.
   - Install the screws.

- Install the screw covers.

TAILGATE RELEASE SWITCH (G935650)

REMOVAL AND INSTALLATION

86.26.26	SWITCH - LUGGAGE COMPARTMENT LID/TAILGATE RELEASE - RENEW	ALL DERIVATIVES	0.2	USED WITHINS	+

REMOVAL

1.

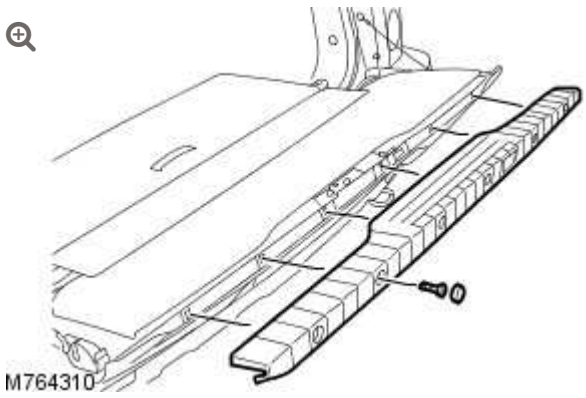

Remove the tailgate upper trim panel.

- Remove the 6 screw covers.
- Remove the 6 screws.

2.

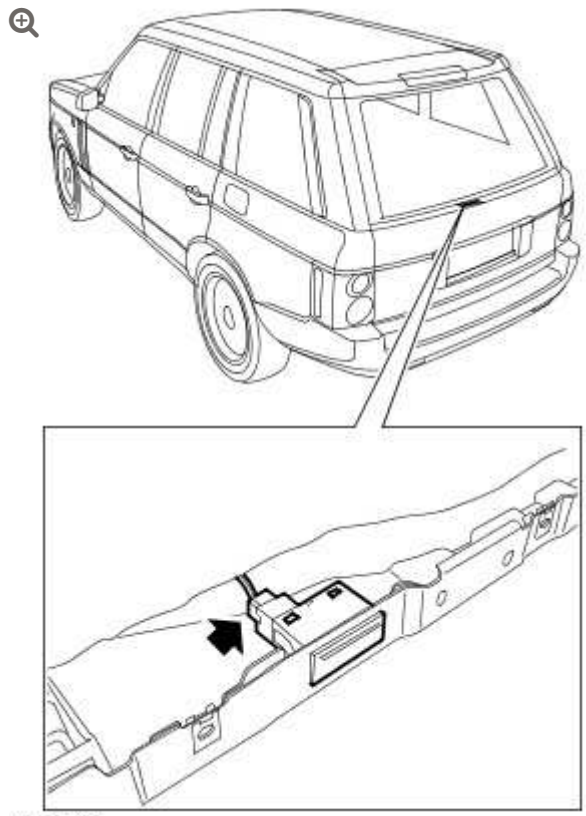

M865642

Remove the tailgate release switch.

- Disconnect the electrical connector.
- Release the clip.

INSTALLATION

1. Install the tailgate release switch.
   - Connect the electrical connector.
2. Install the tailgate upper trim panel.
   - Install the screws.
   - Install the screw covers.

HANDLES, LOCKS, LATCHES AND ENTRY SYSTEMS

TAILGATE STRIKER ADJUSTMENT (G916895)

GENERAL PROCEDURES

76.28.03	TAILGATE - STRIKER EACH - CHECK AND ADJUST	ALL DERIVATIVES	0.1		USED WITHINS

1. Check for an equal gap and alignment to the adjacent panels. If incorrect, follow the adjust procedure below.

2. 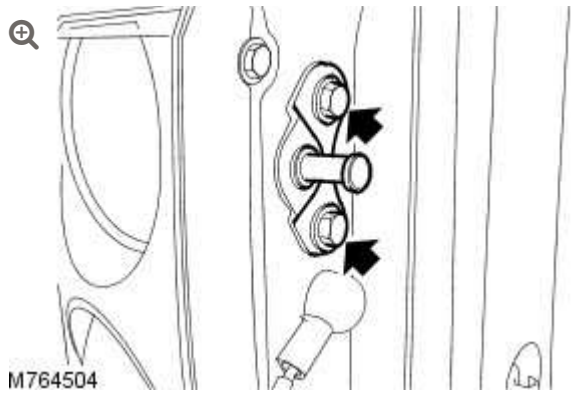

   Loosen the 2 tailgate striker bolts.

3. Close the tailgate and check for an equal gap and alignment to the adjacent panels.

4. Secure the tailgate striker.
    - Tighten the screws to 25 Nm (18 lb.ft).

WIPERS AND WASHERS

SPECIFICATIONS

Torque Specifications

DESCRIPTION	NM	LB-FT
Front wiper arms to linkage nut	34	25
Wiper linkage to front wiper motor:		
Nut	25	18
Bolts	10	7
Rear window wiper motor bolts	10	7
Rear wiper arm to motor nut	13	10
Washer reservoir to body bolts	3	2.2

WIPERS AND WASHERS

RAIN SENSOR (G914096)

REMOVAL AND INSTALLATION

84.12.11	SENSOR - RAIN - RENEW	ALL DERIVATIVES	0.1	USED WITHINS	+

REMOVAL

NOTE:

Make sure the ignition is OFF at all times during the replacement procedure.

1. Remove the interior rear view mirror.
   For additional information, refer to: Interior Rear View Mirror (501-09 Rear View Mirrors, Removal and Installation).

2.

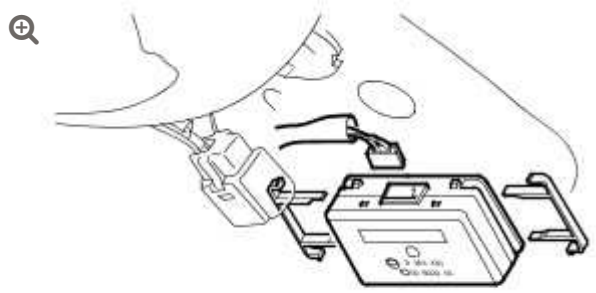

M840431

Remove the rain sensor.

- Release the 2 clips.

INSTALLATION

1.

NOTES:

- Make sure the rain/light sensor windshield area is clear and clean of any contamination inside and out.
- Prior to switch the ignition ON first time after the rain/light sensor replacement please allow at least 10 minutes for the gel pad to adhere to the windshield surface.

Install the rain sensor.

- Secure with the clips.

2.

NOTE:

If the original rain/light sensor is to be reinstalled, configure and calibrate using Land Rover approved diagnostic equipment.

Install the interior rear view mirror.

For additional information, refer to: Interior Rear View Mirror (501-09 Rear View Mirrors, Removal and Installation).

WIPERS AND WASHERS

REAR WINDOW WIPER MOTOR (G913589)

REMOVAL AND INSTALLATION

84.35.12	MOTOR - WIPER - RENEW	ALL DERIVATIVES	0.4	USED WITHINS	+

REMOVAL

1. Remove the rear window wiper pivot arm.
   For additional information, refer to: Rear Window Wiper Pivot Arm (501-16, Removal and Installation).

2. 

   Disconnect the rear window washer hose from the rear window wiper motor.

3. Disconnect the 2 electrical connectors from the rear window wiper motor.

4. Remove the 3 bolts securing the rear window wiper motor to the liftgate.

5. Remove the rear window wiper motor from the liftgate window glass seal.

6. **NOTE:**

   Do not disassemble further if the component is removed for access only.

   Remove the rear window wiper motor seal from the liftgate window glass.

7. Remove the 3 compression limiters from the rear window wiper motor mountings.
   - Release and collect the 3 mountings from the rear window wiper motor.

INSTALLATION

1. Install the mountings and insert the compression limiters to the rear window wiper motor.

2. Install a new rear window wiper motor to the liftgate window glass seal.

3. Install the rear window wiper motor.
   - Tighten the bolts to 10 Nm (7 lb.ft).

4. Connect the electrical connectors to the rear window wiper motor.

5. Connect the rear window washer hose to the rear window wiper motor.

6. Install the rear window wiper pivot arm.
   For additional information, refer to: Rear Window Wiper Pivot Arm (501-16, Removal and Installation).

WIPERS AND WASHERS

REAR WINDOW WIPER PIVOT ARM (G913590)

REMOVAL AND INSTALLATION

84.15.02	ARM - WIPER - EACH - RENEW	ALL DERIVATIVES	0.1	USED WITHINS	+
84.35.01	ARM - WIPER - RENEW	ALL DERIVATIVES	0.2	USED WITHINS	+

REMOVAL

1. Remove the liftgate upper trim panel.
   For additional information, refer to: Liftgate Upper Trim Panel (501-05, Removal and Installation).

2.

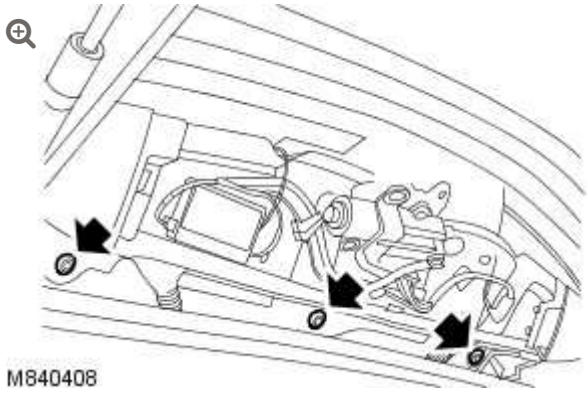

Remove the 3 bolts from the rear spoiler.

3. Close the liftgate.
   - Reposition the rear spoiler for access.

4. 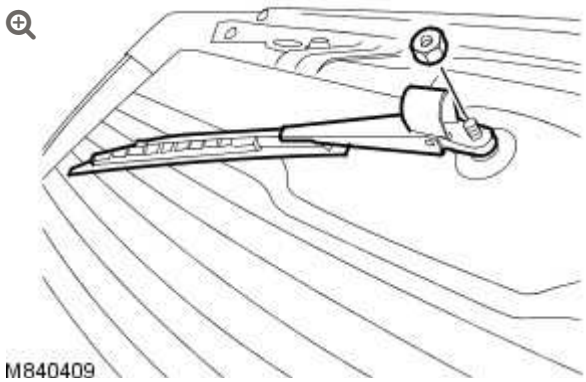

Remove the rear window wiper pivot arm.

- Raise the nut cover on the rear window wiper pivot arm and remove the nut.

INSTALLATION

1. Install the rear window wiper pivot arm.
   - Align the rear window wiper pivot arm to the liftgate window glass.
   - Tighten the nut to 13 Nm (10 lb.ft).

- Close the rear window wiper pivot arm nut cover.

2. Open the liftgate.
   - Reposition the rear spoiler to the liftgate.

3. Install the bolts to the rear spoiler.
   - Tighten the bolts to 10 Nm (7 lb.ft).

4. Install the liftgate upper trim panel.
   For additional information, refer to: Liftgate Upper Trim Panel (501-05, Removal and Installation).

WIPERS AND WASHERS

REAR WINDOW WIPER PIVOT ARM (G913590)

REMOVAL AND INSTALLATION

84.15.02	ARM - WIPER - EACH - RENEW	ALL DERIVATIVES	0.1	USED WITHINS	+
84.35.01	ARM - WIPER - RENEW	ALL DERIVATIVES	0.2	USED WITHINS	+

REMOVAL

1. Remove the liftgate upper trim panel.
   For additional information, refer to: Liftgate Upper Trim Panel (501-05, Removal and Installation).

2.

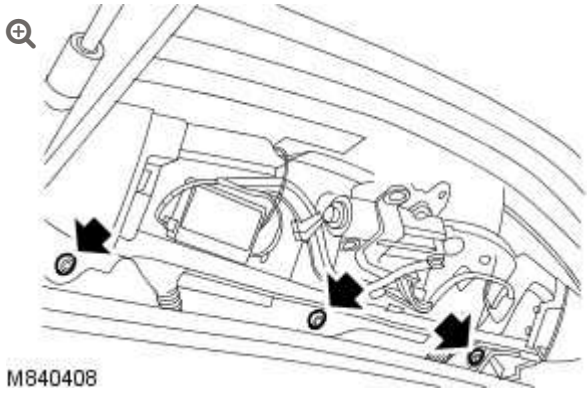

Remove the 3 bolts from the rear spoiler.

3. Close the liftgate.
   - Reposition the rear spoiler for access.

4. 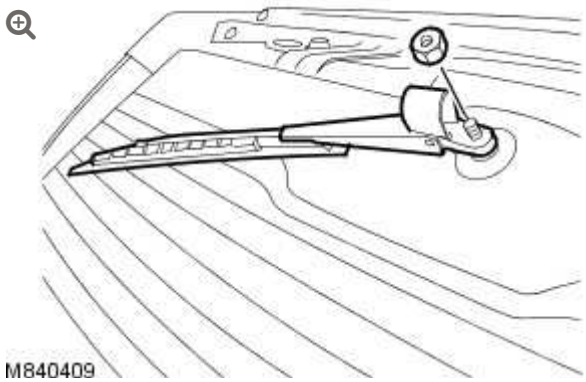

Remove the rear window wiper pivot arm.

- Raise the nut cover on the rear window wiper pivot arm and remove the nut.

INSTALLATION

1. Install the rear window wiper pivot arm.
   - Align the rear window wiper pivot arm to the liftgate window glass.
   - Tighten the nut to 13 Nm (10 lb.ft).

- Close the rear window wiper pivot arm nut cover.

2. Open the liftgate.
   - Reposition the rear spoiler to the liftgate.

3. Install the bolts to the rear spoiler.
   - Tighten the bolts to 10 Nm (7 lb.ft).

4. Install the liftgate upper trim panel.
   For additional information, refer to: Liftgate Upper Trim Panel (501-05, Removal and Installation).

WINDSHIELD WIPER INTERMITTENT WIPE RELAY (G927762)

REMOVAL AND INSTALLATION

REMOVAL

1. Remove the battery.

2. 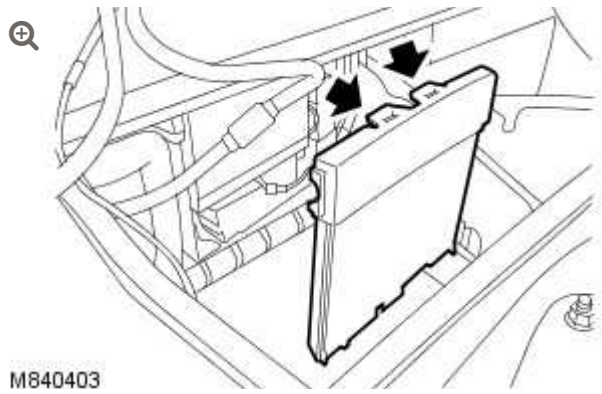

   Remove the bulkhead access cover.

   - Release the 2 clips.

3.



Disconnect the windshield wiper intermittent wipe relay.

INSTALLATION

1. Install the windshield wiper intermittent wipe relay.
2. Install the bulkhead access cover.
   - Secure the clips.
3. Install the battery.

WIPERS AND WASHERS

WINDSHIELD WIPER PIVOT ARM (G913865)

REMOVAL AND INSTALLATION

84.15.02	ARM - WIPER - EACH - RENEW	ALL DERIVATIVES	0.1	USED WITHINS +

SPECIAL TOOL(S)



(LRT-84-001)

Aligner windshield wiper 100-055

REMOVAL

1. 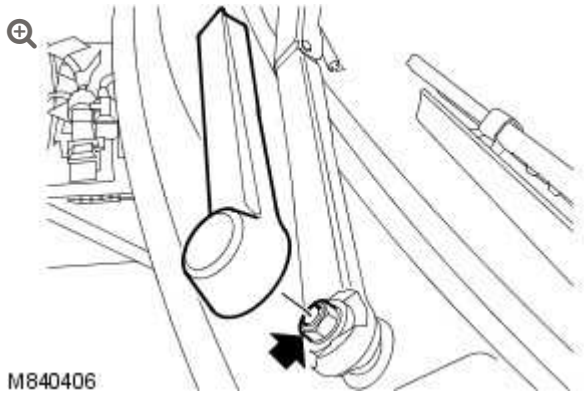

   Remove the nut cover from the windshield wiper pivot arm and remove the nut.

2. Remove the windshield wiper pivot arm from the pivot shaft.

3. **NOTE:**

   Do not disassemble further if the component is removed for access only.

   Release the windshield wiper pivot arm to windshield wiper blade locking clip.

4. Release the windshield wiper blade from the windshield wiper pivot arm.

INSTALLATION

1. Install the new windshield wiper blade to the windshield wiper pivot arm.

2. Push the windshield wiper blade fully home, to engage the windshield wiper pivot arm locking clip, check the windshield wiper blade for retention.

3. Install the windshield wiper pivot arm to the windshield wiper pivot shaft.
   - Install the nut but do not fully tighten at this stage.

4. 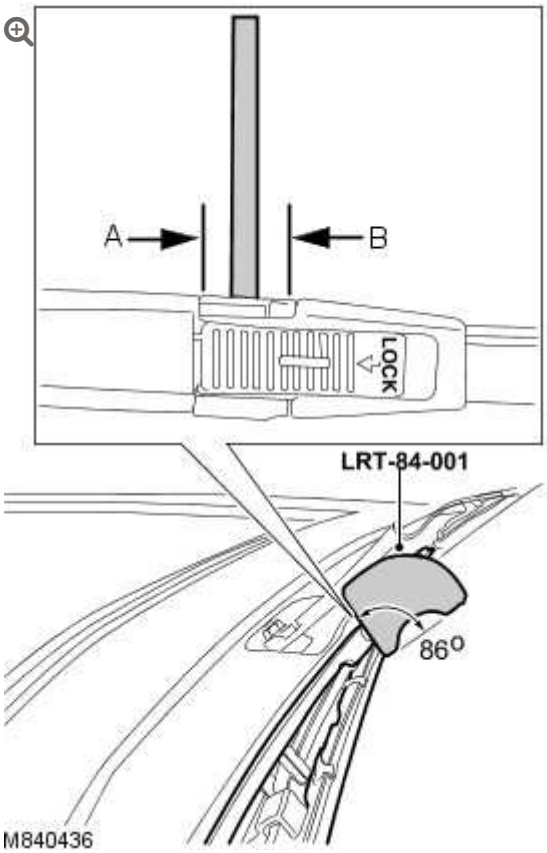

   Align the special tool between points A and B on the windshield wiper pivot arm.
   - Align the face of the windshield wiper pivot arm to the special tool angle of 86 degrees.

5.

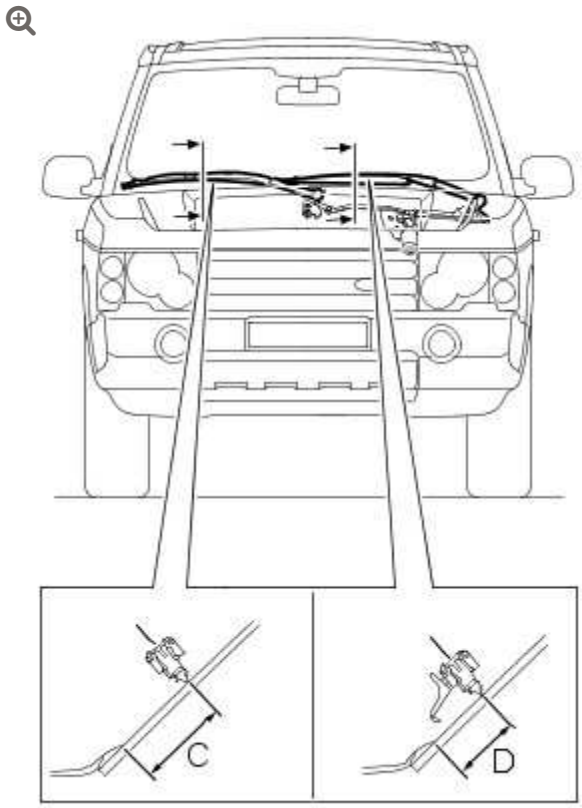

M840435A

Retaining an 86 degrees angle, set the respective windshield wiper pivot arm to the dimension shown.

- Passenger side C = 58 mm (2.283 inches). Drivers side D = 40.5 mm (1.594 inches).
- The measurement must be taken from the plenum chamber glass seal, to the lip of the windshield wiper blade adjacent to the windshield wiper pivot arm fulcrum.

6. Tighten the windshield wiper pivot arm nut to 34 Nm (25 lb.ft).

7. Install the windshield wiper pivot arm nut cover.

8. Close the hood.

WIPERS AND WASHERS

WIPER LINKAGE ASSEMBLY (G913866)

REMOVAL AND INSTALLATION

84.15.26	LINKAGE - WIPER - RENEW	ALL DERIVATIVES	0.7	USED WITHINS	+

REMOVAL

1. Remove the cowl panel grille.
   For additional information, refer to: Cowl Panel Grille (501-02, Removal and Installation).

2. Remove the plenum chamber.
   For additional information, refer to: Plenum Chamber (412-01, Removal and Installation).

3.

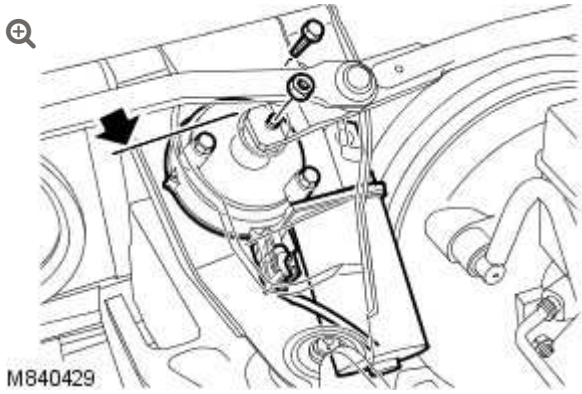

Disconnect the windshield wiper motor electrical connector.

4. Remove the windshield wiper assembly.
   - Remove the 5 bolts.

INSTALLATION

1. Install the windshield wiper motor assembly.
   - Tighten the bolts to 10 Nm (7 lb.ft).

2. Connect the windshield wiper motor electrical connector.

3. Install the plenum chamber.
   For additional information, refer to: Plenum Chamber (412-01, Removal and Installation).

4. Install the cowl panel grille.
   For additional information, refer to: Cowl Panel Grille (501-02, Removal and Installation).

WIPERS AND WASHERS

DIAGNOSIS AND TESTING

PRINCIPLE OF OPERATION

For a detailed description of the wipers and washers systems and operation, refer to the relevant Description and OPeration section of the workshop manual. REFER to: Wipers and Washers (501-16 Wipers and Washers, Description and Operation).

INSPECTION AND VERIFICATION

CAUTION:

Diagnosis by substitution from a donor vehicle is **NOT** acceptable. Substitution of control modules does not guarantee confirmation of a fault and may also cause additional faults in the vehicle being checked and/or the donor vehicle.

NOTE:

Check and rectify basic faults before beginning diagnostic routines involving pinpoint tests.

1. Verify the customer concern.

2. Visually inspect for obvious signs of mechanical or electrical damage.

Visual Inspection

MECHANICAL	ELECTRICAL
▪ Windshield and rear window for damage or contamination e.g. road film or general residue deposits ▪ Wiper blades, arms and linkage for wear, security, damage and freedom of movement ▪ Windshield/Rear window/Headlamp washer fluid level ▪ Washer pipes and jets for leaks, restrictions and damage ▪ Wipers and washers control switch, damage and freedom of movement	▪ Battery condition and state of charge ▪ Fusible links ▪ Fuses ▪ Relays ▪ Electrical connections ▪ Front and rear wiper motors ▪ Wiper switch ▪ Washer pumps ▪ Rain/light sensor ▪ Heated front washer jets ▪ Ignition switch ▪ Light switch ▪ Ambient air temperature sensor ▪ Central Junction Box (CJB) ▪ Battery Junction Box (BJB) ▪ Anti-Lock Braking System (ABS) module ▪ Automatic Temperature Control Module (ATCM) ▪ Instrument Cluster (IPC) module ▪ Controller Area Network (CAN) circuits

3. If an obvious cause for an observed or reported concern is found, correct the cause (if possible) before proceeding to the next step

4. If the cause is not visually evident, verify the symptom and refer to the Symptom Chart, alternatively check for Diagnostic Trouble Codes (DTCs) and refer to the DTC Index.

SYMPTOM CHART

SYMPTOM	POSSIBLE CAUSES	ACTION
Wipers and washers inoperative	▪ Washers inoperative ▪ Wiper arm(s) incorrectly installed/aligned ▪ Steering column right multifunction switch internal failure ▪ Wipers and washers control switch circuit short circuit to ground, short circuit to power, open circuit, high resistance	▪ Listen for washer motor operation. Check and top up washer fluid level. Check and rectify blocked washer circuit. Check for DTCs indicating a wiper/washer circuit fault. Rectify as necessary ▪ Check the installation/alignment of the wiper arms. Ensure motor/mechanism is not jammed or seized ▪ Check if the wipers and washers control switch retaining screws are tightened according to specifications. Inappropriately tightened screws might cause steering wheel module failure ▪ Refer to the electrical circuit diagrams and check the wipers and washers control switch circuit for short circuit to ground, short circuit to power, open circuit, high resistance
Wiper blade(s) drag/judder across the windshield/rear window	▪ Contamination of the windshield/rear window ▪ Incorrectly installed wiper arm(s)	Clean the windshield/rear window. Check for the correct installation and tension of the wiper arm(s). Refer to the

SYMPTOM	POSSIBLE CAUSES	ACTION
	▪ Wiper arm(s) incorrectly aligned to the screen ▪ Wiper arm(s) spring tension inadequate	relevant section of the workshop manual. Rectify as necessary.
Very slow operation of the wiper(s) across the windshield/rear window	▪ Low battery voltage ▪ Front wiper linkage seized or fouling ▪ Wiper circuit fault ▪ Wiper switch fault, high resistance	Check the battery condition and state of charge. Check the wiper linkage for fouling. Disconnect the motor from the linkage. Refer to the relevant section of the workshop manual. Check the linkage operation. Check for DTCs indicating a wiper circuit fault. Rectify as necessary.
Wiper(s) inoperative		
Noisy operation of wiper(s)	▪ Wiper motor/linkage fault	Lift the wiper arm(s) from the windshield/rear window and recheck the noise level during the wiper sweep operation.
Noisy operation of washers	▪ Washer motor(s) faulty ▪ Washer system blocked or partially blocked	Listen for washer motor operation. Check and top up washer fluid level. Check and rectify blocked washer circuit. Check the wiper/washer circuit for DTCs indicating a fault. Rectify as necessary.
Washers do not operate	▪ Fluid level low ▪ Washer circuit blocked ▪ Washer circuit faulty	

DTC INDEX

For a list of Diagnostic Trouble Codes (DTCs) that could be logged on this vehicle, please refer to Section 100-00. REFER to: Diagnostic Trouble Code (DTC) Index - DTC: Module Name: Central Junction Box (100-00 General Information, Description and Operation).

2012.0 RANGE ROVER (LM), 501-16

WIPERS AND WASHERS

DESCRIPTION AND OPERATION

Wiper and Washer System Component Location

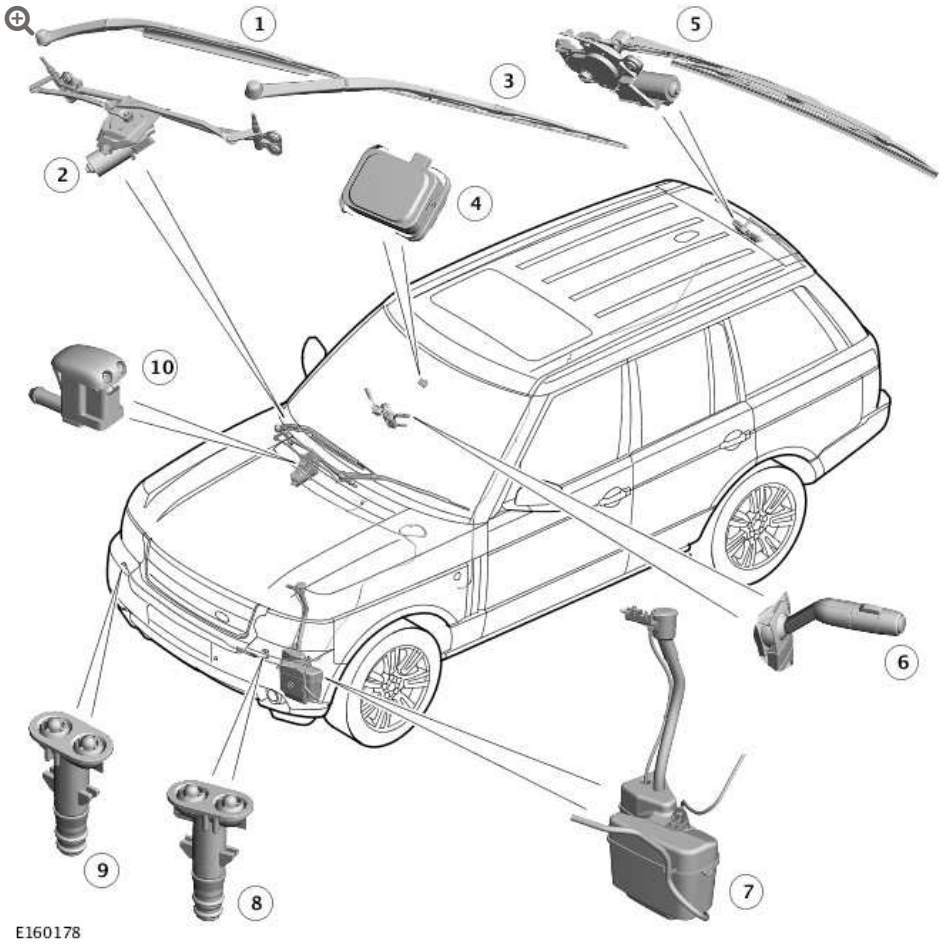

ITEM	DESCRIPTION
1	Wiper arm assembly RH
2	Wiper linkage and motor assembly
3	Wiper arm assembly LH

ITEM	DESCRIPTION
4	Rain/light sensor
5	Rear wiper, motor and control module assembly
6	Wiper control switch
7	Washer reservoir and pumps assembly
8	LH headlamp power wash jet
9	RH headlamp power wash jet
10	Heated front washer jet (2 off)

GENERAL

The wipers and washers system functions on receipt of requests made by the driver or the rain/light sensor. All wiper functions for the front and tailgate wipers are controlled from a wiper control switch located on the right hand side of the steering column.

The wiper and washer system comprises:

- Front and tailgate wiper motors
- A windshield wiper linkage
- Two front and one tailgate wiper arms and blades
- Two front heated washer jets and one rear washer jet
- Two headlamp washer jets
- A windshield washer reservoir, a front/rear washer pump and a headlamp washer pump
- A wiper control switch
- A rain/light sensor

The wiper system is equipped with a rain/light sensor, which controls the automatic wiper functions and also the automatic lighting

functions. The sensor, located below the interior rear view mirror, detects rain drops on the windscreen and automatically operates the wipers in the intermittent mode. The column stalk switch must be in the intermittent position for rain sensor controlled wiper operation. For additional information, refer to: Exterior Lighting (417-01 Exterior Lighting, Description and Operation).

The windshield wiper system has 4 wiper stages of operation and 4 intermittent wiper delay periods. The 4 wiper stages are as follows:

- Flick wipe
- Intermittent
- Normal (slow) speed continuous
- Fast speed continuous

The intermittent, normal and fast speeds are affected by road speed. The intermittent wiper delay periods change with the road speed, with the delay decreasing as the road speed increases. The normal continuous operation changes to intermittent operation when the vehicle is stationary.

The wipers and washers operate with the ignition switch in positions I or II (aux or ign). Wiper functions are suspended during engine cranking to reduce battery power consumption under high load conditions.

Diagnostic information for the wiper system is available and can be retrieved using the Land Rover approved diagnostic system.

WIPER CONTROL COLUMN SWITCH

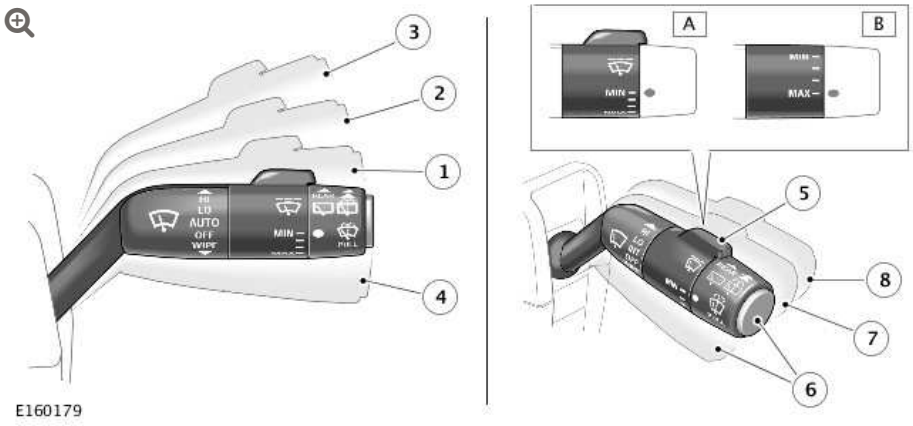

ITEM	DESCRIPTION
A	Rain sensor minimum sensitivity. Intermittent wipe maximum delay.
B	Rain sensor maximum sensitivity. Intermittent wipe minimum delay.
1	Rain sensor activated wipe or intermittent wipe (dependent on option fitted).
2	Low speed wipe.
3	High speed wipe.
4	Single wipe.
5	Intermittent variable delay/rain sensor sensitivity
6	Windscreen washers
7	Rear wipe
8	Rear wash/wipe

The wiper control switch is located on the right hand side of the steering column and controls all front and tailgate wiper functions.

Moving the switch up 1 position selects intermittent windshield wiper operation. The rotary potentiometer on the stalk selects 1 of 6 delay periods. When a rain/light sensor is incorporated into the system, the intermittent position also initiates wiper operation controlled by the rain/light sensor. The sensitivity of the rain/light sensor can be adjusted by rotating the rotary potentiometer to 1 of the 6 positions.

Moving the switch up 1 further position selects normal (slow) continuous wiper operation. Moving the switch up to the last position selects fast continuous wiper operation.

Moving the switch down selects the flick wipe function. The windshield wipers will operate at normal speed for as long as the flick wipe switch position is operated and will stop at the park position when the switch is released.

Moving the switch rearwards, towards the driver, selects the front wash/wipe function. The washer pump will operate for as long as the switch is held. A short operation operates the pump momentarily and the wipers complete 3 full cycles before stopping. The headlamp washers will operate if programmed wash/wipe is selected and the headlamps are on. The power wash function can also be selected by depressing the button on the end of the stalk.

Rotating the outer ring of the wiper control switch to the first position selects the tailgate wiper intermittent mode on. Rotating the outer ring of the wiper control switch further on to the second position selects the tailgate wiper normal mode on. In intermittent mode, the tailgate wiper will complete 1 full cycle and will then operate on an intermittent function until selected off. The intermittent delay between wipes can be adjusted by selecting the wiper on, then off and then on again. Moving the switch forward to the second position selects the programmed rear wash/wipe function. The wiper completes 5 full cycles with 3 automatic, short operations of the rear washer pump. The tailgate wiper then operates in the tailgate wiper on mode until selected off.

The tailgate wiper also operates continuously if reverse gear is selected and the windshield wipers are on.

The wiper control switch comprises 8 switch positions and two intermittent rotary controls. The inner rotary control selects the

intermittent delay between wipes. The outer rotary control selects the tailgate wiper positions.

The switch positions each complete a combination of earth paths to 3 connections on the CJB (central junction box). The CJB interprets the selected combination of switches and operates the respective function accordingly.

WINDSHIELD WIPERS

The windshield wiper system comprises:

- Wiper motor and linkage assembly
- Washer reservoir and pumps
- Wiper arms and blades.

WIPER LINKAGE

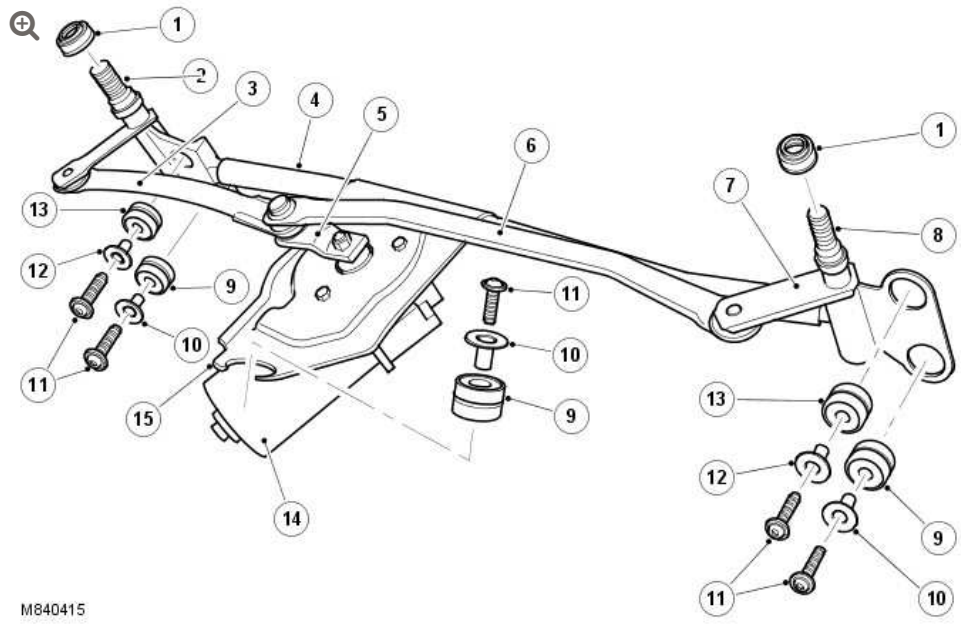

ITEM	DESCRIPTION
1	Wiper spindle cap (2 off)
2	RH pivot housing assembly
3	Link rod

ITEM	DESCRIPTION
4	Tube
5	Motor crank
6	Link rod
7	Crank
8	LH pivot housing assembly
9	Bush
10	Sleeve
11	Bolt
12	Sleeve
13	Bush
14	Motor assembly
15	Bracket

The wiper linkage and motor assembly are available as separate components. The wiper linkage differs between LH and RH drive models. The wiper motor is common to LH and RH drive models.

The assembly is located below the plenum grill in the engine compartment and is secured with bushes, sleeves and bolts. The rubber bushes isolate the assembly from the body mountings.

The linkage assembly comprises a main tube, with a pivot housing at each end. A bracket is attached, offset along the tube length, which locates the motor assembly. A motor crank is positively attached to the motor output shaft. A link rod is connected to the motor crank and is connected at the opposite end to the RH pivot housing, via a crank. The RH link rod has a pivot attachment for the LH link rod, which is connected at its opposite end to the RH pivot housing, via a second crank.

The motor crank converts rotary motion from the motor output shaft into linear movement of the link rods. The cranks, connected between the each link rod and pivot housing, convert the linear motion back to rotary motion of the pivot housing. This rotary motion is passed to the wiper arms and blades causing the blades to wipe an arc across the windscreen.

WIPER MOTOR

The motor assembly comprises a dc motor, which drives a gear wheel via a worm drive attached to the motor spindle. The gear wheel has a central spigot, which provides the attachment point for the motor crank.

The motor is connected electrically by a four-pin connector. The connector supplies 2 battery voltage feeds to the motor. The motor has 3 sets of brushes with 1 brush connected to ground. One feed is direct to the motor brush opposite the ground brush and operates the motor at normal (slow) speed. The second feed is connected to a motor brush, which is offset from the ground brush and operates the motor at fast speed. With the power supplied through this brush, the current flows through fewer coil windings. This results in a lower resistance to the current flow to the ground brush and gives a higher motor rotational speed.

The motor has an internal track, which signals the CJB when the wipers have reached the park position. The park signal is an open circuit when the wipers are in the park position. When the wipers are switched off and the CJB receives the park position signal from the motor, the CJB shorts the motor via a relay bridge circuit. This short circuit has the effect of applying a brake to the motor, giving precise positioning of the wiper blades in the park position.

WIPER ARMS

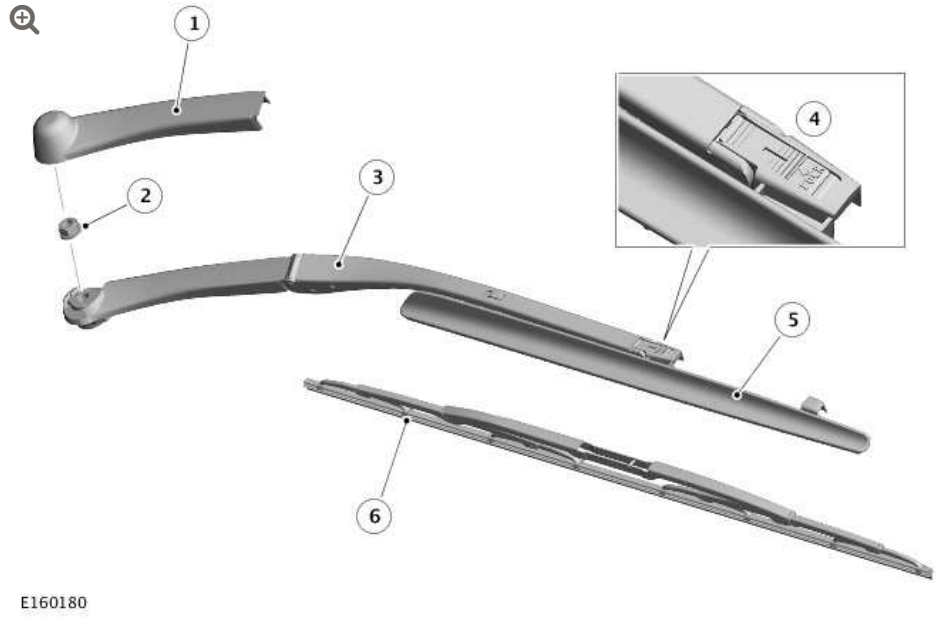

ITEM	DESCRIPTION
1	Spindle cap
2	Self locking nut
3	Wiper arm
4	Blade locking clip
5	Air deflector
6	Wiper blade

The wiper arms are positively located on tapered splines on the wiper linkage spindles. The arm is located on a curved wiper angle adjuster, which mates with the curved underside of the arm attachment. A curved slot in the arm attachment locates an adjustment shim and the 3 components are retained under compression on the spindle spline by a self-locking nut.

The wiper angle adjuster and the angle adjust shim allow the approach angle of the wiper blade to be finely adjusted to its optimum wiping angle. The adjustment allows the approach angle of the blade to be adjusted to 2° on each side of the spindle axis. This

adjustment provides precise adjustment of the blade approach angle for maximum wiper performance. The wiper angle adjuster is pressed onto the spindle and requires a tool for removal. Once removed, the wiper angle adjuster must be discarded and new one fitted on re-assembly.

The wiper arm has a pivot point, midway between the spindle attachment and the blade. Two tension springs are connected to the wiper arm on each side of the pivot point and apply pressure to maintain the wiper blade in contact with the windscreen.

The wiper blades are attached to the wiper arms with clips that allow the blade to pivot. Each blade comprises a number of levers and yokes to which the rubber wiper blade is attached. The levers and yokes ensure that the pressure applied by the arm tension spring is distributed evenly along the full length of the blade and also allow the blade to adjust to the curvature and contour of the windscreen. The driver's side blade is fitted with an aerofoil, which presses the blade onto the windscreen at high speed, improving the wiper performance.

WASHER RESERVOIR AND PUMPS

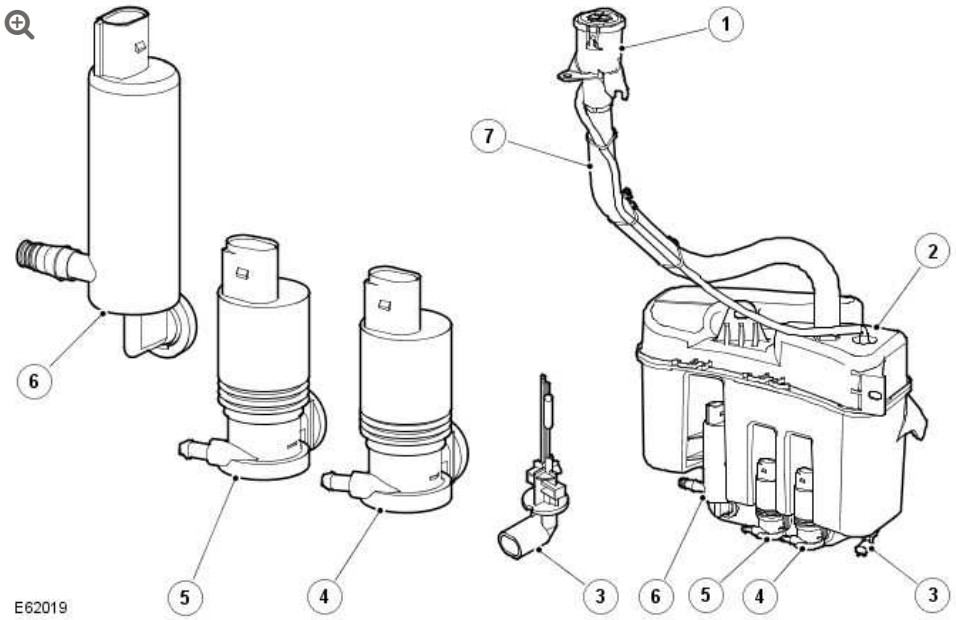

ITEM	DESCRIPTION
1	Filler cap
2	Reservoir
3	Fluid level sensor
4	Front washer pump
5	Headlamp power wash pump
6	Rear washer pump
7	Filler tube

The windscreen washer system comprises a reservoir, a washer pump, 2 washer jets and hoses.

The plastic, moulded reservoir is located in the LH wheel arch, behind the liner and has a capacity of 12.3 pints (7 litres). It is secured to the body and front panel with bolts and washers. A boss on the reservoir locates in a slot in the front panel and provides additional support.

The reservoir has 3 recessed holes on its rear face, which provide location for the front, rear and headlamp power washer pumps. The pumps are push fitted into grommets, which seal the pumps in their locations. A hole in the top of the reservoir allows for the fitment of a flexible filler tube. The hose is routed into the left hand side of the engine compartment and is sealed with a rubber cap. A breather hose is fitted into an elbow on the top of the reservoir and is routed alongside the filler and secured in a clip near the filler cap in the engine compartment.

A hole in the base of the reservoir provides the location for the fluid level sensor. The hole provides access to an internal tube inside the reservoir, into which the sensor is fitted. The sensor has 2 pegs, which positively locate the sensor in the reservoir when turned through 90°.

The sensor reacts to the influence of a magnetic field. A float, with integral magnet, is located around the tube, inside the reservoir. The sensor has 2 contacts inside a glass tube, which are normally open. When the fluid level reduces, the magnetic float moves down the tube. When the magnet reaches the sensor contacts, the magnetic field closes the contacts. This completed circuit is sensed by the Light Control Module (LCM), which displays the low fluid level message in the instrument cluster.

HEATED WINDSCREEN WASHER JETS

Two windscreen washer jets are located in the rear trim panel on the bonnet outer surface. The washer fluid feed hose from the front screen pump is connected to a 'Y' piece connector located between the 2 jets. Two short lengths of hose connect the jets to the 'Y' piece. Each jet contains a Non-Return Valve (NRV) to prevent washer fluid draining back to the reservoir and also to limit the amount of washer fluid, which can be forced by gravity from the jet during cornering.

Each washer jet has 2 ball nozzles, which can rotate in their housings to obtain the optimum fluid application onto the windscreen. Each washer jet contains a heater element, which prevents the fluid freezing in the nozzles in very cold conditions. The jet heater elements are controlled by the ATC (automatic temperature control) system, which energises the heater elements when the ambient temperature falls below a predetermined temperature.

WIPER BLADE HEATING

The lower, black, portion of the windscreen contains 6 heating elements, which run from one side of the screen to the other. These elements are designed to heat the area of the windscreen where the wiper blades rest to prevent freezing in cold conditions.

The blade heating elements are controlled by the ATC system, which energises the blade heating elements when the ambient temperature falls below a predetermined temperature. The operation of the blade

heating elements is activated simultaneously with the heated washer jets.

RAIN/LIGHT SENSOR

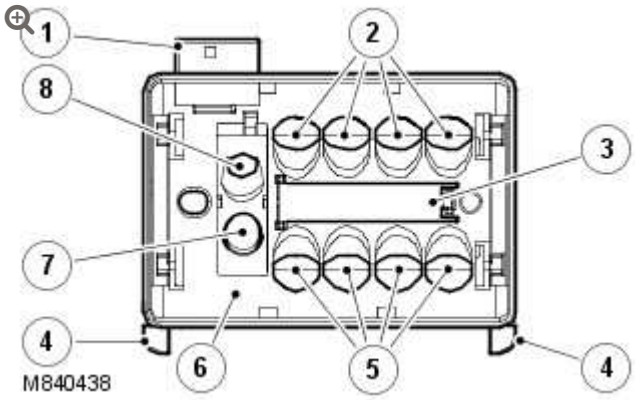

ITEM	DESCRIPTION
1	Connector
2	Receiver diodes
3	Heater element
4	Retaining clip
5	Transmitter diodes
6	Rain/light sensor body
7	Ambient light sensor
8	Forward light sensor

The rain/light sensor is located at the upper edge of the windshield, behind the interior rear view mirror. The sensor is mounted on an optical unit which is heat bonded to the inner surface of the windscreen during manufacture. If damage occurs to the optical unit or the windshield, then a new windscreen will be required and fitment can only be performed by an authorized Land Rover dealer.

The rain/light sensor unit attaches to the optical unit via 4 clips which latch onto formed tags on the optical unit. Positive retention is achieved by 2 retaining clips which force the clips onto the tags. The retaining clips must be withdrawn to facilitate sensor removal.

The sensor provides information to the CJB, via the LIN (local interconnect network) bus, for the optimum wiper operation for the prevailing conditions to maintain the screen in a clear condition at all times. The rain/light sensor is an optical unit, which operates on an infrared waveband. The sensor uses the principle of the laws of reflection on interfacing surfaces between materials with differing refraction indices.

The sensor contains 4 transmitter and receiver diodes for increased sensitivity and also contains a light sensor for operation of the automatic headlamp function.
For additional information, refer to: Exterior Lighting (417-01 Exterior Lighting, Description and Operation).

Rain/light Sensor Functionality

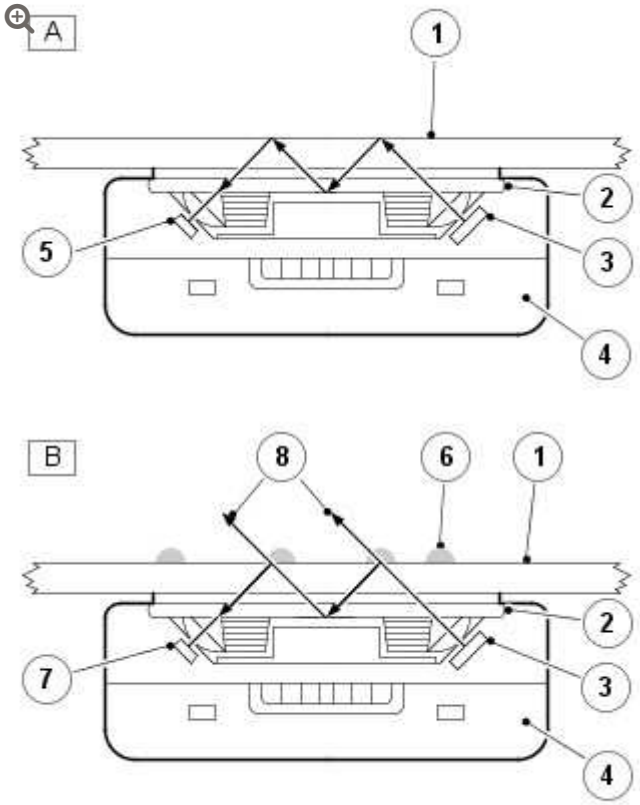

M840421

ITEM	DESCRIPTION
1	Windscreen - Outside surface
2	Optical unit
3	Transmitter diodes (100% light transmitted)
4	Rain/light sensor unit
5	Receiver diodes (100% received)
6	Water droplets/film
7	Receiver diodes (less than 100% light received)
8	Lost light

The rain/light sensor contains transmitter and receiver diodes, which transmit and receive infrared light, which is directed onto the windscreen via an optical unit. The light is directed at an angle so that the light is reflected 100% on the outside surface of the screen

and is transmitted back into the optical unit. To receive a 100% reflection, the outer screen surface must be clean and dry.

The light is reflected 4 times from when it leaves the transmitter diodes to when it is picked up by the receiver diodes. If the windscreen is wet or dirty in the area of the optical unit, the clean conditions for 100% reflection means that some of the light reflected is lost. As the screen becomes dirtier or wetter, the received light is evaluated by the rain/light sensor and translated into a signal value. A micro-controller within the sensor monitors the change in signal and initiates the appropriate wipe cycle via LIN bus signals to the CJB.

The software can compensate for the long-term effects of scratches and stone chips in the area of the optical unit and the short term effects of dirt or smears caused by worn wiper blades. A heater element is also contained within the rain/light sensor and uses ambient temperature LIN bus signals from the IC to keep the optical unit clear of frost or condensation..

rain/light sensor incorporates a light guide. The light guide directs the ambient light and a proportion of the forward light (from the driving direction) to a light sensitive diode. This is used for the rain sensor sensitivity in low ambient light levels and is also used to control the automatic headlamp function.
For additional information, refer to: Exterior Lighting (417-01 Exterior Lighting, Description and Operation).

Intermittent (single wipe), continuous slow, and continuous fast front wiper operations are controlled by the rain/light sensor when enabled.

TAILGATE WIPER

The tailgate wiper system comprises:

- Wiper motor and control module assembly
- Rear washer pump
- Wiper arm and blade.

TAILGATE WIPER ASSEMBLY

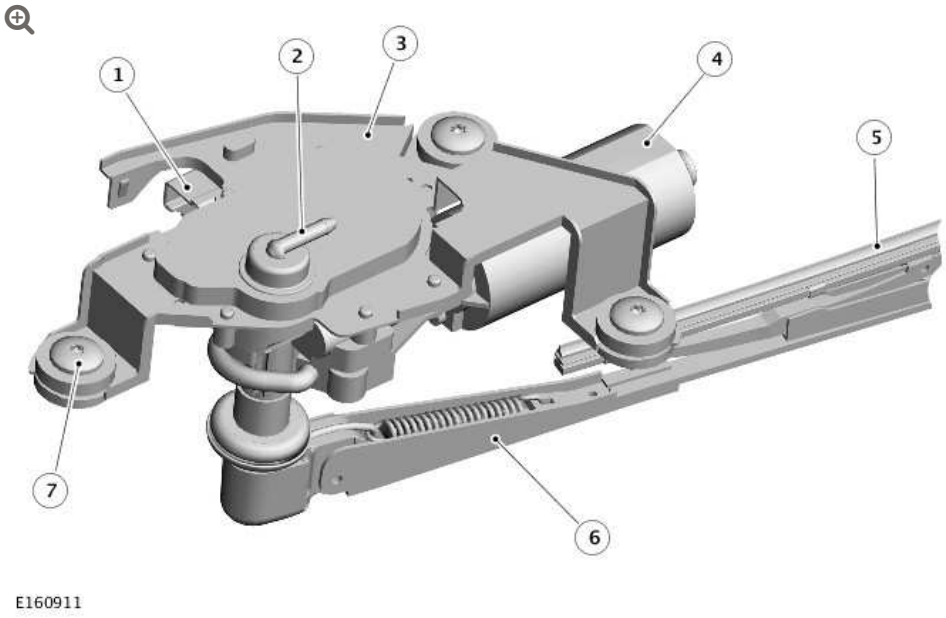

ITEM	DESCRIPTION
1	Harness connector
2	Washer fluid hose connection
3	Mounting bracket
4	Motor
5	Wiper blade
6	Wiper arm
7	Torx head screw (3 off)

The rear wiper and washer operation is controlled by a control module, which is located with the rear wiper motor. The rear wiper operation is remote from the CJB control of the front wiper systems.

The rear wiper motor and control module assembly is located in the upper tail door, behind a trim panel. The assembly is secured to a bracket on the upper tail door with 3, Torx head screws. Rubber bushes isolate the motor assembly from the bracket, which help reduce the transmission of motor operating noise to the tail door.

The assembly comprises the motor, mounting bracket and control module. The motor is located on a worm drive gearbox mechanism, which converts the rotary motion of the motor output spindle into the required arc for the rear wiper blade. The control module is integral with the motor and has 2 plug sockets, which accept 2 multiplugs from the harness. One multiplug has 2.5 mm diameter wires. Two of the wires supply permanent battery feed and ground connections for the motor and control module. The third wire in this plug supplies a power supply to the rear washer pump. The second multiplug has 0.35 mm diameter wires and carries signal data from the wash/wipe control stalk switch and the LCM. There is also a power input from the CJB.

The rear washer feed hose is located at the rear of the motor spindle. The hose is connected to a 90° connector allowing the washer fluid to flow through the centre of the motor spindle. An NRV is located in the hose, near the motor, and prevents fluid returning to the reservoir.

The motor spindle is a conventional design with a taper spline location for the wiper arm and a threaded shank to secure the arm to the spindle.

TAILGATE WIPER

The wiper arm is similar in design to the front wiper arms. The arm attachment hole has tapered splines, which mate with the splines on the wiper spindle. The arm is secured to the wiper motor spindle with a spring washer and nut. The wiper arm has a pivot point, close to the spindle attachment. A tension spring is connected to the wiper

arm on each side of the pivot point and applies pressure to maintain the wiper blade in contact with the windscreen.

The wiper blade is attached to the wiper arm with a clip that allows the blade to pivot. The blade comprises a number of levers and yokes to which the rubber wiper blade is attached. The levers and yokes ensure that the pressure applied by the arm tension spring is distributed evenly along the full length of the blade and also allow the blade to adjust to the curvature and contour of the windscreen.

A plastic cap located on the arm pivot point, covers the spindle attachment nut. The cap also contains 2, adjustable ball jets, which direct washer fluid onto the tail door window. The cap, when installed, connects with the hollow motor spindle, through which the washer fluid flows to the jets.

HEADLAMP POWER WASH

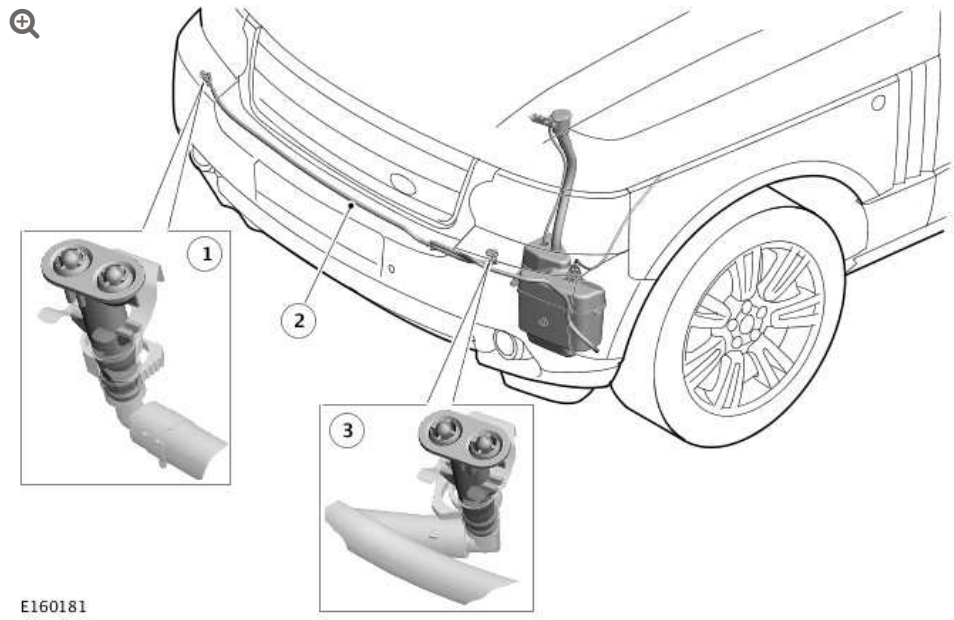

ITEM	DESCRIPTION
1	RH headlamp power wash jet
2	Hose
3	LH headlamp power wash jet

ITEM	DESCRIPTION

A power wash jet for each headlamp is located in a housing on the top surface of the front bumper. The jets are fed with fluid at high pressure from the headlamp power wash pump. A large diameter hose connects each jet to the pump. Each connection is secured with a metal clip to secure the hose due to the high pressure from the pump. Each jet directs the high-pressure fluid in a wide spray onto the headlamp lens.

OPERATION – FRONT WIPERS

The front wiper system has the following functionality:

- Intermittent wipe and delay adjustment or rain/light sensor (if fitted)
- Normal (slow) speed wipe
- Fast speed wipe
- Programme wash/wipe
- Flick wipe
- Headlamp power wash
- Motor blocking protection.

INTERMITTENT

Intermittent wiper operation is selected on the wiper control switch by moving the switch vertically to the first position. The intermittent delay period is adjustable using the rotary switch on the wiper control switch. The delay period is also subject to vehicle speed, with the selected delay period decreasing with an increase in road speed.

The rotary potentiometer selects differing resistance values for each position. The potentiometer is connected into a voltage divider circuit, with a 6.8kohm resistor. The power supply to the voltage

divider circuit is limited to 6.5V. This reduced voltage is used to determine the position of the rotary switch as follows:

ROTARY SWITCH POSITION	RESISTANCE	MIN. VOLTAGE	MAX. VOLTAGE	TYPICAL VOLTAGE
Error - Ground	<0.2kohm	-	-	<0.18V
1	2kohm ± 750ohm	1.00V	1.89V	1.48V
2	4kohm ± 750ohm	2.08V	2.70V	2.41V
3	6kohm ± 750ohm	2.80V	3.27V	3.04V
4	8kohm ± 750ohm	3.32V	3.69V	3.51V
Error - Positive	>20kohm	-	-	4.88V

The intermittent delay is also influenced by the road speed of the vehicle using a signal value derived from the Anti-Lock Brake System (ABS) control module on the high speed CAN (controller area network) bus. The time delay periods for the vehicle stationary and when moving at different speeds are shown in seconds in the following table:

ROTARY SWITCH POSITION	VEHICLE SPEED MPH (KM/H)						
	4 (6)	4 - 19 (6 - 30)	19 - 44 (30 - 70)	44 - 62 (70 - 100)	62 - 87 (100 - 140)	>87 (140)	>112 (180)
Error - Ground	20	6	5	4	3	3	3
1	26	19	17	15	15	13	13
2	17	12	11	10	9	7	7
3	10	6	6	5	4	3	3
4	5	3	3	2	2	2	2
Error - Positive	8	6	5	4	3	3	3

The wiper control switch positions also influence the operation of the rain/light sensor by adjusting its sensitivity. Refer to the following rain/light sensor operation section for details.

NORMAL (SLOW) SPEED

The normal (slow) speed continuous wiper operation is selected by moving the switch vertically to the second detente position. The wipers will operate continuously when the vehicle is moving. When the vehicle is stationary (less than 4 mph (6 km/h)), the CJB operates the wipers in the intermittent mode, using a 3 second intermittent delay period..

FAST SPEED

The fast speed continuous wiper operation is selected by moving the switch vertically to the third detente position. The wipers will operate continuously at fast speed when the vehicle is moving. When the vehicle is stationary (less than 4 mph (6 km/h)), the CJB operates the wipers in normal (slow) speed mode

RAIN/LIGHT SENSOR

The rain/light sensor is active when the wiper control switch is in the intermittent position. The rain/light sensor suspends wiper operation when the area of the windscreen for the rain/light sensor is dry and operates the wipers continuously (fast or slow speeds) when the windscreen is subject to heavy rainfall.

If the ignition is switched off and the wiper control switch remains in the intermittent position, the CJB will suspend rain/light sensor operation until intermittent operation is reselected, an adjustment of the rotary switch is made or programmed wash/wipe is selected.

The sensitivity of the rain/light sensor can be adjusted by the driver using the intermittent rotary switch on the wiper control switch. Six sensitivity levels of the sensor can be selected which has the effect of increasing or decreasing the wiper delay period, allow driver adjustment for the prevailing conditions. When several continuous

wipe cycles have taken place, the sensor will maintain the continuous operation to avoid switching back to intermittent from a continuous wipe and back again.

The rain/light sensor receives vehicle speed information from the ABS (anti-lock brake system) control module on the high speed CAN bus every 2 seconds. The sensor increases the sensitivity as the speed increases to optimize wiper operation. When the vehicle speed is reduced to less than 5 mph (8 km/h), the sensitivity is automatically reduced. Below this speed the wipers will only operate continuously in very heavy rain.

WASH/WIPE

Moving either the wiper control switch backwards selects front wash/wipe. This position is non-latching and the windshield washer pump is operated for as long as the switch is active. If the switch is only momentarily operated (less than 300 ms), only the washer pump operates. If the switch is activated for more than 300 ms, the CJB also powers the wiper motor after a 0.5 second delay. The CJB monitors the wash/wipe switch operation and after the switch is released, the CJB allows 3 full wipe cycles to clear the screen.

RESERVOIR LEVEL SENSOR

The sensor cannot determine the precise amount of fluid in the reservoir, but can detect when the fluid level has fallen below a certain point. When the fluid level is low, the magnetic float closes the sensor contacts, completing a circuit through the sensor. This completed circuit is sensed by the CJB to which the sensor is directly connected.

The fluid level sensor is monitored continuously by the CJB. The CJB checks the fluid level sensor when the ignition is switched on to give the driver an early warning of the low fluid level. The CJB then monitors the sensor value over a 25 second period when the ignition is on to prevent invalid messages due to fluid 'sloshing' in the reservoir.

When the CJB determines a low fluid level, a signal is transmitted on the high speed CAN bus to the IC to illuminate the 'WASHER FLUID LOW' message in the IC message center. The first illumination of this message is accompanied by a 'gong' sound to alert the driver to the low fluid level.

HEATED WINDSCREEN WASHER JETS

The heated washer jets are controlled by the ATC system and a heated washer jet relay in the CJB.

When the ignition is switched on and the ATC system detects an ambient temperature of less than 3°C (37°F), the ATC system completes an earth path for the coil of the heated washer jet relay. This allows battery voltage to pass through the relay contacts and operate the heater elements. The ATC maintains the power to the heater elements for as long as the ignition remains on or the ambient temperature remains below 6°C (42°F). If the ambient temperature increases to 6°C (42°F) or above, the ATC system removes the earth for the relay coil, de-energizing the heater elements.

The ATC system will also prevent heated washer jet operation if the battery voltage falls to below 11.4V. This is to relieve loads on the battery and alternator when electrical loads are high. Heated washer jet operation will be resumed when the battery voltage exceeds 12.2V.

WIPER MOTOR BLOCKING PROTECTION

The wiper park signal is also used by the CJB for blocking protection of the windshield wiper motor. This feature protects the motor in the event of the wiper operation being obstructed.

If the CJB does not receive the wiper park signal for a period of 16 seconds, when the wiper motor is active, the CJB removes the power supply to the motor. The motor is disabled for a period of 3 minutes or until the ignition is switched off and on again. Even after the 3 minute period has elapsed, the CJB will not automatically switch the

motor on, to prevent the risk of injury. The wiper switch must be moved off and then on to reactivate the wiper motor. The blocking protection is active in all wiper switch positions and can only be reset by turning the ignition off.

OPERATION – REAR WIPER

The rear wiper has the following functionality:

- Intermittent operation
- Adjustable intermittent wipe period
- Continuous reverse wipe function.

WIPER OPERATION

The tailgate wiper is operated by the wiper control switch. Rotating the outer ring of the switch the first position switches on the tailgate wiper intermittent mode. Rotating the switch forward to the second position switches on the tailgate wiper normal mode. Pressing the switch end selects the rear wash/wipe function.

When reverse gear is engaged and the tailgate wiper is on, the tailgate wiper is operated continuously. The continuous wipe will continue until reverse gear is disengaged or the tailgate wiper is switched off.

When rear wash/wipe is selected, the EJB (engine junction box) powers the washer pump for as long as the switch is held. When the switch is released, the EJB initiates 5 complete wipe cycles. The first 3 wipe cycles are each accompanied by a 0.5 second operation of the rear washer pump. The final 2 cycles are to clear the tail door window and do not have a washer pump operation. If intermittent remains selected, the tailgate wiper continues in intermittent mode.

INTERMITTENT ADJUSTMENT

The intermittent interval time of the tailgate wiper can be adjusted by the driver to wipe at between 1 and 30 second delays. Adjustment is performed by switching the tailgate wiper on for a short time and then off again. The next switching on of the tailgate wiper determines the delay period. The time lapse between the off and the next on signal is sensed by the CJB which sets this period as the requested time interval between wipes. If the next on signal is more than 30 seconds after the off signal, the CJB sets the time interval to the maximum 30 seconds.

REAR WIPER MOTOR BLOCKING PROTECTION

The tailgate wiper motor is protected by the CJB in the event of the wiper operation being obstructed.

HEADLAMP WASHER

The headlamp washers are only active when the headlamps are switched on and the ignition is on. The washers are controlled by the CJB, which limits their operation to preserve washer fluid in the reservoir.

With the ignition and lights on, the headlamp wash is activated on the first operation of the wiper control switch in the wash/wipe position. The CJB then suspends headlamp wash activation for the next 4 operations of the wash/wipe switch, with the headlamp power washers activated on the fifth operation of the switch.

The CJB monitors the operation of the wash/wipe switch and maintains a counter to restrict headlamp power wash operation to every fifth operation of the wash/wipe switch. The CJB also maintains a timer, which prevents a second operation of the headlamp wash within a 3 minute period. The counter and timer are reset when the ignition is switched off.

When headlamp power wash is active, the CJB energizes the wash pump twice per cycle. The headlamp wash pump is powered for a 0.5 second period. The CJB then initiates a 2 second delay before powering the headlamp wash pump for a second 0.5 second period.

If the washer fluid level becomes low, the CJB suspends headlamp power wash operation to preserve the remaining washer fluid.

WIPERS AND WASHERS CONTROL DIAGRAM

NOTE:

A = Hardwired; B = K bus; C = Diagnostic DS2 bus; K = I bus

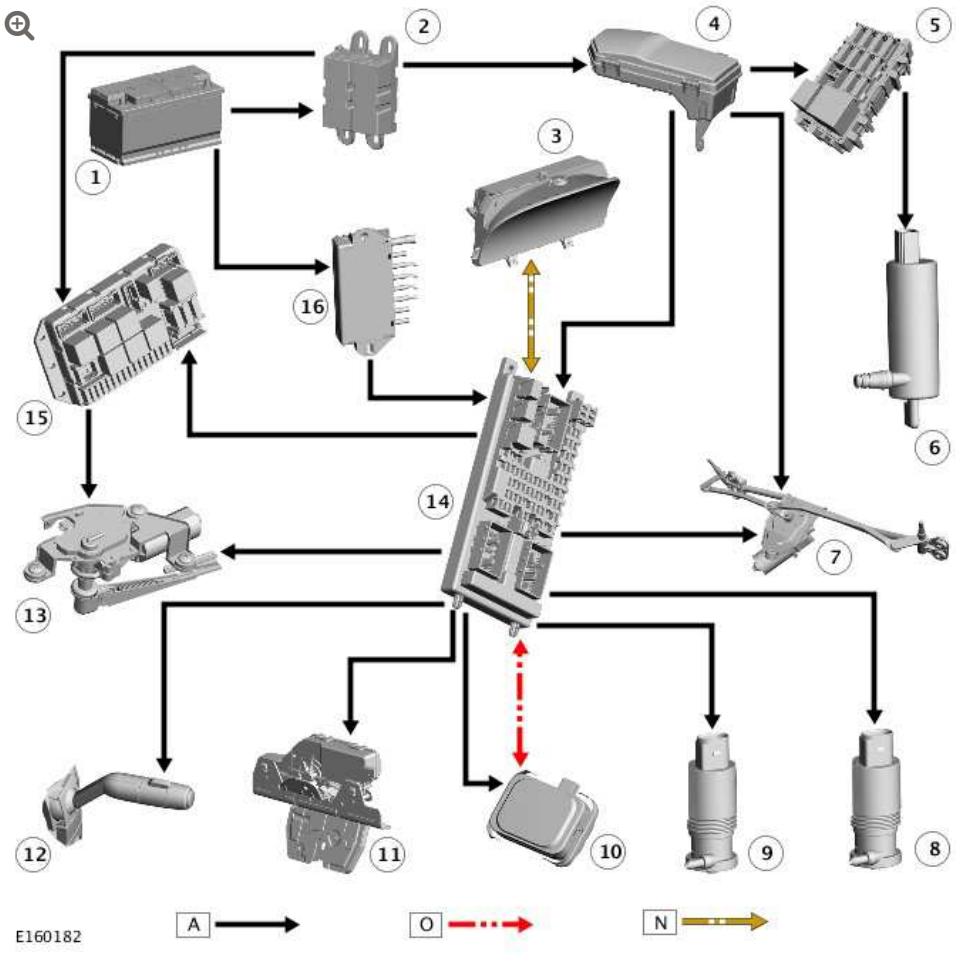

ITEM	DESCRIPTION
1	Battery
2	BJB2
3	Instrument cluster
4	EJB
5	Auxiliary junction box
6	Power wash pump
7	Front wiper motor
8	Front washer motor
9	Rear washer motor
10	Rain/light sensor
11	Tailgate ajar switch
12	Wiper control switch
13	Rear wiper motor
14	CJB
15	RJB

BUMPERS

SPECIFICATIONS

Torque Specifications

DESCRIPTION	NM	LB-FT
Front bumper nuts	45	33
Horn assembly bolt	20	15

BUMPERS

FRONT BUMPER (G1226524)

REMOVAL AND INSTALLATION

76.22.49	BUMPER ARMATURE - FRONT - RENEW	ALL DERIVATIVES	1.6	USED WITHINS	+

REMOVAL

NOTE:

Removal steps in this procedure may contain installation details.

All vehicles

1. **WARNING:**

   Make sure to support the vehicle with axle stands.

   Raise and support the vehicle.

2.

Refer to: Front Bumper Cover (501-19, Removal and Installation).

	Vehicles built 10MY upto 11MY

3.

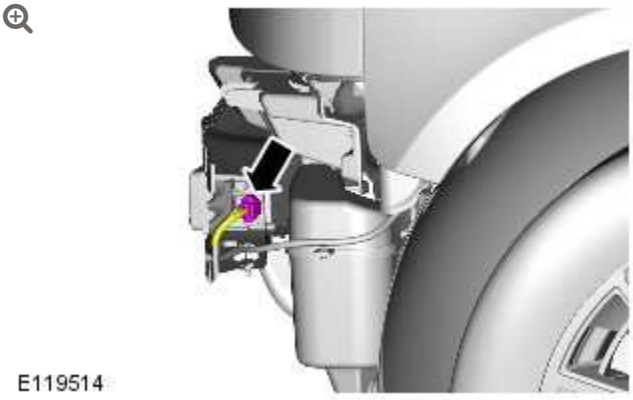

4.

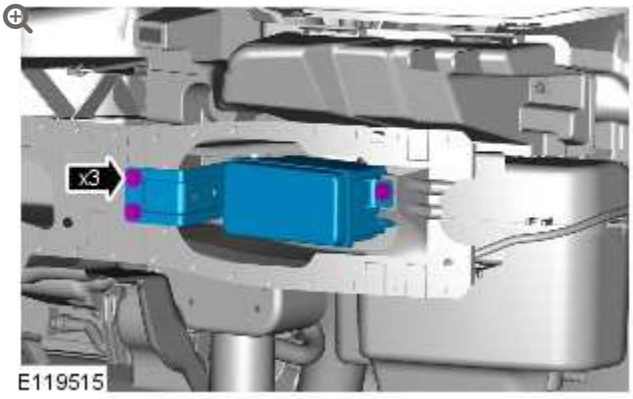

Torque: **5 Nm**

	All vehicles

5.

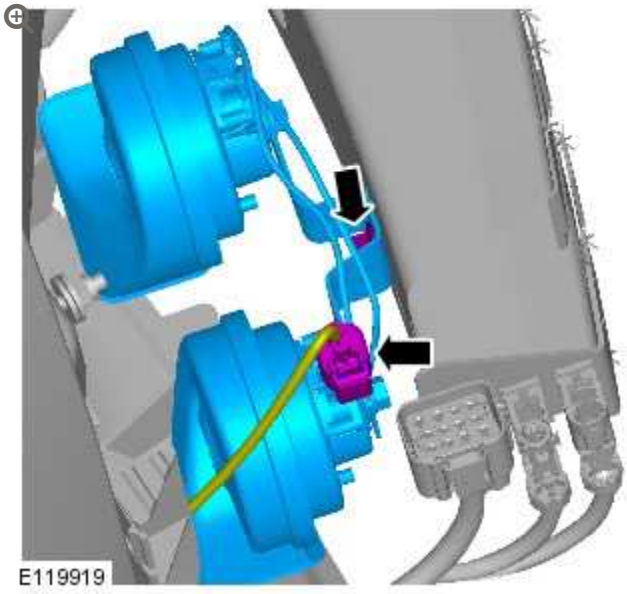

Torque: **20 Nm**

	Vehicles built 11MY onwards

6.

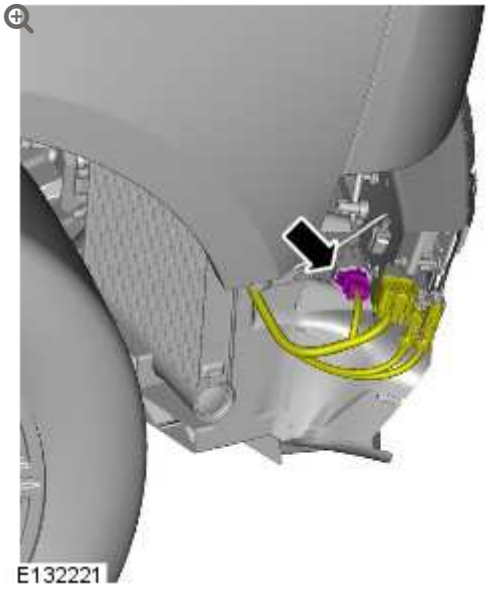

7.

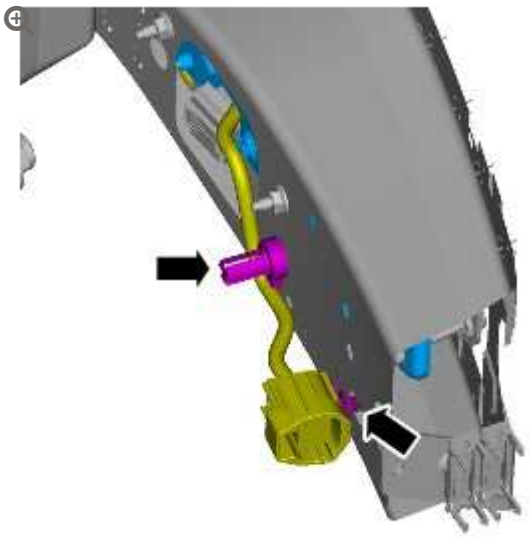

E132222

8.

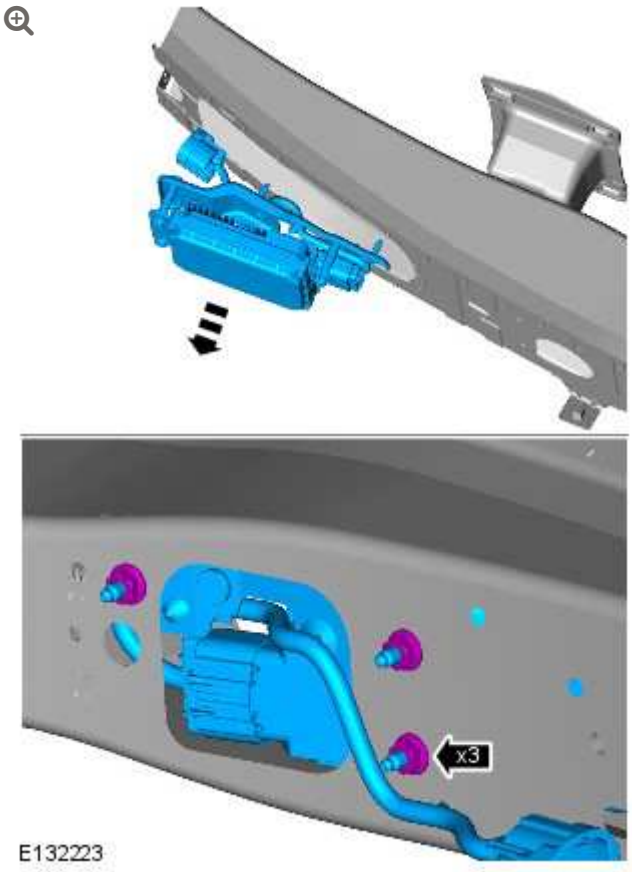

E132223

Torque: **9 Nm**

All vehicles

9.

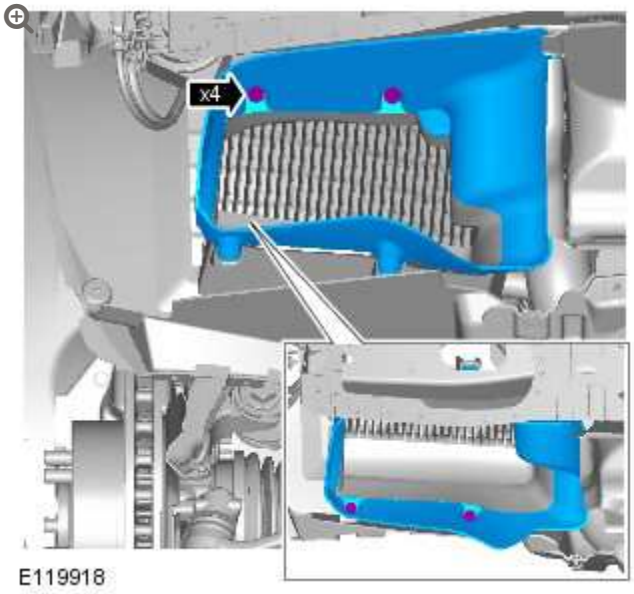

Torque: **2.5 Nm**

10.

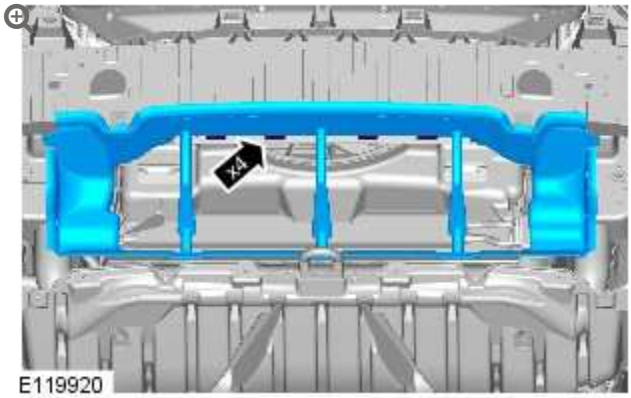

11.

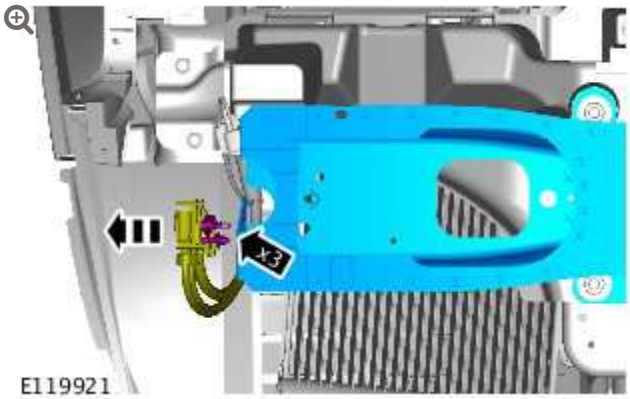

12.

WARNING:

Make sure that new nuts are installed.

NOTE:

With assistance remove the component.

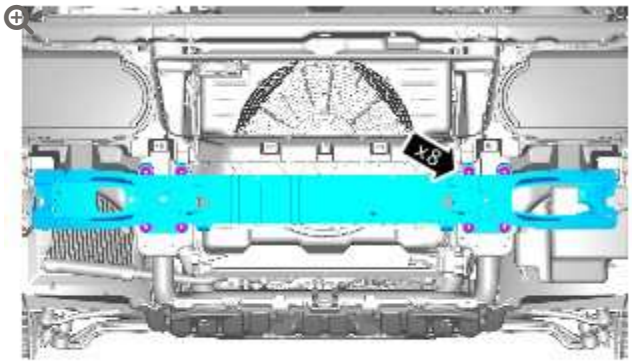

E119922

Torque: **45 Nm**

INSTALLATION

1. To install, reverse the removal procedure.

BUMPERS

FRONT BUMPER LOWER COVER (G1226542)

REMOVAL AND INSTALLATION

REMOVAL

NOTE:

Removal steps in this procedure may contain installation details.

1.

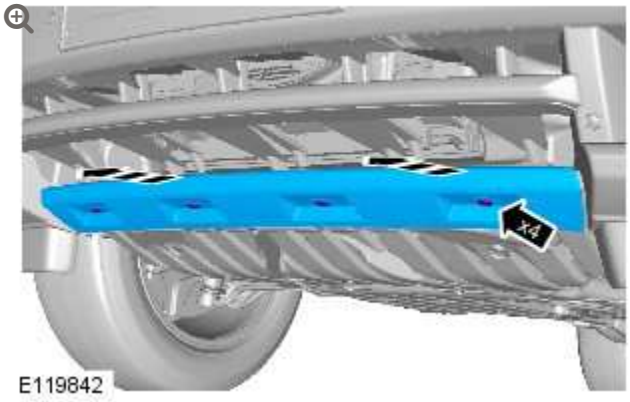

INSTALLATION

1. To install, reverse the removal procedure.

BUMPERS

REAR BUMPER (G927835)

REMOVAL AND INSTALLATION

76.22.52	BUMPER ARMATURE - REAR - RENEW	ALL DERIVATIVES	1.1	USED WITHINS	+

REMOVAL

1. Open the tailgate and fold back the loadspace cargo cover.

2. Remove the rear bumper cover assembly.
   For additional information, refer to: Rear Bumper Cover (501-19, Removal and Installation).

3. Raise and support the spare tire loadspace trim panel.

4. Remove the access panel from the LH and RH loadspace trim panels.

5.

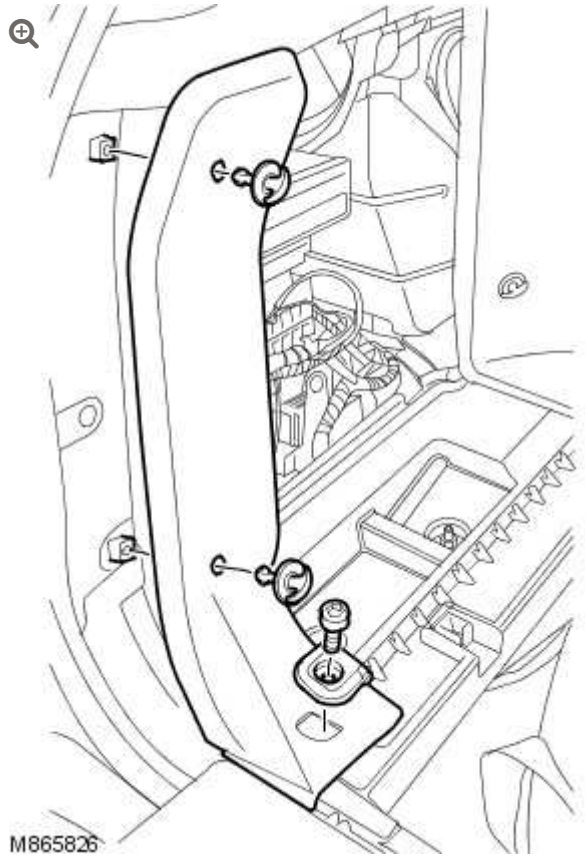

Remove the LH and RH luggage tie down rings.

6. Remove the LH and RH finisher trim panels.
   - Release the 4 turn fasteners.

7. Remove the loadspace trim panel, floor stowage compartment LH and RH access covers.

8. Remove the turn fastener and trim clip securing the LH and RH front loadspace trim panels.

9. Remove the warning triangle.

10. Release the clip and remove the wheel chock and tool roll.

11.

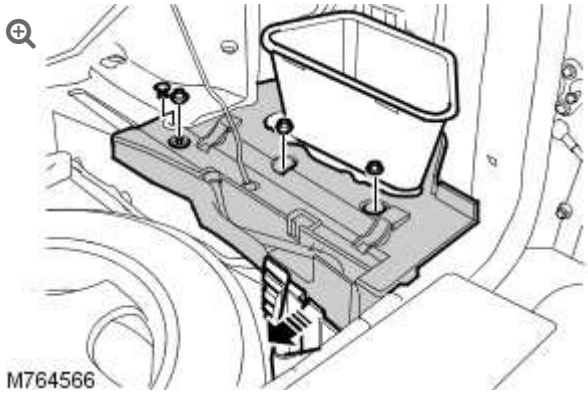

Remove the RH floor stowage compartment.

- Remove the RH floor stowage compartment plastic liner.
- Release the 2 clips.
- Remove the 3 nuts.

12.

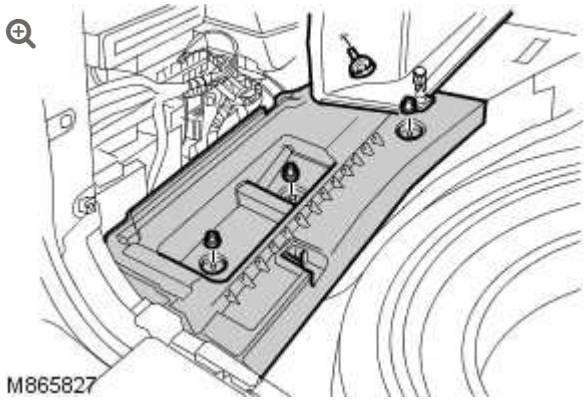

Remove the LH floor stowage compartment.

- Remove the 3 nuts.

13.

NOTE:

Do not disassemble further if the component is removed for access only.

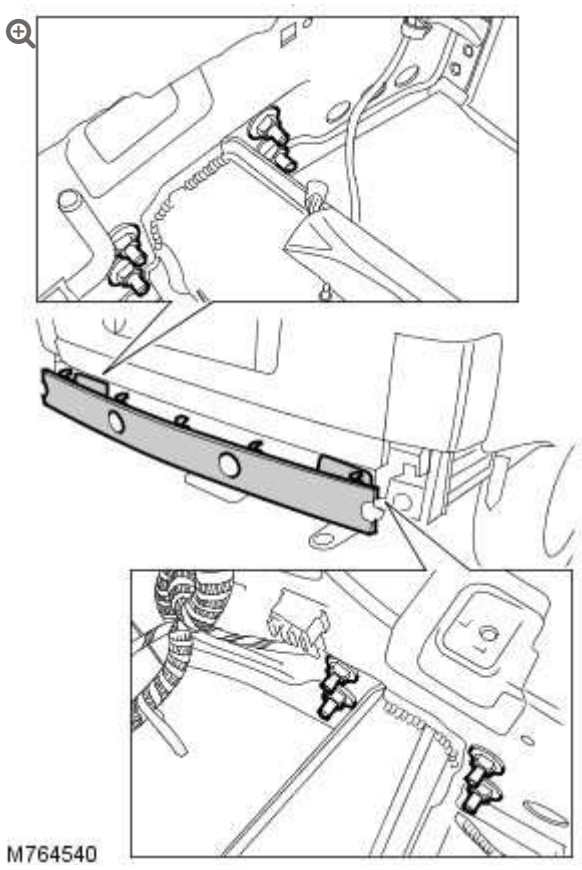

Remove the rear bumper.

- Remove the 8 nuts.

14. Release the 8 clips from the rear bumper.

INSTALLATION

1. Install the 8 clips to the rear bumper.

2. Install the rear bumper.

   - Tighten the nuts to 45 Nm (33 lb.ft).

3. Install the LH floor stowage compartment.

   - Install the nuts.

4. Install the RH floor stowage compartment.

- Install the nuts.
- Install the clips.
- Install the RH floor stowage compartment plastic liner.

5. Install the wheel chock and tool roll.
   - Secure with the clip.

6. Install the warning triangle.

7. Install the turn fastener and trim clip to the LH and RH front loadspace trim panels.

8. Install the loadspace trim panel, floor stowage compartment LH and RH access covers.

9. Install the LH and RH finisher trim panels.
   - Secure the turn fasteners.

10. Install the luggage tie down rings.
    - Tighten the bolts to 25 Nm (18 lb.ft).

11. Install the access panel to the LH and RH loadspace trim panels.

12. Lower and secure the spare tire loadspace trim panel.

13. Install the rear bumper cover assembly.
    For additional information, refer to: Rear Bumper Cover (501-19, Removal and Installation).

14. Close the tailgate and liftgate.
    -

Return the loadspace cargo cover to the original position.

BUMPERS

REAR BUMPER COVER

(G927836)

REMOVAL AND INSTALLATION

76.22.74	BUMPER VALANCE - REAR - RENEW	ALL DERIVATIVES	0.4	USED WITHINS	+

REMOVAL

1.

CAUTION:

Protect the paintwork during this operation.

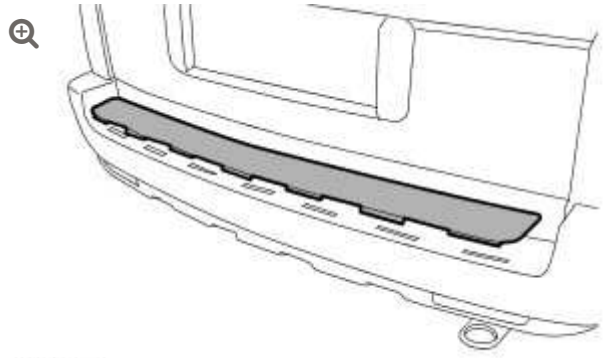

M764356

Remove the rear bumper cover trim panel.

- Release the 7 clips securing the rear edge of the rear bumper cover trim panel.
- Open the tailgate.
- Release the 12 clips securing the front edge of the rear bumper cover trim panel.

2.

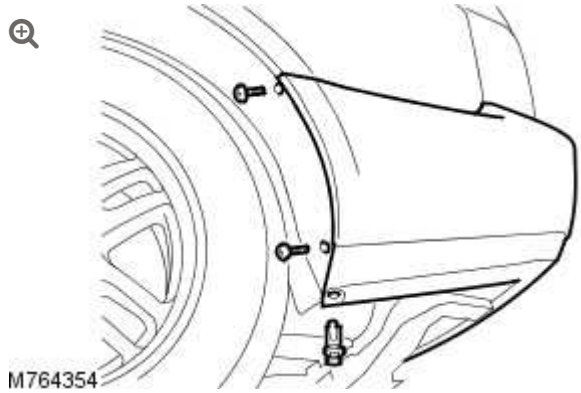

M764354

Release the rear fender splash shield from the rear bumper cover.

- Remove the 2 clips.
- Remove the 4 screws.

3.

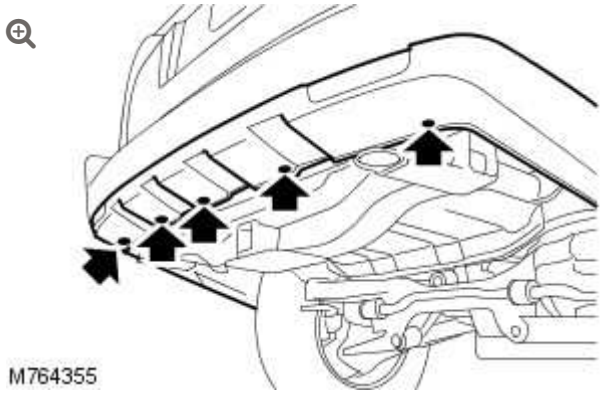

Release the rear bumper cover lower section.

- Remove the 5 screws.

4.

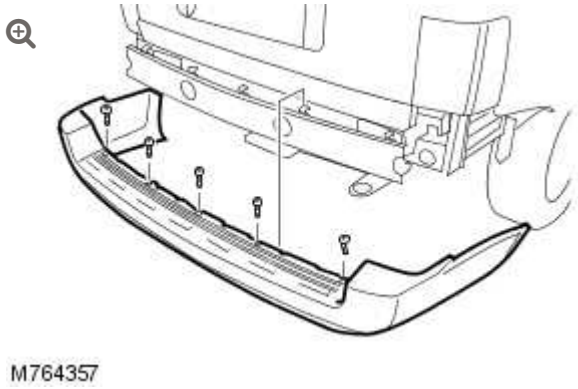

With assistance, remove the rear bumper cover.

- Remove the 5 screws.
- Release the 6 clips.
- Disconnect the 4 electrical connectors to the rear parking aid sensors.

INSTALLATION

1. With assistance, install the rear bumper cover.
   - Connect the electrical connectors to the rear parking aid sensors.
   - Install the screws.

2. Secure the rear bumper cover lower section.
    - Install the screws.

3. Secure the fender splash shield to the rear bumper cover.
    - Install the screws.
    - Install the clips.

4. Install the rear bumper cover trim panel.
    - Close the tailgate

SAFETY BELT SYSTEM

SPECIFICATIONS

Torque Specifications

DESCRIPTION	NM	LB-FT
Safety belt retractor bolt	31	23
Safety belt height adjuster nut	31	23
Front safety belt upper anchor bolt	50	37
Rear safety belt upper anchor bolt	31	23
Safety belt guide bolt	6	4.4
Front safety belt buckle bolt	40	30
Rear safety belt buckle bolt	25	18

BODY REPAIRS – GENERAL INFORMATION

DESCRIPTION AND OPERATION

Description

Structural adhesive

CAUTION:

When separating a joint treated with metal-to-metal adhesive, it is important to avoid distortion. Heat the joint gradually until the bond weakens sufficiently to allow panel separation. Failure to follow this instruction may result in damage to the vehicle.

NOTE:

When spot welding through metal-to-metal adhesive, take particular care to adjust the transformer setting to make sure the weld is reliable.

Metal-to-metal adhesive is applied to the critical joint areas during factory assembly. The material used is a high-temperature, heat cured, nitrile phenolic which serves to bond two metal surfaces and also to seal the joint against ingress of dust, moisture and fumes. This

material is not suitable for service use and, during repair, should be substituted by an approved Structural Adhesive.

Those joints which require the application of structural adhesive are detailed in the illustrations. Only the joints applicable to the service panels are included. Apply the structural adhesive where indicated or to the mating panel surface.

Expanding foam acoustic seals

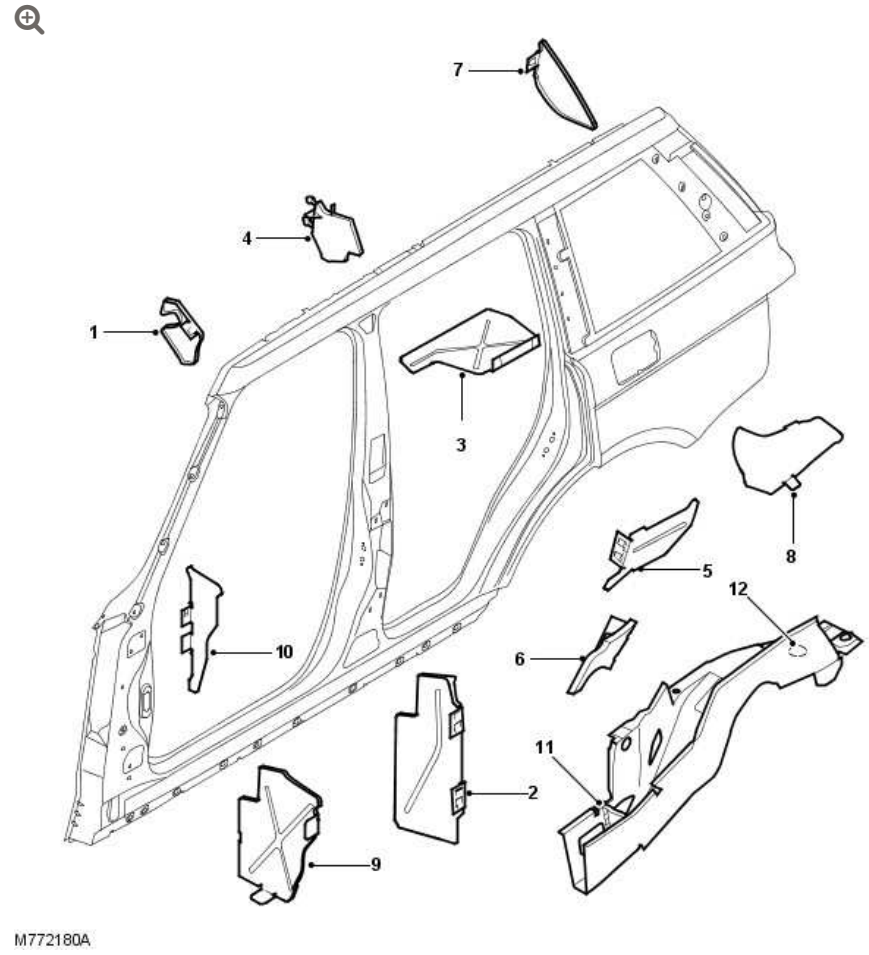

Expanding foam seals numbers 1 to 10 are fitted to various sections of the body side panel, body side closing and the body side panel inner. Seal numbers 11 and 12 are fitted inside the rear longitudinals.

Expanding foam acoustic seals are used in various closed sections of the body to improve vehicle refinement. The seals expand during the

factory paint process, locking them into position. The seals are used in various locations throughout the vehicle.

The main function of the seals is to insulate the cabin from noise, vibration and harshness (NVH).

A secondary function of the seals is to seal the internal sections of the vehicle against the ingress of dust, moisture and fumes.

Another advantage of the seals is that they marginally increase the overall stiffness of the body and its structural performance in case of a collision.

The seals are manufactured from an expandible synthetic rubber, `Betacore 4300`.

All the seals are fitted in the body-in-white areas, and after going through the paint baking process they expand up to eight times their original size.

Replacing seals

As paint oven temperatures used in a repair workshop are lower than those that are used during manufacture of the vehicle, a different process is required to replace the seals in service.

After a repair that involves replacement of a section containing expanded foam, the new section must be injected with an approved sound dampening foam. The sound dampening foam should be injected after paint refinishing and application of cavity wax. When injecting the foam, make sure the foam fills a complete cross section of the cavity.

Structural adhesive to the front side member joints

NOTE:

The front side member joints opposite to those shown are also treated. Apply 3 mm (0.118 inch) beads to all of the joints shown. Make sure all drain points are free from adhesive.

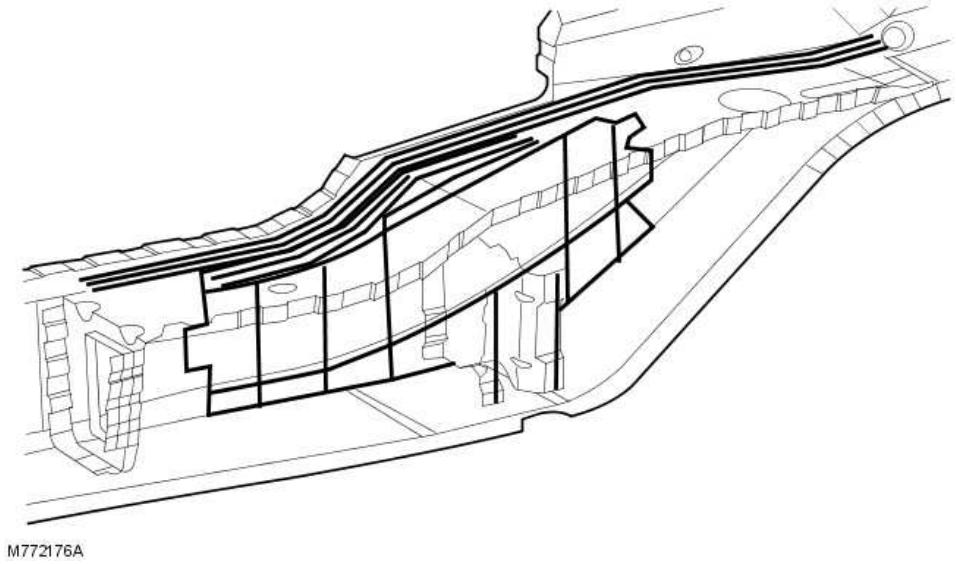

Structural adhesive to the front side member joints

NOTE:

The front side member joints opposite to those shown are also treated. Apply 3 mm (0.118 inch) beads to all of the joints shown. Make sure all drain points are free from adhesive.

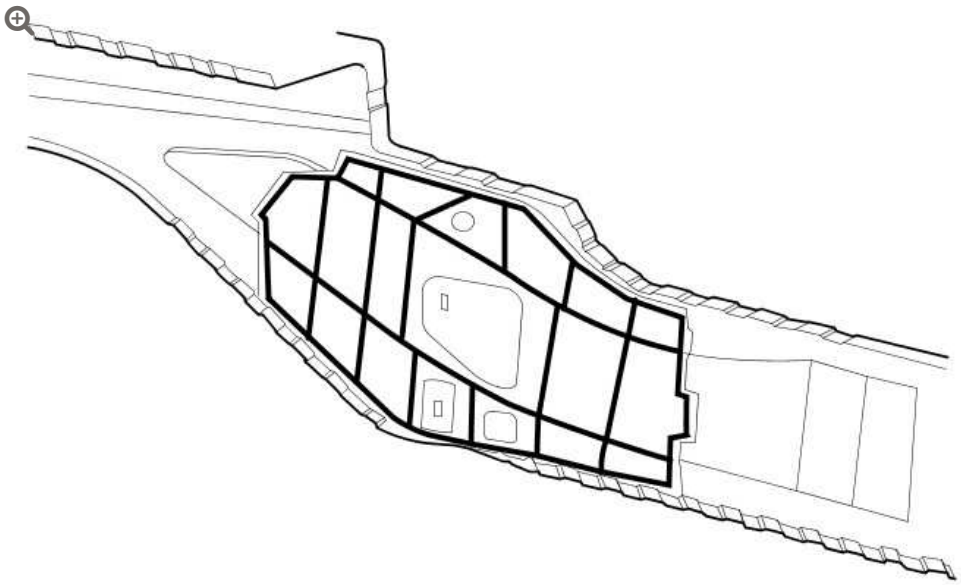

M772177A

Structural adhesive to the fender apron and side panel joints

NOTE:

The fender apron and side panel joints opposite to those shown are also treated. Apply 3 mm (0.118 inch) beads to all of the joints shown. Make sure all drain points are free from adhesive.

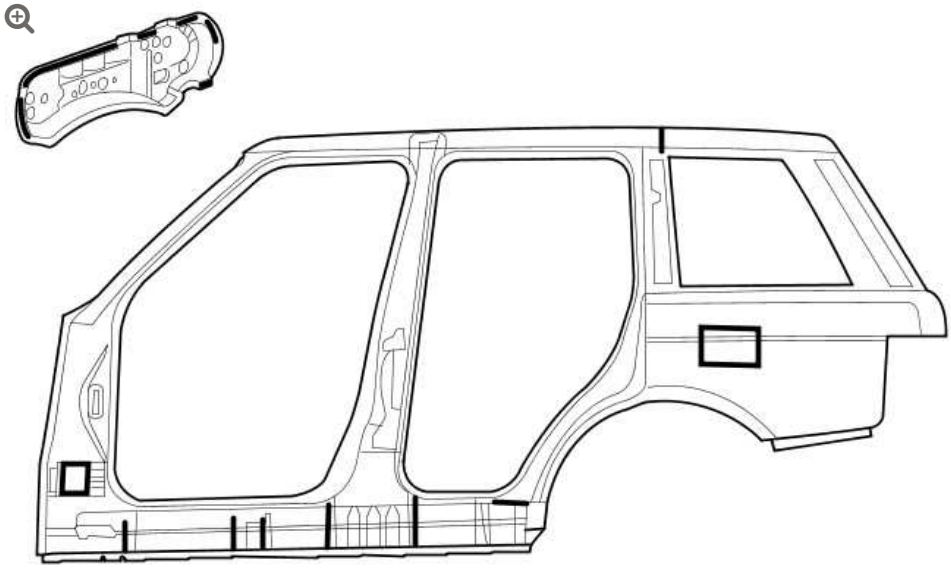

M772178A

Structural adhesive to the side panel inner joints

NOTE:

The side panel inner joints opposite to those shown are also treated. Apply 3 mm (0.118 inch) beads to all of the joints shown. Make sure all drain points are free from adhesive.

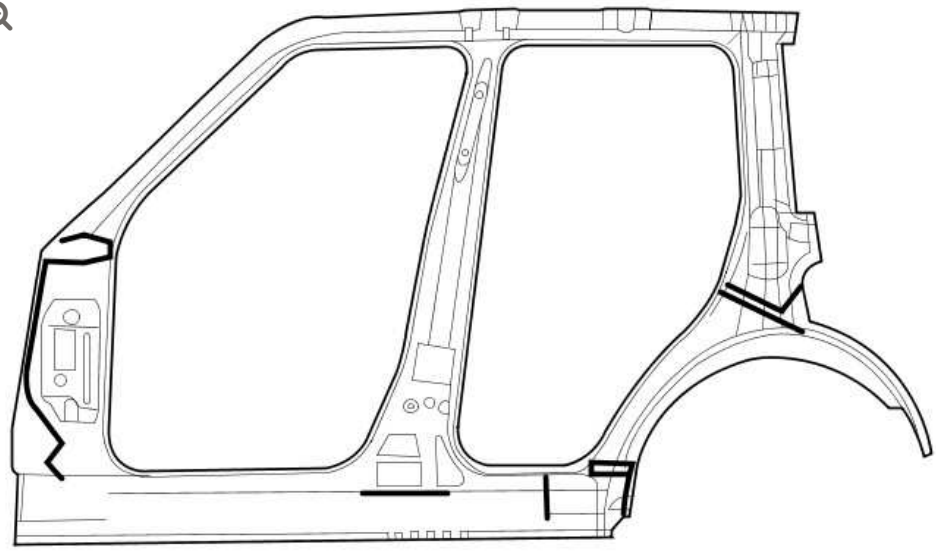

M772179

SAFETY BELT SYSTEM

FRONT SAFETY BELT BUCKLE (G875411)

REMOVAL AND INSTALLATION

76.73.30	STALK - FRONT SAFETY BELT - EACH - RENEW	ALL DERIVATIVES	0.5	USED WITHINS	+

REMOVAL

WARNINGS:

- Persons working on the supplemental restraint system (SRS) must be fully trained and have been issued with the safety guidelines.
- Allow a period of 10 minutes to elapse after disconnecting the battery before undertaking any work on the SRS.
- The SRS electrical connectors are unique. DO NOT force, or attempt to connect electrical connectors to the wrong sockets.
- The correct procedures must always be used when working on SRS components.
- It is imperative that before any work is undertaken on the SRS system, the appropriate information is read thoroughly.
- Always disconnect both battery cables before beginning work on the SRS system. Disconnect the ground cable first. Never reverse connect the battery.
- Take extra care when handling SRS components.

1. Disconnect the battery ground cable.
   For additional information, refer to: Specifications (414-00, Specifications).

2. Make the air bag supplemental restraint system (SRS) safe.
   For additional information, refer to: Standard Workshop Practices (100-00, Description and Operation).

3. Remove the front seat.
   For additional information, refer to: Front Seat (501-10, Removal and Installation).

4.

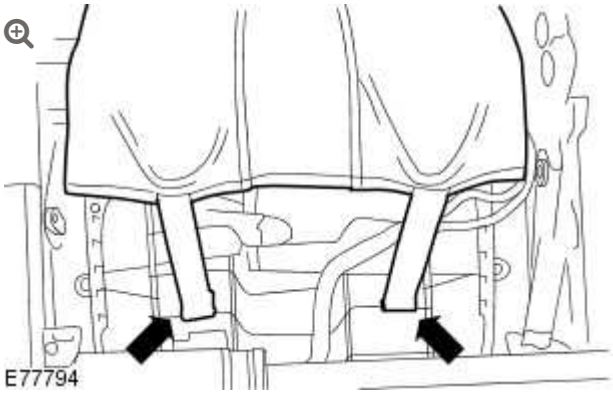

Release the 2 lower tension straps from the front seat base.

- Reposition the front seat backrest cover for access.

5.



Remove the front seat side trim panel support.

- Release the 2 clips.

6.

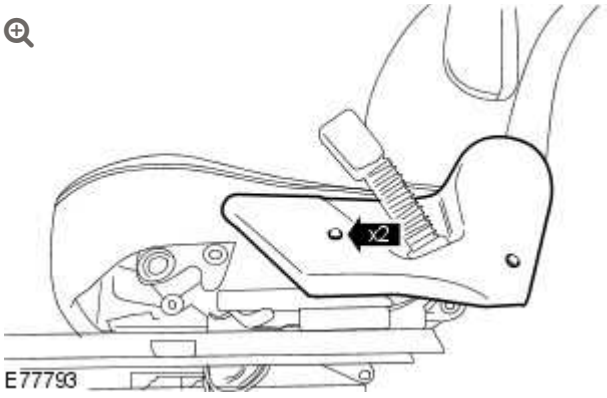

Remove the front seat backrest hinge cover.

- Remove the 2 screws.

- Release the clip.

7.

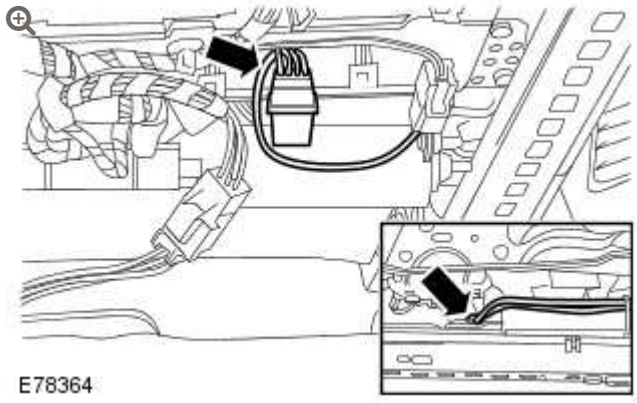

Disconnect the front safety belt buckle electrical connector.

- Release the wiring harness clip.

8.

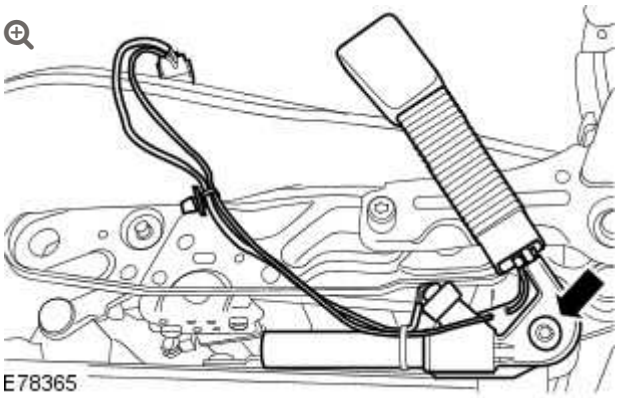

Remove the front safety belt buckle.

- Remove and discard the bolt.

INSTALLATION

1. Install the front safety belt buckle.
   - Install a new bolt and tighten to 40 Nm (30 lb.ft).
2. Connect the front safety belt buckle electrical connector.
   - Secure the wiring harness clip.

3. **WARNING:**

Make sure the front safety belt buckle wiring harness is correctly routed and secured in the position shown. Failure to follow this instruction may result in personal injury.

CAUTION:

Make sure the front safety belt buckle wiring harness is correctly routed and secured in the position shown. Failure to follow this instruction may result in damage to the vehicle.

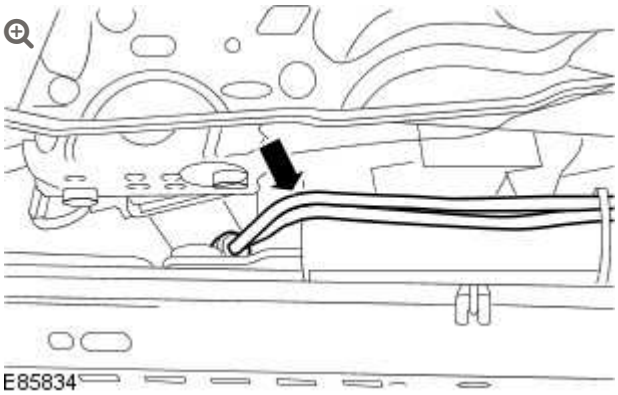

Reposition the front safety belt buckle wiring harness.

4. Install the front seat backrest hinge cover.
   - Secure the clip.
   - Install the 2 screws.

5. Install the front seat side trim panel support.
   - Secure the 2 clips.

6. Secure the 2 lower tension straps to the front seat base.
    - Reposition the front seat backrest cover.

7. Install the front seat.
   For additional information, refer to: Front Seat (501-10, Removal and Installation).

8. Connect the battery ground cable.
   For additional information, refer to: Specifications (414-00, Specifications).

SAFETY BELT SYSTEM

FRONT SAFETY BELT RETRACTOR (G914422)

REMOVAL AND INSTALLATION

76.73.13	SAFETY BELT - FRONT - EACH - RENEW	ALL DERIVATIVES	0.5	USED WITHINS	+

REMOVAL

1. Disconnect the battery ground cable.
   For additional information, refer to: Specifications (414-00, Specifications).

2. Make the air bag supplemental restraint system (SRS) safe.
   For additional information, refer to: Standard Workshop Practices (100-00, Description and Operation).

3. Remove the B-pillar trim panel.
   For additional information, refer to: B-Pillar Trim Panel (501-05, Removal and Installation).

4.

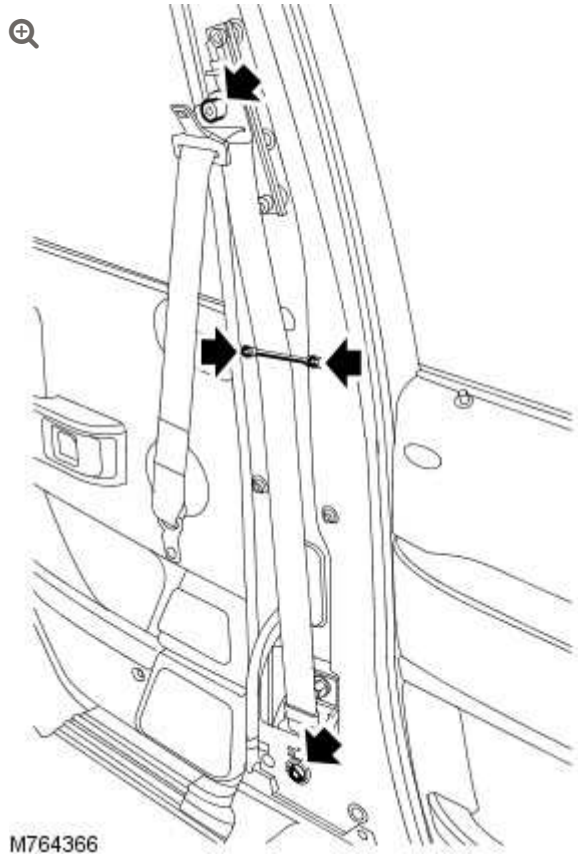

Remove the safety belt guide.

- Remove the 2 bolts.

5. Release the safety belt from the safety belt shoulder height adjuster.
   - Remove and discard the nut.

6. Remove the front safety belt.
   - Release the front safety belt retractor.
   - Remove and discard the bolt.

INSTALLATION

1. Install the front safety belt.
   - Secure the front safety belt retractor.

- Install the new bolt and tighten to 31 Nm (23 lb.ft).

2. Secure the safety belt to the safety belt shoulder height adjuster.
   - Install the new nut and tighten to 31 Nm (23 lb.ft.).

3. Install the safety belt guide.
   - Tighten the bolts to 6 Nm (4.4 lb.ft).

4. Install the B-pillar trim panel.
   For additional information, refer to: B-Pillar Trim Panel (501-05, Removal and Installation).

5. Connect the battery ground cable.
   For additional information, refer to: Specifications (414-00, Specifications).

SAFETY BELT SYSTEM

REAR CENTER SAFETY BELT BUCKLE (G915167)

REMOVAL AND INSTALLATION

REMOVAL

1. Fold the rear seat fully forwards.
   - Release the rear seat backrest catch.

2. 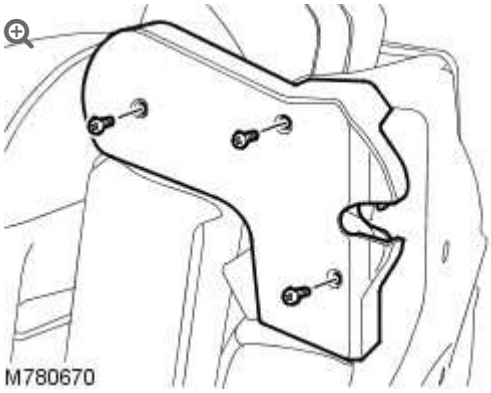

   Remove the rear seat backrest inner hinge cover.
   - Remove the 3 screws.

3.

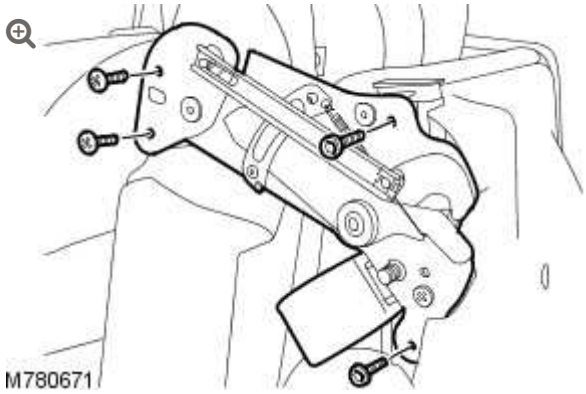

Remove the rear seat backrest inner hinge.

- Remove the 4 bolts.
- Discard the 2 lower bolts.

4.

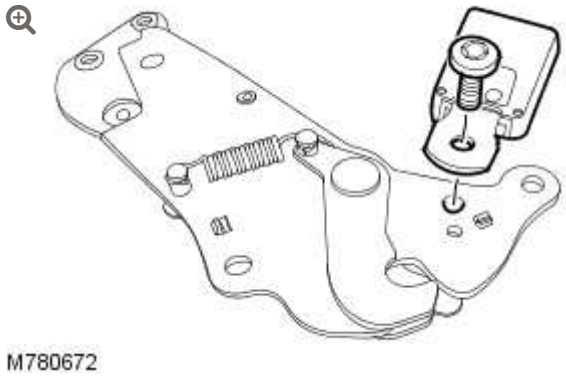

Remove the rear safety belt buckle.

- Remove and discard the bolt.

INSTALLATION

1. Install the rear safety belt buckle.
   - Install the new bolt and tighten to 25 Nm (18 lb.ft).
2. Install the rear seat backrest inner hinge.
   - Install the 2 upper bolts.
   - Install the 2 new lower bolts.

- Tighten the bolts to 25 Nm (18 lb.ft).

3. Install the rear seat backrest inner hinge cover.
   - Install the 3 screws.

4. Fold the rear seat fully rearwards.
   - Secure the rear seat backrest catch.

SAFETY BELT SYSTEM

REAR CENTER SAFETY BELT RETRACTOR (G915168)

REMOVAL AND INSTALLATION

76.73.20	SAFETY BELT - CENTRE - REAR - RENEW	ALL DERIVATIVES	1.3	USED WITHINS	+

REMOVAL

1. Remove the rear seat.
   For additional information, refer to: Rear Seat (501-10 Seating, Removal and Installation).

2. Remove the rear seat backrest cover.
   For additional information, refer to: Rear Seat Backrest Cover (501-10 Seating, Removal and Installation).

3.

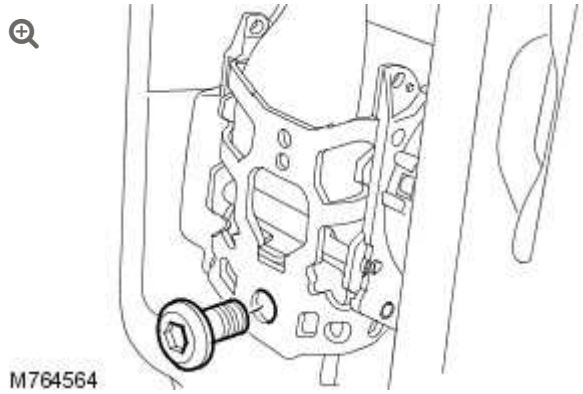

Remove the rear center safety belt retractor.

- Remove and discard the bolt.

INSTALLATION

1. Install the rear centre safety belt retractor.
   - Install the new bolt and tighten to 25 Nm (18 lb.ft).
2. Install the rear seat backrest cover.
   For additional information, refer to: Rear Seat Backrest Cover (501-10 Seating, Removal and Installation).
3. Install the rear seat.
   For additional information, refer to: Rear Seat (501-10 Seating, Removal and Installation).

SAFETY BELT SYSTEM

REAR SAFETY BELT BUCKLE (G913900)

REMOVAL AND INSTALLATION

76.73.30	STALK - FRONT SAFETY BELT - EACH - RENEW	ALL DERIVATIVES	0.5	USED WITHINS	+
76.73.32	STALK - REAR SAFETY BELT - LH/EACH - RENEW	ALL DERIVATIVES	0.4	USED WITHINS	+

REMOVAL

1. Remove the rear seat.
   For additional information, refer to: Rear Seat (501-10, Removal and Installation).

2.

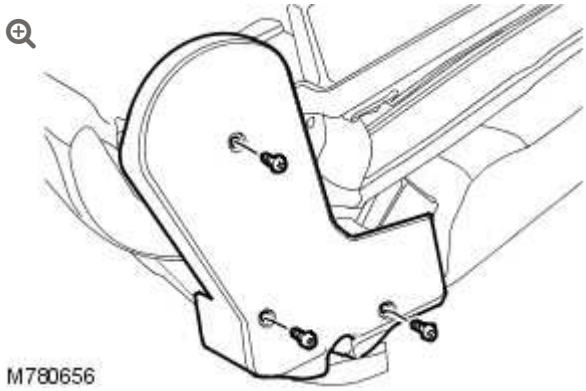

Remove the rear seat backrest inner hinge cover.

- Remove the 3 screws.

3.

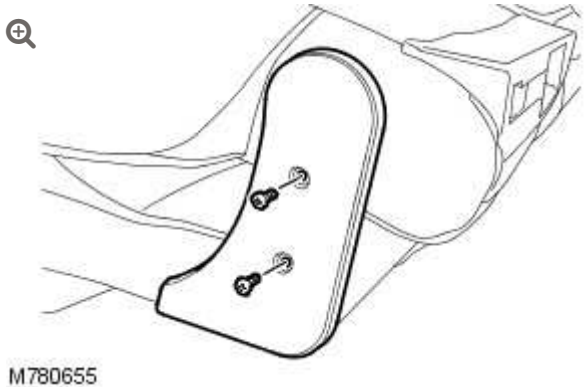

Remove the rear seat backrest outer hinge cover.

- Remove the 2 screws.

4.

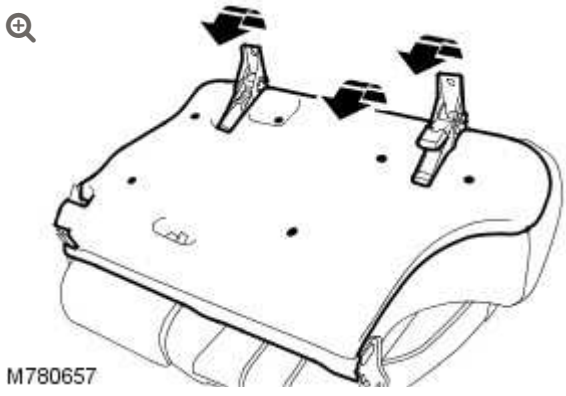

Remove the rear seat base lower trim panel.

- Remove the 6 clips.

- Reposition the rear seat hinge plates for access.

5. 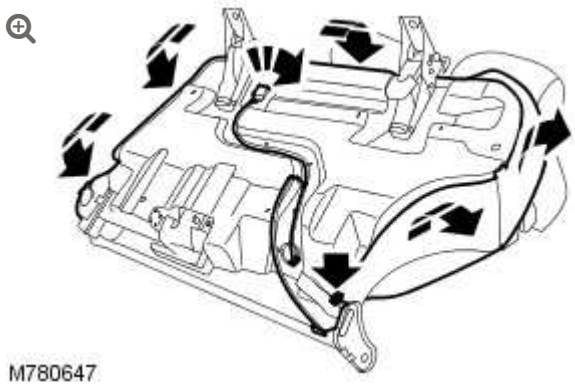

   Release the rear seat cushion cover from the rear seat base.

6. Reposition the rear seat cushion and seat cushion cover for access.

7. Remove the LH rear safety belt buckle.
   - Remove and discard the bolt.

INSTALLATION

1. Install the LH rear safety belt buckle.
   - Install the new bolt and tighten to 25 Nm (18 lb.ft).

2. Reposition the rear seat cushion and seat cushion cover for access.

3. Secure the rear seat cushion cover to the rear seat base.

4. Install the rear seat base lower trim panel.
   - Install the 6 clips.
   - Reposition the rear seat hinge plates for access.

5. Install the rear seat backrest outer hinge cover.
   - Remove the 2 screws.
   - Install the 2 screws.

6. Install the rear seat backrest inner hinge cover.
   - Install the 3 screws.

7. Install the rear seat.
   For additional information, refer to: Rear Seat (501-10, Removal and Installation).

SAFETY BELT SYSTEM

REAR SAFETY BELT RETRACTOR (G914138)

REMOVAL AND INSTALLATION

REMOVAL

1. Remove the C-pillar trim panel.
   For additional information, refer to: C-Pillar Upper Trim Panel (501-05, Removal and Installation).

2.

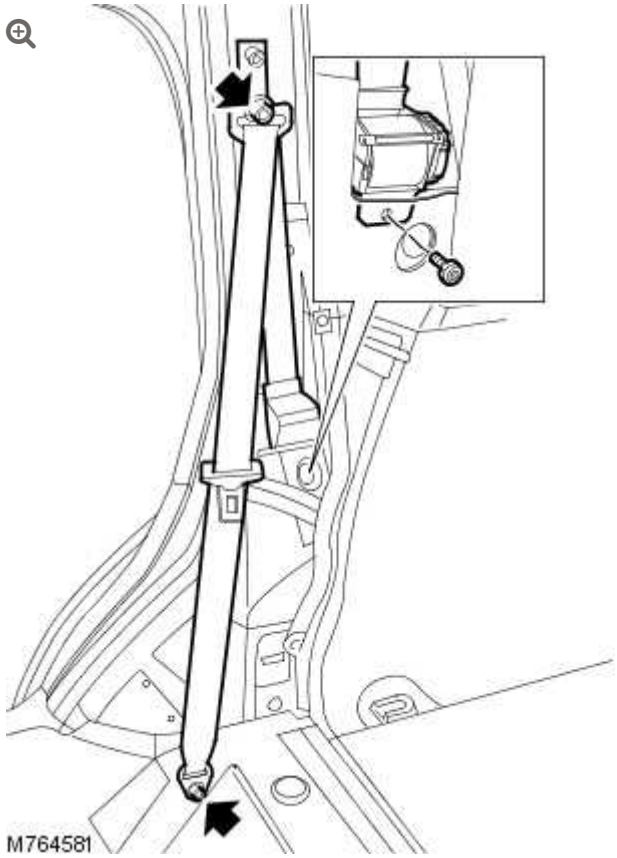

Release the safety belt upper anchor.

- Remove and discard the bolt.

3. Remove the rear safety belt.
   - Remove and discard the bolt.
   - Release the rear safety belt retractor.

INSTALLATION

1. Install the rear safety belt.
   - Secure the safety belt retractor.
   - Install the new bolt and tighten to 31 Nm (23 lb.ft).

2. Secure the safety belt upper anchor.
   - Install the new bolt and tighten to 31 Nm (23 lb.ft).

3. Install the C-Pillar trim panel.
   For additional information, refer to: C-Pillar Upper Trim Panel (501-05, Removal and Installation).

SAFETY BELT SYSTEM

DESCRIPTION AND OPERATION

COMPONENT LOCATIONS - FRONT SAFETY BELTS

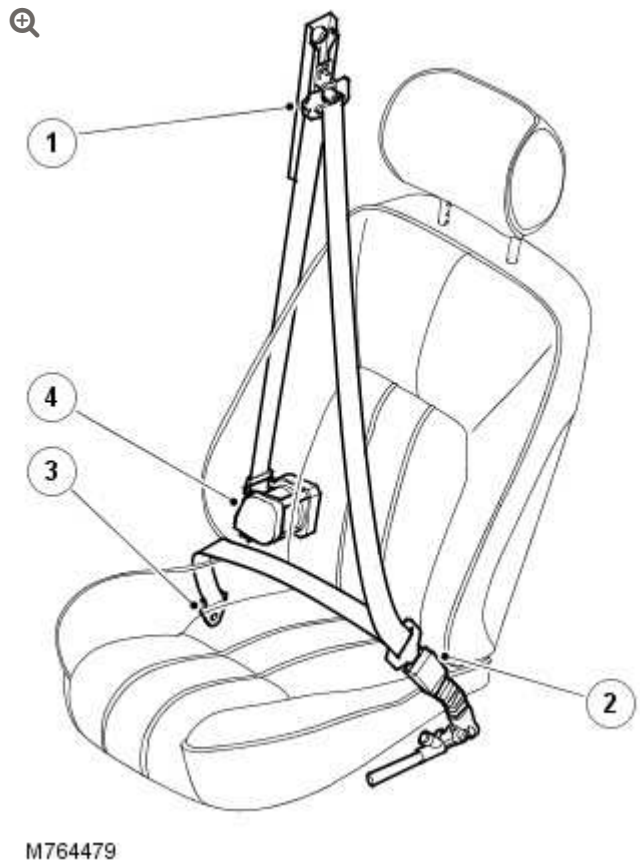

ITEM	DESCRIPTION
1	Height adjuster
2	Buckle
3	Anchor point
4	Retractor

ITEM	DESCRIPTION

COMPONENT LOCATIONS - REAR SAFETY BELTS

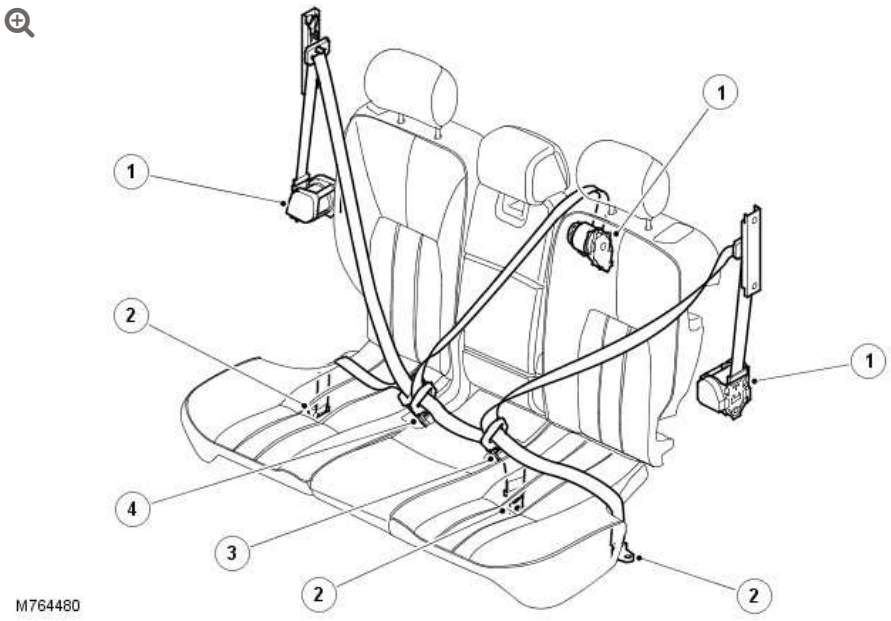

ITEM	DESCRIPTION
1	Retractor
2	Anchor point
3	left-hand (LH) outer belt buckle
4	right-hand (RH) outer and center belt buckles

GENERAL

Three point safety belts are installed at all seat positions. The front safety belts incorporate load limiters and have height adjusters on the B/C pillar. The rear outer safety belts have height adjusters on the D pillar.

On NAS vehicles, all passenger safety belts are the ALR (automatic locking retractor) type for use with child restraint systems.

A safety belt warning lamp and associated message are activated on the instrument cluster, by the lighting control module (LCM), at the beginning of each ignition cycle, as a reminder to fasten safety belts.

Child safety seat tether anchors are installed on the back of each rear outer seat.

SAFETY BELT SYSTEM

DIAGNOSIS AND TESTING

PRINCIPLES OF OPERATION

For a detailed description of the Safety Belt System, refer to the relevant Description and Operation section in the workshop manual. REFER to: Safety Belt System (501-20A Safety Belt System, Description and Operation).

SAFETY INFORMATION

WARNINGS:

- TO AVOID ACCIDENTAL DEPLOYMENT AND POSSIBLE PERSONAL INJURY, THE BACKUP POWER SUPPLY MUST BE DEPLETED BEFORE REPAIRING OR REPLACING ANY AIR BAG SUPPLEMENTAL RESTRAINT SYSTEM (SRS) COMPONENTS. TO DEPLETE THE BACKUP POWER SUPPLY ENERGY, DISCONNECT THE BATTERY GROUND CABLE AND WAIT ONE MINUTE. FAILURE TO FOLLOW THIS INSTRUCTION MAY RESULT IN PERSONAL INJURY.
- Do not use a multimeter to probe the restraints control module. It is possible for the power from the meter battery to trigger the activation of the airbags. Failure to follow this instruction may result in personal injury.

NOTES:

- It is advisable not to use a cellular phone or to have a cellular phone in close proximity when working on the restraints control module or associated systems.
- Given the legal implications of a restraints system failure, harness repairs to Air Bag module circuits are not acceptable. Where the text refers to "REPAIR the circuit", this will normally mean the replacement of a harness.

Power Supply Depletion

Before beginning any work on the SRS system or related components:

1. Set the ignition to off
2. Disconnect the battery leads, ground first

3. Wait 2 minutes for the power circuit to discharge

There are comprehensive instructions on the correct procedures for SRS system repairs, refer to the relevant section of the workshop manual.

INSPECTION AND VERIFICATION

CAUTION:

Diagnosis by substitution from a donor vehicle is **NOT** acceptable. Substitution of control modules does not guarantee confirmation of a fault, and may also cause additional faults in the vehicle being tested and/or the donor vehicle.

NOTES:

- If a control module or a component is suspect and the vehicle remains under manufacturer warranty, refer to the Warranty Policy and Procedures manual, or determine if any prior approval programme is in operation, prior to the installation of a new module/component.
- When performing voltage or resistance tests, always use a digital multimeter accurate to three decimal places, and with an up-to-date calibration certificate. When testing resistance always take the resistance of the digital multimeter leads into account.
- Check and rectify basic faults before beginning diagnostic routines involving pinpoint tests.

1. Verify the customer concern

2. Visually inspect for obvious signs of damage and system integrity

Visual Inspection

MECHANICAL	ELECTRICAL
▪ Check for the installation of non-standard accessories which may affect or obstruct the function of the seatbelt system ▪ Frayed or damaged webbing ▪ Missing or damaged button stop ▪ Pretensioner buckles/stalks	▪ Fuses ▪ Wiring harnesses and connectors ▪ Restraints control module ▪ Pretensioner(s)

3. If an obvious cause for an observed or reported concern is found, correct the cause (if possible) before proceeding to the next step

4. If the cause is not visually evident, verify the symptom and refer to the Symptom Chart, alternatively check for Diagnostic Trouble Codes (DTCs) and refer to the DTC Index

5. Check DDW for open campaigns. Refer to the corresponding bulletins and SSMs which may be valid for the specific customer complaint and carry out the recommendations as required

SYMPTOM CHART FOR SEATBELT ROWS 1, 2 AND 3

SYMPTOM	POSSIBLE CAUSES	ACTION
Seatbelt jammed - Webbing tight	▪ Backlock effect-in action (webbing retracted quickly and came to sudden stop) ▪ Seatbelt retractor not installed correctly	▪ GO to Pinpoint Test **A.** ▪ GO to Pinpoint Test **F.** ▪ GO to Pinpoint Test **H.** ▪ See the automatic locking retractor description below

SYMPTOM	POSSIBLE CAUSES	ACTION
	▪ Rear centre seatbelt only. Mini-button (webbing travel limit stop) missing and seat squab has been moved causing tight fit ▪ Automatic locking retractor activated (clicking, during retraction only)	
Seatbelt jammed - Webbing loose	▪ Seatbelt webbing trapped in seat ▪ Seatbelt retractor webbing guide loose ▪ Twist in webbing ▪ Interference in webbing routing ▪ D-loop not rotating correctly	▪ GO to Pinpoint Test **B.** ▪ GO to Pinpoint Test **C.** ▪ GO to Pinpoint Test **D.** ▪ GO to Pinpoint Test **E.** ▪ GO to Pinpoint Test **G.**
Seatbelt jammed - Intermittent	▪ Seatbelt retractor not installed correctly	▪ GO to Pinpoint Test **F.**
Seat squab will not fold/jammed	**NOTE:** Rear centre seatbelt only ▪ Mini-button (webbing travel limit stop) missing and seat squab has been moved causing excessive tension	▪ GO to Pinpoint Test **H.**
Seatbelt retraction slow	▪ Seatbelt retractor webbing guide loose ▪ Twist in seatbelt webbing ▪ Interference in webbing routing	▪ GO to Pinpoint Test **C.** ▪ GO to Pinpoint Test **D.** ▪ GO to Pinpoint Test **E.** ▪ GO to Pinpoint Test **F.**

SYMPTOM	POSSIBLE CAUSES	ACTION
	▪ Seatbelt retractor not installed correctly ▪ D-loop not rotating correctly ▪ Foreign object/debris	▪ GO to Pinpoint Test **G.** ▪ GO to Pinpoint Test **E.**
Seatbelt will not retract	▪ Seatbelt retractor webbing guide loose ▪ Twist in seatbelt webbing ▪ D-loop not rotating correctly ▪ Interference in webbing routing ▪ Foreign object/debris	▪ GO to Pinpoint Test **C.** ▪ GO to Pinpoint Test **D.** ▪ GO to Pinpoint Test **G.** ▪ GO to Pinpoint Test **E.** ▪ GO to Pinpoint Test **E.**
Seatbelt will not extract	▪ Backlock effect-in action (webbing retracted quickly and came to sudden stop) ▪ Seatbelt retractor not installed correctly ▪ Seatbelt retractor webbing guide loose ▪ Twist in seatbelt webbing ▪ D-loop not rotating correctly ▪ Interference in webbing routing ▪ Foreign object/debris ▪ Automatic locking retractor activated (clicking – during retraction only)	▪ GO to Pinpoint Test **A.** ▪ GO to Pinpoint Test **F.** ▪ GO to Pinpoint Test **C.** ▪ GO to Pinpoint Test **D.** ▪ GO to Pinpoint Test **G.** ▪ GO to Pinpoint Test **E.** ▪ GO to Pinpoint Test **E.** ▪ See the automatic locking retractor description below
Seatbelt noisy during operation	▪ Automatic locking retractor activated (clicking –during retraction only) ▪ Interference in webbing routing (rubbing)	▪ GO to Pinpoint Test **B.** ▪ GO to Pinpoint Test **E.**

SYMPTOM	POSSIBLE CAUSES	ACTION
Seatbelt buckle not latching / jammed	▪ Foreign object/debris	**CAUTION:** Do not insert any objects or tools into the buckle head ▪ GO to Pinpoint Test **I.**

INERTIA REEL SEATBELTS

The vehicle is equipped with (two row one), (three row two), and (two row three (seven seat versions only)) inertia reel seatbelts.

These seatbelts are dual sensitive, which means that they feature:

- Car sense system - A vehicle motion sensor, which locks the seatbelt webbing under braking, cornering, on steep hills and in adverse camber conditions, when parked on a steep incline or driveway or with two wheels on a high curb
- Web sense system - A webbing motion sensor, which locks when the seatbelt webbing is extracted suddenly

SEATBELT LOCKING TEST

With the vehicle stationary and on level ground take firm hold of the seatbelt webbing (on the tongue side of the upper seatbelt anchor) and withdraw sharply, **the retractor should lock**. Preventing further webbing release **(repeat this test 3 times)**. Any seatbelt retractor which fails to lock **must not be used** and a **new seatbelt must be installed**.

AUTOMATIC LOCKING RETRACTORS

Some seatbelts feature an automatic locking retractor function. These can be used to secure a child seat or heavy load.

VEHICLE	SEAT POSITION	MARKET	AUTOMATIC LOCKING RETRACTOR INSTALLED	FROM MODEL YEAR
Freelander (L359)	Driver	All	No	2007
Freelander (L359)	Passenger	ROW	No	2007
Freelander (L359)	Passenger	US	Yes	2007
Freelander (L359)	Row 2	ROW	No	2007
Freelander (L359)	Row 2	US	Yes	2007
Discovery Sport (L550)	Driver	All	No	2015
Discovery Sport (L550)	Passenger	ROW	No	2015
Discovery Sport (L550)	Passenger	US	Yes	2015
Discovery Sport (L550)	Row 2	ROW	No	2015
Discovery Sport (L550)	Row 2	US	Yes	2015
Discovery Sport (L550)	Row 3	ROW	No	2015
Discovery Sport (L550)	Row 3	US	Yes	2015
Discovery 3/4 (L319)	Driver	All	No	2005
Discovery 3/4 (L319)	Passenger	ROW	No	2005

VEHICLE	SEAT POSITION	MARKET	AUTOMATIC LOCKING RETRACTOR INSTALLED	FROM MODEL YEAR
Discovery 3/4 (L319)	Passenger	US	Yes	2005
Discovery 3/4 (L319)	Row 2	All	Yes	2005
Discovery 3/4 (L319)	Row 3	All	Yes	2005
Defender (L316)	All	All	No	2007
Range Rover Evoque (L538)	Driver	All	No	2012
Range Rover Evoque (L538)	Passenger	ROW	No	2012
Range Rover Evoque (L538)	Passenger	US	Yes	2012
Range Rover Evoque (L538)	Row 2	ROW	No	2012
Range Rover Evoque (L538)	Row 2	US	Yes	2012
Range Rover (L322)	Driver	All	No	2002
Range Rover (L322)	Passenger	ROW	No	2002
Range Rover (L322)	Passenger	US	Yes	2002
Range Rover (L322)	Row 2	ROW	No	2002
Range Rover (L322)	Row 2	US	Yes	2002
Range Rover (L405)	Driver	All	No	2013
Range Rover (L405)	Passenger	ROW	No	2013

VEHICLE	SEAT POSITION	MARKET	AUTOMATIC LOCKING RETRACTOR INSTALLED	FROM MODEL YEAR
Range Rover (L405)	Passenger	US	Yes	2013
Range Rover (L405)	Row 2	ROW	No	2013
Range Rover (L405)	Row 2	US	Yes	2013
Range Rover (L405)	Row 3	All	No	2013
Range Rover Sport (L320)	Driver	All	No	2005
Range Rover Sport (L320)	Passenger	ROW	No	2005
Range Rover Sport (L320)	Passenger	US	Yes	2005
Range Rover Sport (L320)	Row 2	All	Yes	2006
Range Rover Sport (L494)	Driver	All	No	2014
Range Rover Sport (L494)	Passenger	ROW	No	2014
Range Rover Sport (L494)	Passenger	US	Yes	2014
Range Rover Sport (L494)	Row 2	ROW	No	2014
Range Rover Sport (L494)	Row 2	US	Yes	2014
Range Rover Sport (L494)	Row 3	ROW	No	2014
Range Rover Sport (L494)	Row 3	US	Yes	2014

Automatic Locking Retractor Activation and Deactivation

ACTIVATION	DEACTIVATION
NOTE: When automatic locking retractor is activated, no further webbing can be drawn from the seatbelt retractor, prior to disengagement of the automatic locking. This can be mistaken as a jammed seatbelt retractor Activated by total extraction of the webbing	Automatic locking retractor is deactivated by allowing the webbing to retract until the clicking stops (close to park position)
When activated the automatic locking retractor is identified by a clicking noise during webbing retraction	When deactivated the automatic locking retractor seatbelt changes state, from a **static** seatbelt to an **automatic** seatbelt

DIAGNOSTIC GUIDE INERTIA REEL SEATBELTS

PINPOINT TEST A : BACKLOCK	
TEST CONDITIONS	DETAILS/RESULTS/ACTIONS
A1: BACKLOCK	
	1 Visually inspect the condition of the suspect seatbelt
	2 Draw a maximum of 20mm of the webbing from the seatbelt retractor with moderate force. Then release the webbing
	3 Check for correct operation twice
	Does the webbing move freely then retract correctly? **Yes** No further action required **No** For first row seatbelt GO to Pinpoint Test **C.** For second and third row seatbelts GO to Pinpoint Test **B.**

PINPOINT TEST B : WEBBING - TRAPPED IN SEAT	
TEST CONDITIONS	DETAILS/RESULTS/ACTIONS
B1: WEBBING - TRAPPED IN SEAT	
	1 Visually inspect the condition of the suspect seatbelt
	2 Lift the seat base or release the seat backrest as required
	3 Free the trapped webbing, allow the webbing to retract **Note: If the automatic locking retractor is activated, allow the webbing to retract until the clicking stops**
	4 Check for correct operation **twice**
	Does the webbing move freely then retract correctly? **Yes** No further action required **No** GO to Pinpoint Test **C.**

PINPOINT TEST C : SEATBELT RETRACTOR - WEBBING GUIDE LOOSE	
TEST CONDITIONS	DETAILS/RESULTS/ACTIONS
C1: SEATBELT RETRACTOR - WEBBING GUIDE LOOSE	
	1 Refer to 501-20 removal and installation section of the workshop manual, remove any trim panels required to expose the D loop (anchor point) and seatbelt retractor
	2 Check the webbing is not trapped or twisted and is centrally located on the seatbelt retractor spindle
	3 Attempt to withdraw the webbing from the seatbelt retractor **NOTE: If the seatbelt webbing is jammed, the automatic locking retractor could be engaged**
	4 To release the automatic locking retractor, manually wind the webbing onto the spindle until the automatic locking retractor deactivates (clicking stops)
	5 Fully extract webbing
	6 Confirm webbing guide location is correct , Confirm the fixing lugs are correctly located in the retractor frame
	7 Allow webbing to retract
	8 Check for correct operation **twice**

PINPOINT TEST C : SEATBELT RETRACTOR - WEBBING GUIDE LOOSE	
	Does the webbing move freely then retract correctly? **Yes** Refer to the 501-20 removal and installation section of the workshop manual, reinstall any trim panels, ensure there are no obstructions and the webbing does not catch or rub. No further action required **No** GO to Pinpoint Test **D.**

PINPOINT TEST D : TWIST IN WEBBING	
TEST CONDITIONS	DETAILS/RESULTS/ACTIONS
D1: TWIST IN WEBBING	
	1 Refer to section 501-20 removal and installation section of the workshop manual, remove any trim panels required to expose the D loop (anchor point)
	2 Twist the webbing back the correct way in the loop
	3 Pass the twist through the pillar loop or escutcheon as required
	4 Check for correct operation **twice**
	Does the webbing move freely then retract correctly? **Yes** Refer to the 501-20 removal and installation section of the workshop manual, reinstall any trim panels, ensure there are no obstructions and the webbing does not catch or rub. No further action required **No** GO to Pinpoint Test **E.**

PINPOINT TEST E : INTERFERENCE - WEBBING ROUTING	
TEST CONDITIONS	DETAILS/RESULTS/ACTIONS
E1: INTERFERENCE - WEBBING ROUTING	
	1 Refer to the 501-20 removal and installation section of the workshop manual, remove any trim panels required to expose the D loop (anchor point)
	2 Remove obstructions and foreign objects ensure the webbing does not catch or rub

PINPOINT TEST E : INTERFERENCE - WEBBING ROUTING	
	3 Confirm the seatbelt does not contact the wiring harness
	4 Check for correct operation **twice**
	Does the webbing move freely then retract correctly? **Yes** Refer to the 501-20 removal and installation section of the workshop manual, reinstall any trim panels, ensure there are no obstructions and the webbing does not catch or rub. No further action required **No** GO to Pinpoint Test **F.**

PINPOINT TEST F : SEATBELT RETRACTOR - INCORRECT INSTALLATION	
TEST CONDITIONS	DETAILS/RESULTS/ACTIONS
F1: SEATBELT RETRACTOR - INCORRECT INSTALLATION	
	1 Refer to the 501-20 removal and installation section of the workshop manual, remove any trim panels required to expose the D loop (anchor point) and the seatbelt retractor
	2 Refer to the 501-20 removal and installation section of the workshop manual, correctly reinstall the seatbelt retractor ensure that the locating "T bar" and "anti rotation pins" are correctly located
	3 Check for correct operation **twice**
	Does the webbing move freely then retract correctly? **Yes** Refer to the 501-20 removal and installation section of the workshop manual, reinstall any trim panels, ensure there are no obstructions and the webbing does not catch or rub. No further action required **No** Replace as required. Refer to the warranty policy and procedures manual, or determine if any prior approval programme is in operation, prior to the installation of a new module/component

PINPOINT TEST G : D-LOOP NOT ROTATING CORRECTLY	
TEST CONDITIONS	DETAILS/RESULTS/ACTIONS

PINPOINT TEST G : D-LOOP NOT ROTATING CORRECTLY	
G1: D-LOOP NOT ROTATING CORRECTLY	
	1 Refer to the 501-20 removal and installation section of the workshop manual, remove any trim panels required to expose the D loop (anchor point) and the seatbelt retractor
	2 Ensure there are no obstructions and the webbing does not catch or rub, the D loop (anchor point) rotates correctly and if installed the confirm the height adjuster operates correctly
	3 Check for correct operation **twice**
	Does the webbing move freely then retract correctly? **Yes** Refer to the 501-20 removal and installation section of the workshop manual, reinstall any trim panels, ensure there are no obstructions and the webbing does not catch or rub. No further action required **No** Replace as required. Refer to the warranty policy and procedures manual, or determine if any prior approval programme is in operation, prior to the installation of a new module/component

NOTE:

This test applies to the rear centre seatbelt retractor installed in the **seat back**

PINPOINT TEST H : MINI BUTTON - MISSING/DAMAGED	
TEST CONDITIONS	DETAILS/RESULTS/ACTIONS
H1: MINI BUTTON - MISSING/DAMAGED	
	1 Refer to the 501-20 removal and installation section of the workshop manual, remove the seat cushion and the plastic escutcheon at the top of the seat back (where the webbing exits to expose the lower anchor fixing point of the center seatbelt)
	2 Remove the lower anchorage of the seatbelt

PINPOINT TEST H : MINI BUTTON - MISSING/DAMAGED	
	3 With the seat back correctly latched, allow up to 20mm webbing to retract, then extract the webbing
	Is the mini-button (webbing travel limit stop) correctly installed to the webbing and in good condition? **Yes** Feed the mini-button back through the plastic escutcheon if required. Correctly reinstall the escutcheon to the seat back, extract the webbing then allow to retract, ensure the mini-button comes to rest outside the escutcheon stop **No** Replace as required. Refer to the warranty policy and procedures manual, or determine if any prior approval programme is in operation, prior to the installation of a new module/component

CAUTION:

Do not insert any objects or tools into the buckle head

PINPOINT TEST I : SEATBELT BUCKLE - NOT LATCHING/JAMMED	
TEST CONDITIONS	DETAILS/RESULTS/ACTIONS
I1: SEATBELT BUCKLE - NOT LATCHING/JAMMED	
	1 Visually inspect the buckle head for evidence of damage. If damaged replace as required
	2 Depress the buckle release (red button) and **(Using a torch)** carry out visual inspection for any evidence of debris/material or foreign objects in the buckle head
	3 If required remove the pretensioner from the vehicle. Remove the seat. Remove the pretensioner from the seat frame
	4 **Do not insert any objects or tools buckle head** With the buckle removed invert and attempt to shake out any debris
	5 Attempt to latch the tongue in the buckle
	Does the seatbelt buckle operate correctly **Yes** Reinstall any components, no further action required

PINPOINT TEST I : SEATBELT BUCKLE - NOT LATCHING/JAMMED	
	No Replace the pretensioner, Refer to section 501 20

SUPPLEMENTAL RESTRAINT SYSTEM

SPECIFICATIONS

Torque Specifications

DESCRIPTION	NM	LB-FT
Column switchgear and clockspring housing to steering column screws	6	4
* Passenger air bag to in-vehicle crossbeam bolts	19	14
* Passenger air bag to instrument panel upper section nuts	7	5
* Driver lower air bag to driver lower air bag trim panel nuts	7	5
* Front seat side air bag module nut	7	5
* Side air curtain module screw	7	5
* B-pillar side impact sensor bracket bolts	8	6
* Side air bag module bolts	9	7
* Front side air curtain module screw	10	7
* Front side air curtain module to the A-pillar screws	10	7

*** Indicates a new bolt, nut or screw must be installed.**

SUPPLEMENTAL RESTRAINT SYSTEM

B-PILLAR SIDE IMPACT SENSOR (G928275)

REMOVAL AND INSTALLATION

REMOVAL

WARNINGS:

- Persons working on the supplemental restraint system (SRS) must be fully trained and have been issued with the safety guidelines.
- Allow a period of 10 minutes to elapse after disconnecting the battery before undertaking any work on the SRS.
- The SRS electrical connectors are unique. DO NOT force, or attempt to connect electrical connectors to the wrong sockets.
- The correct procedures must always be used when working on SRS components.
- It is imperative that before any work is undertaken on the SRS system, the appropriate information is read thoroughly.
- Always disconnect both battery cables before beginning work on the SRS system. Disconnect the ground cable first. Never reverse connect the battery.
- Take extra care when handling SRS components.

1. Disconnect the battery ground cable.
   For additional information, refer to: Specifications (414-00, Specifications).

2. Make the air bag supplemental restraint system (SRS) safe.
   For additional information, refer to: Standard Workshop Practices (100-00, Description and Operation).

3. Remove the B-pillar trim panel.
   For additional information, refer to: B-Pillar Trim Panel (501-05, Removal and Installation).

4. Remove the front scuff plate trim panel.
   For additional information, refer to: Front Scuff Plate Trim Panel (501-05, Removal and Installation).

5. Remove the rear scuff plate trim panel.
   For additional information, refer to: Rear Scuff Plate Trim Panel (501-05, Removal and Installation).

6. 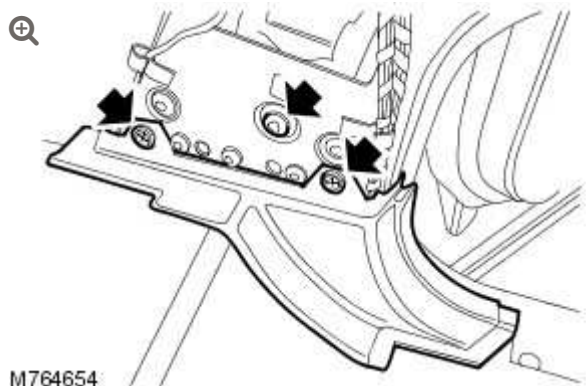

   Release the front safety belt retractor.

   - Remove and discard the bolt.

7. Remove the B-pillar floor covering trim panel.

   - Remove the 2 clips.

8. 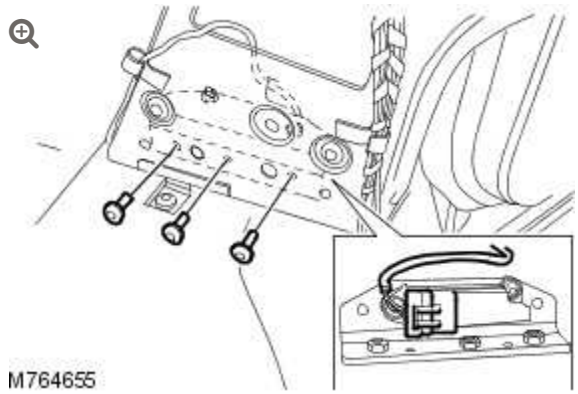

   Release the B-pillar side impact sensor bracket.

   - Remove and discard the 3 bolts.

9. Disconnect the B-pillar side impact sensor electrical connector.
    - Release the 2 wiring harness clips.

10. Remove the B-pillar side impact sensor and B-pillar side impact sensor bracket.

INSTALLATION

1. Install the B-pillar side impact sensor and B-pillar side impact sensor bracket.

2. Connect the B-pillar side impact sensor electrical connector.
    - Secure the 2 wiring harness clips.

3. Secure the B-pillar side impact sensor bracket.
    - Tighten the 3 new bolts to 8 Nm (6 lb.ft).

4. Install the B-pillar floor covering trim panel.
    - Install the 2 clips.

5. Secure the front safety belt retractor.
    - Install the new bolt and tighten to 31 Nm (23 lb.ft).

6. Install the rear scuff plate trim panel.
   For additional information, refer to: Rear Scuff Plate Trim Panel (501-05, Removal and Installation).

7. Install the front scuff plate trim panel.
   For additional information, refer to: Front Scuff Plate Trim Panel (501-05, Removal and Installation).

8. Install the B-pillar trim panel.
   For additional information, refer to: B-Pillar Trim Panel (501-05, Removal and Installation).

9. Connect the battery ground lead.
   For additional information, refer to: Specifications (414-00, Specifications).

SUPPLEMENTAL RESTRAINT SYSTEM

CLOCKSPRING (G1239689)

REMOVAL AND INSTALLATION

76.74.20	CLOCKSPRING - (S.R.S) AIR BAG SYSTEM - RENEW	ALL DERIVATIVES	0.4	USED WITHINS	+

REMOVAL

WARNINGS:

- Persons working on the supplemental restraint system (SRS) must be fully trained and have been issued with the safety guidelines.
- It is imperative that before any work is undertaken on the SRS system, the appropriate information is read thoroughly.
- The correct procedures must always be used when working on SRS components.
- Always disconnect both battery cables before beginning work on the SRS system. Disconnect the ground cable first. Never reverse connect the battery.
- Allow a period of 10 minutes to elapse after disconnecting the battery before undertaking any work on the SRS.
- The SRS electrical connectors are unique. DO NOT force, or attempt to connect electrical connectors to the wrong sockets.
- Do not probe supplemental restraint system (SRS) electrical connectors.
- Take extra care when handling supplemental restraint system (SRS) components.

CAUTION:

Do not dismantle the clockspring, it has no serviceable parts and must be replaced as a complete assembly.

NOTE:

If the SRS component is to be replaced, the bar code of the new unit must be recorded.

1. Make the air bag supplemental restraint system (SRS) safe.
   For additional information, refer to: Standard Workshop Practices (100-00, Description and Operation).

2. Fully extend the steering column for access.

3. Disconnect the battery ground cable.
   For additional information, refer to: Specifications (414-00, Specifications).

4. Remove the steering wheel.
   For additional information, refer to: Steering Wheel (211-04, Removal and Installation).

5. Release the steering column extension gaiter.
   - Release the 6 clips.

6. 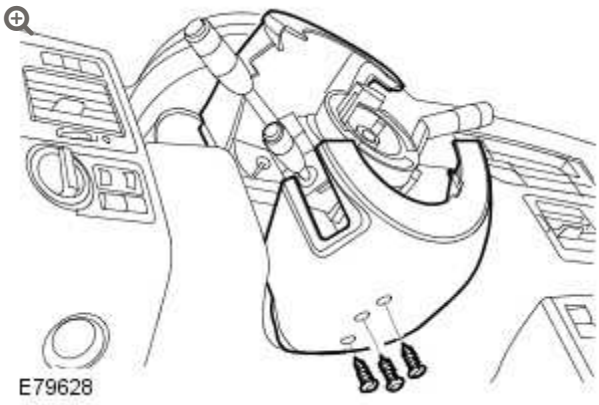

   Remove the steering column lower shroud.
   - Remove the 3 screws.

7. Remove the steering column upper shroud.

8. 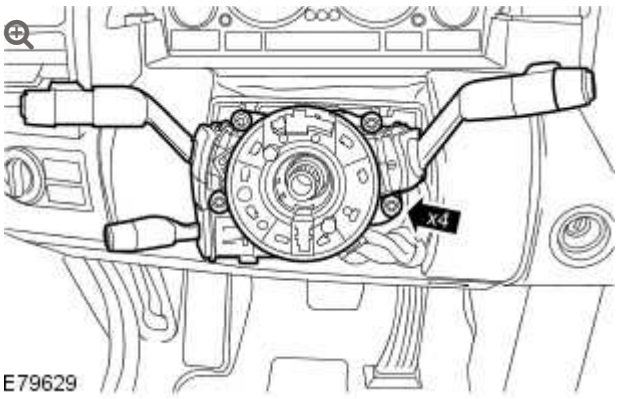

Release the clockspring.

- Remove the 4 screws.

9. **CAUTION:**

Do not dismantle the clockspring, it has no serviceable parts and must be replaced as a complete assembly.

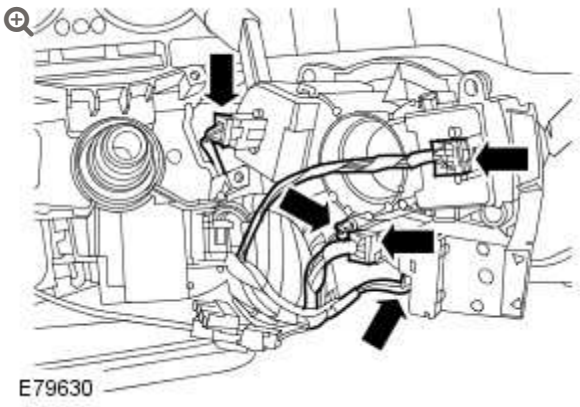

Remove the clockspring.

- Disconnect the 5 electrical connectors.
- Cut the cable tie.

10.

NOTE:

Do not disassemble further if the component is removed for access only.

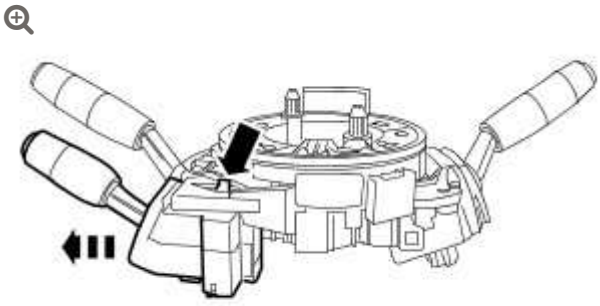

E 79631

Remove the steering column control switch.

- Carefully release the clip.

11.

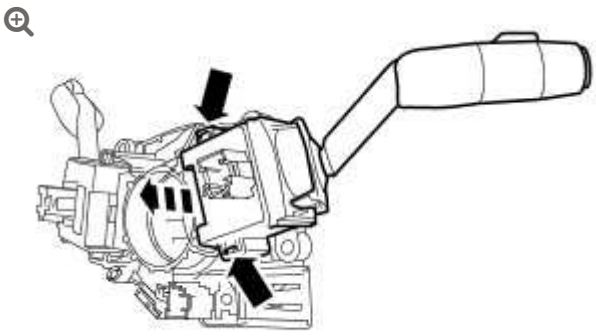

E 79632

Remove the LH steering column multifunction switch.

- Release the 2 clips.

12. Remove the RH steering column multifunction switch.

- Release the 2 clips.

INSTALLATION

1. Install RH steering column multifunction switch.

2. Install LH steering column multifunction switch.

3. Install the steering column control switch.

4. **NOTE:**

   If the SRS component is to be replaced, the bar code of the new unit must be recorded.

   Install the clockspring.

   - Align the wiring harness and secure with a cable tie.
   - Connect the 5 electrical connectors.
   - Install the 4 screws.

5. Install the steering column upper shroud.

6. Install the steering column lower shroud.

   - Install the 3 screws.

7. Attach the steering column extension gaiter.

8. Install the steering wheel.
   For additional information, refer to: Steering Wheel (211-04, Removal and Installation).

9. Connect the battery ground cable.
   For additional information, refer to: Specifications (414-00, Specifications).

10. Return the steering column to its original position.

2012.0 RANGE ROVER (LM), 501-20

SUPPLEMENTAL RESTRAINT SYSTEM

DRIVER AIR BAG MODULE

(G874162)

REMOVAL AND INSTALLATION

76.74.01	AIR BAG - STEERING WHEEL - RENEW	ALL DERIVATIVES	0.2	USED WITHINS	+

REMOVAL

WARNINGS:

- Persons working on the supplemental restraint system (SRS) must be fully trained and have been issued with the safety guidelines.
- Allow a period of 10 minutes to elapse after disconnecting the battery before undertaking any work on the SRS.
- The SRS electrical connectors are unique. DO NOT force, or attempt to connect electrical connectors to the wrong sockets.
- The correct procedures must always be used when working on SRS components.
- It is imperative that before any work is undertaken on the SRS system, the appropriate information is read thoroughly.
- Always disconnect both battery cables before beginning work on the SRS system. Disconnect the ground cable first. Never reverse connect the battery.
- Take extra care when handling SRS components.

NOTE:

If the SRS component is to be replaced, the bar code of the new unit must be recorded.

1. Make the air bag supplemental restraint system (SRS) safe. For additional information, refer to: Standard Workshop Practices (100-00, Description and Operation).

2.

Disconnect the battery ground cable.
For additional information, refer to: Specifications (414-00, Specifications).

3.

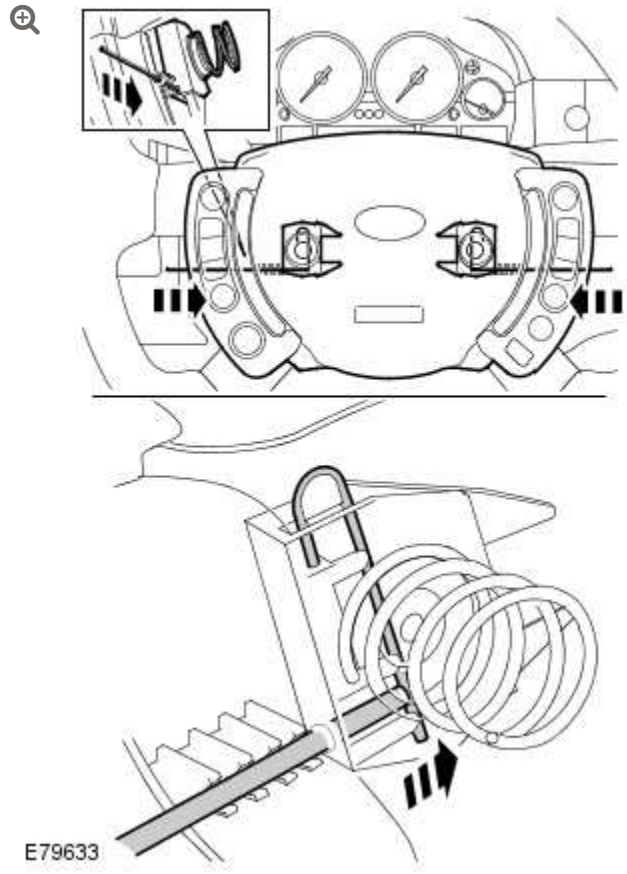

Release the 2 clips from the driver air bag module using a rod at least 50 mm (2 inches.) long and not exceeding 3 mm (1/8 inch.) diameter. Install the rod through each access hole in the steering wheel control switches at right angles to the steering column. Locate the secondary hole and carefully push on the rod until the clip is released.

4.



Remove the driver air bag module.

- Disconnect the 3 electrical connectors.

5.

NOTE:

Do not disassemble further if the component is removed for access only.

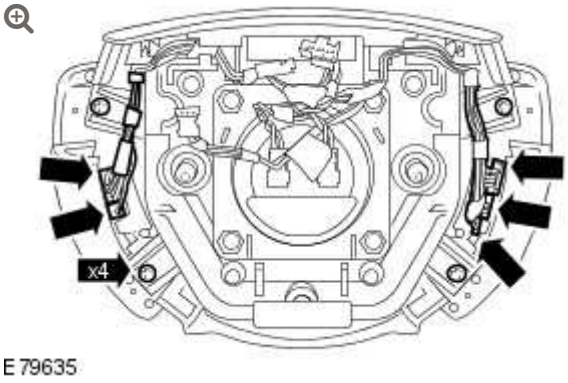

Remove the speed control switch and steering wheel audio controls.

- Remove the 4 screws.
- Disconnect the 5 electrical connectors from the speed control switch and steering wheel audio controls.

INSTALLATION

1. Install the speed control switch and steering wheel audio controls.
   - Connect the 5 electrical connectors to the speed control switch and steering wheel audio controls.
   - Install the 4 screws and tighten to 3 Nm (2 lb.ft).

2. **NOTE:**

   If the SRS component is to be replaced, the bar code of the new unit must be recorded.

   Position the driver air bag module and connect the 3 electrical connectors.

3. Locate the driver air bag module and carefully push to secure the clips.

4. Connect the battery ground cable.
   For additional information, refer to: Specifications (414-00, Specifications).

SUPPLEMENTAL RESTRAINT SYSTEM

DRIVER LOWER AIR BAG MODULE (G899343)

REMOVAL AND INSTALLATION

REMOVAL

WARNINGS:

- Persons working on the supplemental restraint system (SRS) must be fully trained and have been issued with the safety guidelines.
- Allow a period of 10 minutes to elapse after disconnecting the battery before undertaking any work on the SRS.
- The SRS electrical connectors are unique. DO NOT force, or attempt to connect electrical connectors to the wrong sockets.
- The correct procedures must always be used when working on SRS components.
- It is imperative that before any work is undertaken on the SRS system, the appropriate information is read thoroughly.
- Always disconnect both battery cables before beginning work on the SRS system. Disconnect the ground cable first. Never reverse connect the battery.
- Take extra care when handling SRS components.

CAUTION:

The driver lower air bag module is handed to the drive of vehicle.

NOTE:

If the SRS component is to be replaced, the bar code of the new unit must be recorded.

1. Make the air bag supplemental restraint system (SRS) safe.
   For additional information, refer to: Standard Workshop Practices (100-00, Description and Operation).

2. Disconnect the battery ground cable.
   For additional information, refer to: Specifications (414-00, Specifications).

3. Remove the instrument panel lower section.
   For additional information, refer to: Instrument Panel Lower Section (501-12, Removal and Installation).

4. 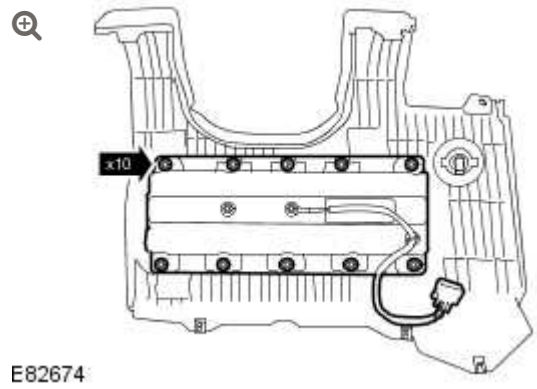

   Remove the driver lower air bag module.

   - Remove the 10 nuts.

INSTALLATION

1. **NOTE:**

   If the SRS component is to be replaced, the bar code of the new unit must be recorded.

   Install the driver lower air bag module.

   - Tighten the nuts to 8 Nm (6 lb.ft).

2. Install the instrument panel lower section.
   For additional information, refer to: Instrument Panel Lower Section (501-12, Removal and Installation).

3. Connect the battery ground cable.
   For additional information, refer to: Specifications (414-00, Specifications).

SUPPLEMENTAL RESTRAINT SYSTEM

FRONT SEAT SIDE AIR BAG MODULE (G909553)

REMOVAL AND INSTALLATION

REMOVAL

WARNINGS:

- Persons working on the supplemental restraint system (SRS) must be fully trained and have been issued with the safety guidelines.
- The correct procedures must always be used when working on SRS components.
- Allow a period of 10 minutes to elapse after disconnecting the battery before undertaking any work on the SRS.
- The SRS electrical connectors are unique. DO NOT force, or attempt to connect electrical connectors to the wrong sockets.
- Always disconnect both battery cables before beginning work on the SRS system. Disconnect the ground cable first. Never reverse connect the battery.
- It is imperative that before any work is undertaken on the SRS system, the appropriate information is read thoroughly.
- Take extra care when handling SRS components.

1. Disconnect the battery ground cable.
   For additional information, refer to: Specifications (414-00, Specifications).

2. Make the air bag supplemental restraint system (SRS) safe.
   For additional information, refer to: Standard Workshop Practices (100-00, Description and Operation).

3. Remove the front seat backrest cover.
   For additional information, refer to: Front Seat Backrest Cover (501-10, Removal and Installation).

4.

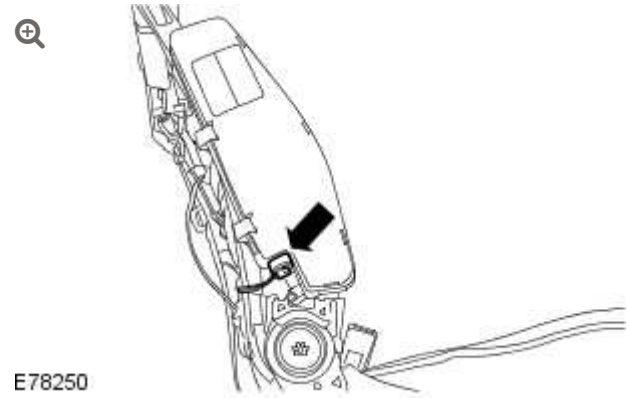

Disconnect the side air bag module electrical connector.

5.

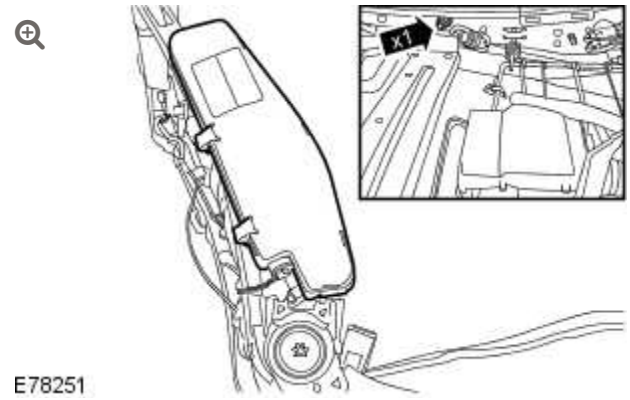

Remove the front seat side air bag module.

- Remove and discard the nut.

INSTALLATION

1. Install the front seat side air bag module.
   - Tighten the new nut to 7 Nm (5 lb.ft).
2. Connect the side air bag module electrical connector.
3. Install the front seat backrest cover.
   For additional information, refer to: Front Seat Backrest Cover (501-10, Removal and Installation).

4. Connect the battery ground cable.
   For additional information, refer to: Specifications (414-00, Specifications).

SUPPLEMENTAL RESTRAINT SYSTEM

OCCUPANT CLASSIFICATION SENSOR

(G909979)

REMOVAL AND INSTALLATION

76.74.76	SENSOR - SEAT OCCUPANCY - RENEW	ALL DERIVATIVES	1.2	USED WITHINS	+

REMOVAL

WARNINGS:

- Persons working on the supplemental restraint system (SRS) must be fully trained and have been issued with the safety guidelines.
- Allow a period of 10 minutes to elapse after disconnecting the battery before undertaking any work on the SRS.
- The SRS electrical connectors are unique. DO NOT force, or attempt to connect electrical connectors to the wrong sockets.
- The correct procedures must always be used when working on SRS components.
- It is imperative that before any work is undertaken on the SRS system, the appropriate information is read thoroughly.
- Always disconnect both battery cables before beginning work on the SRS system. Disconnect the ground cable first. Never reverse connect the battery.
- Take extra care when handling SRS components.

CAUTION:

The front passenger seat occupant classification sensor is available only as a service kit. No attempt should be made to replace individual components. Failure to follow this instruction may result in personal injury.

1. Disconnect the battery ground cable.
   For additional information, refer to: Specifications (414-00, Specifications).

2. Make the air bag supplemental restraint system (SRS) safe.
   For additional information, refer to: Standard Workshop Practices (100-00, Description and Operation).

3. Remove the front seat cushion cover.
   For additional information, refer to: Front Seat Cushion Cover (501-10, Removal and Installation).

4. 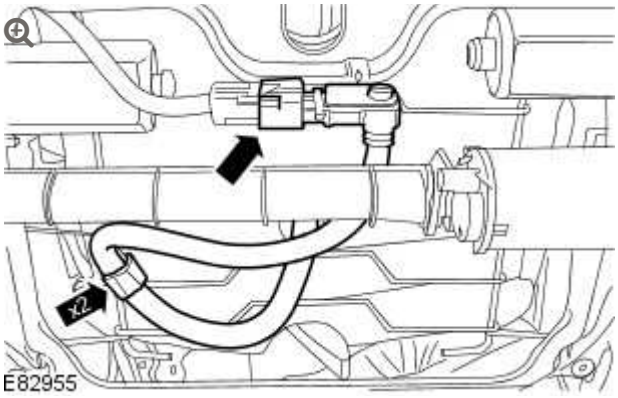

   Disconnect the occupant classification sensor electrical connector.

   - Release the 2 clips from the occupant classification sensor wiring harness.

5. 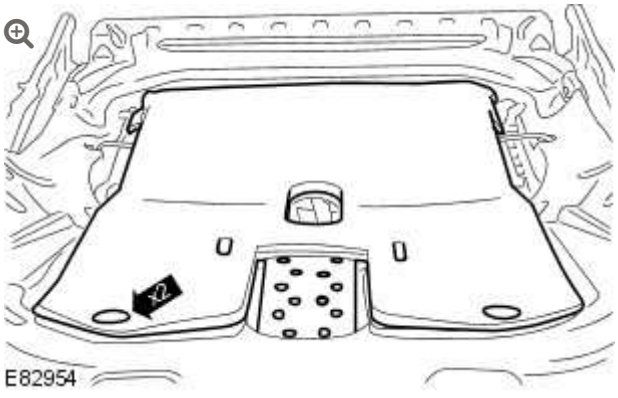

   Remove the occupant classification sensor.

   - Remove the 2 clips.
   - Reposition the occupant classification sensor wiring harness.

INSTALLATION

1. Install the occupant classification sensor.
   - Reposition the occupant classification sensor wiring harness.
   - Install the 2 clips.
2. Connect the occupant classification sensor electrical connector.
   - Secure the 2 clips to the occupant classification sensor wiring harness.
3. Install the front seat cushion cover.
   For additional information, refer to: Front Seat Cushion Cover (501-10, Removal and Installation).
4. Connect the battery ground cable.
   For additional information, refer to: Specifications (414-00, Specifications).
5. Using the Land Rover approved diagnostic system, calibrate the occupant classification sensor.

SUPPLEMENTAL RESTRAINT SYSTEM

PASSENGER AIR BAG DEACTIVATION (PAD) SWITCH (G874163)

REMOVAL AND INSTALLATION

76.74.19	SWITCH - PASSENGER AIR BAG DEACTIVATION (PAD) - RENEW	ALL DERIVATIVES	0.1	USED WITHINS	+

REMOVAL

WARNINGS:

- Persons working on the supplemental restraint system (SRS) must be fully trained and have been issued with the safety guidelines.
- Allow a period of 10 minutes to elapse after disconnecting the battery before undertaking any work on the SRS.
- The SRS electrical connectors are unique. DO NOT force, or attempt to connect electrical connectors to the wrong sockets.
- The correct procedures must always be used when working on SRS components.
- It is imperative that before any work is undertaken on the SRS system, the appropriate information is read thoroughly.
- Always disconnect both battery cables before beginning work on the SRS system. Disconnect the ground cable first. Never reverse connect the battery.
- Take extra care when handling SRS components.

1. Make the air bag supplemental restraint system (SRS) safe.
   For additional information, refer to: Standard Workshop Practices (100-00, Description and Operation).

2. Disconnect the battery ground cable.
   For additional information, refer to: Specifications (414-00, Specifications).

3.

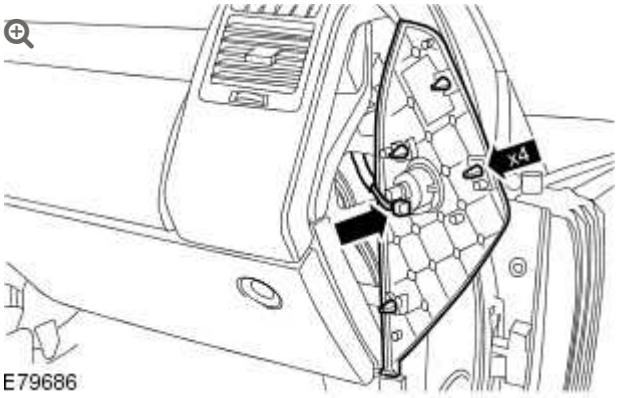

Remove the instrument panel end trim panel.

- Release sufficient door aperture seal for access.
- Carefully release the 4 clips.
- Disconnect the electrical connector from the passenger air bag deactivation switch.

4.

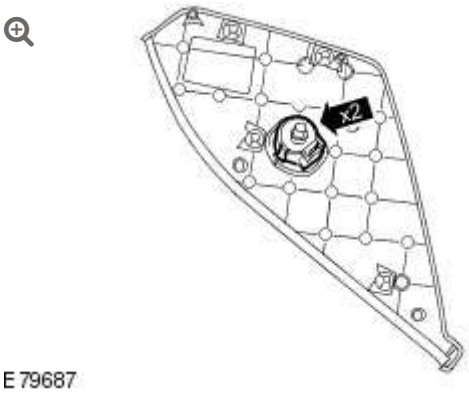

Remove the passenger air bag deactivation switch.

- Release the 2 clips.

INSTALLATION

1. Install the passenger air bag deactivation switch.

2. Install the instrument panel end trim panel.

-

Connect the passenger air bag deactivation switch electrical connector.

- Carefully align and secure the clips.
- Install the aperture seal.

3. Connect the battery ground cable.
   For additional information, refer to: Specifications (414-00, Specifications).

SUPPLEMENTAL RESTRAINT SYSTEM

PASSENGER AIR BAG MODULE (G1988668)

REMOVAL AND INSTALLATION

76.74.02	AIR BAG – INSTRUMENT PANEL – PASSENGER – RENEW	ALL DERIVATIVES	1.4	USED WITHINS	+

REMOVAL

WARNINGS:

- Persons working on the supplemental restraint system (SRS) must be fully trained and have been issued with the safety guidelines.
- Allow a period of 10 minutes to elapse after disconnecting the battery before undertaking any work on the SRS.
- The SRS electrical connectors are unique. DO NOT force, or attempt to connect electrical connectors to the wrong sockets.
- The correct procedures must always be used when working on SRS components.
- It is imperative that before any work is undertaken on the SRS system, the appropriate information is read thoroughly.
- Always disconnect both battery cables before beginning work on the SRS system. Disconnect the ground cable first. Never reverse connect the battery.
- Take extra care when handling SRS components.

NOTE:

If the SRS component is to be replaced, the bar code of the new unit must be recorded.

1. - Open the upper and lower glove compartment.

2. - Make the air bag supplemental restraint system (SRS) safe.
   Refer to: Standard Workshop Practices (100-00 General Information, Description and Operation).

3. - Disconnect both battery cables.
   Refer to: Specifications (414-00 Battery and Charging System - General Information, Specifications).

4. 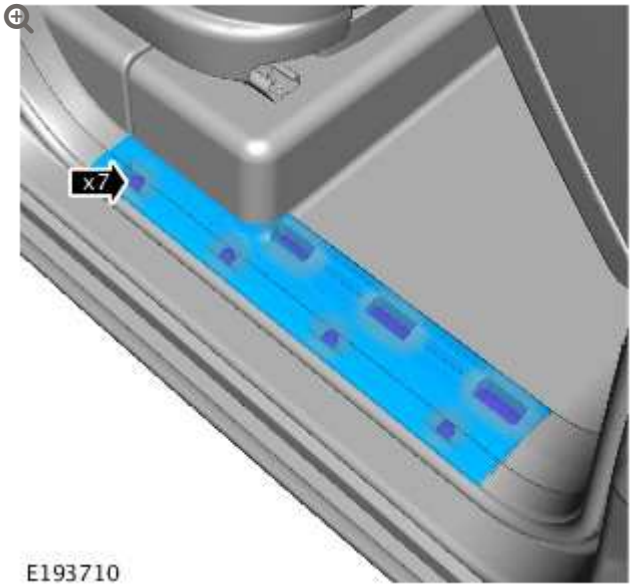

   - Remove the front scuff plate trim panel.
   - Release the 7 clips.

5. 

   - Remove the cowl side trim panel.
   - Release the 2 clips.

6.

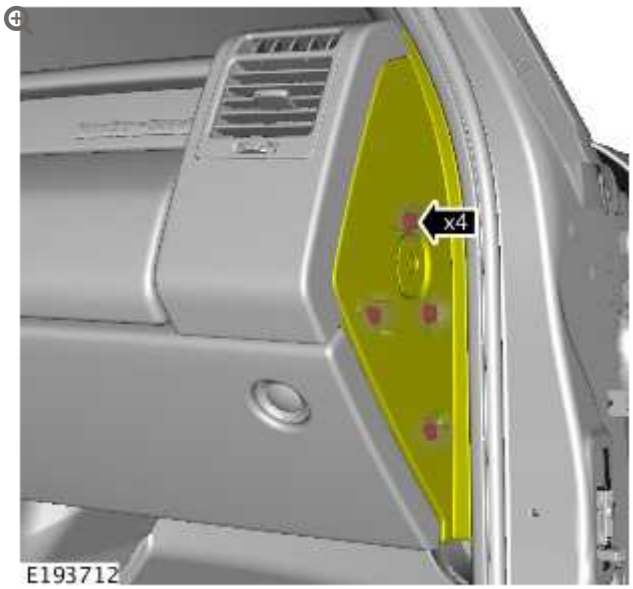

- Release the instrument panel end trim panel.
- Release the 4 clips.

7.



- Remove the instrument panel end trim panel.
- Disconnect the electrical connector.

8.

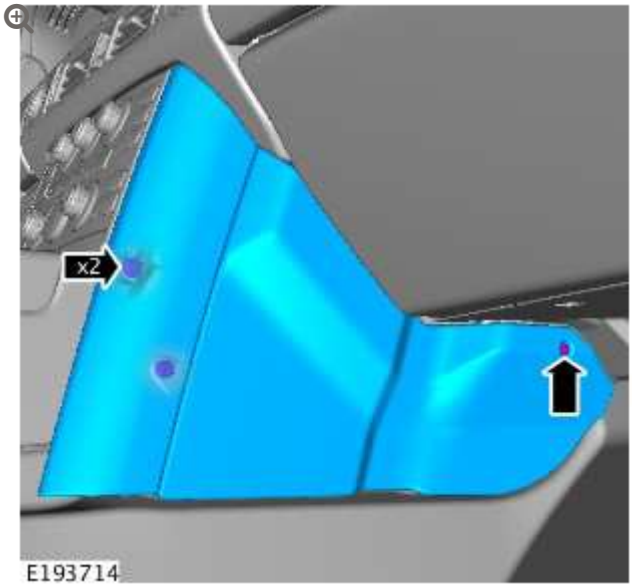

- Remove the floor console extension trim panel.
- Remove the screw.
- Release the 2 clips.

9.

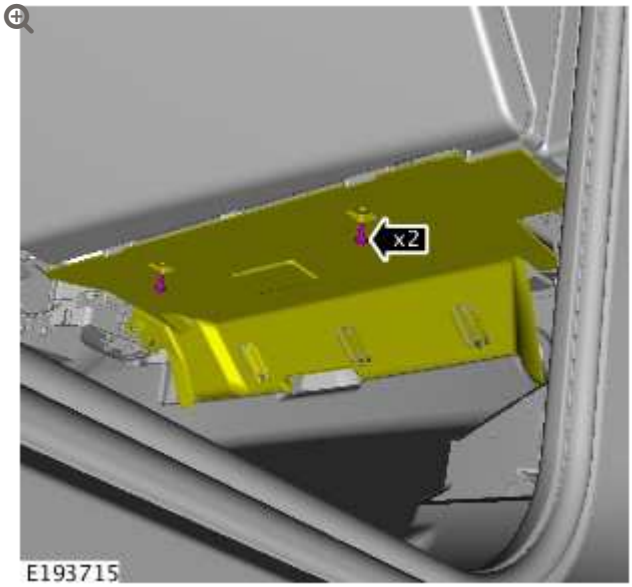

- Release the closing trim panel.
- Remove the 2 screws.

10.

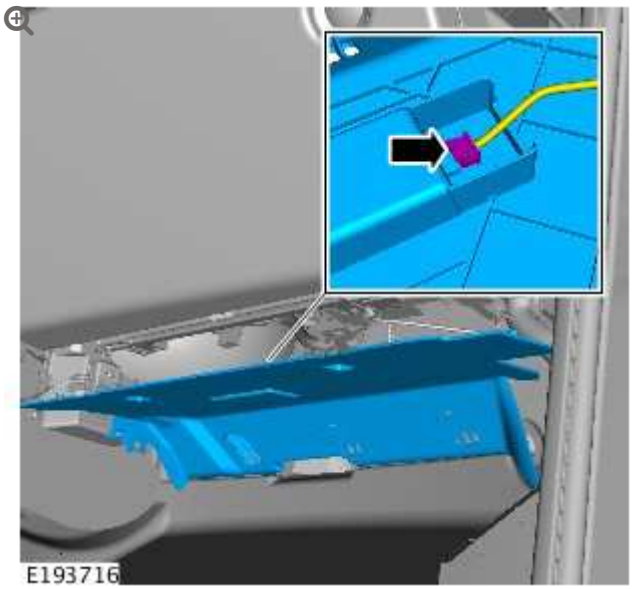

- Remove the closing trim panel.
- Disconnect the electrical connector.

11.

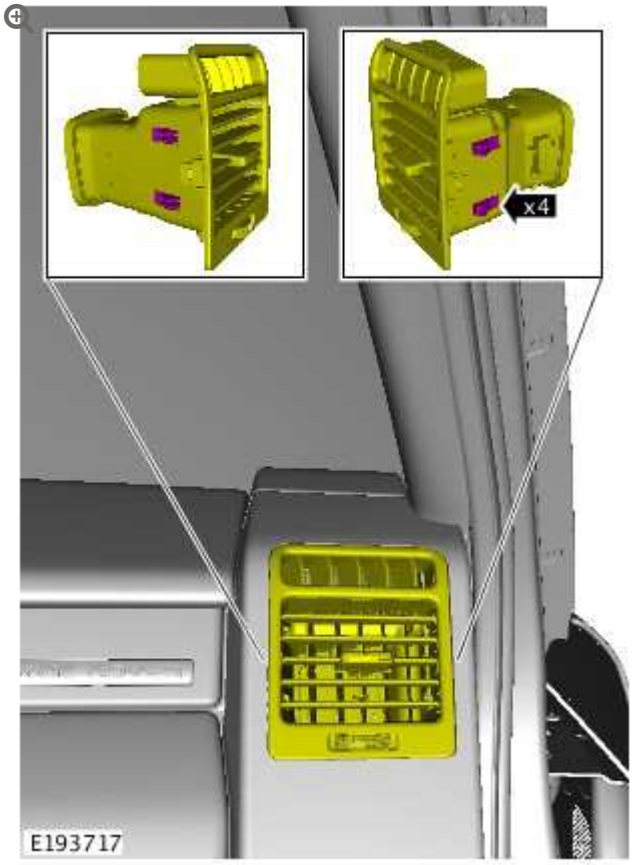

- Release the side register.

- Release the 4 clips.

12.

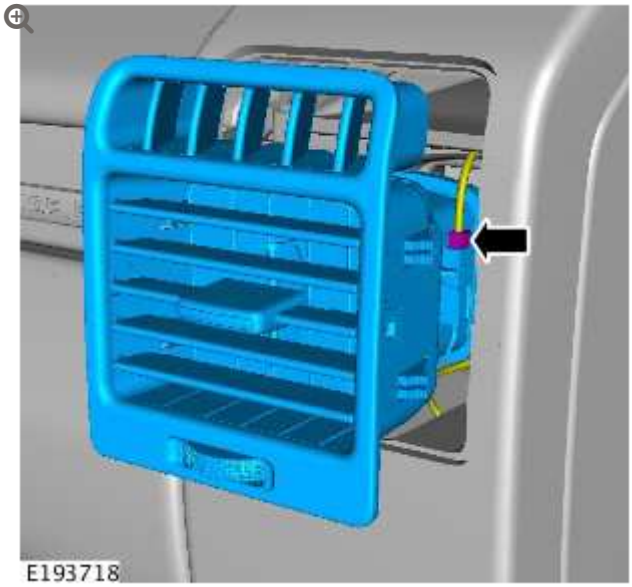

- Remove the side register.
- Disconnect the electrical connector.

13.

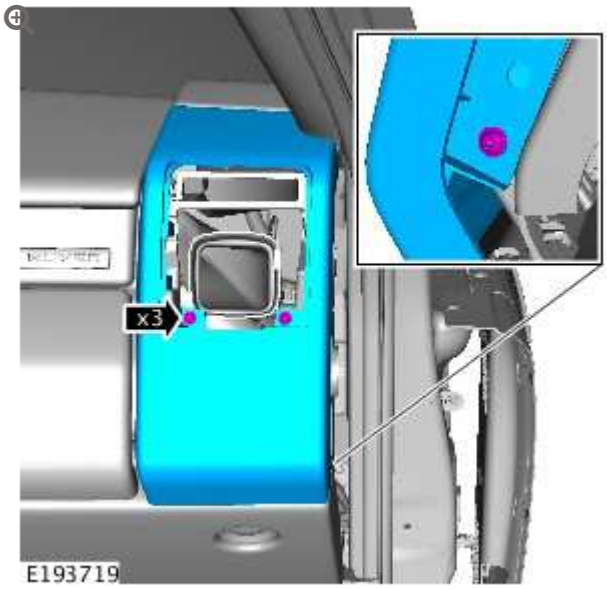

- Remove the side register trim panel.
- Remove the 3 screws.

14.

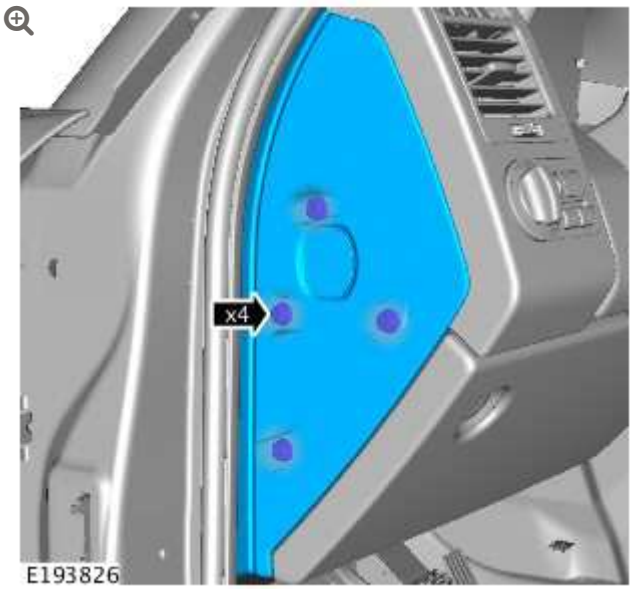

- Remove the instrument panel end trim panel.
- Release the 4 clips.

15.

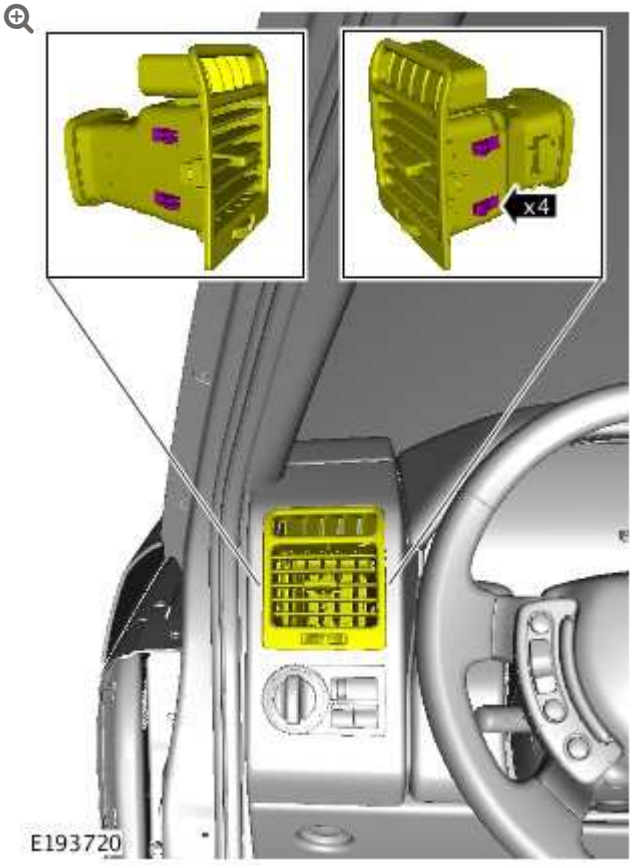

- Release the side register.

- Release the 4 clips.

16.

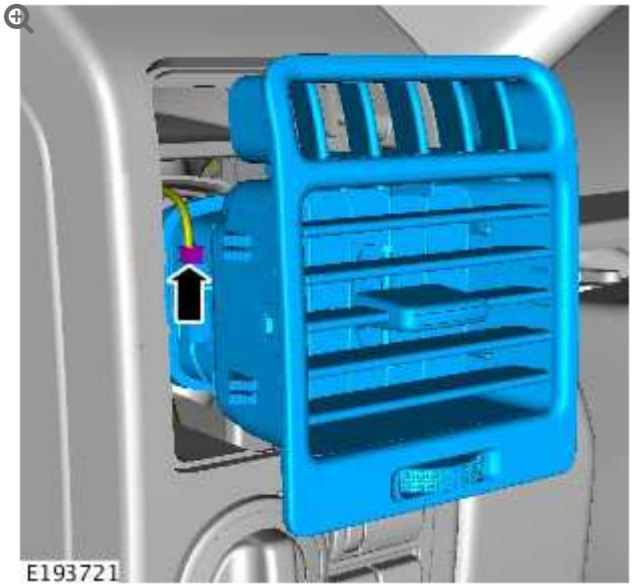

- Remove the side register.
- Disconnect the electrical connector.

17.

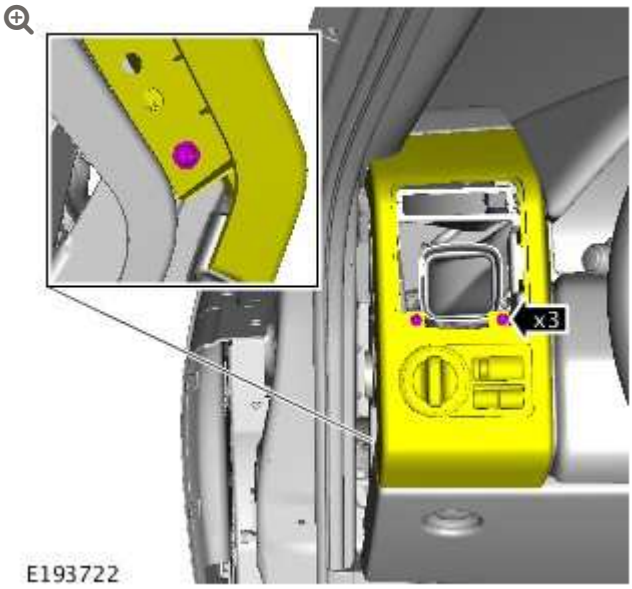

- Release the side register trim panel.
- Remove the 3 screws.

18.

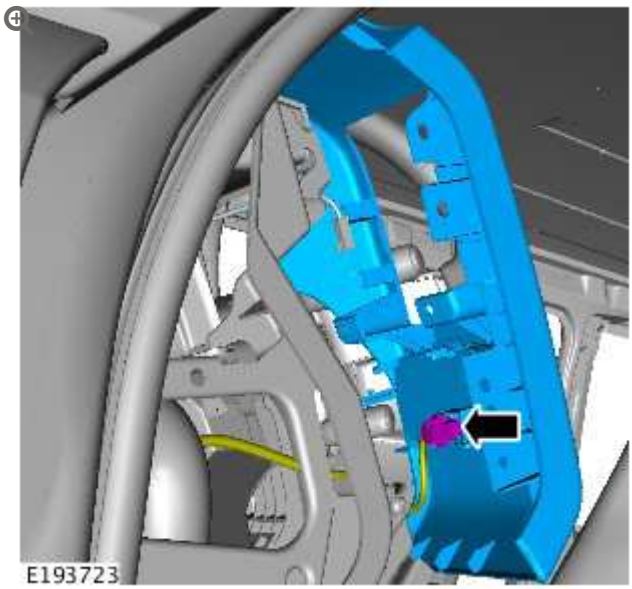

- Remove the side register trim panel.
- Disconnect the electrical connector.

19.

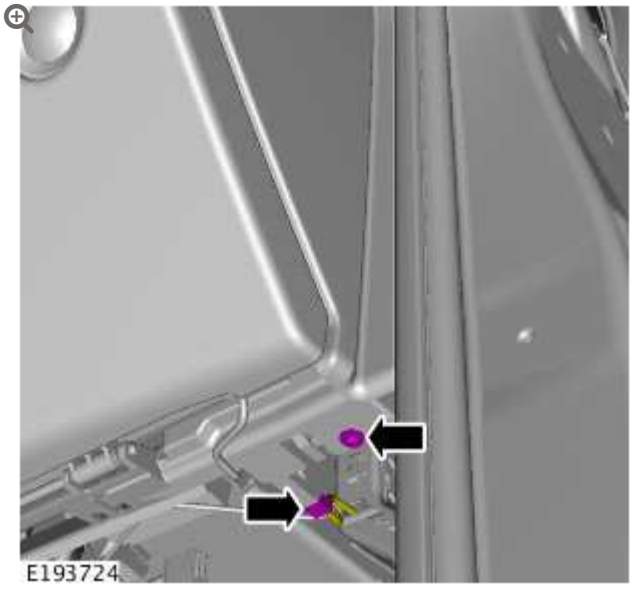

- Remove the screw.

2. Disconnect the electrical connector.

20.

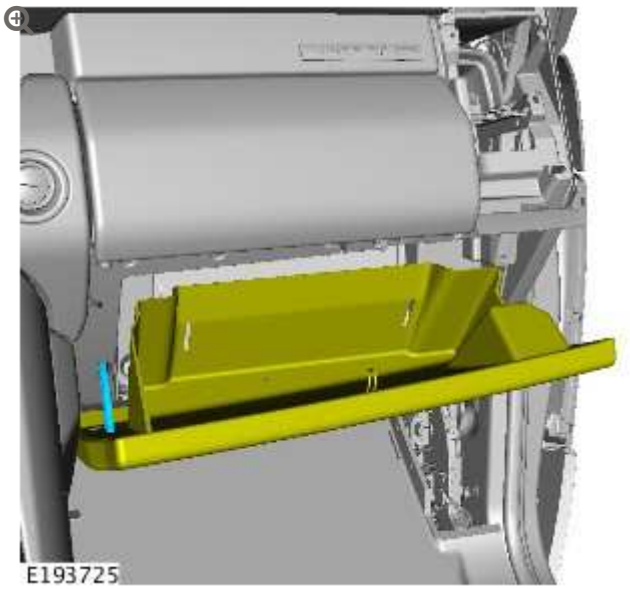

- Open the lower glove compartment to the service position.

21.

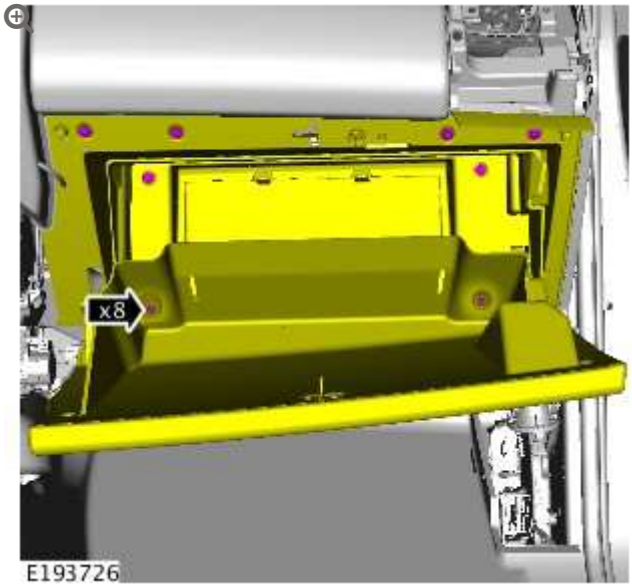

- Release the lower glove compartment.
- Remove the 8 screws.

22.

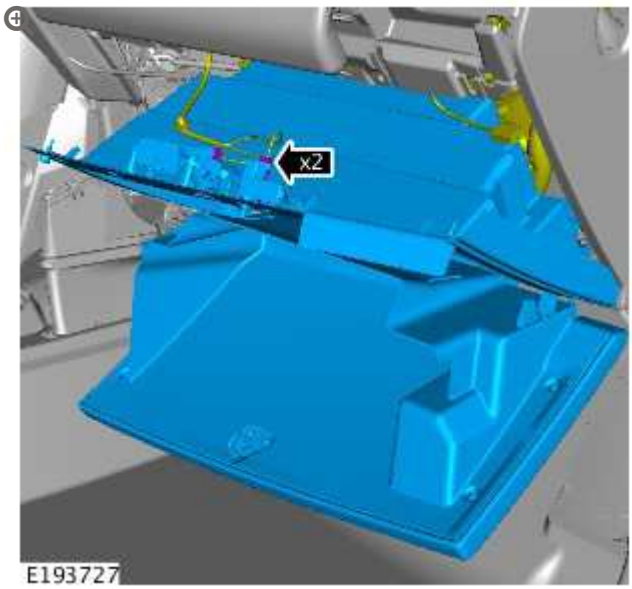

- Remove the lower glove compartment.
- Disconnect the 2 electrical connectors.

23.

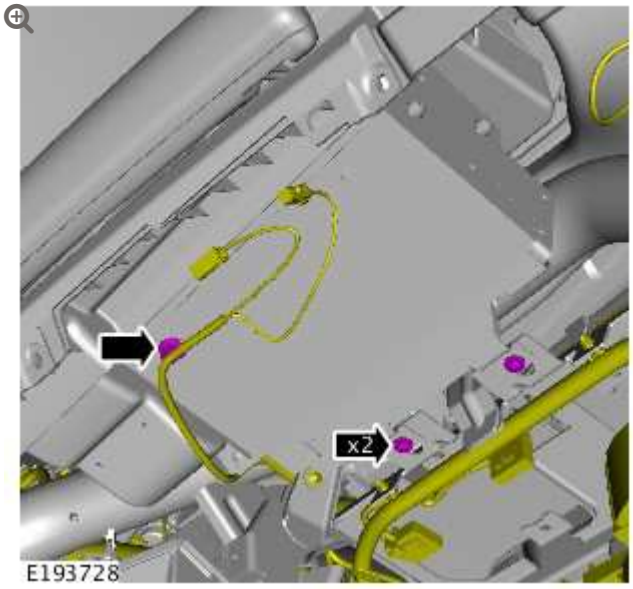

- Remove the 2 screws.
- Release the clip.

24.

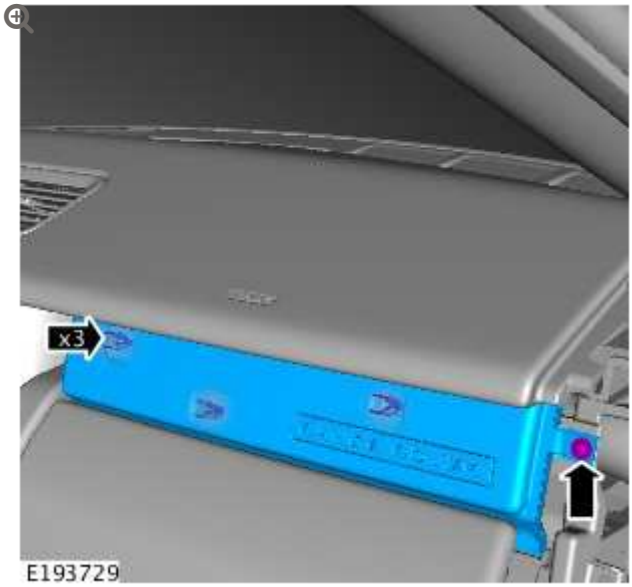

- Remove the upper glove compartment finisher trim panel.
- Remove the screw.
- Release the 3 clips.

25.

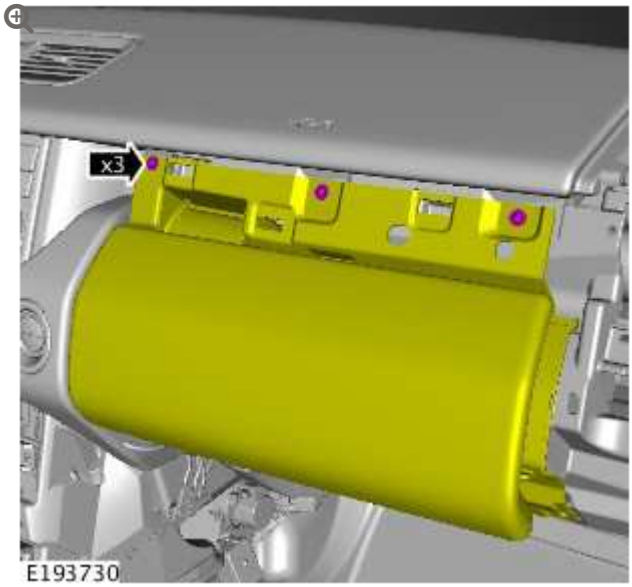

- Release the upper glove compartment.
- Remove the 3 screws.

26.

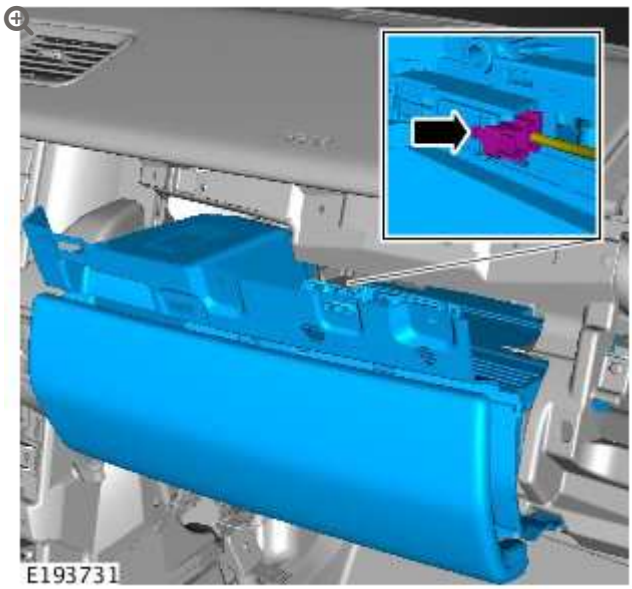

- Remove the upper glove compartment.
- Disconnect the electrical connector.

27.

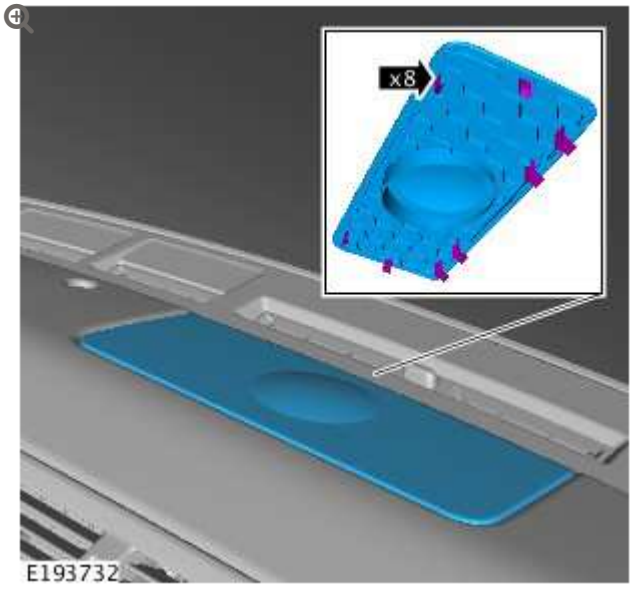

- Remove the instrument panel center speaker grille.
- Release the 8 clips.

28.

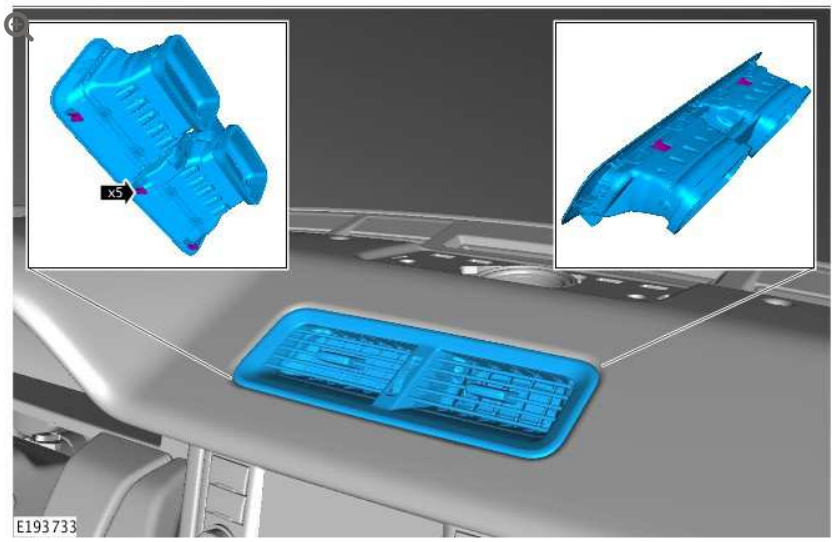

- Remove the upper center registers.
- Release the 5 clips.

29.

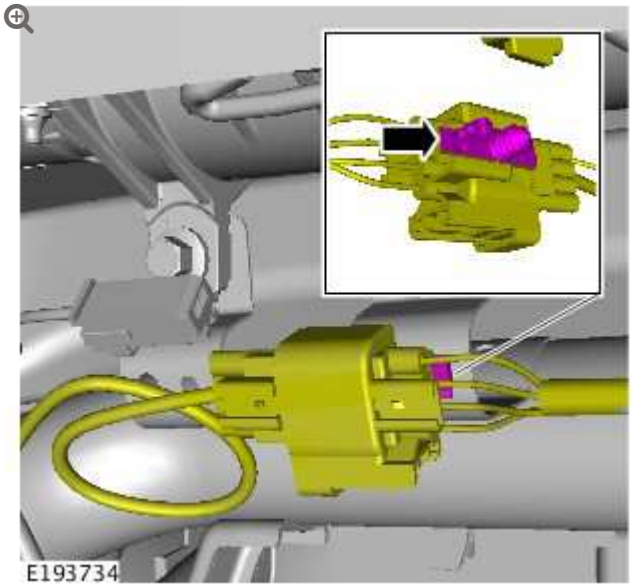

- Release the clip.

30.

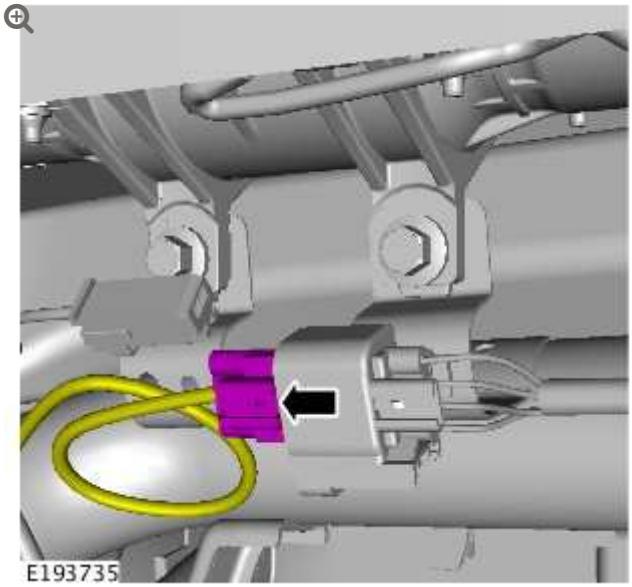

- Disconnect the electrical connector.

31.

NOTE:

Discard the bolts.

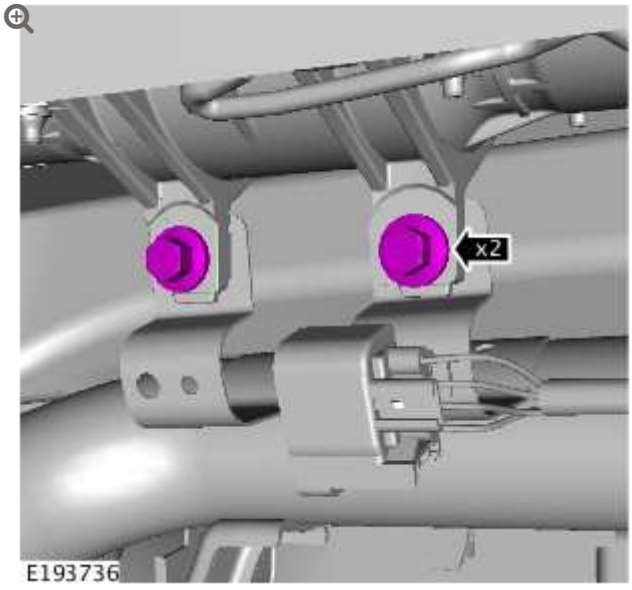

- Remove and discard the 2 bolts.

32.

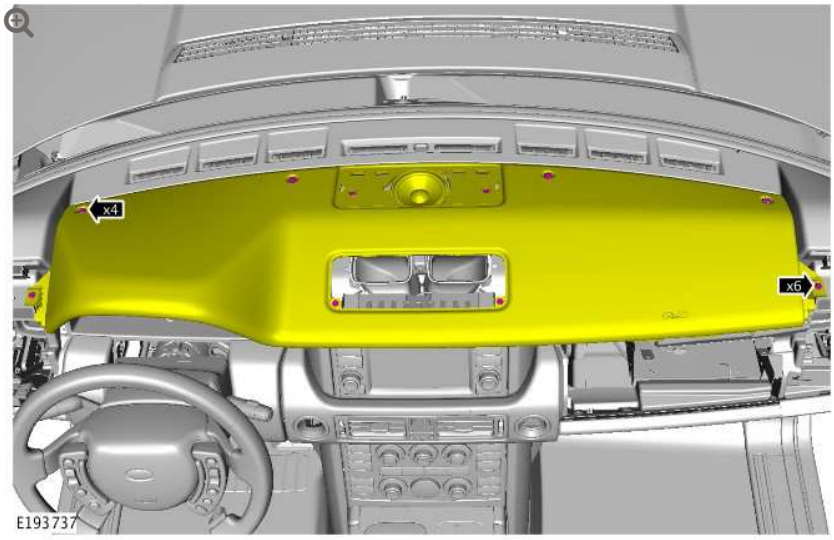

- Release the instrument panel upper section.
- Remove the 10 screws.

33.



- Remove the instrument panel upper section.
- Disconnect the electrical connector.

34.

NOTE:

Discard the nuts.

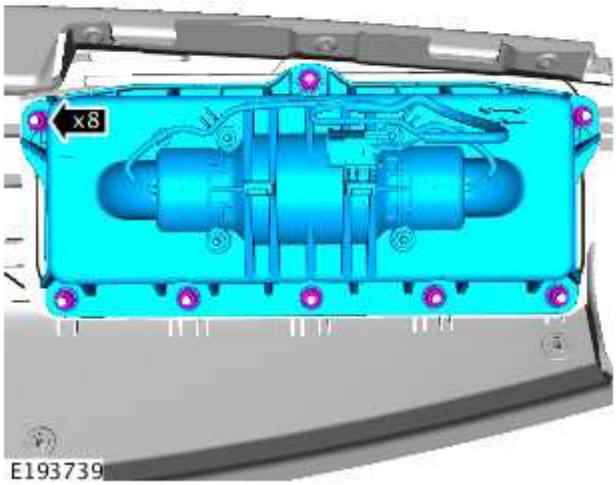

- Remove the air bag module.
- Remove and discard the 8 nuts.

35.

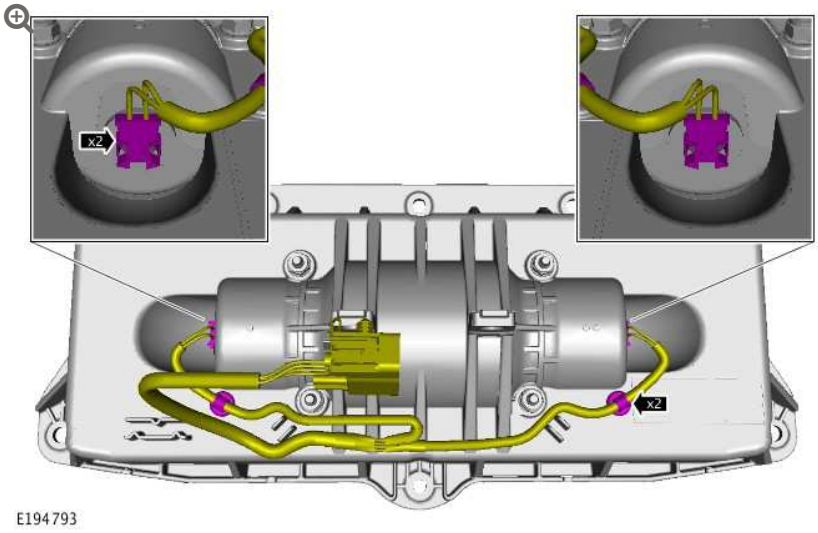

- Remove the air bag wiring harness.
- Disconnect the 2 electrical connectors.
- Release the 2 clips.

INSTALLATION

1. **WARNING:**

If a new air bag module is supplied **with** a wiring harness attached. The wiring harness **must** be removed and discarded.

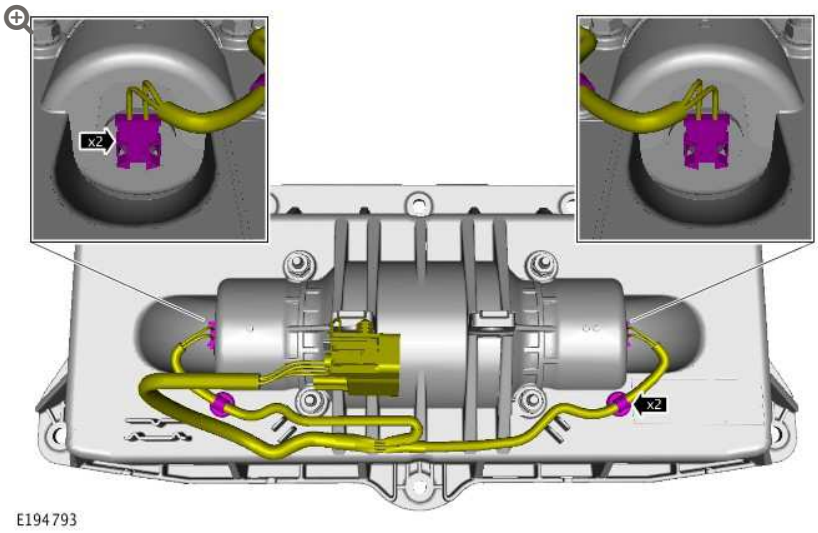

- Remove and discard the air bag wiring harness.
- Disconnect the 2 electrical connectors.
- Release the 2 clips.

2. **WARNING:**

The original air bag wiring harness, as supplied with the vehicle, **must** be fitted to the new air bag module.

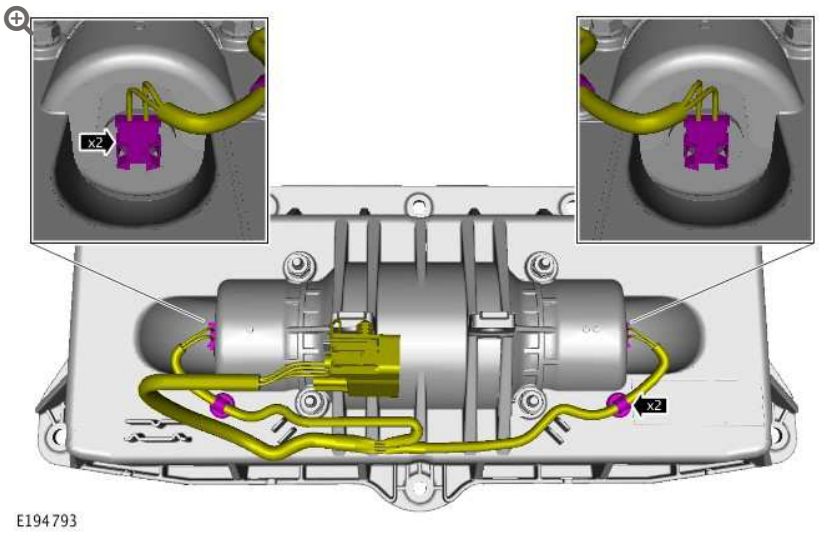

- Install the air bag wiring harness.
- Install the 2 clips.
- Connect the 2 electrical connectors.

3. **NOTE:**

New nuts must be installed.

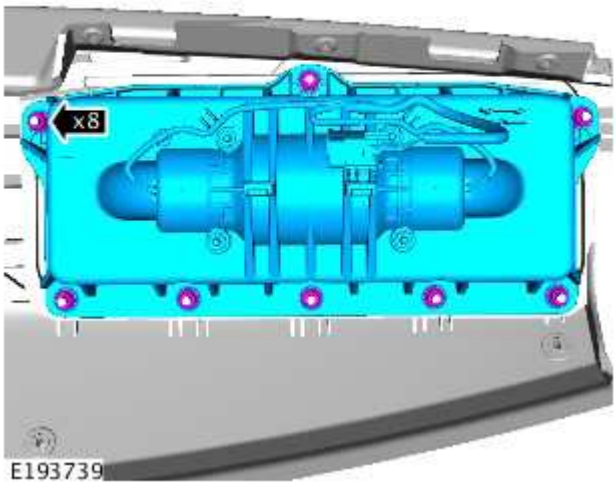

- Install the air bag module.

- Install the 8 nuts.

  Torque: **7 Nm**

4.

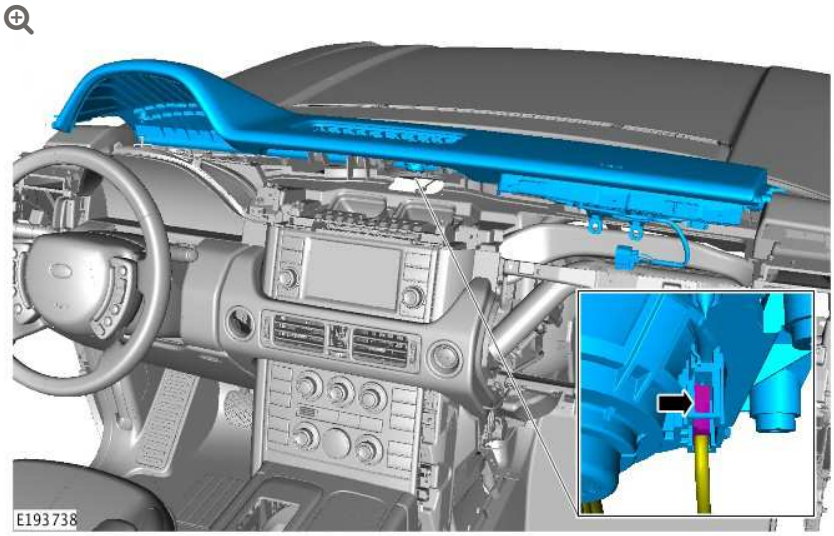

- Install the instrument panel upper section.
- Connect the electrical connector.

5.

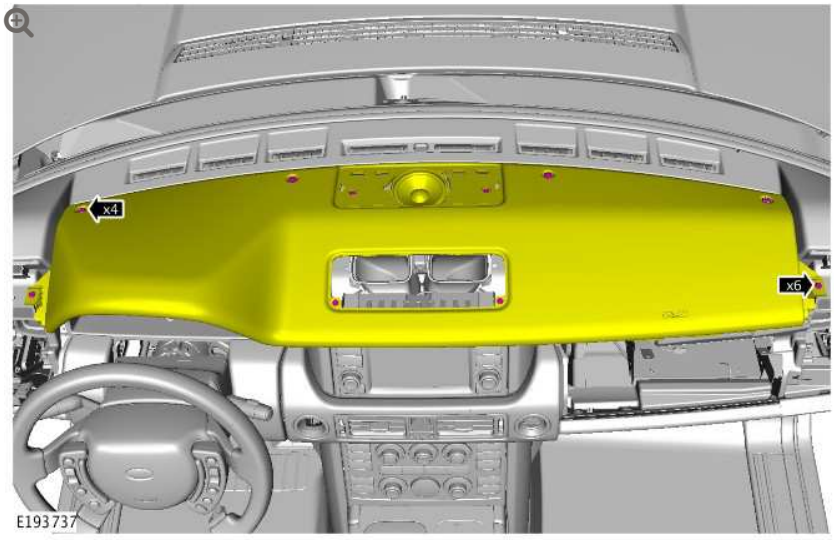

- Position the instrument panel upper section in the correct location.
- Install the 10 screws.

6.

NOTE:

New bolts must be installed.

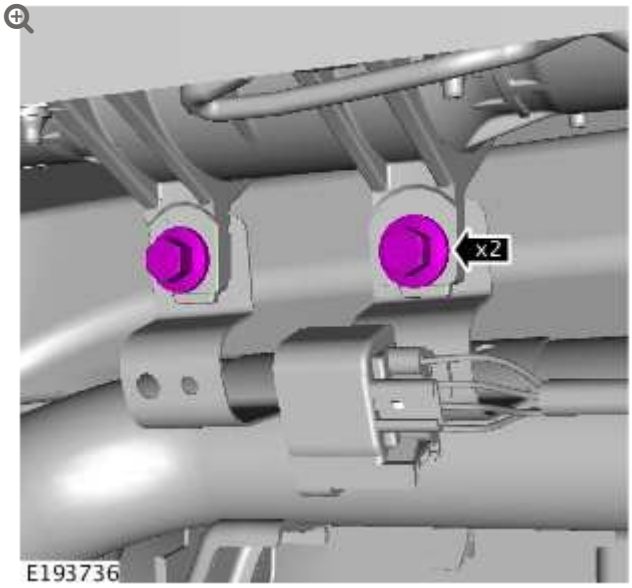

- Install the 2 bolts.
  Torque: **19 Nm**

7.

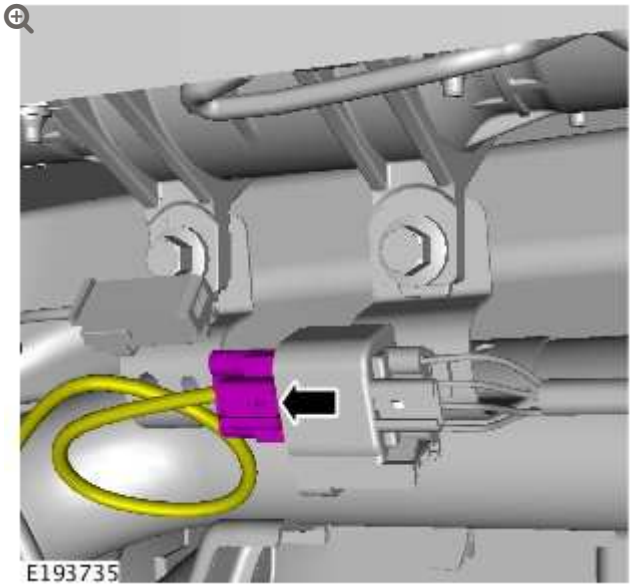

- Connect the electrical connector.

8.

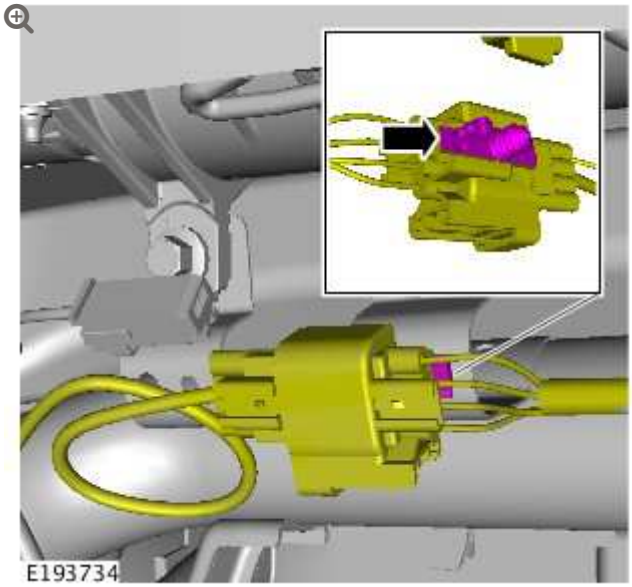

- Install the clip.

9.

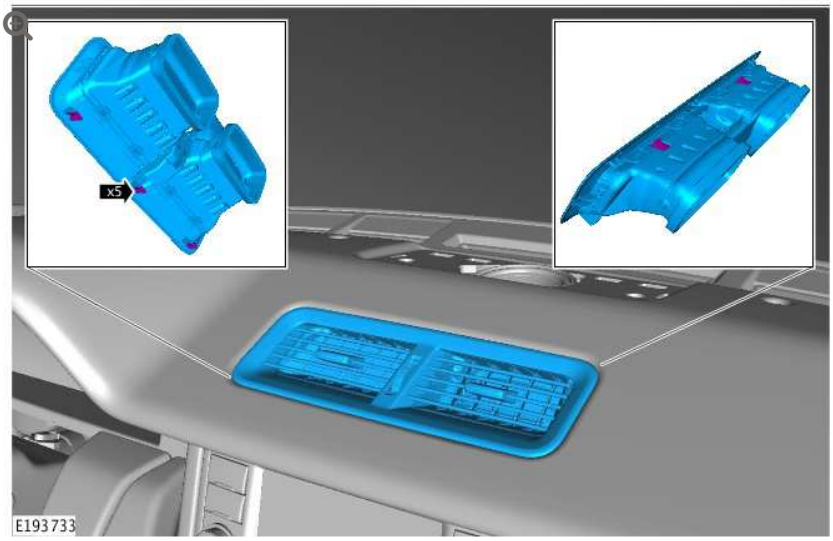

- Install the upper center registers.
- Install the 5 clips.

10.

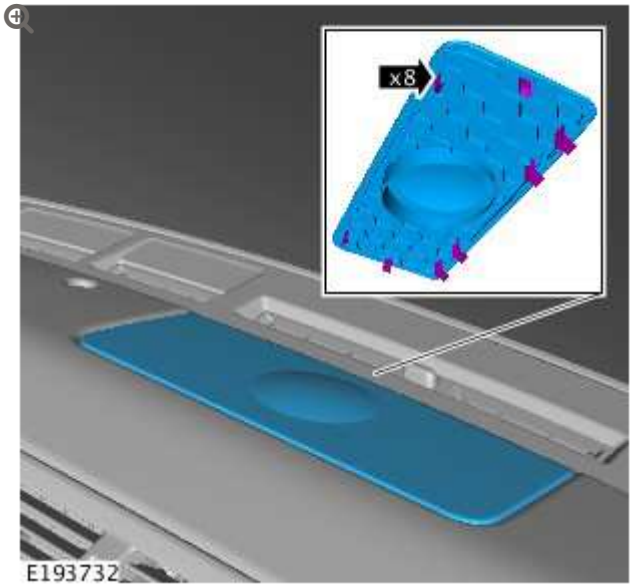

- Install the instrument panel center speaker grille.
- Install the 8 clips.

11.

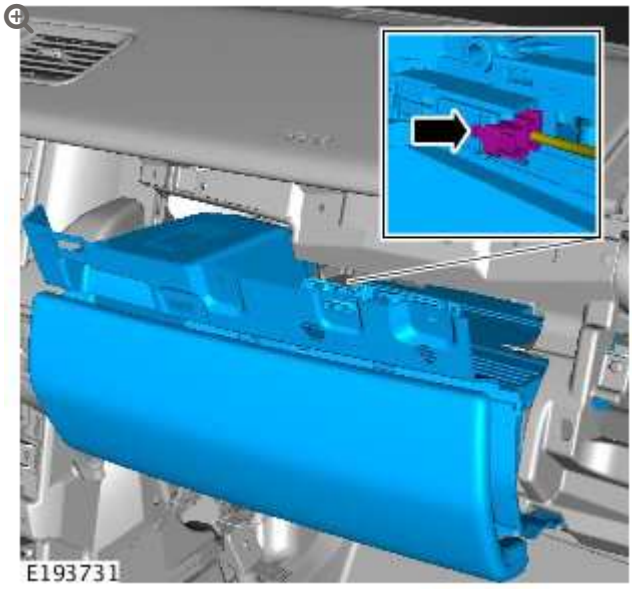

- Install the upper glove compartment.
- Connect the electrical connector.

12.

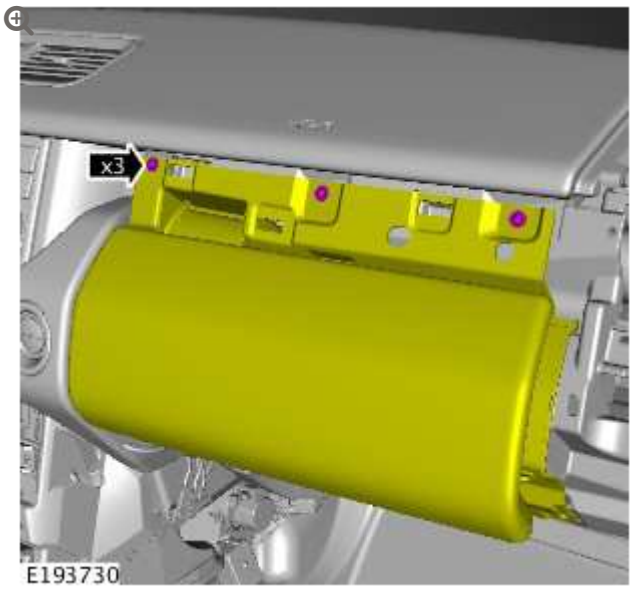

- Position the upper glove compartment in the correct location.
- Install the 3 screws.

13.

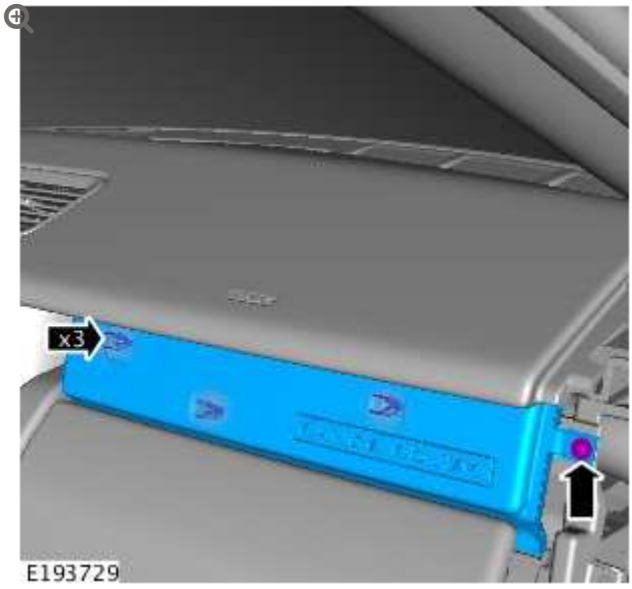

- Install the upper glove compartment finisher trim panel.
- Install the screw.
- Install the 3 clips.

14.

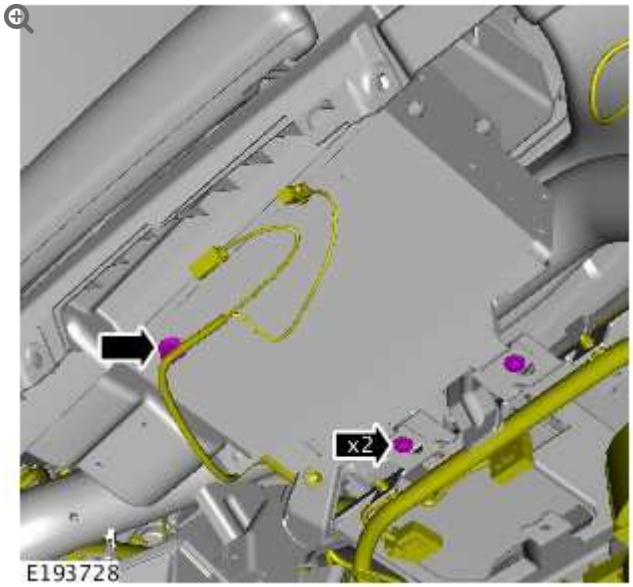

- Install the 2 screws.
- Install the clip.

15.

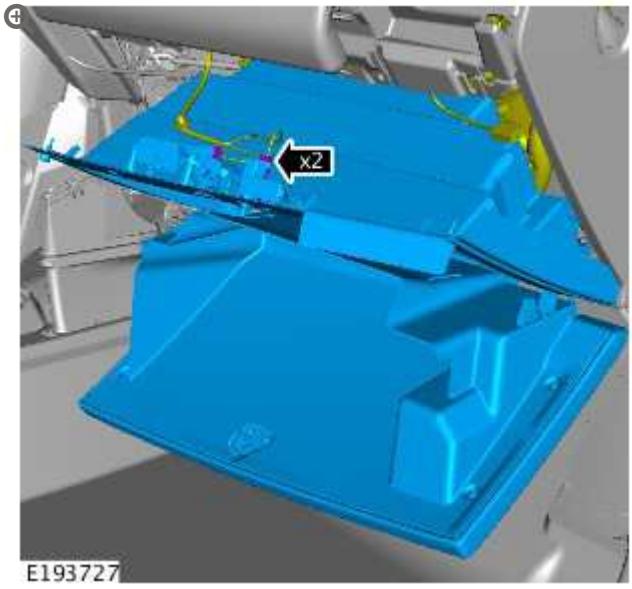

- Install the lower glove compartment.
- Connect the 2 electrical connectors.

16.

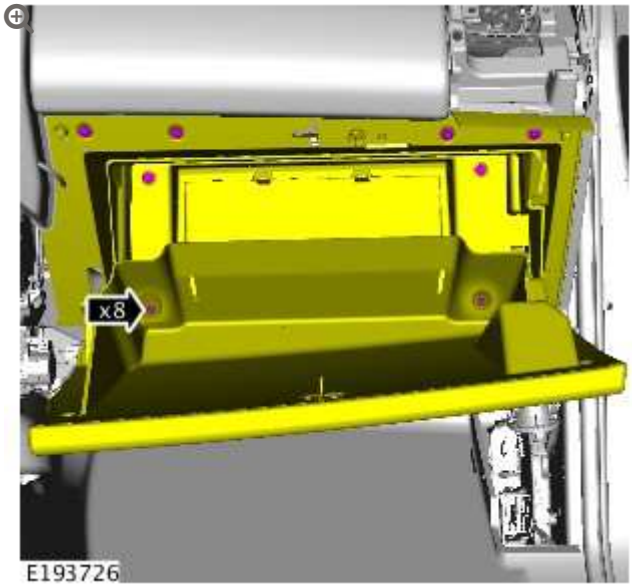

- Position the lower glove compartment in the correct location.
- Install the 8 screws.

17.

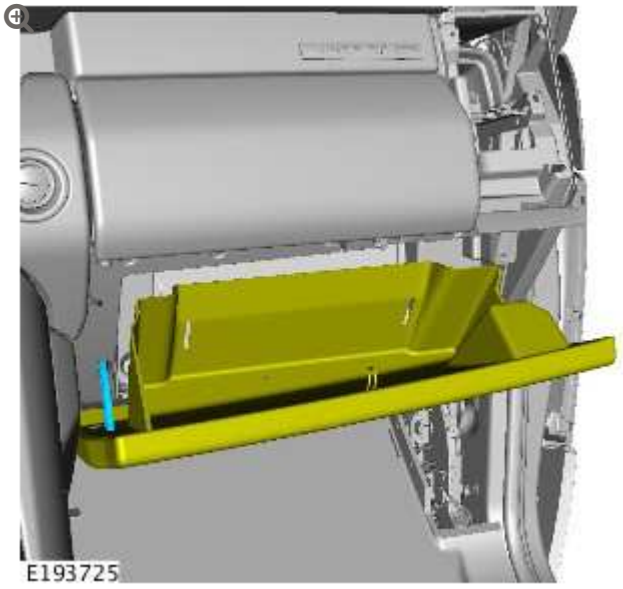

- Position the lower glove compartment out of the service position.

18.

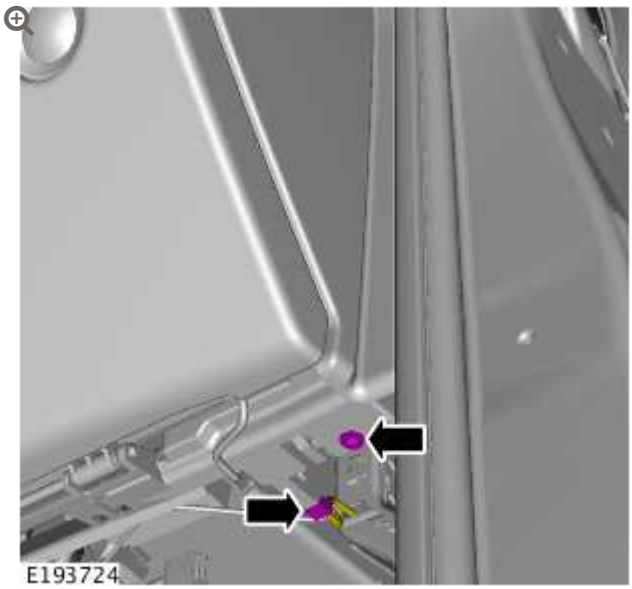

- Install the screw.

2. Connect the electrical connector.

19.

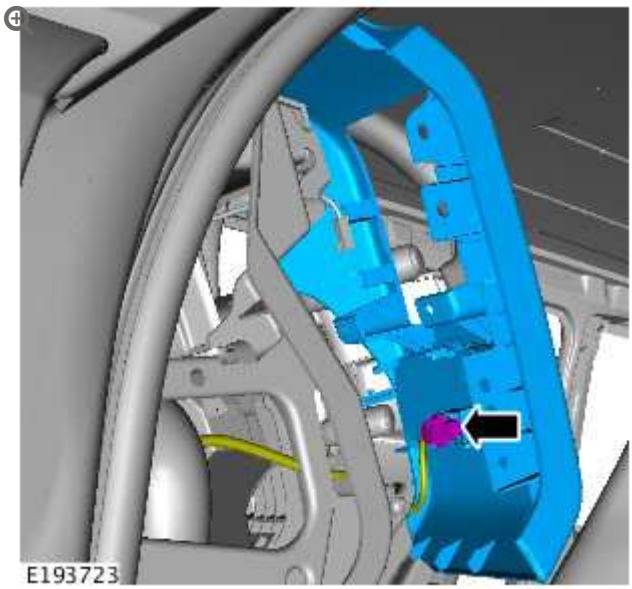

- Install the side register trim panel.
- Connect the electrical connector.

20.

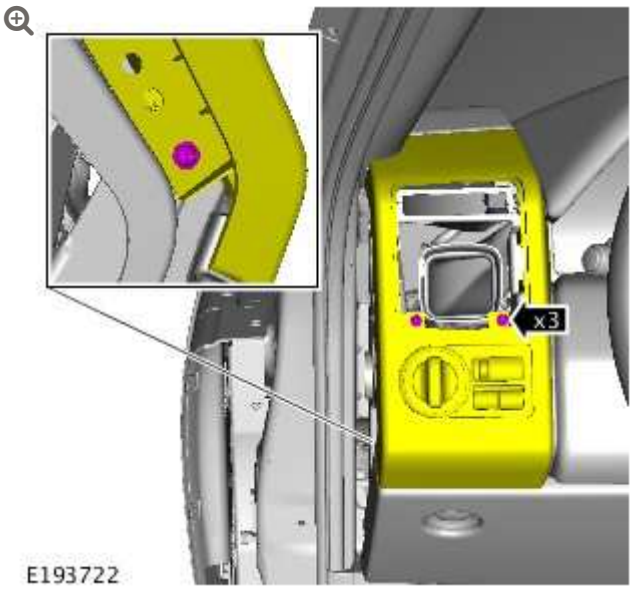

- Position the side register trim panel in the correct location.
- Install the 3 screws.

21.

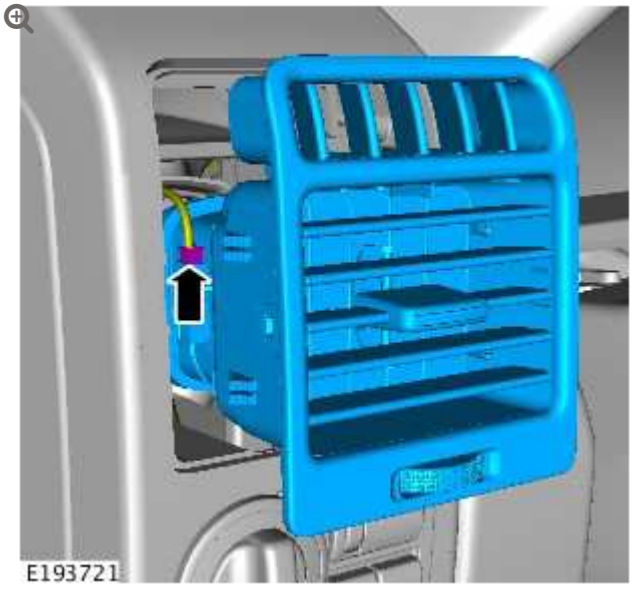

- Install the side register.
- Connect the electrical connector.

22.

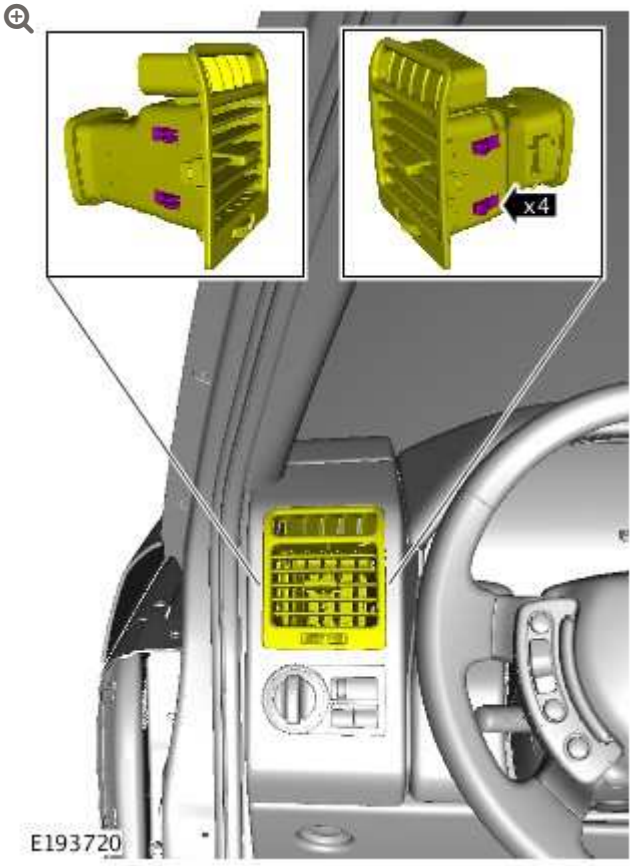

- Position the side register in the correct location.
- Install the 4 clips.

23.

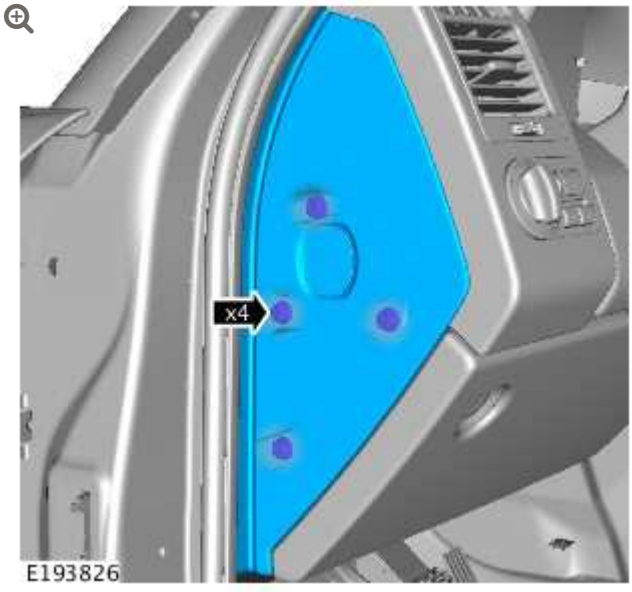

- Install the instrument panel end trim panel.

- Install the 4 clips.

24.

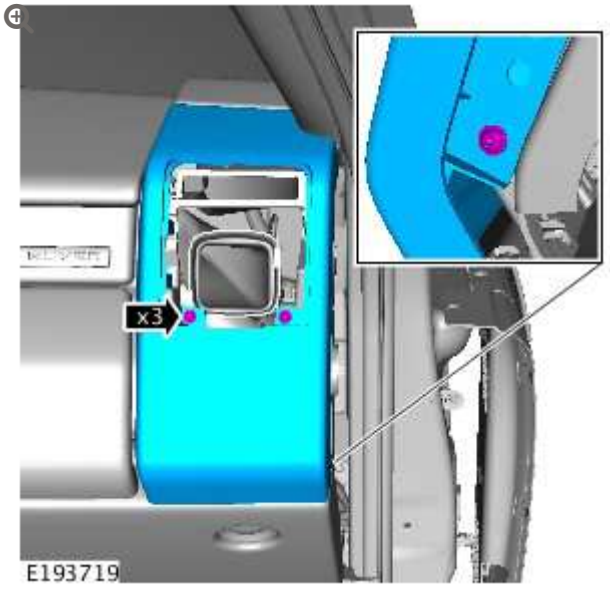

- Install the side register trim panel.
- Install the 3 screws.

25.

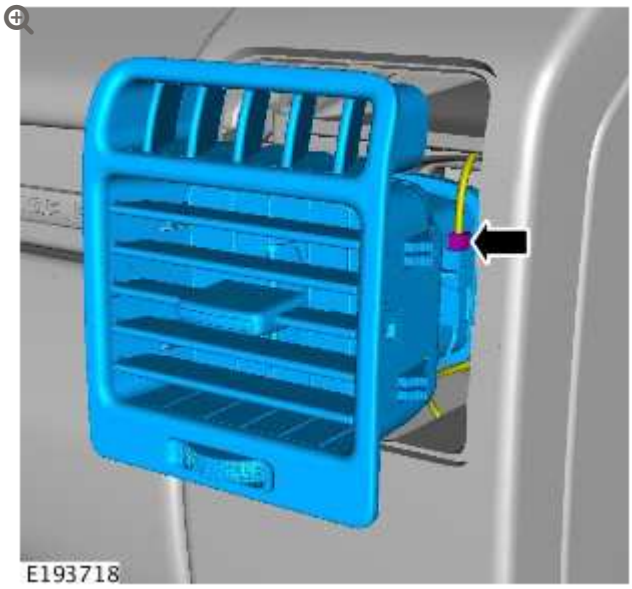

- Install the side register.
- Connect the electrical connector.

26.

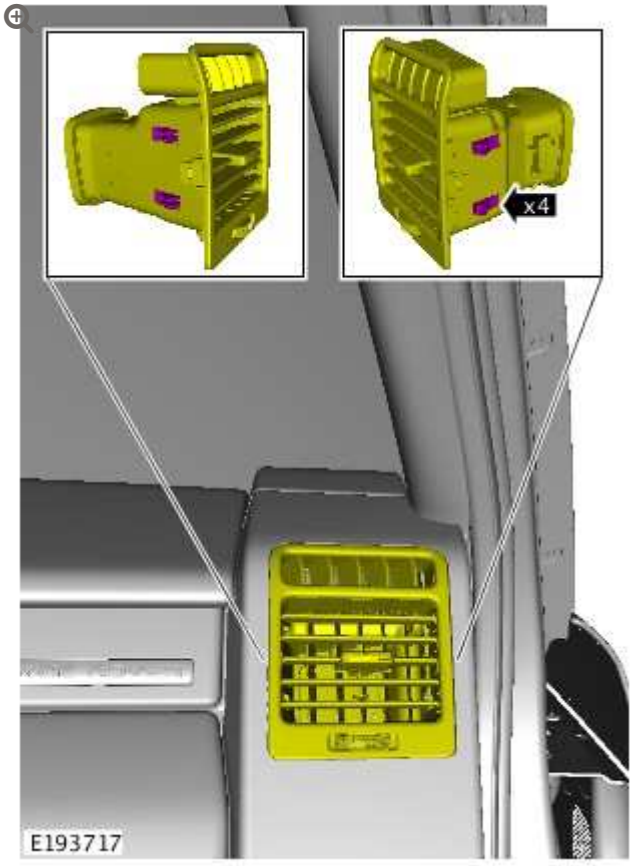

- Position the side register in the correct location.
- Install the 4 clips.

27.

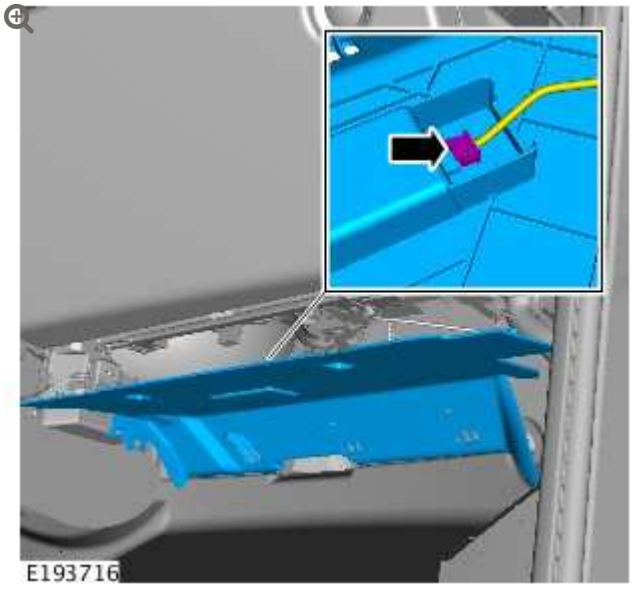

- Install the closing trim panel.

- Connect the electrical connector.

28.

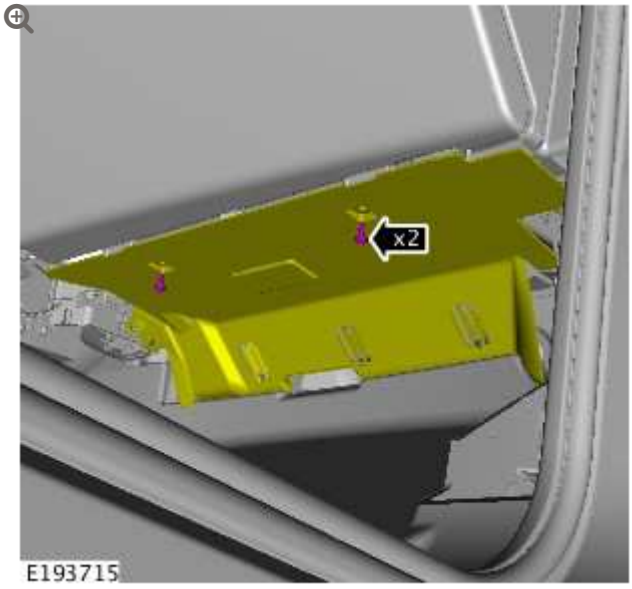

- Position the closing trim panel in the correct location.
- Install the 2 screws.

29.

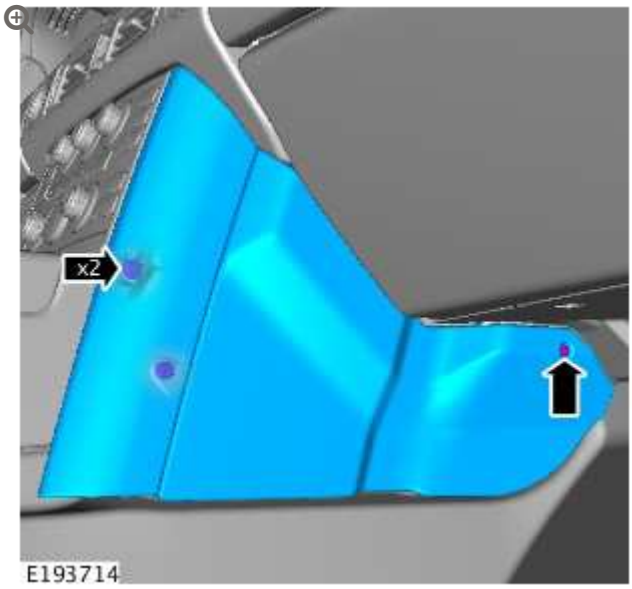

- Install the floor console extension trim panel.
- install the 2 clips.
- Install the screw.

30.



- Install the instrument panel end trim panel.
- Connect the electrical connector.

31.



- Position the instrument panel end trim panel in the correct location.
- Install the 4 clips.

32.

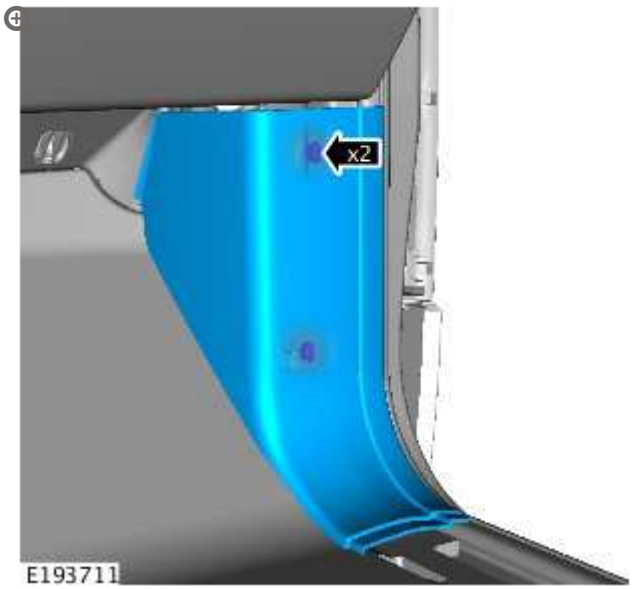

- Install the cowl side trim panel.
- Install the 2 clips.

33.

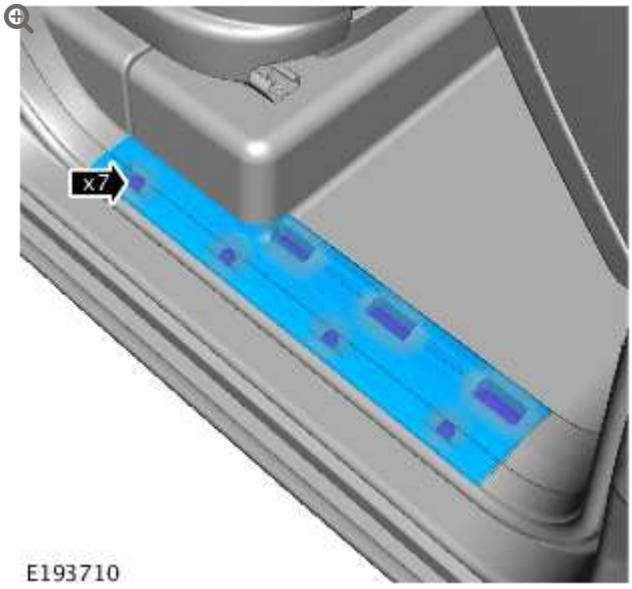

- Install the front scuff plate trim panel.
- Install the 7 clips.

34.

- Connect both battery cables.
  Refer to: Specifications (414-00 Battery and Charging System - General Information, Specifications).

SUPPLEMENTAL RESTRAINT SYSTEM

SIDE AIR BAG MODULE

(G875365)

REMOVAL AND INSTALLATION

76.74.30	AIR BAG - SIDE IMPACT FRONT DOOR - RENEW	ALL DERIVATIVES	0.5	USED WITHINS	+
76.74.31	AIR BAG - SIDE IMPACT - FRONT SEAT - DRIVERS - RENEW	ALL DERIVATIVES	1.3	USED WITHINS	+

REMOVAL

WARNINGS:

- Persons working on the supplemental restraint system (SRS) must be fully trained and have been issued with the safety guidelines.
- Allow a period of 10 minutes to elapse after disconnecting the battery before undertaking any work on the SRS.
- The SRS electrical connectors are unique. DO NOT force, or attempt to connect electrical connectors to the wrong sockets.
- The correct procedures must always be used when working on SRS components.
- It is imperative that before any work is undertaken on the SRS system, the appropriate information is read thoroughly.
- Always disconnect both battery cables before beginning work on the SRS system. Disconnect the ground cable first. Never reverse connect the battery.
- Take extra care when handling SRS components.

1. Disconnect the battery ground cable.
   For additional information, refer to: Specifications (414-00, Specifications).

2. Make the air bag supplemental restraint system (SRS) safe.
   For additional information, refer to: Standard Workshop Practices (100-00, Description and Operation).

3. Remove the front door trim panel.
   For additional information, refer to: Front Door Trim Panel (501-05, Removal and Installation).

4. 

   Remove the side air bag module.

   - Disconnect the electrical connector.
   - Remove and discard the 3 bolts.

INSTALLATION

1. Install the side air bag module.
   - Tighten the 3 new bolts to 9 Nm (7 lb.ft).
   - Connect the electrical connector.

2. Install the front door trim panel.
   For additional information, refer to: Front Door Trim Panel (501-05, Removal and Installation).

3. Connect the battery ground cable.
   For additional information, refer to: Specifications (414-00, Specifications).

SUPPLEMENTAL RESTRAINT SYSTEM

SIDE AIR CURTAIN MODULE (G1239682)

REMOVAL AND INSTALLATION

76.74.41	SIDE AIR CURTAIN - BOTH SIDES - RENEW	ALL DERIVATIVES	6.8	USED WITHINS	+

REMOVAL

WARNINGS:

- Persons working on the supplemental restraint system (SRS) must be fully trained and have been issued with the safety guidelines.
- Allow a period of 10 minutes to elapse after disconnecting the battery before undertaking any work on the SRS.
- The SRS electrical connectors are unique. DO NOT force, or attempt to connect electrical connectors to the wrong sockets.
- The correct procedures must always be used when working on SRS components.
- It is imperative that before any work is undertaken on the SRS system, the appropriate information is read thoroughly.
- Always disconnect both battery cables before beginning work on the SRS system. Disconnect the ground cable first. Never reverse connect the battery.
- Take extra care when handling supplemental restraint system (SRS) components.

NOTE:

Removal steps in this procedure may contain installation details.

1. Disconnect the battery ground cable.
   Refer to: Specifications (414-00, Specifications).

2. Make the air bag supplemental restraint system (SRS) safe.
   Refer to: Standard Workshop Practices (100-00, Description and Operation).

3. Refer to: Headliner (501-05, Removal and Installation).

4. **NOTE:**

Right-hand shown, left-hand similar.

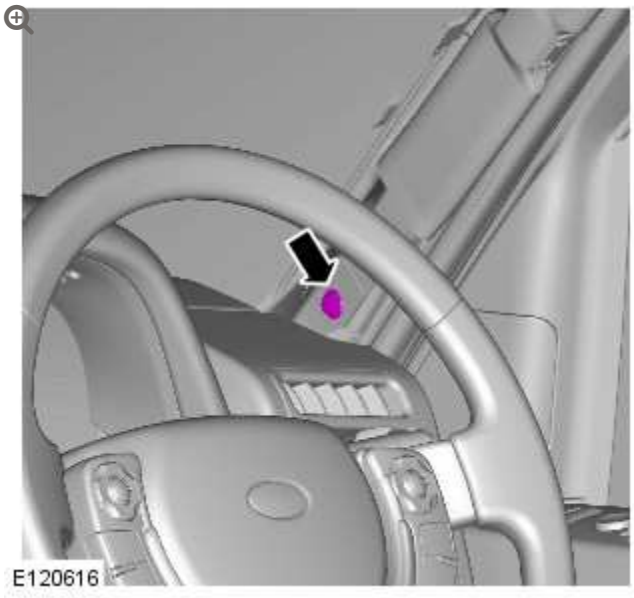

Torque: **6 Nm**

5. **NOTES:**

- Right-hand shown, left-hand similar.
- When installing the side air curtain module, make sure that the tether is tucked under the bracket.

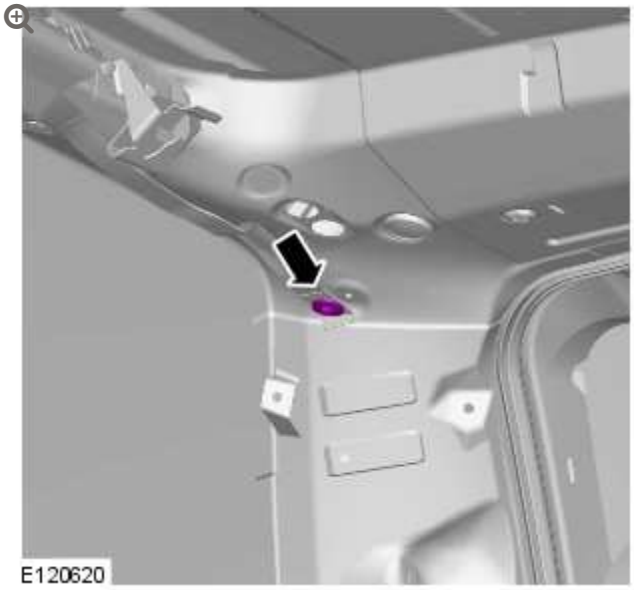

Torque: **6 Nm**

6.

NOTE:

Right-hand shown, left-hand similar.

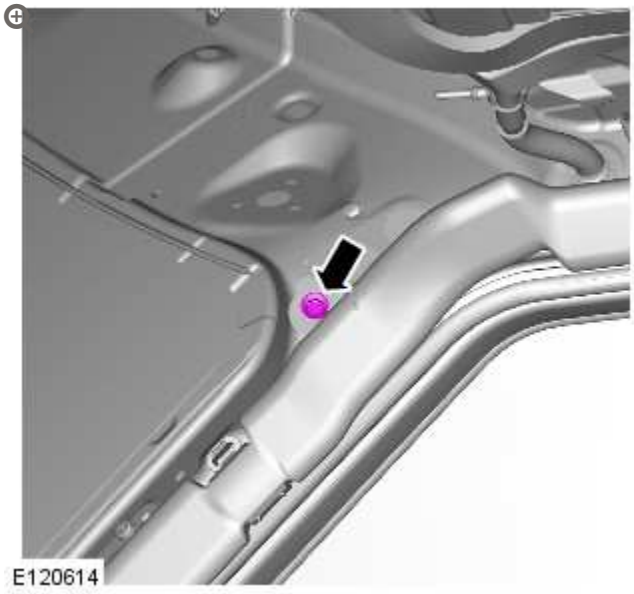

Torque: **6 Nm**

7.

NOTE:

Right-hand shown, left-hand similar.

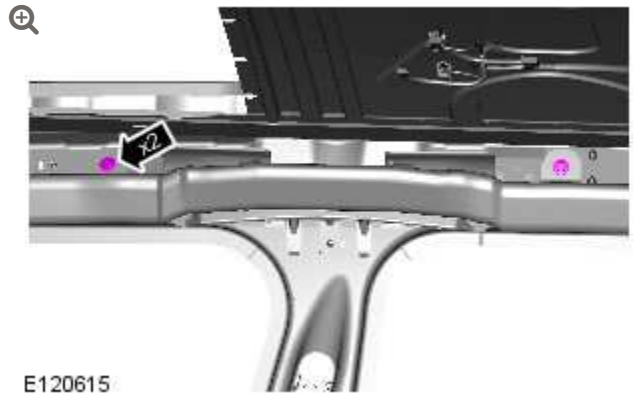

Torque: **6 Nm**

8.

NOTE:

Right-hand shown, left-hand similar.

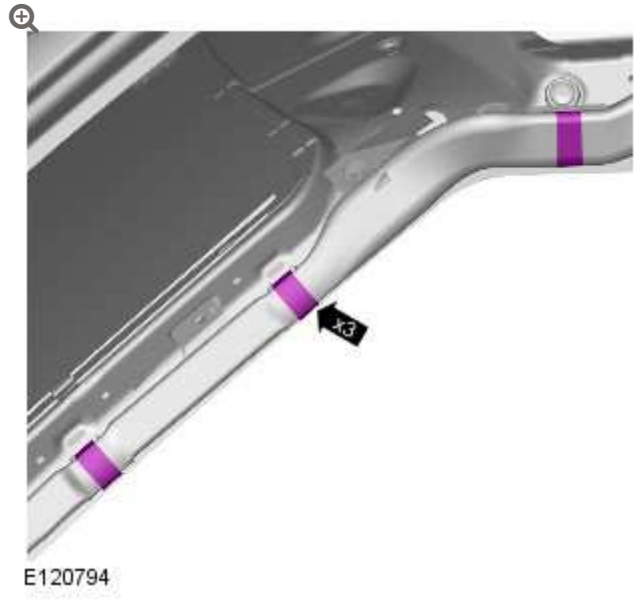

9.

NOTE:

Right-hand shown, left-hand similar.

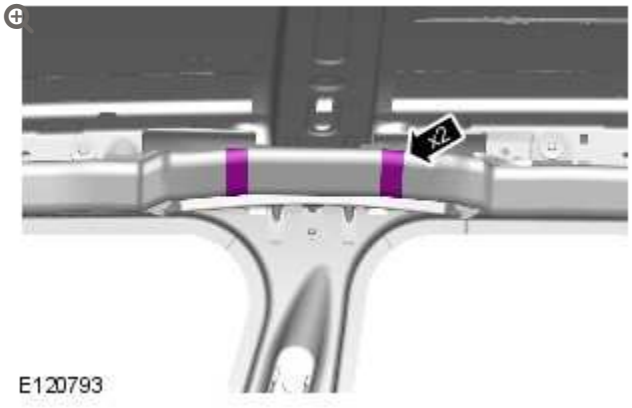

10.

WARNING:

Take extra care when handling supplemental restraint system (SRS) components.

CAUTION:

Do not allow the side air curtain module to twist. Failure to follow this instruction may result in damage to the component.

NOTE:

Right-hand shown, left-hand similar.

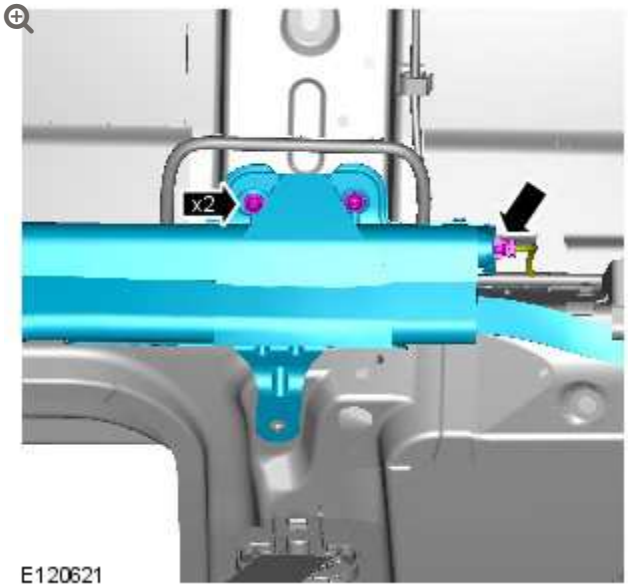

Torque: **8 Nm**

11. **NOTES:**

- Right-hand shown, left-hand similar.
- If the side air curtain module has deployed, new retaining brackets must be installed.
- When installing the side air curtain module, make sure that the component is tucked under the bracket.

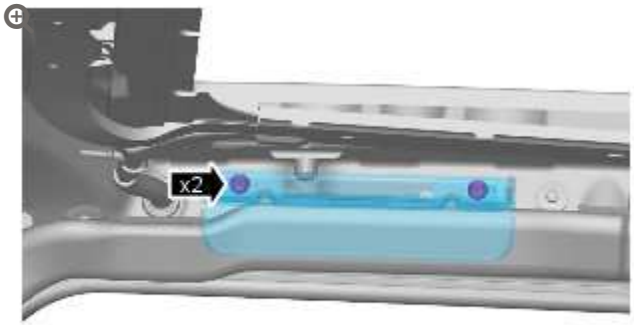

Torque: **9 Nm**

12. **NOTES:**

- Right-hand shown, left-hand similar.
- If the side air curtain module has deployed, new retaining brackets must be installed.
- When installing the side air curtain module, make sure that the component is tucked under the bracket.

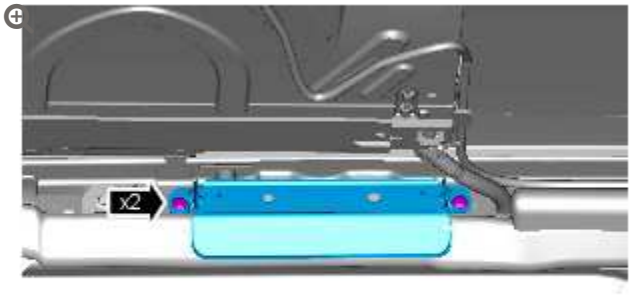

E120617

Torque: **9 Nm**

INSTALLATION

1. To install reverse the removal procedure.

2012.0 RANGE ROVER (LM), 501-20

SUPPLEMENTAL RESTRAINT SYSTEM

DESCRIPTION AND OPERATION

COMPONENT LOCATIONS – SHEET 1 OF 2

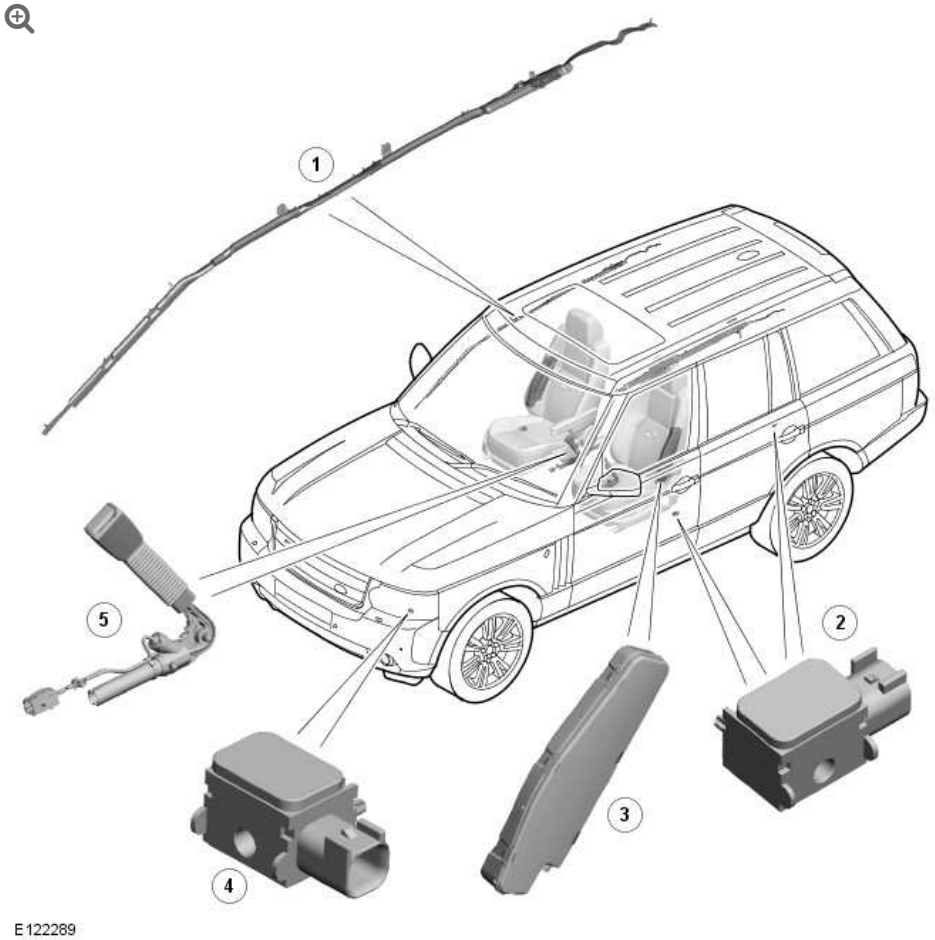

ITEM	DESCRIPTION

ITEM	DESCRIPTION
1	Side head air bag
2	Side impact sensors
3	Side air bag
4	Front impact sensors
5	Pretensioners

COMPONENT LOCATIONS – SHEET 2 OF 2

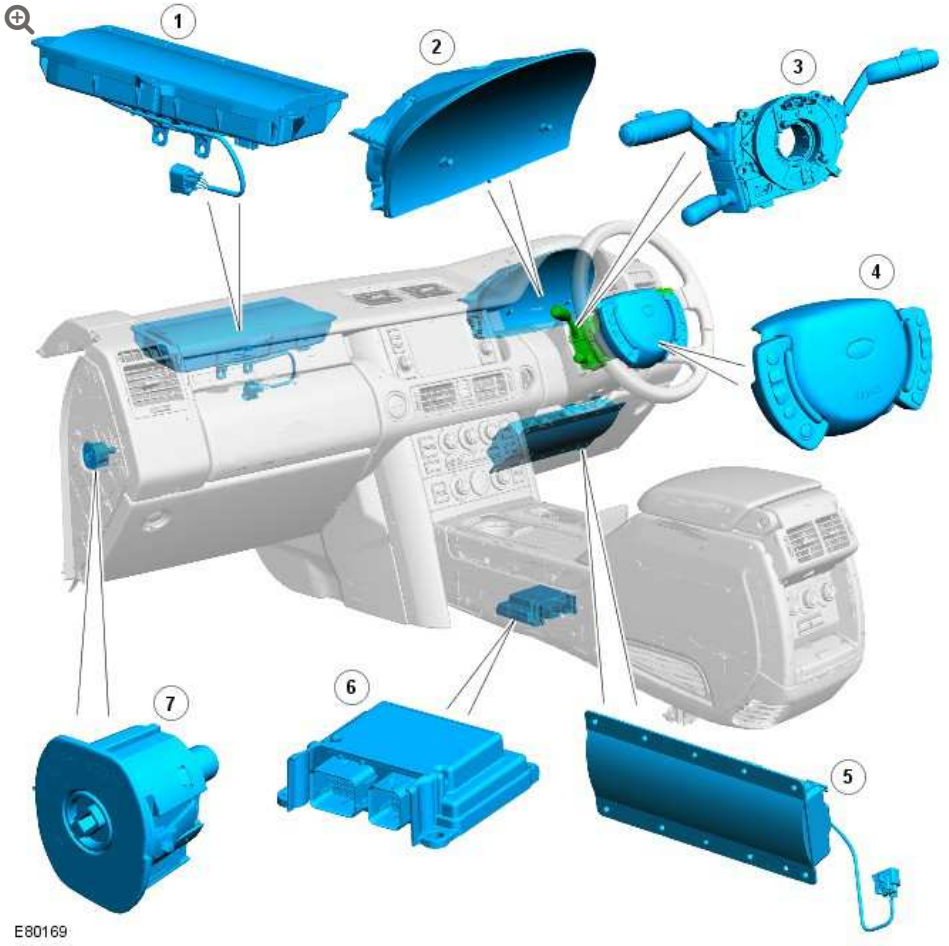

ITEM	DESCRIPTION
1	Passenger air bag
1	Instrument cluster
3	Clock spring

ITEM	DESCRIPTION
4	Driver air bag
5	Knee airbag
6	restraints control module (RCM)
7	Passenger airbag deactivation switch

OVERVIEW

WARNING:

All pyrotechnic devices are dangerous. Before performing any procedures on any pyrotechnic device, read all information contained within the Standard Workshop Practices section of this manual.
For additional information, refer to: Standard Workshop Practices (100-00, Description and Operation).

The supplemental restraint system (SRS) activates pretensioners and/or air bags if the vehicle suffers an impact above preset limits. When it activates the pretensioners/air bags the SRS also disconnects the starter lead from the battery. The SRS consists of:

- An RCM
- Four side impact sensors
- An occupancy sensor(NAS (north American specification) only)
- An occupancy sensor module (NAS (north American specification) only)
- Safety belt switches
- Safety belt pretensioners
- A driver air bag

- A passenger air bag
- Side air bags
- Head air bags
- A clockspring
- A warning lamp
- A driver knee bolster airbag
- A belt minder sensor
- A passenger airbag deactivation switch (Not NAS and Australia)
- A passenger airbag deactivation indicator (not Australia).

The SRS features selective activation of the air bags and pretensioners, and two stage driver and passenger air bags. The driver and passenger air bags each have two gas generators which are fired sequentially, with a variable time delay between firings to adjust the speed of air bag inflation to the severity of the crash impact.

R C M

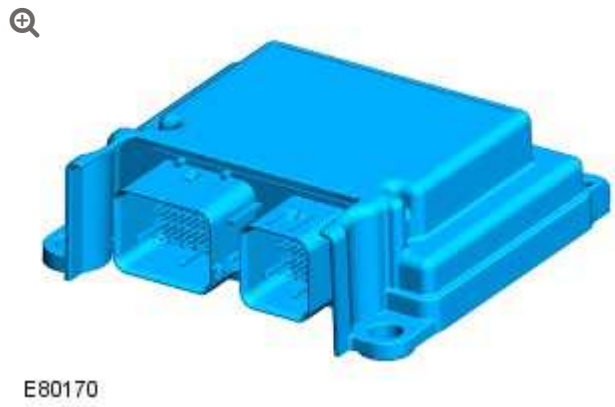

The RCM is installed on the top of the transmission tunnel, beneath the transmission gear selector lever assembly, and controls the operation of the SRS. The main functions of the RCM include:

- Crash detection and recording.
- Air bag and pretensioner firing.
- Self test and system monitoring, with status indication via the warning lamp and non-volatile storage of fault information.

WARNING:

> The electrical connectors must not be connected to the restraints control module unless it is properly secured to the vehicle. Movement of the restraints control module while connected to the vehicle wiring could cause air bag deployment.

A safing function is provided by accelerometers in the RCM to concur impacts. Various firing strategies are employed by the restraints control module to ensure the air bags/pretensioners that are fired are appropriate to the severity and direction of the impact. The firing strategy used also depends on the inputs from the safety belt buckle switches, seat position sensor, passenger air bag deactivation switch, and the occupant classification sensor, dependant on market.

An energy reserve in the RCM ensures there is always a minimum of 150 milliseconds of stored energy available if the power supply from the ignition switch is disrupted during a crash. The stored energy is sufficient to produce firing signals for the driver air bag, the passenger air bag and the safety belt pretensioners.

When the ignition is switched on the RCM performs a self test and then performs cyclical monitoring of the system. If a fault is detected the RCM stores a related fault code and sends the signal to illuminate the air bag warning indicator. The faults can be retrieved by the Land Rover approved diagnostic system via the high speed controller area network (CAN) bus connection (J1962). If a fault that

could cause a false fire signal is detected, the RCM disables the respective firing circuit, and keeps it disabled during a crash event.

IMPACT SENSORS

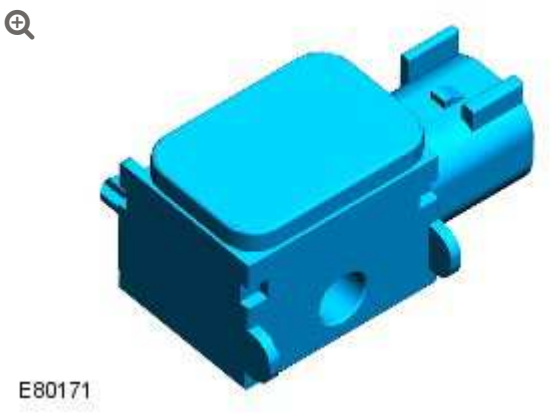

Impact sensors are installed in the front and both sides of the vehicle. The use of multiple impact sensors provides shorter air bag trigger times, through faster detection of lateral and longitudinal acceleration, and improves detection accuracy.

There are two front impact sensors, attached to the headlamp surround panel below the headlamps.

There are four side impact sensors located in the passenger compartment, as follows:

- One attached to the base of each B/C pillar
- One attached to the base of each D pillar.

Each impact sensor incorporates an accelerometer and a microchip powered by a feed from the RCM. The power feed also provides the interface connection through which the side impact sensor communicates with the RCM using serial data messages. Acceleration is evaluated by the microchip and transmitted to the restraints control module, which then makes the decision on whether or not to activate the air bags and pretensioners.

When the ignition is switched on the RCM supplies power to the impact sensors, which perform a self test. After satisfactory self tests the impact sensors continually output 'digital acceleration' messages to the restraints control module. If a fault is detected the relevant impact sensor sends a fault message, instead of the digital acceleration message, to the restraints control module. The RCM then stores a related fault code and illuminates the air bag warning indicator. Faults can be retrieved by the Land Rover approved diagnostic system from the RCM via the high speed CAN bus connection (J1962).

PASSENGER AIR BAG DEACTIVATION SWITCH (ALL EXCEPT NAS AND AUSTRALIA)

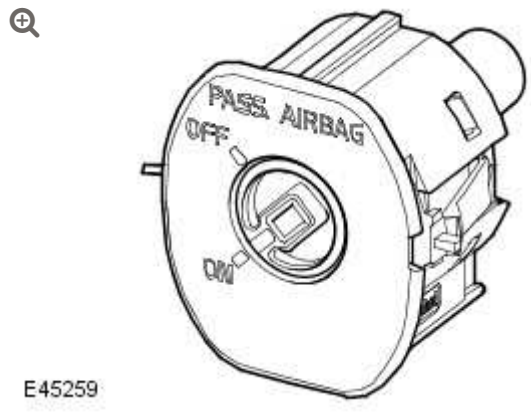

The passenger air bag deactivation switch provides a method of manually disabling the passenger air bag. The switch is installed in the front passenger end of the instrument panel and operated by the ignition key.

When the passenger air bag deactivation switch is operated, it changes a ground connection between two pins in the connectors of the RCM. When the passenger air bag deactivation switch is selected to OFF, the RCM disables the passenger air bag and, if the front passenger seat is occupied, illuminates the passenger air bag deactivation indicator.

PASSENGER AIR BAG DEACTIVATION INDICATOR (ALL EXCEPT AUSTRALIA)

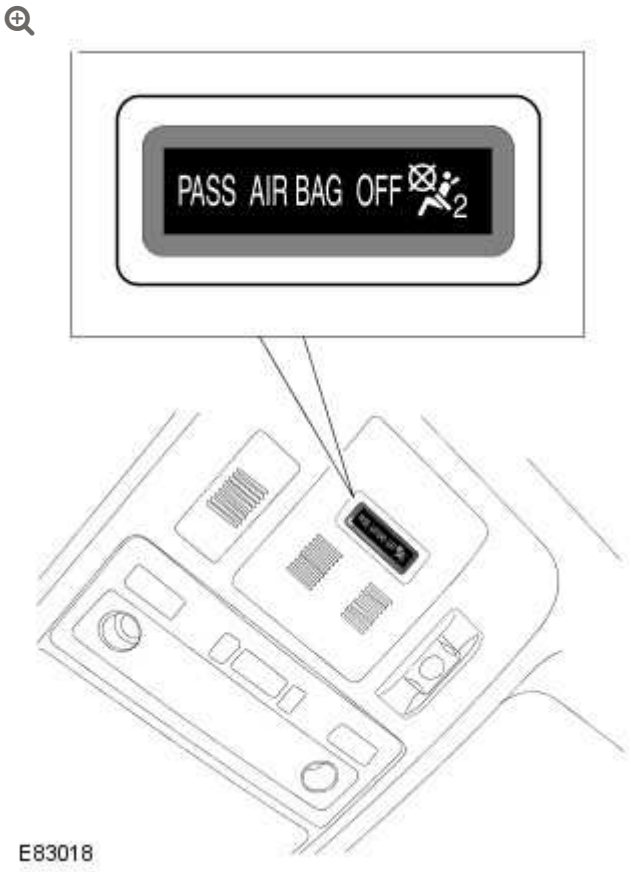

The passenger air bag deactivation indicator is installed in the overhead console (on the header rail). When appropriate, the indicator illuminates to advise front seat occupants that the passenger air bag is disabled. Operation of the indicator is controlled by the RCM. The RCM illuminates the indicator when:

- There is a fault with the passenger air bag firing circuit(s) that warrants disablement
- The passenger air bag is deactivated with the passenger air bag deactivation switch (where fitted)
- The occupant classification sensor sends a passenger air bag disable state.

SEAT POSITION SENSOR

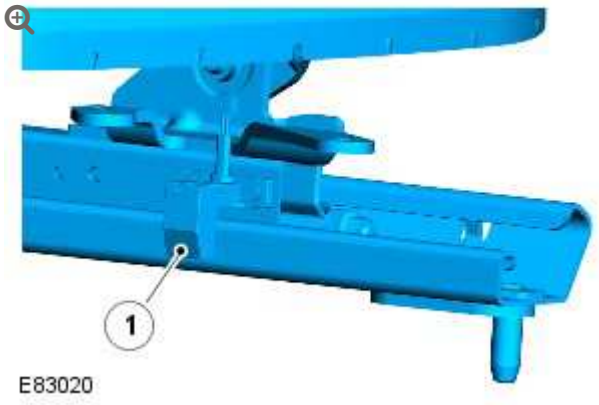

ITEM	DESCRIPTION
1	Seat position sensor

The seat position sensor allows the RCM to detect when the driver seat is forward of a given point on the seat track. The seat position sensor consists of a Hall effect sensor attached to the driver seat frame. While the ignition is on, the RCM supplies the sensor with power, and monitors the return current. When the seat frame moves forwards, the sensor moves over the edge of the seat track, which changes the reluctance of the sensor. The change of current is detected by the RCM and used as a switching point. The switching point is when the center of the sensor is 3 ± 4 mm from the leading edge of the seat track.

When the driver seat is forward of the switching point, the RCM increases the time delay between firing the two stages of the inflator in the driver air bag. When the driver seat is rearward of the switching point, the RCM uses the normal time delay between firing the two stages.

OCCUPANT MONITORING

There are two types of occupant monitoring:

- In all markets except NAS & Australia, vehicles have an occupant detection sensor
- In NAS markets, vehicles have an occupant classification system

For markets which have an occupant detection sensor, this has no interface with the restraints system and only provides the belt reminder function.

For markets that have an occupant classification system, this provides the RCM with the occupancy status of the front passenger seat. The restraints control module uses this and the seat buckle status in the evaluation of the firing strategy for the passenger front air bag, side air bag, and pretensioner.

SAFETY BELT SWITCHES

A safety belt switch is installed in the buckle of each front safety belt to provide the RCM with a status signal of the related safety belt(s). When the safety belt is unfastened the switch outputs a low current to the RCM. When the safety belt is fastened the switch outputs a high current to the RCM.

OCCUPANCY SENSOR

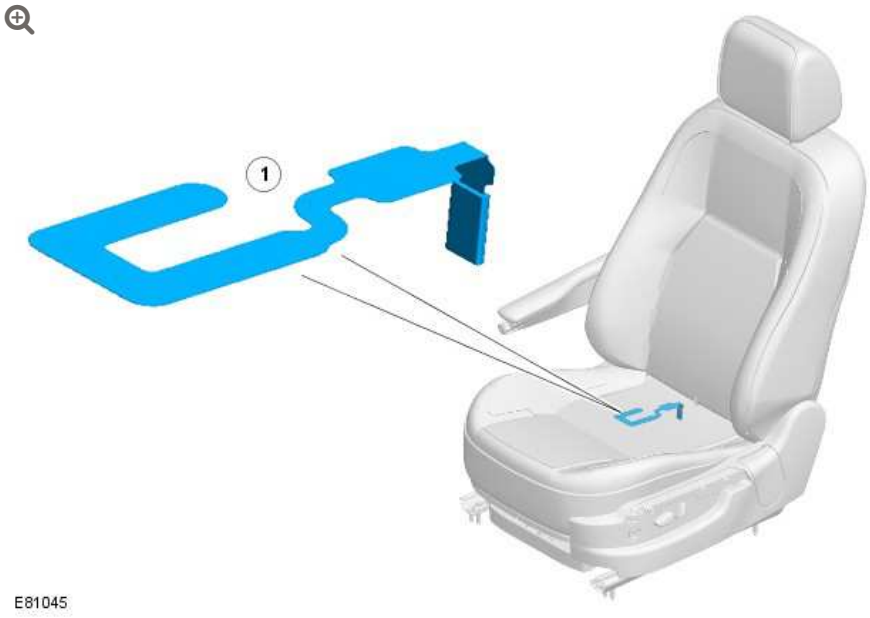

ITEM	DESCRIPTION
1	Seat occupancy sensor

The occupancy sensor is installed in the cushion of the front passenger seat between the foam padding and the cover. The sensor consists of a foil contact circuit, embedded in a plastic sheet. Weight on the sensor reduces the resistance of the circuit. The occupancy sensor is directly connected to the instrument cluster and has no input into the SRS.

OCCUPANT CLASSIFICATION SYSTEM



ITEM	DESCRIPTION
1	Belt tension sensor
2	Pressure pad
3	Occupant classification system control module

The occupant classification system can determine if the front passenger seat is unoccupied, occupied by a small person, or occupied by a large person. The occupant classification system consists of:

- A pressure pad, installed under the cushion of the front passenger seat, which is connected to a pressure sensor
- A safety belt tension sensor, integrated into the anchor point of the front passenger safety belt
- An occupant classification module, installed under the front passenger seat.

The pressure pad is a silicone filled bladder. Any load on the pressure pad is detected by the pressure sensor.

The safety belt tension sensor is a strain gauge that measures the load applied by the safety belt anchor to the anchor bolt. The sensor is located in the lower safety belt anchor point.

Safety Belt Tension Sensor



The occupant classification module supplies a reference voltage to the pressure sensor and the safety belt tension sensor and, from the returned signals, measures the loads acting on the pressure pad and the safety belt tension sensor. The load measurement from the safety belt tension sensor is used to produce a correction factor for the load measurement from the pressure pad. The tightness of the safety belt affects the load acting on the pressure pad, so without the correction factor the occupant classification module cannot derive an accurate occupancy status.

The occupant classification module translates the load readings into a seat occupancy status and transmits the result to the RCM, on a dedicated high speed CAN bus link. The occupant classification module incorporates two load limits for the seat cushion: When the load exceeds the lower limit, but is less than the upper limit, the occupant is classified as small; when the upper limit is exceeded, the occupant is classified as large.

The occupant classification system has 4 possible states which are detailed in the following table.

CLASSIFICATION	SEAT STATUS	PASSENGER AIRBAG STATUS	AIRBAG INDICATOR STATUS
Empty	Empty	Disabled	Off
Occupied inhibit	The seat is occupied by a small person or child restraint is being used	Passenger air bag/Thorax airbag operation is disabled	On
Occupied allow	The seat is occupied by a large person	Passenger air bag/Thorax airbag operation is enabled	Off
Error	-	Passenger air bag/Thorax airbag operation is disabled	On

OCCUPANCY SENSOR MODULE



The occupancy sensor module is installed on the underside of the front passenger seat. The module supplies a power feed to the occupancy sensor and monitors the return voltage to determine if the seat is occupied or not. The result is transmitted to the RCM on the High speed CAN bus. The occupancy sensor module also

monitors for short and open circuits in the occupancy sensor. If it detects a fault, the occupancy sensor module transmits a fault message in place of the status message.

PRETENSIONER

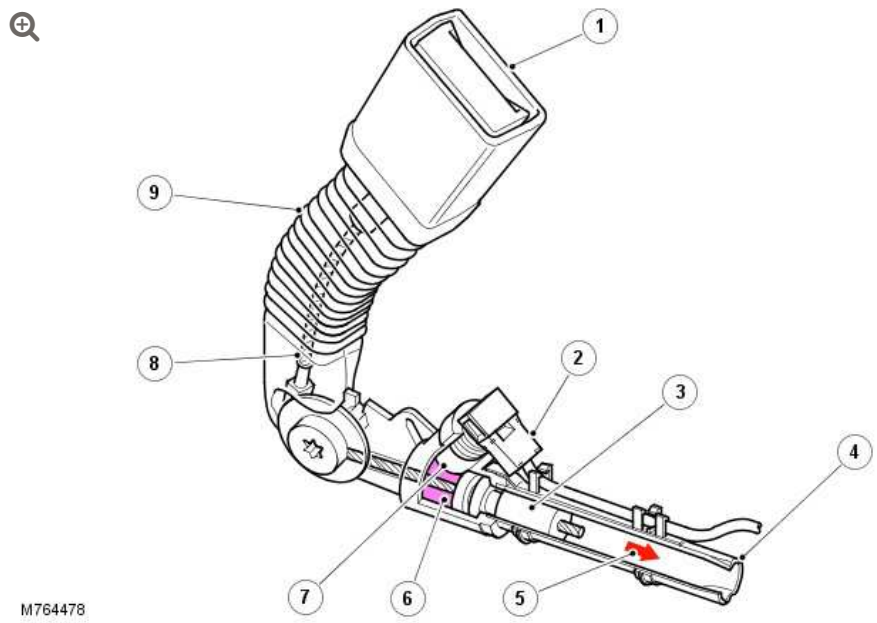

ITEM	DESCRIPTION
1	Safety belt buckle
2	Electrical connector
3	Piston
4	Piston housing
5	Direction of piston travel
6	Expanding gas
7	Squib/Gas generator
8	Steel cable
9	Gaiter

The pretensioners are used to tighten the front safety belts during a collision to ensure the occupants are securely held in their seats. A

pretensioner is integrated into each front safety belt buckle and attached to a bracket on the inboard side of the seat.

Each pretensioner has a tube containing propellant and a piston. The piston is attached to a steel cable, the opposite end of which is attached to the safety belt buckle. A squib in the base of the tube provides an ignition source when triggered by a fire signal from the RCM.

On receipt of a fire signal from the RCM, the squib ignites the propellant. The propellant produces nitrogen gas that rapidly expands to drive the piston along the tube, pulling the cable and drawing the buckle downwards.

DRIVER AIR BAG

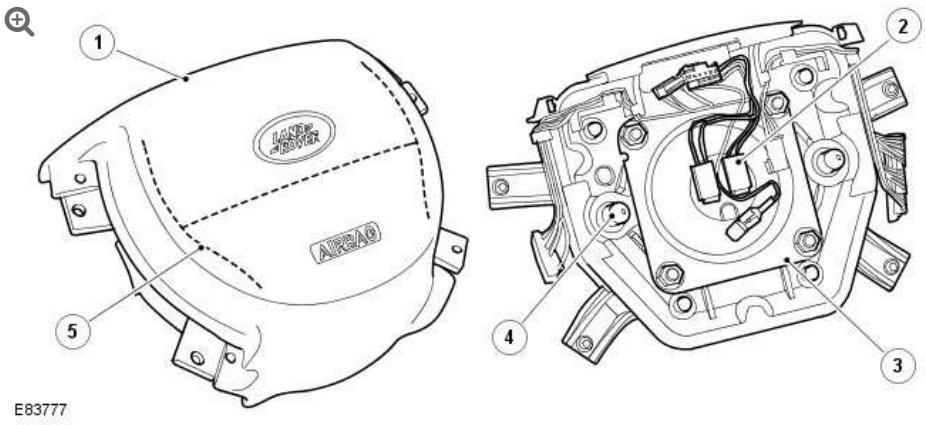

ITEM	DESCRIPTION
1	Cover
2	Electrical connector
3	Housing
4	Securing pins
5	Etched lines

The driver air bag forms the center pad of the steering wheel. Four pins and two latches locate and secure the driver air bag to the steering wheel. The latches consist of wire springs on each side of the driver air bag which engage with hooks in the steering wheel. The driver air bag is released from the steering wheel by pulling on the wire springs with a special tool inserted through a slot on each side of the steering wheel hub. Springs on the locating pins then push the driver air bag away from the steering wheel.

The driver air bag has a two stage inflator, with separate electrical connectors for each stage. The inflator contains a non-azide propellant as the gas generator.

Lines molded into the inner surface of the driver air bag cover provide weak points that split open in a controlled manner when the driver air bag deploys. The inflated volume of the air bag is 57 liters (2.01 ft3).

PASSENGER AIR BAG



The passenger air bag is located in the instrument panel, behind the upper glove compartment. The bottom of the passenger air bag is attached to a mounting bracket on the in-vehicle crossbeam. The top of the passenger air bag is attached to a re-enforcement lid in the top of the instrument panel. The reinforcement lid incorporates a

single door that opens, splitting the instrument panel covering, when the air bag deploys.

The passenger air bag is grounded through an earth track and the module's connection to the in-vehicle crossbeam.

The air bag has a two stage inflator, with separate electrical connectors for each stage. The inflator contains a non-azide propellant as the gas generator in each stage. The inflated volume of the air bag is 121 liters (4.27 ft3)."

SIDE AIR BAG



A side air bag is attached to the outside of each front seat backrest frame, under the backrest cover.

The side air bags are handed, and each consist of a molded plastic case which contains the folded air bag and the inflator. A cable connects the igniter of the inflator to a connector in the main seat harness connector block located under the front edge of the seat cushion.

When the air bag deploys it forces the front edge of the molded plastic case apart and splits open the backrest cover.

The side air bags use compressed argon as the inflation medium. The inflated volume of each side air bag is 12 liters (0.42 ft3).

SIDE HEAD AIR BAGS



The side head air bags are installed between the A and D pillar trims and above the outer edges of the headlining. The inflatable bags incorporate tether straps at each end which are attached to the body. When the air bag deploys, the inflating bag shortens in length and pulls on the tether straps, which forces it from behind the trim to cover the window in a straight line between the tether strap anchor points.

KNEE AIRBAG

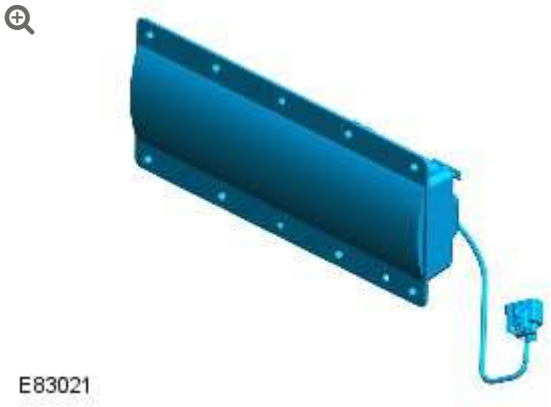

The inflatable knee bolster air bag is located behind the driver's knee bolster panel below the steering column. The flanges of the inflatable knee bolster air bag are attached to a re-enforcement lid in the driver knee bolster panel. The re-enforcement lid incorporates two deployment doors that are forced open, splitting the instrument panel covering, when the air bag deploys.

An EPC connector attaches a ground to the inflatable knee bolster air bag.

The inflatable knee bolster air bag has a single stage inflator with one connector on the outboard end. The inflator contains a non-azide propellant as the gas generator. The inflated volume of the air bag is 19 liters (0.67 ft3).

AIR BAG WARNING INDICATOR

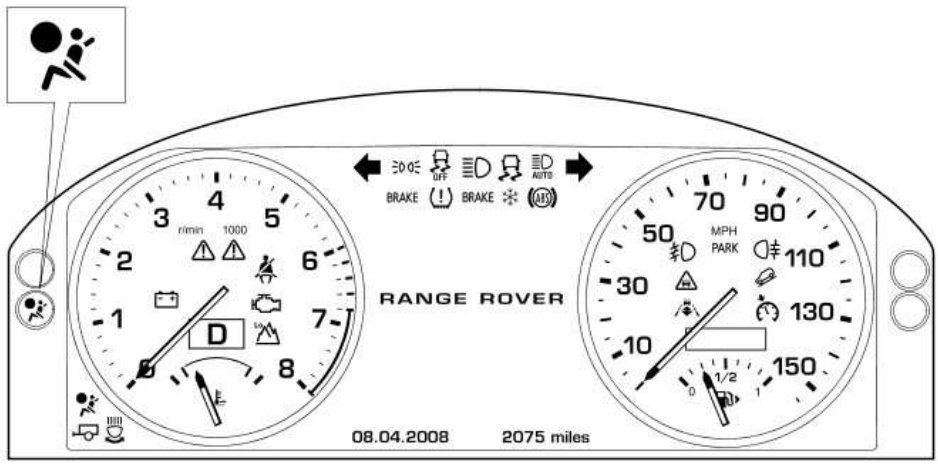

E122290

The air bag warning indicator consists of a yellow light emitting diode (LED) behind a SRS graphic in the instrument cluster.

Operation of the air bag warning indicator is controlled by a high speed CAN bus message from the RCM to the instrument cluster. The RCM sends the signal to illuminate the air bag warning indicator if a fault is detected, and for approximately 6 seconds during the bulb check at the beginning of each ignition cycle.

CLOCKSPRING

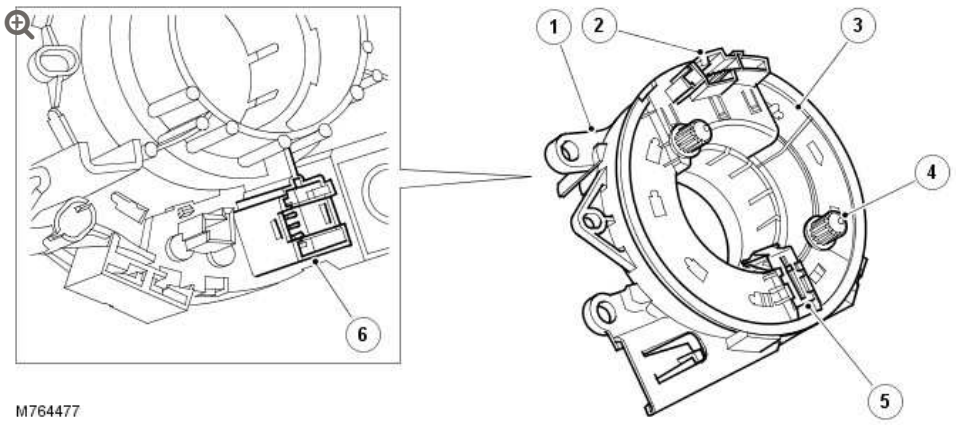

ITEM	DESCRIPTION
1	Outer housing
2	Electrical connector
3	Inner housing
4	Drive spigot
5	Locking lever
6	Electrical connector

The clockspring is installed on the steering column to provide the electrical interface between the fixed wiring harness and the steering wheel. The clockspring provides connections for the driver air bag, horn and steering wheel switch packs.

A rotating link harness is encapsulated into a plastic cassette comprising outer and inner housings with integral connectors. Brackets on the outer housing accommodate the column stalk switches. A spring loaded locking lever attached to the outer housing automatically engages and disengages with the inner housing when the steering wheel is removed and installed. To prevent damage to the rotating link harness, both the steering and the clockspring must be centralized when removing and installing the steering wheel.

SRS OPERATION

In a collision, the sudden deceleration or acceleration is measured by the impact sensors and the accelerometers in the restraints control module. The restraints control module evaluates the readings to determine the impact point on the vehicle and whether the deceleration/acceleration readings exceed the limits for firing any of the air bags, pretensioners, and battery disconnect unit. During a collision, the restraints control module only fires the air bags and pretensioners if the safing function confirms that the data from the impact sensor(s) indicates an impact limit has been exceeded.

The restraints control module incorporates the following impact thresholds to cater for different accident scenarios:

- Front impact, pretensioners
- Front impact, driver and passenger air bags stage 1, belt unfastened
- Front impact, driver and passenger air bags stage 1, belt fastened
- Front impact, driver and passenger air bags stage 2, belt unfastened
- Front impact, driver and passenger air bags stage 2, belt fastened
- Rear impact
- Driver side impact
- Passenger side impact.

The front impact thresholds increase in severity from pretensioners, through to driver and passenger air bag stage 2, belt fastened.

FIRING STRATEGIES

The safety belt pretensioners are fired when the pretensioner impact limit is exceeded. The restraints control module only fires the pretensioners if the related safety belt is fastened.

The driver and passenger air bags are only fired in a frontal impact. If an impact exceeds a stage 1 limit, but is less than the corresponding stage 2 limit, only one inflator in each air bag is fired (stage 2 is still fired for disposal after a delay of 100ms). If an impact exceeds the stage 2 limit, the two inflators in each air bag are fired simultaneously.

The passenger air bag is disabled unless the front passenger seat is occupied by a large person (NAS only), or the passenger air bag deactivation switch is on (all except NAS & AUS).

The stage 2 inflator of the driver air bag is disabled if the driver seat is forward of the switching point of the seat position sensor.

If there is a fault with a safety belt buckle sensor, the restraints control module assumes the related safety belt is fastened for the pretensioner firing strategy and unfastened for the driver and passenger air bag firing strategies. If there is a fault with the occupant classification sensor, the restraints control module disables the passenger air bag. If there is a fault with the passenger air bag deactivation switch, the restraints control module disables the passenger air bag.

If a side impact limit is exceeded, the restraints control module fires the side air bag and the side head air bag on that side of the vehicle. If the side impact limit on the front passenger side of the vehicle is exceeded, the restraints control module also evaluates the input from the occupant classification sensor, and fires the side air bag only if the front passenger seat is occupied by a large person (NAS only).

If multiple impacts occur during a crash event, after responding to the primary impact the restraints control module will output the appropriate fire signals in response to any further impacts if unfired units are available.

Front and Rear Impact Firing Strategy (All Except NAS)

SAFETY BELT STATUS		STRATEGY		
DRIVER	PASSENGER	APPLICABLE PRETENSIONER	DRIVER AIR BAG	PASSENGER AIR BAG
Fastened	-	Fired at pretensioner threshold	Fired at belt fastened threshold	-
Unfastened	-	Not fired	Fired at belt unfastened threshold	-
-	Fastened	Fired at pretensioner threshold	-	Fired at belt fastened threshold
-	Unfastened	Not fired	-	Fired at belt unfastened threshold

Front and Rear Impact Firing Strategy (NAS Only)

SAFETY BELT STATUS		PASSENGER SEAT STATUS	STRATEGY		
DRIVER	PASSENGER		APPLICABLE PRETENSIONER	DRIVER AIR BAG	PASSENGER AIR BAG
Fastened	-	-	Fired at pretensioner threshold	Fired at belt fastened threshold	-
Unfastened	-	-	Not fired	Fired at belt unfastened threshold	-
-	Fastened	Occupied allow	Fired at pretensioner threshold	-	Fired at belt fastened threshold
-	Fastened	Unoccupied inhibit/empty	Fired at pretensioner threshold	-	Not fired
-	Unfastened	Occupied allow	Not fired	-	Fired at belt unfastened threshold

SAFETY BELT STATUS		PASSENGER SEAT STATUS	STRATEGY		
DRIVER	PASSENGER		APPLICABLE PRETENSIONER	DRIVER AIR BAG	PASSENGER AIR BAG
	Unfastened	Unoccupied inhibit/empty	Not fired	-	Not fired

The battery disconnect unit is fired:

- At driver and passenger air bag belt fastened threshold in a frontal impact
- At the driver and passenger side impact threshold in a side impact
- At the rear impact threshold in a rear impact.

CRASH SIGNAL

When the RCM outputs any of the fire signals it also outputs a crash signal to the CJB (central junction box) and the engine control module (ECM) on the High speed CAN. The crash signal is also hardwired to the ECM and the CJB. The instrument cluster picks up the crash signal from the High speed CAN and gateways it to the lighting control module (LCM). On receipt of the crash signal, the CJB goes into a crash mode and the ECM cuts the power supply to the fuel pump relay. In the crash mode, the CJB:

- Activates all of the unlock signals of the vehicle locking system, even if the vehicle is already unlocked.
- Ignores all locking/superlocking inputs until it receives an unlock input, when it returns the locking system to normal operation.
- Activates the interior lamps. The interior lamps remain on permanently until they are manually switched off at the lamp unit, or the CJB crash mode is switched off and they return to normal operation.
- Disables the rear window child lock input until the crash mode is switched off.

- Sends a crash message to the LCM to activate the hazard flashers. The hazard flashers remain on until cancelled by the hazard warning switch or the crash mode is switched off.

The CJB crash mode is switched off by a valid locking and unlocking cycle of the locking system.

CONTROL DIAGRAM SHEET

NOTE:

A = Hardwired; D = High Speed CAN

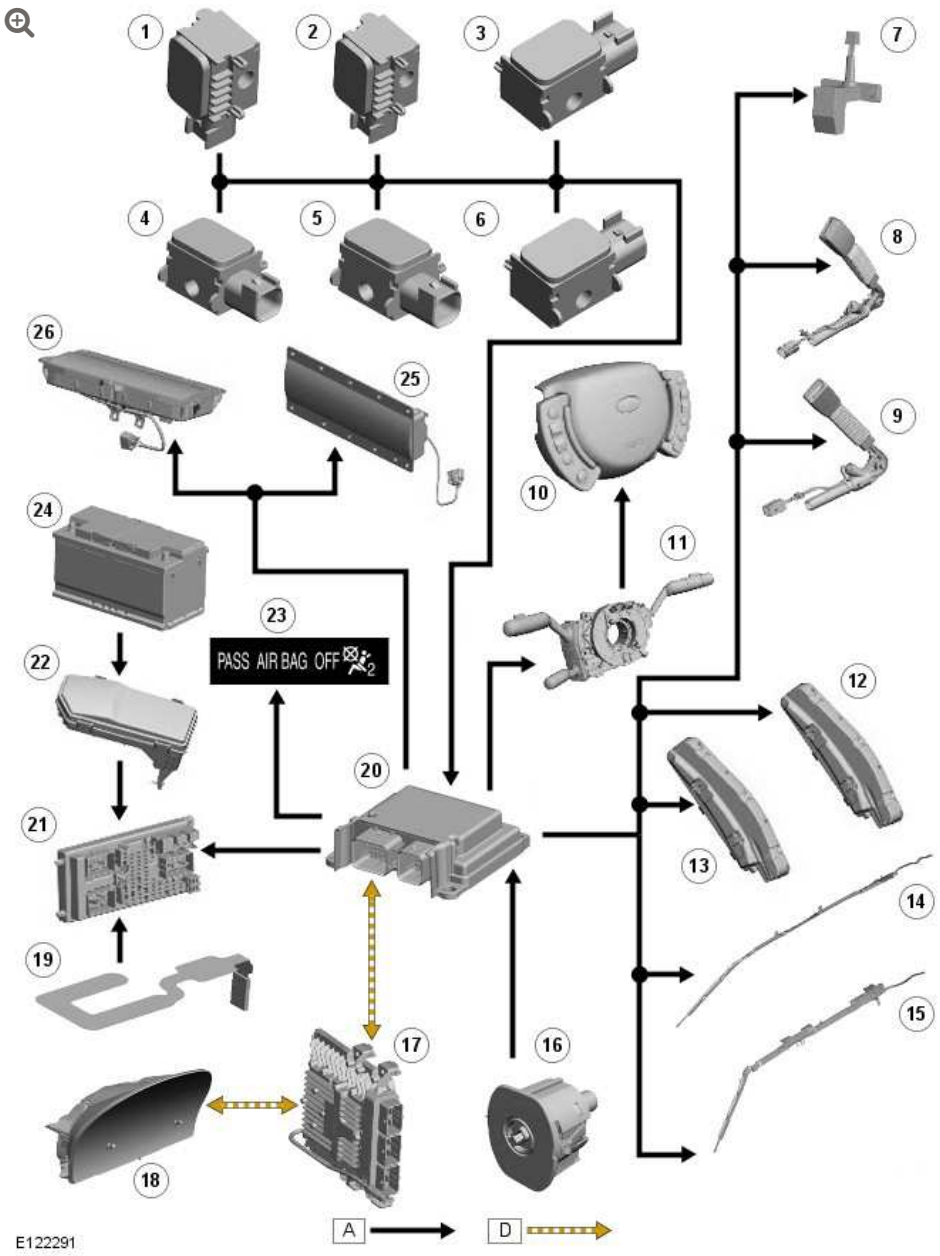

ITEM	DESCRIPTION
1	right-hand (RH) rear side impact sensor
2	left-hand (LH) rear side impact sensor
3	RH front side impact sensor
4	RH front impact sensor
5	LH front impact sensor
6	LH front side impact sensor
7	Seat position sensor

ITEM	DESCRIPTION
8	Safety belt pretensioner
9	Safety belt pretensioner
10	Drivers airbag
11	Clock spring
12	Side airbag
13	Side airbag
14	Head airbag
15	Head airbag
16	Passenger airbag deactivation switch
17	ECM
18	Instrument cluster
19	Occupant detection sensor
20	RCM
21	CJB
22	EJB (engine junction box)
23	Passenger airbag deactivated warning lamp
24	Battery
25	Knee airbag
26	Passenger airbag

SUPPLEMENTAL RESTRAINT SYSTEM

DIAGNOSIS AND TESTING

PRINCIPLE OF OPERATION

For a detailed description of the air bag supplemental restraint system and operation, refer to the relevant Description and Operation section of the workshop manual. REFER to: Air Bag and Safety Belt Pretensioner Supplemental Restraint System (SRS) (501-20 Supplemental Restraint System, Description and Operation).

SAFETY INFORMATION

WARNINGS:

- To avoid accidental deployment the back-up power supply must be depleted before beginning any work on the SRS system or its components. Failure to follow this instruction may result in personal injury.
- Do not use a multimeter to probe an SRS module. It is possible for the power from the meter battery to trigger the activation of the module. Failure to follow this instruction may result in personal injury.

NOTES:

- It is advisable not to use a cellular phone or to have a cellular phone in close proximity when working on the SRS system or components.
- Given the legal implications of a restraints system failure, harness repairs to Air Bag module circuits are not acceptable. Where the text refers to "REPAIR the circuit", this will normally mean the replacement of a harness.

Power supply depletion

Before beginning any work on the SRS system or related components:

1. Remove the ignition key.
2. Disconnect the battery leads, ground first.
3. Wait 2 minutes for the power circuit to discharge.

There are comprehensive instructions on the correct procedures for SRS system repairs in the workshop manual. Refer to the relevant section of the workshop manual.

INSPECTION AND VERIFICATION

CAUTION:

Diagnosis by substitution from a donor vehicle is **NOT** acceptable. Substitution of control modules does not guarantee confirmation of a fault and may also cause additional faults in the vehicle being checked and/or the donor vehicle.

NOTE:

Check and rectify basic faults before beginning diagnostic routines involving pinpoint tests.

1. Verify the customer concern.
    - Confirm the function of the warning lamp (if the warning lamp is inoperative, system faults will be signalled by an audible chime)
2. Visually inspect for obvious signs of mechanical or electrical damage.

Visual Inspection

MECHANICAL	ELECTRICAL
▪ Check for the installation of non-standard accessories which may affect or obstruct the function of the SRS system ▪ Check the condition of trim, etc at the SRS system components ▪ Sensor(s) ▪ Pretensioner(s) ▪ Air bag module(s) ▪ Occupant detection/classification sensors	▪ Fuses ▪ Wiring harness ▪ Make sure all electrical connector(s) are engaged correctly on the air bag circuits ▪ Make sure the Restraints Control Module (RCM) is correctly installed ▪ Warning lamp bulb(s) ▪ Impact sensor(s)

MECHANICAL	ELECTRICAL
▪ Seat position sensor	▪ Buckle sensor(s) ▪ Pretensioner(s) ▪ Air bag module(s) ▪ Air bag deactivation switch ▪ Air bag deactivation warning lamp ▪ Occupant detection/classification sensors ▪ Seat position sensor ▪ Clockspring

3. If an obvious cause for an observed or reported concern is found, correct the cause (if possible) before proceeding to the next step.

4. If the cause is not visually evident, check for Diagnostic Trouble Codes (DTCs) and refer to the relevant DTC Index.

DTC INDEX

For a list of Diagnostic Trouble Codes (DTCs) that could be logged on this vehicle, please refer to Section 100-00. REFER to: (100-00)

Diagnostic Trouble Code (DTC) Index - DTC: Module Name: Restraints Control Module (Description and Operation), Diagnostic Trouble Code (DTC) Index - DTC: Module Name: Occupant Classification System (Description and Operation).

BODY REPAIRS – GENERAL INFORMATION

DESCRIPTION AND OPERATION

Description

Structural adhesive

CAUTION:

When separating a joint treated with metal-to-metal adhesive, it is important to avoid distortion. Heat the joint gradually until the bond weakens sufficiently to allow panel separation. Failure to follow this instruction may result in damage to the vehicle.

NOTE:

When spot welding through metal-to-metal adhesive, take particular care to adjust the transformer setting to make sure the weld is reliable.

Metal-to-metal adhesive is applied to the critical joint areas during factory assembly. The material used is a high-temperature, heat cured, nitrile phenolic which serves to bond two metal surfaces and also to seal the joint against ingress of dust, moisture and fumes. This

material is not suitable for service use and, during repair, should be substituted by an approved Structural Adhesive.

Those joints which require the application of structural adhesive are detailed in the illustrations. Only the joints applicable to the service panels are included. Apply the structural adhesive where indicated or to the mating panel surface.

Expanding foam acoustic seals

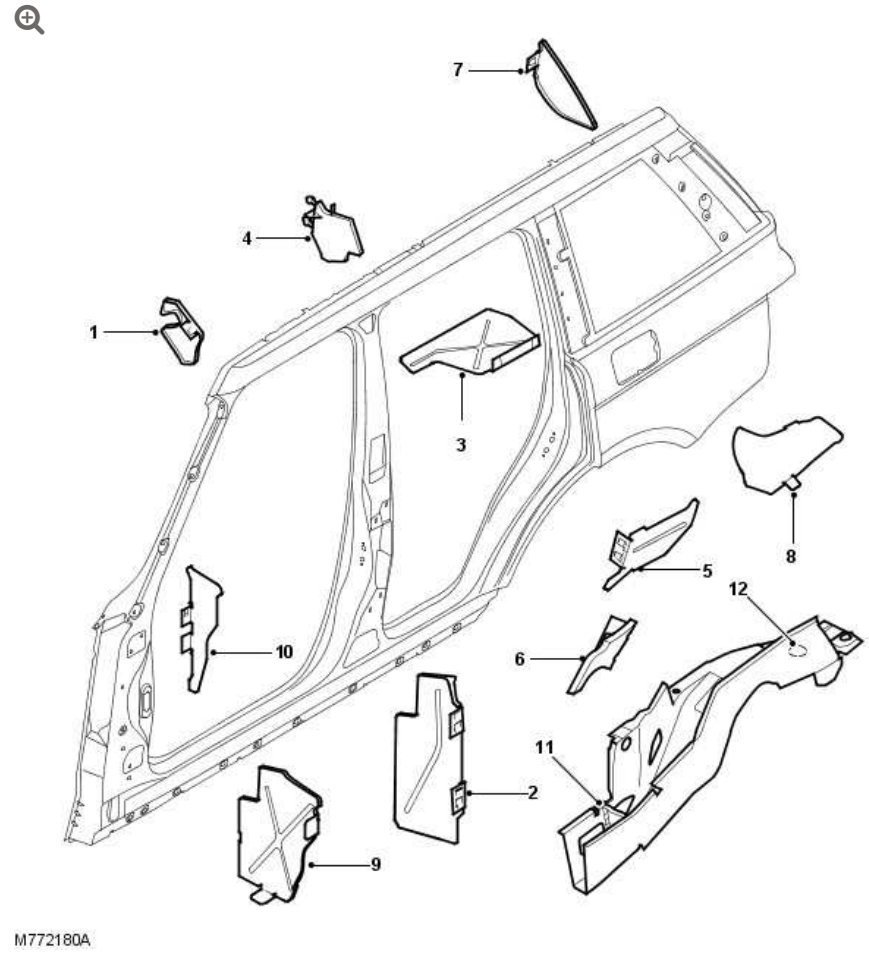

Expanding foam seals numbers 1 to 10 are fitted to various sections of the body side panel, body side closing and the body side panel inner. Seal numbers 11 and 12 are fitted inside the rear longitudinals.

Expanding foam acoustic seals are used in various closed sections of the body to improve vehicle refinement. The seals expand during the

factory paint process, locking them into position. The seals are used in various locations throughout the vehicle.

The main function of the seals is to insulate the cabin from noise, vibration and harshness (NVH).

A secondary function of the seals is to seal the internal sections of the vehicle against the ingress of dust, moisture and fumes.

Another advantage of the seals is that they marginally increase the overall stiffness of the body and its structural performance in case of a collision.

The seals are manufactured from an expandible synthetic rubber, `Betacore 4300`.

All the seals are fitted in the body-in-white areas, and after going through the paint baking process they expand up to eight times their original size.

Replacing seals

As paint oven temperatures used in a repair workshop are lower than those that are used during manufacture of the vehicle, a different process is required to replace the seals in service.

After a repair that involves replacement of a section containing expanded foam, the new section must be injected with an approved sound dampening foam. The sound dampening foam should be injected after paint refinishing and application of cavity wax. When injecting the foam, make sure the foam fills a complete cross section of the cavity.

Structural adhesive to the front side member joints

NOTE:

The front side member joints opposite to those shown are also treated. Apply 3 mm (0.118 inch) beads to all of the joints shown. Make sure all drain points are free from adhesive.

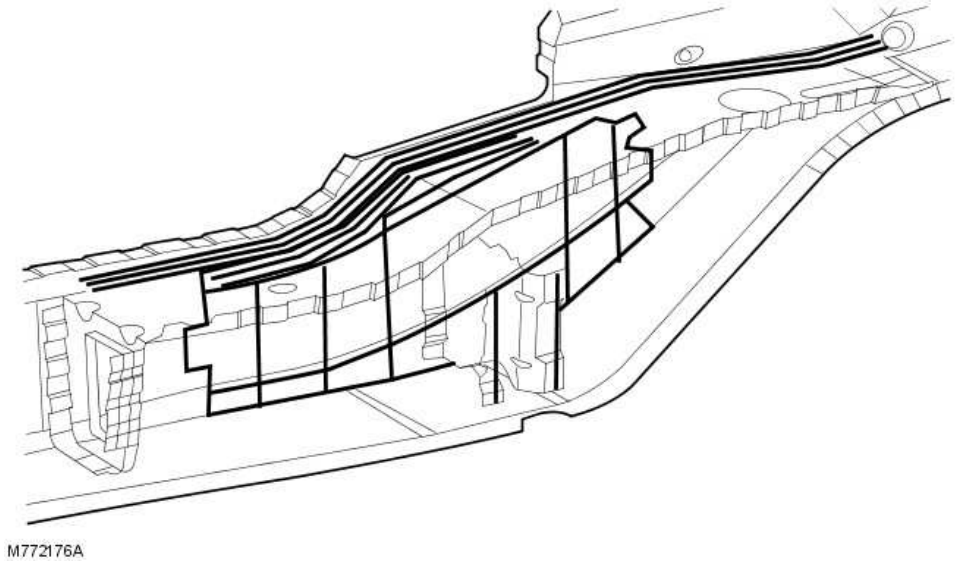

Structural adhesive to the front side member joints

NOTE:

The front side member joints opposite to those shown are also treated. Apply 3 mm (0.118 inch) beads to all of the joints shown. Make sure all drain points are free from adhesive.

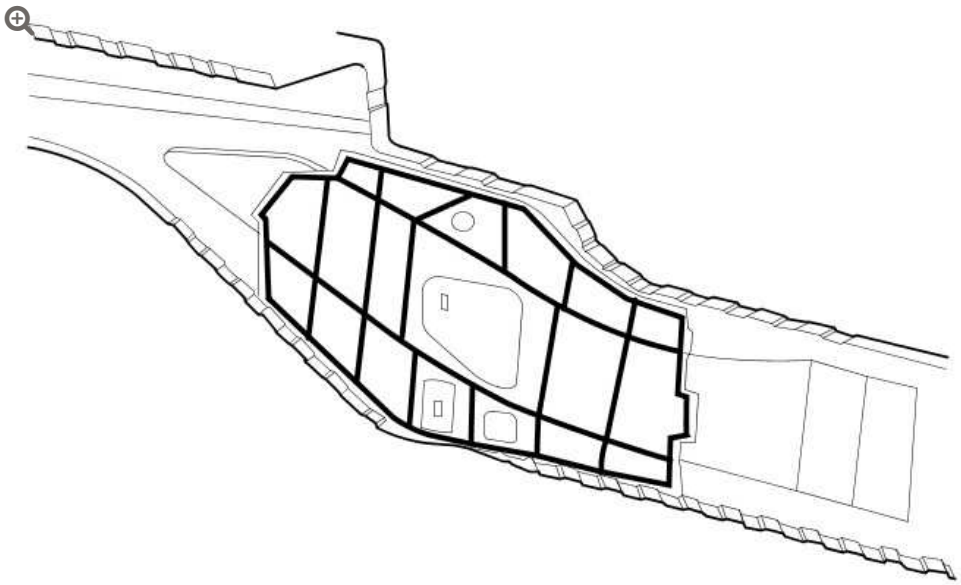

M772177A

Structural adhesive to the fender apron and side panel joints

NOTE:

The fender apron and side panel joints opposite to those shown are also treated. Apply 3 mm (0.118 inch) beads to all of the joints shown. Make sure all drain points are free from adhesive.

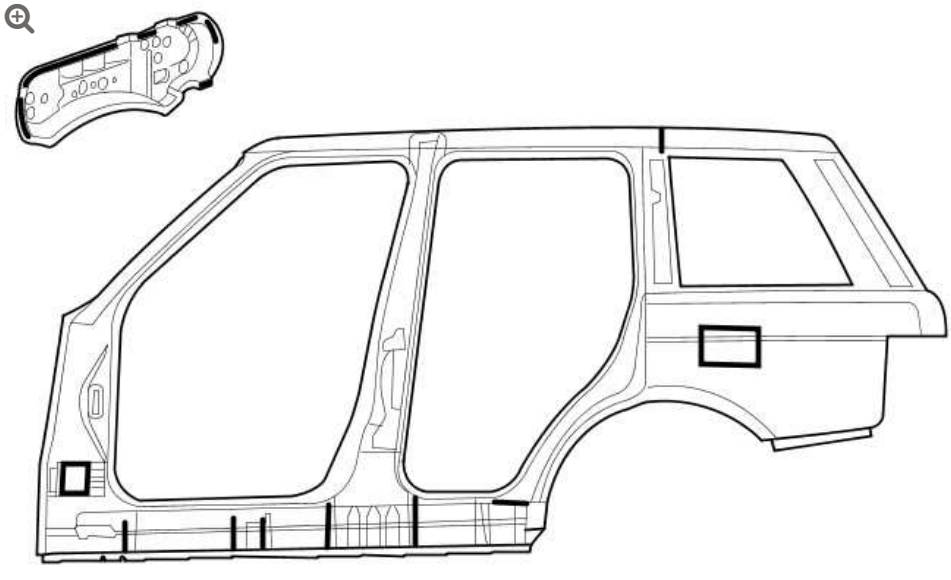

M772178A

Structural adhesive to the side panel inner joints

NOTE:

The side panel inner joints opposite to those shown are also treated. Apply 3 mm (0.118 inch) beads to all of the joints shown. Make sure all drain points are free from adhesive.

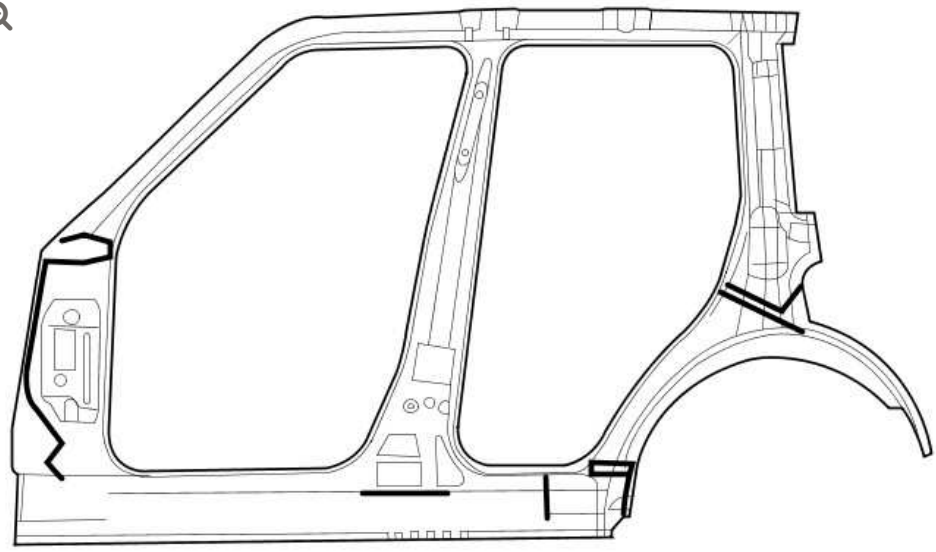

M772179

BODY REPAIRS – WATER LEAKS

DESCRIPTION AND OPERATION

When dealing with water leaks, always adopt a logical approach to the problem using a combination of skill, experience and intuition. Do not reach a conclusion based only on visual evidence, such as assuming that a wet footwell is caused by a water leak from the windshield. It may be found that the source of the water leak is elsewhere. Use of the correct procedure will increase the chance of locating the water leak.

TOOLS AND EQUIPMENT

1	Garden sprayer (hand-operated).
2	Wet/dry vacuum cleaner.
3	Dry, absorbent cloths.
4	Battery torch.
5	Small mirror.
6	Weatherstrip locating tool.
7	Trim panel remover.
8	Small wooden or plastic wedges.
9	Dry compressed air supply.
10	Hot air blower.

11	Sealer applicators.
12	Ultrasonic leak detector.

During leak detection, the vehicle should be considered in three basic sections:

- The front interior space.
- The rear passenger space.
- The luggage compartment.

TESTING

It is important to gain as much information as possible from the customer to be able to identify the approximate location of the leak, this will help when locating the original water leak point of entry.

An effective way to find the water leak point of entry is to use an ordinary garden water spray with the option for water pressure and water jet adjustment, this will allow the water to be directed at a specific point of the vehicle. Use an assistant with a mirror and a battery powered torch to assist with locating the water leak from inside the vehicle.

The testing method is important. Start at the lowest point possible and work slowly upwards. Avoid testing in one area while masking the leak in another. For example: If you suspect a water leak from a windshield seal, make sure that there are no water leaks from the bulkhead grommets and all seals below the level of the windshield before inspecting the windshield seal.

Always visually examine door aperture weatherstrips, grommets and seals. Check for visual signs of damage, deterioration or misalignment.

Always check for door, liftgate and tailgate misalignment.

SEALING

When a water leak has been detected use the following checks to assist with rectification.

1	Renew all door aperture weatherstrips, grommets and seals which have suffered damage, misalignment or deterioration.
2	Check all body seals to make sure that they are correctly located on their mountings. use a lipping tool if necessary.
3	Make sure all body seams to be treated are dry, use compressed air and/or a hot air blower if necessary.
4	Apply sealant on the outside of the joint wherever possible.
5	When rectifying leaks between a windshield or vehicle glazing and its weatherstrip (or in the case of direct glazing, between the glass and bodywork), avoid removing the glass if possible. Apply the approved material at the appropriate location (i.e. glass to weatherstrip or glass to body).

BODY REPAIRS – VEHICLE SPECIFIC INFORMATION AND TOLERANCE CHECKS

DESCRIPTION AND OPERATION

MEASUREMENT TYPES

The following dimensional information is shown so as to assist the technician in the diagnosis and repair of body panels. The information is shown in two different styles. There are X,Y,Z dimensions and point to point dimensions.

The X,Y,Z dimensions are the measuring planes used within Land Rover for the measurement of body panels. The whole bodyshell is within a parallel grid system.

The X plane is an imaginary vertical plane starting at the front of the vehicle. It is at right angles to the centre line of the vehicle and measures distances along the length of the vehicle. For Range Rover, the X '0' point is from the large hole in the front suspension turret. Therefore, any dimensions rearward of this point are shown as positive figures and dimensions forward of this point are shown as negative.

The Y plane is an imaginary plane through the centre of the vehicle. All Y dimensions start from this plane. As a rule, body dimensions are symmetrical situated around the centre line.

The Z plane is set at a fixed distance parallel to the underside of the vehicle. All Z dimensions start from this plane. For Range Rover, the Z '0' point is through the wheel centres.

The point to point measurements are actual distances between two points. These points can be holes or intersection points. Where holes are taken, the point of measurement is always from the hole centre.

Measurements shown are in millimetres and inches. The measurements shown in brackets are in inches.

The tolerance for the basic geometry of the vehicle is ± 1.0 mm (0.040). This includes tooling holes, all fixing holes and apertures.

The tolerance for matching panel form and break lines is ± 0.5 mm (0.020).

DIMENSIONAL ILLUSTRATIONS

X, Y, Z Dimensional Information

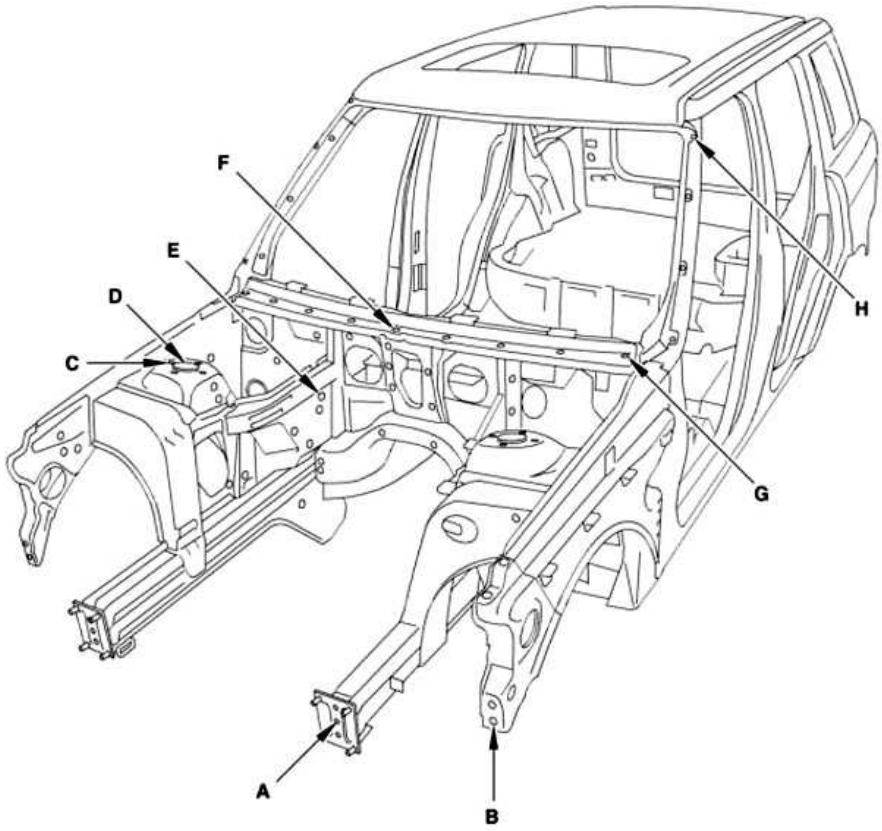

E 85420

ITEM	DESCRIPTION	X	Y	Z
A	Tooling hole - front armature mounting bracket	-707.8 (-27.866)	578.5 (22.775)	241 (9.488)
D	Fender apron - headlamp mounting bracket lower fixing hole	-580 (-22.834)	817.1 (32.169)	693.7 (11.255)
C	Outboard fixing hole - damper mounting	4.2 (0.165)	649.6 (25.574)	755 (29.724)
D	Large hole - damper mounting	3.2 (0.126)	586.3 (23.082)	750 (29.527)
E	Tooling hole - valance support	400 (15.748)	316.8 (12.472)	616.1 (24.255)
F	Center fixing hole - plenum	352.2 (13.866)	0	842.1 (33.153)
G	Outboard fixing hole - plenum	488 (19.212)	719.8 (28.338)	827.4 (32.574)

ITEM	DESCRIPTION	X	Y	Z
H	Top fixing hole - windshield finisher	1163.5 (45.807)	681.4 (26.826)	1350.6 (53.173)

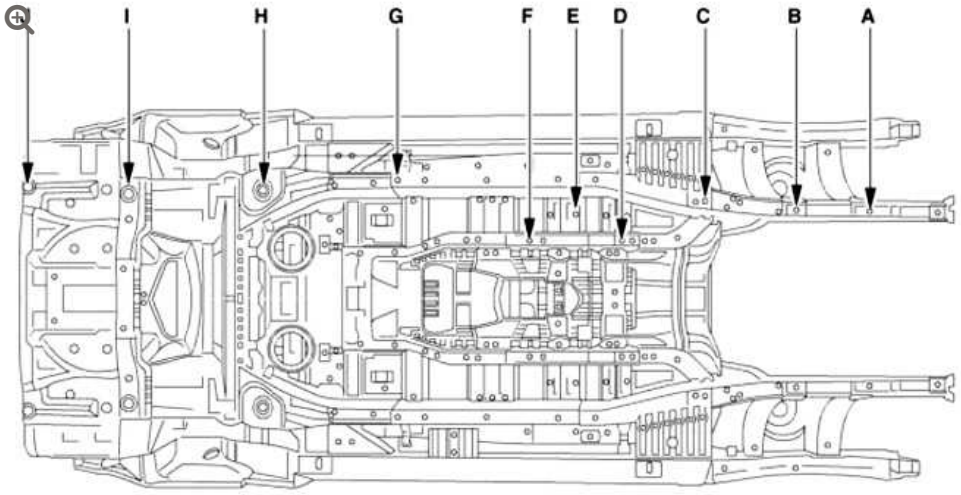

E85421

ITEM	DESCRIPTION	X	Y	Z
A	Front subframe - front fixing hole	-322 (-12.677)	419 (16.496)	175 (6.889)
B	Front subframe - middle fixing hole	20 (0.787)	425 (16.732)	175 (6.889)
C	Front subframe - rear fixing hole	434 (17.086)	435.5 (17.145)	-65 (-2.559)
D	Crossmember - front fixing hole	774.2 (30.48)	340.4 (13.4) LH, 277.6 (10.929) RH	92.9 (3.657)
E	Main floor - tooling hole	1021.2 (40.204)	337.6 (13.291)	91.7 (3.61)
F	Crossmember - rear fixing hole	1268.2 (49.929)	340.4 (13.4) LH, 277.6 (10.929) RH	92.9 (3.657)
G	Fuel tank heat shield - front fixing hole	1766 (69.527)	528.8 (20.818)	-61.6 (-2.425)
H	Rear subframe - front fixing hole	2455 (96.653)	510 (20.078)	71.5 (2.814)
I			510 (20.078)	

ITEM	DESCRIPTION	X	Y	Z
	Rear subframe - rear fixing hole	3143 (123.47)		101.5 (3.996)
J	Rear tooling hole	3717 (146.33)	546 (21.496)	168.5 (6.633)

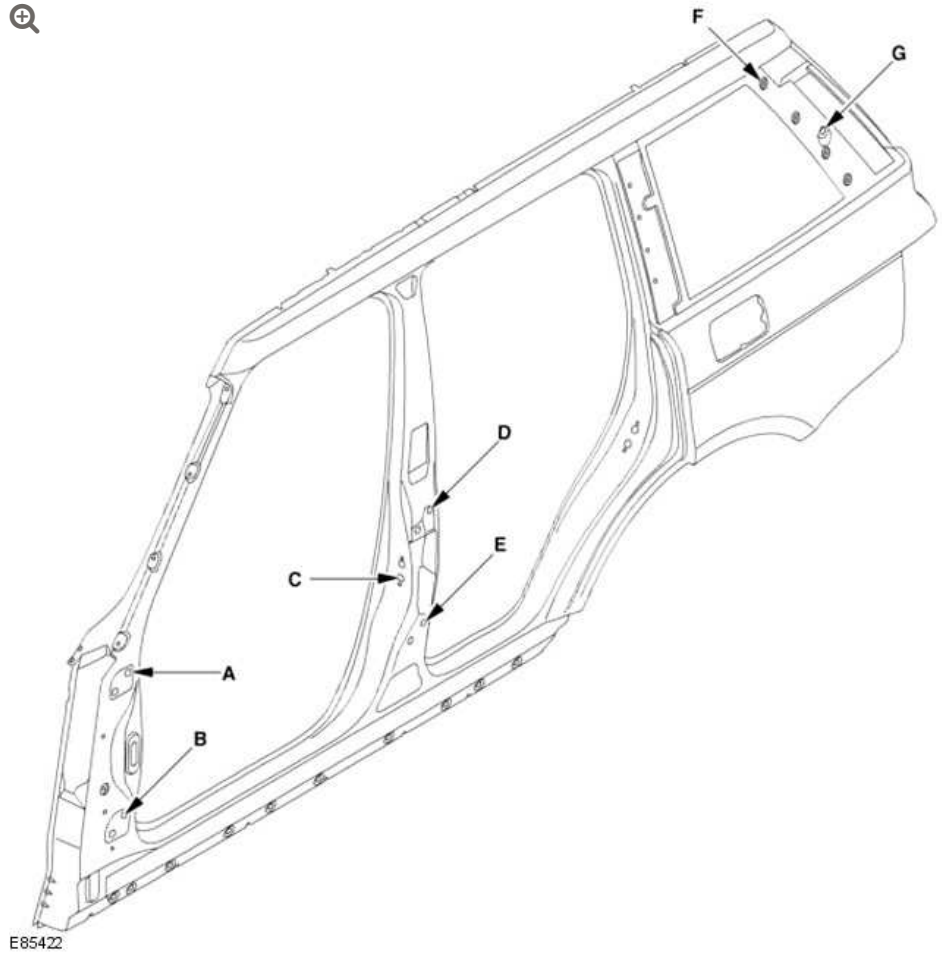

ITEM	DESCRIPTION	X	Y	Z
A	Front door top hinge - top fixing hole	623.5 (24.547)	841.4 (33.125)	757.7 (29.83)
B	Front door bottom hinge - top fixing hole	602.4 (23.716)	849.5 (33.444)	293.1 (11.539)
C	Front door striker - bottom fixing hole	1669.1 (65.712)	843.3 (33.2)	549.1 (21.618)
D	Rear door top hinge - top fixing hole	1766.2 (69.535)	857.7 (33.767)	731.7 (28.807)

ITEM	DESCRIPTION	X	Y	Z
E	Rear door bottom hinge - top fixing hole	1734.6 (68.291)	866.7 (34.122)	383.1 (15.082)
F	D-pillar finisher top fixing hole	3253.4 (128.086)	667.8 (26.291)	1320.8 (52)
G	D-pillar tooling hole	3431 (135.078)	719 (28.307)	1100 (43.307)

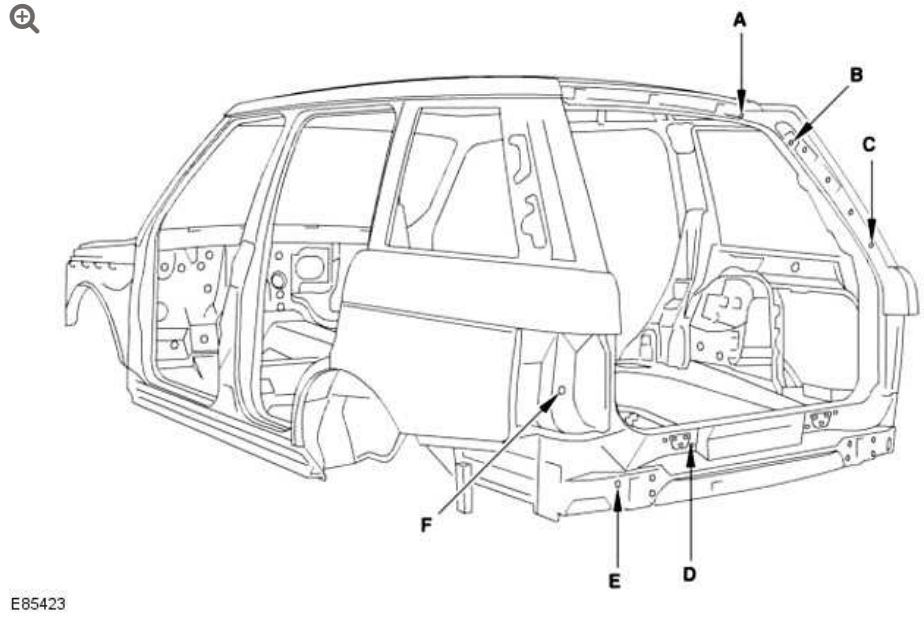

E85423

ITEM	DESCRIPTION	X	Y	Z
A	Tailgate upper - inboard hinge fixing hole	3253.1 (128.074)	473.4 (18.637)	1380.2 (54.338)
B	Tailgate upper - gas strut fixing hole	3351.8 (131.96)	570.5 (22.46)	1302.6 (51.283)
C	D-pillar drain channel - finisher fixing hole	3661.2 (144.141)	663.3 (26.114)	943.4 (37.141)
D	Tailgate lower, hinge - lower fixing hole	3717.2 (146.346)	283.5 (11.161) LH, 377.5 (14.862) RH	336 (13.228)
E	Rear armature - outboard top fixing hole	3749.5 (147.618)	615.3 (24.224)	267.1 (10.515)
F			751.5 (29.586)	

ITEM	DESCRIPTION	X	Y	Z
	Tail lamp mounting panel - tooling hole	3648.9 (143.657)		532.4 (20.96)

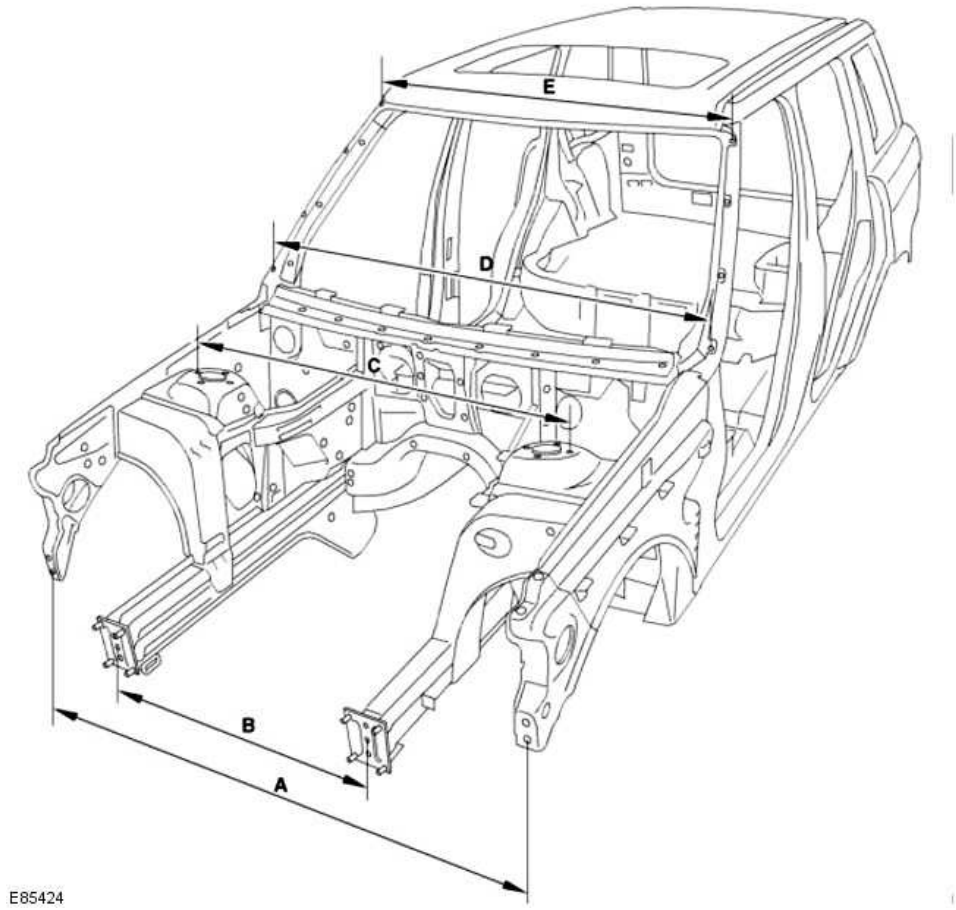

ITEM	FROM	TO	LENGTH
A	Fender apron, bulkhead lower fixing hole, LH	Fender apron, bulkhead lower fixing hole, RH	1634.2 (64.338)
B	Front armature mounting plate, tooling hole, LH	Front armature mounting plate, tooling hole, RH	861 (33.897)
C	Shock absorber mounting, outboard fixing, LH	Shock absorber, outboard fixing, RH	1300 (51.181)
D	Windshield moulding, lower fixing hole, LH	Windshield moulding, lower fixing hole, RH	1651.8 (65.031)
E	Windshield moulding, top fixing hole, LH	Windshield moulding, top fixing hole, RH	1362.8 (53.653)

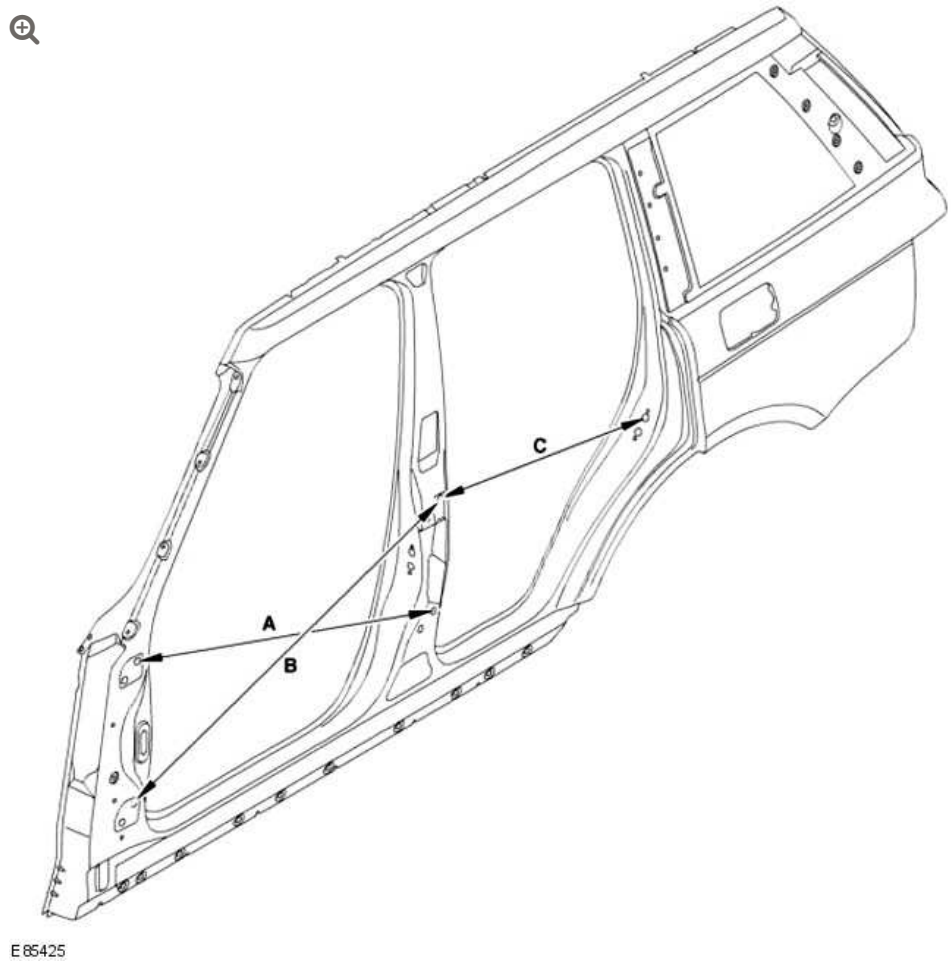

ITEM	FROM	TO	LENGTH
A	Body side, top hinge fixing hole - front door	Body side, bottom hinge fixing hole - rear door	1172.7 (46.169)
B	Body side, bottom hinge fixing hole - front door	Body side, top hinge fixing hole - rear door	1243.7 (48.964)
C	Body side, top hinge fixing hole - rear door	Body side, top striker fixing hole - rear door	827.4 (32.574)

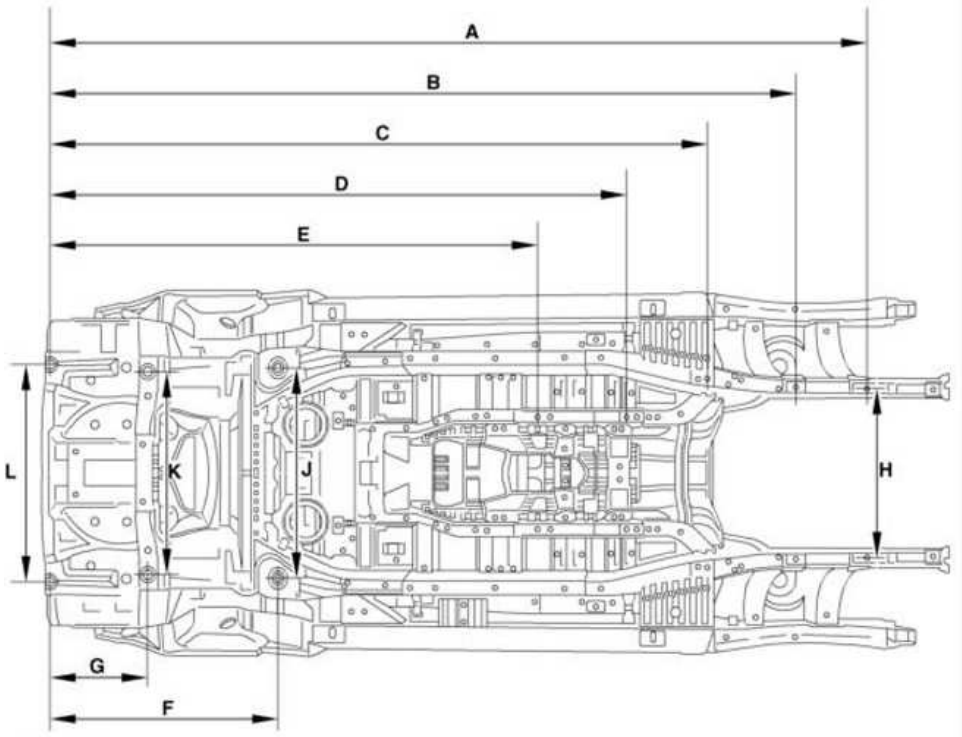

E85426

ITEM	FROM	TO	LENGTH
A	Rear tow bar fixing hole	Front subframe - front fixing hole	4039 (159.015)
B	Rear tow bar fixing hole	Front subframe, middle mounting hole	3737 (147.125)
C	Rear tow bar fixing hole	Front subframe, rear mounting hole	3283 (129.251)
D	Rear tow bar fixing hole	Centre crossmember - front fixing hole	2942.8 (115.858)
E	Rear tow bar fixing hole	Centre crossmember - rear fixing hole	2448.8 (96.409)
F	Rear tow bar fixing hole	Rear subframe, front mounting hole	1262 (49.685)
G	Rear tow bar fixing hole	Rear subframe, rear mounting hole	574 (22.598)

ITEM	FROM	TO	LENGTH
H	Front subframe - front fixing hole, LH	Front sub frame - front fixing hole, RH	838 (32.992)
J	Rear subframe, front mounting hole, LH	Rear subframe, front mounting hole, RH	1020 (40.157)
K	Rear subframe, rear mounting hole, LH	Rear subframe, rear mounting hole, RH	1020 (40.157)
L	Rear tow bar fixing hole, LH	Rear tow bar fixing hole, RH	1092 (42.992)

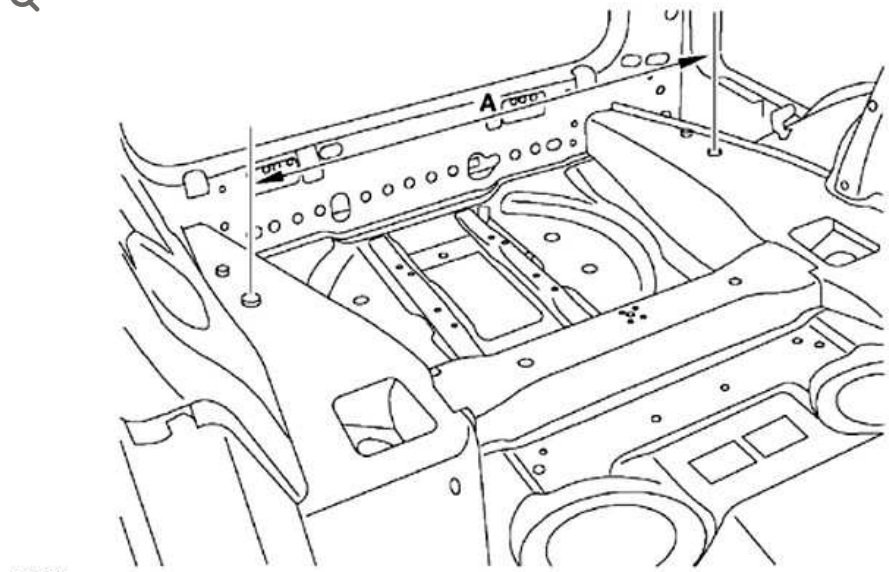

ITEM	FROM	TO	LENGTH
A	Rear subframe, rear mounting hole, LH	Rear subframe, rear mounting hole, RH	1020 (40.157)

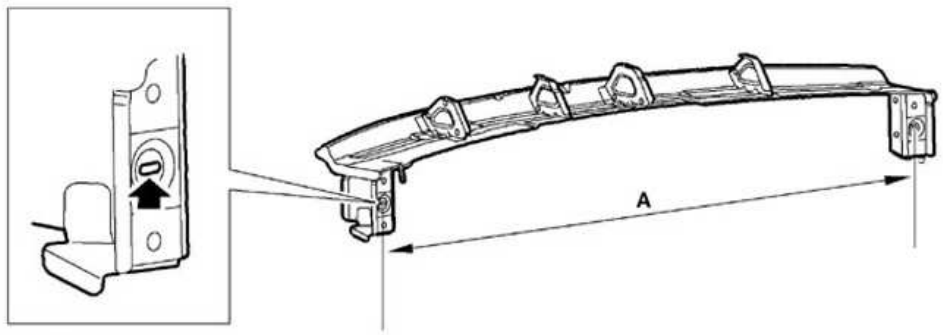

E85428

ITEM	FROM	TO	LENGTH
A	Fascia carrier mounting hole, RH	Fascia carrier mounting slot, LH	1458 (57.401)

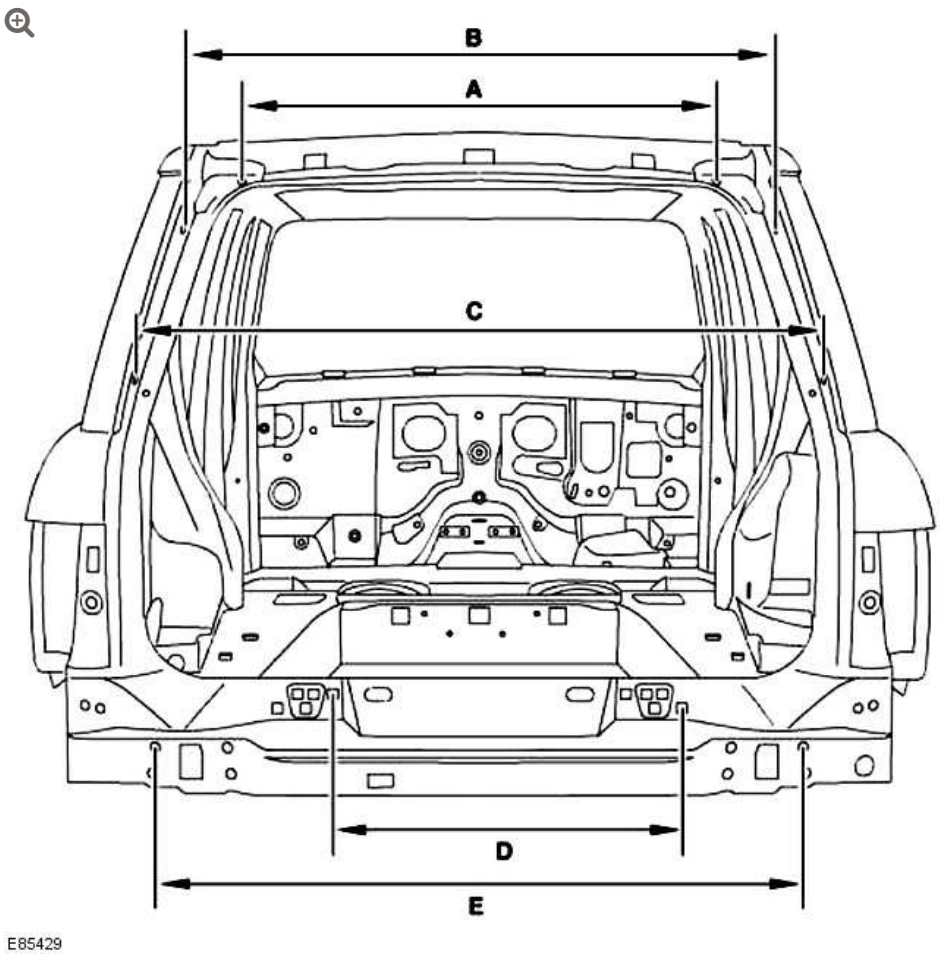

ITEM	FROM	TO	LENGTH
A	Upper tailgate - inboard hinge fixing hole, LH	Upper tailgate - inboard hinge fixing hole, RH	946.8 (37.275
B	Upper tailgate - gas strut fixing hole, LH	Upper tailgate - gas strut fixing hole, RH	1141 (44.921)
C	D-pillar drain channel - finisher fixing hole, LH	D-pillar drain channel - finisher fixing hole, RH	1326.6 (52.228)
D	Lower tailgate hinge fixing - inboard hole, LH	Lower tailgate hinge fixing - inboard hole, RH	661 (26.023)
E	Rear armature - outboard top fixing hole, LH	Rear armature - outboard top fixing hole, RH	1230.6 (48.448)

DESCRIPTION

Gap and Profile Measurements

The following information is to be used as a guide to assist the technician when fitting exterior body panels and trim.

Measurements shown are in millimetres and inches. The measurements shown in brackets are in inches.

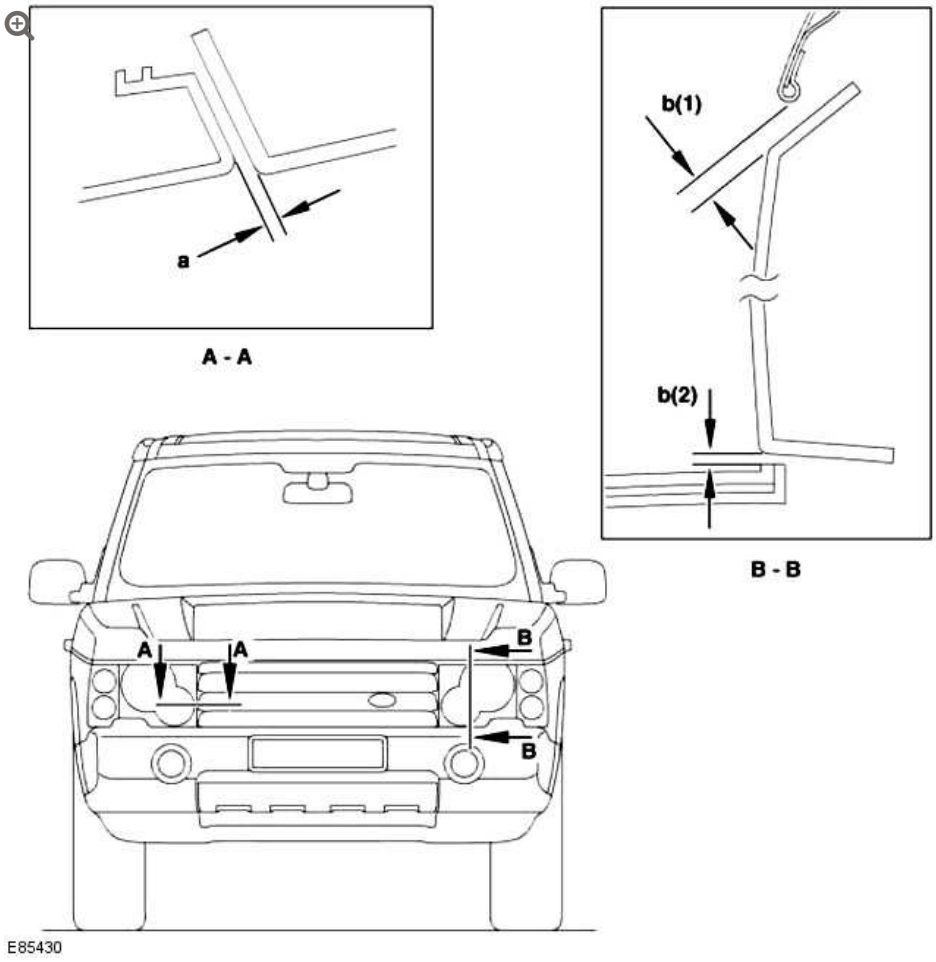

SECTION	GAP	DESCRIPTION	DIMENSION
A-A	a	Headlamp to cowl panel grille	4.0 (0.157), ± 2.0 (0.078)
B-B	b(1)	Headlamp to hood	6.0 (0.236), ± 2.0 (0.078)
B-B	b(2)	Headlamp to bumper cover	3.0 (0.118), ± 1.0 (0.0393)

The profile of hood to the headlamps should be flush. Even gaps from side to side, to a tolerance ± 1.0 mm (0.040).

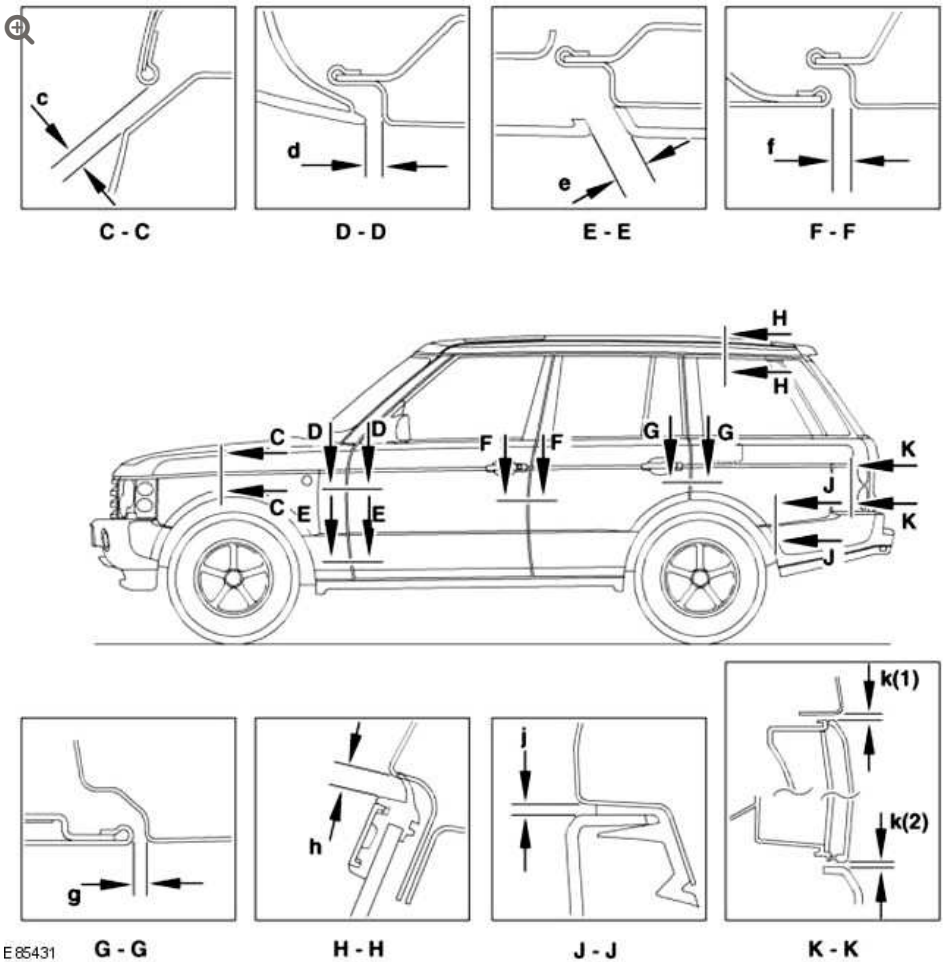

SECTION	GAP	DESCRIPTION	DIMENSION
C-C	c	Hood to front fender grille	6.0 (0.236), ± 1.5 (0.059)
D-D	d	Front fender grille finisher to front door	5.0 (0.196), ± 1.0 (0.040)
E-E	e	Front fender lower finisher to front door	7.5 (0.295), ± 1.25 (0.049)
F-F	f	Front door to rear door	5.0 (0.196), ± 1.0 (0.040)
G-G	g	Rear door to body side	5.0 (0.196), ± 1.0 (0.040)
H-H	h	Roof panel to rear quarter trim	6.5 (0.255), ± 2 (0.078)
J-J	j	Body side to rear bumper	3.0 (0.118), ± 1.0 (0.040)
K-K	k(1)	Tail lamp to body side	

SECTION	GAP	DESCRIPTION	DIMENSION
			3.0 (0.118), ± 1.0 (0.040)
K-K	k(2)	Tail lamp to bumper cover	3.0 (0.118), ± 1.0 (0.040)

- Section D-D, profile of fender grille to front door is 0.0 nominal, tolerance +1.0 (0.040) / -0.0.
- Section F-F, profile of front door to rear door is 0.0 nominal, tolerance +1.0 (0.040) / -0.0.
- Section G-G, profile of rear door to body side is 0.0 nominal, tolerance +1.0 (0.040) / -0.0.
- Section J-J, profile of rear bumper cover to body side is 3.5 mm (0.137) nominal, tolerance ± 1.0 (0.040).

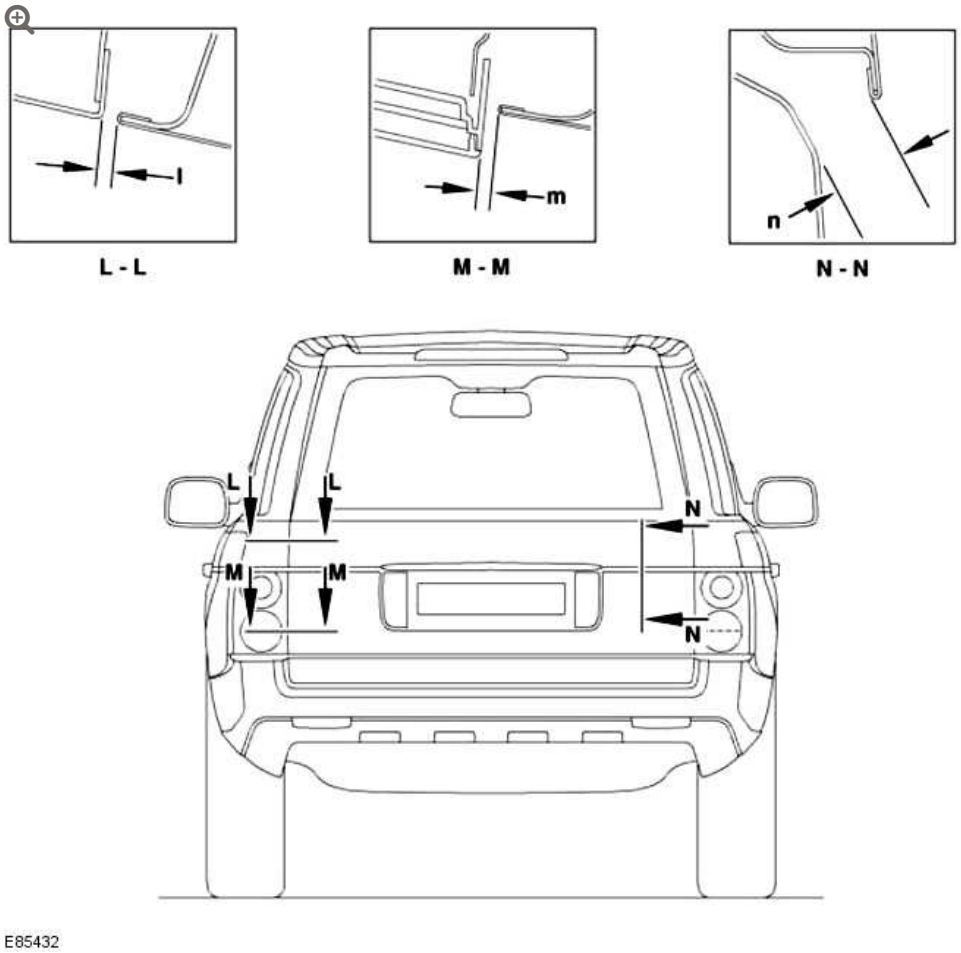

E85432

SECTION	GAP	DESCRIPTION	DIMENSION
L-L	l	Body side to liftgate	4.0 (0.157), ± 1.0 (0.040)
M-M	m	Tailgate to tail lamp	5.0 (0.196), ± 1.5 (0.059)
N-N	n	Liftgate to tailgate	20 (0.787), ± 2 (0.078)

FRONT END SHEET METAL REPAIRS

AUXILIARY FRONT CROSSMEMBER (G928694)

REMOVAL AND INSTALLATION

REMOVAL

1. Disconnect the battery ground cable.
   For additional information, refer to: Specifications (414-00, Specifications).

2. Remove the LH and RH headlamp mounting brackets.
   For additional information, refer to: Headlamp Mounting Bracket (501-02, Removal and Installation).

3. Release the power steering hose from the auxiliary front crossmember.
   - Remove the nut.
   - Reposition the power steering hose.

4.

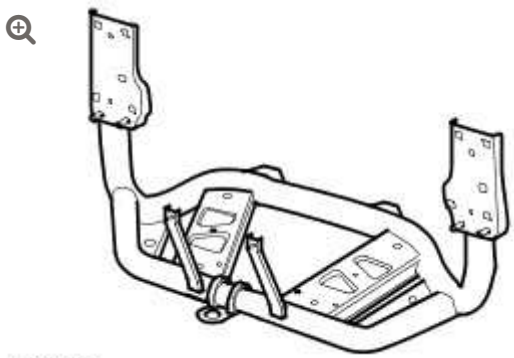

Remove the auxiliary front crossmember.

- Remove the 2 bolts.

5. **NOTE:**

   Do not disassemble further if the component is removed for access only.

   Remove the front axle cooling duct.

   - Remove the clip.

6. Remove the charge air cooler trim panel.
   - Remove the 5 clips.

7. Prepare the new panel for installation.
   For additional information, refer to: Body (501-00, Description and Operation).

INSTALLATION

1. Install the charge air cooler trim panel.
   - Install the 5 clips.

2. Install the front axle cooling duct.
    - Install the clip.

3. Install the auxiliary front crossmember.
    - Install the 2 bolts.

4. Install the power steering hose to the auxiliary front crossmember.
    - Reposition the power steering hose.
    - Install the nut.

5. Install the LH and RH headlamp mounting brackets.
   For additional information, refer to: Headlamp Mounting Bracket (501-02, Removal and Installation).

6. Connect the battery ground cable.
   For additional information, refer to: Specifications (414-00, Specifications).

FRONT END SHEET METAL REPAIRS

FENDER APRON PANEL

(G928696)

REMOVAL AND INSTALLATION

REMOVAL

1. Disconnect the battery ground cable.
   For additional information, refer to: Specifications (414-00, Specifications).

2. Disconnect the generator electrical connector.

3. Remove the fender.
   For additional information, refer to: Fender (501-02, Removal and Installation).

4. **NOTE:**

   RH fender apron panel replacement only.

   Remove the Engine control module (ECM).

   - Remove the ECM housing.

5. **NOTE:**

LH fender apron panel replacement only.

Remove the windscreen washer reservoir.
For additional information, refer to: Windshield Washer Reservoir (501-16, Removal and Installation).

6. 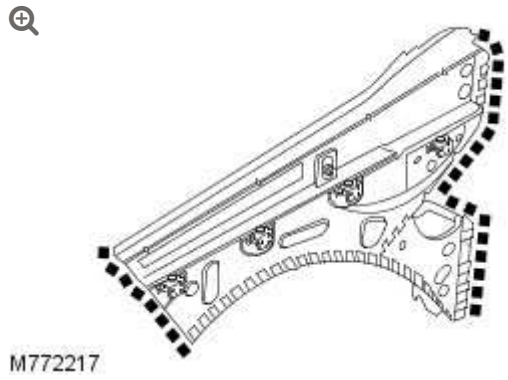

Remove the fender apron panel.

7. Prepare the new panel for installation.
For additional information, refer to: Body (501-00, Description and Operation).

INSTALLATION

1. Install the fender apron panel.

2. **NOTE:**

LH fender apron panel replacement only.

Install the windscreen washer reservoir.
For additional information, refer to: Windshield Washer Reservoir (501-16, Removal and Installation).

3. **NOTE:**

   RH fender apron panel replacement only.

   Install the ECM.

   - Install the ECM housing.

4. Install the fender.
   For additional information, refer to: Fender (501-02, Removal and Installation).

5. Connect the generator electrical connector.

6. Connect the battery ground cable.
   For additional information, refer to: Specifications (414-00, Specifications).

FRONT END SHEET METAL REPAIRS

FENDER APRON PANEL CLOSING PANEL (G928697)

REMOVAL AND INSTALLATION

REMOVAL

1. Disconnect the battery ground cable.
   For additional information, refer to: Specifications (414-00, Specifications).
2. Disconnect the generator electrical connector.
3. Remove the fender.
   For additional information, refer to: Fender (501-02, Removal and Installation).
4. Remove the fender apron panel.
   For additional information, refer to: Fender Apron Panel (501-27, Removal and Installation).
5.

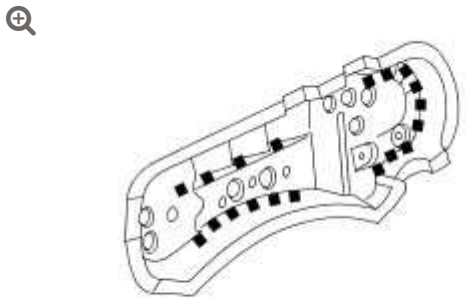

M772216

Remove the fender apron panel closing panel.

6. Prepare the new panel for installation.
   For additional information, refer to: Body (501-00, Description and Operation).

INSTALLATION

1. Install the fender apron panel closing panel.

2. Install the fender apron panel.
   For additional information, refer to: Fender Apron Panel (501-27, Removal and Installation).

3. Install the fender.
   For additional information, refer to: Fender (501-02, Removal and Installation).

4. Connect the generator electrical connector.

5. Connect the battery ground cable.
   For additional information, refer to: Specifications (414-00, Specifications).

FRONT END SHEET METAL REPAIRS

FENDER APRON PANEL FRONT EXTENSION (G928698)

REMOVAL AND INSTALLATION

REMOVAL

1. Disconnect the battery ground cable.
   For additional information, refer to: Specifications (414-00, Specifications).

2. Disconnect the generator electrical connector.

3. Remove the fender.
   For additional information, refer to: Fender (501-02, Removal and Installation).

4. **NOTE:**

   RH fender apron panel front extension replacement only.

   Remove the Engine control module (ECM).

   - Remove the ECM housing.

5. NOTE:

LH fender apron panel front extension replacement only.

Remove the windscreen washer reservoir.
For additional information, refer to: Windshield Washer Reservoir (501-16, Removal and Installation).

6. Release the wiring harness from the fender apron panel front extension.

7. Remove the bumper bracket.

8. NOTE:

LH fender apron panel front extension replacement only.

Remove the hood latch cable.

9. NOTE:

LH fender apron panel front extension replacement only.

Remove the coolant expansion tank. For additional information, refer to: (303-03)
Coolant Expansion Tank (Removal and Installation),
Coolant Expansion Tank (Removal and Installation),
Coolant Expansion Tank (Removal and Installation).

10.

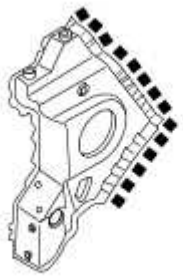

M772218

Remove the fender apron panel front extension.

11. Prepare the new panel for installation.
For additional information, refer to: Body (501-00, Description and Operation).

INSTALLATION

1. Install the fender apron panel front extension.

2. **NOTE:**

LH fender apron panel front extension replacement only.

Install the coolant expansion tank. For additional information, refer to: (303-03)
Coolant Expansion Tank (Removal and Installation),
Coolant Expansion Tank (Removal and Installation),
Coolant Expansion Tank (Removal and Installation).

3.

NOTE:

LH fender apron panel front extension replacement only.

Install the hood latch cable.

4. Install the bumper bracket.

5. Secure the wiring harness from the fender apron panel front extension.

6. NOTE:

LH fender apron panel front extension replacement only.

Install the windscreen washer reservoir.
For additional information, refer to: Windshield Washer Reservoir (501-16, Removal and Installation).

7. NOTE:

RH fender apron panel front extension replacement only.

Install the ECM.

- Install the ECM housing.

8.

Install the fender.
For additional information, refer to: Fender (501-02, Removal and Installation).

9. Connect the generator electrical connector.

10. Connect the battery ground cable.
For additional information, refer to: Specifications (414-00, Specifications).

FRONT END SHEET METAL REPAIRS

FENDER APRON PANEL INNER REINFORCEMENT

(G928699)

REMOVAL AND INSTALLATION

REMOVAL

1. Remove the front side member and suspension top mount assembly.
   For additional information, refer to: Front Side Member and Suspension Top Mount Assembly (501-27, Removal and Installation).

2. 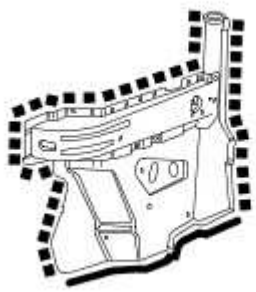
   M772212

   Remove the fender apron panel inner reinforcement.

3. Prepare the new panel for installation.
   For additional information, refer to: Body (501-00, Description and Operation).

INSTALLATION

1. Install the fender apron panel inner reinforcement.

2. Install the front side member and suspension top mount assembly.
   For additional information, refer to: Front Side Member and Suspension Top Mount Assembly (501-27, Removal and Installation).

FRONT END SHEET METAL REPAIRS

FENDER APRON PANEL REINFORCEMENT FRONT SECTION (G928700)

REMOVAL AND INSTALLATION

REMOVAL

1. Disconnect the battery ground cable.
   For additional information, refer to: Specifications (414-00, Specifications).
2. Disconnect the generator electrical connector.
3. Remove the fender apron panel front extension.
   For additional information, refer to: Fender Apron Panel Front Extension (501-27, Removal and Installation).
4. Release the wiring harness from the fender apron panel reinforcement front section.
5.

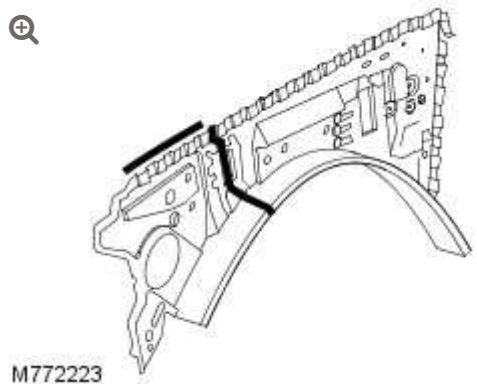

Remove the fender apron panel reinforcement front section.

6. Prepare the new panel for installation.
   For additional information, refer to: Body (501-00, Description and Operation).

INSTALLATION

1. Install the fender apron panel reinforcement front section.

2. Secure the wiring harness from the fender apron panel reinforcement front section.

3. Install the fender apron panel front extension.
   For additional information, refer to: Fender Apron Panel Front Extension (501-27, Removal and Installation).

4. Connect the generator electrical connector.

5. Connect the battery ground cable.
   For additional information, refer to: Specifications (414-00, Specifications).

FRONT END SHEET METAL REPAIRS

FENDER APRON PANEL REINFORCEMENT REAR SECTION (G928701)

REMOVAL AND INSTALLATION

REMOVAL

	All vehicles

1. Disconnect the battery ground cable.
   For additional information, refer to: Specifications (414-00, Specifications).

2. Remove the fender apron panel.
   For additional information, refer to: Fender Apron Panel (501-27, Removal and Installation).

3. Remove the engine undershield.
   For additional information, refer to: Engine Undershield (501-02, Removal and Installation).

4.

Remove the front bumper cover.
For additional information, refer to: Front Bumper Cover (501-19, Removal and Installation).

5. Remove the front bumper.
For additional information, refer to: Front Bumper (501-19, Removal and Installation).

6. Remove the coolant expansion tank. For additional information, refer to: (303-03)
Coolant Expansion Tank (Removal and Installation),
Coolant Expansion Tank (Removal and Installation),
Coolant Expansion Tank (Removal and Installation).

7. Remove the radiator. For additional information, refer to: (303-03)
Radiator (Removal and Installation),
Radiator (Removal and Installation),
Radiator (Removal and Installation),
Radiator (Removal and Installation).

8. **CAUTION:**

Make sure if the air conditioning (A/C) components are damaged or contaminated during a collision, further investigation and replacement of components may be required. Failure to follow this instruction may result in damage to the vehicle.

Recover the A/C refrigerant.
For additional information, refer to: Air Conditioning (A/C) System Recovery, Evacuation and Charging (412-00, General Procedures).

9. Release the A/C pipes from the front side member.

10. Remove the transmission fluid cooler. For additional information, refer to: (307-02)
Transmission Fluid Cooler (Removal and Installation),
Transmission Fluid Cooler (Removal and Installation),
Transmission Fluid Cooler - 4.4L (Removal and Installation).

ℹ	Vehicles with diesel engine

11. Remove the charge air cooler pipes.
    - Release the charge air cooler pipes.

ℹ	All vehicles

12. Remove the fuel fired booster heater.
For additional information, refer to: Fuel Fired Booster Heater (412-02, Removal and Installation).

13. Remove the plenum chamber.
For additional information, refer to: Plenum Chamber (412-01, Removal and Installation).

14. Remove the cowl panel grille.
For additional information, refer to: Cowl Panel Grille (501-02, Removal and Installation).

15. Remove the plenum chamber drain tube.

16. Remove the accelerator pedal. For additional information, refer to: (310-02)
Accelerator Pedal (Removal and Installation),
Accelerator Pedal (Removal and Installation).

17. Remove the fender.
For additional information, refer to: Fender (501-02, Removal and Installation).

18. Remove the power steering pipes from the access panel.

19. Remove the windscreen washer reservoir.
For additional information, refer to: Windshield Washer Reservoir (501-16, Removal and Installation).

20. Remove the generator. For additional information, refer to: (414-02)
Generator (Removal and Installation),
Generator (Removal and Installation),
Generator (Removal and Installation).

21. Remove the anti-lock brake system (ABS) module. For additional information, refer to: (206-09)
Anti-Lock Brake System (ABS) Module - Vehicles With: Standard Brakes (Removal and Installation),
Anti-Lock Brake System (ABS) Module - Vehicles With: High Performance Brakes (Removal and Installation),
Anti-Lock Brake System (ABS) Module - 3.6L (TdV8) Diesel (Removal and Installation).

22. Remove the brake booster. For additional information, refer to: (206-07)
Brake Booster - Vehicles With: Standard Brakes (Removal and Installation),
Brake Booster - Vehicles With: High Performance Brakes (Removal and Installation).

23. Remove the fuel pipes from the side member.

24. Remove the fuel filter element. For additional information, refer to: (310-01)
    Fuel Filter (Removal and Installation),
    Fuel Filter (Removal and Installation),
    Fuel Filter Element (Removal and Installation).

25. Remove the battery tray.
    For additional information, refer to: Battery Tray (414-01, Removal and Installation).

26. Remove the front air spring.
    For additional information, refer to: Front Air Spring (204-05, Removal and Installation).

27. Remove the air suspension reservoir.
    For additional information, refer to: Air Suspension Reservoir (204-05, Removal and Installation).

28. Remove the fuel pipes.

29. Remove the brake pipes.

30. Disconnect the wiring harness.
    - Reposition the wiring harness.

31. Remove the insulation material from the instrument panel lower section.

32. Remove the heat shield from the transmission tunnel.

33. Remove the steering column.
    For additional information, refer to: Steering Column (211-04, Removal and Installation).

34. Remove the in-vehicle crossbeam.
For additional information, refer to: In-Vehicle Crossbeam (501-12, Removal and Installation).

35. Release the floor covering for access.

36. 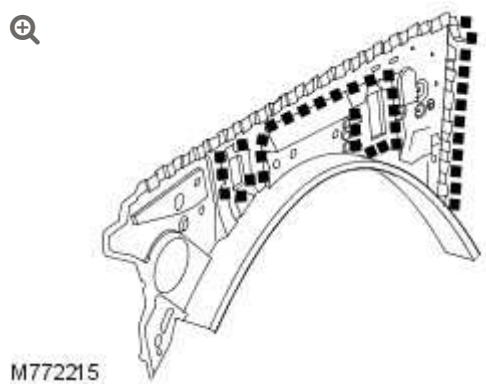

Remove the fender apron panel reinforcement rear section.

37. Prepare the new panel for installation.
For additional information, refer to: Body (501-00, Description and Operation).

INSTALLATION

All vehicles

1. Install the fender apron panel reinforcement rear section.

2. Secure the floor covering.

3. Install the in-vehicle crossbeam.
For additional information, refer to: In-Vehicle Crossbeam (501-12, Removal and Installation).

4. Install the heat shield to the transmission tunnel.

5. Install the insulation material to the instrument panel lower section.

6. Connect the wiring harness.
   - Reposition the wiring harness.

7. Install the brake pipes.

8. Install the fuel pipes.

9. Install the air suspension reservoir.
   For additional information, refer to: Air Suspension Reservoir (204-05, Removal and Installation).

10. Install the front air spring.
    For additional information, refer to: Front Air Spring (204-05, Removal and Installation).

11. Install the battery tray.
    For additional information, refer to: Battery Tray (414-01, Removal and Installation).

12. Install the fuel filter element. For additional information, refer to: (310-01)
    Fuel Filter (Removal and Installation),
    Fuel Filter (Removal and Installation),
    Fuel Filter Element (Removal and Installation).

13. Install the fuel pipes to the side member.

14. Install the brake booster. For additional information, refer to: (206-07)
    Brake Booster - Vehicles With: Standard Brakes (Removal and Installation),

Brake Booster - Vehicles With: High Performance Brakes (Removal and Installation).

15. Install the anti-lock brake system (ABS) module. For additional information, refer to: (206-09)
Anti-Lock Brake System (ABS) Module - Vehicles With: Standard Brakes (Removal and Installation),
Anti-Lock Brake System (ABS) Module - Vehicles With: High Performance Brakes (Removal and Installation),
Anti-Lock Brake System (ABS) Module - 3.6L (TdV8) Diesel (Removal and Installation).

16. Install the generator.
For additional information, refer to: Generator (414-02, Removal and Installation).

17. Install the windscreen washer reservoir.
For additional information, refer to: Windshield Washer Reservoir (501-16, Removal and Installation).

18. Install the power steering pipes to the access panel.

19. Install the fender.
For additional information, refer to: Fender (501-02, Removal and Installation).

20. Install the accelerator pedal. For additional information, refer to: (310-02)
Accelerator Pedal (Removal and Installation),
Accelerator Pedal (Removal and Installation).

21. Install the plenum chamber drain tube.

22.

Install the cowl panel grille.
For additional information, refer to: Cowl Panel Grille (501-02, Removal and Installation).

23. Install the plenum chamber.
For additional information, refer to: Plenum Chamber (412-01, Removal and Installation).

24. Install the fuel fired booster heater.
For additional information, refer to: Fuel Fired Booster Heater (412-02, Removal and Installation).

ℹ	Vehicles with diesel engine

25. Install the charge air cooler pipes.
    - Secure the charge air cooler pipes.

ℹ	All vehicles

26. Install the transmission fluid cooler. For additional information, refer to: (307-02)
Transmission Fluid Cooler (Removal and Installation),
Transmission Fluid Cooler (Removal and Installation),
Transmission Fluid Cooler - 4.4L (Removal and Installation).

27. Secure the A/C pipes to the front side member.

28.

CAUTION:

Make sure if the A/C components are damaged or contaminated during a collision, further investigation and replacement of components may be required. Failure to follow this instruction may result in damage to the vehicle.

Fill the A/C system.
For additional information, refer to: Air Conditioning (A/C) System Recovery, Evacuation and Charging (412-00, General Procedures).

29. Install the radiator. For additional information, refer to: (303-03)
Radiator (Removal and Installation),
Radiator (Removal and Installation),
Radiator (Removal and Installation),
Radiator (Removal and Installation).

30. Install the coolant expansion tank. For additional information, refer to: (303-03)
Coolant Expansion Tank (Removal and Installation),
Coolant Expansion Tank (Removal and Installation),
Coolant Expansion Tank (Removal and Installation).

31. Install the front bumper.
For additional information, refer to: Front Bumper (501-19, Removal and Installation).

32. Install the front bumper cover.
For additional information, refer to: Front Bumper Cover (501-19, Removal and Installation).

33. Install the engine undershield.
    For additional information, refer to: Engine Undershield (501-02, Removal and Installation).

34. Install the fender apron panel.
    For additional information, refer to: Fender Apron Panel (501-27, Removal and Installation).

35. Connect the battery ground cable.
    For additional information, refer to: Specifications (414-00, Specifications).

FRONT END SHEET METAL REPAIRS

FRONT SIDE MEMBER AND SUSPENSION TOP MOUNT ASSEMBLY (G928702)

REMOVAL AND INSTALLATION

REMOVAL

All vehicles

CAUTION:

New front side member and suspension top mount assemblies are supplied without the VIN stamping. The VIN must be stamped onto the suspension top mount assembly in the original position, in accordance with local market regulations. If in any doubt, check with vehicle homologation/government regulations co-ordinator (GRC).

NOTE:

In this procedure the front side member and suspension turret are replaced as an assembly.

1. Disconnect the battery ground cable.
   For additional information, refer to: Specifications (414-00 Charging System - General Information, Specifications).

2. Remove the engine undershield.
   For additional information, refer to: Engine Undershield (501-02 Front End Body Panels, Removal and Installation).

3. Remove the front bumper cover.
   For additional information, refer to: Front Bumper Cover (501-19 Bumpers, Removal and Installation).

4. Remove the front bumper.
   For additional information, refer to: Front Bumper (501-19 Bumpers, Removal and Installation).

5. Remove the coolant expansion tank. For additional information, refer to:
   Coolant Expansion Tank (303-03 Engine Cooling - 3.6L (TdV8) Diesel, Removal and Installation),
   Coolant Expansion Tank (303-03 Engine Cooling - 4.2L, Removal and Installation),
   Coolant Expansion Tank (303-03 Engine Cooling - 4.4L, Removal and Installation).

6. Remove the radiator. For additional information, refer to:
   Radiator (303-03 Engine Cooling - 3.6L (TdV8) Diesel, Removal and Installation),

Radiator (303-03 Engine Cooling - 4.2L, Removal and Installation),
Radiator (303-03 Engine Cooling - 4.4L, Removal and Installation),
Radiator (303-03 Supercharger Cooling, Removal and Installation).

7. **CAUTION:**

> Make sure if the air conditioning (A/C) components are damaged or contaminated during a collision, further investigation and replacement of components may be required. Failure to follow this instruction may result in damage to the vehicle.

Recover the A/C refrigerant.
For additional information, refer to: Air Conditioning (A/C) System Recovery, Evacuation and Charging (412-00 Climate Control System - General Information, General Procedures).

8. Remove the transmission fluid cooler. For additional information, refer to:
Transmission Fluid Cooler (307-02 Transmission/Transaxle Cooling - 3.6L (TdV8) Diesel, Removal and Installation),
Transmission Fluid Cooler (307-02 Transmission/Transaxle Cooling - 4.2L, Removal and Installation),
Transmission Fluid Cooler - 4.4L (307-02 Transmission/Transaxle Cooling - 4.4L, Removal and Installation).

9. Release the A/C pipes from the front side member.

10. Remove the engine. For additional information, refer to:

Engine (303-01 Engine - 4.2L, Removal),
Engine (303-01 Engine - 4.4L, Removal),
Engine (303-01 Engine - 3.6L (TdV8) Diesel, Removal).

ℹ	Vehicles with diesel engine

11. Remove the charge air cooler pipes.
    - Release the charge air cooler pipes.

ℹ	All vehicles

12. Remove the fuel fired booster heater.
    For additional information, refer to: Fuel Fired Booster Heater (412-02 Auxiliary Heating, Removal and Installation).

13. Remove the plenum chamber.
    For additional information, refer to: Plenum Chamber (412-01 Air Distribution and Filtering, Removal and Installation).

14. Remove the cowl panel grille.
    For additional information, refer to: Cowl Panel Grille (501-02 Front End Body Panels, Removal and Installation).

15. Remove the plenum chamber drain tube.

16. Remove the accelerator pedal. For additional information, refer to:
    Accelerator Pedal (310-02 Acceleration Control - 4.4L, Removal and Installation),
    Accelerator Pedal (310-02 Acceleration Control - 3.6L (TdV8) Diesel, Removal and Installation).

17.

Remove the fender.
For additional information, refer to: Fender (501-02 Front End Body Panels, Removal and Installation).

18. Remove the power steering pipes from the access panel.

19. Remove the windscreen washer reservoir.
For additional information, refer to: Windshield Washer Reservoir (501-16 Wipers and Washers, Removal and Installation).

20. Remove the generator. For additional information, refer to:
Generator (414-02 Generator and Regulator - 3.6L (TdV8) Diesel, Removal and Installation),
Generator (414-02 Generator and Regulator - 4.2L, Removal and Installation),
Generator (414-02 Generator and Regulator - 4.4L, Removal and Installation).

21. Remove the anti-lock brake system (ABS) module. For additional information, refer to: (206-09 Anti-Lock Control - Traction Control)
Anti-Lock Brake System (ABS) Module - Vehicles With: Standard Brakes (Removal and Installation),
Anti-Lock Brake System (ABS) Module - Vehicles With: High Performance Brakes (Removal and Installation),
Anti-Lock Brake System (ABS) Module - 3.6L (TdV8) Diesel (Removal and Installation).

22. Remove the brake booster. For additional information, refer to: (206-07 Power Brake Actuation)
Brake Booster - Vehicles With: Standard Brakes (Removal and Installation),

Brake Booster - Vehicles With: High Performance Brakes (Removal and Installation).

23. Remove the fuel pipes from the side member.

24. Remove the fuel filter element. For additional information, refer to:
Fuel Filter (310-01 Fuel Tank and Lines - 4.2L, Removal and Installation),
Fuel Filter (310-01 Fuel Tank and Lines - 4.4L, Removal and Installation),
Fuel Filter Element (310-01 Fuel Tank and Lines - 3.6L (TdV8) Diesel, Removal and Installation).

25. Remove the battery tray.
For additional information, refer to: Battery Tray (414-01 Battery, Mounting and Cables, Removal and Installation).

26. Remove the front air spring.
For additional information, refer to: Front Air Spring (204-05 Vehicle Dynamic Suspension, Removal and Installation).

27. Remove the air suspension reservoir.
For additional information, refer to: Air Suspension Reservoir (204-05 Vehicle Dynamic Suspension, Removal and Installation).

28. Remove the fuel pipes.

29. Remove the brake pipes.

30. Disconnect the wiring harness.
    - Reposition the wiring harness.

31. Remove the insulation material from the instrument panel lower section.

32. Remove the heat shield from the transmission tunnel.

33. Remove the in-vehicle crossbeam.
For additional information, refer to: In-Vehicle Crossbeam (501-12 Instrument Panel and Console, Removal and Installation).

34. Release the floor covering for access.

35.

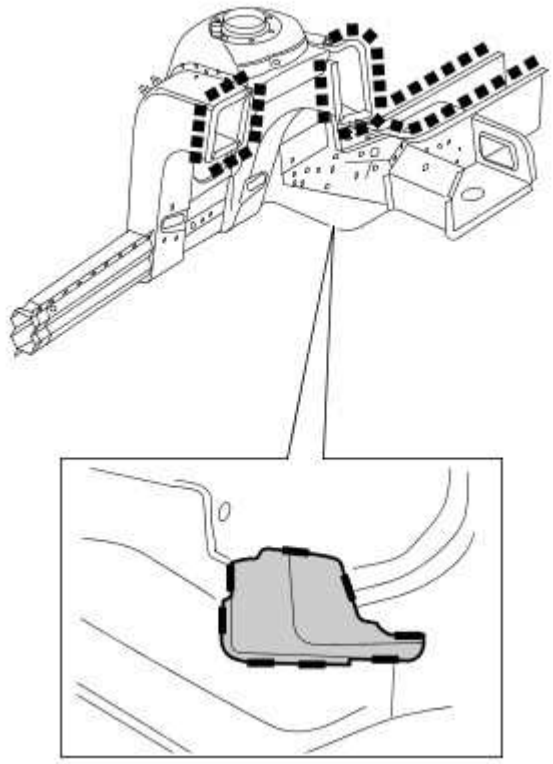

M772236

Remove the front side member and suspension top mount assembly.

36. Prepare the new panel for installation.
For additional information, refer to: Body (501-00 Body System - General Information, Description and Operation).

INSTALLATION

ℹ	All vehicles

1. Install the front side member and suspension top mount assembly.

2. Secure the floor covering.

3. Install the in-vehicle crossbeam.
   For additional information, refer to: In-Vehicle Crossbeam (501-12 Instrument Panel and Console, Removal and Installation).

4. Install the heat shield to the transmission tunnel.

5. Install the insulation material to the instrument panel lower section.

6. Connect the wiring harness.
   - Reposition the wiring harness.

7. Install the brake pipes.

8. Install the fuel pipes.

9. Install the air suspension reservoir.
   For additional information, refer to: Air Suspension Reservoir (204-05 Vehicle Dynamic Suspension, Removal and Installation).

10.

Install the front air spring.
For additional information, refer to: Front Air Spring (204-05 Vehicle Dynamic Suspension, Removal and Installation).

11. Install the battery tray.
For additional information, refer to: Battery Tray (414-01 Battery, Mounting and Cables, Removal and Installation).

12. Install the fuel filter element. For additional information, refer to:
Fuel Filter (310-01 Fuel Tank and Lines - 4.2L, Removal and Installation),
Fuel Filter (310-01 Fuel Tank and Lines - 4.4L, Removal and Installation),
Fuel Filter Element (310-01 Fuel Tank and Lines - 3.6L (TdV8) Diesel, Removal and Installation).

13. Install the brake booster. For additional information, refer to: (206-07 Power Brake Actuation)
Brake Booster - Vehicles With: Standard Brakes (Removal and Installation),
Brake Booster - Vehicles With: High Performance Brakes (Removal and Installation).

14. Install the anti-lock brake system (ABS) module. For additional information, refer to: (206-09 Anti-Lock Control - Traction Control)
Anti-Lock Brake System (ABS) Module - Vehicles With: Standard Brakes (Removal and Installation),
Anti-Lock Brake System (ABS) Module - Vehicles With: High Performance Brakes (Removal and Installation),
Anti-Lock Brake System (ABS) Module - 3.6L (TdV8) Diesel (Removal and Installation).

15. Install the generator. For additional information, refer to:

Generator (414-02 Generator and Regulator - 3.6L (TdV8) Diesel, Removal and Installation),
Generator (414-02 Generator and Regulator - 4.2L, Removal and Installation),
Generator (414-02 Generator and Regulator - 4.4L, Removal and Installation).

16. Install the windscreen washer reservoir.
For additional information, refer to: Windshield Washer Reservoir (501-16 Wipers and Washers, Removal and Installation).

17. Install the power steering pipes to the access panel.

18. Install the fender.
For additional information, refer to: Fender (501-02 Front End Body Panels, Removal and Installation).

19. Install the accelerator pedal. For additional information, refer to:
Accelerator Pedal (310-02 Acceleration Control - 4.4L, Removal and Installation),
Accelerator Pedal (310-02 Acceleration Control - 3.6L (TdV8) Diesel, Removal and Installation).

20. Install the plenum chamber drain tube.

21. Install the cowl panel grille.
For additional information, refer to: Cowl Panel Grille (501-02 Front End Body Panels, Removal and Installation).

22. Install the plenum chamber.
For additional information, refer to: Plenum Chamber (412-01 Air Distribution and Filtering, Removal and Installation).

23. Install the fuel fired booster heater.
For additional information, refer to: Fuel Fired Booster Heater (412-02 Auxiliary Heating, Removal and Installation).

ℹ	Vehicles with diesel engine

24. Install the charge air cooler pipes.
    - Secure the charge air cooler pipes.

ℹ	All vehicles

25. Install the engine. For additional information, refer to:
Engine (303-01 Engine - 4.2L, Installation),
Engine (303-01 Engine - 4.4L, Installation),
Engine (303-01 Engine - 3.6L (TdV8) Diesel, Installation).

26. Secure the A/C pipes to the front side member.

27. Install the transmission fluid cooler. For additional information, refer to:
Transmission Fluid Cooler (307-02 Transmission/Transaxle Cooling - 3.6L (TdV8) Diesel, Removal and Installation),
Transmission Fluid Cooler (307-02 Transmission/Transaxle Cooling - 4.2L, Removal and Installation),
Transmission Fluid Cooler - 4.4L (307-02 Transmission/Transaxle Cooling - 4.4L, Removal and Installation).

28.

CAUTION:

Make sure if the A/C components are damaged or contaminated during a collision, further investigation and replacement of components may be required. Failure to follow this instruction may result in damage to the vehicle.

Fill the A/C system.
For additional information, refer to: Air Conditioning (A/C) System Recovery, Evacuation and Charging (412-00 Climate Control System - General Information, General Procedures).

29. Install the radiator. For additional information, refer to:
Radiator (303-03 Engine Cooling - 3.6L (TdV8) Diesel, Removal and Installation),
Radiator (303-03 Engine Cooling - 4.2L, Removal and Installation),
Radiator (303-03 Engine Cooling - 4.4L, Removal and Installation),
Radiator (303-03 Supercharger Cooling, Removal and Installation).

30. Install the coolant expansion tank. For additional information, refer to:
Coolant Expansion Tank (303-03 Engine Cooling - 3.6L (TdV8) Diesel, Removal and Installation),
Coolant Expansion Tank (303-03 Engine Cooling - 4.2L, Removal and Installation),
Coolant Expansion Tank (303-03 Engine Cooling - 4.4L, Removal and Installation).

31.

Install the front bumper.
For additional information, refer to: Front Bumper (501-19 Bumpers, Removal and Installation).

32. Install the front bumper cover.
For additional information, refer to: Front Bumper Cover (501-19 Bumpers, Removal and Installation).

33. Install the engine undershield.
For additional information, refer to: Engine Undershield (501-02 Front End Body Panels, Removal and Installation).

34. Connect the battery ground cable.
For additional information, refer to: Specifications (414-00 Charging System - General Information, Specifications).

FRONT END SHEET METAL REPAIRS

FRONT SIDE MEMBER EXTENSION (G928704)

REMOVAL AND INSTALLATION

REMOVAL

NOTE:

In this procedure the front section of the front side member extension, the front side member outer panel and the front side member reinforcement panel are replaced.

1. Disconnect the battery ground cable.
   For additional information, refer to: Specifications (414-00, Specifications).

2. Remove the engine undershield.
   For additional information, refer to: Engine Undershield (501-02, Removal and Installation).

3. Remove the front bumper cover.
   For additional information, refer to: Front Bumper Cover (501-19, Removal and Installation).

4. Remove the front bumper.
   For additional information, refer to: Front Bumper (501-19, Removal and Installation).

5. Remove the coolant expansion tank. For additional information, refer to: (303-03)
   Coolant Expansion Tank (Removal and Installation),
   Coolant Expansion Tank (Removal and Installation),
   Coolant Expansion Tank (Removal and Installation).

6. Remove the radiator. For additional information, refer to: (303-03)
   Radiator (Removal and Installation),
   Radiator (Removal and Installation),
   Radiator (Removal and Installation),
   Radiator (Removal and Installation).

7. **CAUTION:**

   Make sure if the A/C components are damaged or contaminated during a collision, further investigation and replacement of components may be required. Failure to follow this instruction may result in damage to the vehicle.

   Recover the A/C refrigerant.
   For additional information, refer to: Air Conditioning (A/C) System Recovery, Evacuation and Charging (412-00, General Procedures).

8. Remove the transmission fluid cooler. For additional information, refer to: (307-02)
   Transmission Fluid Cooler (Removal and Installation),
   Transmission Fluid Cooler (Removal and Installation),

Transmission Fluid Cooler - 4.4L (Removal and Installation).

9. Remove the windscreen washer reservoir.
   For additional information, refer to: Windshield Washer Reservoir (501-16, Removal and Installation).

10. Remove the generator. For additional information, refer to: (414-02)
    Generator (Removal and Installation),
    Generator (Removal and Installation),
    Generator (Removal and Installation).

11. Remove the fender splash shield.
    For additional information, refer to: Fender Splash Shield (501-02, Removal and Installation).

12. Release the power steering pipes.

13. 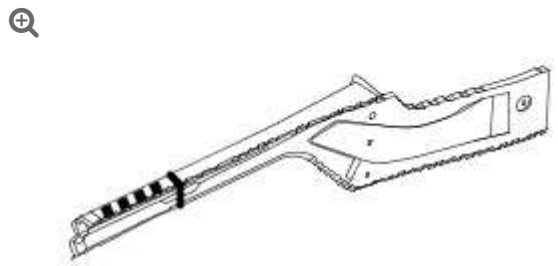
    M772213
    Remove the inner front side member extension.

14.

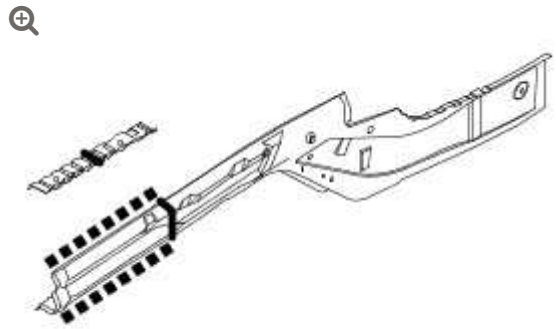

M772214

Remove the front side member extension.

15. Prepare the new panel for installation.
    For additional information, refer to: Body (501-00, Description and Operation).

INSTALLATION

1. Install the front side member extension.

2. Install the inner front side member extension.

3. Secure the power steering pipes.

4. Secure the fender splash shield.
    For additional information, refer to: Fender Splash Shield (501-02, Removal and Installation).

5. Install the generator. For additional information, refer to: (414-02)
    Generator (Removal and Installation),
    Generator (Removal and Installation),
    Generator (Removal and Installation).

6.

Install the windscreen washer reservoir.
For additional information, refer to: Windshield Washer Reservoir (501-16, Removal and Installation).

7. Install the transmission fluid cooler. For additional information, refer to: (307-02)
Transmission Fluid Cooler (Removal and Installation),
Transmission Fluid Cooler (Removal and Installation),
Transmission Fluid Cooler - 4.4L (Removal and Installation).

8. **CAUTION:**

Make sure if the A/C components are damaged or contaminated during a collision, further investigation and replacement of components may be required. Failure to follow this instruction may result in damage to the vehicle.

Fill the A/C system.
For additional information, refer to: Air Conditioning (A/C) System Recovery, Evacuation and Charging (412-00, General Procedures).

9. Install the radiator. For additional information, refer to: (303-03)
Radiator (Removal and Installation),
Radiator (Removal and Installation),
Radiator (Removal and Installation),
Radiator (Removal and Installation).

10. Install the coolant expansion tank. For additional information, refer to: (303-03)
Coolant Expansion Tank (Removal and Installation),
Coolant Expansion Tank (Removal and Installation),

Coolant Expansion Tank (Removal and Installation).

11. Install the front bumper.
    For additional information, refer to: Front Bumper (501-19, Removal and Installation).

12. Install the front bumper cover.
    For additional information, refer to: Front Bumper Cover (501-19, Removal and Installation).

13. Install the engine undershield.
    For additional information, refer to: Engine Undershield (501-02, Removal and Installation).

14. Connect the battery ground cable.
    For additional information, refer to: Specifications (414-00, Specifications).

FRONT END SHEET METAL REPAIRS

SIDE MEMBER DEFORMATION ELEMENT

(G935714)

REMOVAL AND INSTALLATION

REMOVAL

	All vehicles

1. Disconnect the battery ground cable.
   For additional information, refer to: Specifications (414-00, Specifications).

2. Remove the generator. For additional information, refer to: (414-02)
   Generator (Removal and Installation),
   Generator (Removal and Installation),
   Generator (Removal and Installation).

3. Remove the engine undershield.
   For additional information, refer to: Engine Undershield (501-02, Removal and Installation).

4. Remove the front bumper cover.
   For additional information, refer to: Front Bumper Cover (501-19, Removal and Installation).

5. Remove the front bumper.
   For additional information, refer to: Front Bumper (501-19, Removal and Installation).

6. Remove the coolant expansion tank. For additional information, refer to: (303-03)
   Coolant Expansion Tank (Removal and Installation),
   Coolant Expansion Tank (Removal and Installation),
   Coolant Expansion Tank (Removal and Installation).

7. Remove the radiator. For additional information, refer to: (303-03)
   Radiator (Removal and Installation),
   Radiator (Removal and Installation),
   Radiator (Removal and Installation),
   Radiator (Removal and Installation).

8. Remove the transmission fluid cooler. For additional information, refer to: (307-02)
   Transmission Fluid Cooler (Removal and Installation),
   Transmission Fluid Cooler (Removal and Installation),
   Transmission Fluid Cooler - 4.4L (Removal and Installation).

ℹ	Vehicles with diesel engine

9. Remove the charge air cooler pipes.
   - Release the charge air cooler pipes.

ℹ	All vehicles

10. Remove the windscreen washer reservoir.
    For additional information, refer to: Windshield Washer Reservoir (501-16, Removal and Installation).

11. Remove the side member deformation element.

12. Prepare the new panel for installation.
    For additional information, refer to: Body (501-00, Description and Operation).

INSTALLATION

ℹ	All vehicles

1. Install the windscreen washer reservoir.
   For additional information, refer to: Windshield Washer Reservoir (501-16, Removal and Installation).

ℹ	Vehicles with diesel engine

2. Install the charge air cooler pipes.
   - Secure the charge air cooler pipes.

ℹ	All vehicles

3. Install the transmission fluid cooler. For additional information, refer to: (307-02)
   Transmission Fluid Cooler (Removal and Installation),
   Transmission Fluid Cooler - 4.4L (Removal and Installation),
   Transmission Fluid Cooler (Removal and Installation).

4.

Install the radiator. For additional information, refer to: (303-03)
Radiator (Removal and Installation),
Radiator (Removal and Installation),
Radiator (Removal and Installation),
Radiator (Removal and Installation).

5. Install the coolant expansion tank. For additional information, refer to: (303-03)
Coolant Expansion Tank (Removal and Installation),
Coolant Expansion Tank (Removal and Installation),
Coolant Expansion Tank (Removal and Installation).

6. Install the front bumper.
For additional information, refer to: Front Bumper (501-19, Removal and Installation).

7. Install the front bumper cover.
For additional information, refer to: Front Bumper Cover (501-19, Removal and Installation).

8. Install the engine undershield.
For additional information, refer to: Engine Undershield (501-02, Removal and Installation).

9. Install the generator. For additional information, refer to: (414-02)
Generator (Removal and Installation),
Generator (Removal and Installation),
Generator (Removal and Installation).

10. Connect the battery ground cable.
For additional information, refer to: Specifications (414-00, Specifications).

ROOF SHEET METAL REPAIRS

ROOF PANEL (G928705)

REMOVAL AND INSTALLATION

REMOVAL

1. Disconnect the battery ground cable.
   For additional information, refer to: Specifications (414-00, Specifications).
2. Disconnect the generator connector.
3. Remove the windshield glass.
   For additional information, refer to: Windshield Glass (501-11, Removal and Installation).
4. Remove the liftgate assembly.
5. Remove the liftgate aperture seal.
6. Remove the front seats.
   For additional information, refer to: Front Seat (501-10, Removal and Installation).
7.

Remove the rear seat cushion cover.
For additional information, refer to: Rear Seat Cushion Cover (501-10, Removal and Installation).

8. Remove the headliner.
For additional information, refer to: Headliner (501-05, Removal and Installation).

9. Remove the roof opening panel.
For additional information, refer to: Roof Opening Panel (501-17, Removal and Installation).

10. Remove the wiring harnesses from the roof panel area.

11. 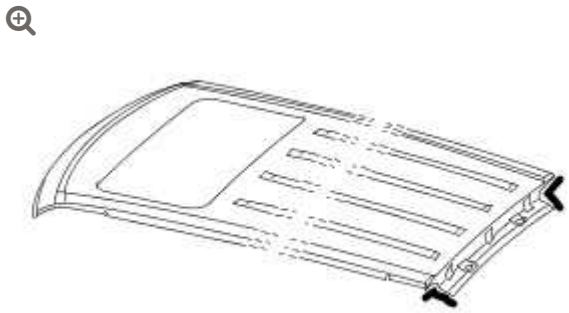

M772204

Remove existing panel(s), prepare panel joint faces and install new panel(s) in accordance with the Panel Replacement Procedure. Punch or drill holes in new panel for plug welding as shown.
For additional information, refer to: Body (501-00, Description and Operation).

INSTALLATION

1. Install the wiring harnesses to the roof panel areas.

2. Install the roof opening panel.
   For additional information, refer to: Roof Opening Panel (501-17, Removal and Installation).

3. Install the windshield glass.
   For additional information, refer to: Windshield Glass (501-11, Removal and Installation).

4. Install the headliner.
   For additional information, refer to: Headliner (501-05, Removal and Installation).

5. Install the liftgate assembly.

6. Install the liftgate aperture seal.

7. Install the rear seat cushion cover.
   For additional information, refer to: Rear Seat Cushion Cover (501-10, Removal and Installation).

8. Install the front seats.
   For additional information, refer to: Front Seat (501-10, Removal and Installation).

9. Connect the generator connector.

10. Connect the battery ground cable.
    For additional information, refer to: Specifications (414-00, Specifications).

SIDE PANEL SHEET METAL REPAIRS

A-PILLAR ASSEMBLY (G928727)

REMOVAL AND INSTALLATION

REMOVAL

1. Disconnect the battery ground cable.
   For additional information, refer to: Specifications (414-00, Specifications).
2. Disconnect the generator electrical connector.
3. Remove the fender apron panel.
   For additional information, refer to: Fender Apron Panel (501-27, Removal and Installation).
4. Remove the battery tray.
   For additional information, refer to: Battery Tray (414-01, Removal and Installation).
5. Remove the brake booster. For additional information, refer to: (206-07)
   Brake Booster - Vehicles With: Standard Brakes (Removal and Installation),

Brake Booster - Vehicles With: High Performance Brakes (Removal and Installation).

6. Remove the plenum chamber.
   For additional information, refer to: Plenum Chamber (412-01, Removal and Installation).

7. Remove the cowl panel grille.
   For additional information, refer to: Cowl Panel Grille (501-02, Removal and Installation).

8. Remove the front seat.
   For additional information, refer to: Front Seat (501-10, Removal and Installation).

9. Remove the front side air curtain module.
   For additional information, refer to: Front Side Air Curtain Module (501-20, Removal and Installation).

10. Remove the front and rear door aperture weatherstrips.

11. Remove the front door check strap.

12. Remove the rocker panel moulding.
    For additional information, refer to: Rocker Panel Moulding (501-08, Removal and Installation).

13. Release the floor covering for access.

14. Reposition the A-pillar wiring harness.
    - Release the A-pillar wiring harness.

15.

Remove the overhead console.
For additional information, refer to: Overhead Console (501-12, Removal and Installation).

16. Remove the insulation material from the instrument panel lower section.

17.

CAUTION:

Make sure damage does not occur to the A-pillar drain tube when removing the A-pillar.

NOTE:

The A-pillar drain tube is located inside the A-pillar. The 'A' and 'B' arrows show the locations of the drain tube clips.

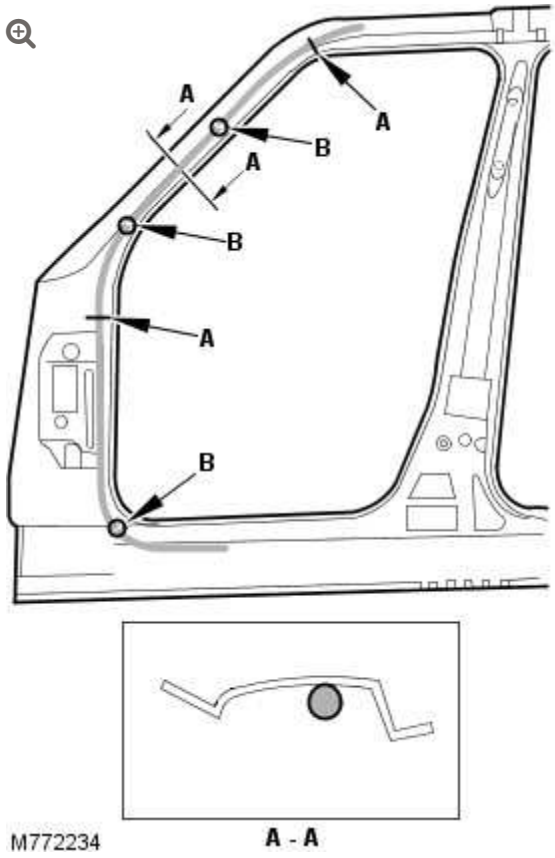

Remove the A-pillar drain tube.

18.

CAUTION:

Make sure damage does not occur to the A-pillar drain tube when removing the A-pillar.

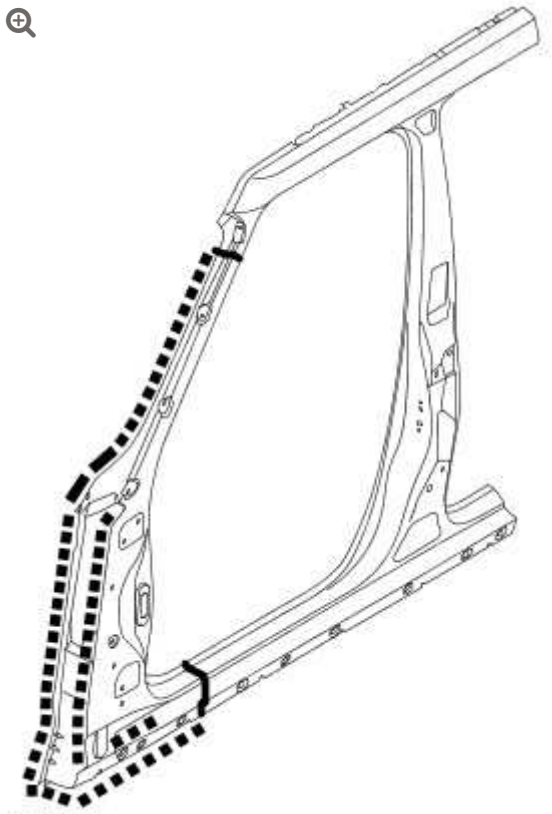

Remove the A-pillar.

19. Prepare the new panel for installation.
For additional information, refer to: Body (501-00, Description and Operation).

INSTALLATION

1. Install the A-pillar trim panel.

2. Install the A-pillar drain tube.

3. Install the insulation material to the instrument panel lower section.

4.

Install the overhead console.
For additional information, refer to: Overhead Console (501-12, Removal and Installation).

5. Reposition the A-pillar wiring harness.
   - Secure the A-pillar wiring harness.

6. Secure the floor covering.

7. Install the rocker panel moulding.
   For additional information, refer to: Rocker Panel Moulding (501-08, Removal and Installation).

8. Install the front door check strap.

9. Install the front and rear door aperture weatherstrips.

10. Install the front side air curtain module.
    For additional information, refer to: Front Side Air Curtain Module (501-20, Removal and Installation).

11. Install the front seat.
    For additional information, refer to: Front Seat (501-10, Removal and Installation).

12. Install the cowl panel grille.
    For additional information, refer to: Cowl Panel Grille (501-02, Removal and Installation).

13. Install the plenum chamber.
    For additional information, refer to: Plenum Chamber (412-01, Removal and Installation).

14.

Install the brake booster. For additional information, refer to: (206-07)
Brake Booster - Vehicles With: Standard Brakes (Removal and Installation),
Brake Booster - Vehicles With: High Performance Brakes (Removal and Installation).

15. Install the battery tray.
For additional information, refer to: Battery Tray (414-01, Removal and Installation).

16. Install the fender apron panel.
For additional information, refer to: Fender Apron Panel (501-27, Removal and Installation).

17. Connect the generator electrical connector.

18. Connect the battery ground cable.
For additional information, refer to: Specifications (414-00, Specifications).

SIDE PANEL SHEET METAL REPAIRS

A-PILLAR REINFORCEMENT (G928728)

REMOVAL AND INSTALLATION

REMOVAL

NOTES:

- This procedure is the same as the procedure for A-pillar assembly.
- The A-pillar reinforcement is the supplied as an assembly and includes the A-pillar assembly. Before installing the A-pillar reinforcement it is necessary to release it from the A-pillar assembly, this will allow access for welding to be carried out to the A-pillar reinforcement.

1. Disconnect the battery ground cable.
   For additional information, refer to: Specifications (414-00, Specifications).

2. Disconnect the generator electrical connector.

3.

Remove the A-pillar assembly.
For additional information, refer to: A-Pillar Assembly (501-29, Removal and Installation).

4. **CAUTION:**

> Make sure damage does not occur to the A-pillar drain tube when removing the A-pillar reinforcement.

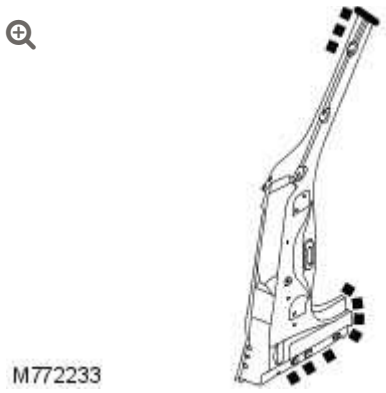

Remove the A-pillar reinforcement.

5. Prepare the new panel for installation.
For additional information, refer to: Body (501-00, Description and Operation).

INSTALLATION

1. Install the A-pillar reinforcement.

2. Install the A-pillar assembly.
For additional information, refer to: A-Pillar Assembly (501-29, Removal and Installation).

3. Connect the generator electrical connector.

4. Connect the battery ground cable.
   For additional information, refer to: Specifications (414-00, Specifications).

SIDE PANEL SHEET METAL REPAIRS

B AND C-PILLAR ASSEMBLY (G928729)

REMOVAL AND INSTALLATION

REMOVAL

NOTE:

This procedure includes the replacement of the rocker panel section.

1. Disconnect the battery ground cable.
   For additional information, refer to: Specifications (414-00, Specifications).

2. Disconnect the generator electrical connector.

3. Remove the rocker panel section.
   For additional information, refer to: Rocker Panel Section (501-29, Removal and Installation).

4.

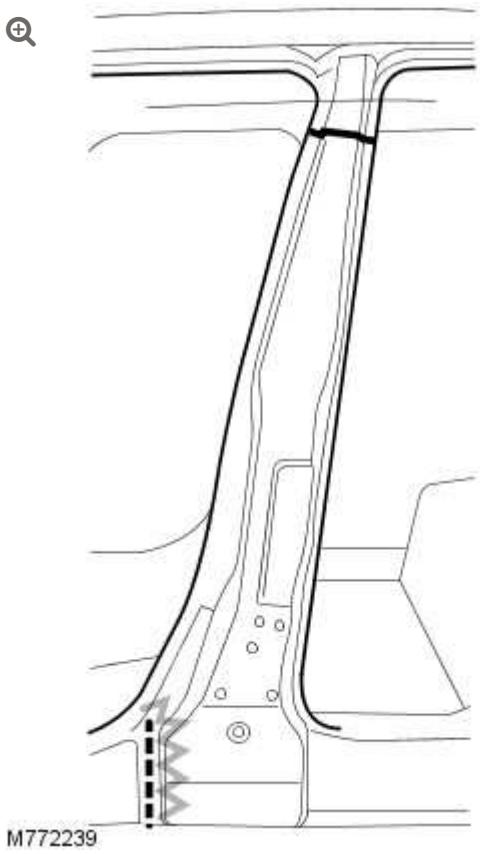

Remove the B and C-pillar assembly.

5. Prepare the new panel for installation.
   For additional information, refer to: Body (501-00, Description and Operation).

INSTALLATION

1. Install the B and C-pillar assembly.

2. Install the rocker panel section.
   For additional information, refer to: Rocker Panel Section (501-29, Removal and Installation).

3. Connect the generator electrical connector.

4.

Connect the battery ground cable.

For additional information, refer to: Specifications (414-00, Specifications).

SIDE PANEL SHEET METAL REPAIRS

ROCKER PANEL (G928730)

REMOVAL AND INSTALLATION

REMOVAL

1. Disconnect the battery ground cable.
   For additional information, refer to: Specifications (414-00, Specifications).
2. Disconnect the generator electrical connector.
3. Remove the rear wheel and tire.
   For additional information, refer to: Wheel and Tire (204-04, Removal and Installation).
4. Remove the front and rear doors.
   For additional information, refer to: Door (501-03, Removal and Installation).
5. Remove the B-pillar side impact sensor.
   For additional information, refer to: B-Pillar Side Impact Sensor (501-20, Removal and Installation).
6.

Remove the front safety belt retractor.
For additional information, refer to: Front Safety Belt Retractor (501-20, Removal and Installation).

7. Remove the front scuff plate trim panel.
For additional information, refer to: Front Scuff Plate Trim Panel (501-05, Removal and Installation).

8. Remove the rear scuff plate trim panel.
For additional information, refer to: Rear Scuff Plate Trim Panel (501-05, Removal and Installation).

9. Remove the front and rear door aperture weatherstrips.

10. Remove the front seat.
For additional information, refer to: Front Seat (501-10, Removal and Installation).

11. Remove the rear seat.
For additional information, refer to: Rear Seat (501-10, Removal and Installation).

12. Reposition the floor covering.

13. Remove the air suspension reservoir.
For additional information, refer to: Air Suspension Reservoir (204-05, Removal and Installation).

14. Remove the exhaust system. For additional information, refer to: (309-00)
Exhaust System (Removal and Installation),
Exhaust System (Removal and Installation),
Exhaust System (Removal and Installation).

15. Remove the fuel tank shield.

16. Reposition the wiring harness from the sill.
    - Release the wiring harness.

17. 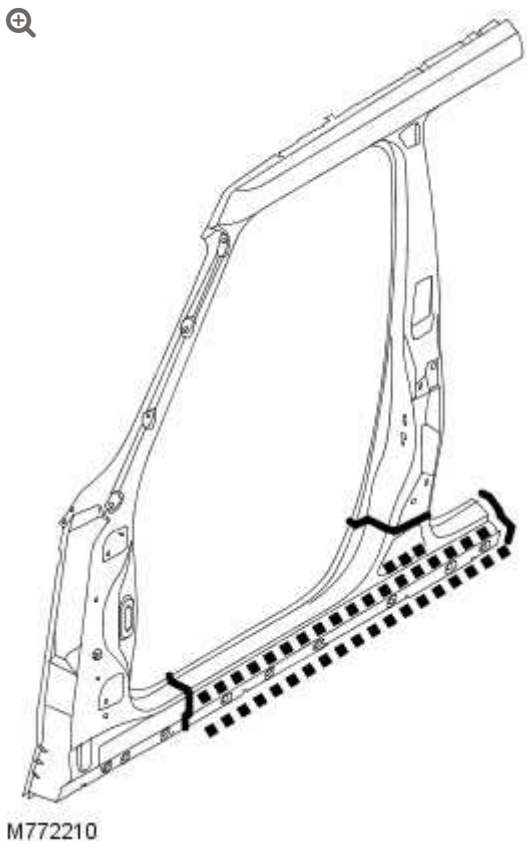

    Remove the rocker panel.

18. Prepare the new panel for installation.
    For additional information, refer to: Body (501-00, Description and Operation).

INSTALLATION

1. Install the rocker panel.

2. Reposition the wiring harness to the sill.

- Secure the wiring harness.

3. Install the exhaust system. For additional information, refer to: (309-00)
   Exhaust System (Removal and Installation),
   Exhaust System (Removal and Installation),
   Exhaust System (Removal and Installation).

4. Install the air suspension reservoir.
   For additional information, refer to: Air Suspension Reservoir (204-05, Removal and Installation).

5. Reposition the floor covering.

6. Install the rear seat.
   For additional information, refer to: Rear Seat (501-10, Removal and Installation).

7. Install the front seat.
   For additional information, refer to: Front Seat (501-10, Removal and Installation).

8. Install the front and rear door aperture weatherstrips.

9. Install the rear scuff plate trim panel.
   For additional information, refer to: Rear Scuff Plate Trim Panel (501-05, Removal and Installation).

10. Install the front scuff plate trim panel.
    For additional information, refer to: Front Scuff Plate Trim Panel (501-05, Removal and Installation).

11.

Install the front safety belt retractor.
For additional information, refer to: Front Safety Belt Retractor (501-20, Removal and Installation).

12. Install the B-pillar side impact sensor.
For additional information, refer to: B-Pillar Side Impact Sensor (501-20, Removal and Installation).

13. Install the front and rear doors.
For additional information, refer to: Door (501-03, Removal and Installation).

14. Install the rear wheel and tire.
For additional information, refer to: Wheel and Tire (204-04, Removal and Installation).

15. Connect the generator electrical connector.

16. Connect the battery ground cable.
For additional information, refer to: Specifications (414-00, Specifications).

SIDE PANEL SHEET METAL REPAIRS

ROCKER PANEL INNER REINFORCEMENT (G928731)

REMOVAL AND INSTALLATION

REMOVAL

NOTE:

This procedure includes the replacement of the rocker panel.

1. Disconnect the battery ground cable.
   For additional information, refer to: Specifications (414-00, Specifications).
2. Disconnect the generator electrical connector.
3. Remove the rocker panel.
   For additional information, refer to: Rocker Panel (501-29, Removal and Installation).
4.

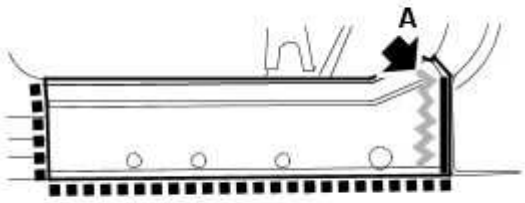

M772226

Remove the rocker panel inner reinforcement.

5. Prepare the new panel for installation.
   For additional information, refer to: Body (501-00, Description and Operation).

INSTALLATION

1. Install the rocker panel inner reinforcement.

2. Install the rocker panel.
   For additional information, refer to: Rocker Panel (501-29, Removal and Installation).

3. Connect the generator electrical connector.

4. Connect the battery ground cable.
   For additional information, refer to: Specifications (414-00, Specifications).

SIDE PANEL SHEET METAL REPAIRS

ROCKER PANEL SECTION

(G928732)

REMOVAL AND INSTALLATION

REMOVAL

1. Disconnect the battery ground cable.
   For additional information, refer to: Specifications (414-00, Specifications).
2. Disconnect the generator electrical connector.
3. Remove the rocker panel.
   For additional information, refer to: Rocker Panel (501-29, Removal and Installation).
4. Remove the headliner.
   For additional information, refer to: Headliner (501-05, Removal and Installation).
5.

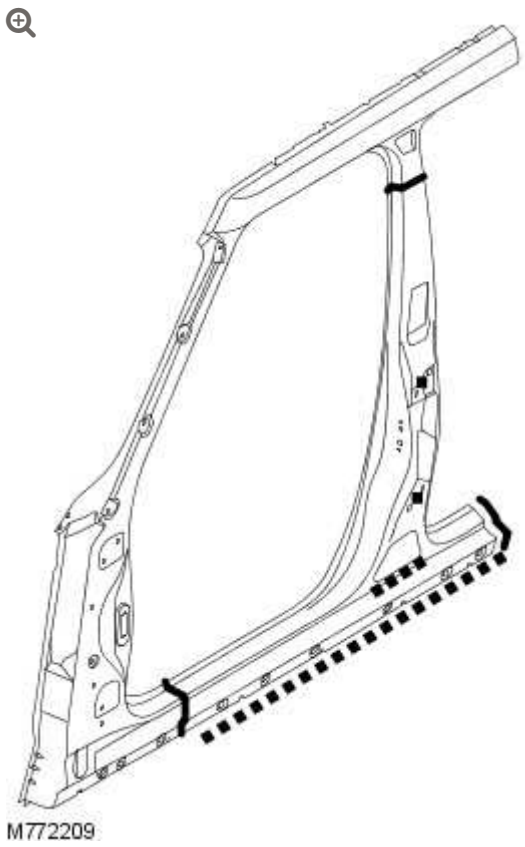

Remove the rocker panel section.

6. Prepare the new panel for installation.
   For additional information, refer to: Body (501-00, Description and Operation).

INSTALLATION

1. Install the rocker panel section.

2. Install the headliner.
   For additional information, refer to: Headliner (501-05, Removal and Installation).

3. Install the rocker panel.
   For additional information, refer to: Rocker Panel (501-29, Removal and Installation).

4. Connect the generator electrical connector.

5. Connect the battery ground cable.
   For additional information, refer to: Specifications (414-00, Specifications).

REAR END SHEET METAL REPAIRS

INNER QUARTER PANEL

(G928765)

REMOVAL AND INSTALLATION

REMOVAL

NOTE:

In this procedure, the quarter panel and the rear quarter upper panel are replaced in conjunction with the C-pillar assembly.

1. Disconnect the battery ground cable.
   For additional information, refer to: Specifications (414-00, Specifications).

2. Disconnect the generator electrical connector.

3. Remove the quarter panel.
   For additional information, refer to: Quarter Panel (501-30, Removal and Installation).

4.

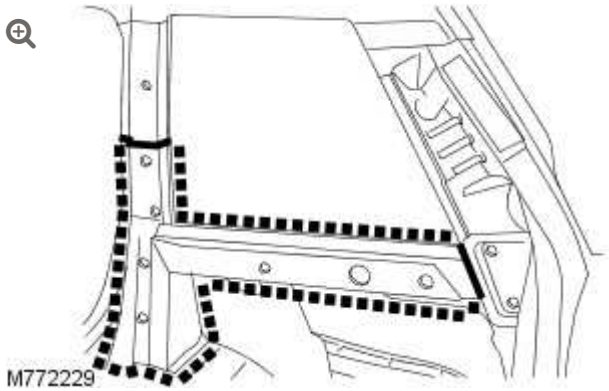

Prepare the new panel for installation.
For additional information, refer to: Body (501-00, Description and Operation).

INSTALLATION

1. Install the inner quarter panel.
   For additional information, refer to: Body (501-00, Description and Operation).
2. Install the quarter panel.
   For additional information, refer to: Quarter Panel (501-30, Removal and Installation).
3. Connect the generator electrical connector.
4. Connect the battery ground cable.
   For additional information, refer to: Specifications (414-00, Specifications).

REAR END SHEET METAL REPAIRS

QUARTER PANEL (G928766)

REMOVAL AND INSTALLATION

REMOVAL

NOTE:

In this procedure, the rear outer body side panel is replaced in conjunction with the quarter panel.

1. Disconnect the battery ground cable.
   For additional information, refer to: Specifications (414-00 Charging System - General Information, Specifications).
2. Disconnect the generator electrical connector.
3. Remove the wheel and tire.
   For additional information, refer to: Wheel and Tire (204-04 Wheels and Tires, Removal and Installation).
4. Remove the rear door.
   For additional information, refer to: Door (501-03 Body Closures, Removal and Installation).

5. Remove the rear door and tailgate aperture weatherstrips.

6. Remove the rear door and tailgate strikers.

7. Remove the rocker panel moulding.
   For additional information, refer to: Rocker Panel Moulding (501-08 Exterior Trim and Ornamentation, Removal and Installation).

8. Remove the rear bumper.
   For additional information, refer to: Rear Bumper (501-19 Bumpers, Removal and Installation).

9. Remove the rear fender splash shield.
   For additional information, refer to: Rear Fender Splash Shield (501-08 Exterior Trim and Ornamentation, Removal and Installation).

10. Remove the exhaust system. For additional information, refer to:
    Exhaust System (309-00 Exhaust System - 4.2L, Removal and Installation),
    Exhaust System (309-00 Exhaust System - 4.4L, Removal and Installation),
    Exhaust System (309-00 Exhaust System - 3.6L (TdV8) Diesel, Removal and Installation).

11. Remove the rear quarter panel moulding.
    For additional information, refer to: Rear Quarter Panel Moulding (501-08 Exterior Trim and Ornamentation, Removal and Installation).

12. Remove the rear quarter window glass.
    For additional information, refer to: Rear Quarter Window

Glass (501-11 Glass, Frames and Mechanisms, Removal and Installation).

13. Remove the rear lamp assembly.
For additional information, refer to: Rear Lamp Assembly (417-01 Exterior Lighting, Removal and Installation).

14. **NOTE:**

RH side only:

Drain the fuel tank.
For additional information, refer to: Fuel Tank Draining (310-00 Fuel System - General Information, General Procedures).

15. **NOTE:**

RH side only:

Remove the fuel tank filler pipe. For additional information, refer to: (310-01)
Fuel Tank Filler Pipe (Removal and Installation),
Fuel Tank Filler Pipe (Removal and Installation),
Fuel Tank Filler Pipe (Removal and Installation).

16. Remove the air suspension rear solenoid valve block.
For additional information, refer to: Air Suspension Rear Solenoid Valve Block (204-05 Vehicle Dynamic Suspension, Removal and Installation).

17. Remove the C-pillar lower trim panel.
For additional information, refer to: C-Pillar Lower Trim

Panel (501-05 Interior Trim and Ornamentation, Removal and Installation).

18. Remove the rear safety belt retractor.
    For additional information, refer to: Rear Safety Belt Retractor (501-20 Safety Belt System, Removal and Installation).

19. Remove the rear quarter trim panel.
    For additional information, refer to: Rear Quarter Trim Panel (501-05 Interior Trim and Ornamentation, Removal and Installation).

20. Release the rear floor covering and reposition for access.

21. Remove all information and entertainment components from the rear quarter area.

22. Remove the luggage compartment floor covering.

23. Remove the insulation from the rear quarter area.

24. Release the wiring harness from the D-pillar and rear quarter area.

25. **CAUTION:**

    Make sure when cutting out the body side panel, that you do not cut through the reinforcement panel, as a rubber drain tube is located behind it. The approximate position of the drain tube is shown in the illustration. Failure to follow this instruction will result in damage to the vehicle.

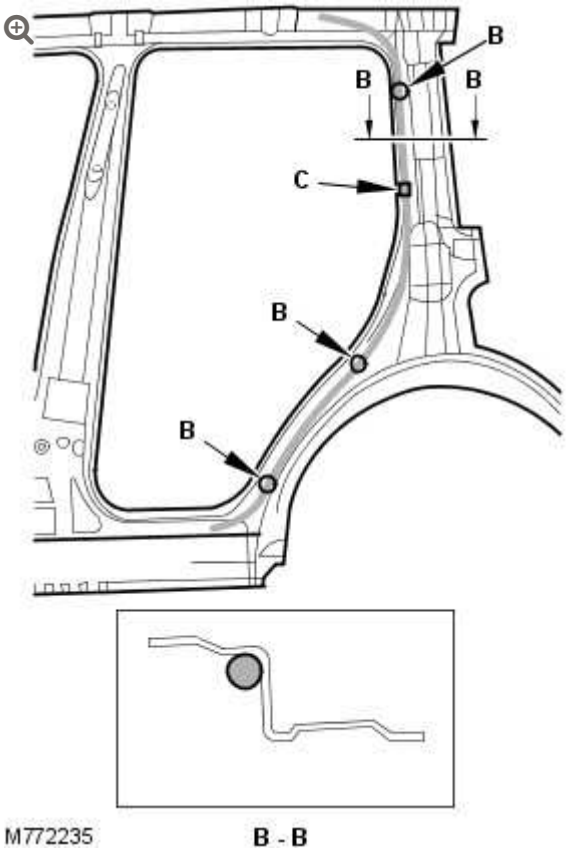

Release the drain tube.

26.

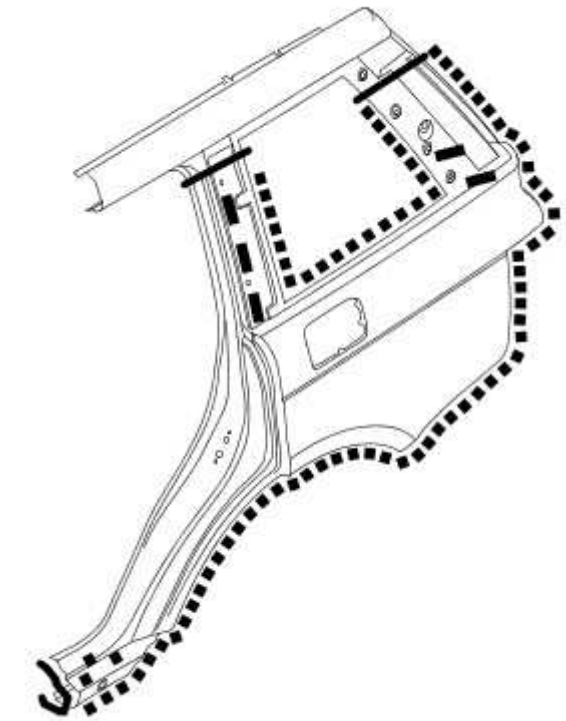

M772208

Remove the quarter panel.

27. Prepare the new panel for installation.
For additional information, refer to: Body (501-00 Body System - General Information, Description and Operation).

INSTALLATION

1. Install the insulation to the rear quarter area.

2. Install the wiring harness to the D-pillar and rear quarter area.

3. Install the luggage compartment floor covering.

4. Install the information and entertainment components to the rear quarter area.

5. Install the rear quarter trim panel.
   For additional information, refer to: Rear Quarter Trim Panel (501-05 Interior Trim and Ornamentation, Removal and Installation).

6. Secure the rear floor covering.

7. Install the rear safety belt retractor.

8. Install the C-pillar lower trim panel.
   For additional information, refer to: C-Pillar Lower Trim Panel (501-05 Interior Trim and Ornamentation, Removal and Installation).

9. Install the air suspension rear solenoid valve block.
   For additional information, refer to: Air Suspension Rear Solenoid Valve Block (204-05 Vehicle Dynamic Suspension, Removal and Installation).

10. **NOTE:**

    RH side only:

    Install the fuel tank filler pipe. For additional information, refer to: (310-01)
    Fuel Tank Filler Pipe (Removal and Installation),
    Fuel Tank Filler Pipe (Removal and Installation),
    Fuel Tank Filler Pipe (Removal and Installation).

11. **NOTE:**

    RH side only:

Fill the fuel tank with the amount of fuel recovered.
For additional information, refer to: Fuel Tank Draining (310-00 Fuel System - General Information, General Procedures).

12. Install the rear lamp assembly.
For additional information, refer to: Rear Lamp Assembly (417-01 Exterior Lighting, Removal and Installation).

13. Install the rear quarter window glass.
For additional information, refer to: Rear Quarter Window Glass (501-11 Glass, Frames and Mechanisms, Removal and Installation).

14. Install the rear quarter panel moulding.
For additional information, refer to: Rear Quarter Panel Moulding (501-08 Exterior Trim and Ornamentation, Removal and Installation).

15. Install the exhaust system. For additional information, refer to:
Exhaust System (309-00 Exhaust System - 4.2L, Removal and Installation),
Exhaust System (309-00 Exhaust System - 4.4L, Removal and Installation),
Exhaust System (309-00 Exhaust System - 3.6L (TdV8) Diesel, Removal and Installation).

16. Install the rear fender splash shield.
For additional information, refer to: Rear Fender Splash Shield (501-08 Exterior Trim and Ornamentation, Removal and Installation).

17. Install the rear bumper.
For additional information, refer to: Rear Bumper (501-19 Bumpers, Removal and Installation).

18. Install the rocker panel moulding.
    For additional information, refer to: Rocker Panel Moulding (501-08 Exterior Trim and Ornamentation, Removal and Installation).

19. Install the rear door and tailgate strikers.

20. Install the rear door and tailgate aperture weatherstrips.

21. Install the rear door.
    For additional information, refer to: Door (501-03 Body Closures, Removal and Installation).

22. Install the wheel and tire.
    For additional information, refer to: Wheel and Tire (204-04 Wheels and Tires, Removal and Installation).

23. Connect the generator electrical connector.

24. Connect the battery ground cable.
    For additional information, refer to: Specifications (414-00 Charging System - General Information, Specifications).

REAR END SHEET METAL REPAIRS

QUARTER PANEL LOWER EXTENSION (G928767)

REMOVAL AND INSTALLATION

REMOVAL

NOTE:

In this procedure, the quarter panel lower extension is completed in conjunction with the quarter panel.

1. Disconnect the battery ground cable.
   For additional information, refer to: Specifications (414-00, Specifications).

2. Disconnect the generator electrical connector.

3. Remove the quarter panel.
   For additional information, refer to: Quarter Panel (501-30, Removal and Installation).

4.

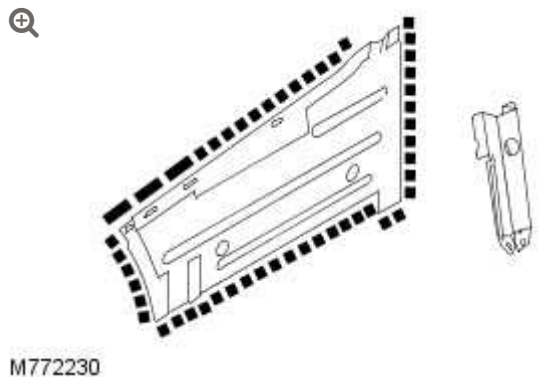

M772230

Prepare the new panel for installation.
For additional information, refer to: Body (501-00, Description and Operation).

INSTALLATION

1. Install the quarter panel lower extension.
   For additional information, refer to: Body (501-00, Description and Operation).

2. Install the quarter panel.
   For additional information, refer to: Quarter Panel (501-30, Removal and Installation).

3. Connect the generator electrical connector.

4. Connect the battery ground cable.
   For additional information, refer to: Specifications (414-00, Specifications).

REAR END SHEET METAL REPAIRS

REAR CROSSMEMBER (G928247)

REMOVAL AND INSTALLATION

REMOVAL

1. Disconnect the battery ground cable.
   For additional information, refer to: Specifications (414-00 Charging System - General Information, Specifications).
2. Disconnect the generator electrical connector.
3. Remove the tailgate.
4. Remove the tailgate aperture weatherstrip.
5. Remove the rear bumper.
   For additional information, refer to: Rear Bumper (501-19 Bumpers, Removal and Installation).
6. Remove the towbar.
   For additional information, refer to: Towbar (501-08 Exterior Trim and Ornamentation, Removal and Installation).
7.

Remove the exhaust system. For additional information, refer to: (309-00)
Exhaust System (Removal and Installation),
Exhaust System (Removal and Installation),
Exhaust System (Removal and Installation).

8. Remove both rear lamp assemblies.
For additional information, refer to: Rear Lamp Assembly (417-01 Exterior Lighting, Removal and Installation).

9. Remove the air suspension compressor assembly.
For additional information, refer to: Air Suspension Compressor (204-05 Vehicle Dynamic Suspension, Removal and Installation).

10. 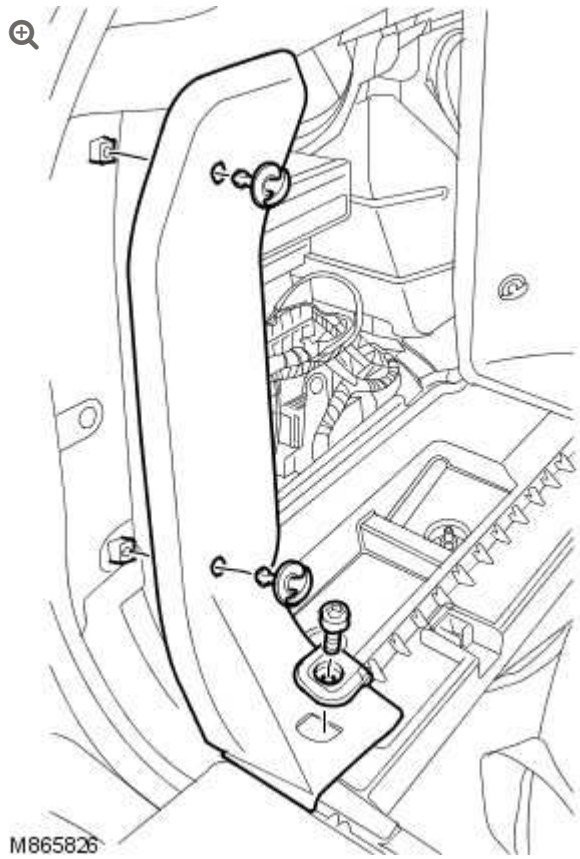

Remove the LH and RH finisher trim panels.

11. Remove the luggage compartment floor covering.

12. Release the wiring harness from the rear crossmember area.

13.

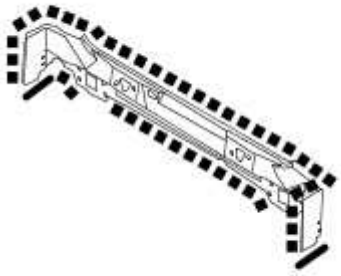

M772205

Prepare the new panel for installation.
For additional information, refer to: Body (501-00 Body System - General Information, Description and Operation).

INSTALLATION

1. Install the rear crossmember.
   For additional information, refer to: Body (501-00 Body System - General Information, Description and Operation).

2. Secure the wiring harness to the rear crossmember area.

3. Install the luggage compartment floor covering.

4. Install the LH and RH finisher trim panels.

5. Install the air suspension compressor assembly.
   For additional information, refer to: Air Suspension Compressor (204-05 Vehicle Dynamic Suspension, Removal and Installation).

6.

Install the rear lamp assemblies.
For additional information, refer to: Rear Lamp Assembly (417-01 Exterior Lighting, Removal and Installation).

7. Install the rear bumper.
For additional information, refer to: Rear Bumper (501-19 Bumpers, Removal and Installation).

8. Install the towbar.
For additional information, refer to: Towbar (501-08 Exterior Trim and Ornamentation, Removal and Installation).

9. Install the exhaust system. For additional information, refer to: (309-00)
Exhaust System (Removal and Installation),
Exhaust System (Removal and Installation),
Exhaust System (Removal and Installation).

10. Install the tailgate.

11. Install the tailgate aperture weatherstrip.

12. Connect the generator electrical connector.

13. Connect the battery ground cable.
For additional information, refer to: Specifications (414-00 Charging System - General Information, Specifications).

REAR END SHEET METAL REPAIRS

REAR CROSSMEMBER SECTION (G928248)

REMOVAL AND INSTALLATION

REMOVAL

NOTE:

The procedure to remove the rear crossmember section is the same as the rear crossmember.

1. Disconnect the battery ground cable.
   For additional information, refer to: Specifications (414-00, Specifications).

2. Disconnect the generator electrical connector.

3. Remove the rear crossmember.
   For additional information, refer to: Rear Crossmember (501-30, Removal and Installation).

4.

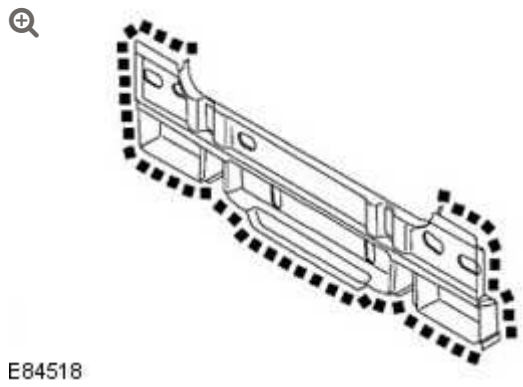

Prepare the new panel for installation.
For additional information, refer to: Body (501-00, Description and Operation).

INSTALLATION

1. Install the rear crossmember section.
   For additional information, refer to: Body (501-00, Description and Operation).
2. Install the rear crossmember.
   For additional information, refer to: Body (501-00, Description and Operation).
3. Connect the generator electrical connector.
4. Connect the battery ground cable.
   For additional information, refer to: Specifications (414-00, Specifications).

REAR END SHEET METAL REPAIRS

REAR FLOOR PANEL SECTION (G928249)

REMOVAL AND INSTALLATION

REMOVAL

NOTE:

The rear floor panel section is replaced with either the rear crossmember section or the quarter panel.

1. Disconnect the battery ground cable.
   For additional information, refer to: Specifications (414-00, Specifications).

2. Disconnect the generator electrical connector.

3. Remove the rear crossmember section or the quarter panel.
   For additional information, refer to: (501-30)
   Rear Crossmember Section (Removal and Installation),
   Quarter Panel (Removal and Installation).

4. Remove the heat shield from the spare wheel well.

5.

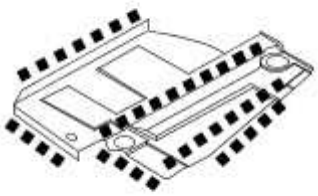

M772206

Prepare the new panel for installation.
For additional information, refer to: Body (501-00, Description and Operation).

INSTALLATION

1. Install the rear floor panel section.
   For additional information, refer to: Body (501-00, Description and Operation).

2. Install the heat shield to the spare wheel well.

3. Install the rear crossmember section or the quarter panel.
   For additional information, refer to: (501-30) Rear Crossmember Section (Removal and Installation), Quarter Panel (Removal and Installation).

4. Connect the generator electrical connector.

5. Connect the battery ground cable.
   For additional information, refer to: Specifications (414-00, Specifications).

REAR END SHEET METAL REPAIRS

REAR LAMP MOUNTING PANEL (G928769)

REMOVAL AND INSTALLATION

REMOVAL

NOTE:

The rear lamp mounting panel may be changed with the quarter panel or the rear crossmember. The drain channel may also be changed in this procedure.

1. Disconnect the battery ground cable.
   For additional information, refer to: Specifications (414-00, Specifications).

2. Disconnect the generator electrical connector.

3. Remove the quarter panel.
   For additional information, refer to: Quarter Panel (501-30, Removal and Installation).

4.



Prepare the new panel for installation.
For additional information, refer to: Body (501-00, Description and Operation).

5.

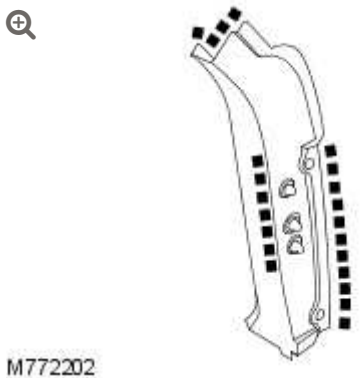

Prepare the new panel for installation.
For additional information, refer to: Body (501-00, Description and Operation).

INSTALLATION

1. Install the quarter panel.
   For additional information, refer to: Quarter Panel (501-30, Removal and Installation).

2. Connect the generator electrical connector.

3.

Connect the battery ground cable.

For additional information, refer to: Specifications (414-00, Specifications).

REAR END SHEET METAL REPAIRS

REAR QUARTER UPPER PANEL (G928770)

REMOVAL AND INSTALLATION

REMOVAL

NOTES:

- In this procedure, the rear quarter upper panel is replaced with the quarter panel.
- The rear quarter upper panel must be removed before the rear wheelhouse assembly can be removed.

1. Disconnect the battery ground cable.
   For additional information, refer to: Specifications (414-00, Specifications).

2. Disconnect the generator electrical connector.

3. Remove the quarter panel.
   For additional information, refer to: Quarter Panel (501-30, Removal and Installation).

4. 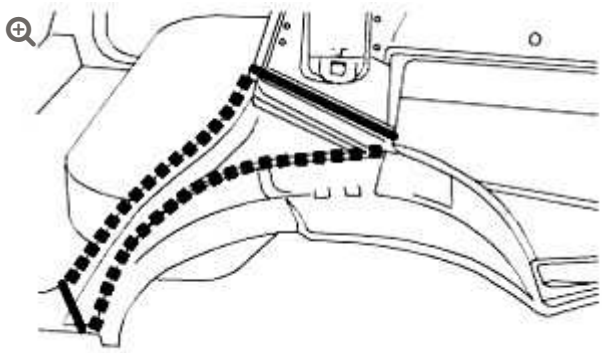

E84516

Prepare the new panel for installation.
For additional information, refer to: Body (501-00, Description and Operation).

INSTALLATION

1. Install the rear quarter upper panel.
   For additional information, refer to: Body (501-00, Description and Operation).

2. Install the quarter panel.
   For additional information, refer to: Quarter Panel (501-30, Removal and Installation).

3. Connect the generator electrical connector.

4. Connect the battery ground cable.
   For additional information, refer to: Specifications (414-00, Specifications).

REAR END SHEET METAL REPAIRS

REAR SIDE MEMBER SECTION (G928250)

REMOVAL AND INSTALLATION

REMOVAL

NOTE:

The rear side member may also be changed with the rear side member section.

1. Disconnect the battery ground cable.
   For additional information, refer to: Specifications (414-00, Specifications).

2. Disconnect the generator electrical connector.

3. Remove the heat shield from the spare wheel well.

4.

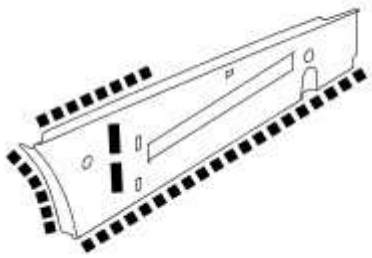

M772232

Prepare the new panel for installation.
For additional information, refer to: Body (501-00, Description and Operation).

INSTALLATION

1. Install the new rear side member section.
   For additional information, refer to: Body (501-00, Description and Operation).

2. Install the heat shield to the spare wheel well.

3. Connect the generator electrical connector.

4. Connect the battery ground cable.
   For additional information, refer to: Specifications (414-00, Specifications).

REAR END SHEET METAL REPAIRS

SPARE WHEEL WELL (G928251)

REMOVAL AND INSTALLATION

REMOVAL

1. Disconnect the battery ground cable.
   For additional information, refer to: Specifications (414-00, Specifications).
2. Disconnect the generator electrical connector.
3. Remove the rear crossmember section.
   For additional information, refer to: Rear Crossmember Section (501-30, Removal and Installation).
4. Remove the heat shield from the spare wheel well.
5.

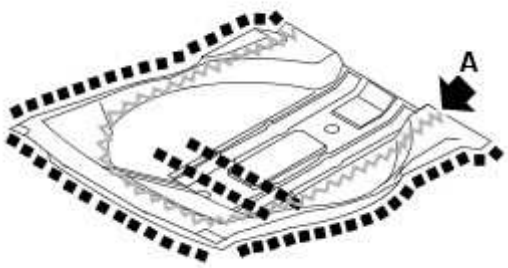

M772203

Prepare the new panel for installation.
For additional information, refer to: Body (501-00, Description and Operation).

INSTALLATION

1. Install the spare wheel well.
   For additional information, refer to: Body (501-00, Description and Operation).
2. Install the heat shield to the spare wheel well.
3. Install the rear crossmember section.
   For additional information, refer to: Rear Crossmember Section (501-30, Removal and Installation).
4. Connect the generator electrical connector.
5. Connect the battery ground cable.
   For additional information, refer to: Specifications (414-00, Specifications).

PAINT – GENERAL INFORMATION

DESCRIPTION AND OPERATION

The following information provides the contact details of where suitable application equipment can be obtained from recommended manufacturers and suppliers.

SUPPLIER	POSTAL ADDRESS	TELEPHONE NUMBER
3M	Automotive Trade Group	(0044) 01344 858611
	3M UK PLC	
	3M House	
	PO Box 1	
	Market Place	
	Bracknell	
	Berkshire	
	RG12 1JU	

SUPPLIER	POSTAL ADDRESS	TELEPHONE NUMBER
Cooper Pegler	Cooper Pegler	(0044) 01444 642526
	Burgess Hill	
	Sussex	
	RH15 9LA	

SUPPLIER	POSTAL ADDRESS	TELEPHONE NUMBER
SATA Spray Equipment	SATA Spray Equipment	(0044) 01284 760791
	Minden Industrial Ltd	
	16 Greyfriars Road	
	Moreton Hall	
	Bury St. Edmunds	
	Suffolk	
	IP32 7DX	

APPLICATION EQUIPMENT

3M Body Schutz Pistol Spray Gun 08996

A pistol type spray gun constructed from case and machined light alloy and designed for use with 3M screw fit Body Schutz containers.

3M Pneumatic Cartridge Gun 08012

Air line fed gun for applying 3M cartridge products. Excellent for ease of application to obtain a smooth bead. Regulator valve for additional control.

3M Pneumatic Applicator Guns 08006 and 08007

Air line fed gun for application of 3M sachet sealers (Part Number 08006 for 200 ml and 310 ml sachet applications, and Part Number 08007 for all size sachets including 600 ml). Also available: Heavy Duty Manual Gun 08013.

3M Applicator Gun 08190

For the application of 3M Structural Adhesive 08120.

3M Inner Cavity Wax Applicator Gun 08997

This equipment accepts 1 liter canisters and has a 750 mm flexible tube. The approved system is available from all 3M refinishing factors.

Cooper Pegler Falcon Junior Pneumatic Gun (Airless)

Intended primarily for applying transit wax, this pneumatic sprayer has a 5 liter container with integral hand pump and provides an effective means of wax spraying without the need for compressed air or additional services. A selection of nozzles, lances, hose lengths and a trigger valve assembly with integral filter allows flexibility in use. Additional applications include general maintenance, wax injection and paint application. Heavy bodied materials may also be applied. All parts are fully replaceable and a wide range of nozzle configurations is available.

SATA Schutz Gun Model UBE

The SATA Schutz Gun is approved for the re-treatment of vehicle underbody areas with protective coatings as supplied in 1 liter, purpose designed 'one-way' containers. The screw thread fitting (female on the applicator gun) is standard to most Schutz type packs. Full operating details are supplied with the equipment.

SATA HKD1 Wax Injection Equipment

This equipment is approved for carrying out cavity wax re-treatment. The SATA HKD1 set comprises a high quality forged gun with 1 liter pressure feed container, a flexible nylon lance, a straight 1100 mm steel lance and hooked wand lance. A quick-change coupling is provided as a standard fitting to allow lances to be easily interchanged. Each lance has an integral, machined nozzle with specialized spray characteristics to suit the type of box section to be treated.

CAVITY WAX APPLICATION EQUIPMENT AND TECHNIQUES

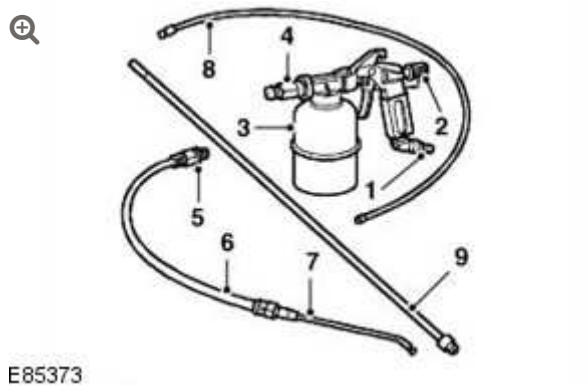

ITEM	DESCRIPTION
1	Air inlet
2	Flow control (spray pattern adjustment)
3	Pressure cup (1 liter capacity). Maximum pressure 9.7 bar (140 psi) 9.84 Kg.cm
4	Gun connector
5	Lance nipple connection
6	Flexible lance
7	Rigid direction hook wand (forward cone spray pattern)
8	Flexible nylon lance (1100 mm) with a 360° spray pattern
9	Rigid lance (1100 mm) with a 360° spray pattern

When re-treating wax injected areas which have been disturbed during repairs, it is necessary to use a compressed air spray gun with integral pressure cup and a selection of interchangeable lances.

The following points must be observed during use, according to the attachments fitted:

- Use the rigid or flexible lance attachments with 360° spray dispersal when treating enclosed areas, to make sure maximum coverage
- Where openings are restricted, use the hook nozzle to provide a more directional spray (e.g. inside narrow or short box sections)
- Spray exposed underbody surfaces directly from the gun less lance attachment and without disconnecting the fluid coupling

1100 MM FLEXIBLE NYLON LANCE

This lance is similar in pattern to the rigid version, but provides the additional penetration required for curved sections or in places where access is difficult. Its main limitation is a lack of positional accuracy inside box sections.

Carry out all spraying on the outward stroke of the lance. Withdraw the lance slowly to make sure sufficient coverage. Do not withdraw the lance too quickly.

Make sure that the nylon tube of the lance is kept away from the edges of the access hole to eliminate abrasion and extend the life of the tube. Take care to make sure that spraying ceases just before the nozzle emerges from the access hole. To assist in this process paint the final 30 mm of the nozzle with RED paint.

HOOK NOZZLE ON FLEXIBLE LANCE

The rigid hook produces a highly atomized, forward-directed, fully conical spray pattern having long range and good dispersion characteristics. This combination has good directional capabilities for treating short, narrow sections, and may also be used for direct spraying of inner wheel arches etc.

In use, position the flat area at the end of the lance at 180° to the nozzle spray direction. This will help to guide the spray more accurately when it is concealed in a box section or access hole.

For general spraying, move the nozzle in an arc from side to side as required, to make sure full coverage.

make sure that all wax injection and application equipment is kept clean. Use white spirit for this purpose immediately after wax injection operations.

BODY AND PAINT MATERIALS

Cavity Waxes

DESCRIPTION	SUPPLIER	PART NUMBER
Inner cavity wax (Amber)	3M	08901/11/21
Inner cavity wax (Transparent)	3M	08909/19/29
Cavity wax	Croda	PW57

Engine Bay Waxes and Lacquers

DESCRIPTION	SUPPLIER	PART NUMBER
Astrolan engine bay wax and cosmetic wax	Astors	DA3243/1
Engine bay and cosmetic wax / lacquer	Croda	PW197
Engine bay cosmetic wax / lacquer	Dinol	4010

Miscellaneous Materials

DESCRIPTION	SUPPLIER	PART NUMBER
Aerosol auto adhesive (Trim) - impact adhesive for trim parts	3M	08080
Flexible parts repair material - rubber modified polypropylene parts	3M	05900
Sound dampening foam	Gurit-Essex	Betacore 7999
Sound dampening pillar foam	Duramix	4330

DESCRIPTION	SUPPLIER	PART NUMBER
Flexible foam (anti-flutter) - used between panels, allows for a degree of movement	Duramix	4320
Water shedder repair (Aerosol)	Teroson	-

Seam Sealers

DESCRIPTION	SUPPLIER	PART NUMBER
Body caulking - type (b) gaps between panels	3M	08568
Drip Chek Clear - bolted, spot welded and bonded panel edges; type (a) and (b) gaps between panels; type (c) clinch joints	3M	08401
Drip Chek Heavy - type (b) gaps between panels; type (c) clinch joints	3M	08531
Polyurethane seam sealer - bolted, spot welded and bonded panel edges; type (a) and (b) gaps between panels; type (b) clinch joints	3M	08684/89/94
Polyurethane sealer (Sachet) - bolted panel edges; type (b) clinch joints	3M	08703/83/88
Polyurethane sealer (Sachet) - bolted panel edges; type (b) clinch joints	3M	08800/23
Super seam sealer - lap joints; type (b) clinch joints	3M	08537
Weld Thru' sealer - between spot welded panels	3M	08626
Betafill clinch and brushable sealer - type (b) clinch joints	Gurit-Essex	10211/15/20
Clinch, Joint and Underbody coating - lap joints	Gurit-Essex	10101/1-707
Leak Chek Clear - between bolted panels; spot welded and bonded panel edges; type (c) clinch joints; type (a) gaps between panels	Kent Industries	10075
Putty - type (b) gaps between panels	Kent Industries	-
	PPG	6500

DESCRIPTION	SUPPLIER	PART NUMBER
Polyurethane seam sealer - bolted, spot welded and bonded panel edges; between bonded panels; type (a) and (b) gaps between panels		
Polyurethane seam sealer - bolted, spot welded and bonded panel edges; between bonded panels; type (b) gaps between panels	Teroson	92
Terolan light seam sealer - bolted, spot welded and bonded panel edges; type (a) and (b) gaps between panels; between bonded panels; type (c) clinch joints	Teroson	-
Terolan special brushable seam sealer - lap joints	Teroson	-
Terostat sprayable seam sealer - bolted, spot welded and bonded panel edges; between bonded panels; type (b) gaps between panels	Teroson	9320
Terostat 1K Polyurethane seam sealer (SE 20) - type (a) and (b) gaps between panels; spot welded and bonded panel edges	Teroson	-
Sealing compound - bolted, spot welded and bonded panel edges; between bonded panels; type (b) gaps between panels	Wurths	8901001/-/6

Structural Adhesives

DESCRIPTION	SUPPLIER	PART NUMBER
Automotive structural adhesive - between bonded panels; type (a) clinch joints	3M	08122
Two part structural epoxy - between bonded and spot welded panels; type (a) clinch joints	Ciba-Geigy	XB5106/7

Underbody Sealers

DESCRIPTION	SUPPLIER	PART NUMBER
Body Schutz	3M	08861
Spray Schutz	3M	08877

DESCRIPTION	SUPPLIER	PART NUMBER
Crodapol brushable underbody sealer	Croda	PV75
Terotex underseal (CP 02)	Teroson	9320

Underbody Waxes

DESCRIPTION	SUPPLIER	PART NUMBER
Stone-chip coating (smooth)	3M	08158/9
Underbody wax	Croda	PW61
Underbody wax	Dinol	Tectacote 205

Weld-Through Primers

DESCRIPTION	SUPPLIER	PART NUMBER
Weld Thru' Coating	3M	05913
Zinc spray	3M	09113
Zinc rich primer	ICI	P-565 634

FULL FRAME AND BODY MOUNTING

SPECIFICATIONS

Torque Specifications

DESCRIPTION	NM	LB-FT
Transmission support crossmember damper	90	66
Transmission support crossmember to chassis bolts	68	50
Transmission support insulator through-bolt	100	74

FULL FRAME AND BODY MOUNTING

TRANSMISSION SUPPORT CROSSMEMBER – V8 5.0L PETROL/V8 S/C 5.0L PETROL (G1225392)

REMOVAL AND INSTALLATION

REMOVAL

NOTE:

Some variation in the illustrations may occur, but the essential information is always correct.

1. Disconnect the battery ground cable.
   For additional information, refer to: Specifications (414-00, Specifications).

2. **WARNING:**

   Do not work on or under a vehicle supported only by a jack. Always support the vehicle on safety stands.

Raise and support the vehicle.

3. Remove the exhaust system.
   For additional information, refer to: Exhaust System (309-00, Removal and Installation).

4. 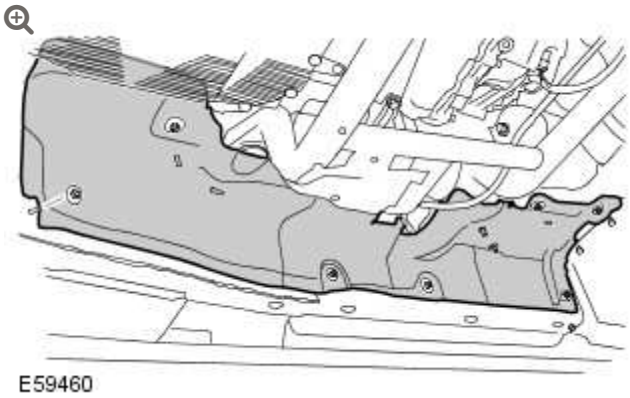
   E59460

   Remove the RH heat shield.

   - Remove the 7 nuts.

5. 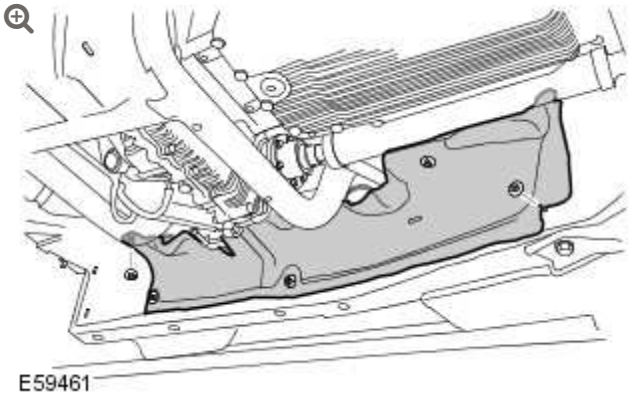
   E59461

   Remove the LH heat shield.

   - Remove the 5 nuts.

6.

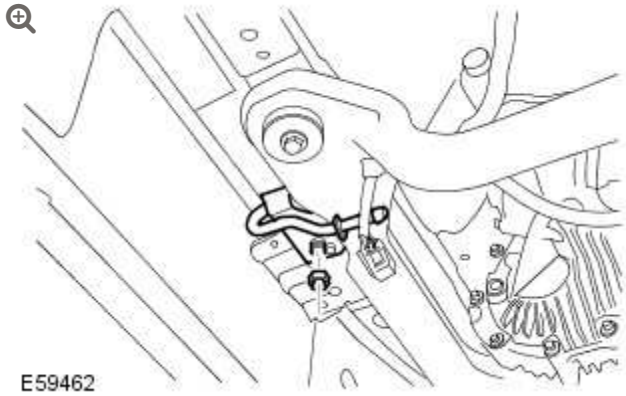

Remove the LH exhaust hanger.

- Remove the nut.

7.

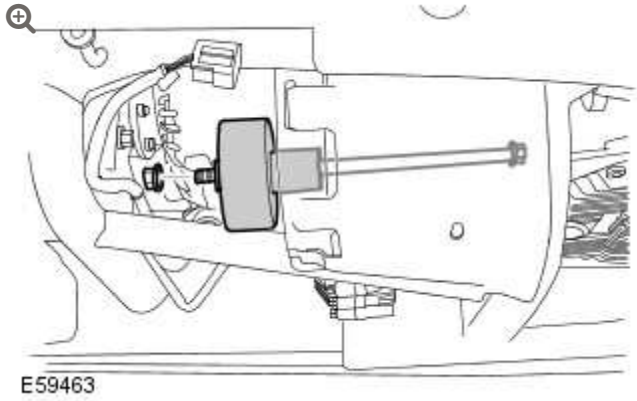

Remove the transmission support insulator nut, bolt and damper.

- Support the transmission.

8.

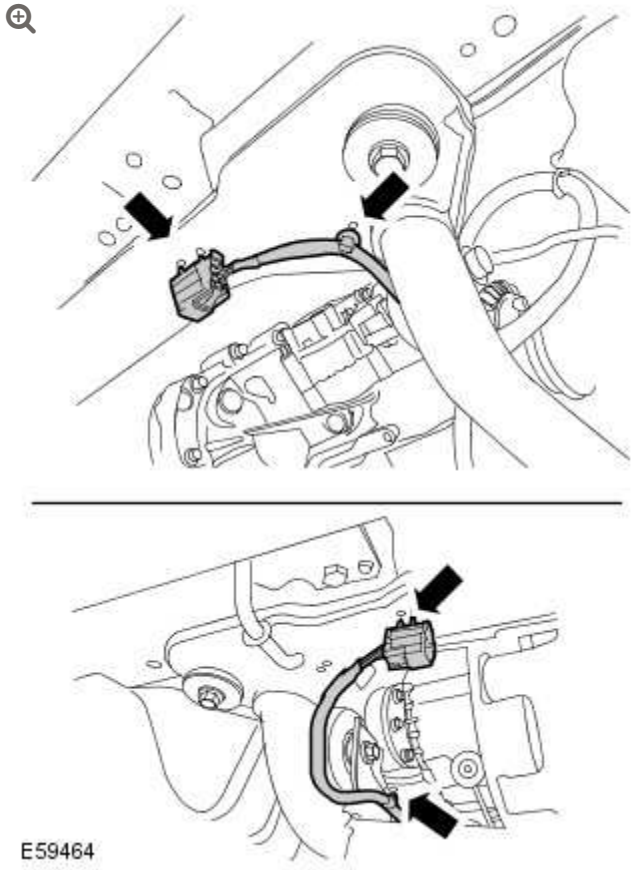

Release the catalyst monitor sensor wiring harness.

- Release the 4 clips.

9.

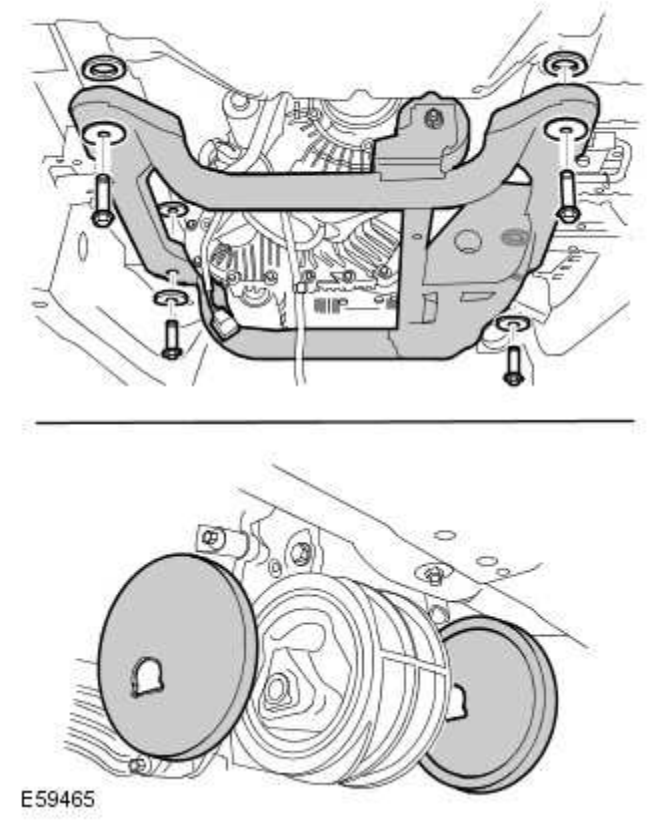

With assistance, remove the transmission support crossmember.

- Remove the 4 bolts and washers.
- Noting fitted position, remove the 4 spacers.
- Noting fitted position, remove the 2 transmission support insulator buffers.

10.

NOTE:

Do not disassemble further if the component is removed for access only.

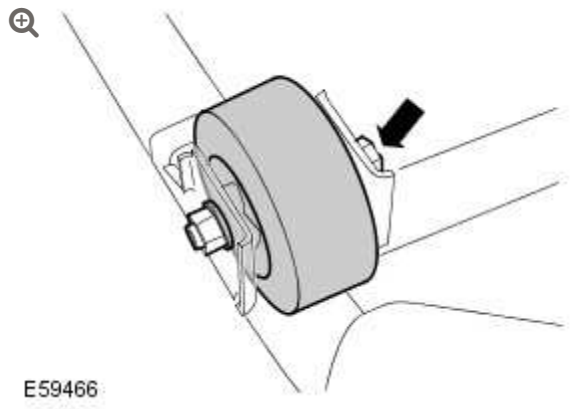

Remove the transmission support crossmember damper.

- Remove the nut and bolt.

INSTALLATION

1. Install the transmission support crossmember damper.
   - Tighten the nut and bolt to 90 Nm (66 lb.ft).
2. With assistance, install the transmission support crossmember.
   - Install the transmission support insulator buffers.
   - Install the spacers.
   - Tighten the bolts to 68 Nm (50 lb.ft).
3. Attach the catalyst monitor sensor wiring harness.
   - Secure the clips.
4. Install the transmission support insulator nut, bolt and damper.
   - Lower the transmission.
   - Tighten the bolt to 115 Nm (85 lb.ft).

5. Install the exhaust hanger.
   - Tighten the nut to 45 Nm (33 lb.ft).

6. Install the heat shields.
   - Tighten the nuts.

7. Install the exhaust system.
   For additional information, refer to: Exhaust System (309-00, Removal and Installation).

8. Connect the battery ground cable.
   For additional information, refer to: Specifications (414-00, Specifications).

Interactive Electrical Wiring Diagrams (iEWD)

© Jaguar Land Rover Limited 2015

While every effort is made to ensure accuracy, design changes to the vehicle may be made in the period between the completion of this publication and the introduction of vehicles. All rights reserved. No part of this publication may be reproduced, stored in a retrieval system or transmitted in any form, electronic, mechanical, recording or other means without prior written permission from Jaguar Land Rover Limited. Paper copies of this document are uncontrolled, always refer to the electronic source material for the latest information.

BEFORE USING THIS PUBLICATION

HEALTH AND SAFETY

Always follow health and safety guidelines, specifically the Electrical Precautions detailed in the Workshop Manual.

Important

The information provided in this publication is for use only by competent, qualified auto-electricians. Good product knowledge is assumed, as well as the ability to access and use recommended test equipment and other reference material provided.

Test equipment and other reference material

The information in this publication should be used in conjunction with the recommended test equipment; refer to Workshop Manual. Other reference material includes: Electrical Revision Documents (ERD), Technical Service Bulletins (TSB) and the Workshop Manual.

Battery disconnection and reconnection

It is imperative that any information relating to battery disconnection and reconnection is followed; refer to the appropriate sections in the Workshop Manual.

Fault diagnosis

Always use the recommended test equipment and test procedures for correct and reliable fault diagnosis; refer to the appropriate sections in the Workshop Manual.

> *NOTE:* Before starting electrical checks on the vehicle, ensure that relevant mechanical functions operate satisfactorily; refer to the appropriate section of the Workshop Manual.

INTERACTIVE WIRING DIAGRAMS (iEWD)

Using The Wiring Diagrams

Introduction

The interactive wiring diagrams (iEWD) combines two separate publications, the Electrical Wiring Diagrams (EWD) and the Electrical Reference Library (ERL). The iEWD is part of the JLR diagnostic toolset, providing a new method for easily linking between the two sets of data and provides quicker:

- Navigation around the diagrams
- Identification of connector location and pinout
- Connector and data search capability

> *Note*: The connector and data search feature is not fully developed and currently only functions for the page being viewed. In the future, a fully developed iEWD will render data that is fully searchable.

Section numbering

The sections in this publication are ordered to match the Global Outline numbering system as found in the current Workshop Manual. The Power and Ground distribution circuits can be found under section 414-01, BATTERY, MOUNTING AND CABLES.

> *Note*: Where circuit diagrams show more than one sub-system, the circuit will be located in the section that carries the first-named sub-system, for example: Starting and Charging will be located under section 303-06 Starting System, since 'Starting' is the first-named sub-system.

Navigating the diagrams

The navigation control tool comprises three buttons: zoom in, zoom out, zoom reset.

An alternative method of navigating is:

- *Pan*

  Left-click and drag

- *Zoom*

  Double left-click (zoom in), Double right-click (zoom out)

To follow a wire path to another sheet from the chosen arrow head:

- Make a note of the letter positioned directly above the arrow head
- Left-click on sheet number directly below the arrow head

On the newly located sheet, find the corresponding arrowhead and letter.

Components

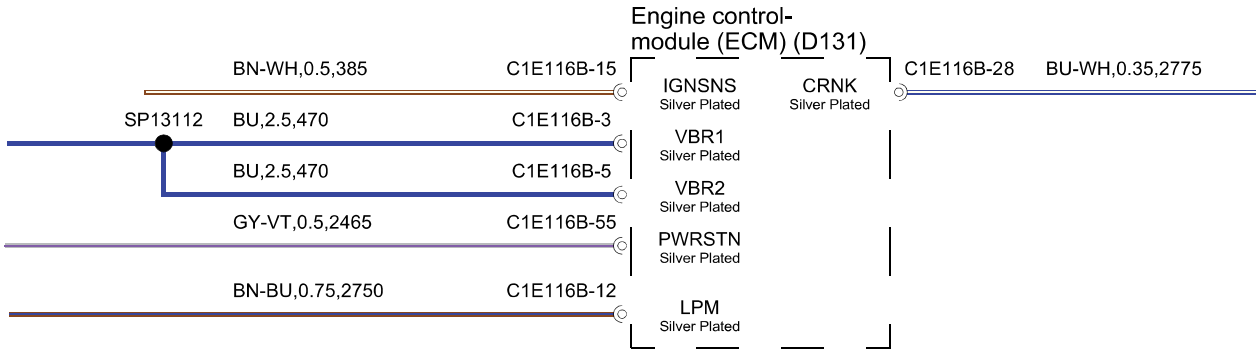

After each component description, a translation code is displayed in brackets, for example: Starter relay (R102), Engine control-module (ECM)(D131). The codes can be ignored.

> *Note*: A dotted outline indicates that the component identified is not shown in its entirety.

Connectors

Connectors and header joints are identified by their corresponding connector number with a numbered suffix to indicate the pin-out detail of the wire, i.e. C1E116B-15 identifies connector 1E116B, pin number 15. Wire insulation colors are listed in a table at the end of this section. Where wires have a predominant color with a secondary color tracer, the main color is identified first, i.e. WH-BK - white with a black tracer.

Wire length

The wire length (in millimetres) is displayed after the color and cross sectional area; for example, BU,2.5,470. In this example, the figure, 470 indicates the approximate position of the harness splice is 470mm from connector C1E116B.

Line Types

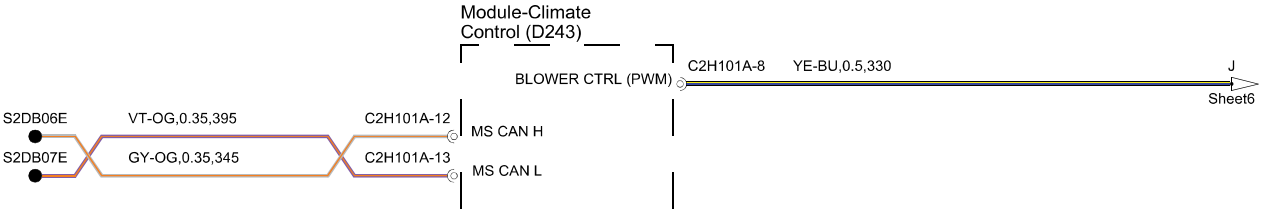

Crossed wires as illustrated above show an example of how a twisted pair of wires may be represented on the circuits.

The arrows illustrated above show an example of the page break symbols, identifying that the circuit continues at the corresponding letter on the sheet number indicated.

Ground points

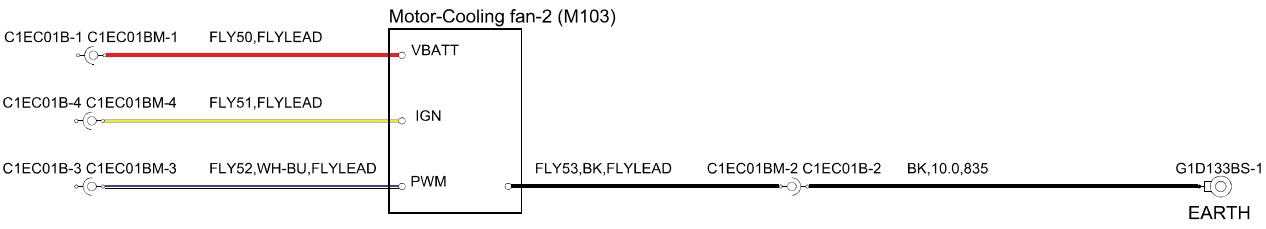

Ground points are identified with an eyelet symbol and a connector number, except where components are grounded

through its fixings, when only the eyelet is shown.

The cup and ball symbol represents the male and female halves of the connector. Most connectors plug directly into a component but some are wired directly to the component using a ‘flylead’ as with C1EC01BM above.

Electrical Reference Library (ERL)

Introduction

The Electrical Reference Library (ERL) data is now accessible directly by following the hyperlinks from the interactive wiring diagrams.

Identification of connector location and pinout



To access connector details, hover the pointer over the connector number on the wiring diagram and left-click; the details will be displayed including, where available, a graphic of the connector face-view and a location image.

The list of Connectors to the right of the location image presents the opportunity to view connector details for each annotated connector shown on that image.

> *Note:*Connectors that are shown in the image are not necessarily part of the same electrical system, but are physically located in the area illustrated.

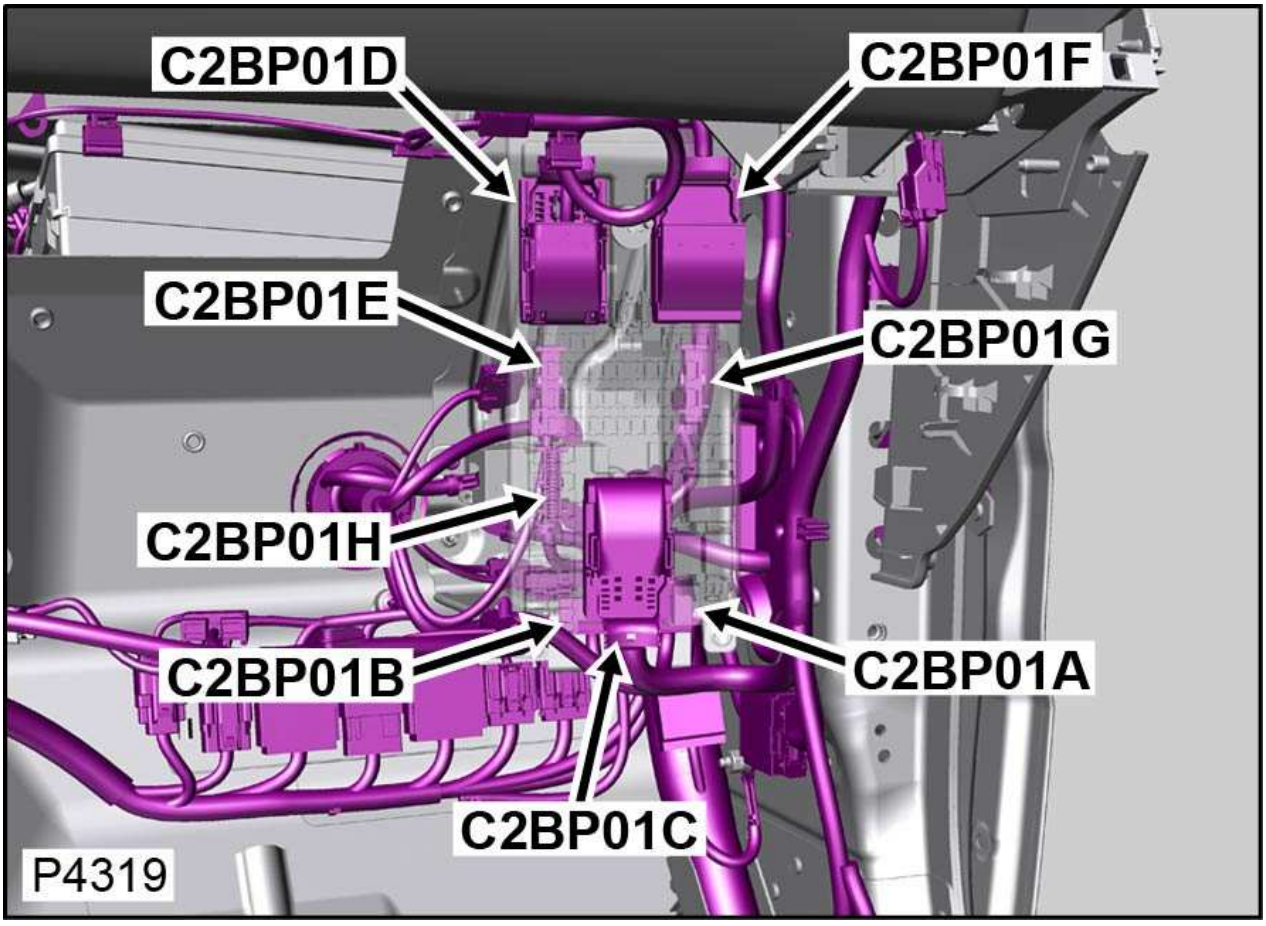

Refer to Connector details for an explanation of how to interpret the rest of the data.

Connector details

Connector details comprises:

- **Connector Designation –** The designated reference, prefixed 'C' or 'G' in the case of some ground connections.
- *CONNECTOR HOUSING SERVICEABLE* – The part identified is available through the normal parts ordering process.
- *CONNECTOR HOUSING NOT SERVICEABLE* – The part identified is not available.
- **Description –** Usually derived from the component to which the connection is made.
- **Location –** Used in conjunction with the photograph to indicate the location of the connector.

  > *Note:* References to the LH or RH side given in this document are made when viewing the vehicle from the rear.

- **Qualifier –** For some connectors it is not possible to represent all possible conditions. An image may show a left-hand condition, the right-hand condition may be similar and is identified as such using a Qualifier, for example: LHD condition illustrated.
- **Location Image –** Shows the location of the subject connector. For convenience, some images identify more than one connector.

  > *Note:* Images do not necessarily represent the optimum method for accessing a connector, always refer to the appropriate Service Repair Operation within the Workshop Manual before attempting to access a connector.

- **Face View –** An outline of the connector housing, viewed from the front, showing pin numbers (if applicable).
- **Part No. –** The part number as it appears on the harness drawing (if applicable).
- **Color –** If applicable, the color of the connector housing is shown. NATURAL is used to describe connectors with a clear/translucent plastic finish.
- **Cavities –** Identifies the number of cavities within the connector.
- **Harness –** Identifies the harness description (English only).
- **Wire Chart (Pin-out table) –** A five column table, giving details of each wire within the connector:

Sample Wire Chart and Service Repair Information

The five columns provides specific wiring information related to each connector.

1. **Cav:** The connector pin (cavity) number.

   > *NOTE:* Wires may not be fitted to all cavities.

2. **CSA:** The cross sectional area of the wire in mm².
3. **Col:** The color of wire populating the connector pin.

4. **Cct:** Identifies the model or option which uses the wire. 'ALL' means applicable to all models in the range fitted with the feature or system in question. In instances where different models, features or systems require different color wires to be fitted in a cavity, each instance of the cavity is included in the pin-out table.
5. **Destn:** The destination of the wire.

The last seven columns provide Service Repair Information where applicable.

> *NOTE:* When the seven columns are not shown, no SRI is available for that particular connector.
>
> If a connector uses more than one type of terminal (pin), different service repair information may be required.

1. **Pre-Terminated Lead:** Pre-terminated leads (including bespoke harnesses where applicable).
2. **Extract Tool:** Connector pin extractor tools.
3. **Crimpers:** Terminal applicator tool.
4. **Wire Stripper:** Wire cutter/stripper.
5. **Heat Shrink Sleeve:** Adhesive-lined heat-shrink sleeving.
6. **Ident Sleeve:** Wire color identification sleeves.
7. **Splice:** Splice connectors.

Wire chart and service repair information

Cav	CSA	Col	Cct	Destn	Pre-Terminated Lead	Extract Tool	Crimpers	Wire Stripper	Heat Shrink Sleeve	Ident Sleeve	Splice
1	2.5	GN-RD	B2CAF	C2BP01F	418-549-11	418-612	418-116A	418-117	418-104	418-112	418-107
2	1.5	GN	B2CAF	C2BP01F	-	-	-	-	-	-	-

Wire chart only

Cav	CSA	Col	Cct	Destn
1	2.5	GN-RD	B2CAF	C2BP01F
2	1.5	GN	B2CAF	C2BP01F

Abbreviations and acronyms

Abbreviation	Description
ABS	Anti-lock braking system
AUTO	Automatic transmission
AVI	Audio video input

Abbreviation	Description
BBUS	Battery backed-up sounder
BJB	Battery junction box
BSM	Blind spot monitoring
CAN	Controller area network
CJB	Central junction box
CVD	Continuously variable damping
D4	Diesel engine - Straight-four
DAB	Digital audio broadcasting
DBJB	Dual-battery junction box
DPF	Diesel particulate filter
DSC	Dynamic stability control
DTC	Diagnostic trouble code
DV6	Diesel engine - V6
DV8	Diesel engine - V8
EJB	Engine junction box
EGR	Exhaust gas recirculation
FFBH	Fuel fired booster heater
GPS	Global positioning system
HID	High intensity discharge
HLD	High level definition
HS CAN	High speed controller area network bus
LF	Low frequency
LH	Left hand
LHD	Left hand drive

Abbreviation	Description
LIN	Local interconnect network
MMM	Navigation system module
MOST	Media orientated system transport
M/S	Manual/sport
MS CAN	Medium speed controller area network bus
NA	Naturally aspirated
NAS	North American specification
PDC	Park distance control
PV6	Petrol engine - V6
PV8	Petrol engine - V8
PV8NA	Naturally aspirated engine - V8
PV8SC	Super charged engine - V8
RF	Radio frequency
RH	Right hand
RHD	Right hand drive
SAI	Secondary air injection
SCL	Steering column locking
SDARS	Satellite digital audio radio service
SRS	Supplemental restraint system
TCM	Transmission control module
TMC	Traffic message channel
TPMS	Tire pressure monitoring system
TV	Television
UK	United Kingdom

Abbreviation	Description
USB	Universal serial bus
VICS	Vehicle information and communication system

Wire color codes

The following list contains wire color codes used on the vehicle harnesses.

Code	Color
BK or B	Black
GN or G	Green
PK or K	Pink
LG	Light green
BN or N	Brown
OG or O	Orange
VT or P	Purple
RD or R	Red
GY or S	Grey (Slate)
T	Transparent
BU or U	Blue
WH or W	White
YE or Y	Yellow

HARNESS REPAIRS

Repair Methods

CAUTION: Do not attempt to repair any part of a wiring harness unless appropriate training has been received. Refer to the Workshop Manual, Section 418-02, Wiring Harnesses, DESCRIPTION AND OPERATION.

FIBRE OPTICS

General

The fibre optic system installed uses Media Oriented Systems Transport (MOST), which is a multimedia network, optimized for automotive applications. Its design allows it to provide a low-overhead and low-cost interface for the simplest of devices, such as microphones and speakers. More intelligent devices can automatically determine the features and functions provided by all other devices on the network and establish sophisticated control mechanisms without distracting the driver.

Under normal installation conditions the system is robust and failures should not occur. However, since the optical fibres convey data using infra-red light, it is vital the passage of light down the fibre is unobstructed. Obstruction of infra-red light can be caused by:

- Contamination of the fibre ends.
- Damage to the fibre ends.
- Bending, kinking or damaging the cable.

NOTE: Fibres damaged by kinking or exposure of the optical core due to abrasion must be replaced.

Handling

Take special care to avoid damage or contamination when handling or working in the vicinity of fibre optic cables and connectors.

NOTE: Damage or contamination includes scratches to the cable ends and pollution caused by dust, dirt, oil or moisture.

CAUTION: When handling fibre optic cables cleanliness is of paramount importance. The fibre ends should not be touched even with clean bare hands as the natural oils deposited from the skin may penetrate the fibre or may cause dirt to adhere to the fibre end.

System malfunctions and unnecessary warranty claims can be minimised by following these guidelines:

- After disconnection of any cables, carefully install appropriate dust caps to protect the mating faces of the connectors from damage or contamination.
- Avoid introducing tight bends (less than 30mm radius) or kinks into the fibre optic cable during service or repair. Tight bends or kinks could impair operation, cause immediate system failure, or future system failure.
- Avoid excessive force, strain or stress on the fibres and connectors, especially permanent stress after reinstallation.

BH42-70246-A-A-01-01-Service (L322-11MY-JOB1)

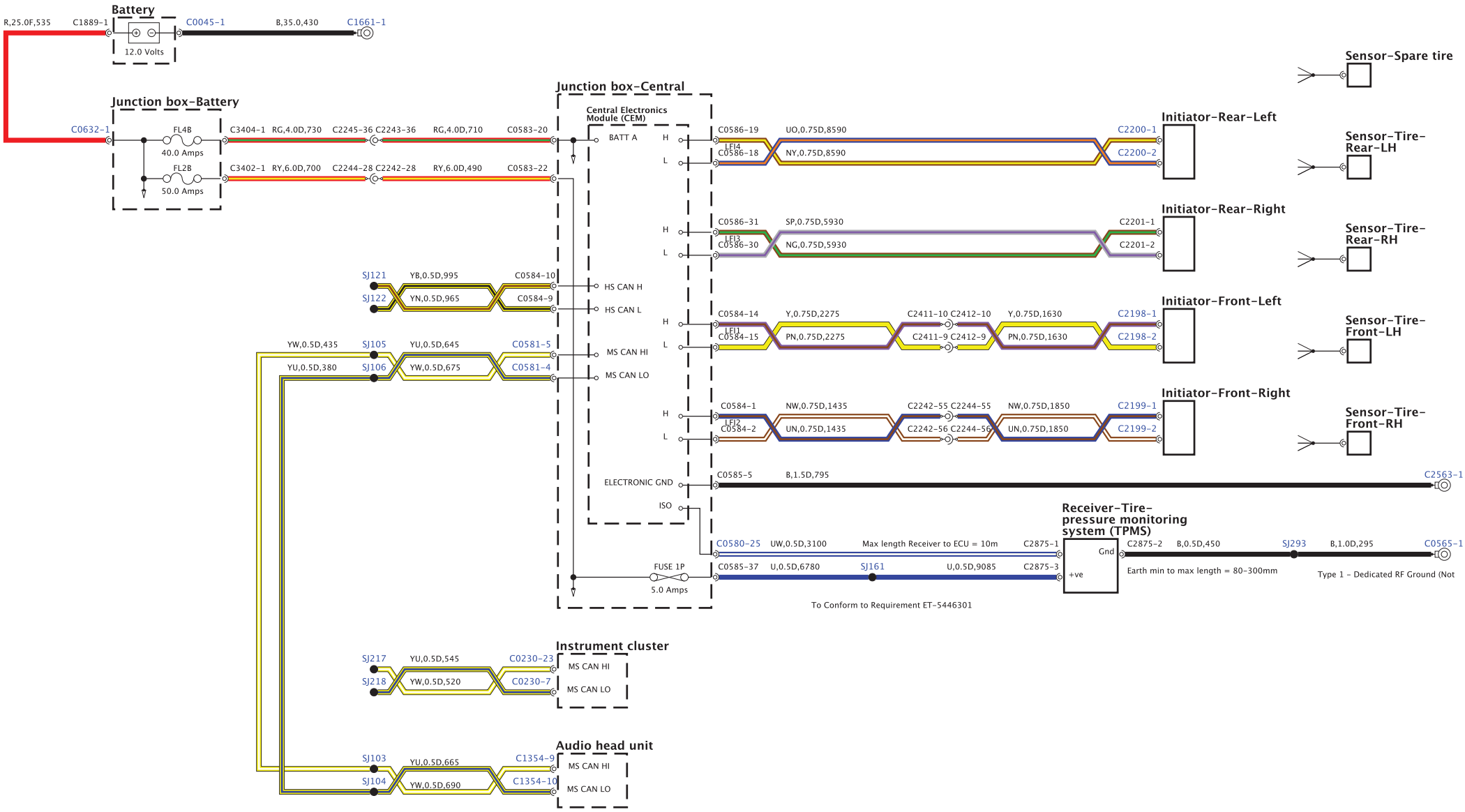

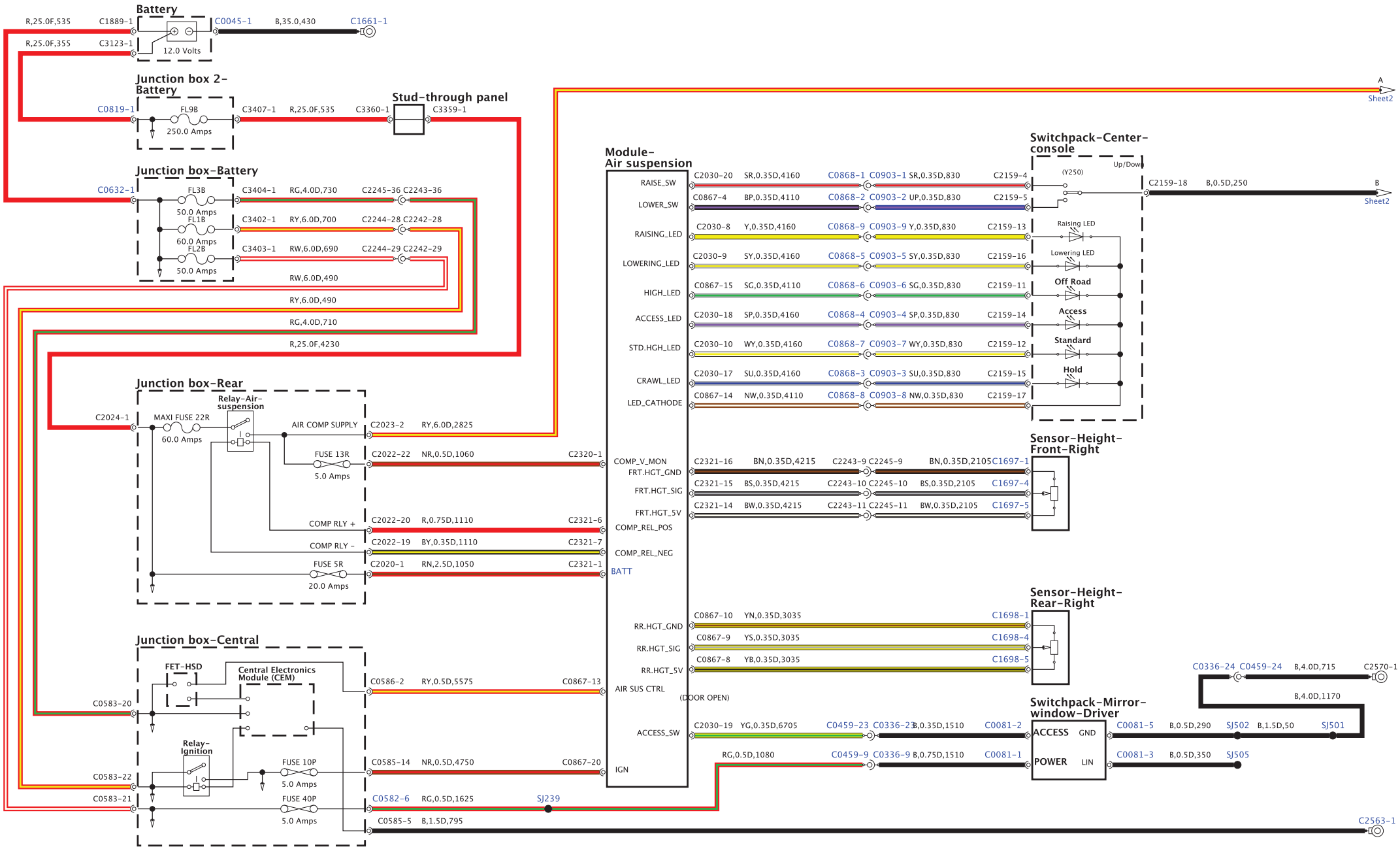
Battery
R,25.0F,535
C1889-1
R,25.0F,355
C3123-1
12.0 Volts
C0045-1
B,35.0,430
C1661-1
Junction box 2-Battery
C0819-1
FL9B
250.0 Amps
C3407-1
R,25.0F,535
C3360-1
Stud-through panel
C3359-1
A
Sheet2
Junction box-Battery
C0632-1
FL3B
50.0 Amps
FL1B
60.0 Amps
FL2B
50.0 Amps
C3404-1
RG,4.0D,730
C2245-36 C2243-36
C3402-1
RY,6.0D,700
C2244-28 C2242-28
C3403-1
RW,6.0D,690
C2244-29 C2242-29
RW,6.0D,490
RY,6.0D,490
RG,4.0D,710
R,25.0F,4230
Module-Air suspension
RAISE_SW
LOWER_SW
RAISING_LED
LOWERING_LED
HIGH_LED
ACCESS_LED
STD.HGH_LED
CRAWL_LED
LED_CATHODE
C2030-20
SR,0.35D,4160
C0868-1 C0903-1
SR,0.35D,830
C2159-4
C0867-4
BP,0.35D,4110
C0868-2 C0903-2
UP,0.35D,830
C2159-5
C2030-8
Y,0.35D,4160
C0868-9 C0903-9
Y,0.35D,830
C2159-13
C2030-9
SY,0.35D,4160
C0868-5 C0903-5
SY,0.35D,830
C2159-16
C0867-15
SG,0.35D,4110
C0868-6 C0903-6
SG,0.35D,830
C2159-11
C2030-18
SP,0.35D,4160
C0868-4 C0903-4
SP,0.35D,830
C2159-14
C2030-10
WY,0.35D,4160
C0868-7 C0903-7
WY,0.35D,830
C2159-12
C2030-17
SU,0.35D,4160
C0868-3 C0903-3
SU,0.35D,830
C2159-15
C0867-14
NW,0.35D,4110
C0868-8 C0903-8
NW,0.35D,830
C2159-17
Switchpack-Center-console
Up/Down
(Y250)
C2159-18
B,0.5D,250
B
Sheet2
Raising LED
Lowering LED
Off Road
Access
Standard
Hold
Junction box-Rear
Relay-Air-suspension
C2024-1
MAXI FUSE 22R
60.0 Amps
AIR COMP SUPPLY
C2023-2
RY,6.0D,2825
FUSE 13R
5.0 Amps
C2022-22
NR,0.5D,1060
C2320-1
COMP RLY +
C2022-20
R,0.75D,1110
C2321-6
COMP RLY -
C2022-19
BY,0.35D,1110
C2321-7
FUSE 5R
20.0 Amps
C2020-1
RN,2.5D,1050
C2321-1
COMP_V_MON
FRT.HGT_GND
FRT.HGT_SIG
FRT.HGT_5V
COMP_REL_POS
COMP_REL_NEG
BATT
C2321-16
BN,0.35D,4215
C2243-9 C2245-9
BN,0.35D,2105
C1697-1
C2321-15
BS,0.35D,4215
C2243-10 C2245-10
BS,0.35D,2105
C1697-4
C2321-14
BW,0.35D,4215
C2243-11 C2245-11
BW,0.35D,2105
C1697-5
Sensor-Height-Front-Right
Sensor-Height-Rear-Right
RR.HGT_GND
RR.HGT_SIG
RR.HGT_5V
C0867-10
YN,0.35D,3035
C1698-1
C0867-9
YS,0.35D,3035
C1698-4
C0867-8
YB,0.35D,3035
C1698-5
Junction box-Central
FET-HSD
Central Electronics Module (CEM)
C0583-20
Relay-Ignition
C0583-22
C0583-21
FUSE 10P
5.0 Amps
FUSE 40P
5.0 Amps
C0586-2
RY,0.5D,5575
C0867-13
C0585-14
NR,0.5D,4750
C0867-20
C0582-6
RG,0.5D,1625
SJ239
C0585-5
B,1.5D,795
AIR SUS CTRL
(DOOR OPEN)
ACCESS_SW
IGN
C2030-19
YG,0.35D,6705
C0459-23 C0336-23
B,0.35D,1510
C0081-2
RG,0.5D,1080
C0459-9 C0336-9
B,0.75D,1510
C0081-1
Switchpack-Mirror-window-Driver
ACCESS
GND
POWER
LIN
C0336-24 C0459-24
B,4.0D,715
C2570-1
B,4.0D,1170
C0081-5
B,0.5D,290
SJ502
B,1.5D,50
SJ501
C0081-3
B,0.5D,350
SJ505
C2563-1

BH42-70180-A-A-02-02-Service (L322-11MY-JOB1)

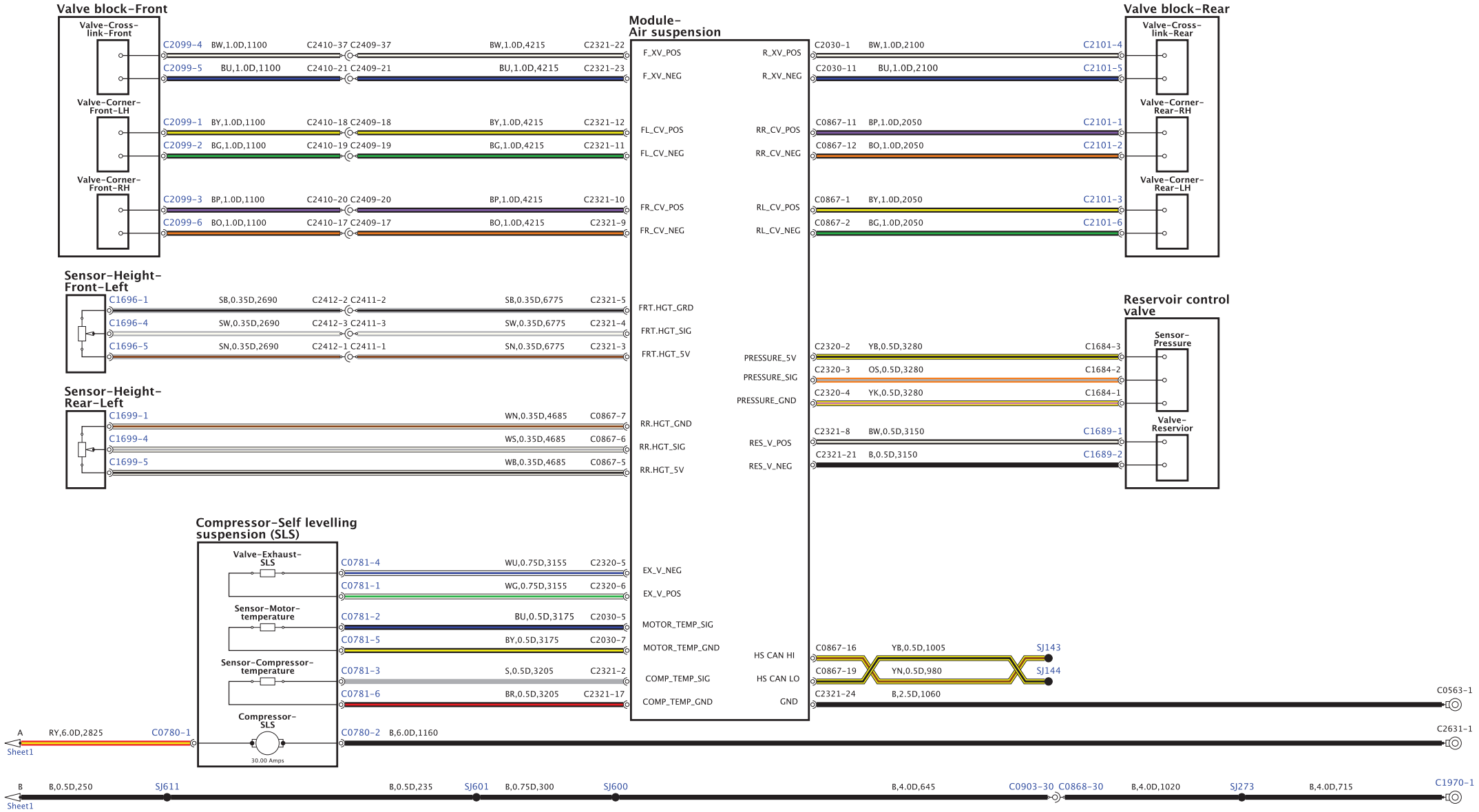

BH42-70201-C-A-01-01-Service (L322-13MY-JOB3)

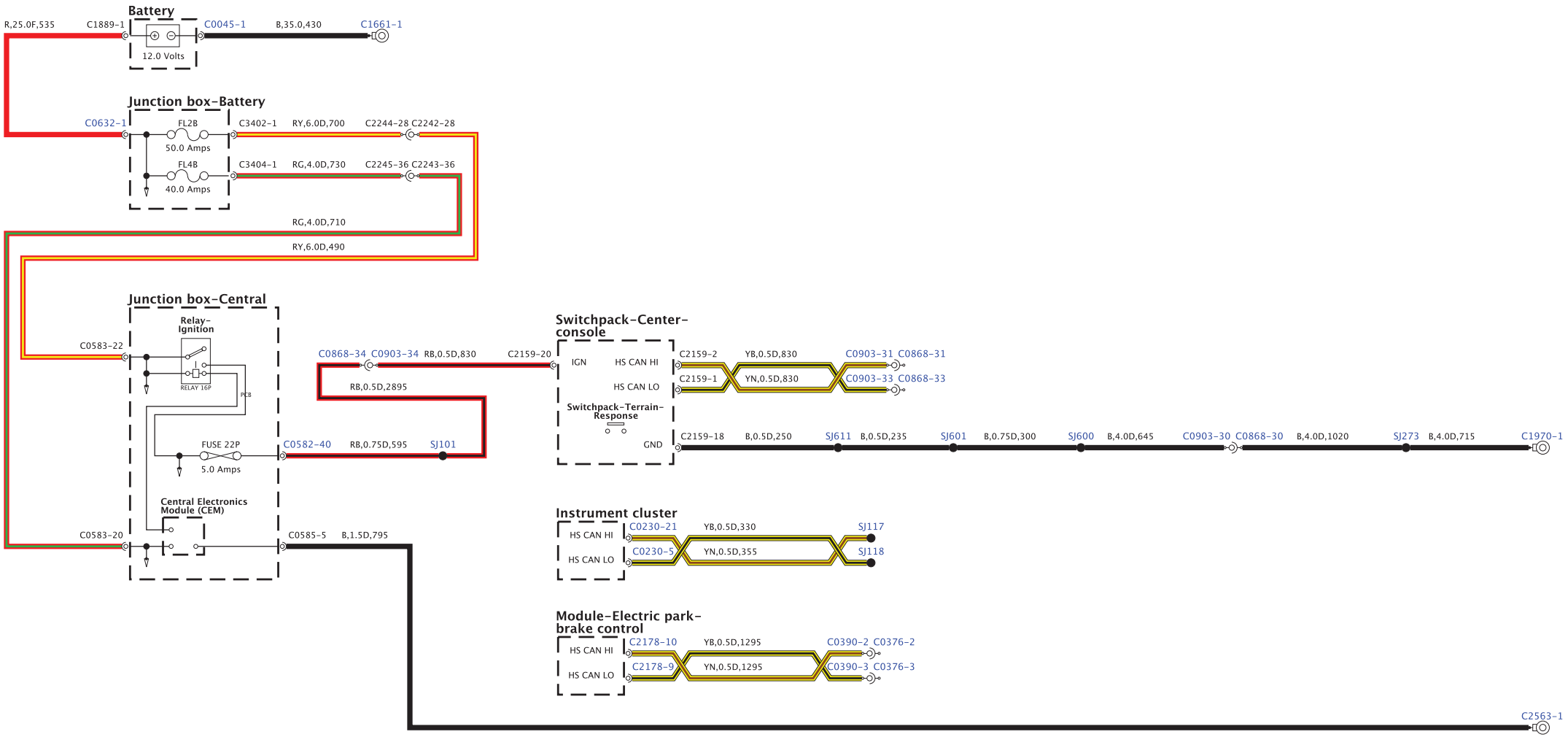

BH42-70046-B-A-01-02-Service (L322-11MY-JOB1)

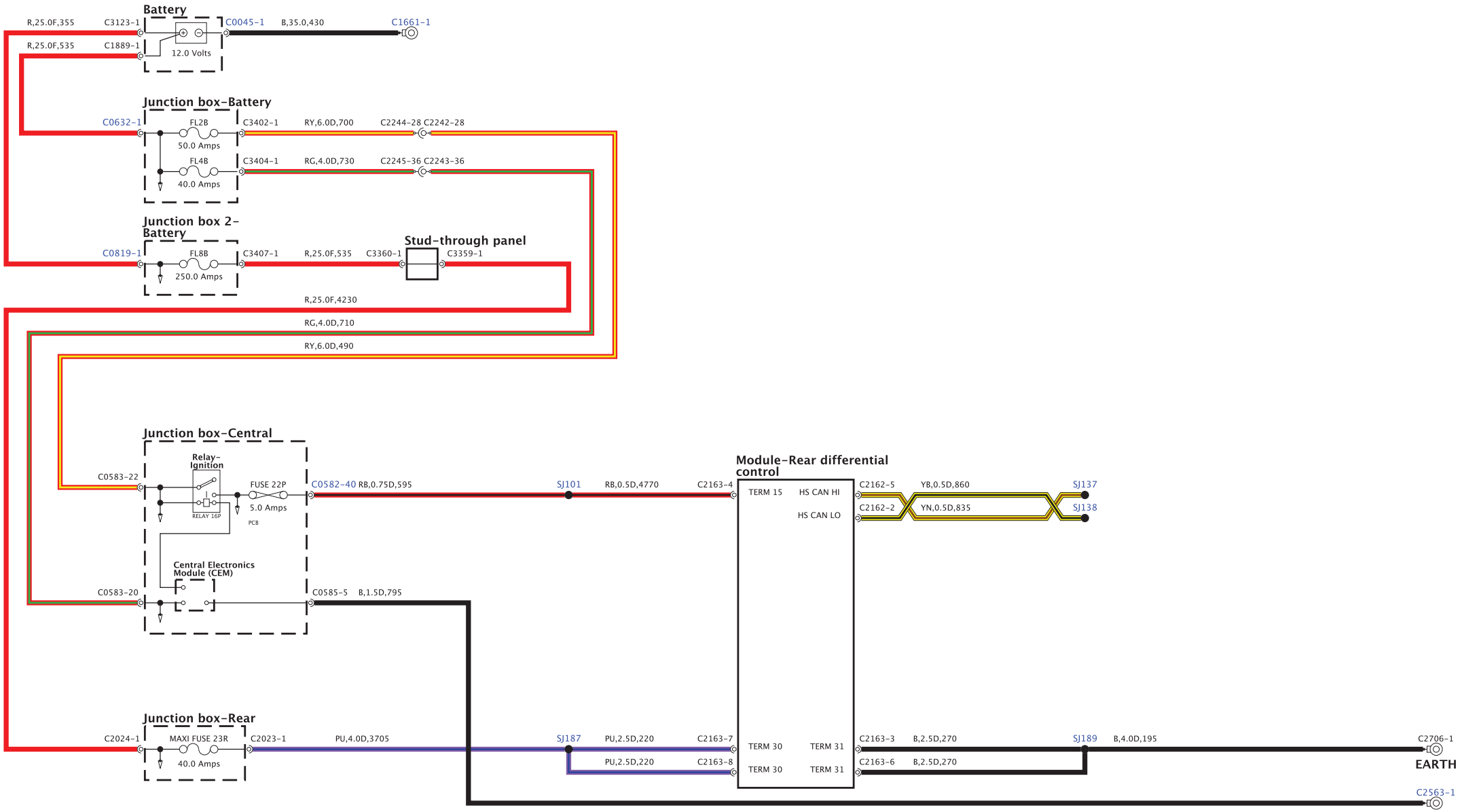

BH42-70046-8-A-02-02-Service (L322-11MY-JO81)

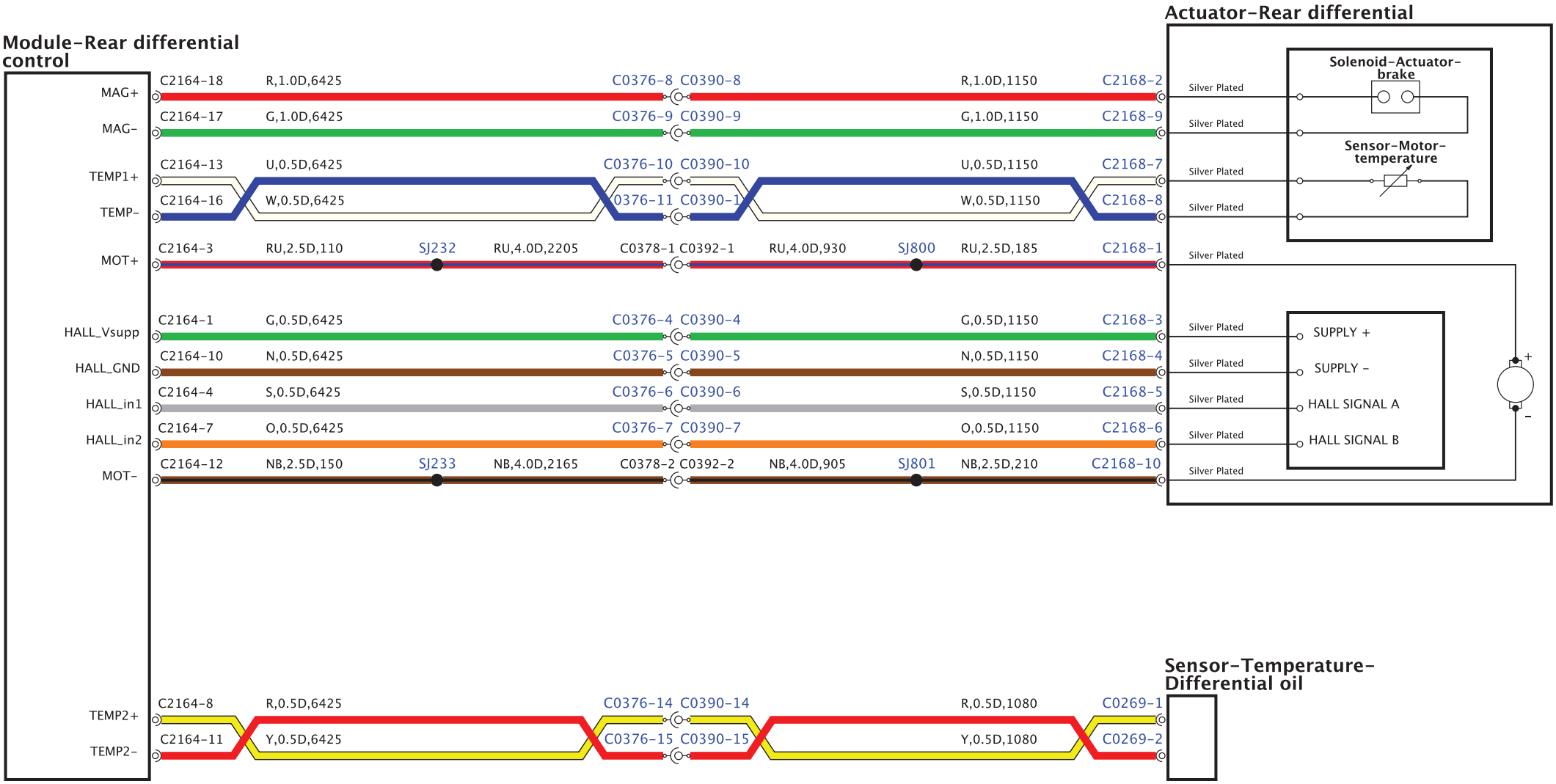

BH42-70167-A-A-01-01-Service (L322-11MY-J081)

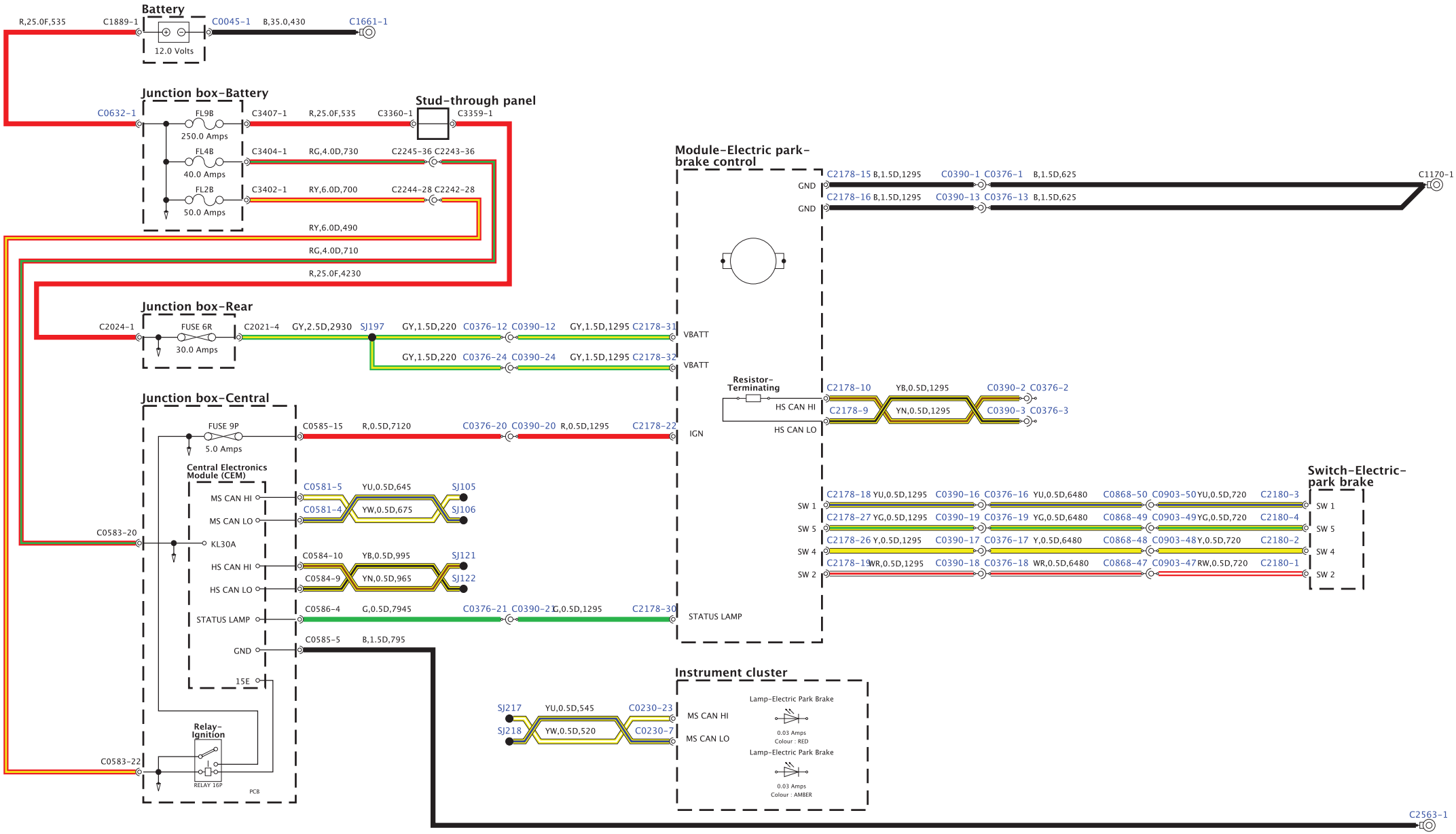

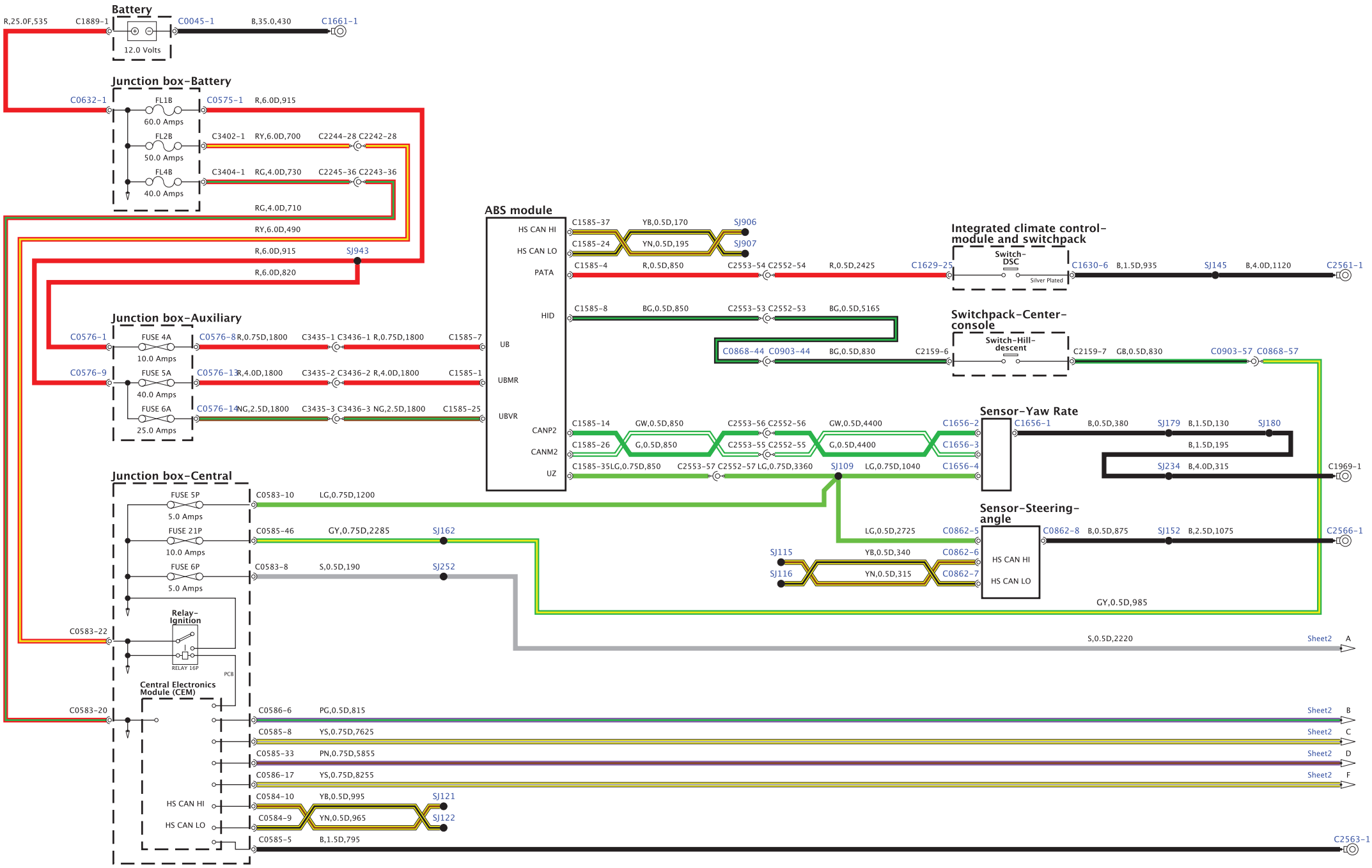
Battery
R,25.0F,535
C1889-1
C0045-1
B,35.0,430
C1661-1
12.0 Volts
Junction box-Battery
C0632-1
FL1B
60.0 Amps
C0575-1
R,6.0D,915
FL2B
50.0 Amps
C3402-1
RY,6.0D,700
C2244-28 C2242-28
FL4B
40.0 Amps
C3404-1
RG,4.0D,730
C2245-36 C2243-36
RG,4.0D,710
RY,6.0D,490
R,6.0D,915
SJ943
R,6.0D,820
Junction box-Auxiliary
C0576-1
FUSE 4A
10.0 Amps
C0576-8
R,0.75D,1800
C3435-1 C3436-1 R,0.75D,1800
C1585-7
C0576-9
FUSE 5A
40.0 Amps
C0576-13
R,4.0D,1800
C3435-2 C3436-2 R,4.0D,1800
C1585-1
FUSE 6A
25.0 Amps
C0576-14
NG,2.5D,1800
C3435-3 C3436-3 NG,2.5D,1800
C1585-25
ABS module
HS CAN HI
HS CAN LO
PATA
HID
UB
UBMR
UBVR
CANP2
CANM2
UZ
C1585-37
YB,0.5D,170
SJ906
C1585-24
YN,0.5D,195
SJ907
C1585-4
R,0.5D,850
C2553-54 C2552-54
R,0.5D,2425
C1629-25
C1585-8
BG,0.5D,850
C2553-53 C2552-53
BG,0.5D,5165
C0868-44 C0903-44
BG,0.5D,830
C2159-6
C1585-14
GW,0.5D,850
C2553-56 C2552-56
GW,0.5D,4400
C1656-2
C1585-26
G,0.5D,850
C2553-55 C2552-55
G,0.5D,4400
C1656-3
C1585-35
LG,0.75D,850
C2553-57 C2552-57
LG,0.75D,3360
SJ109
LG,0.75D,1040
C1656-4
Integrated climate control-module and switchpack
Switch-DSC
Silver Plated
C1630-6
B,1.5D,935
SJ145
B,4.0D,1120
C2561-1
Switchpack-Center-console
Switch-Hill-descent
C2159-7
GB,0.5D,830
C0903-57 C0868-57
Sensor-Yaw Rate
C1656-1
B,0.5D,380
SJ179
B,1.5D,130
SJ180
B,1.5D,195
SJ234
B,4.0D,315
C1969-1
Junction box-Central
FUSE 5P
5.0 Amps
C0583-10
LG,0.75D,1200
FUSE 21P
10.0 Amps
C0585-46
GY,0.75D,2285
SJ162
FUSE 6P
5.0 Amps
C0583-8
S,0.5D,190
SJ252
Relay-Ignition
RELAY 16P
C0583-22
PCB
Central Electronics Module (CEM)
C0583-20
Sensor-Steering-angle
LG,0.5D,2725
C0862-5
C0862-8
B,0.5D,875
SJ152
B,2.5D,1075
C2566-1
SJ115
YB,0.5D,340
C0862-6
SJ116
YN,0.5D,315
C0862-7
HS CAN HI
HS CAN LO
GY,0.5D,985
S,0.5D,2220
Sheet2 A
C0586-6
PG,0.5D,815
Sheet2 B
C0585-8
YS,0.75D,7625
Sheet2 C
C0585-33
PN,0.75D,5855
Sheet2 D
C0586-17
YS,0.75D,8255
Sheet2 F
HS CAN HI
C0584-10
YB,0.5D,995
SJ121
HS CAN LO
C0584-9
YN,0.5D,965
SJ122
C0585-5
B,1.5D,795
C2563-1

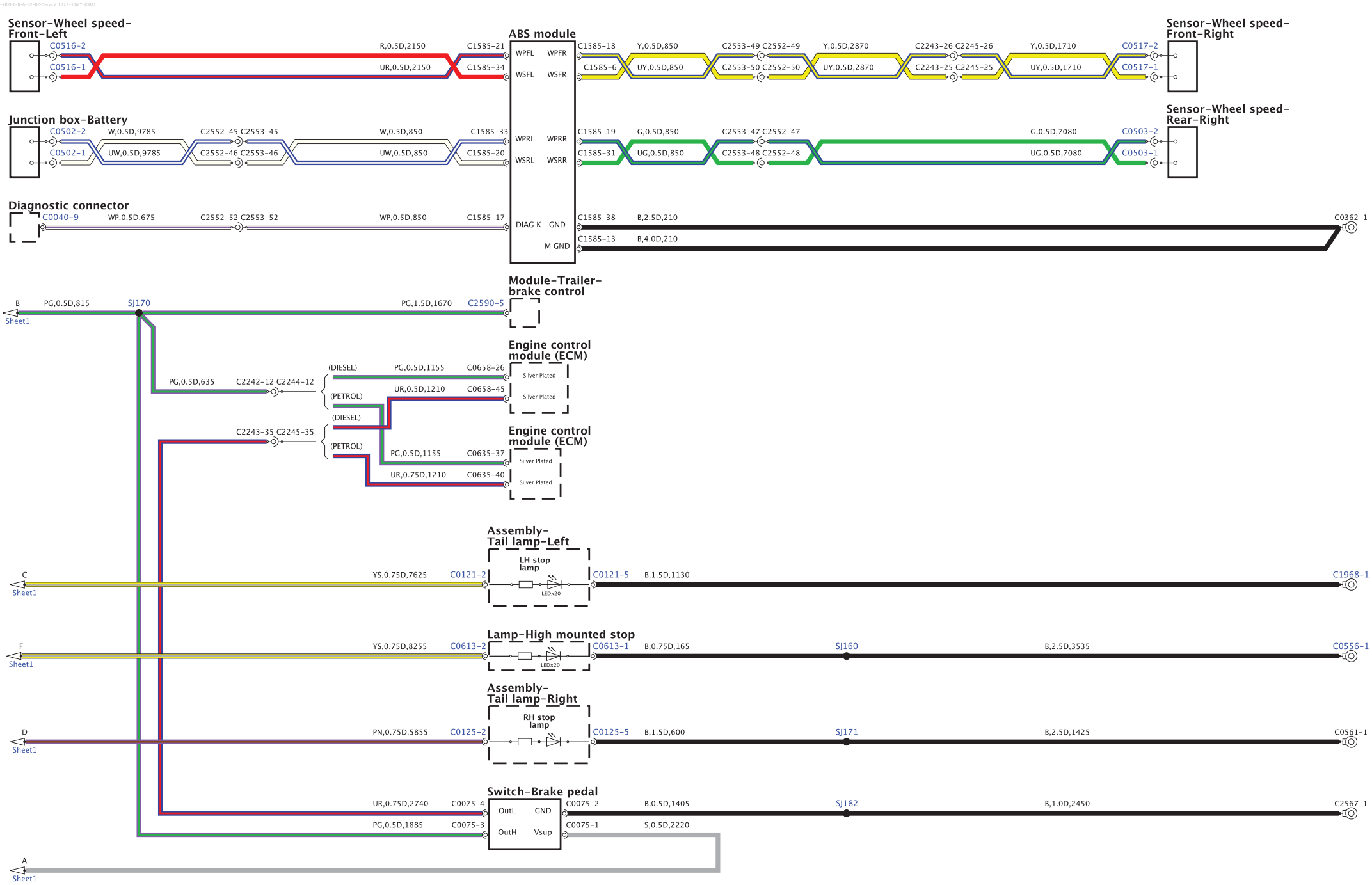
Sensor-Wheel speed-Front-Left
C0516-2
C0516-1
R,0.5D,2150
UR,0.5D,2150
C1585-21
C1585-34
ABS module
WPFL
WSFL
WPFR
WSFR
C1585-18
C1585-6
Y,0.5D,850
UY,0.5D,850
C2553-49 C2552-49
C2553-50 C2552-50
Y,0.5D,2870
UY,0.5D,2870
C2243-26 C2245-26
C2243-25 C2245-25
Y,0.5D,1710
UY,0.5D,1710
C0517-2
C0517-1
Sensor-Wheel speed-Front-Right
Junction box-Battery
C0502-2
C0502-1
W,0.5D,9785
UW,0.5D,9785
C2552-45 C2553-45
C2552-46 C2553-46
W,0.5D,850
UW,0.5D,850
C1585-33
C1585-20
WPRL
WSRL
WPRR
WSRR
C1585-19
C1585-31
G,0.5D,850
UG,0.5D,850
C2553-47 C2552-47
C2553-48 C2552-48
G,0.5D,7080
UG,0.5D,7080
C0503-2
C0503-1
Sensor-Wheel speed-Rear-Right
Diagnostic connector
C0040-9
WP,0.5D,675
C2552-52 C2553-52
WP,0.5D,850
C1585-17
DIAG K
GND
M GND
C1585-38
C1585-13
B,2.5D,210
B,4.0D,210
C0362-1
Module-Trailer-brake control
B
Sheet1
PG,0.5D,815
SJ170
PG,1.5D,1670
C2590-5
Engine control module (ECM)
PG,0.5D,635
C2242-12 C2244-12
(DIESEL)
(PETROL)
PG,0.5D,1155
C0658-26
UR,0.5D,1210
C0658-45
Silver Plated
Engine control module (ECM)
C2243-35 C2245-35
PG,0.5D,1155
C0635-37
UR,0.75D,1210
C0635-40
Assembly-Tail lamp-Left
LH stop lamp
LEDx20
C
YS,0.75D,7625
C0121-2
C0121-5
B,1.5D,1130
C1968-1
Lamp-High mounted stop
F
YS,0.75D,8255
C0613-2
C0613-1
B,0.75D,165
SJ160
B,2.5D,3535
C0556-1
Assembly-Tail lamp-Right
RH stop lamp
D
PN,0.75D,5855
C0125-2
C0125-5
B,1.5D,600
SJ171
B,2.5D,1425
C0561-1
Switch-Brake pedal
UR,0.75D,2740
C0075-4
PG,0.5D,1885
C0075-3
OutL
GND
OutH
Vsup
C0075-2
C0075-1
B,0.5D,1405
S,0.5D,2220
SJ182
B,1.0D,2450
C2567-1
A

BH42-70360-A-A-01-01-Service (L322-11MY-JOB1)

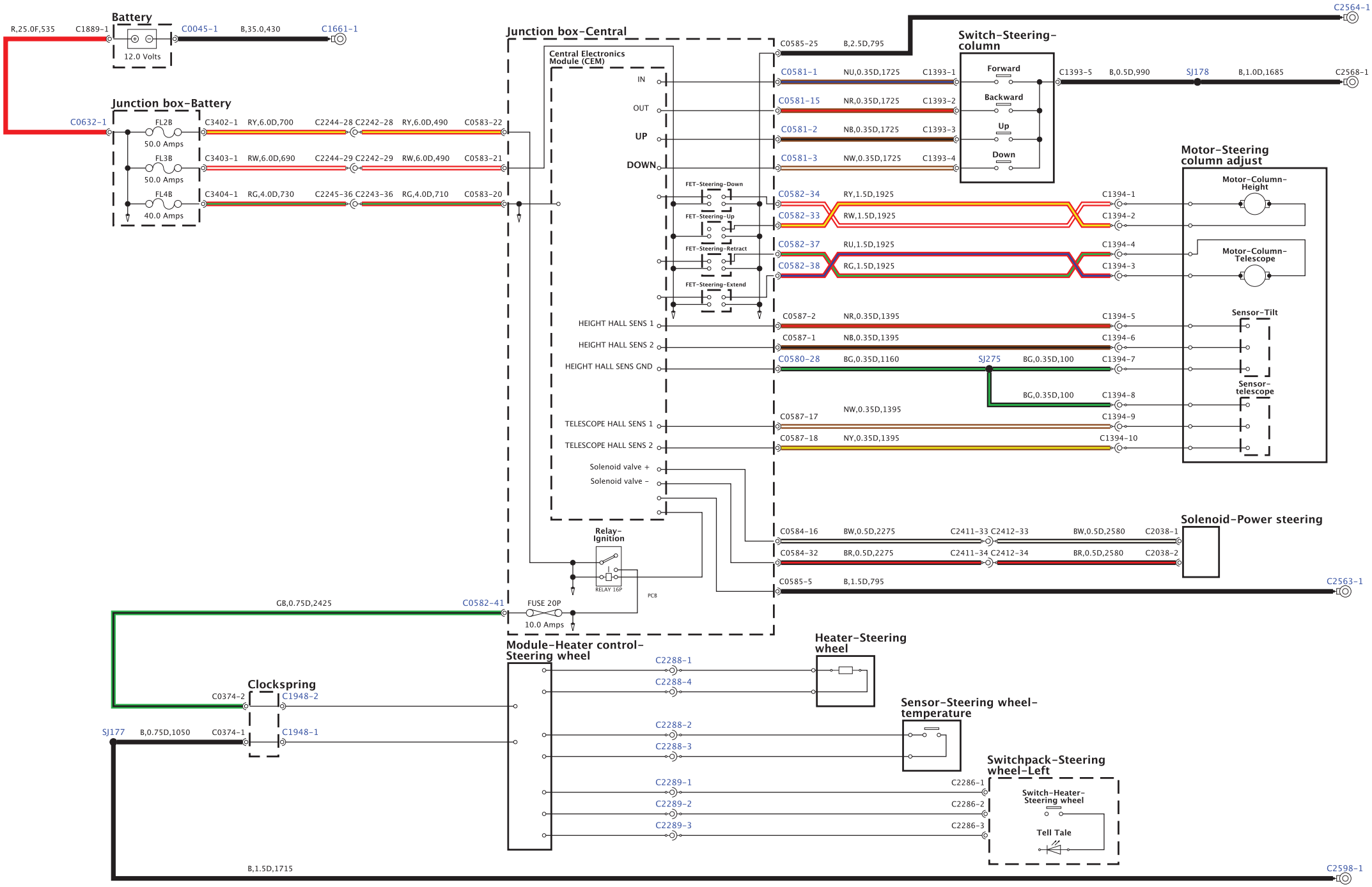

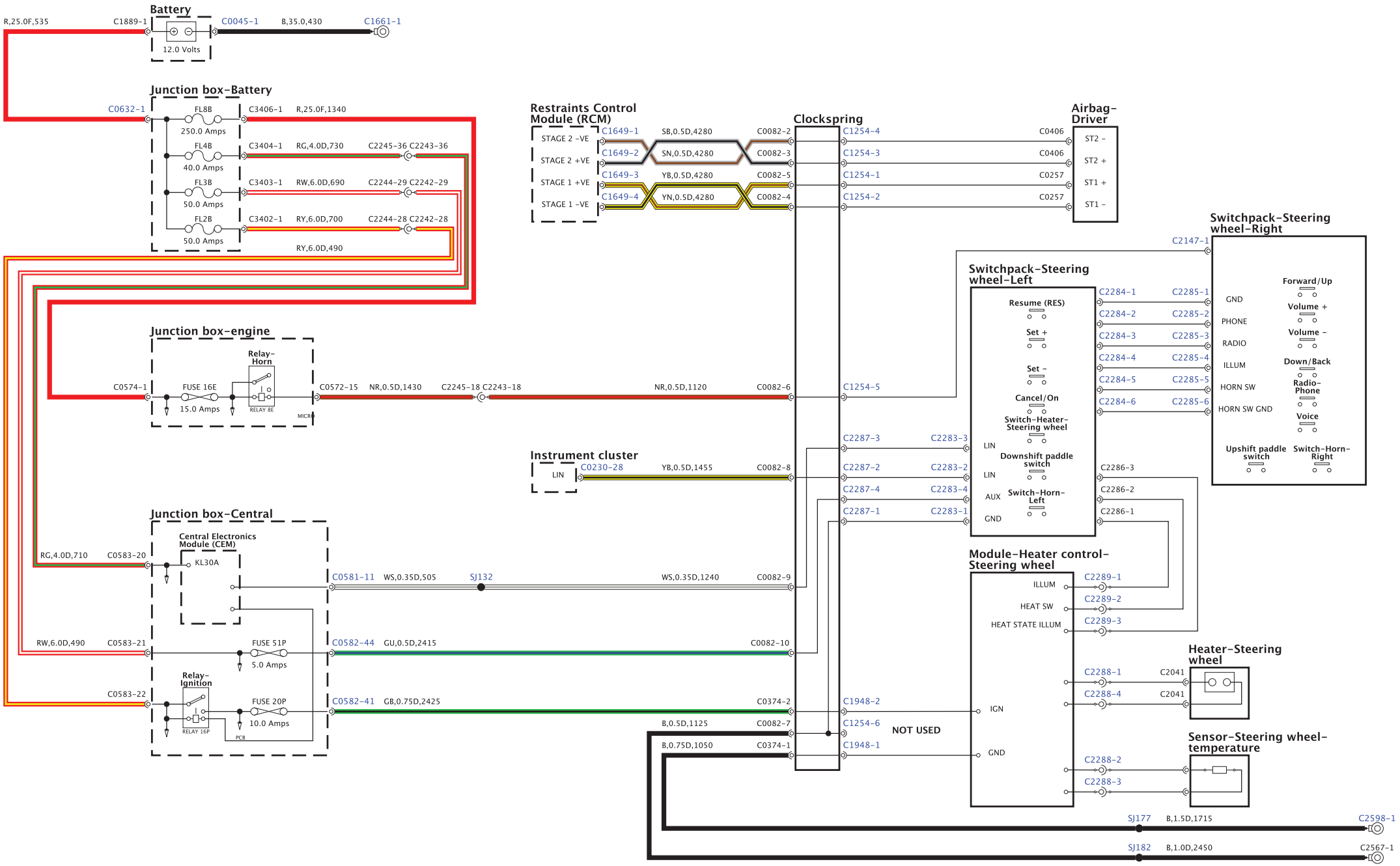
Battery
R,25.0F,535
C1889-1
C0045-1
B,35.0,430
C1661-1
12.0 Volts
Junction box-Battery
C0632-1
FL8B
250.0 Amps
C3406-1
R,25.0F,1340
FL4B
40.0 Amps
C3404-1
RG,4.0D,730
C2245-36 C2243-36
FL3B
50.0 Amps
C3403-1
RW,6.0D,690
C2244-29 C2242-29
FL2B
50.0 Amps
C3402-1
RY,6.0D,700
C2244-28 C2242-28
RY,6.0D,490
Junction box-engine
Relay-Horn
C0574-1
FUSE 16E
15.0 Amps
RELAY 8E
C0572-15
NR,0.5D,1430
C2245-18 C2243-18
NR,0.5D,1120
C0082-6
C1254-5
Junction box-Central
Central Electronics Module (CEM)
RG,4.0D,710
C0583-20
KL30A
C0581-11
WS,0.35D,505
SJ132
WS,0.35D,1240
C0082-9
RW,6.0D,490
C0583-21
FUSE 51P
5.0 Amps
C0582-44
GU,0.5D,2415
C0082-10
Relay-Ignition
C0583-22
FUSE 20P
10.0 Amps
RELAY 16P
PCB
C0582-41
GB,0.75D,2425
C0374-2
C1948-2
B,0.5D,1125
C0082-7
C1254-6
NOT USED
B,0.75D,1050
C0374-1
C1948-1
Restraints Control Module (RCM)
STAGE 2 -VE
STAGE 2 +VE
STAGE 1 +VE
STAGE 1 -VE
C1649-1
C1649-2
C1649-3
C1649-4
SB,0.5D,4280
SN,0.5D,4280
YB,0.5D,4280
YN,0.5D,4280
C0082-2
C0082-3
C0082-5
C0082-4
Clockspring
C1254-4
C1254-3
C1254-1
C1254-2
C0406
C0406
C0257
C0257
Airbag-Driver
ST2 -
ST2 +
ST1 +
ST1 -
Instrument cluster
LIN
C0230-28
YB,0.5D,1455
C0082-8
C2287-3
C2283-3
C2287-2
C2283-2
C2287-4
C2283-4
C2287-1
C2283-1
Switchpack-Steering wheel-Left
Resume (RES)
Set +
Set -
Cancel/On
Switch-Heater-Steering wheel
LIN
Downshift paddle switch
LIN
AUX
Switch-Horn-Left
GND
C2284-1
C2285-1
C2284-2
C2285-2
C2284-3
C2285-3
C2284-4
C2285-4
C2284-5
C2285-5
C2284-6
C2285-6
C2286-3
C2286-2
C2286-1
Switchpack-Steering wheel-Right
C2147-1
GND
PHONE
RADIO
ILLUM
HORN SW
HORN SW GND
Forward/Up
Volume +
Volume -
Down/Back
Radio-Phone
Voice
Upshift paddle switch
Switch-Horn-Right
Module-Heater control-Steering wheel
ILLUM
HEAT SW
HEAT STATE ILLUM
IGN
GND
C2289-1
C2289-2
C2289-3
Heater-Steering wheel
C2288-1
C2041
C2288-4
C2041
Sensor-Steering wheel-temperature
C2288-2
C2288-3
SJ177
B,1.5D,1715
C2598-1
SJ182
B,1.0D,2450
C2567-1

BH42-70032-B-A-01-05-Service (L322-11MY-JO81)

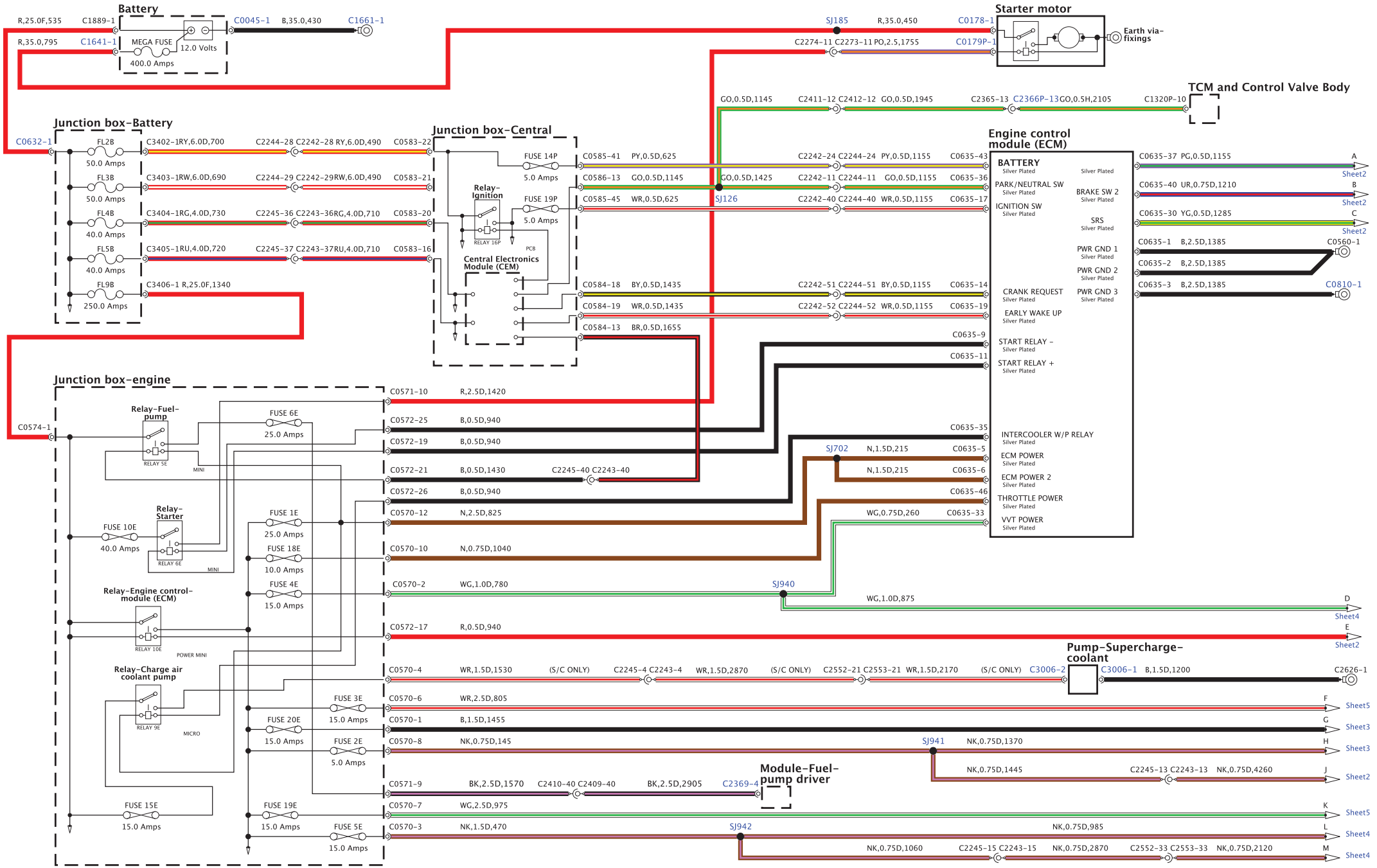

BH62-70032-B-A-02-05-Service (L322-11MY-JO81)

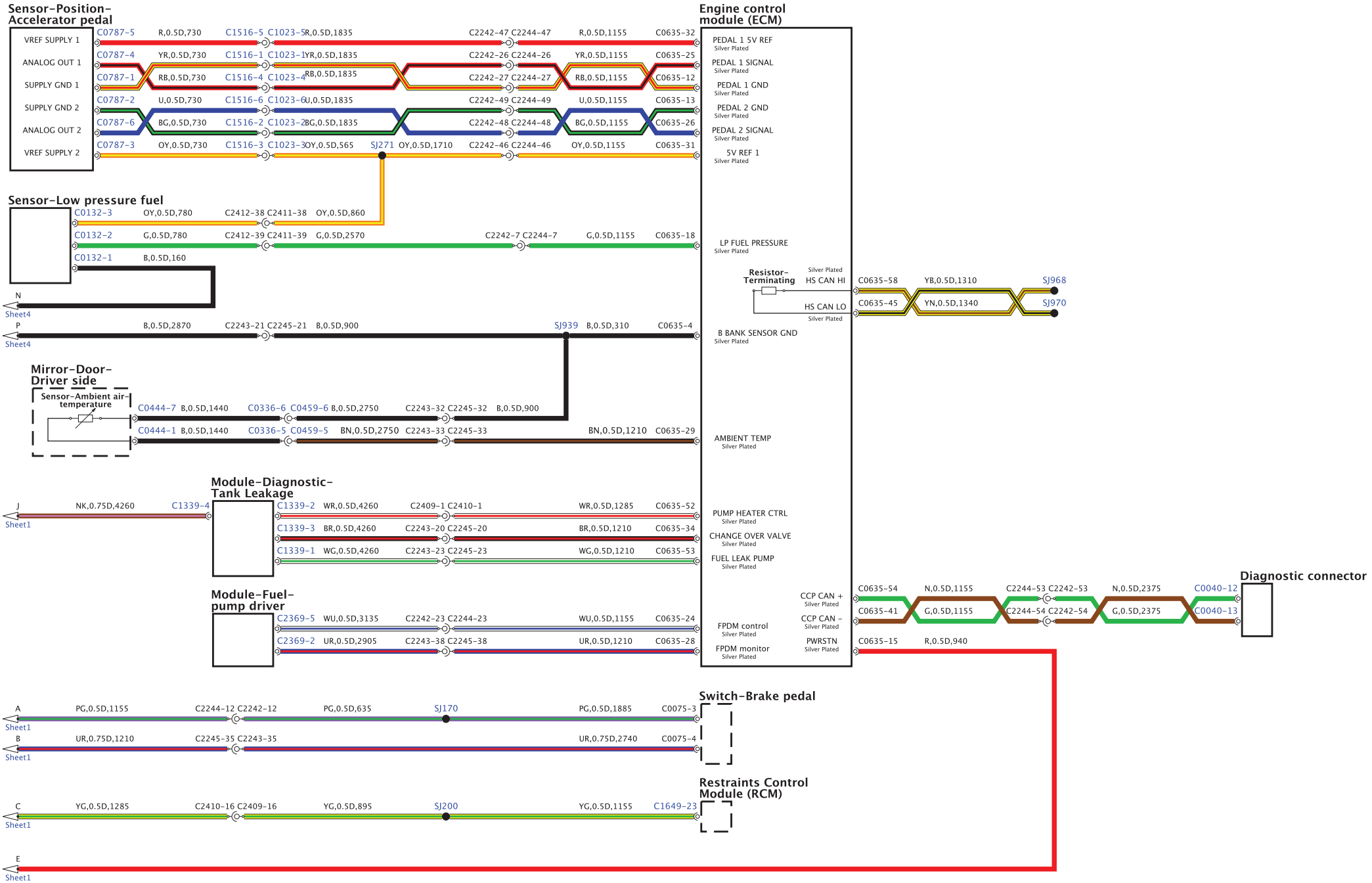

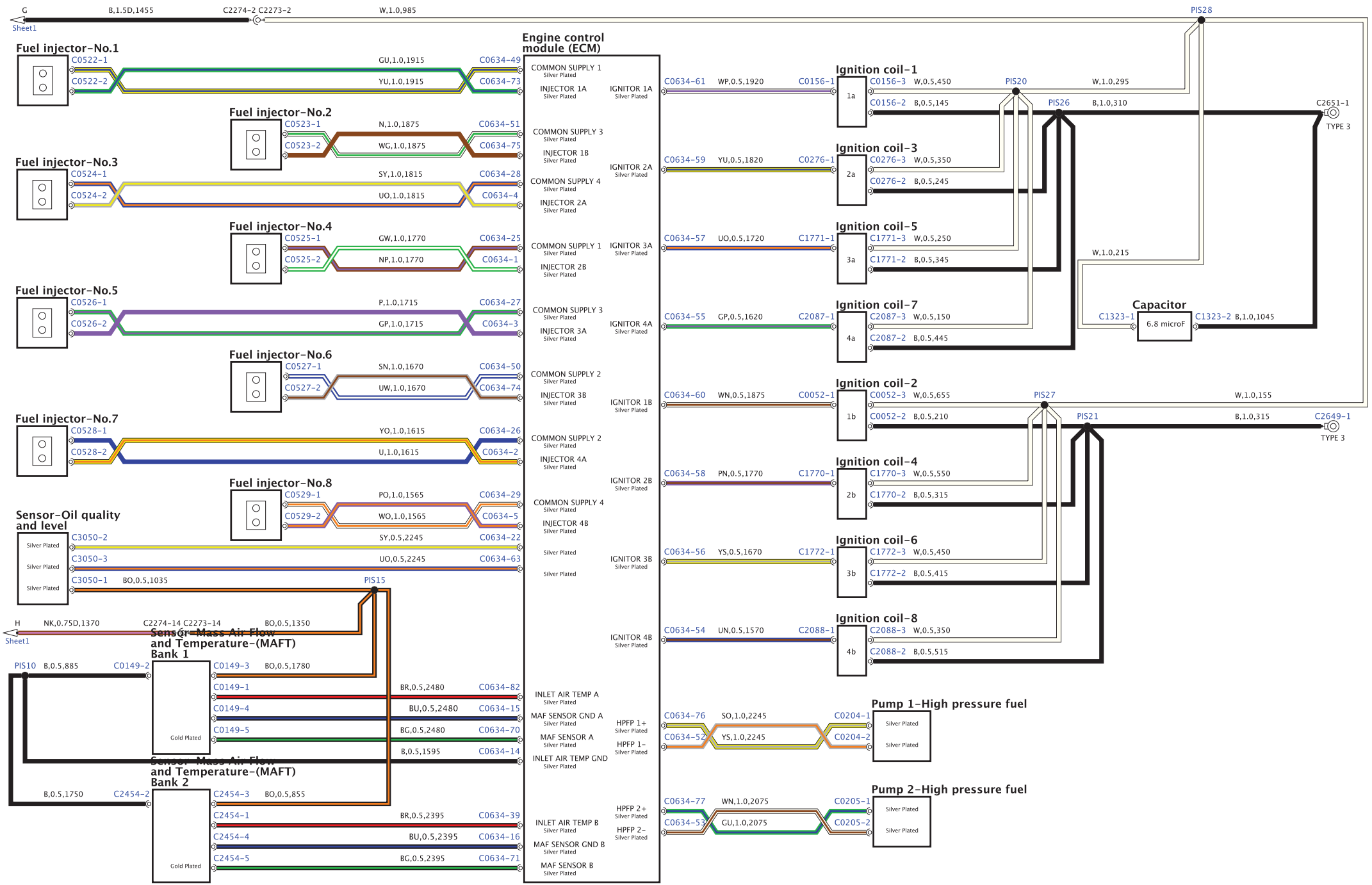
G
B,1.5D,1455
C2274-2 C2273-2
W,1.0,985
Sheet1
PIS28
Engine control module (ECM)
Fuel injector-No.1
C0522-1
C0522-2
GU,1.0,1915
YU,1.0,1915
C0634-49
C0634-73
Fuel injector-No.2
C0523-1
C0523-2
N,1.0,1875
WG,1.0,1875
C0634-51
C0634-75
Fuel injector-No.3
C0524-1
C0524-2
SY,1.0,1815
UO,1.0,1815
C0634-28
C0634-4
Fuel injector-No.4
C0525-1
C0525-2
GW,1.0,1770
NP,1.0,1770
C0634-25
C0634-1
Fuel injector-No.5
C0526-1
C0526-2
P,1.0,1715
GP,1.0,1715
C0634-27
C0634-3
Fuel injector-No.6
C0527-1
C0527-2
SN,1.0,1670
UW,1.0,1670
C0634-50
C0634-74
Fuel injector-No.7
C0528-1
C0528-2
YO,1.0,1615
U,1.0,1615
C0634-26
C0634-2
Fuel injector-No.8
C0529-1
C0529-2
PO,1.0,1565
WO,1.0,1565
C0634-29
C0634-5
Sensor-Oil quality and level
C3050-2
C3050-3
C3050-1
SY,0.5,2245
UO,0.5,2245
BO,0.5,1035
C0634-22
C0634-63
PIS15
Silver Plated
H
NK,0.75D,1370
C2274-14 C2273-14
BO,0.5,1350
Sheet1
Sensor-Mass Air Flow and Temperature-(MAFT) Bank 1
PIS10
B,0.5,885
C0149-2
C0149-3
BO,0.5,1780
C0149-1
BR,0.5,2480
C0634-82
C0149-4
BU,0.5,2480
C0634-15
C0149-5
BG,0.5,2480
C0634-70
B,0.5,1595
C0634-14
Gold Plated
Sensor-Mass Air Flow and Temperature-(MAFT) Bank 2
B,0.5,1750
C2454-2
C2454-3
BO,0.5,855
C2454-1
BR,0.5,2395
C0634-39
C2454-4
BU,0.5,2395
C0634-16
C2454-5
BG,0.5,2395
C0634-71
Gold Plated
COMMON SUPPLY 1
INJECTOR 1A
COMMON SUPPLY 3
INJECTOR 1B
COMMON SUPPLY 4
INJECTOR 2A
COMMON SUPPLY 1
INJECTOR 2B
COMMON SUPPLY 3
INJECTOR 3A
COMMON SUPPLY 2
INJECTOR 3B
COMMON SUPPLY 2
INJECTOR 4A
COMMON SUPPLY 4
INJECTOR 4B
INLET AIR TEMP A
MAF SENSOR GND A
MAF SENSOR A
INLET AIR TEMP GND
INLET AIR TEMP B
MAF SENSOR GND B
MAF SENSOR B
IGNITOR 1A
IGNITOR 2A
IGNITOR 3A
IGNITOR 4A
IGNITOR 1B
IGNITOR 2B
IGNITOR 3B
IGNITOR 4B
HPFP 1+
HPFP 1-
HPFP 2+
HPFP 2-
Ignition coil-1
C0634-61
WP,0.5,1920
C0156-1
1a
C0156-3
W,0.5,450
C0156-2
B,0.5,145
Ignition coil-3
C0634-59
YU,0.5,1820
C0276-1
2a
C0276-3
W,0.5,350
C0276-2
B,0.5,245
Ignition coil-5
C0634-57
UO,0.5,1720
C1771-1
3a
C1771-3
W,0.5,250
C1771-2
B,0.5,345
Ignition coil-7
C0634-55
GP,0.5,1620
C2087-1
4a
C2087-3
W,0.5,150
C2087-2
B,0.5,445
Ignition coil-2
C0634-60
WN,0.5,1875
C0052-1
1b
C0052-3
W,0.5,655
C0052-2
B,0.5,210
Ignition coil-4
C0634-58
PN,0.5,1770
C1770-1
2b
C1770-3
W,0.5,550
C1770-2
B,0.5,315
Ignition coil-6
C0634-56
YS,0.5,1670
C1772-1
3b
C1772-3
W,0.5,450
C1772-2
B,0.5,415
Ignition coil-8
C0634-54
UN,0.5,1570
C2088-1
4b
C2088-3
W,0.5,350
C2088-2
B,0.5,515
PIS20
PIS26
W,1.0,295
B,1.0,310
C2651-1
TYPE 3
W,1.0,215
Capacitor
C1323-1
6.8 microF
C1323-2
B,1.0,1045
PIS27
PIS21
W,1.0,155
B,1.0,315
C2649-1
TYPE 3
Pump 1-High pressure fuel
C0634-76
SO,1.0,2245
C0204-1
C0634-52
YS,1.0,2245
C0204-2
Silver Plated
Pump 2-High pressure fuel
C0634-77
WN,1.0,2075
C0205-1
C0634-53
GU,1.0,2075
C0205-2
Silver Plated

BH42-70032-B-A-04-05-Service (L322-11MY-JOB1)

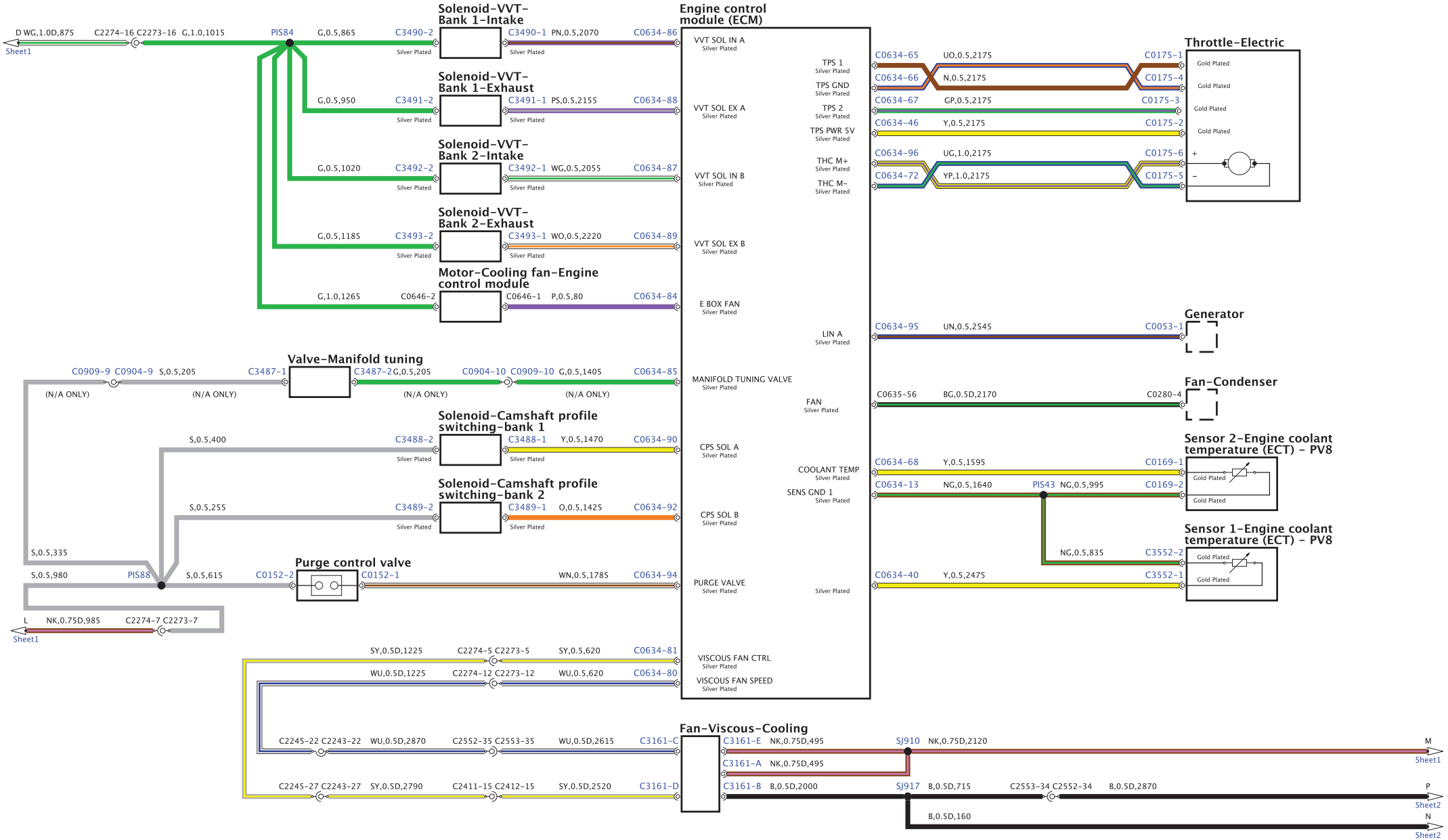

BH42-70032-B-A-05-05-Service (L322-11MY-JO81)

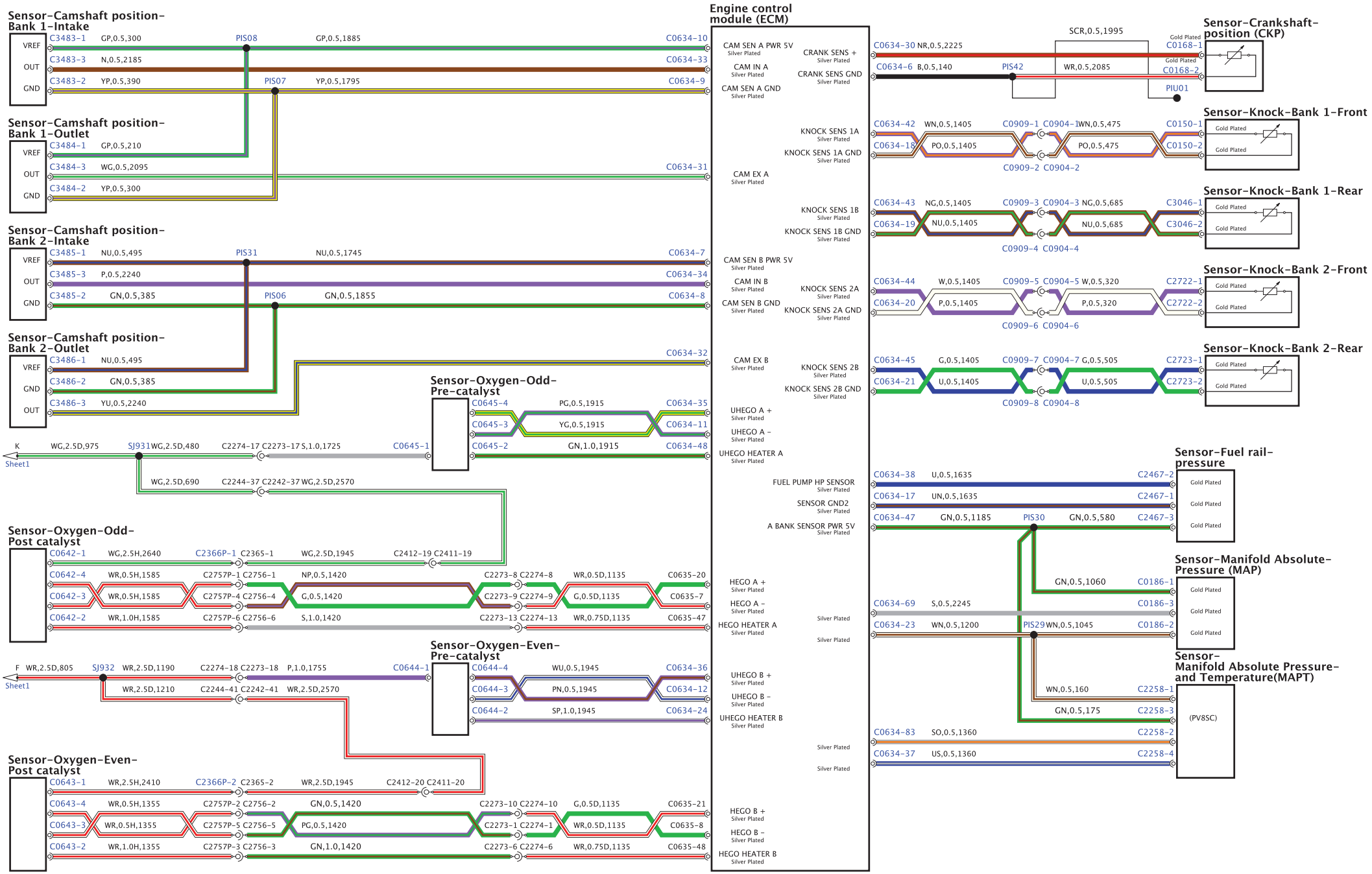

BH42-70032-K-A-01-06-Service (L322-11MY-JOB1)

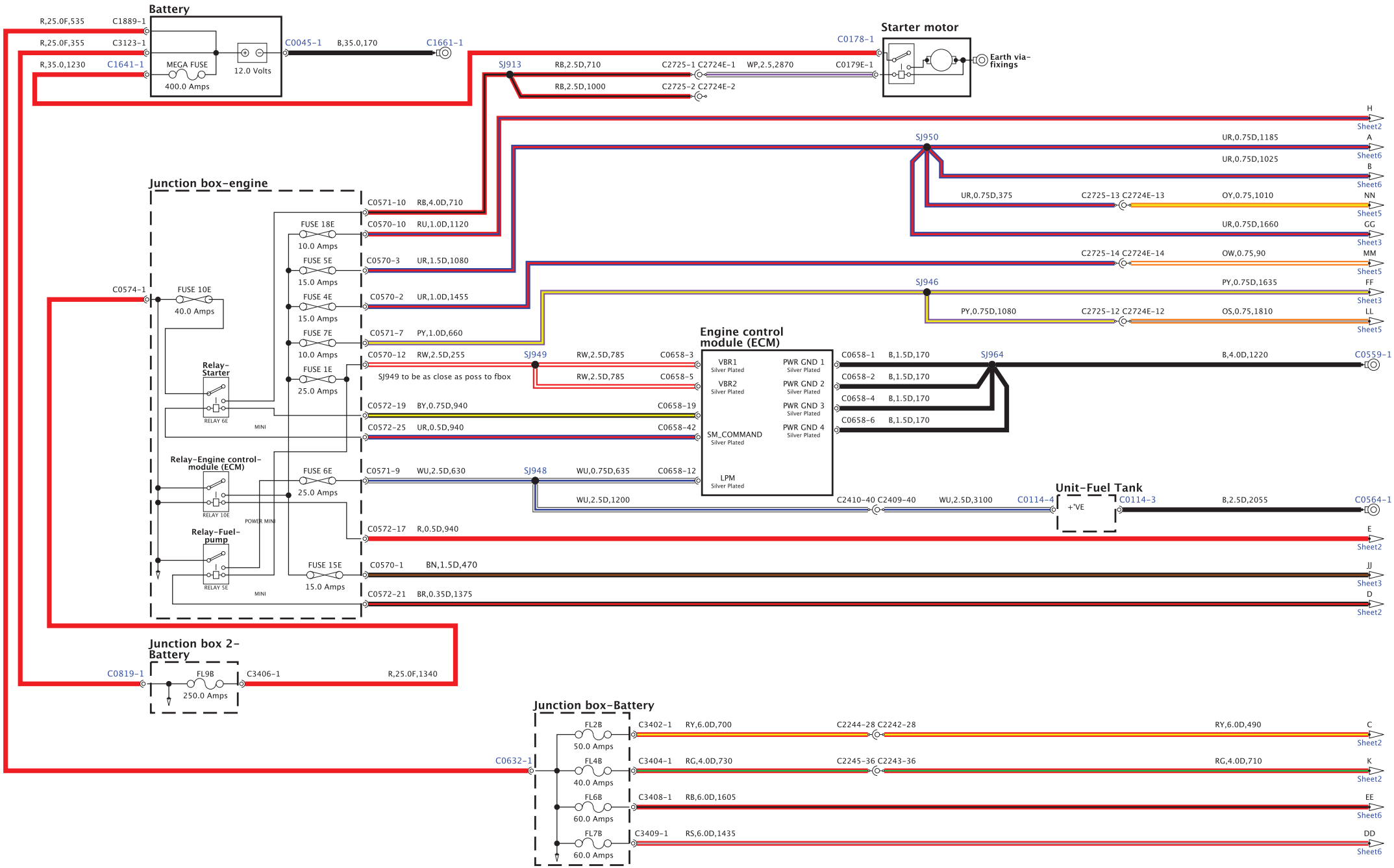

BH42-70032-K-A-02-06-Service (L322-11MY-JOB1)

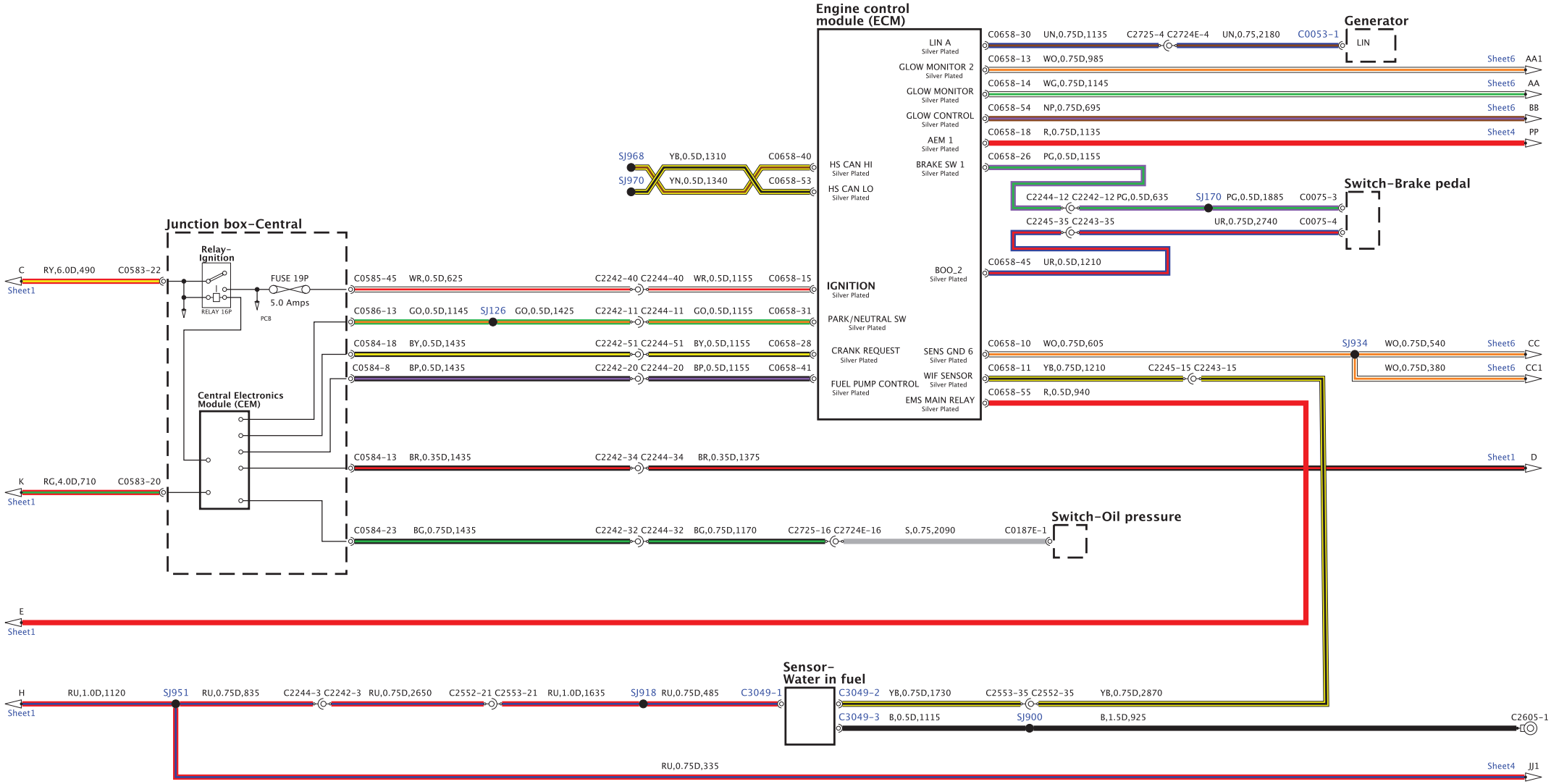

BH42-70032-K-A-03-06-Service (L322-11MY-JOB1)

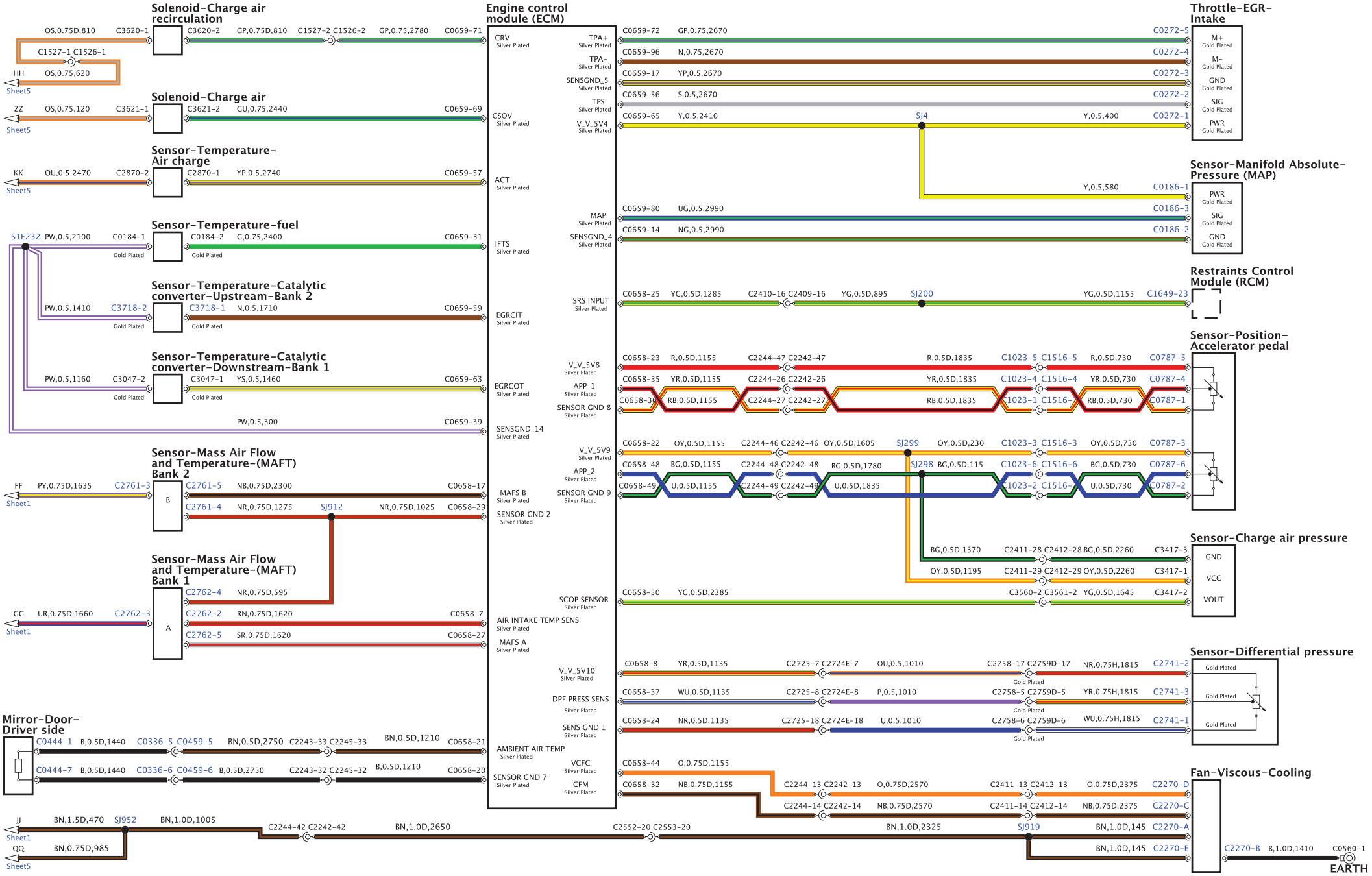

BH42-70032-K-A-04-06-Service (L322-11MY-JO81)

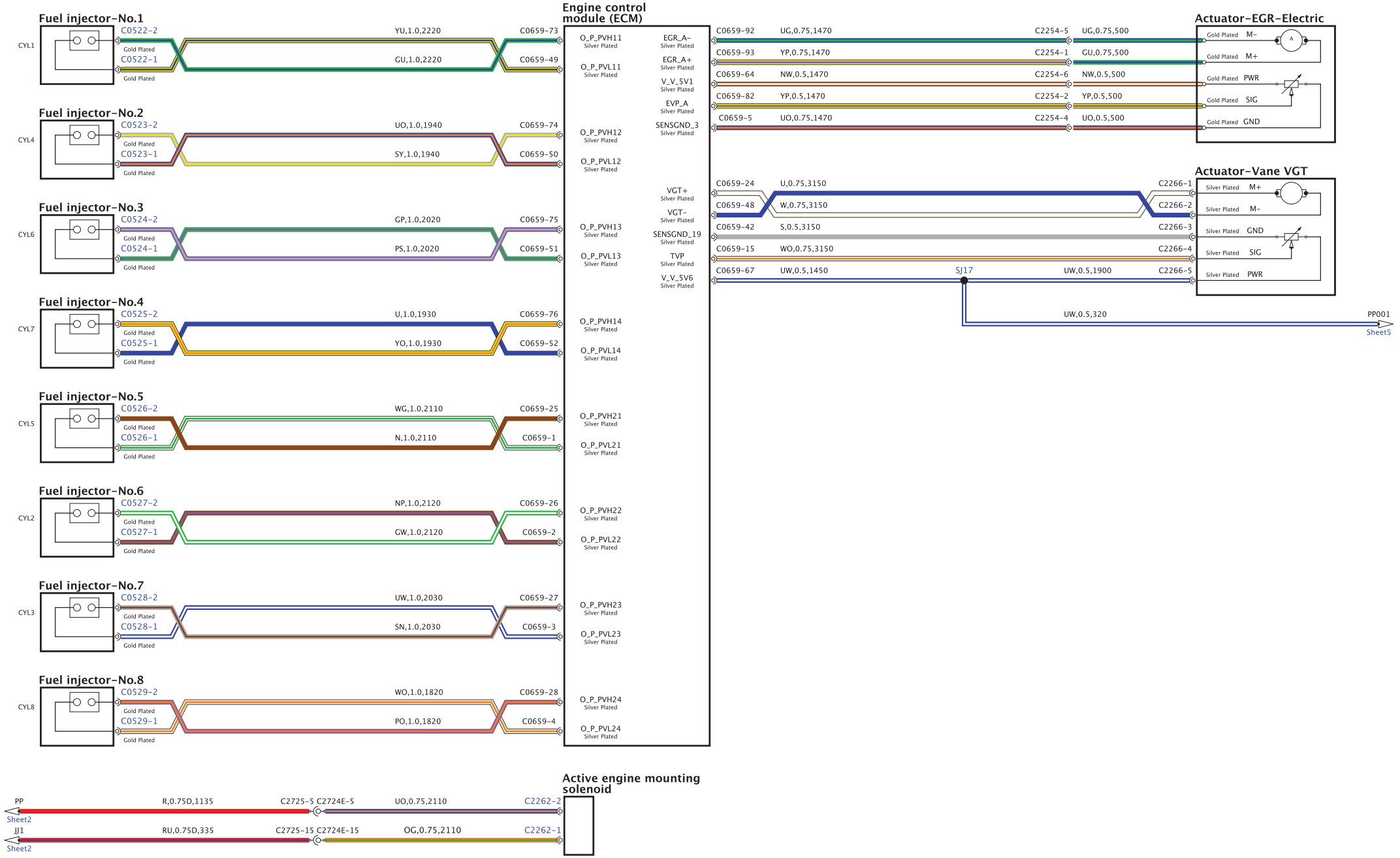

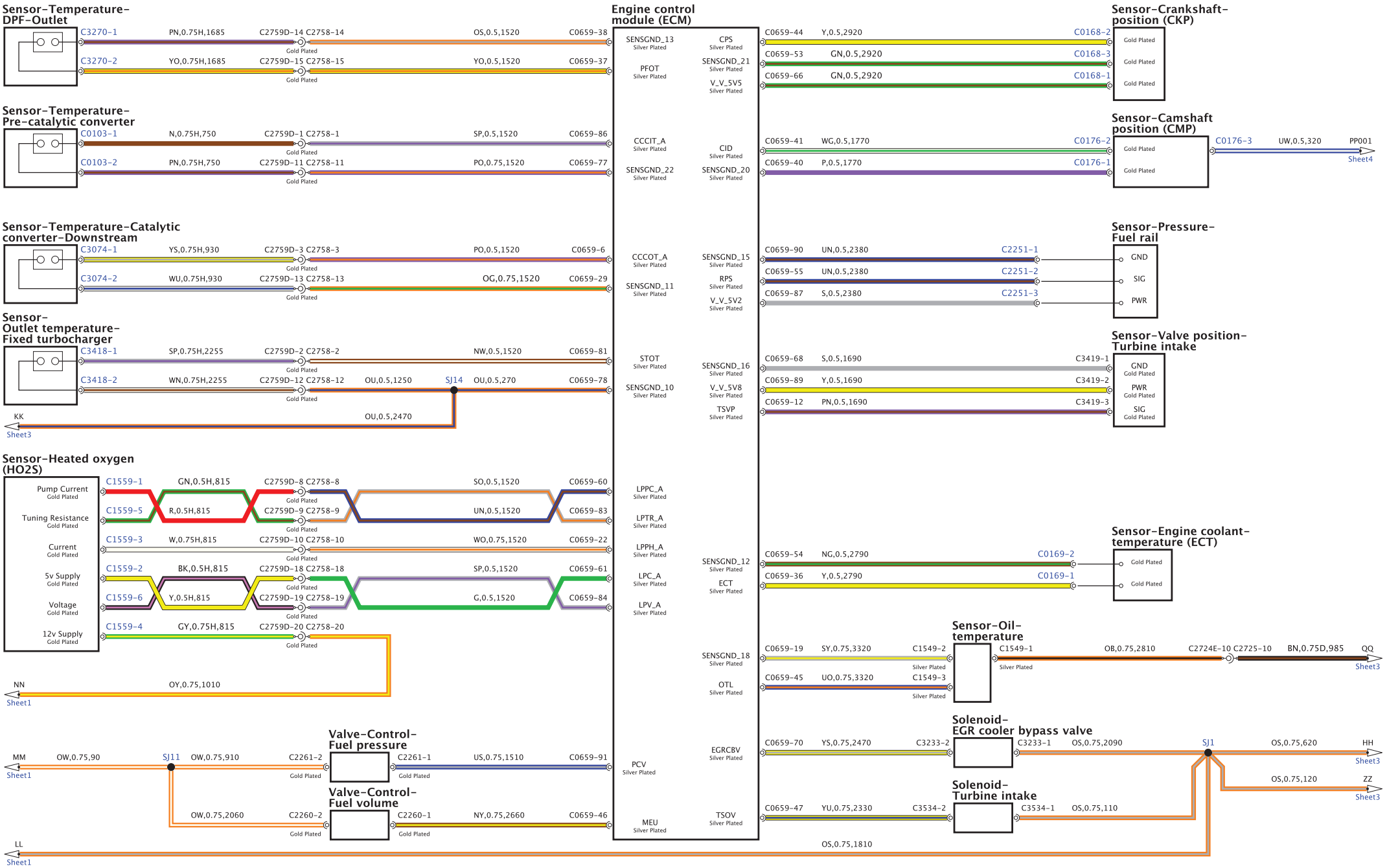
Engine control module (ECM)
Sensor-Temperature-DPF-Outlet
C3270-1
PN,0.75H,1685
C2759D-14 C2758-14
OS,0.5,1520
C0659-38
C3270-2
YO,0.75H,1685
C2759D-15 C2758-15
YO,0.5,1520
C0659-37
Gold Plated
Sensor-Temperature-Pre-catalytic converter
C0103-1
N,0.75H,750
C2759D-1 C2758-1
SP,0.5,1520
C0659-86
C0103-2
PN,0.75H,750
C2759D-11 C2758-11
PO,0.75,1520
C0659-77
Sensor-Temperature-Catalytic converter-Downstream
C3074-1
YS,0.75H,930
C2759D-3 C2758-3
PO,0.5,1520
C0659-6
C3074-2
WU,0.75H,930
C2759D-13 C2758-13
OG,0.75,1520
C0659-29
Sensor-Outlet temperature-Fixed turbocharger
C3418-1
SP,0.75H,2255
C2759D-2 C2758-2
NW,0.5,1520
C0659-81
C3418-2
WN,0.75H,2255
C2759D-12 C2758-12
OU,0.5,1250
SJ14
OU,0.5,270
C0659-78
KK
OU,0.5,2470
Sheet3
Sensor-Heated oxygen (HO2S)
Pump Current
Tuning Resistance
Current
5v Supply
Voltage
12v Supply
Gold Plated
C1559-1
GN,0.5H,815
C2759D-8 C2758-8
SO,0.5,1520
C0659-60
C1559-5
R,0.5H,815
C2759D-9 C2758-9
UN,0.5,1520
C0659-83
C1559-3
W,0.75H,815
C2759D-10 C2758-10
WO,0.75,1520
C0659-22
C1559-2
BK,0.5H,815
C2759D-18 C2758-18
SP,0.5,1520
C0659-61
C1559-6
Y,0.5H,815
C2759D-19 C2758-19
G,0.5,1520
C0659-84
C1559-4
GY,0.75H,815
C2759D-20 C2758-20
NN
OY,0.75,1010
Sheet1
Valve-Control-Fuel pressure
Valve-Control-Fuel volume
MM
OW,0.75,90
SJ11
OW,0.75,910
C2261-2
C2261-1
US,0.75,1510
C0659-91
OW,0.75,2060
C2260-2
C2260-1
NY,0.75,2660
C0659-46
LL
OS,0.75,1810
SENSGND_13
CPS
PFOT
V_V_5V5
CCCIT_A
CID
SENSGND_22
SENSGND_20
CCCOT_A
SENSGND_15
SENSGND_11
RPS
V_V_5V2
STOT
SENSGND_16
SENSGND_10
V_V_5V8
TSVP
LPPC_A
LPTR_A
LPPH_A
LPC_A
LPV_A
SENSGND_12
ECT
SENSGND_18
OTL
EGRCBV
PCV
MEU
TSOV
Silver Plated
Sensor-Crankshaft-position (CKP)
C0659-44
Y,0.5,2920
C0168-2
C0659-53
GN,0.5,2920
C0168-3
C0659-66
GN,0.5,2920
C0168-1
Sensor-Camshaft position (CMP)
C0659-41
WG,0.5,1770
C0176-2
C0659-40
P,0.5,1770
C0176-1
C0176-3
UW,0.5,320
PP001
Sheet4
Sensor-Pressure-Fuel rail
C0659-90
UN,0.5,2380
C2251-1
C0659-55
UN,0.5,2380
C2251-2
C0659-87
S,0.5,2380
C2251-3
GND
SIG
PWR
Sensor-Valve position-Turbine intake
C0659-68
S,0.5,1690
C3419-1
C0659-89
Y,0.5,1690
C3419-2
C0659-12
PN,0.5,1690
C3419-3
GND
PWR
SIG
Gold Plated
Sensor-Engine coolant-temperature (ECT)
C0659-54
NG,0.5,2790
C0169-2
C0659-36
Y,0.5,2790
C0169-1
Sensor-Oil-temperature
C0659-19
SY,0.75,3320
C1549-2
C1549-1
OB,0.75,2810
C2724E-10 C2725-10
BN,0.75D,985
QQ
Sheet3
C0659-45
UO,0.75,3320
C1549-3
Silver Plated
Solenoid-EGR cooler bypass valve
C0659-70
YS,0.75,2470
C3233-2
C3233-1
OS,0.75,2090
SJ1
OS,0.75,620
HH
Sheet3
OS,0.75,120
ZZ
Sheet3
Solenoid-Turbine intake
C0659-47
YU,0.75,2330
C3534-2
C3534-1
OS,0.75,110

BH42-70032-K-A-06-06-Service (L322-11MY-JOB1)

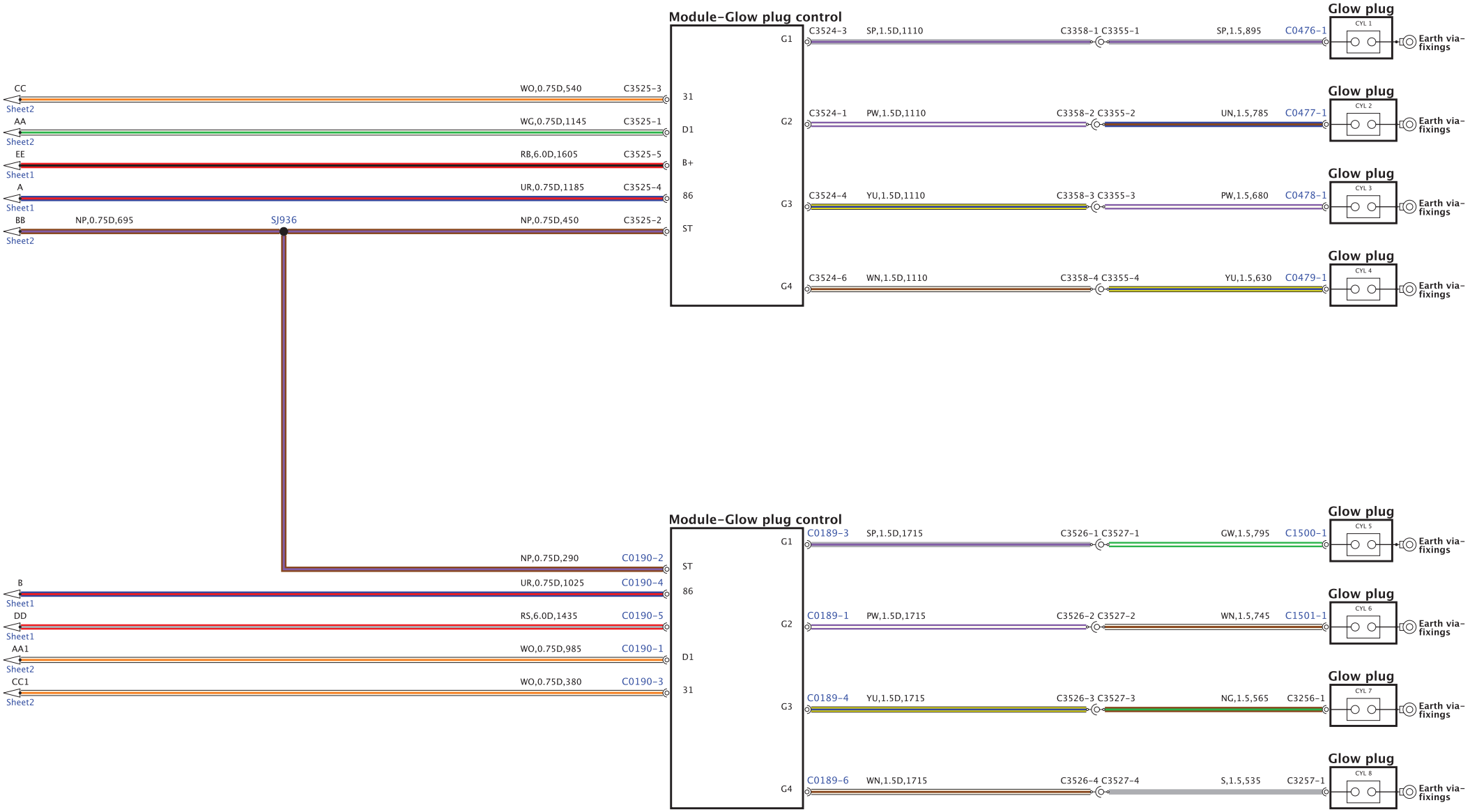

BH42-70041-B-A-01-02-Service (L322-11MY-JOB1)

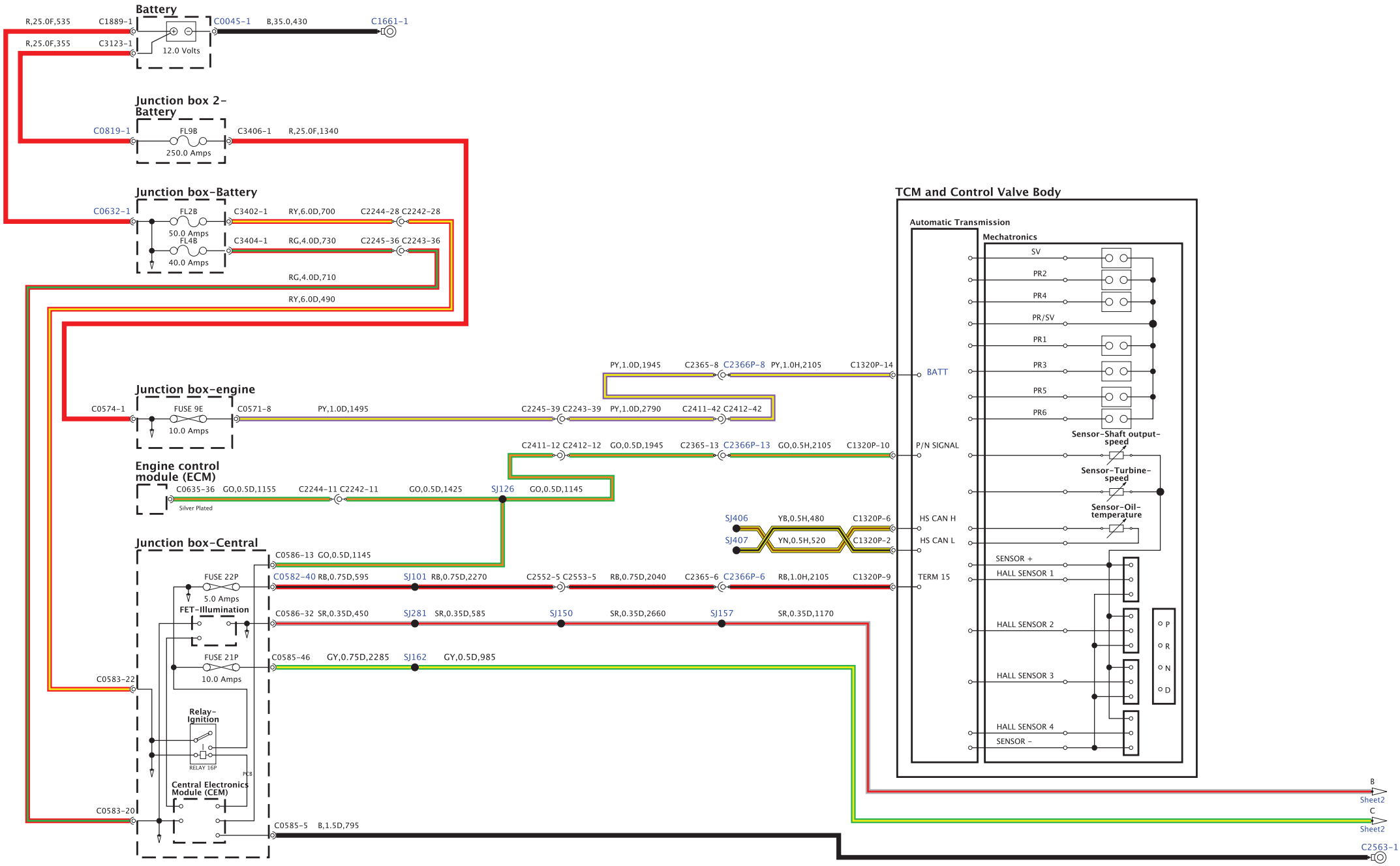

BH42-70041-B-A-02-02-Service (L322-11MY-JOB1)

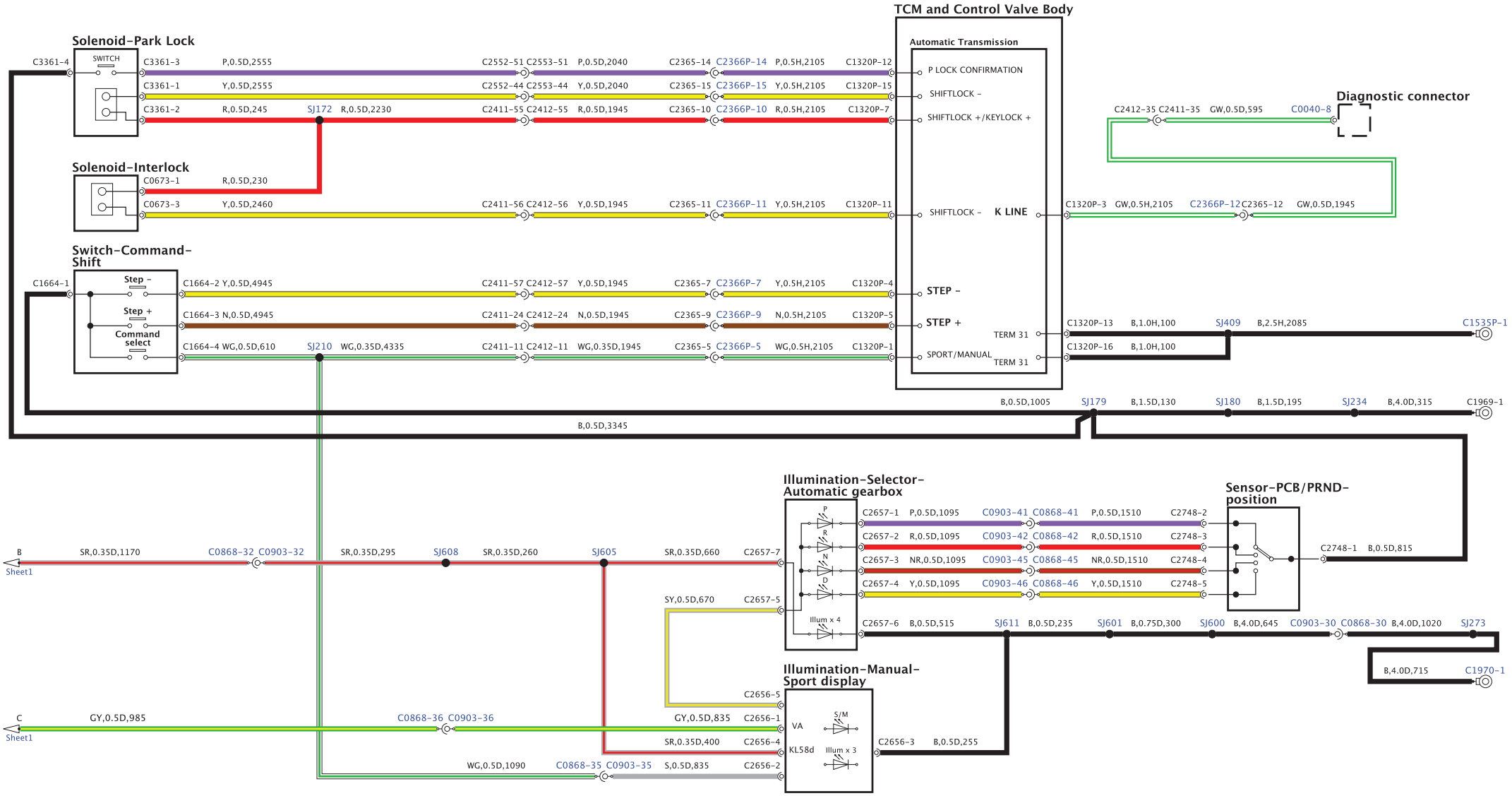

BH42-70046-A-A-01-02-Service (L322-11MY-JOB1)

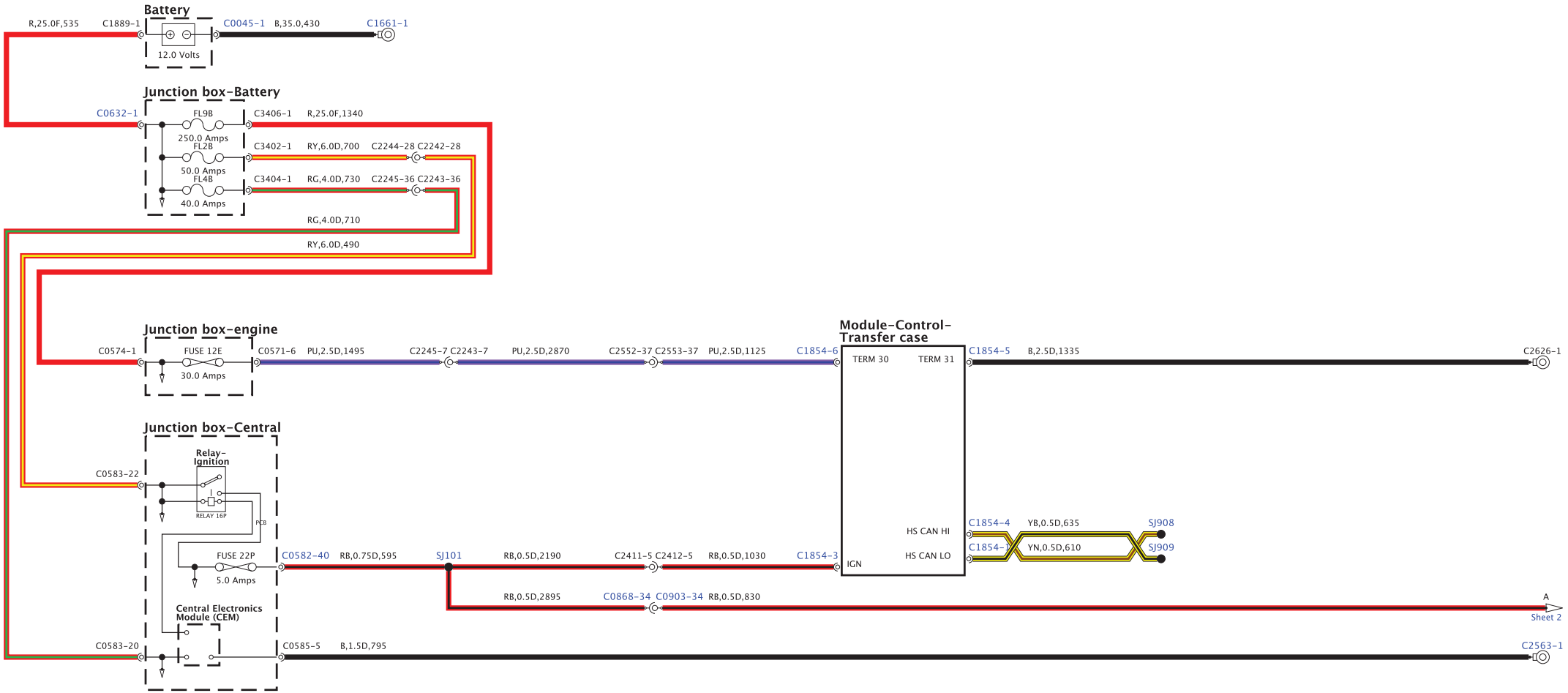

BH42-70046-A-A-02-02-Service (L322-11MY-JOB1)

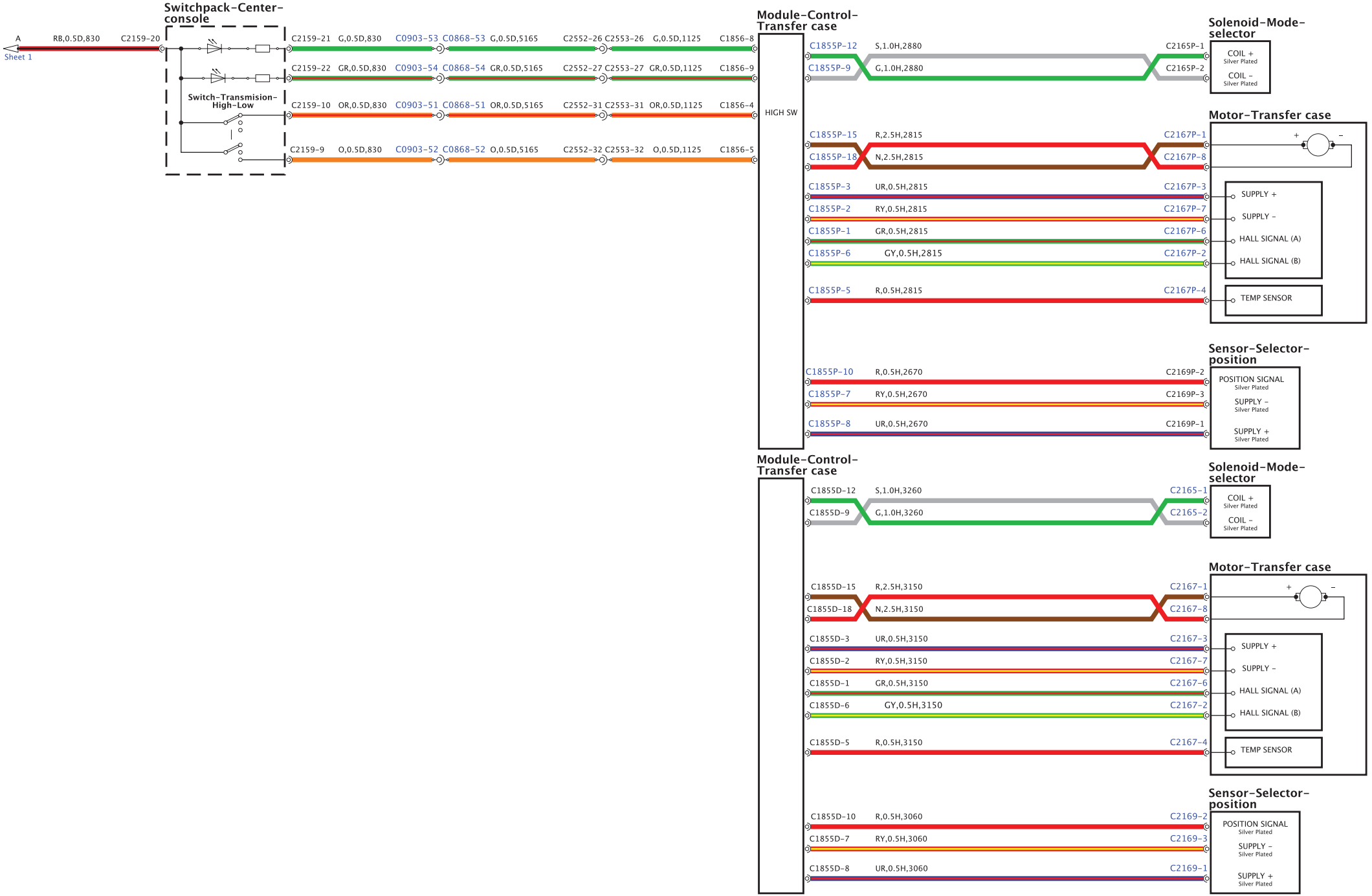

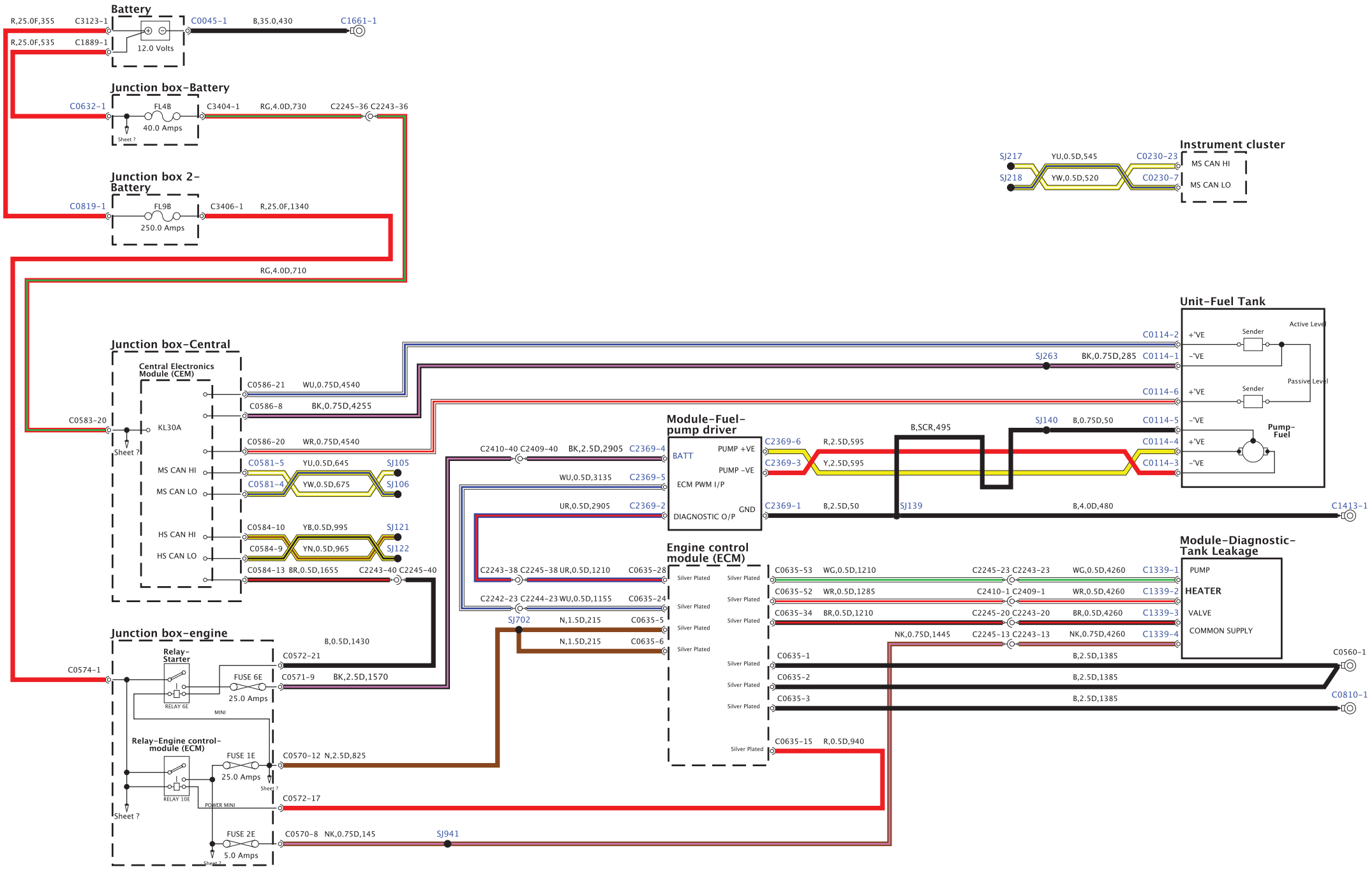
Battery
R,25.0F,355
C3123-1
C0045-1
B,35.0,430
C1661-1
R,25.0F,535
C1889-1
12.0 Volts
Junction box-Battery
C0632-1
FL4B
C3404-1
RG,4.0D,730
C2245-36 C2243-36
40.0 Amps
Sheet ?
Junction box 2-Battery
C0819-1
FL9B
C3406-1
R,25.0F,1340
250.0 Amps
RG,4.0D,710
Instrument cluster
SJ217
YU,0.5D,545
C0230-23
MS CAN HI
SJ218
YW,0.5D,520
C0230-7
MS CAN LO
Unit-Fuel Tank
C0114-2
+'VE
Sender
Active Level
SJ263
BK,0.75D,285
C0114-1
-'VE
C0114-6
+'VE
Sender
Passive Level
C0114-5
-'VE
Pump-Fuel
C0114-4
+'VE
C0114-3
-'VE
Junction box-Central
Central Electronics Module (CEM)
C0586-21
WU,0.75D,4540
C0586-8
BK,0.75D,4255
C0583-20
KL30A
Sheet ?
C0586-20
WR,0.75D,4540
MS CAN HI
C0581-5
YU,0.5D,645
SJ105
MS CAN LO
C0581-4
YW,0.5D,675
SJ106
HS CAN HI
C0584-10
YB,0.5D,995
SJ121
HS CAN LO
C0584-9
YN,0.5D,965
SJ122
C0584-13
BR,0.5D,1655
C2243-40 C2245-40
Module-Fuel-pump driver
C2410-40 C2409-40
BK,2.5D,2905
C2369-4
BATT
PUMP +VE
C2369-6
R,2.5D,595
B,SCR,495
SJ140
B,0.75D,50
PUMP -VE
C2369-3
Y,2.5D,595
WU,0.5D,3135
C2369-5
ECM PWM I/P
UR,0.5D,2905
C2369-2
DIAGNOSTIC O/P
GND
C2369-1
B,2.5D,50
SJ139
B,4.0D,480
C1413-1
Engine control module (ECM)
C2243-38 C2245-38
UR,0.5D,1210
C0635-28
C2242-23 C2244-23
WU,0.5D,1155
C0635-24
SJ702
N,1.5D,215
C0635-5
N,1.5D,215
C0635-6
Silver Plated
C0635-53
WG,0.5D,1210
C2245-23 C2243-23
WG,0.5D,4260
C1339-1
C0635-52
WR,0.5D,1285
C2410-1 C2409-1
WR,0.5D,4260
C1339-2
C0635-34
BR,0.5D,1210
C2245-20 C2243-20
BR,0.5D,4260
C1339-3
NK,0.75D,1445
C2245-13 C2243-13
NK,0.75D,4260
C1339-4
C0635-1
B,2.5D,1385
C0560-1
C0635-2
B,2.5D,1385
C0635-3
B,2.5D,1385
C0810-1
C0635-15
R,0.5D,940
Module-Diagnostic-Tank Leakage
PUMP
HEATER
VALVE
COMMON SUPPLY
Junction box-engine
B,0.5D,1430
Relay-Starter
C0572-21
C0574-1
FUSE 6E
C0571-9
BK,2.5D,1570
25.0 Amps
RELAY 6E
MINI
Relay-Engine control-module (ECM)
FUSE 1E
C0570-12
N,2.5D,825
25.0 Amps
Sheet ?
RELAY 10E
POWER MINI
C0572-17
Sheet ?
FUSE 2E
C0570-8
NK,0.75D,145
SJ941
5.0 Amps
Sheet ?

BH42-70036-C-A-01-01-Service (L322-11MY-JOB1)

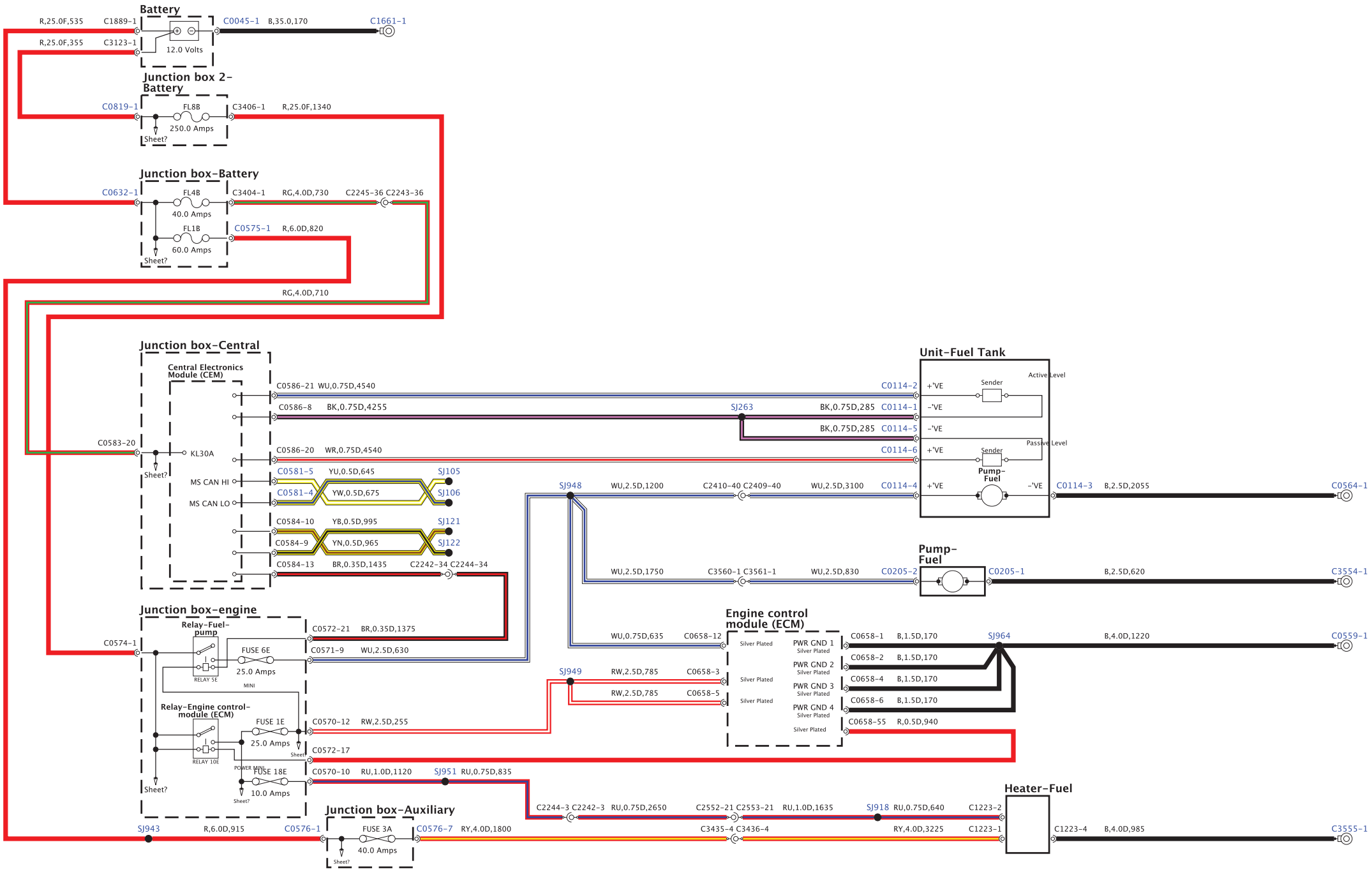

BH42-70486-A-A-01-01-Service (L322-11MY-JOB1)

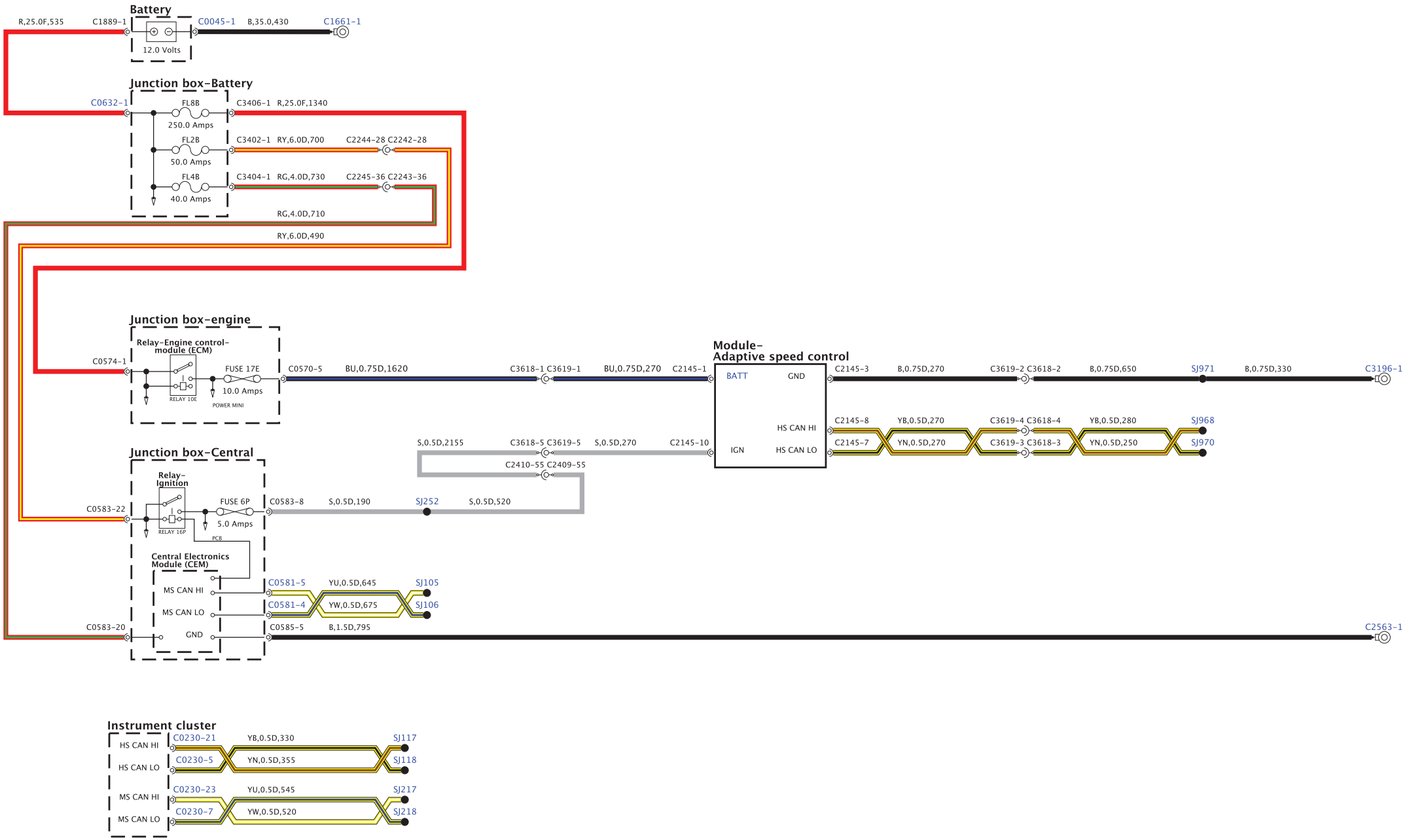

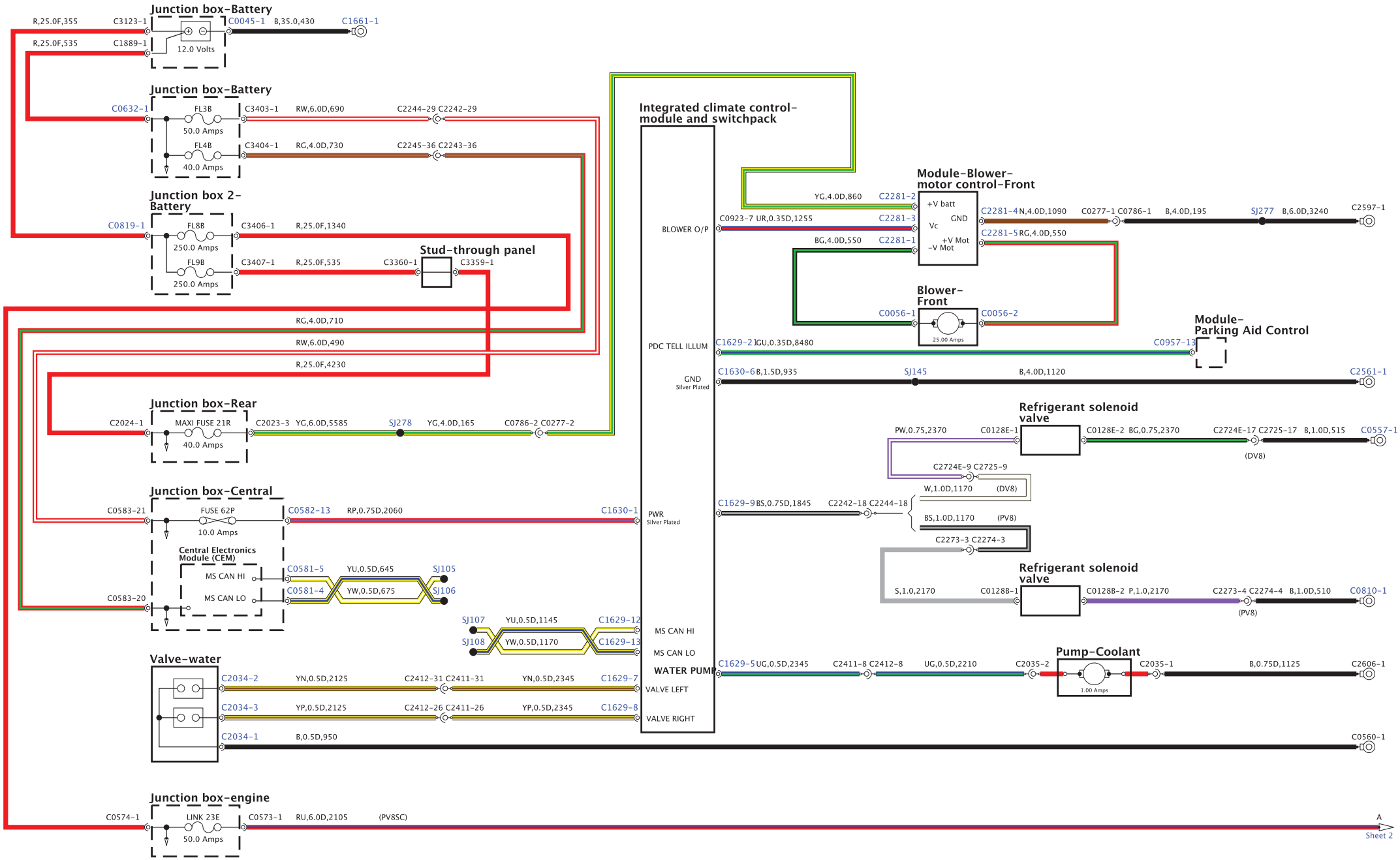
Junction box-Battery
R,25.0F,355
C3123-1
C0045-1
B,35.0,430
C1661-1
R,25.0F,535
C1889-1
12.0 Volts
Junction box-Battery
C0632-1
FL3B
C3403-1
RW,6.0D,690
C2244-29 C2242-29
50.0 Amps
FL4B
C3404-1
RG,4.0D,730
C2245-36 C2243-36
40.0 Amps
Junction box 2-Battery
C0819-1
FL8B
C3406-1
R,25.0F,1340
250.0 Amps
FL9B
C3407-1
R,25.0F,535
C3360-1
C3359-1
250.0 Amps
Stud-through panel
RG,4.0D,710
RW,6.0D,490
R,25.0F,4230
Junction box-Rear
C2024-1
MAXI FUSE 21R
C2023-3
YG,6.0D,5585
SJ278
YG,4.0D,165
C0786-2 C0277-2
40.0 Amps
Junction box-Central
C0583-21
FUSE 62P
C0582-13
RP,0.75D,2060
C1630-1
10.0 Amps
Central Electronics Module (CEM)
MS CAN HI
MS CAN LO
C0581-5
YU,0.5D,645
SJ105
C0581-4
YW,0.5D,675
SJ106
C0583-20
SJ107
YU,0.5D,1145
C1629-12
SJ108
YW,0.5D,1170
C1629-13
Valve-water
C2034-2
YN,0.5D,2125
C2412-31 C2411-31
YN,0.5D,2345
C1629-7
C2034-3
YP,0.5D,2125
C2412-26 C2411-26
YP,0.5D,2345
C1629-8
C2034-1
B,0.5D,950
Junction box-engine
C0574-1
LINK 23E
C0573-1
RU,6.0D,2105
(PV8SC)
50.0 Amps
Integrated climate control-module and switchpack
BLOWER O/P
PDC TELL ILLUM
GND
Silver Plated
PWR
Silver Plated
MS CAN HI
MS CAN LO
WATER PUMP
VALVE LEFT
VALVE RIGHT
Module-Blower-motor control-Front
YG,4.0D,860
C2281-2
C0923-7 UR,0.35D,1255
C2281-3
BG,4.0D,550
C2281-1
+V batt
GND
Vc
+V Mot
-V Mot
C2281-4 N,4.0D,1090
C0277-1 C0786-1
B,4.0D,195
SJ277
B,6.0D,3240
C2597-1
C2281-5 RG,4.0D,550
Blower-Front
C0056-1
C0056-2
25.00 Amps
Module-Parking Aid Control
C1629-21 GU,0.35D,8480
C0957-13
C1630-6 B,1.5D,935
SJ145
B,4.0D,1120
C2561-1
Refrigerant solenoid valve
PW,0.75,2370
C0128E-1
C0128E-2 BG,0.75,2370
C2724E-17 C2725-17
B,1.0D,515
C0557-1
(DV8)
C2724E-9 C2725-9
W,1.0D,1170
(DV8)
C1629-9 BS,0.75D,1845
C2242-18 C2244-18
BS,1.0D,1170
(PV8)
C2273-3 C2274-3
Refrigerant solenoid valve
S,1.0,2170
C0128B-1
C0128B-2 P,1.0,2170
C2273-4 C2274-4
B,1.0D,510
C0810-1
(PV8)
Pump-Coolant
C1629-5 UG,0.5D,2345
C2411-8 C2412-8
UG,0.5D,2210
C2035-2
1.00 Amps
C2035-1
B,0.75D,1125
C2606-1
C0560-1
A
Sheet 2

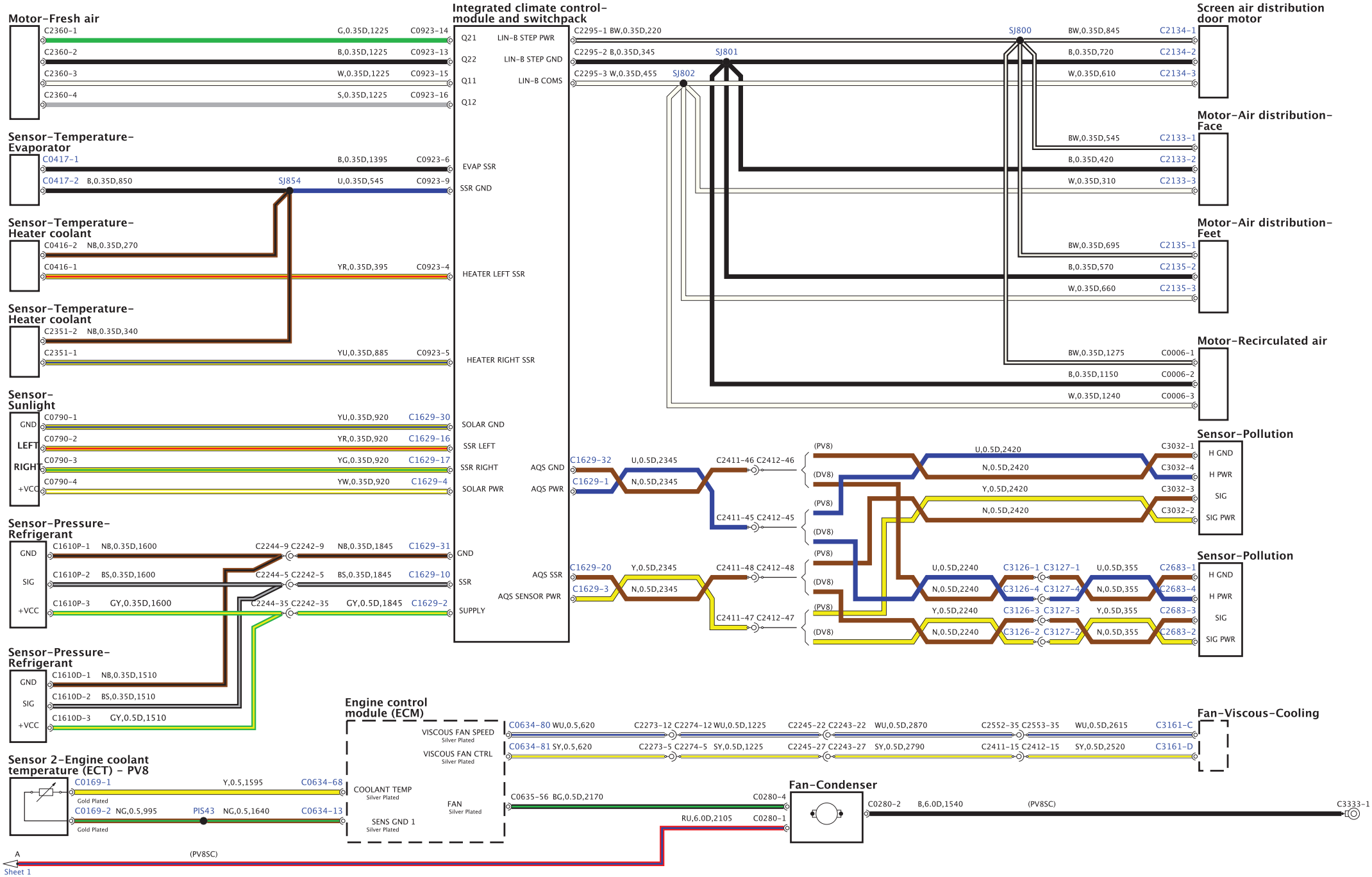
Motor-Fresh air
C2360-1 G,0.35D,1225 C0923-14
C2360-2 B,0.35D,1225 C0923-13
C2360-3 W,0.35D,1225 C0923-15
C2360-4 S,0.35D,1225 C0923-16
Integrated climate control-module and switchpack
Q21 LIN-B STEP PWR
Q22 LIN-B STEP GND
Q11 LIN-B COMS
Q12
Screen air distribution door motor
C2295-1 BW,0.35D,220
C2295-2 B,0.35D,345
C2295-3 W,0.35D,455
SJ800
SJ801
SJ802
BW,0.35D,845 C2134-1
B,0.35D,720 C2134-2
W,0.35D,610 C2134-3
Sensor-Temperature-Evaporator
C0417-1 B,0.35D,1395 C0923-6
C0417-2 B,0.35D,850 SJ854 U,0.35D,545 C0923-9
EVAP SSR
SSR GND
Motor-Air distribution-Face
BW,0.35D,545 C2133-1
B,0.35D,420 C2133-2
W,0.35D,310 C2133-3
Sensor-Temperature-Heater coolant
C0416-2 NB,0.35D,270
C0416-1 YR,0.35D,395 C0923-4
HEATER LEFT SSR
Motor-Air distribution-Feet
BW,0.35D,695 C2135-1
B,0.35D,570 C2135-2
W,0.35D,660 C2135-3
Sensor-Temperature-Heater coolant
C2351-2 NB,0.35D,340
C2351-1 YU,0.35D,885 C0923-5
HEATER RIGHT SSR
Motor-Recirculated air
BW,0.35D,1275 C0006-1
B,0.35D,1150 C0006-2
W,0.35D,1240 C0006-3
Sensor-Sunlight
GND
LEFT
RIGHT
+VCC
C0790-1 YU,0.35D,920 C1629-30
C0790-2 YR,0.35D,920 C1629-16
C0790-3 YG,0.35D,920 C1629-17
C0790-4 YW,0.35D,920 C1629-4
SOLAR GND
SSR LEFT
SSR RIGHT
SOLAR PWR
Sensor-Pollution
H GND
H PWR
SIG
SIG PWR
AQS GND
AQS PWR
C1629-32 U,0.5D,2345 C2411-46 C2412-46
C1629-1 N,0.5D,2345 C2411-45 C2412-45
(PV8)
(DV8)
U,0.5D,2420
N,0.5D,2420
Y,0.5D,2420
C3032-1
C3032-4
C3032-3
C3032-2
Sensor-Pressure-Refrigerant
GND
SIG
+VCC
C1610P-1 NB,0.35D,1600 C2244-9 C2242-9 NB,0.35D,1845 C1629-31
C1610P-2 BS,0.35D,1600 C2244-5 C2242-5 BS,0.35D,1845 C1629-10
C1610P-3 GY,0.35D,1600 C2244-35 C2242-35 GY,0.5D,1845 C1629-2
GND
SSR
SUPPLY
AQS SSR
AQS SENSOR PWR
C1629-20 Y,0.5D,2345 C2411-48 C2412-48
C1629-3 N,0.5D,2345 C2411-47 C2412-47
U,0.5D,2240 C3126-1 C3127-1 U,0.5D,355 C2683-1
N,0.5D,2240 C3126-4 C3127-4 N,0.5D,355 C2683-4
Y,0.5D,2240 C3126-3 C3127-3 Y,0.5D,355 C2683-3
N,0.5D,2240 C3126-2 C3127-2 N,0.5D,355 C2683-2
Sensor-Pressure-Refrigerant
GND
SIG
+VCC
C1610D-1 NB,0.35D,1510
C1610D-2 BS,0.35D,1510
C1610D-3 GY,0.5D,1510
Engine control module (ECM)
VISCOUS FAN SPEED
Silver Plated
VISCOUS FAN CTRL
Silver Plated
COOLANT TEMP
Silver Plated
SENS GND 1
Silver Plated
FAN
Silver Plated
C0634-80 WU,0.5,620 C2273-12 C2274-12 WU,0.5D,1225 C2245-22 C2243-22 WU,0.5D,2870 C2552-35 C2553-35 WU,0.5D,2615 C3161-C
C0634-81 SY,0.5,620 C2273-5 C2274-5 SY,0.5D,1225 C2245-27 C2243-27 SY,0.5D,2790 C2411-15 C2412-15 SY,0.5D,2520 C3161-D
Fan-Viscous-Cooling
Sensor 2-Engine coolant temperature (ECT) - PV8
C0169-1 Y,0.5,1595 C0634-68
Gold Plated
C0169-2 NG,0.5,995 PIS43 NG,0.5,1640 C0634-13
Gold Plated
C0635-56 BG,0.5D,2170 C0280-4
RU,6.0D,2105 C0280-1
Fan-Condenser
C0280-2 B,6.0D,1540 (PV8SC) C3333-1
A
(PV8SC)
Sheet 1

BH42-70131-A-A-01-01-Service (L322-11MY-JOB1)

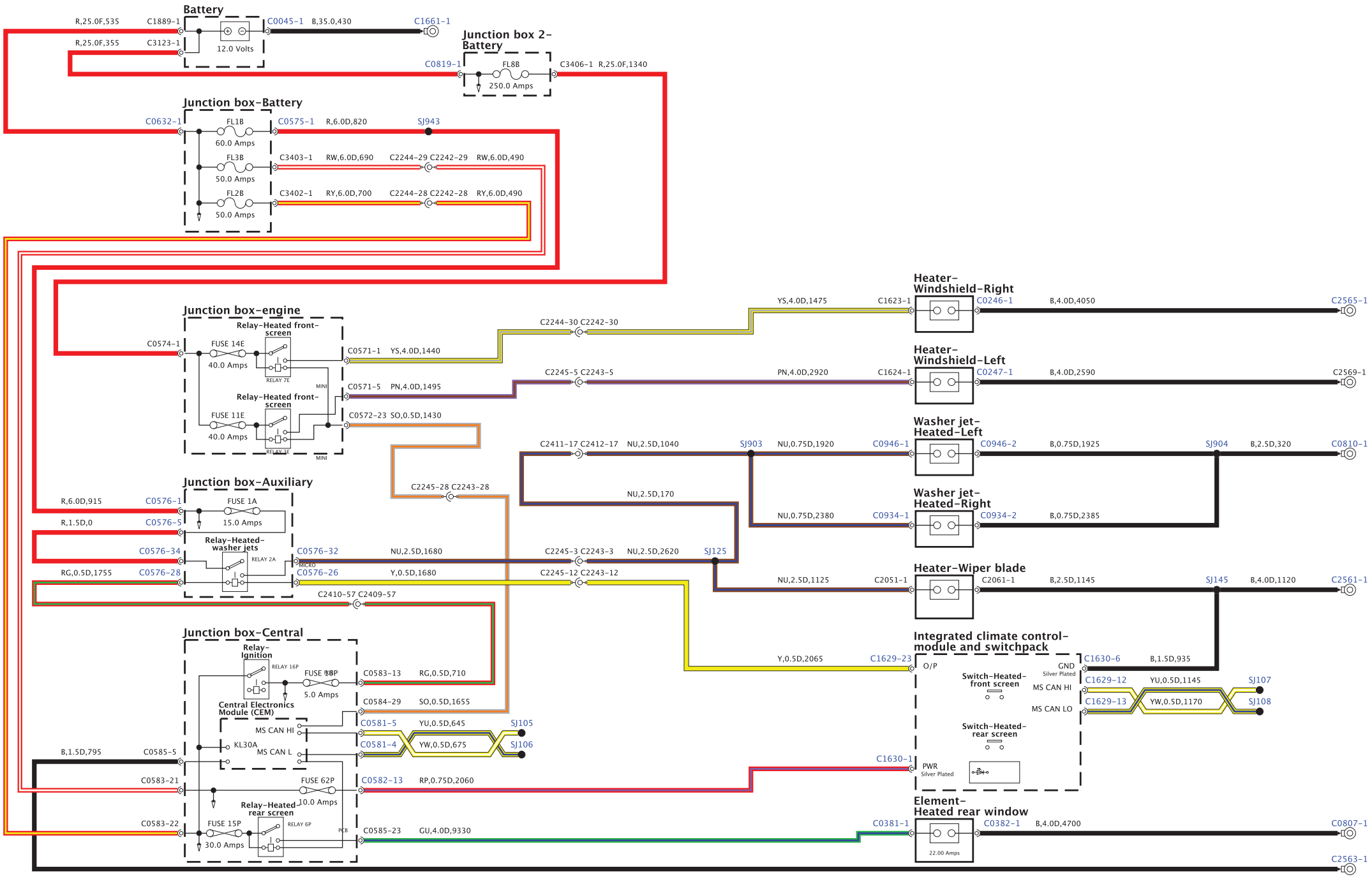

BH42-70295-A-A-01-02-Service (L322-11MY-JOB1)

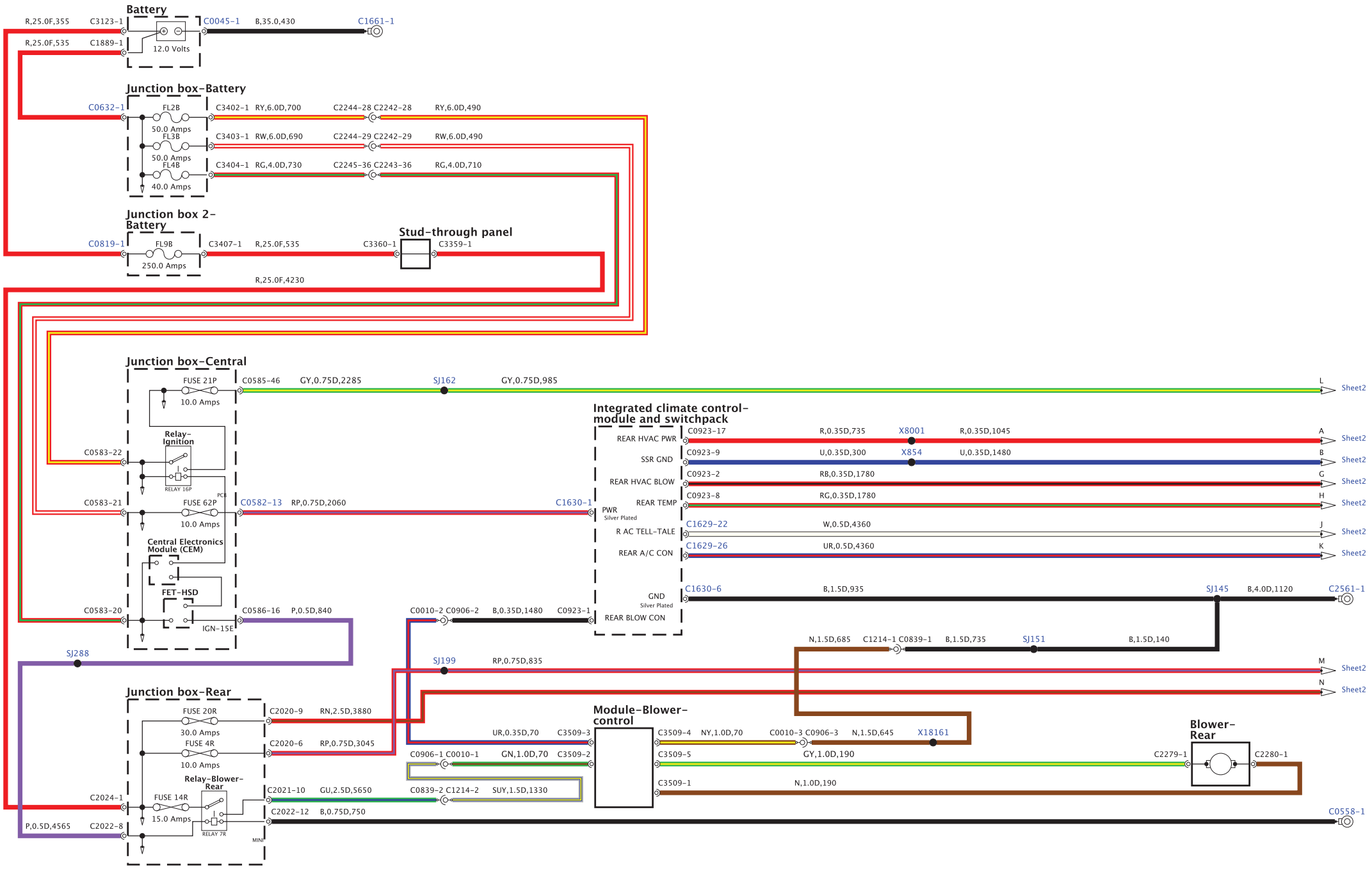

BH42-70295-A-A-02-02-Service (L322-11MY-JOB1)

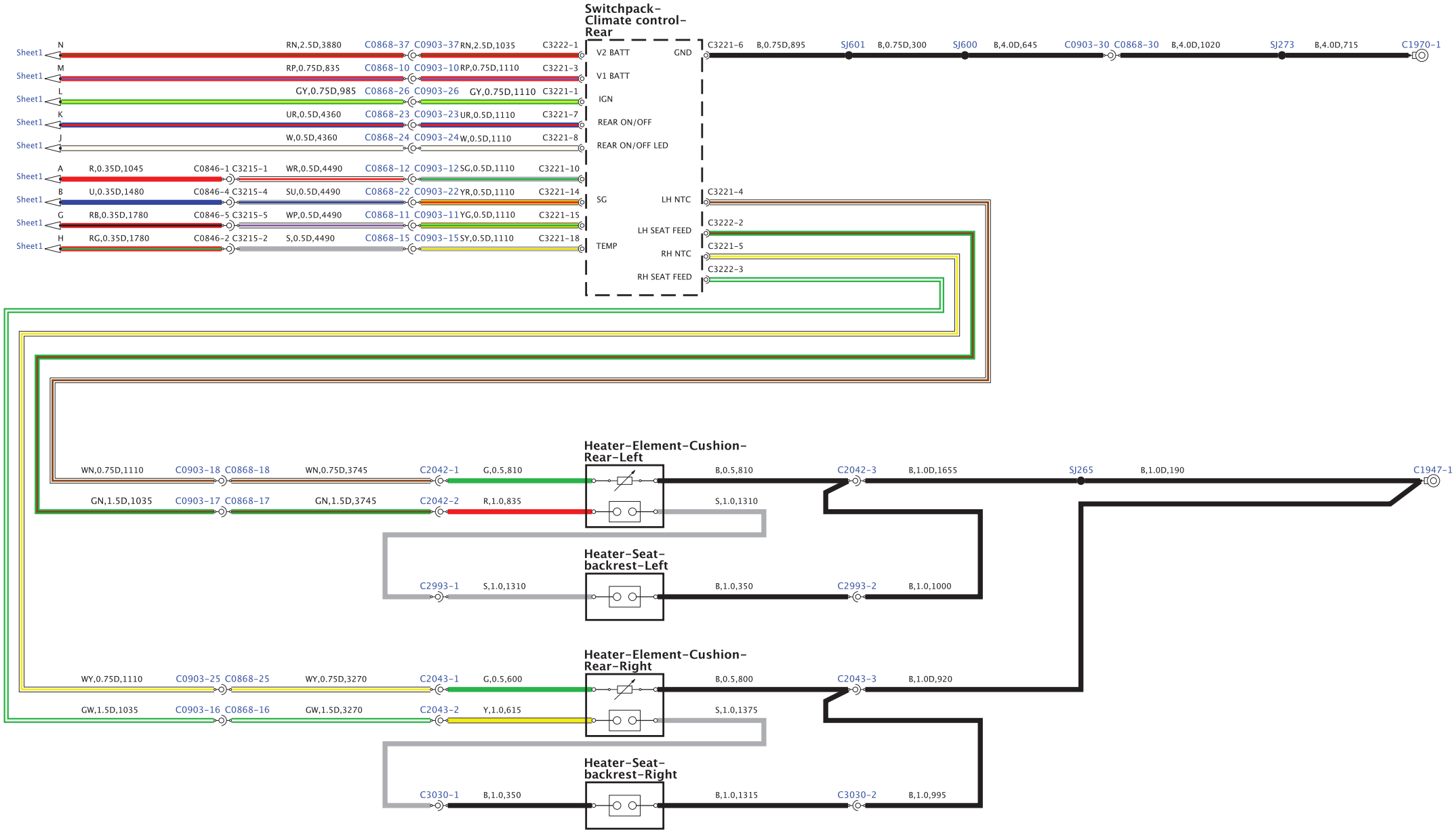

BH42-70295-B-A-01-03-Service (L322-11MY-JOB1)

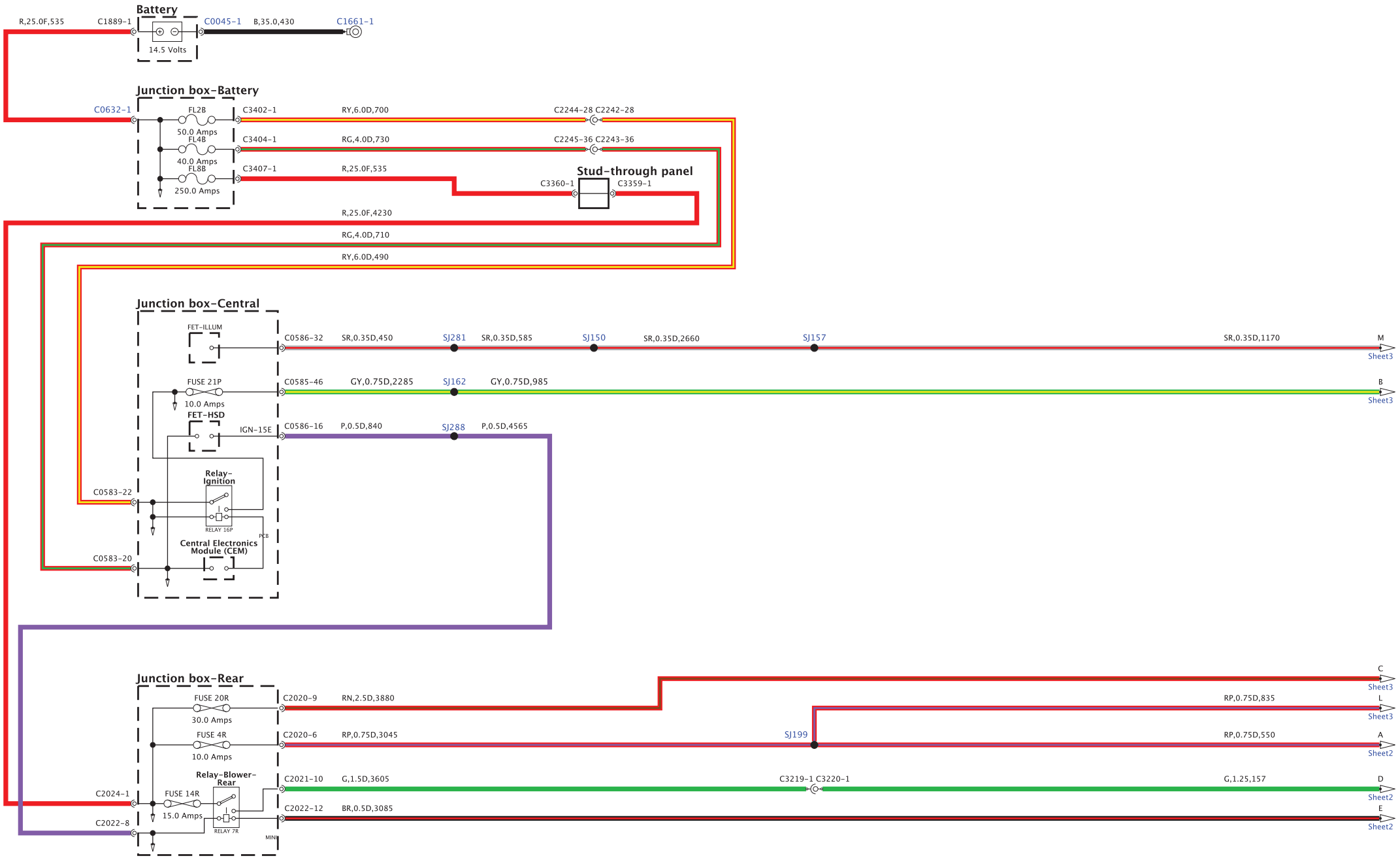

BH42-70295-B-A-02-03-Service (L322-11MY-JOB3)

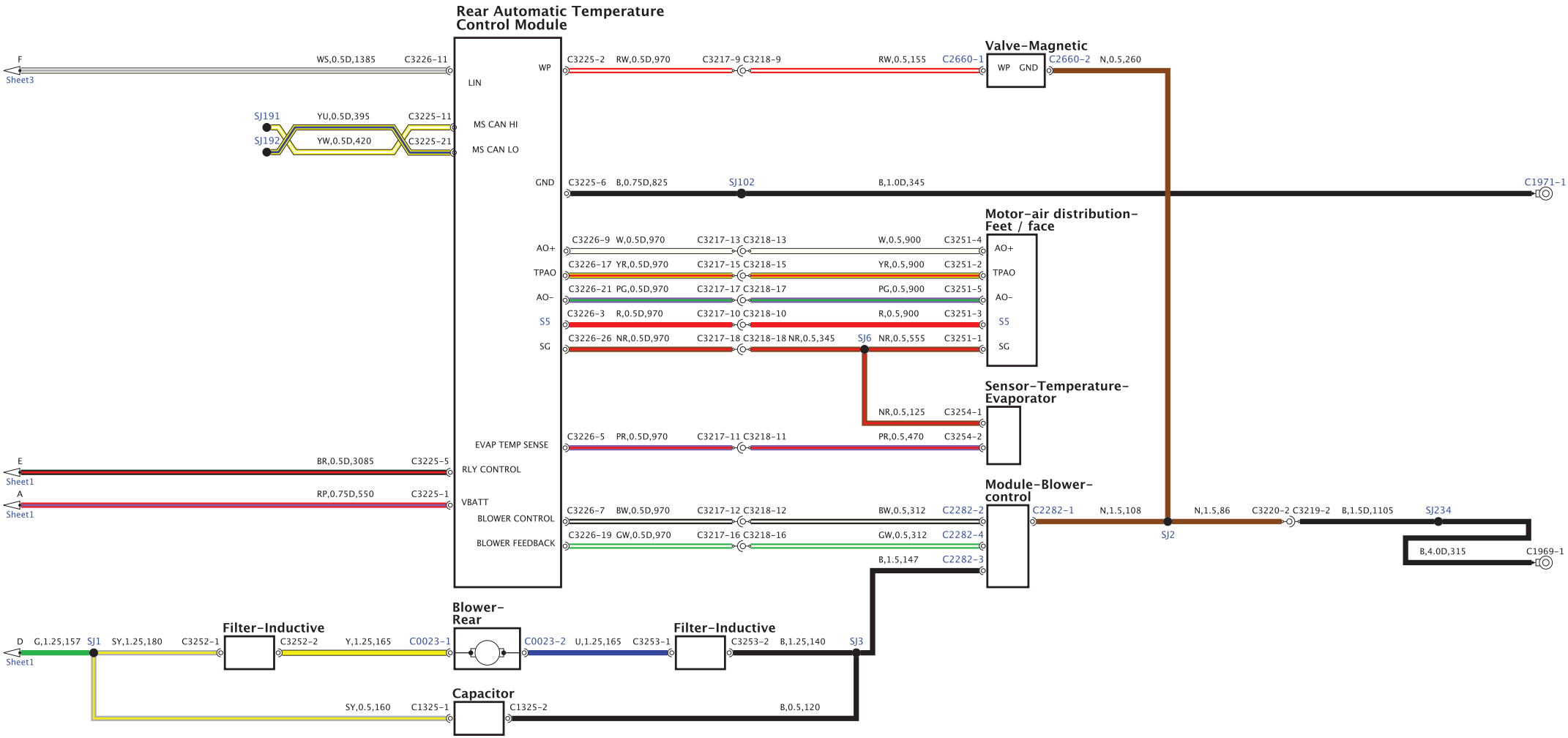

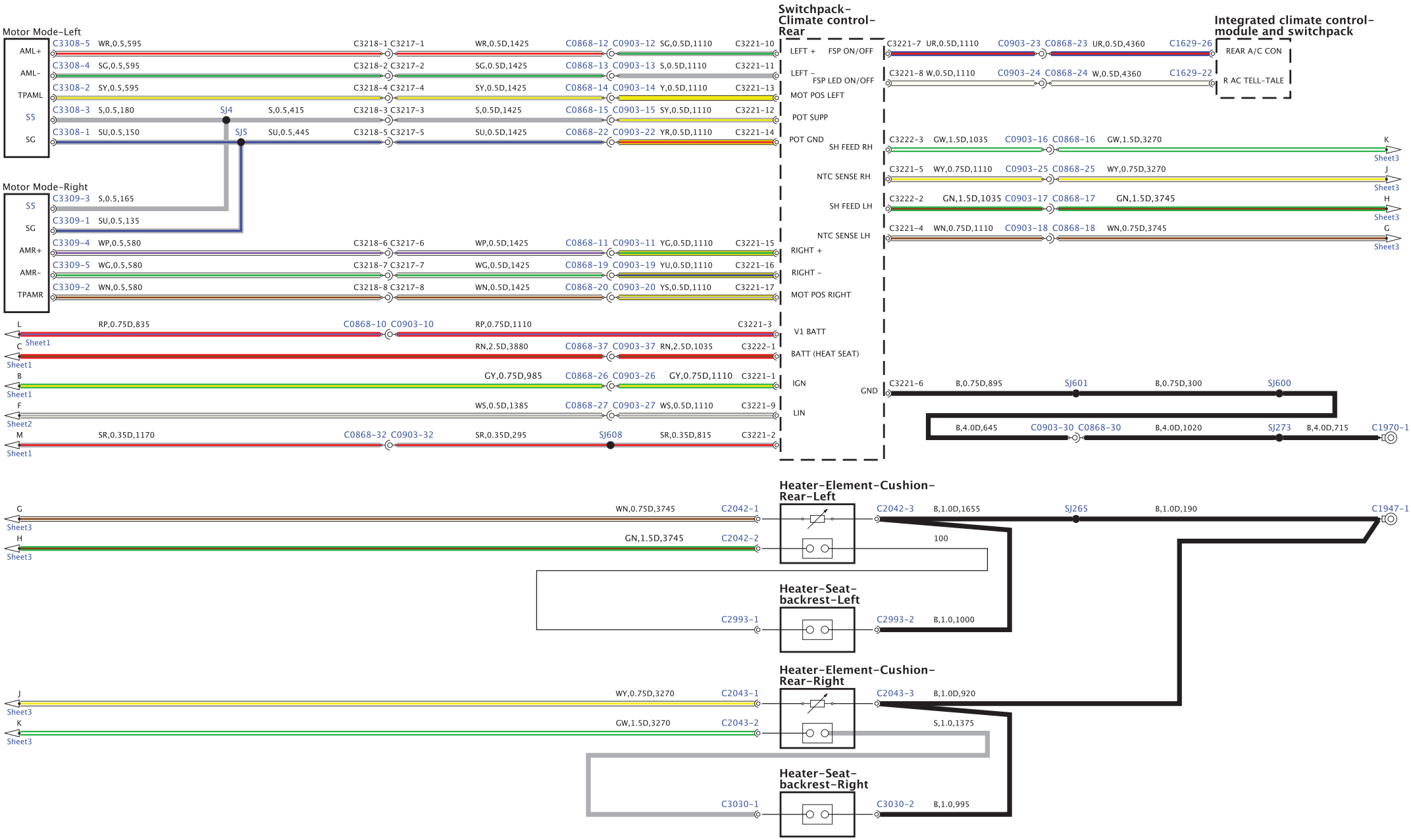
Motor Mode-Left
AML+
AML-
TPAML
S5
SG
C3308-5 WR,0.5,595
C3308-4 SG,0.5,595
C3308-2 SY,0.5,595
C3308-3 S,0.5,180
C3308-1 SU,0.5,150
SJ4
SJ5
S,0.5,415
SU,0.5,445
C3218-1 C3217-1 WR,0.5D,1425
C3218-2 C3217-2 SG,0.5D,1425
C3218-4 C3217-4 SY,0.5D,1425
C3218-3 C3217-3 S,0.5D,1425
C3218-5 C3217-5 SU,0.5D,1425
C0868-12 C0903-12 SG,0.5D,1110
C0868-13 C0903-13 S,0.5D,1110
C0868-14 C0903-14 Y,0.5D,1110
C0868-15 C0903-15 SY,0.5D,1110
C0868-22 C0903-22 YR,0.5D,1110
C3221-10
C3221-11
C3221-13
C3221-12
C3221-14
Motor Mode-Right
S5
SG
AMR+
AMR-
TPAMR
C3309-3 S,0.5,165
C3309-1 SU,0.5,135
C3309-4 WP,0.5,580
C3309-5 WG,0.5,580
C3309-2 WN,0.5,580
C3218-6 C3217-6 WP,0.5D,1425
C3218-7 C3217-7 WG,0.5D,1425
C3218-8 C3217-8 WN,0.5D,1425
C0868-11 C0903-11 YG,0.5D,1110
C0868-19 C0903-19 YU,0.5D,1110
C0868-20 C0903-20 YS,0.5D,1110
C3221-15
C3221-16
C3221-17
Switchpack-Climate control-Rear
LEFT +
LEFT -
MOT POS LEFT
POT SUPP
POT GND
RIGHT +
RIGHT -
MOT POS RIGHT
V1 BATT
BATT (HEAT SEAT)
IGN
LIN
FSP ON/OFF
FSP LED ON/OFF
SH FEED RH
NTC SENSE RH
SH FEED LH
NTC SENSE LH
GND
C3221-7 UR,0.5D,1110
C3221-8 W,0.5D,1110
C0903-23 C0868-23 UR,0.5D,4360
C0903-24 C0868-24 W,0.5D,4360
C1629-26
C1629-22
Integrated climate control-module and switchpack
REAR A/C CON
R AC TELL-TALE
C3222-3 GW,1.5D,1035
C0903-16 C0868-16 GW,1.5D,3270
C3221-5 WY,0.75D,1110
C0903-25 C0868-25 WY,0.75D,3270
C3222-2 GN,1.5D,1035
C0903-17 C0868-17 GN,1.5D,3745
C3221-4 WN,0.75D,1110
C0903-18 C0868-18 WN,0.75D,3745
Sheet3
L RP,0.75D,835
C0868-10 C0903-10 RP,0.75D,1110
C3221-3
C RN,2.5D,3880
C0868-37 C0903-37 RN,2.5D,1035
C3222-1
B GY,0.75D,985
C0868-26 C0903-26 GY,0.75D,1110
C3221-1
F WS,0.5D,1385
C0868-27 C0903-27 WS,0.5D,1110
C3221-9
M SR,0.35D,1170
C0868-32 C0903-32 SR,0.35D,295
SJ608
SR,0.35D,815
C3221-2
Sheet1
Sheet2
C3221-6 B,0.75D,895
SJ601
B,0.75D,300
SJ600
B,4.0D,645
C0903-30 C0868-30 B,4.0D,1020
SJ273
B,4.0D,715
C1970-1
Heater-Element-Cushion-Rear-Left
G WN,0.75D,3745 C2042-1
H GN,1.5D,3745 C2042-2
C2042-3 B,1.0D,1655
SJ265
B,1.0D,190
C1947-1
100
Heater-Seat-backrest-Left
C2993-1
C2993-2 B,1.0,1000
Heater-Element-Cushion-Rear-Right
J WY,0.75D,3270 C2043-1
K GW,1.5D,3270 C2043-2
C2043-3 B,1.0D,920
S,1.0,1375
Heater-Seat-backrest-Right
C3030-1
C3030-2 B,1.0,995

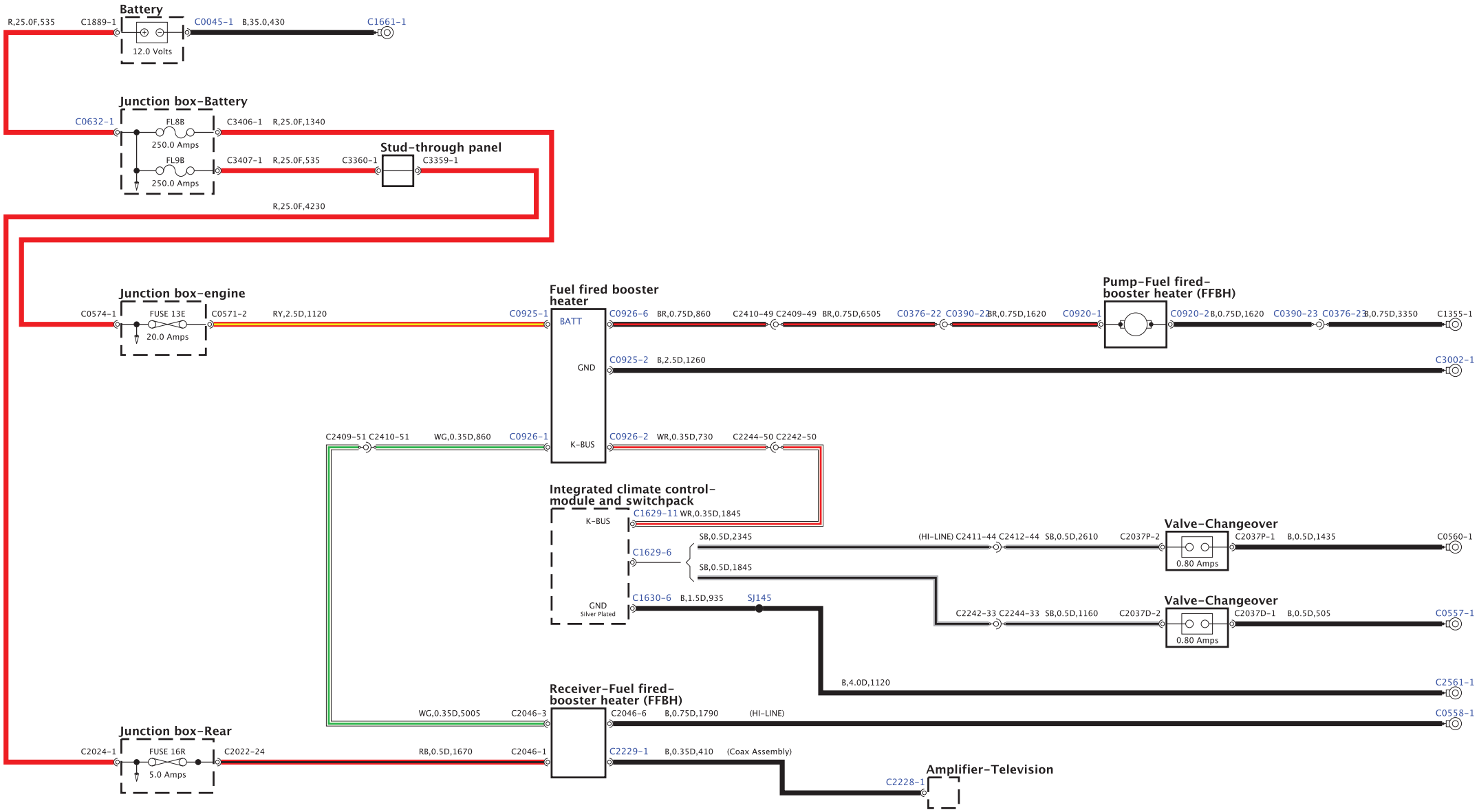
Battery
R,25.0F,535
C1889-1
C0045-1
B,35.0,430
C1661-1
12.0 Volts
Junction box-Battery
C0632-1
FL8B
250.0 Amps
C3406-1
R,25.0F,1340
FL9B
250.0 Amps
C3407-1
R,25.0F,535
C3360-1
C3359-1
Stud-through panel
R,25.0F,4230
Junction box-engine
C0574-1
FUSE 13E
20.0 Amps
C0571-2
RY,2.5D,1120
C0925-1
Fuel fired booster heater
BATT
GND
K-BUS
C0926-6
BR,0.75D,860
C2410-49
C2409-49
BR,0.75D,6505
C0376-22
C0390-22
BR,0.75D,1620
C0920-1
Pump-Fuel fired-booster heater (FFBH)
C0920-2
B,0.75D,1620
C0390-23
C0376-23
B,0.75D,3350
C1355-1
C0925-2
B,2.5D,1260
C3002-1
C2409-51
C2410-51
WG,0.35D,860
C0926-1
C0926-2
WR,0.35D,730
C2244-50
C2242-50
Integrated climate control-module and switchpack
C1629-11
WR,0.35D,1845
C1629-6
SB,0.5D,2345
SB,0.5D,1845
(HI-LINE)
C2411-44
C2412-44
SB,0.5D,2610
C2037P-2
Valve-Changeover
0.80 Amps
C2037P-1
B,0.5D,1435
C0560-1
GND
Silver Plated
C1630-6
B,1.5D,935
SJ145
C2242-33
C2244-33
SB,0.5D,1160
C2037D-2
Valve-Changeover
0.80 Amps
C2037D-1
B,0.5D,505
C0557-1
B,4.0D,1120
C2561-1
Receiver-Fuel fired-booster heater (FFBH)
WG,0.35D,5005
C2046-3
C2046-6
B,0.75D,1790
(HI-LINE)
C0558-1
Junction box-Rear
C2024-1
FUSE 16R
5.0 Amps
C2022-24
RB,0.5D,1670
C2046-1
C2229-1
B,0.35D,410
(Coax Assembly)
Amplifier-Television
C2228-1

BH42-70120-A-A-01-04-Service (L322-11MY-JOB1)

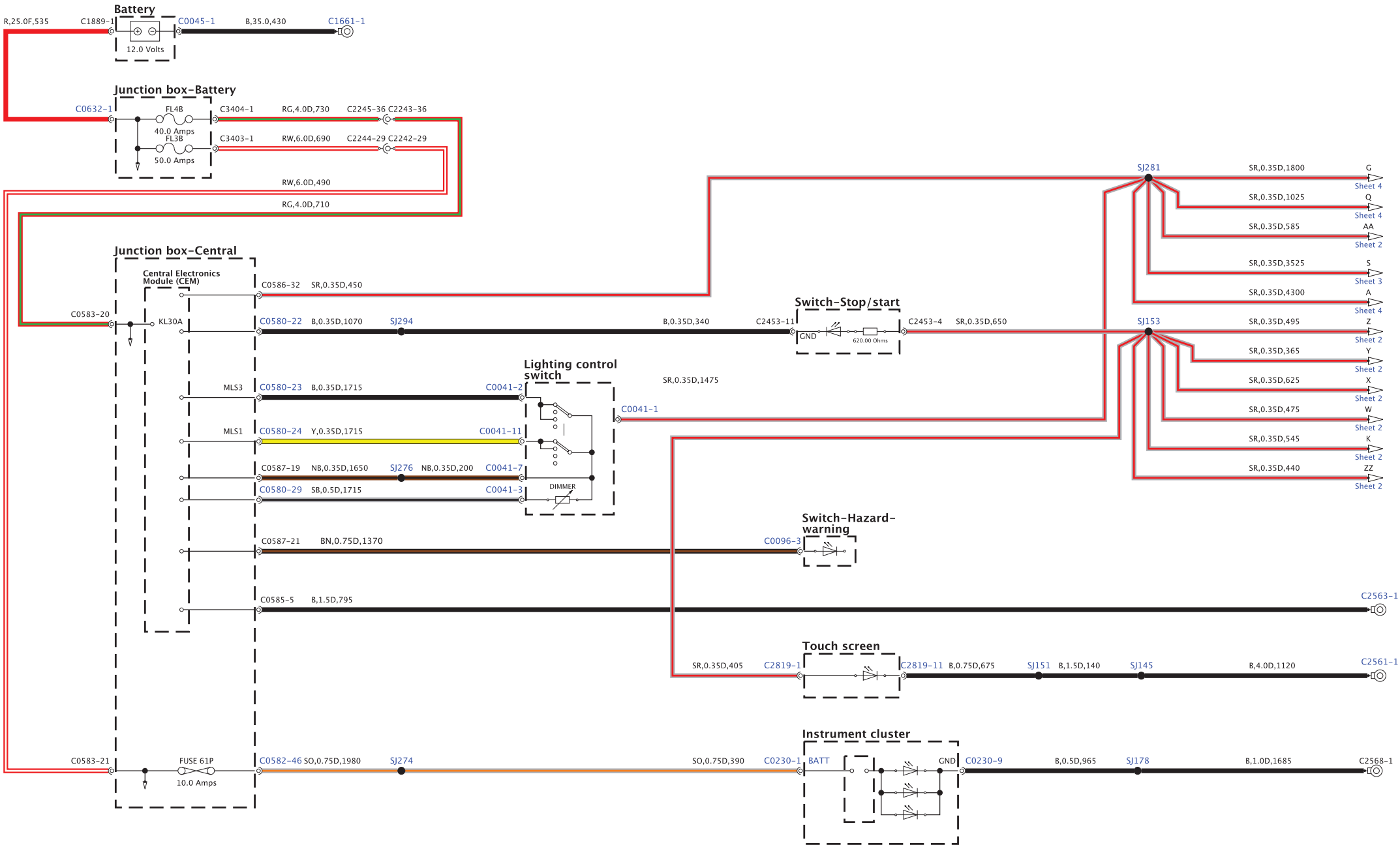

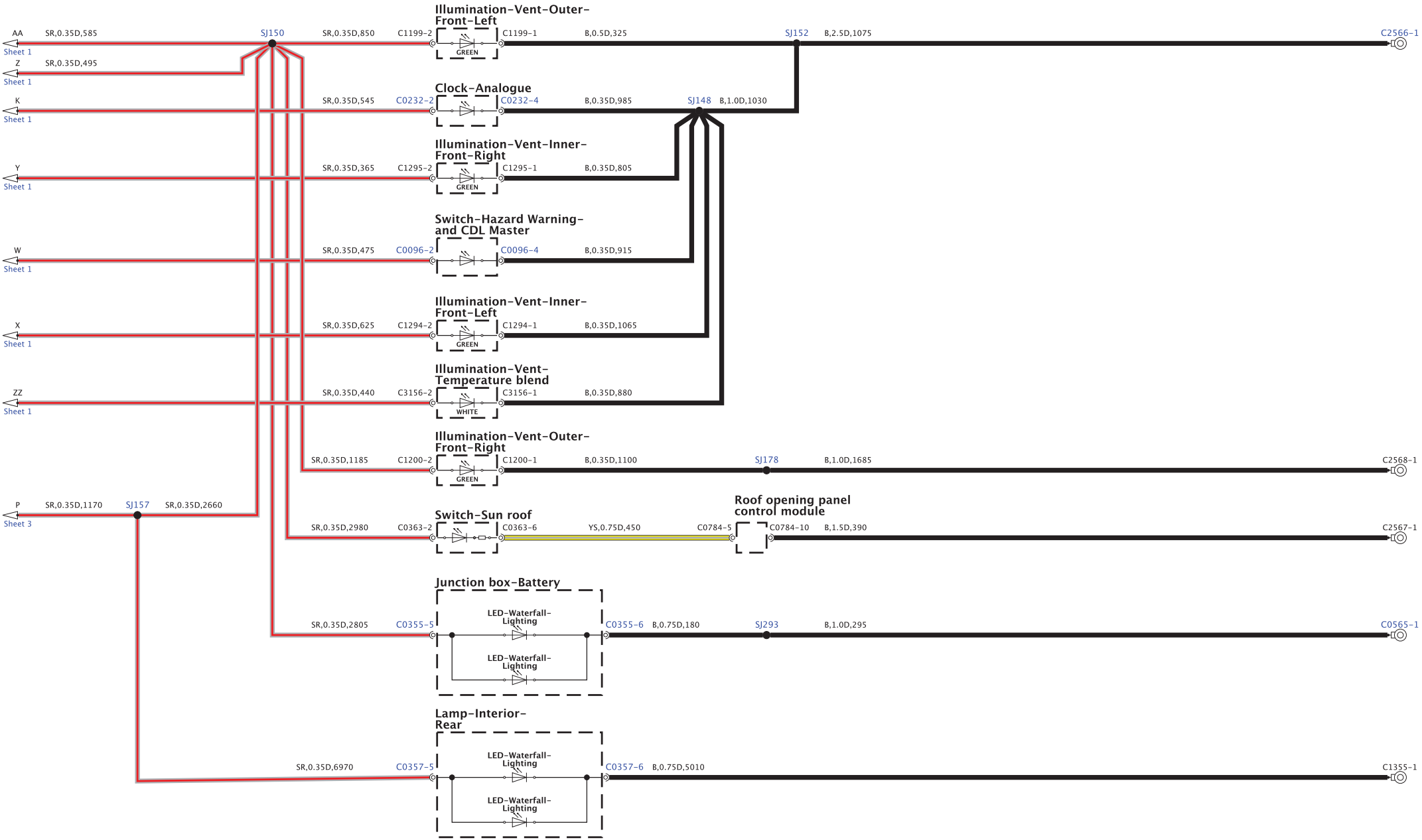
Illumination-Vent-Outer-Front-Left
AA
SR,0.35D,585
SJ150
SR,0.35D,850
C1199-2
GREEN
C1199-1
B,0.5D,325
SJ152
B,2.5D,1075
C2566-1
Sheet 1
Z
SR,0.35D,495
Sheet 1
Clock-Analogue
K
SR,0.35D,545
C0232-2
C0232-4
B,0.35D,985
SJ148
B,1.0D,1030
Sheet 1
Illumination-Vent-Inner-Front-Right
Y
SR,0.35D,365
C1295-2
GREEN
C1295-1
B,0.35D,805
Sheet 1
Switch-Hazard Warning-and CDL Master
W
SR,0.35D,475
C0096-2
C0096-4
B,0.35D,915
Sheet 1
Illumination-Vent-Inner-Front-Left
X
SR,0.35D,625
C1294-2
GREEN
C1294-1
B,0.35D,1065
Sheet 1
Illumination-Vent-Temperature blend
ZZ
SR,0.35D,440
C3156-2
WHITE
C3156-1
B,0.35D,880
Sheet 1
Illumination-Vent-Outer-Front-Right
SR,0.35D,1185
C1200-2
GREEN
C1200-1
B,0.35D,1100
SJ178
B,1.0D,1685
C2568-1
P
SR,0.35D,1170
SJ157
SR,0.35D,2660
Sheet 3
Roof opening panel control module
Switch-Sun roof
SR,0.35D,2980
C0363-2
C0363-6
YS,0.75D,450
C0784-5
C0784-10
B,1.5D,390
C2567-1
Junction box-Battery
SR,0.35D,2805
C0355-5
LED-Waterfall-Lighting
LED-Waterfall-Lighting
C0355-6
B,0.75D,180
SJ293
B,1.0D,295
C0565-1
Lamp-Interior-Rear
SR,0.35D,6970
C0357-5
LED-Waterfall-Lighting
LED-Waterfall-Lighting
C0357-6
B,0.75D,5010
C1355-1

8H42-70120-A-A-03-04-Service (L322-11MY-JO81)

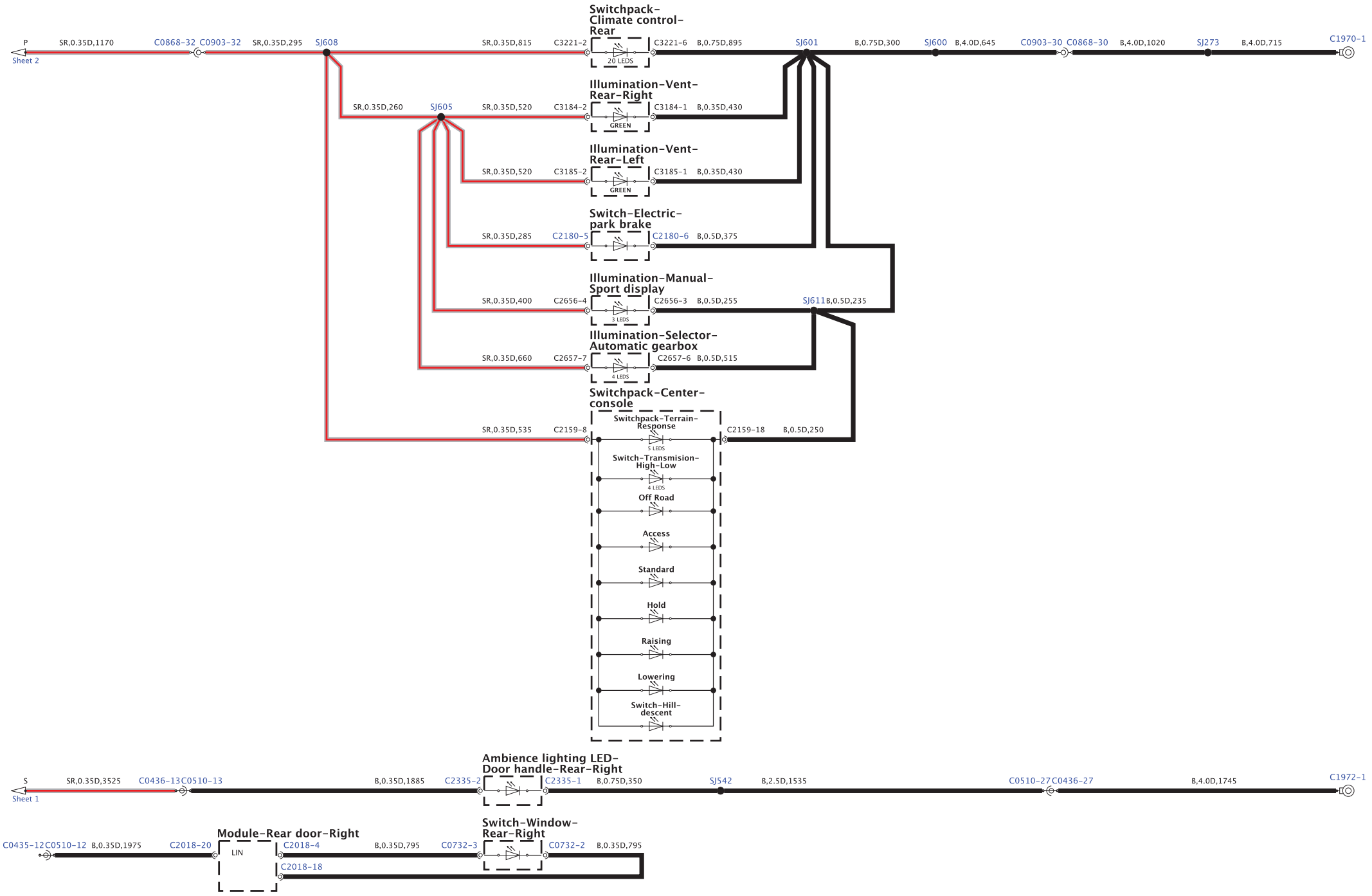

BH42-70120-A-A-04-04-Service (L322-11MY-JOB1)

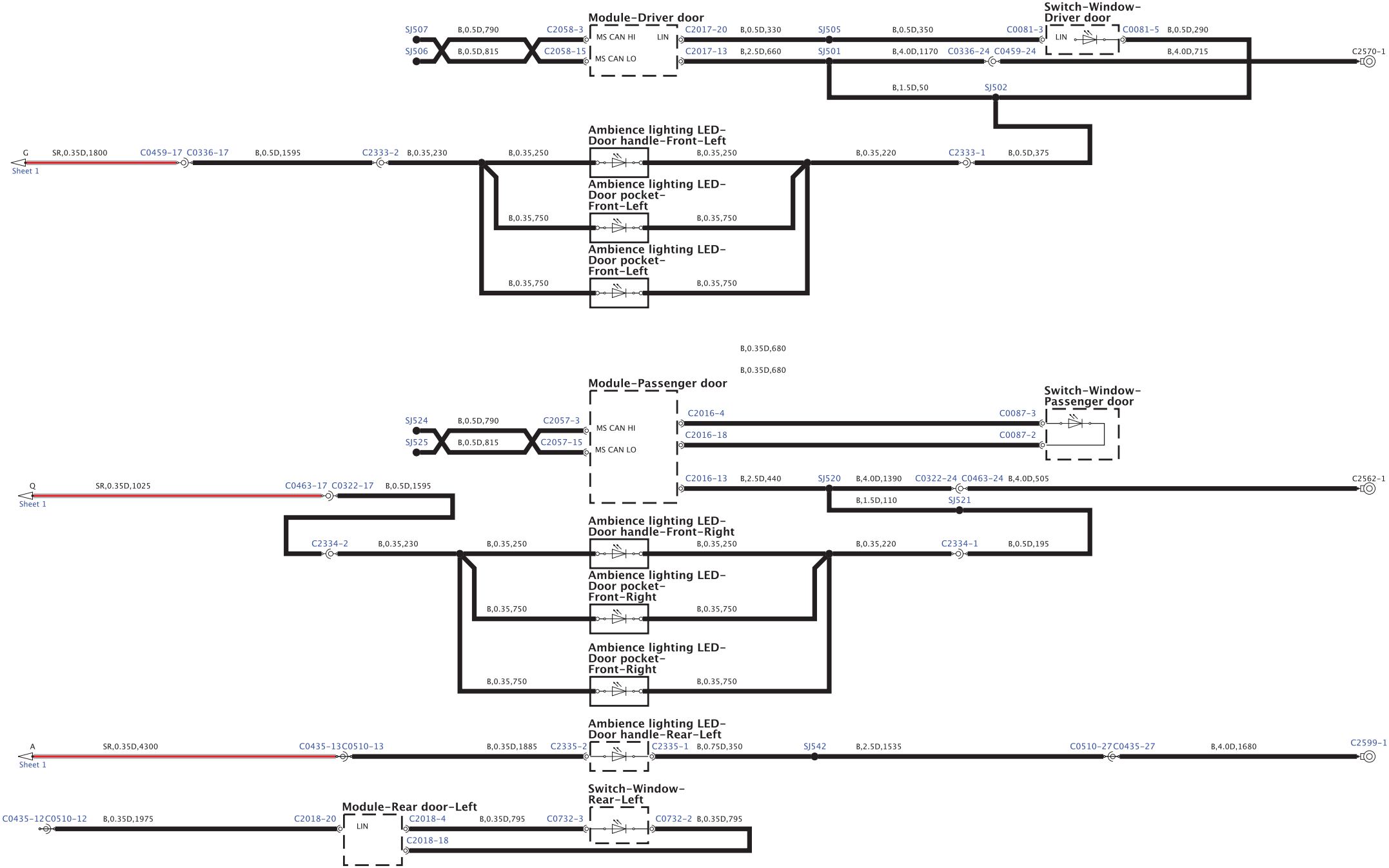

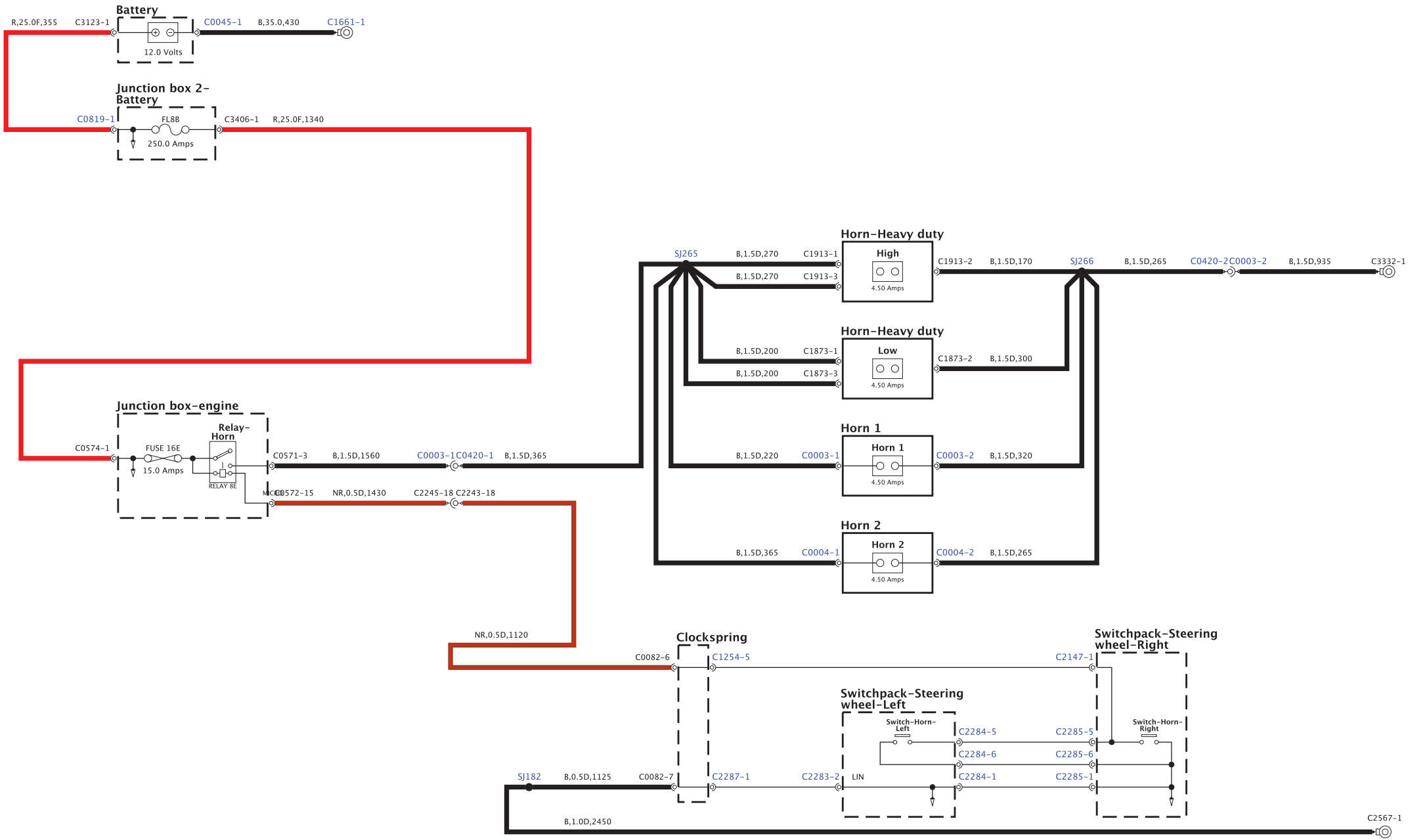
Battery
R,25.0F,355
C3123-1
C0045-1
B,35.0,430
C1661-1
12.0 Volts
Junction box 2-Battery
C0819-1
FL8B
C3406-1
R,25.0F,1340
250.0 Amps
Junction box-engine
C0574-1
FUSE 16E
15.0 Amps
Relay-Horn
RELAY 8E
C0571-3
B,1.5D,1560
C0003-1
C0420-1
B,1.5D,365
C0572-15
NR,0.5D,1430
C2245-18
C2243-18
SJ265
Horn-Heavy duty
High
B,1.5D,270
C1913-1
B,1.5D,270
C1913-3
4.50 Amps
C1913-2
B,1.5D,170
SJ266
B,1.5D,265
C0420-2
C0003-2
B,1.5D,935
C3332-1
Horn-Heavy duty
Low
B,1.5D,200
C1873-1
B,1.5D,200
C1873-3
4.50 Amps
C1873-2
B,1.5D,300
Horn 1
B,1.5D,220
C0003-1
Horn 1
4.50 Amps
C0003-2
B,1.5D,320
Horn 2
B,1.5D,365
C0004-1
Horn 2
4.50 Amps
C0004-2
B,1.5D,265
NR,0.5D,1120
Clockspring
C0082-6
C1254-5
Switchpack-Steering wheel-Right
C2147-1
Switchpack-Steering wheel-Left
Switch-Horn-Left
C2284-5
C2284-6
C2284-1
C2285-5
C2285-6
C2285-1
Switch-Horn-Right
SJ182
B,0.5D,1125
C0082-7
C2287-1
C2283-2
LIN
B,1.0D,2450
C2567-1

BH42-70274-A-A-01-01-Service (L322-11MY-JO81)

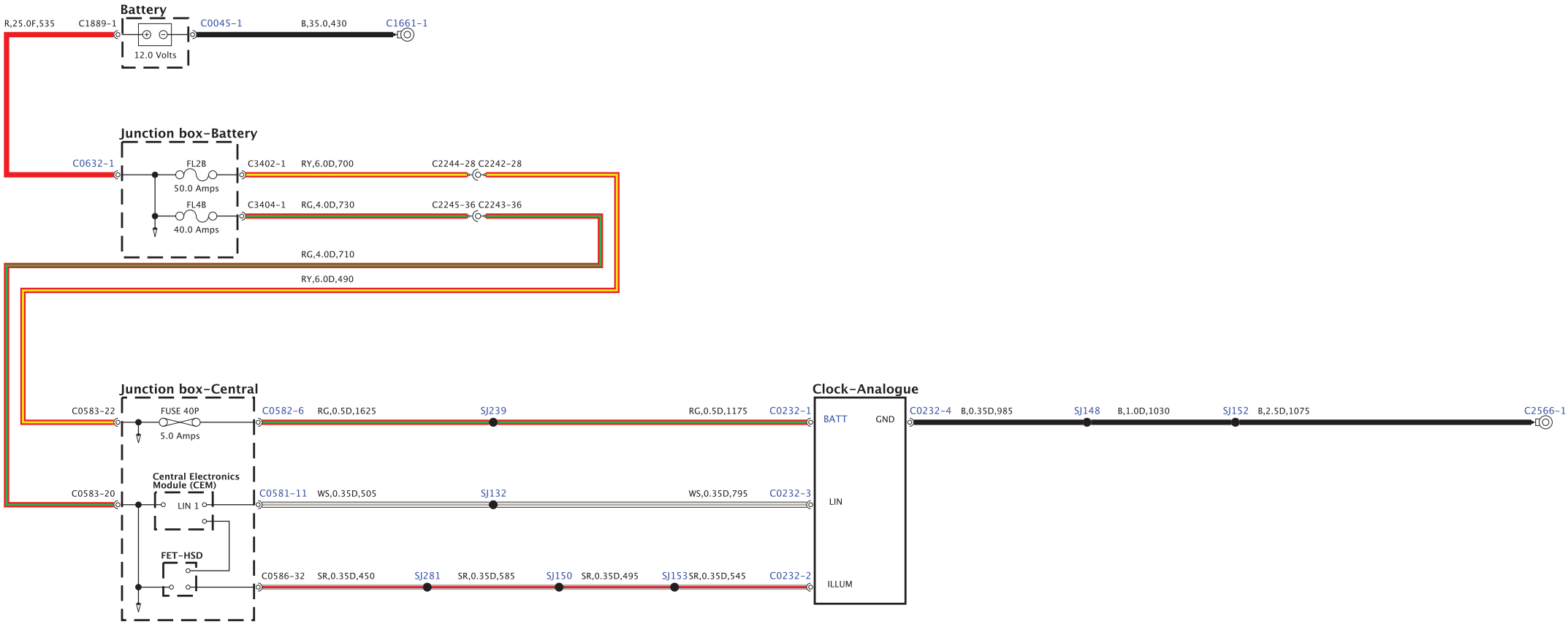

BH42-70210-A-A-01-02-Service (L322-11MY-J081)

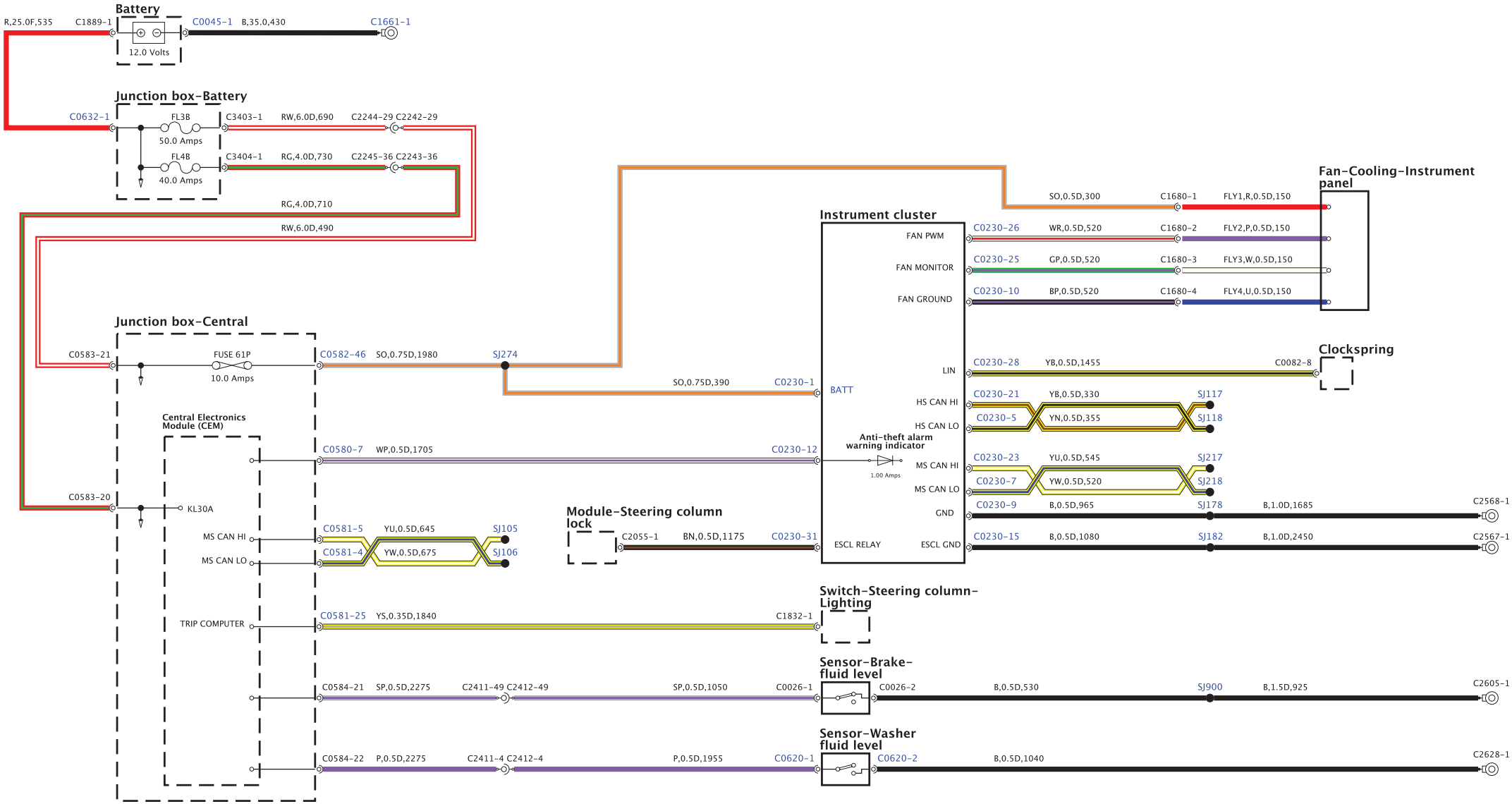

BH42-70210-A-A-02-02-Service (L322-11MY-JOB1)

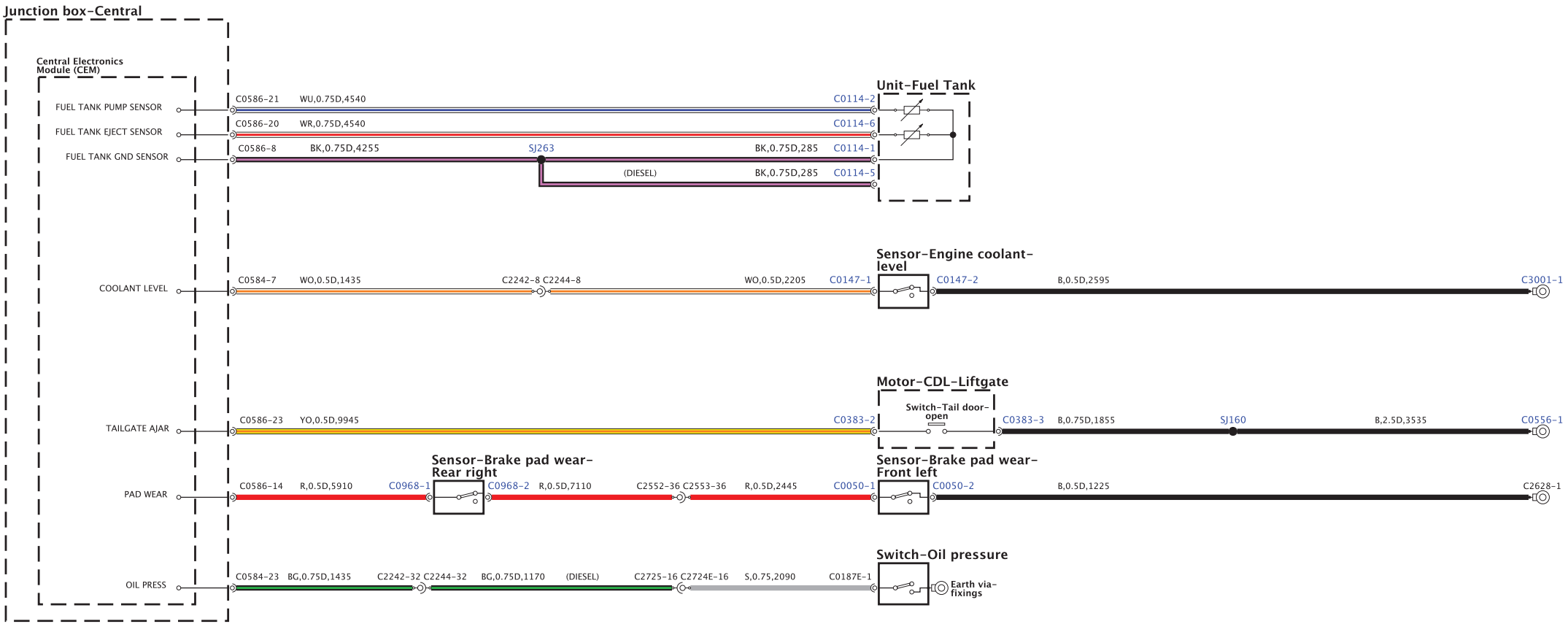

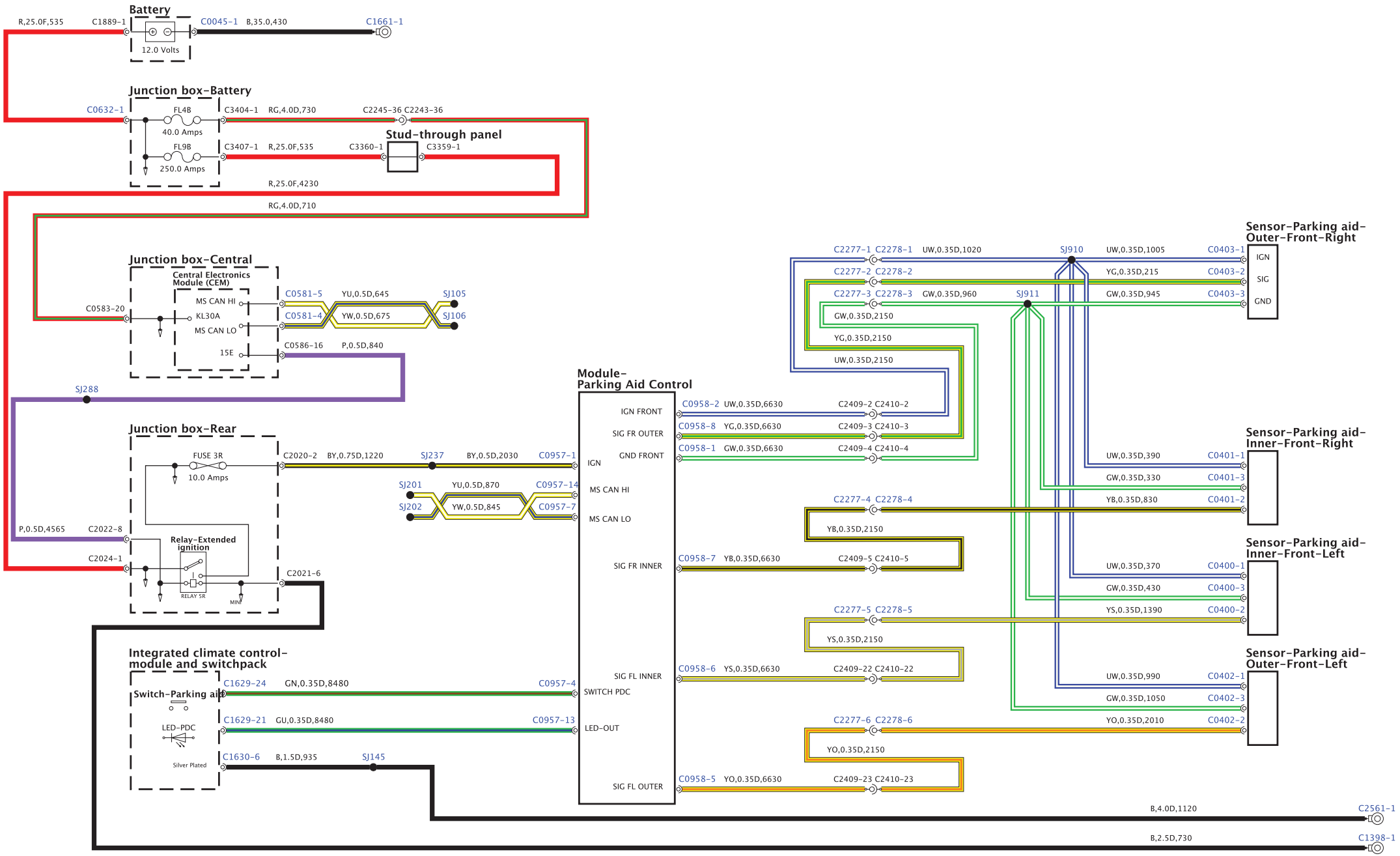
Battery
R,25.0F,535
C1889-1
C0045-1
B,35.0,430
C1661-1
12.0 Volts
Junction box-Battery
C0632-1
FL4B
40.0 Amps
C3404-1
RG,4.0D,730
C2245-36 C2243-36
FL9B
250.0 Amps
C3407-1
R,25.0F,535
C3360-1
C3359-1
Stud-through panel
R,25.0F,4230
RG,4.0D,710
Junction box-Central
Central Electronics Module (CEM)
C0583-20
MS CAN HI
KL30A
MS CAN LO
15E
C0581-5
YU,0.5D,645
SJ105
C0581-4
YW,0.5D,675
SJ106
C0586-16
P,0.5D,840
SJ288
Junction box-Rear
FUSE 3R
10.0 Amps
C2020-2
BY,0.75D,1220
SJ237
BY,0.5D,2030
C0957-1
SJ201
YU,0.5D,870
C0957-14
SJ202
YW,0.5D,845
C0957-7
P,0.5D,4565
C2022-8
Relay-Extended ignition
C2024-1
RELAY 5R
MINI
C2021-6
Integrated climate control-module and switchpack
Switch-Parking aid
LED-PDC
Silver Plated
C1629-24
GN,0.35D,8480
C0957-4
C1629-21
GU,0.35D,8480
C0957-13
C1630-6
B,1.5D,935
SJ145
Module-Parking Aid Control
IGN FRONT
SIG FR OUTER
GND FRONT
IGN
MS CAN HI
MS CAN LO
SIG FR INNER
SIG FL INNER
SWITCH PDC
LED-OUT
SIG FL OUTER
C0958-2
UW,0.35D,6630
C2409-2 C2410-2
C0958-8
YG,0.35D,6630
C2409-3 C2410-3
C0958-1
GW,0.35D,6630
C2409-4 C2410-4
C0958-7
YB,0.35D,6630
C2409-5 C2410-5
C0958-6
YS,0.35D,6630
C2409-22 C2410-22
C0958-5
YO,0.35D,6630
C2409-23 C2410-23
C2277-1 C2278-1
UW,0.35D,1020
C2277-2 C2278-2
C2277-3 C2278-3
GW,0.35D,960
GW,0.35D,2150
YG,0.35D,2150
UW,0.35D,2150
C2277-4 C2278-4
YB,0.35D,2150
C2277-5 C2278-5
YS,0.35D,2150
C2277-6 C2278-6
YO,0.35D,2150
SJ910
SJ911
UW,0.35D,1005
C0403-1
YG,0.35D,215
C0403-2
GW,0.35D,945
C0403-3
Sensor-Parking aid-Outer-Front-Right
IGN
SIG
GND
UW,0.35D,390
C0401-1
GW,0.35D,330
C0401-3
YB,0.35D,830
C0401-2
Sensor-Parking aid-Inner-Front-Right
UW,0.35D,370
C0400-1
GW,0.35D,430
C0400-3
YS,0.35D,1390
C0400-2
Sensor-Parking aid-Inner-Front-Left
UW,0.35D,990
C0402-1
GW,0.35D,1050
C0402-3
YO,0.35D,2010
C0402-2
Sensor-Parking aid-Outer-Front-Left
B,4.0D,1120
C2561-1
B,2.5D,730
C1398-1

BH4Z-70481-A-A-02-02-Service (L322-11MY-JOB1)

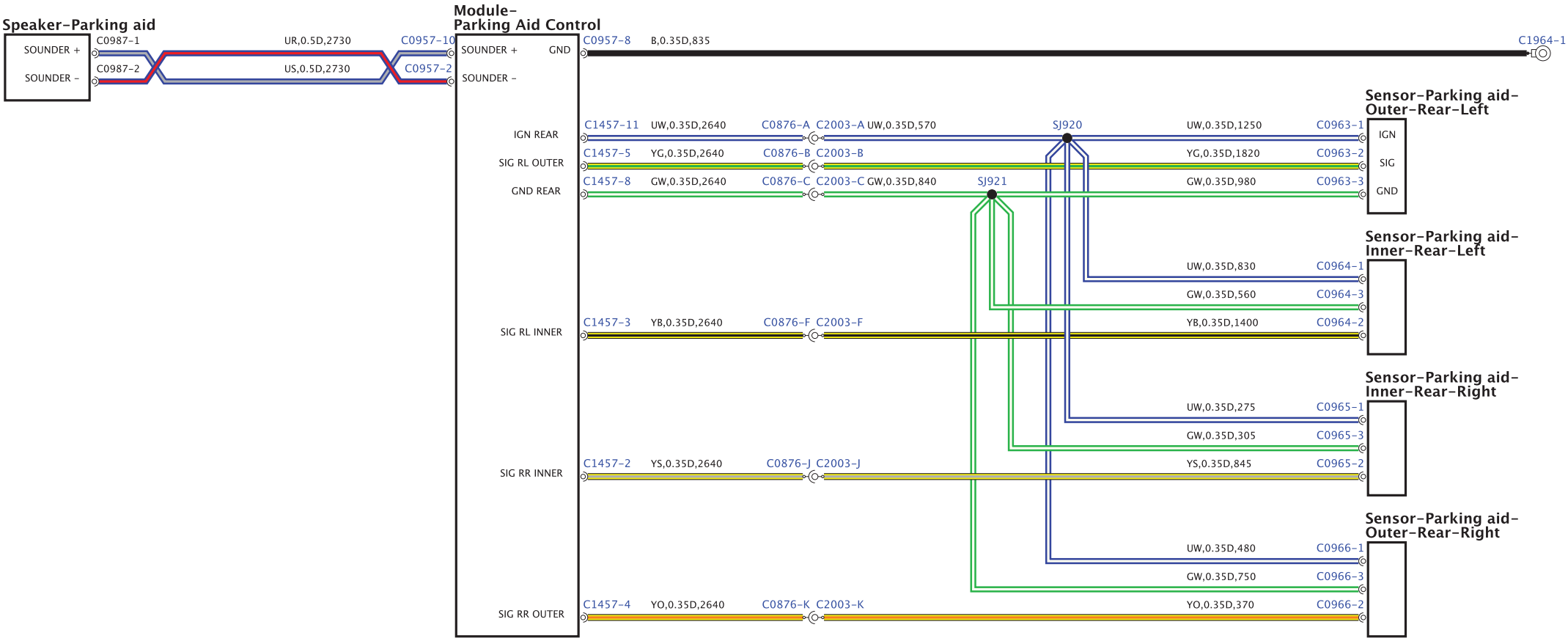

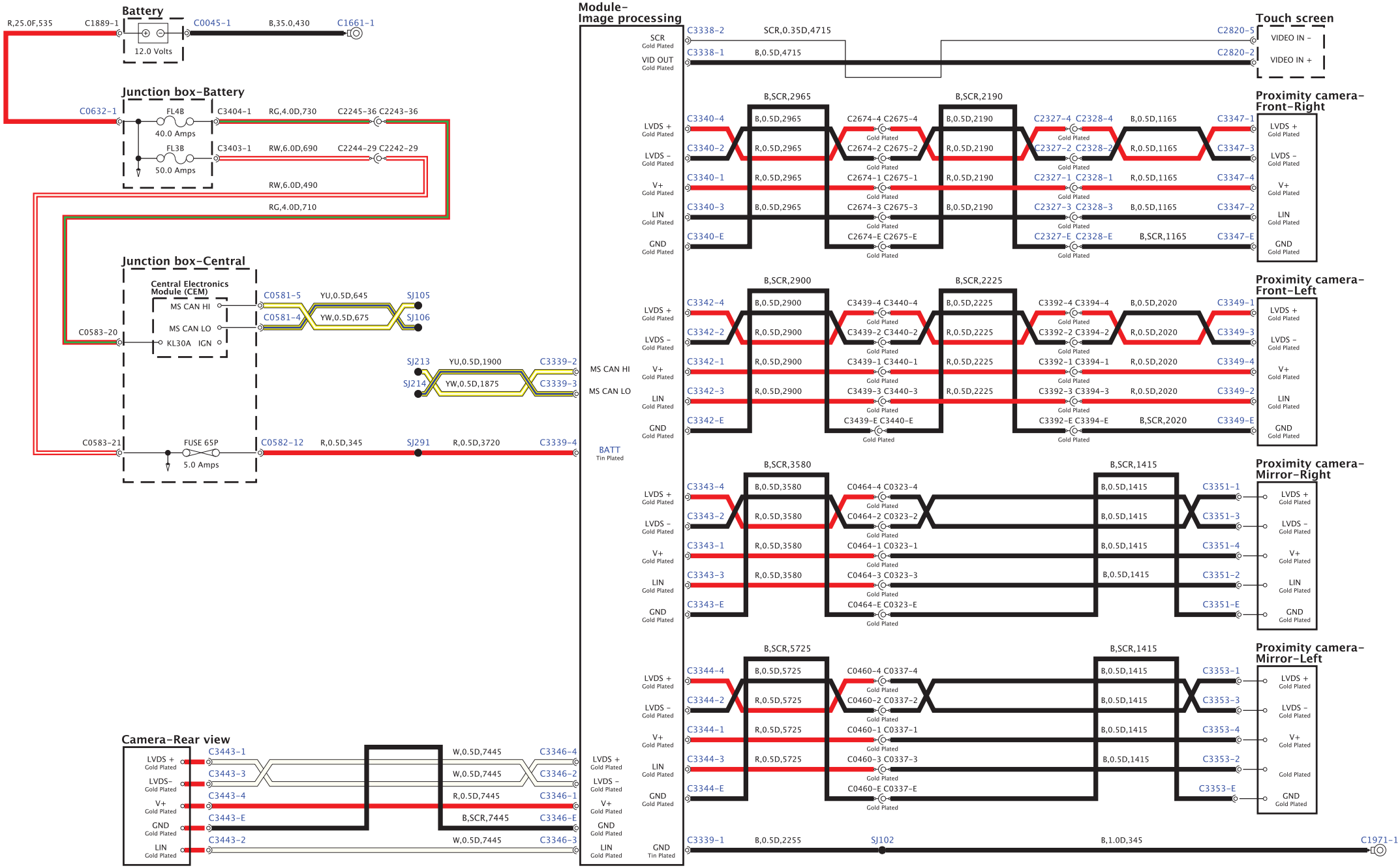
Battery
R,25.0F,535
C1889-1
C0045-1
B,35.0,430
C1661-1
12.0 Volts
Junction box-Battery
C0632-1
FL4B
40.0 Amps
C3404-1
RG,4.0D,730
C2245-36 C2243-36
FL3B
50.0 Amps
C3403-1
RW,6.0D,690
C2244-29 C2242-29
RW,6.0D,490
RG,4.0D,710
Junction box-Central
Central Electronics Module (CEM)
MS CAN HI
MS CAN LO
KL30A
IGN
C0583-20
C0581-5
YU,0.5D,645
SJ105
C0581-4
YW,0.5D,675
SJ106
SJ213
YU,0.5D,1900
C3339-2
SJ214
YW,0.5D,1875
C3339-3
C0583-21
FUSE 65P
5.0 Amps
C0582-12
R,0.5D,345
SJ291
R,0.5D,3720
C3339-4
Module-Image processing
SCR
Gold Plated
VID OUT
C3338-2
SCR,0.35D,4715
C3338-1
B,0.5D,4715
Touch screen
C2820-5
VIDEO IN -
C2820-2
VIDEO IN +
Proximity camera-Front-Right
B,SCR,2965
B,SCR,2190
LVDS +
LVDS -
V+
LIN
GND
C3340-4
C3340-2
C3340-1
C3340-3
C3340-E
B,0.5D,2965
R,0.5D,2965
B,SCR,1165
C2674-4 C2675-4
C2674-2 C2675-2
C2674-1 C2675-1
C2674-3 C2675-3
C2674-E C2675-E
B,0.5D,2190
R,0.5D,2190
C2327-4 C2328-4
C2327-2 C2328-2
C2327-1 C2328-1
C2327-3 C2328-3
C2327-E C2328-E
B,0.5D,1165
R,0.5D,1165
C3347-1
C3347-3
C3347-4
C3347-2
C3347-E
Proximity camera-Front-Left
B,SCR,2900
B,SCR,2225
C3342-4
C3342-2
C3342-1
C3342-3
C3342-E
B,0.5D,2900
R,0.5D,2900
C3439-4 C3440-4
C3439-2 C3440-2
C3439-1 C3440-1
C3439-3 C3440-3
C3439-E C3440-E
B,0.5D,2225
R,0.5D,2225
C3392-4 C3394-4
C3392-2 C3394-2
C3392-1 C3394-1
C3392-3 C3394-3
C3392-E C3394-E
B,0.5D,2020
R,0.5D,2020
C3349-1
C3349-3
C3349-4
C3349-2
C3349-E
MS CAN HI
MS CAN LO
BATT
Tin Plated
Proximity camera-Mirror-Right
B,SCR,3580
B,SCR,1415
C3343-4
C3343-2
C3343-1
C3343-3
C3343-E
B,0.5D,3580
R,0.5D,3580
C0464-4 C0323-4
C0464-2 C0323-2
C0464-1 C0323-1
C0464-3 C0323-3
C0464-E C0323-E
B,0.5D,1415
C3351-1
C3351-3
C3351-4
C3351-2
C3351-E
Proximity camera-Mirror-Left
B,SCR,5725
B,SCR,1415
C3344-4
C3344-2
C3344-1
C3344-3
C3344-E
B,0.5D,5725
R,0.5D,5725
C0460-4 C0337-4
C0460-2 C0337-2
C0460-1 C0337-1
C0460-3 C0337-3
C0460-E C0337-E
B,0.5D,1415
C3353-1
C3353-3
C3353-4
C3353-2
C3353-E
Camera-Rear view
C3443-1
C3443-3
C3443-4
C3443-E
C3443-2
W,0.5D,7445
R,0.5D,7445
B,SCR,7445
C3346-4
C3346-2
C3346-1
C3346-E
C3346-3
C3339-1
B,0.5D,2255
SJ102
B,1.0D,345
C1971-1

BH42-70483-C-A-01-01-Service (L322-11MY-J081)

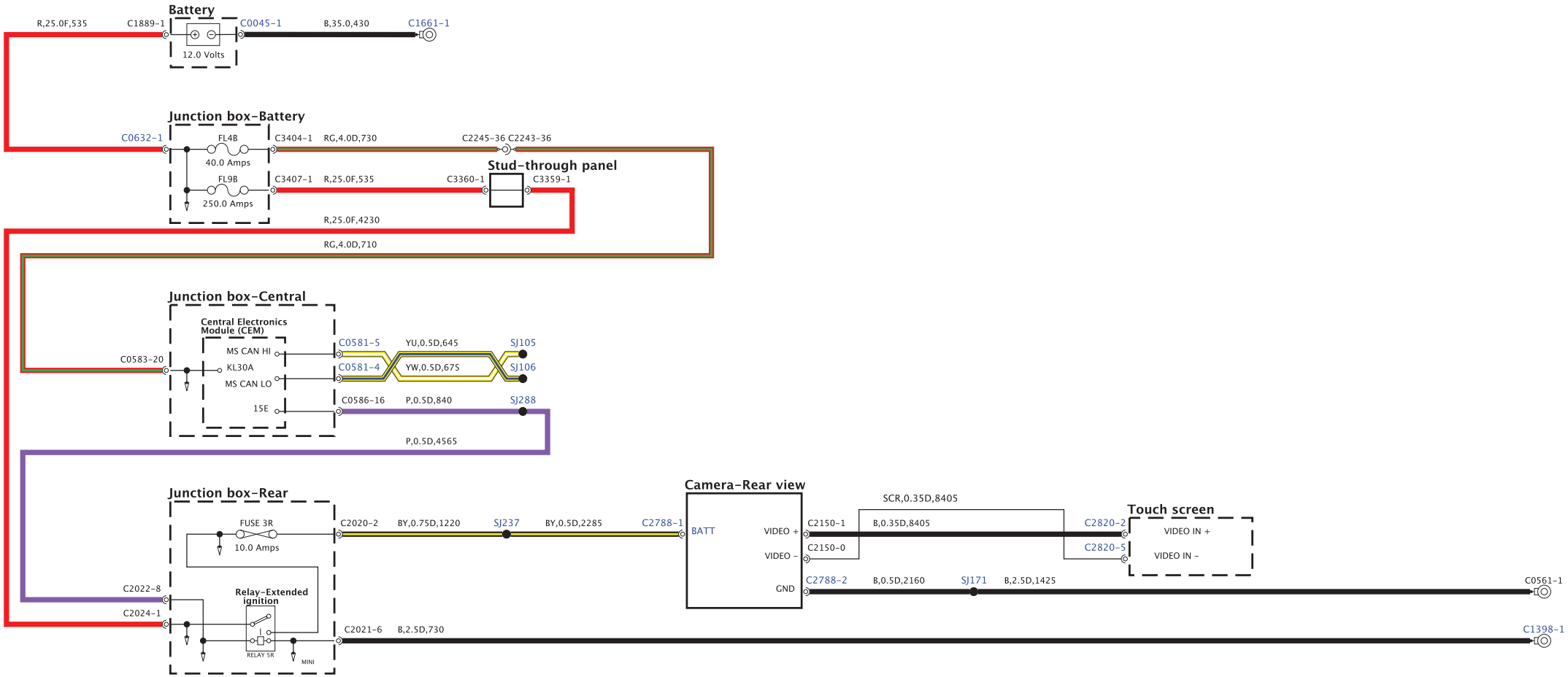

BH42-70010-B-A-01-05-Service (L322-11MY-JO81)

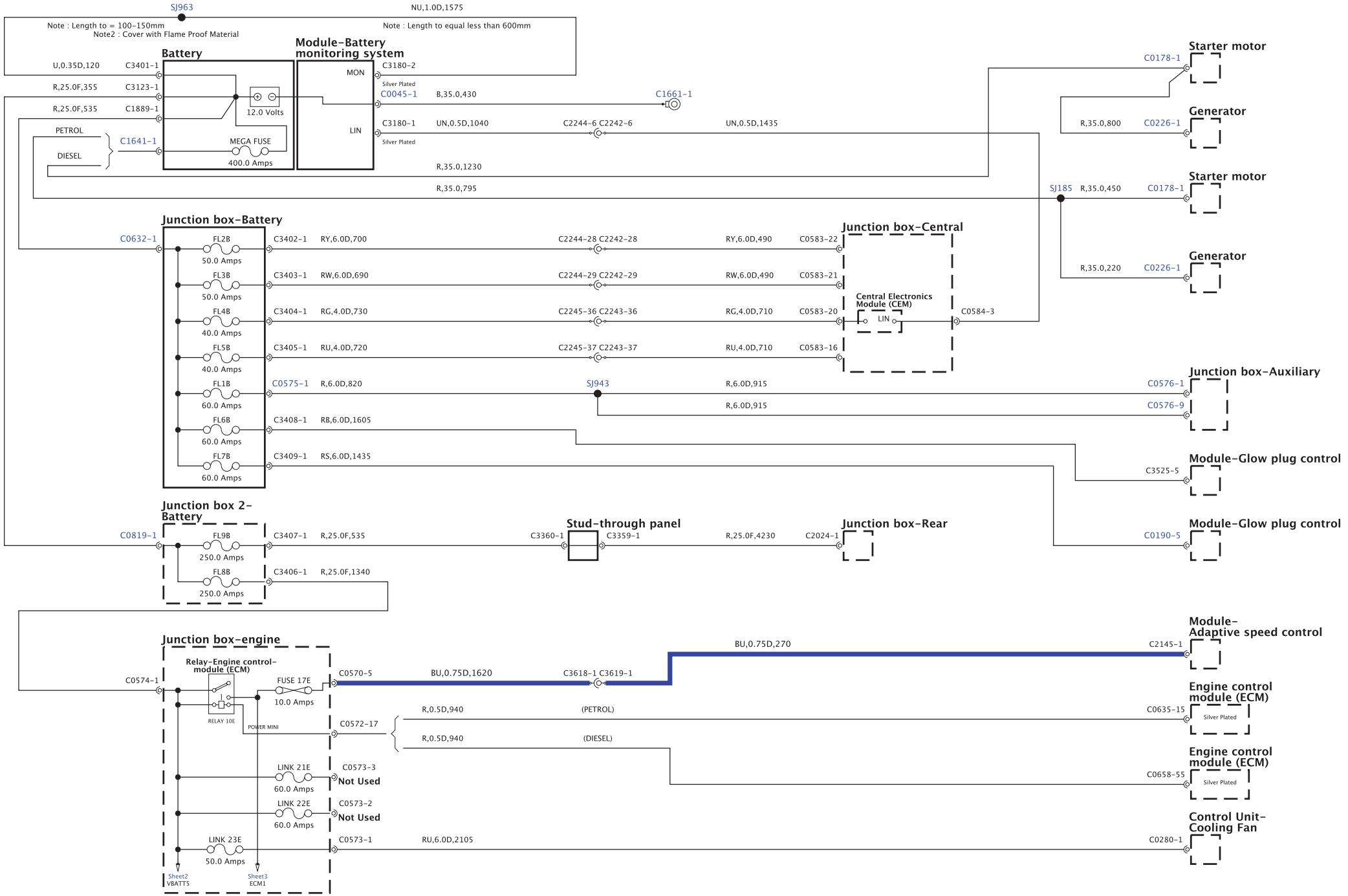

BH42-70010-B-A-02-05-Service (L322-11MY-JOB1)

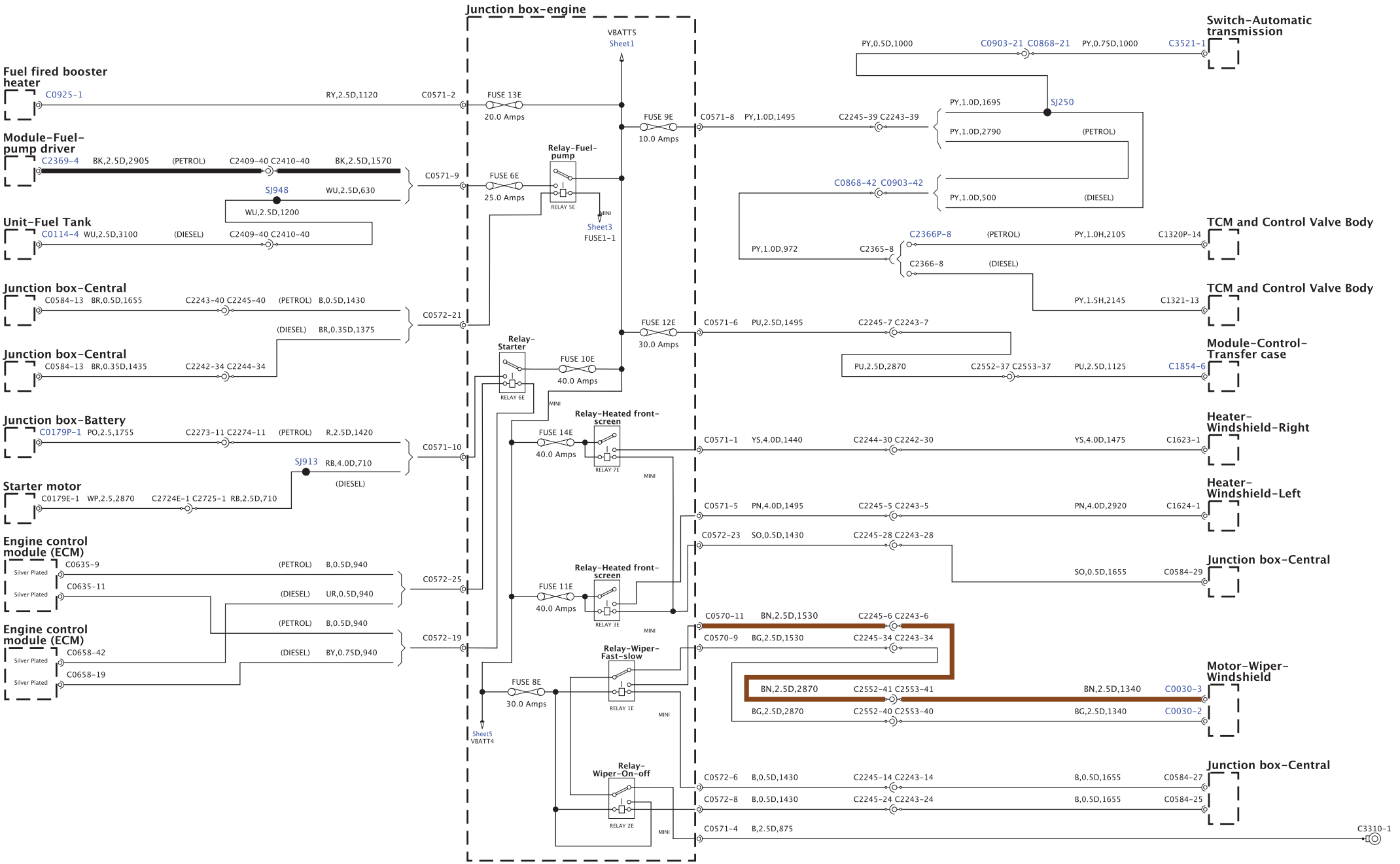

BH42-70010-B-A-03-05-Service (L322-11MY-JOB1)

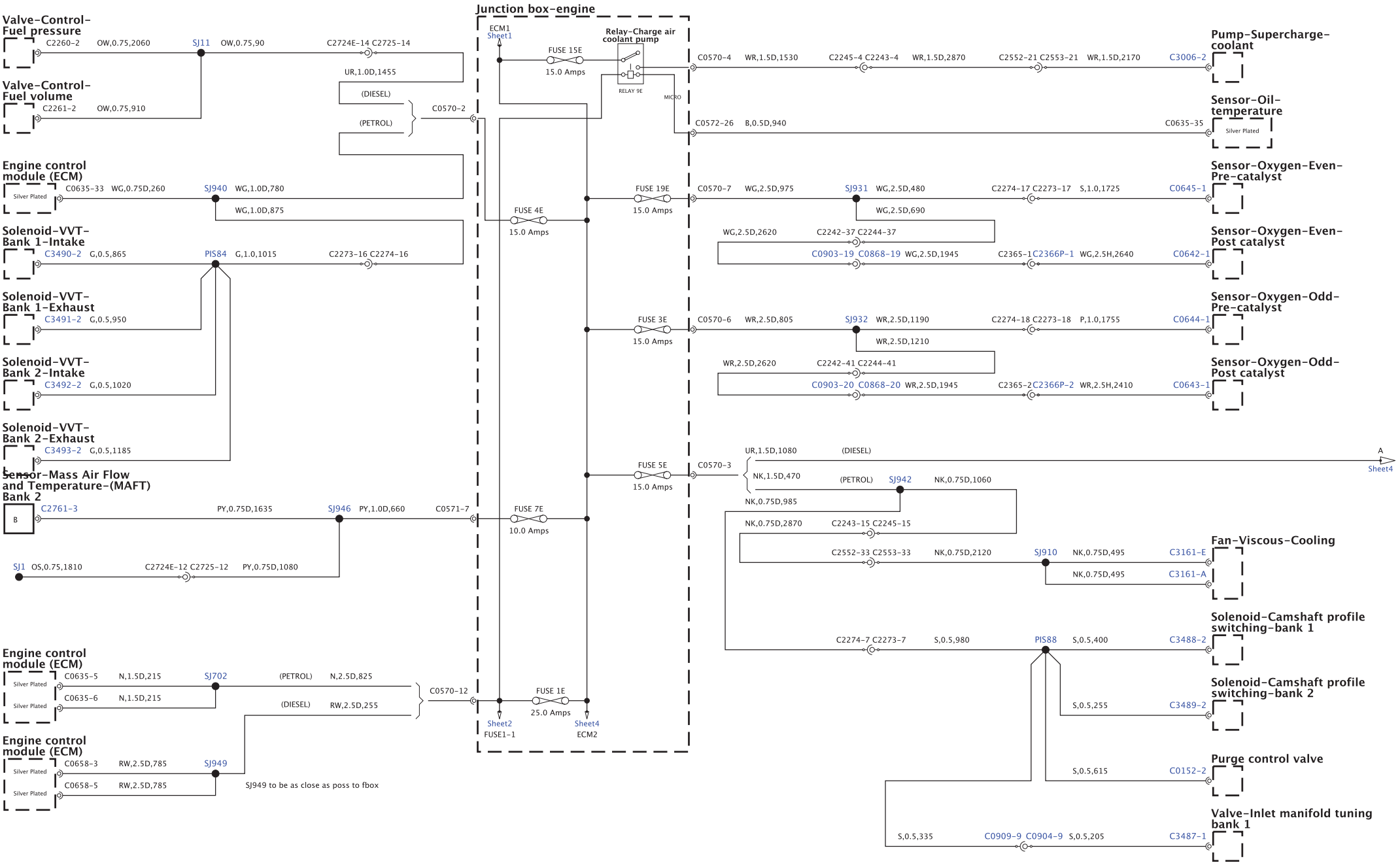

BH42-70010-B-A-04-05-Service (L322-11MY-JO81)

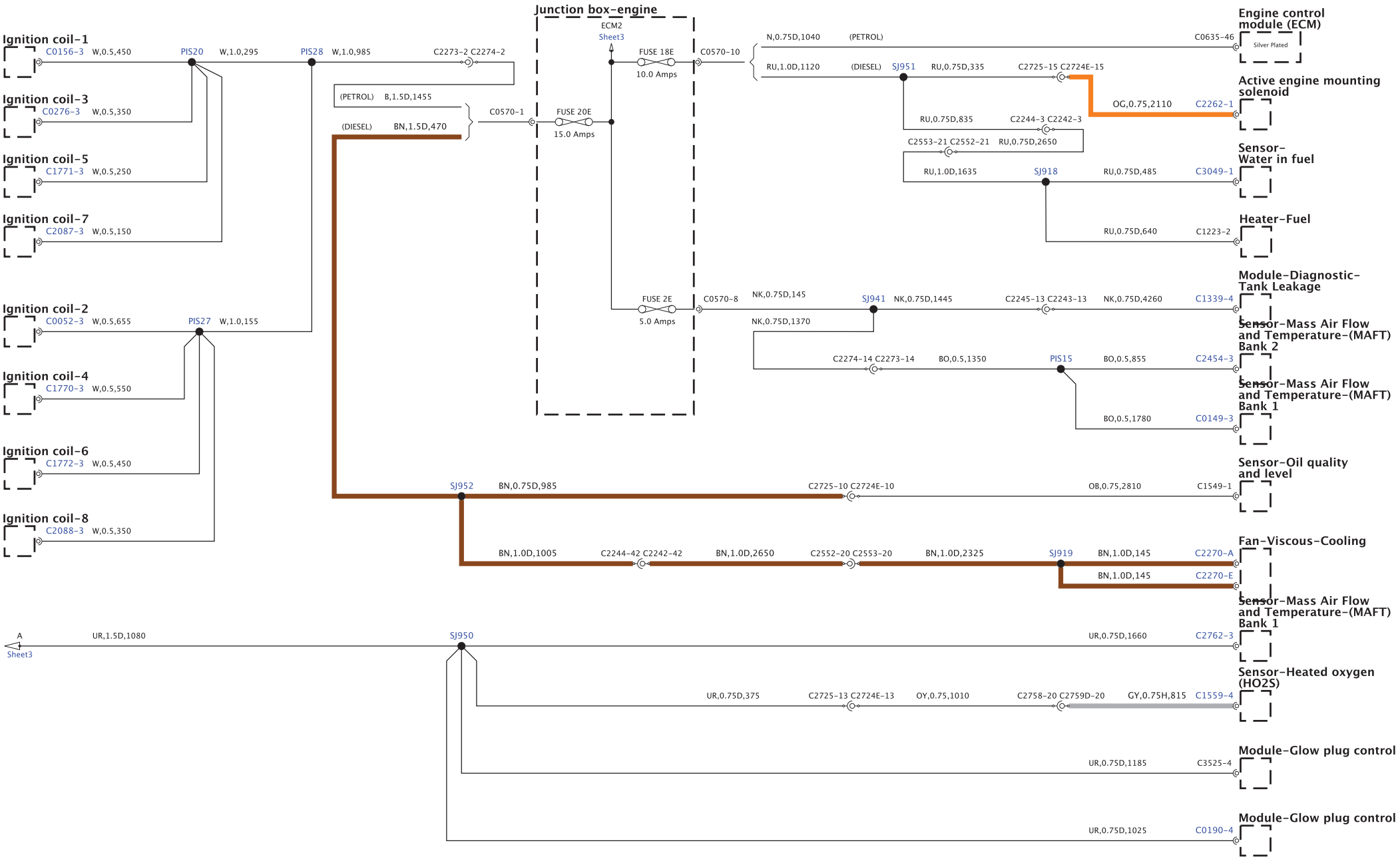

BH42-70010-B-A-05-05-Service (L322-11MY-JOB1)

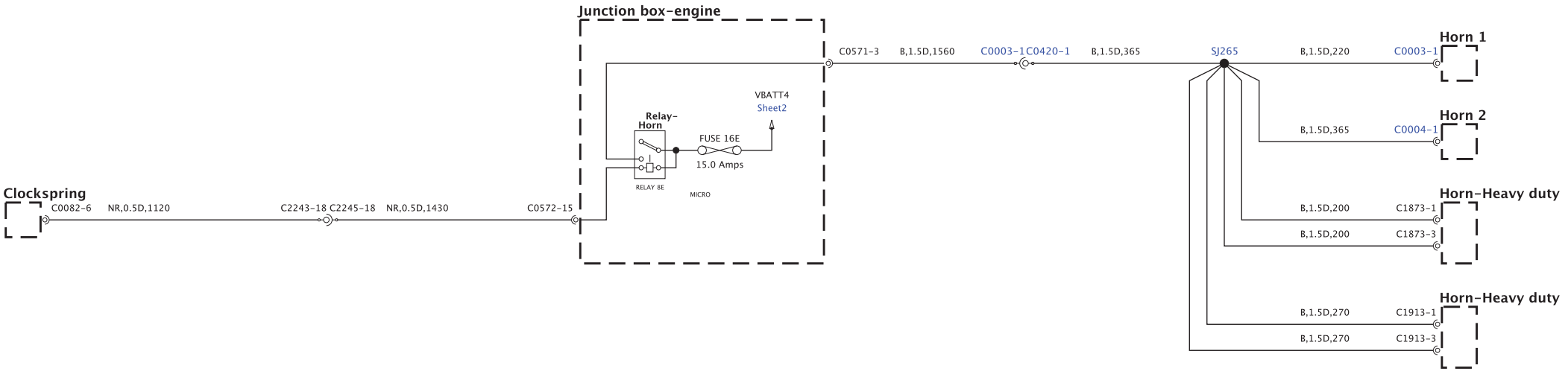

BH42-70010-A-A-01-02-Service (L322-11MY-J081)

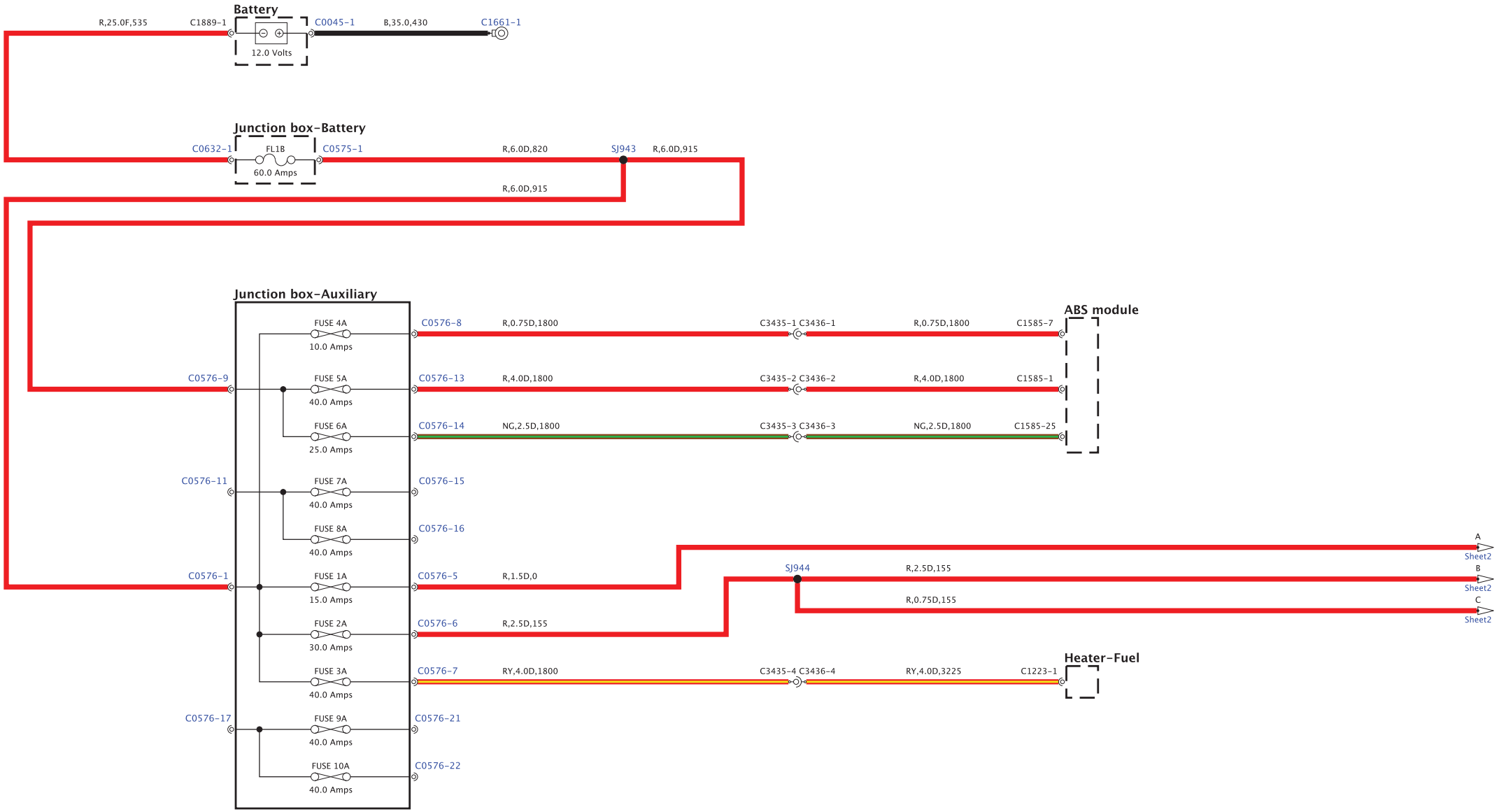

BH42-70010-A-A-02-02-Service (L3Z2-11MY-JO83)

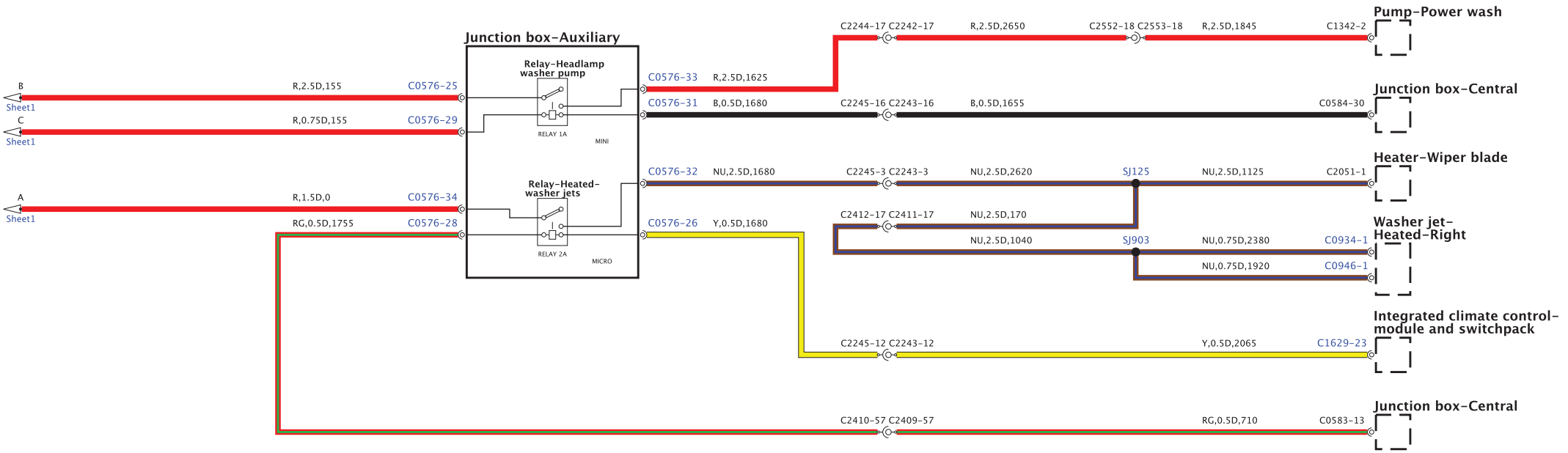

BH42-70010-D-A-01-13-Service (L322-11MY-JO81)

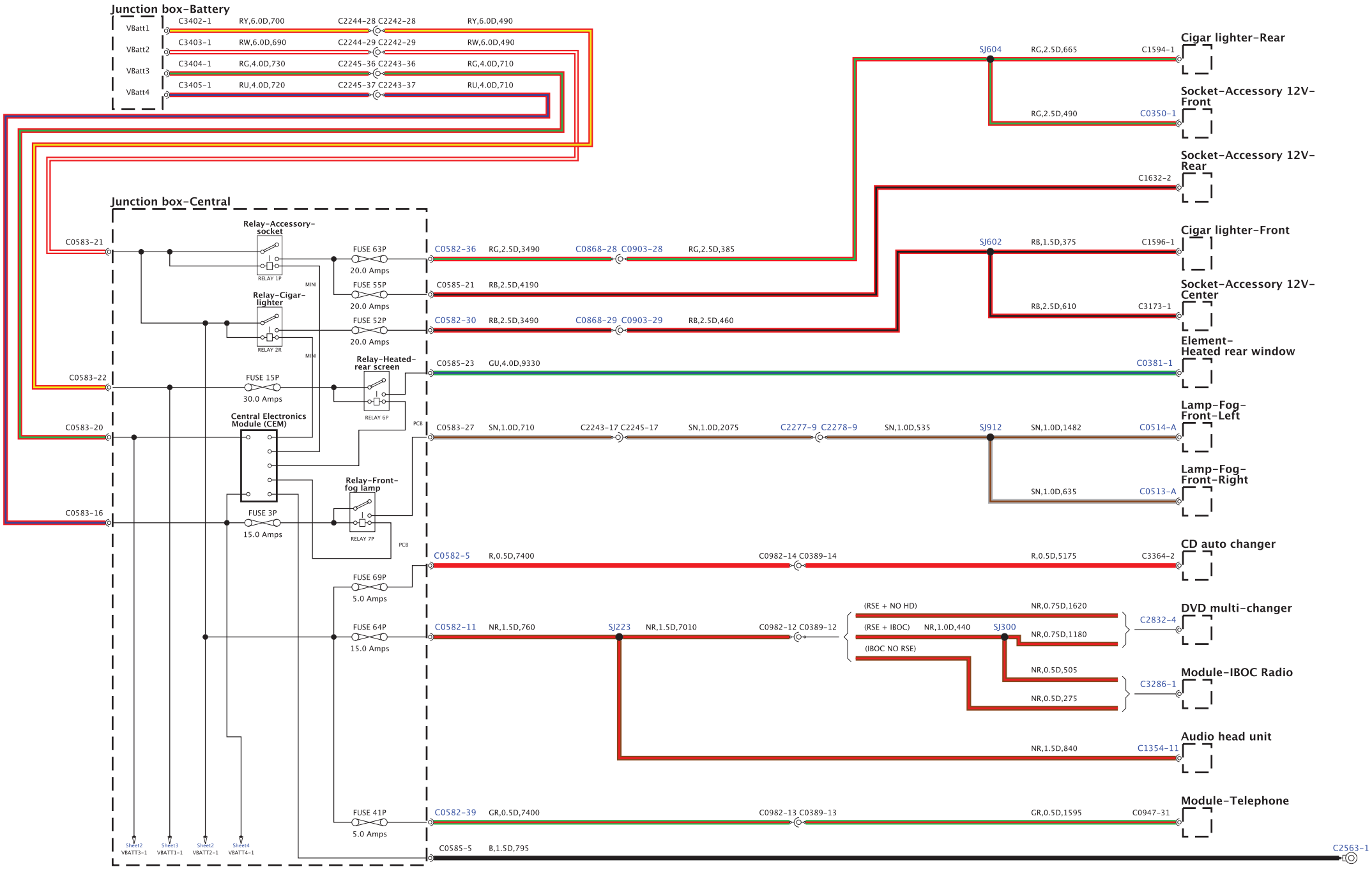

BH42-70010-D-A-02-13-Service (L322-11MY-JOB1)

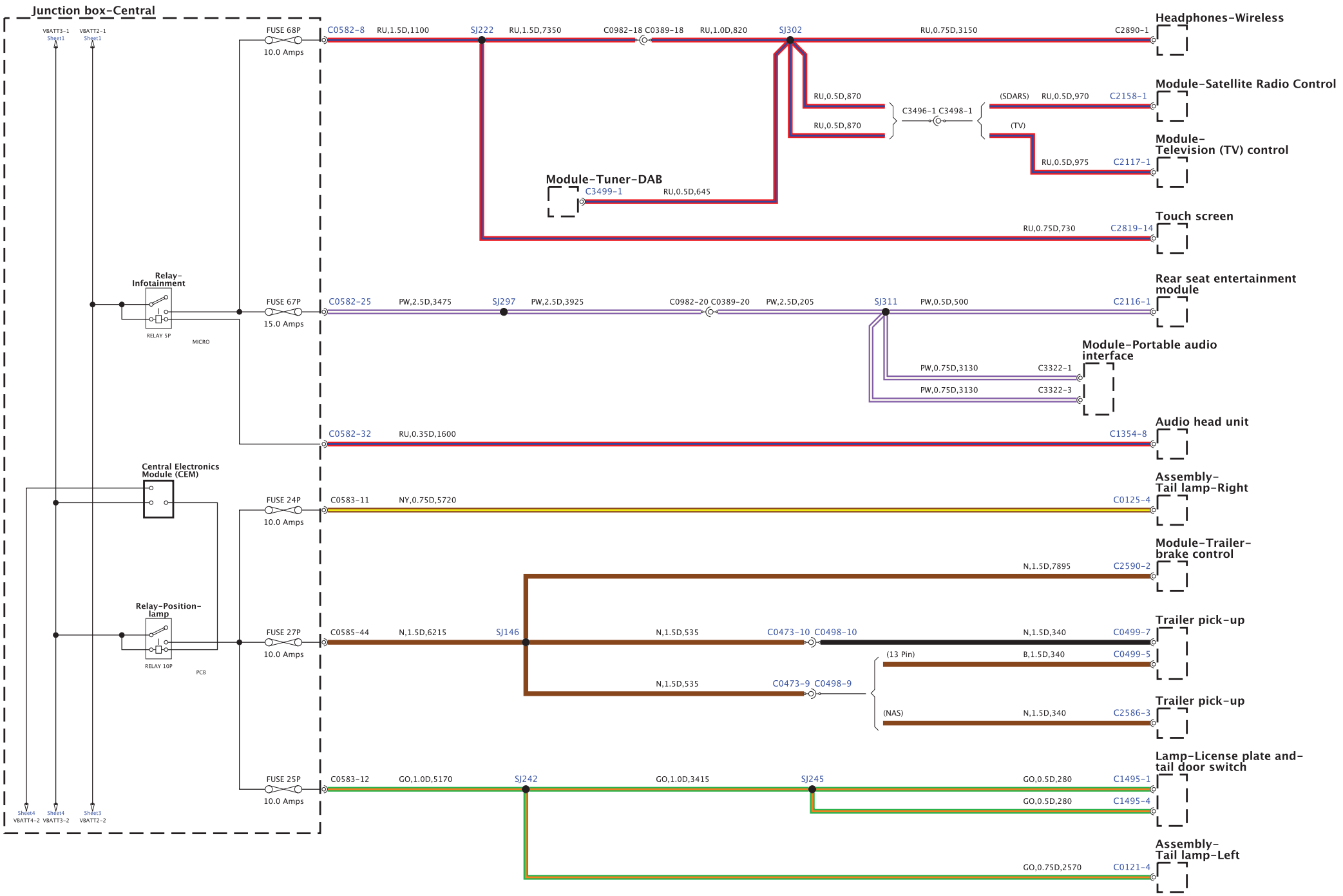

BH42-70010-D-A-03-13-Service (L322-11MY-JO81)

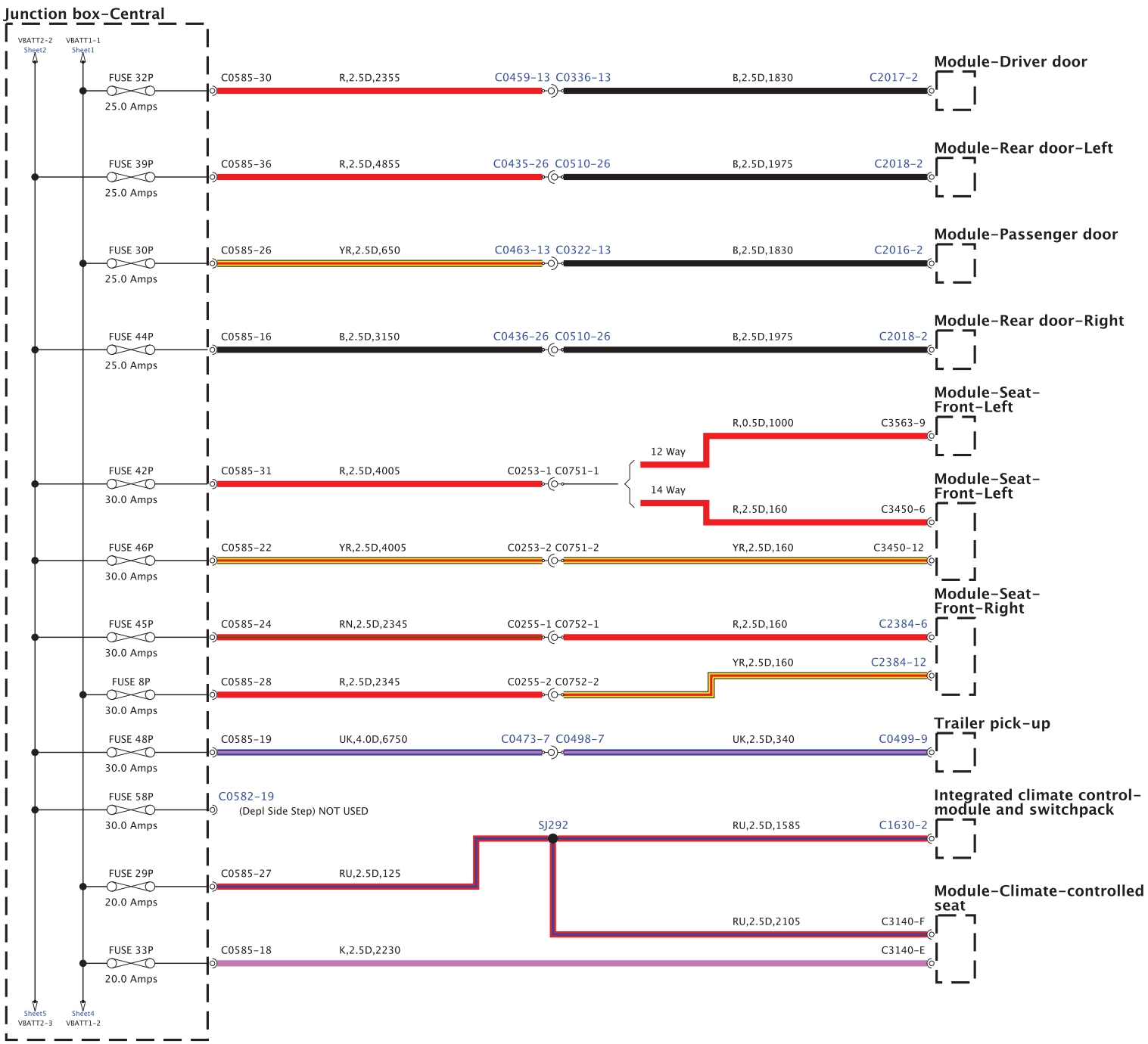

BH42-70010-D-A-04-13-Service (L322-11MY-JOB1)

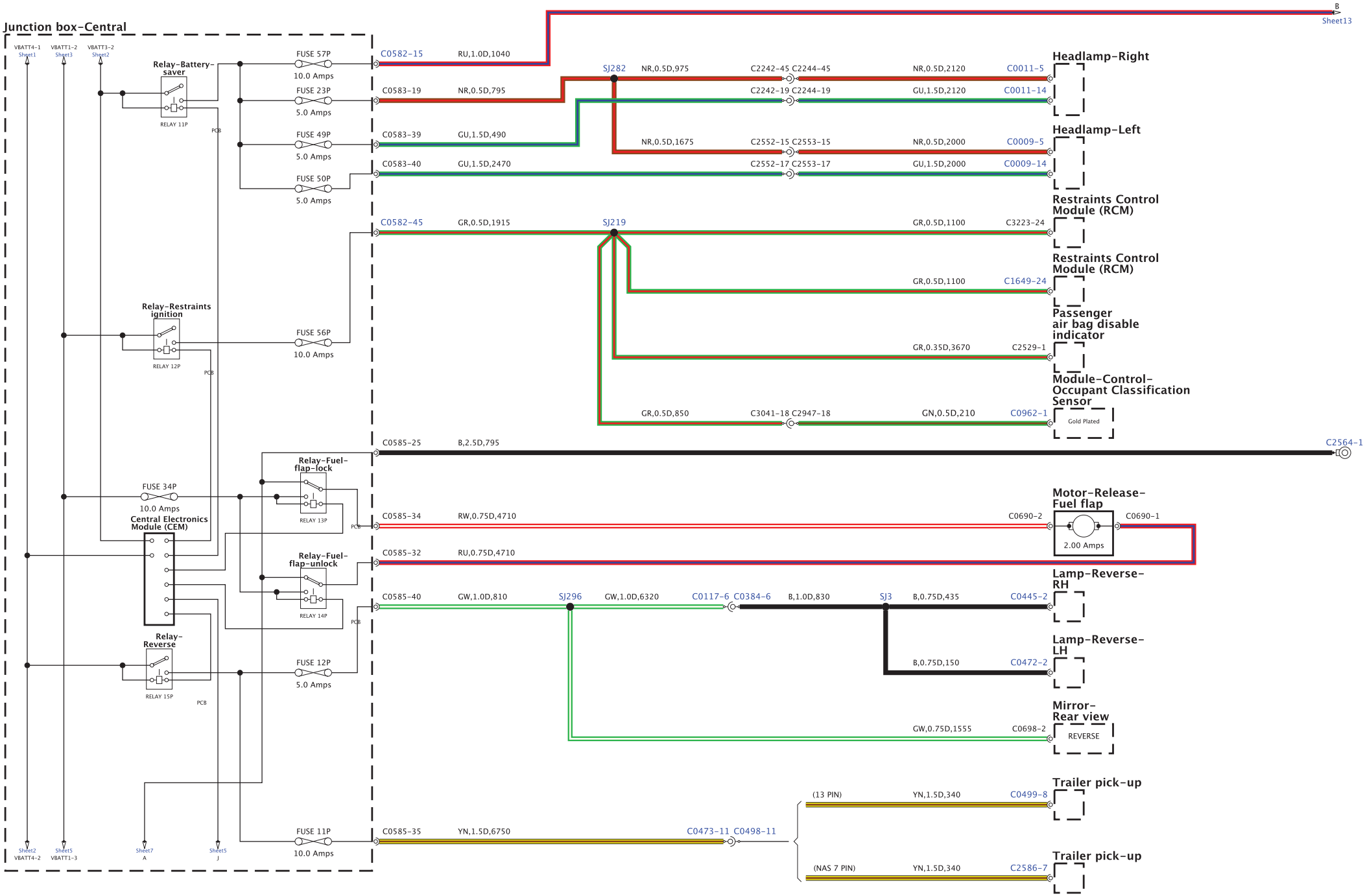

BH42-70010-D-A-05-13-Service (L322-11MY-JOB1)

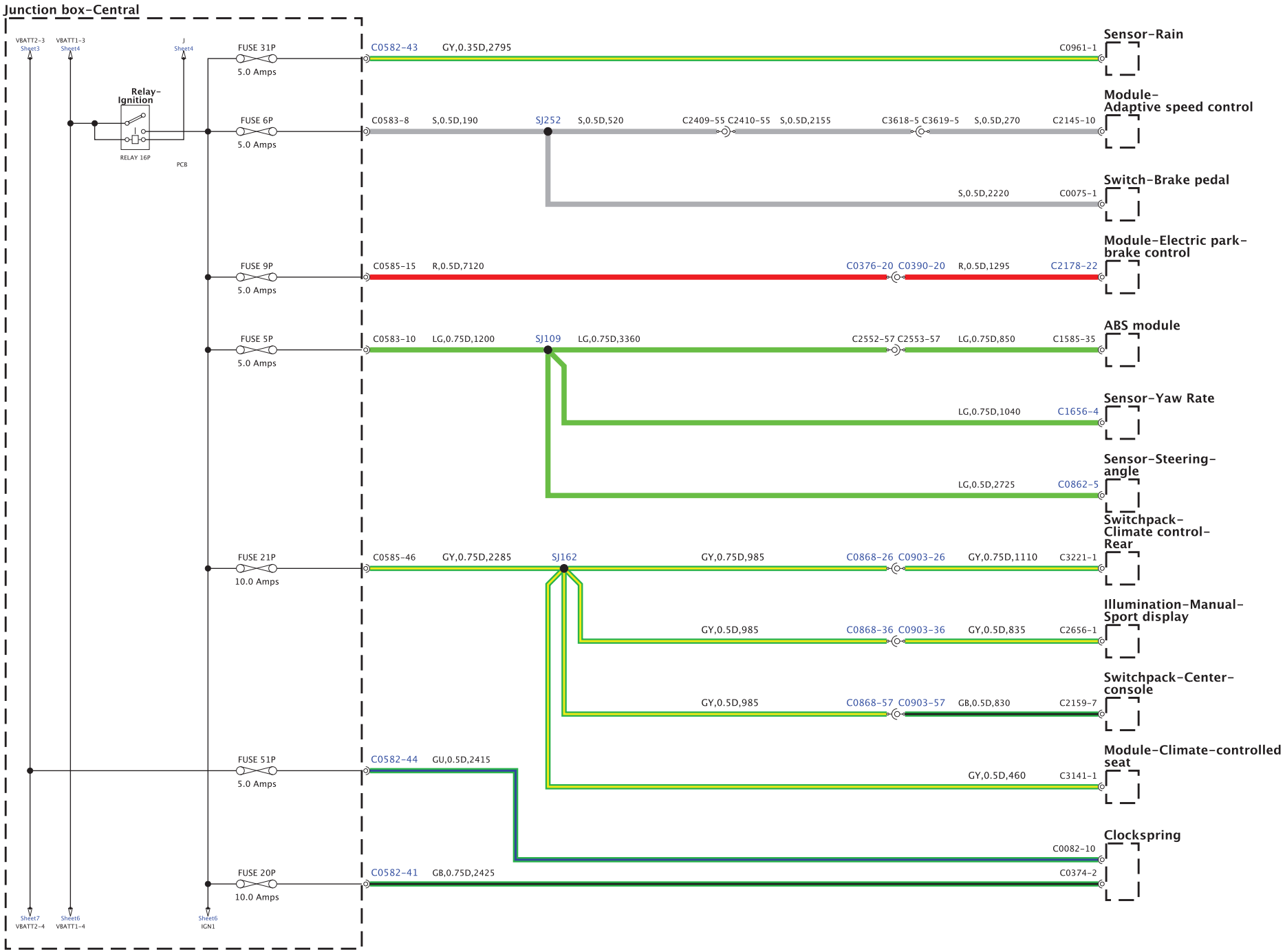

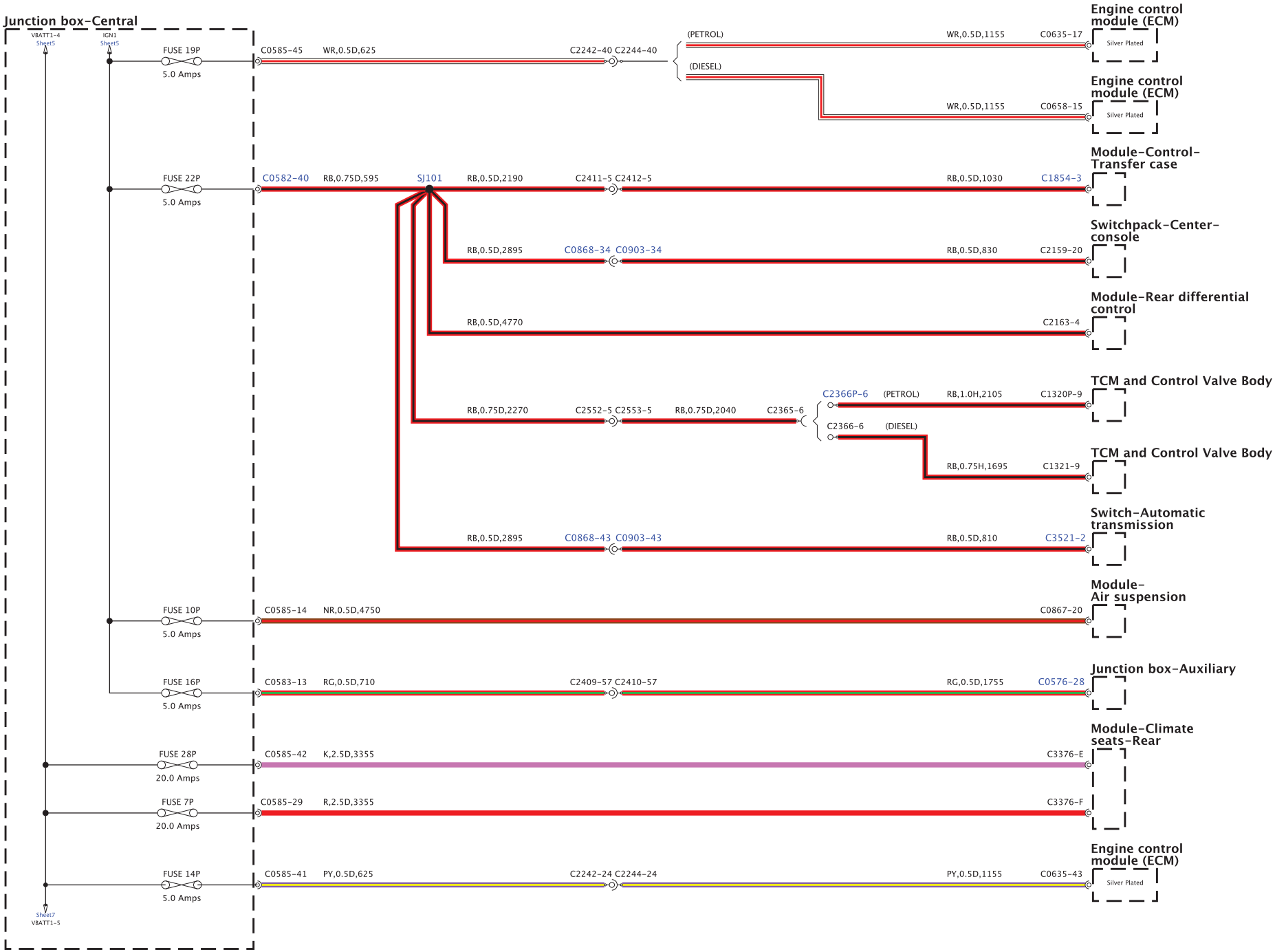
Junction box-Central
VBATT1-4
Sheet5
IGN1
Sheet5
FUSE 19P
5.0 Amps
C0585-45 WR,0.5D,625 C2242-40 C2244-40
(PETROL)
WR,0.5D,1155 C0635-17
Silver Plated
Engine control module (ECM)
(DIESEL)
WR,0.5D,1155 C0658-15
Silver Plated
Engine control module (ECM)
FUSE 22P
5.0 Amps
C0582-40 RB,0.75D,595 SJ101 RB,0.5D,2190 C2411-5 C2412-5 RB,0.5D,1030 C1854-3
Module-Control-Transfer case
RB,0.5D,2895 C0868-34 C0903-34 RB,0.5D,830 C2159-20
Switchpack-Center-console
RB,0.5D,4770 C2163-4
Module-Rear differential control
RB,0.75D,2270 C2552-5 C2553-5 RB,0.75D,2040 C2365-6
C2366P-6 (PETROL) RB,1.0H,2105 C1320P-9
TCM and Control Valve Body
C2366-6 (DIESEL)
RB,0.75H,1695 C1321-9
TCM and Control Valve Body
RB,0.5D,2895 C0868-43 C0903-43 RB,0.5D,810 C3521-2
Switch-Automatic transmission
FUSE 10P
5.0 Amps
C0585-14 NR,0.5D,4750 C0867-20
Module-Air suspension
FUSE 16P
5.0 Amps
C0583-13 RG,0.5D,710 C2409-57 C2410-57 RG,0.5D,1755 C0576-28
Junction box-Auxiliary
FUSE 28P
20.0 Amps
C0585-42 K,2.5D,3355 C3376-E
Module-Climate seats-Rear
FUSE 7P
20.0 Amps
C0585-29 R,2.5D,3355 C3376-F
FUSE 14P
5.0 Amps
C0585-41 PY,0.5D,625 C2242-24 C2244-24 PY,0.5D,1155 C0635-43
Silver Plated
Engine control module (ECM)
Sheet7
VBATT1-5

BH42-70010-D-A-07-13-Service (L322-11MY-JO81)

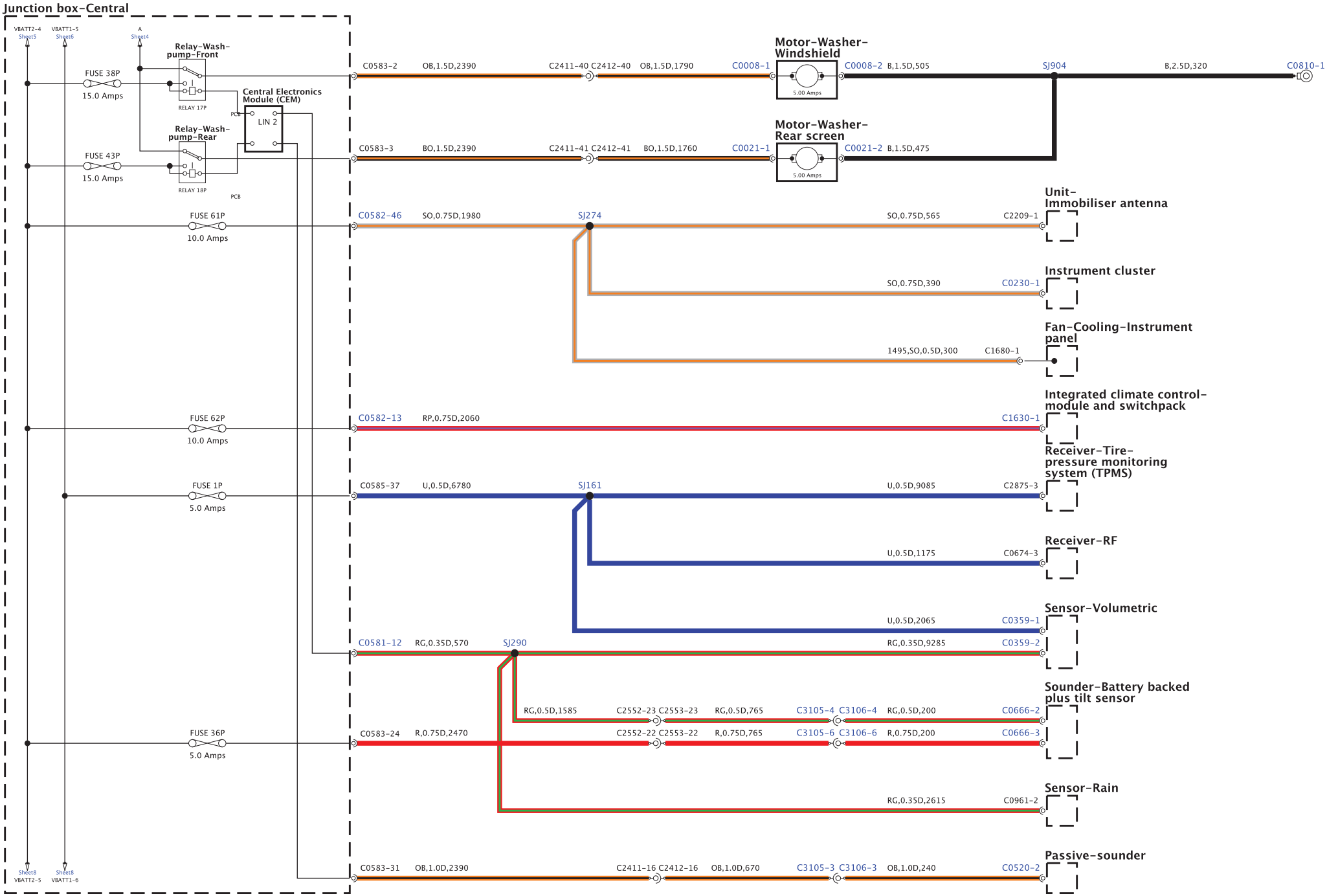

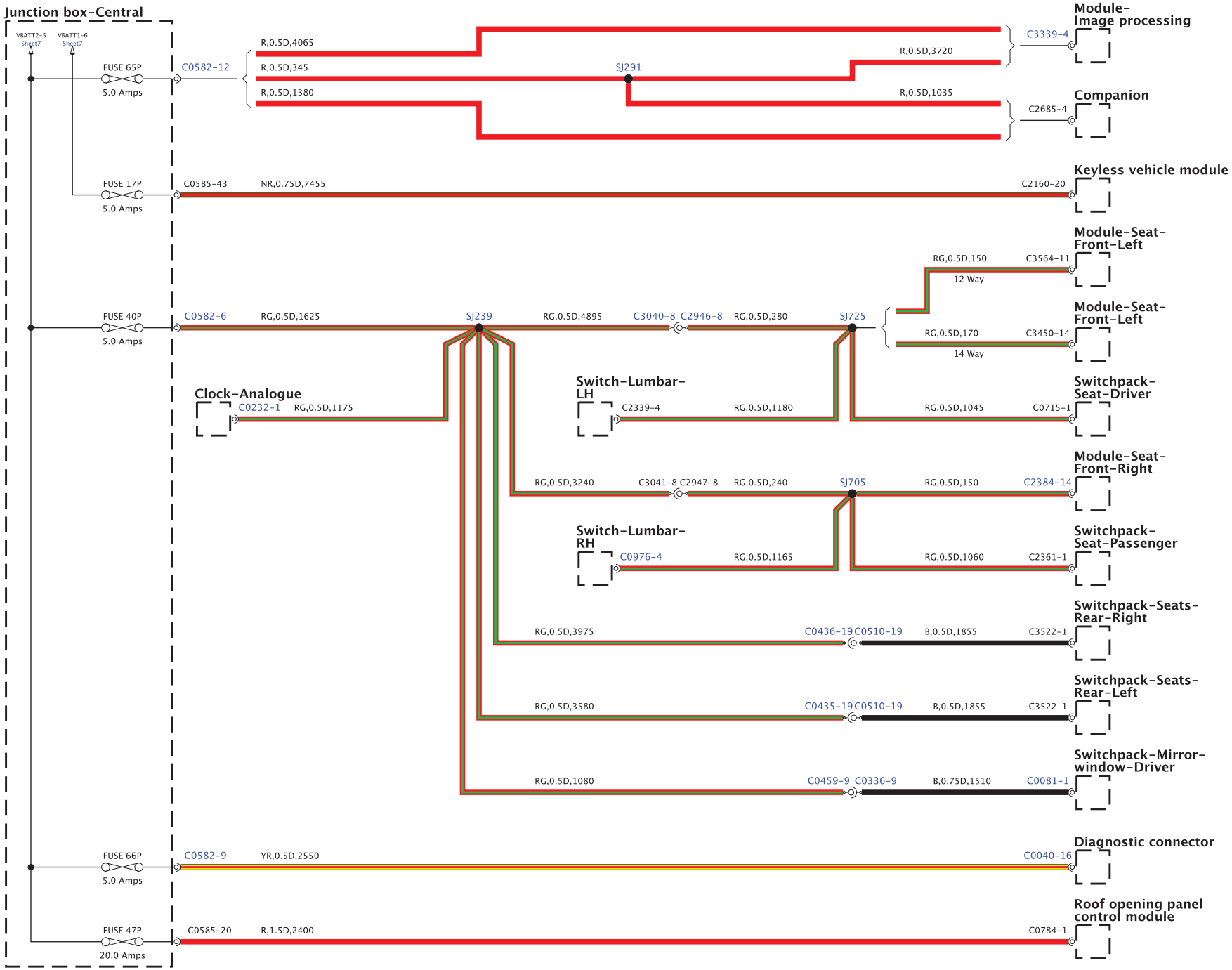
Junction box-Central
VBATT2-5
Sheet7
VBATT1-6
Sheet7
FUSE 65P
5.0 Amps
C0582-12
R,0.5D,4065
R,0.5D,345
R,0.5D,1380
SJ291
R,0.5D,3720
R,0.5D,1035
C3339-4
Module-Image processing
C2685-4
Companion
FUSE 17P
5.0 Amps
C0585-43
NR,0.75D,7455
C2160-20
Keyless vehicle module
FUSE 40P
5.0 Amps
C0582-6
RG,0.5D,1625
SJ239
RG,0.5D,4895
C3040-8
C2946-8
RG,0.5D,280
SJ725
RG,0.5D,150
C3564-11
12 Way
Module-Seat-Front-Left
RG,0.5D,170
C3450-14
14 Way
Module-Seat-Front-Left
Clock-Analogue
C0232-1
RG,0.5D,1175
Switch-Lumbar-LH
C2339-4
RG,0.5D,1180
RG,0.5D,1045
C0715-1
Switchpack-Seat-Driver
RG,0.5D,3240
C3041-8
C2947-8
RG,0.5D,240
SJ705
RG,0.5D,150
C2384-14
Module-Seat-Front-Right
Switch-Lumbar-RH
C0976-4
RG,0.5D,1165
RG,0.5D,1060
C2361-1
Switchpack-Seat-Passenger
RG,0.5D,3975
C0436-19
C0510-19
B,0.5D,1855
C3522-1
Switchpack-Seats-Rear-Right
RG,0.5D,3580
C0435-19
C0510-19
B,0.5D,1855
C3522-1
Switchpack-Seats-Rear-Left
RG,0.5D,1080
C0459-9
C0336-9
B,0.75D,1510
C0081-1
Switchpack-Mirror-window-Driver
FUSE 66P
5.0 Amps
C0582-9
YR,0.5D,2550
C0040-16
Diagnostic connector
FUSE 47P
20.0 Amps
C0585-20
R,1.5D,2400
C0784-1
Roof opening panel control module

BH42-70010-D-A-09-13-Service (L322-13MY-JOB1)

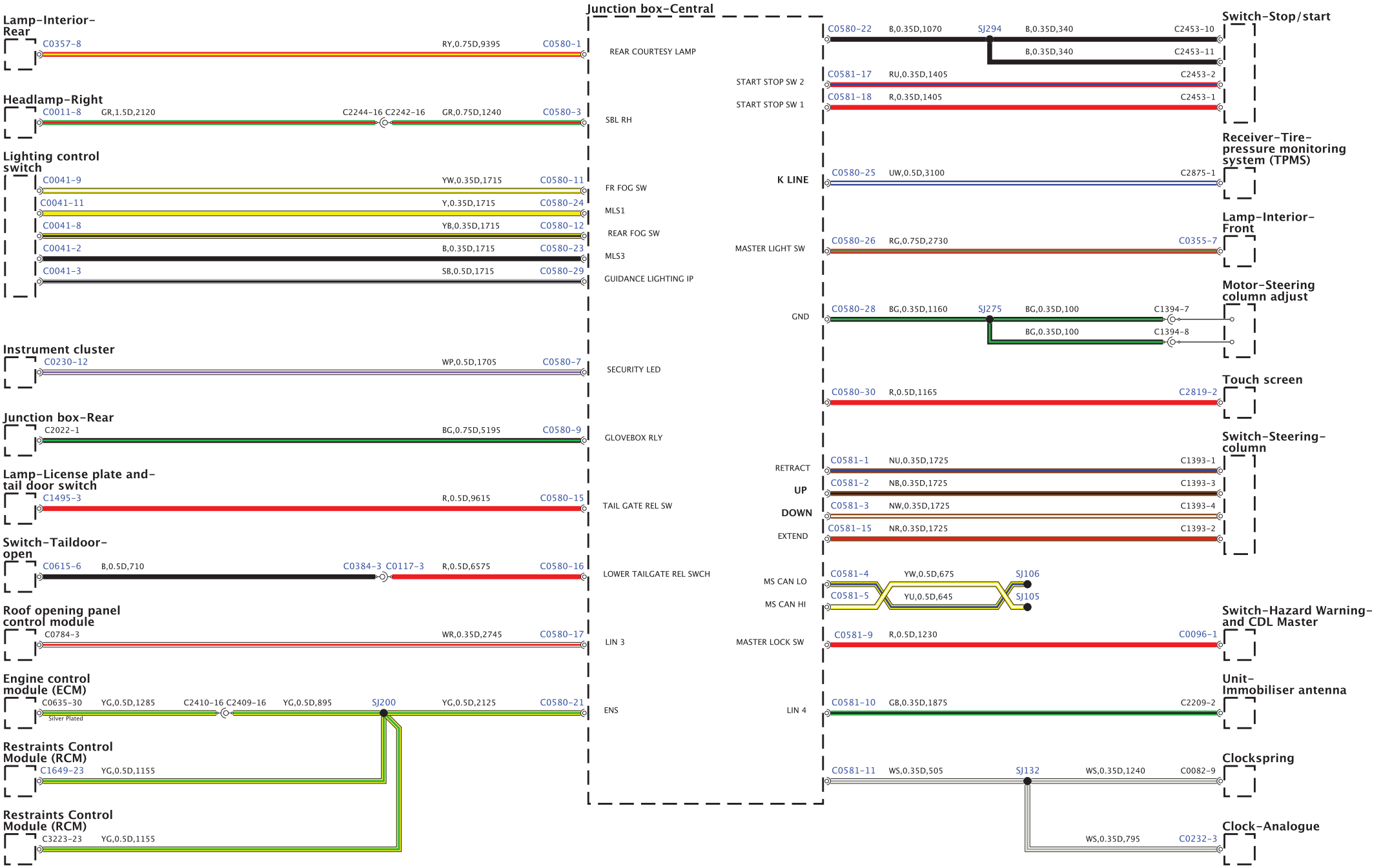

BH42-70010-D-A-10-13-Service (L322-11MY-JOB1)

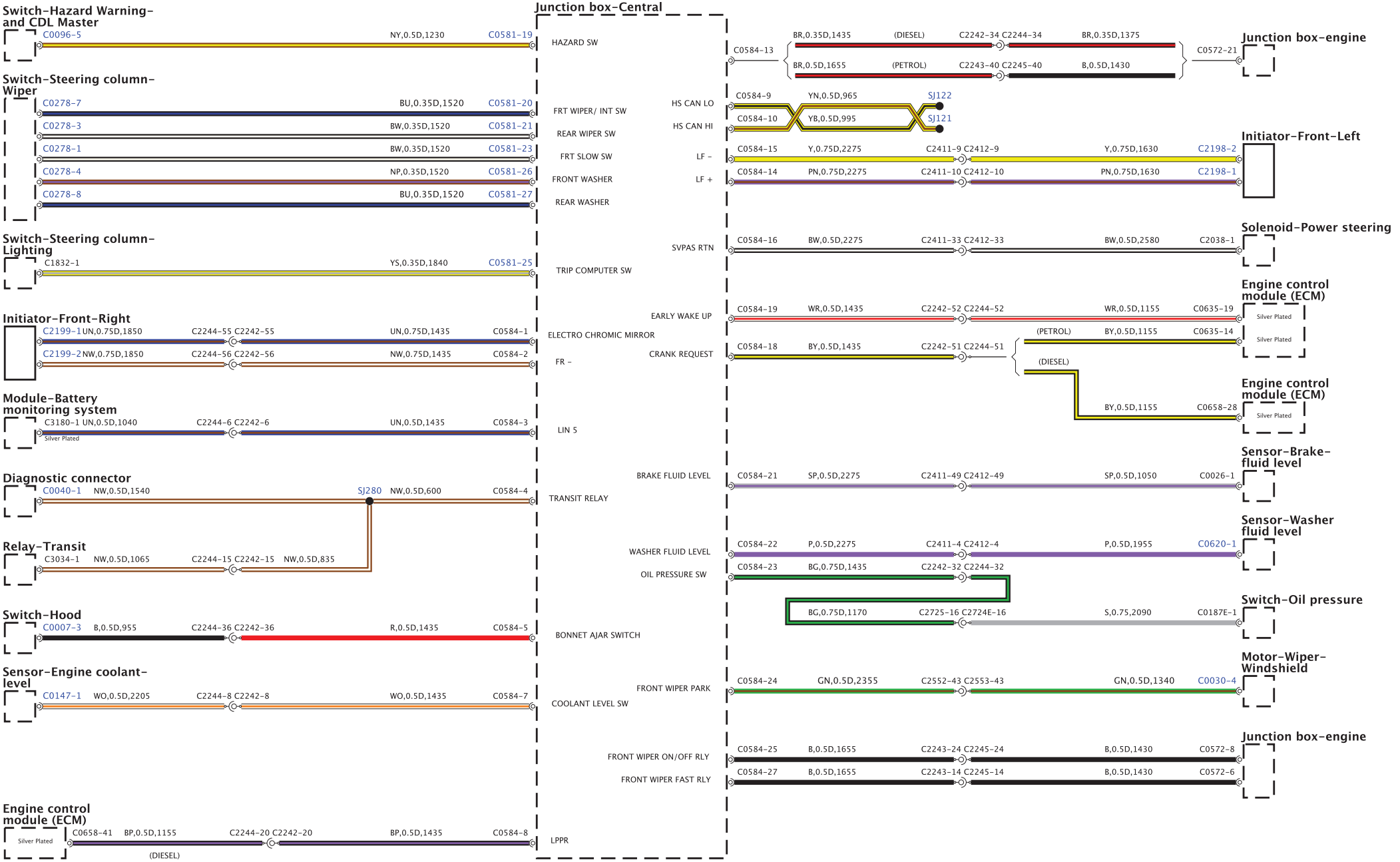

BH42-70010-D-A-11-13-Service (L322-11MY-J081)

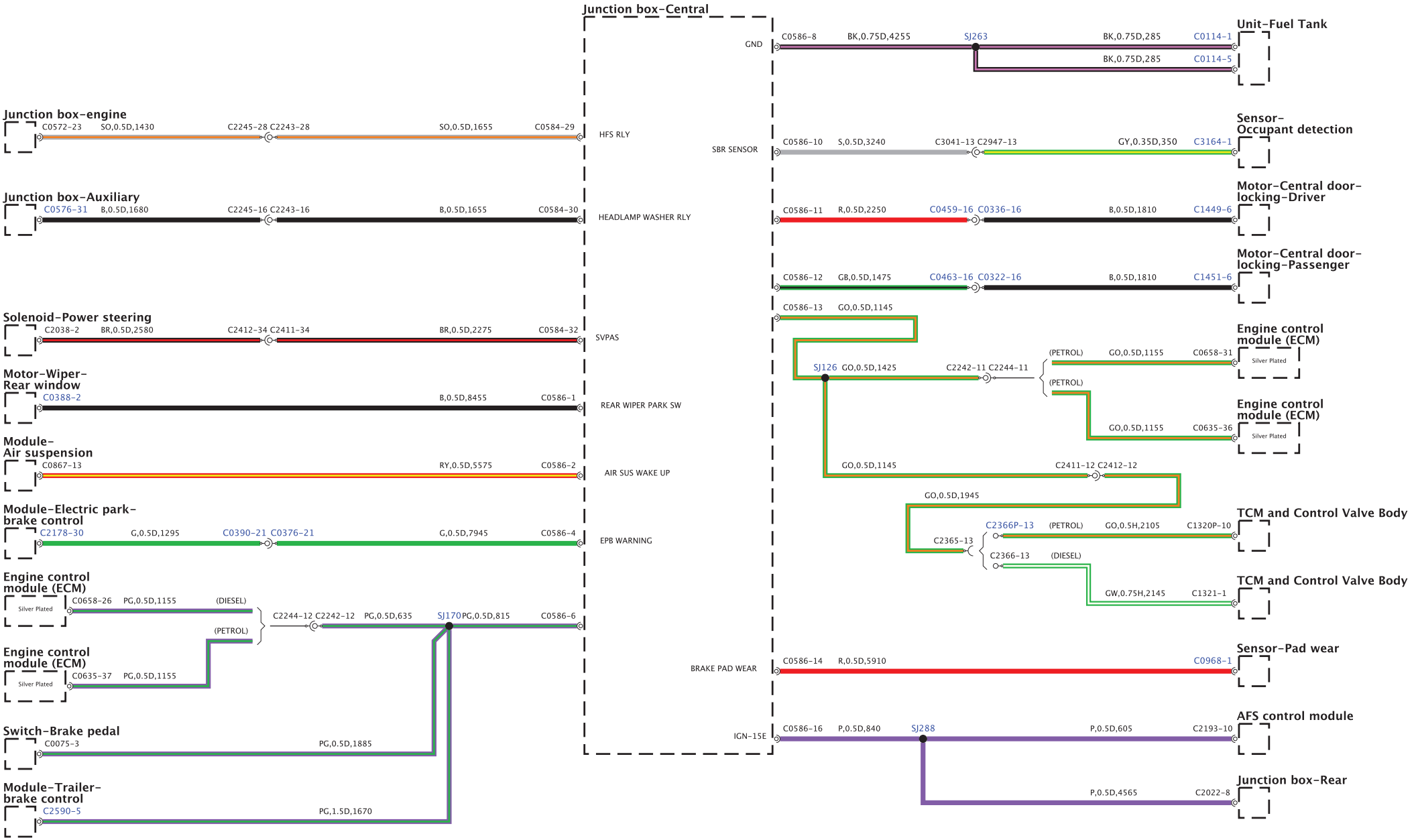

BH42-70010-D-A-12-13-Service (L322-11MY-JOB1)

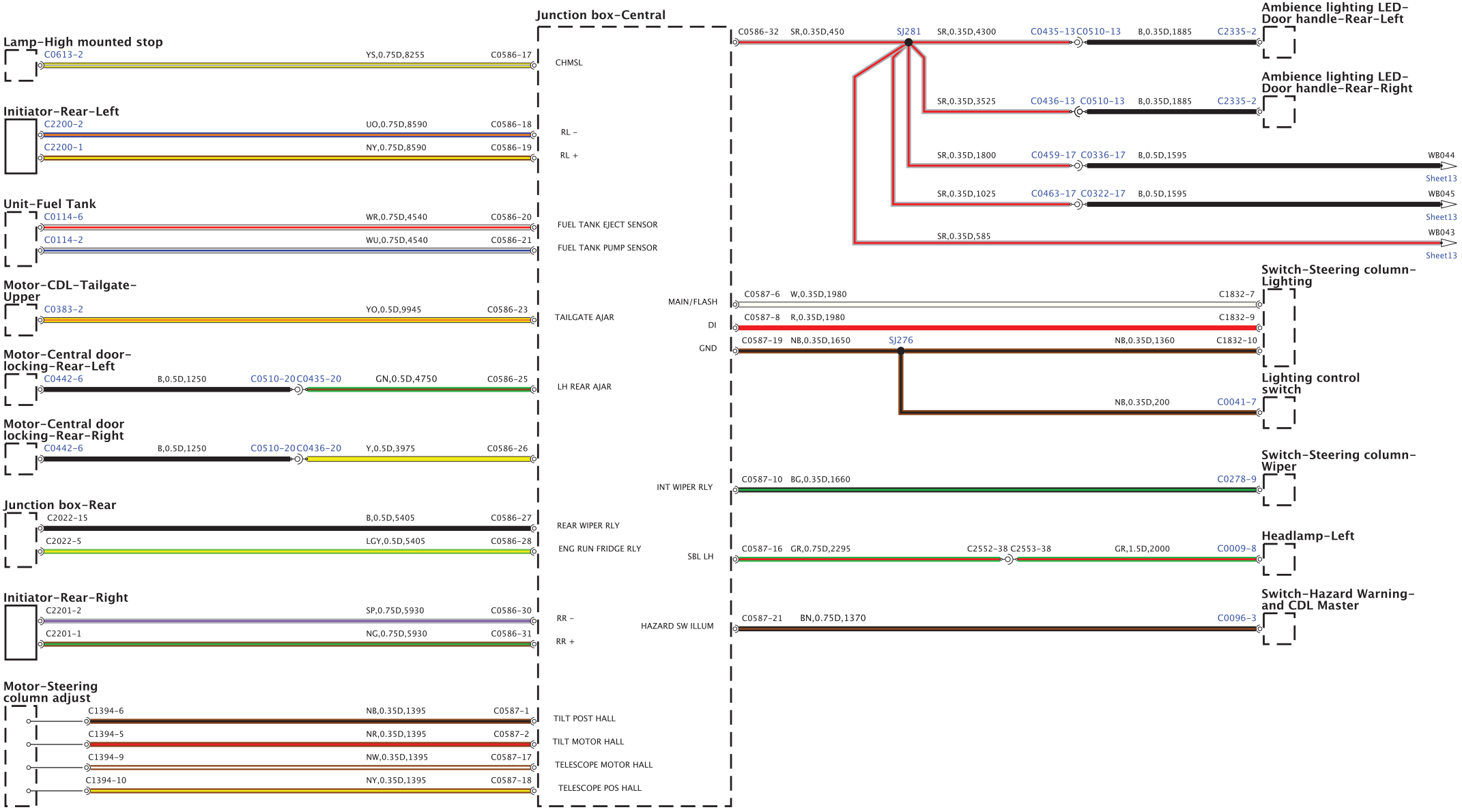

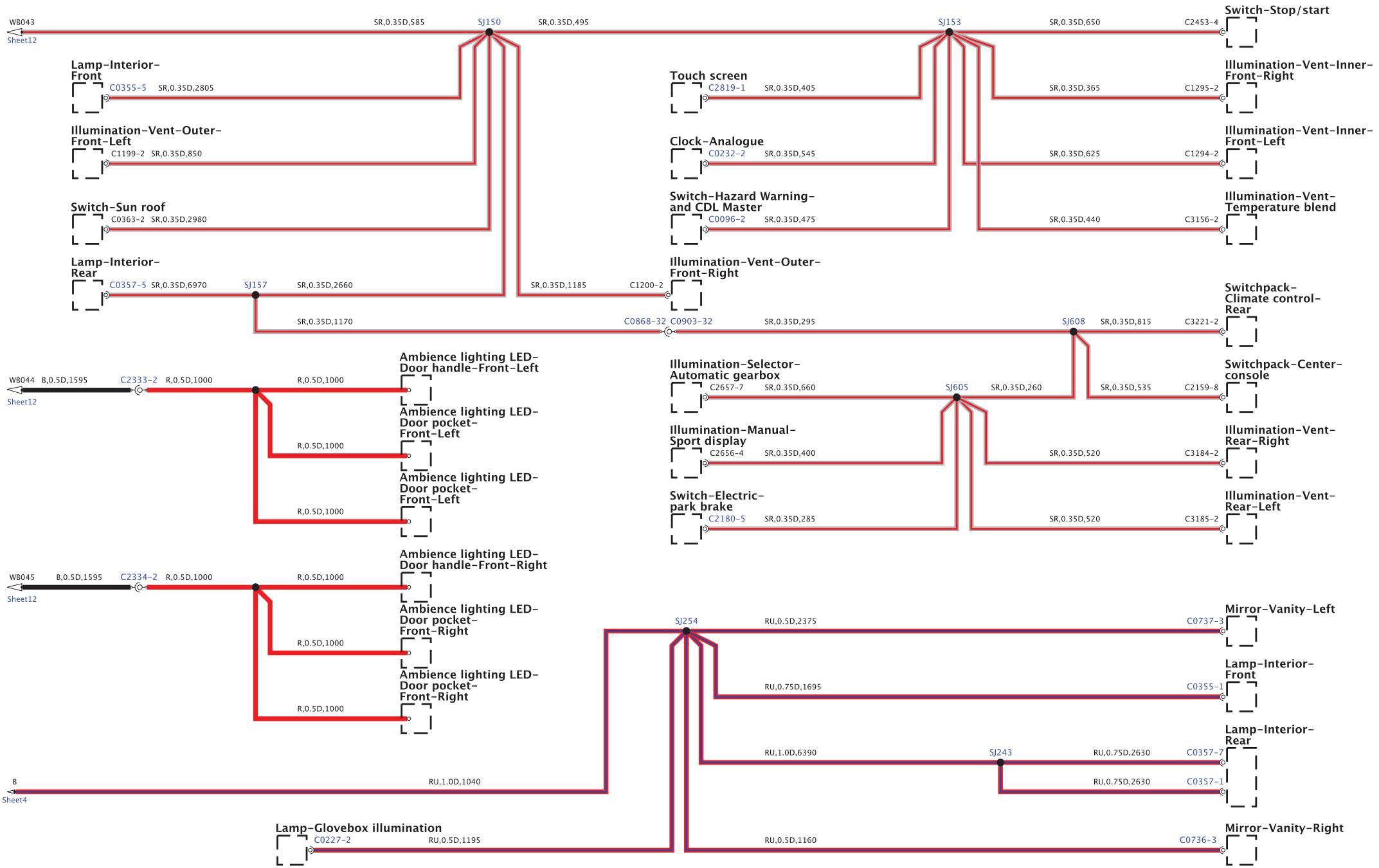
WB043
Sheet12
SR,0.35D,585
SJ150
SR,0.35D,495
SJ153
SR,0.35D,650
C2453-4
Switch-Stop/start
Lamp-Interior-Front
C0355-5
SR,0.35D,2805
Touch screen
C2819-1
SR,0.35D,405
SR,0.35D,365
C1295-2
Illumination-Vent-Inner-Front-Right
Illumination-Vent-Outer-Front-Left
C1199-2
SR,0.35D,850
Clock-Analogue
C0232-2
SR,0.35D,545
SR,0.35D,625
C1294-2
Illumination-Vent-Inner-Front-Left
Switch-Sun roof
C0363-2
SR,0.35D,2980
Switch-Hazard Warning-and CDL Master
C0096-2
SR,0.35D,475
SR,0.35D,440
C3156-2
Illumination-Vent-Temperature blend
Lamp-Interior-Rear
C0357-5
SR,0.35D,6970
SJ157
SR,0.35D,2660
SR,0.35D,1185
C1200-2
Illumination-Vent-Outer-Front-Right
SR,0.35D,1170
C0868-32
C0903-32
SR,0.35D,295
SJ608
SR,0.35D,815
C3221-2
Switchpack-Climate control-Rear
WB044
B,0.5D,1595
C2333-2
R,0.5D,1000
Sheet12
Ambience lighting LED-Door handle-Front-Left
Ambience lighting LED-Door pocket-Front-Left
Ambience lighting LED-Door pocket-Front-Left
Illumination-Selector-Automatic gearbox
C2657-7
SR,0.35D,660
SJ605
SR,0.35D,260
SR,0.35D,535
C2159-8
Switchpack-Center-console
Illumination-Manual-Sport display
C2656-4
SR,0.35D,400
SR,0.35D,520
C3184-2
Illumination-Vent-Rear-Right
Switch-Electric-park brake
C2180-5
SR,0.35D,285
SR,0.35D,520
C3185-2
Illumination-Vent-Rear-Left
WB045
B,0.5D,1595
C2334-2
R,0.5D,1000
Sheet12
Ambience lighting LED-Door handle-Front-Right
Ambience lighting LED-Door pocket-Front-Right
Ambience lighting LED-Door pocket-Front-Right
SJ254
RU,0.5D,2375
C0737-3
Mirror-Vanity-Left
RU,0.75D,1695
C0355-1
Lamp-Interior-Front
RU,1.0D,6390
SJ243
RU,0.75D,2630
C0357-7
RU,0.75D,2630
C0357-1
Lamp-Interior-Rear
B
Sheet4
RU,1.0D,1040
Lamp-Glovebox illumination
C0227-2
RU,0.5D,1195
RU,0.5D,1160
C0736-3
Mirror-Vanity-Right

BH42-70010-C-A-01-02-Service (L322-11MY-JOB1)

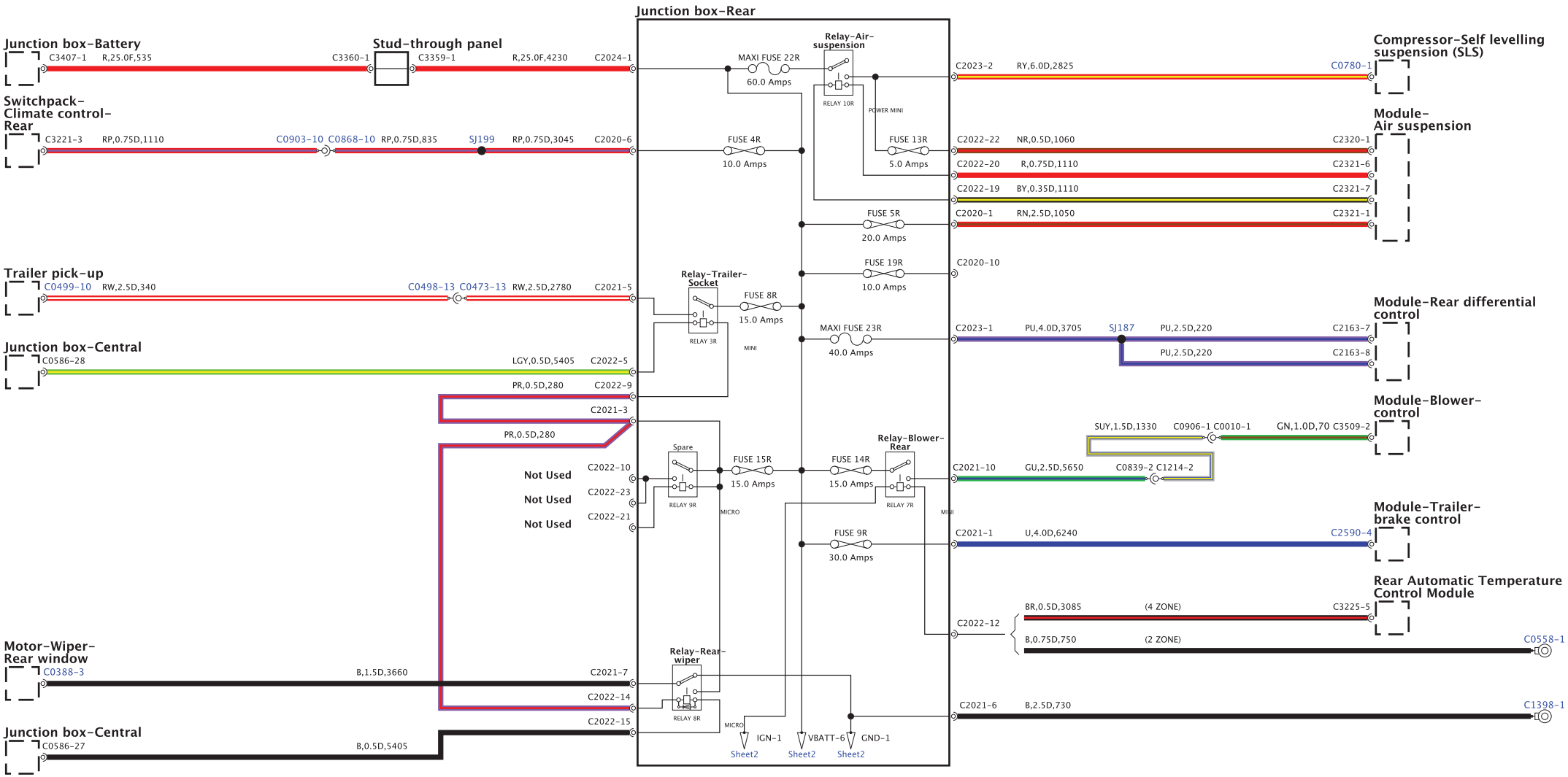

BH42-70010-C-A-02-02-Service (L322-11MY-JOB1)

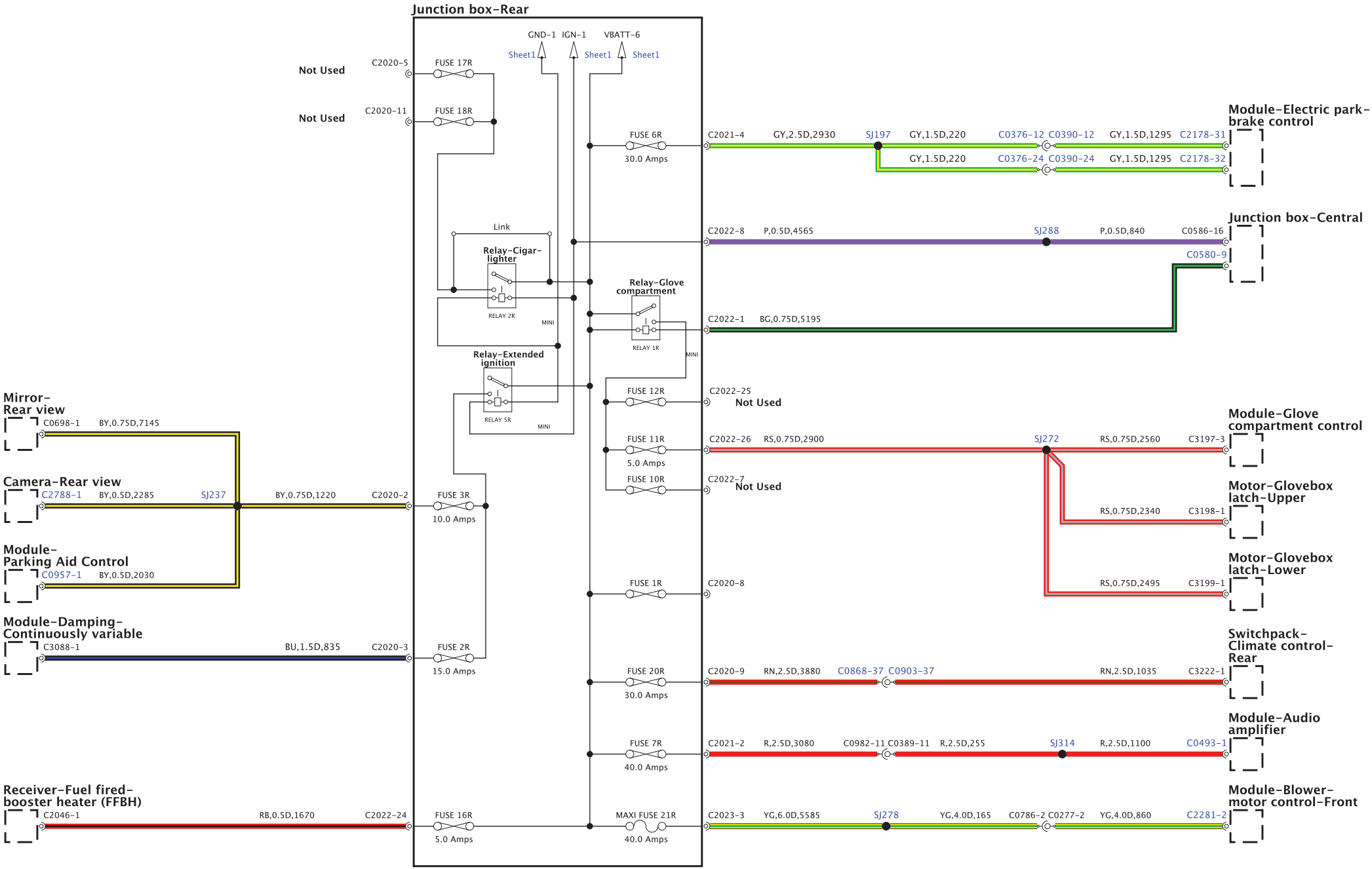

BH42-70012-A-A-01-11-Service (L322-11MY-JOB1)

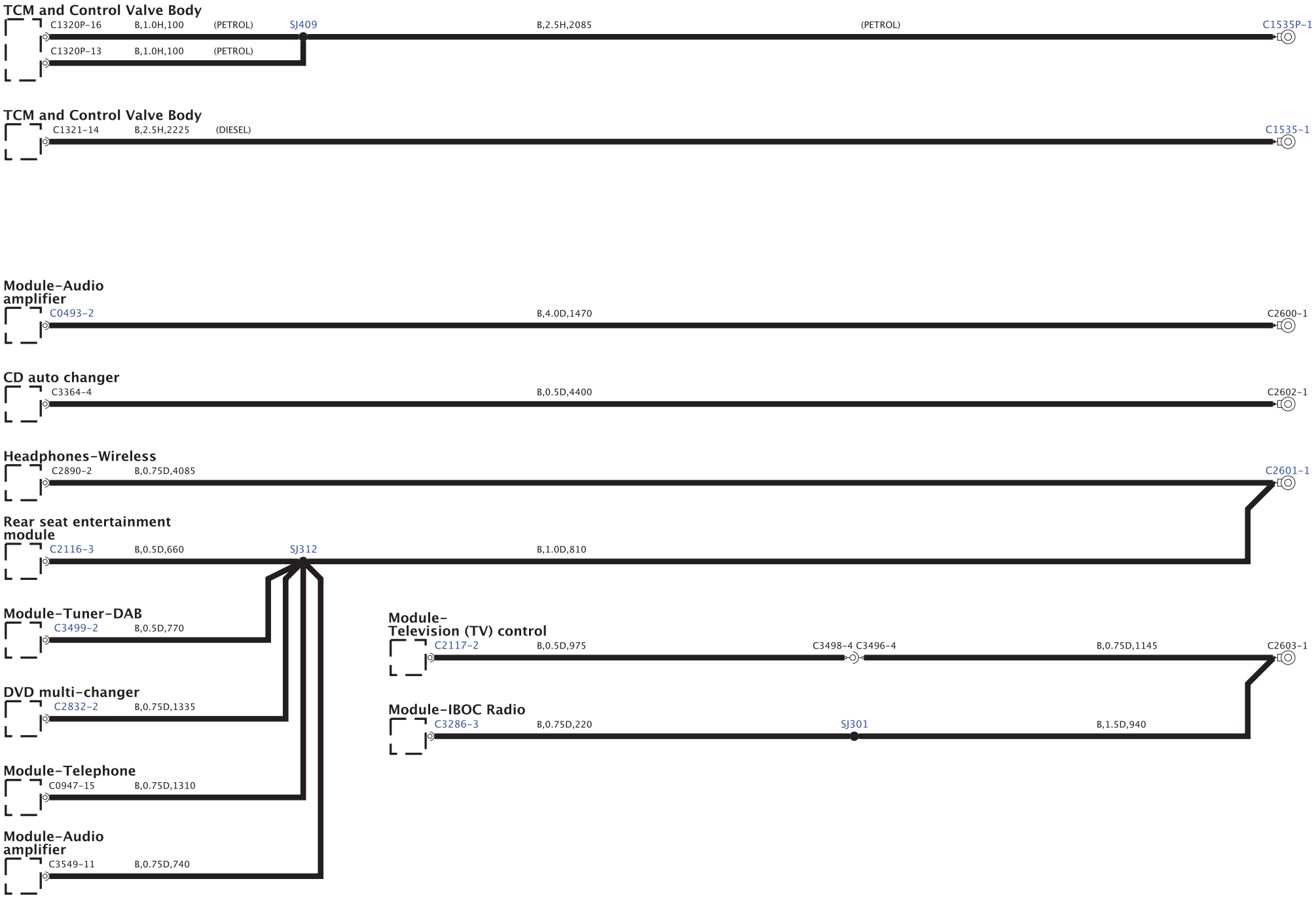

BH42-70012-A-A-02-11-Service (L322-11MY-JO81)

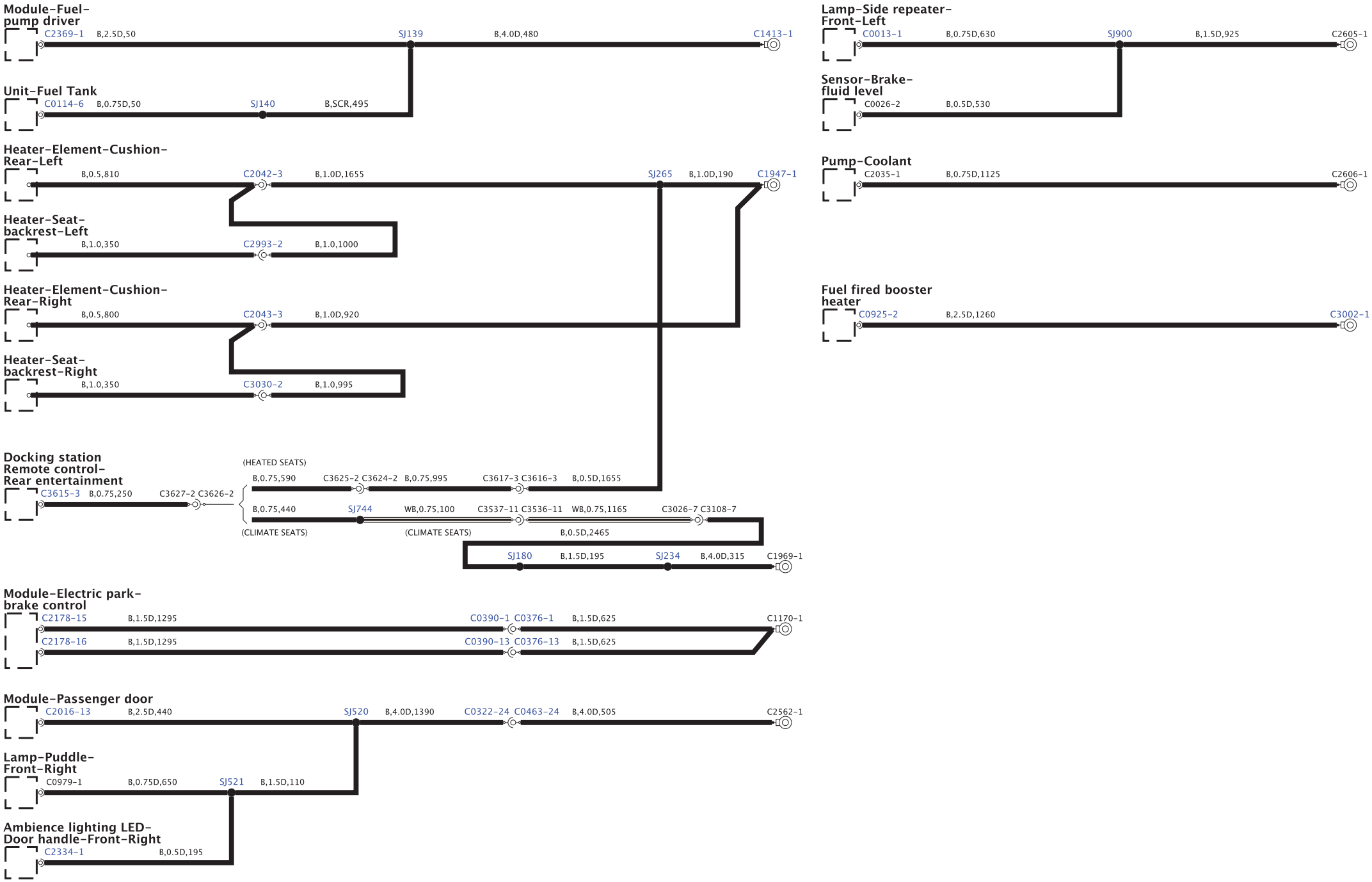

BH42-70012-A-A-03-11-Service (L322-11MY-JOB1)

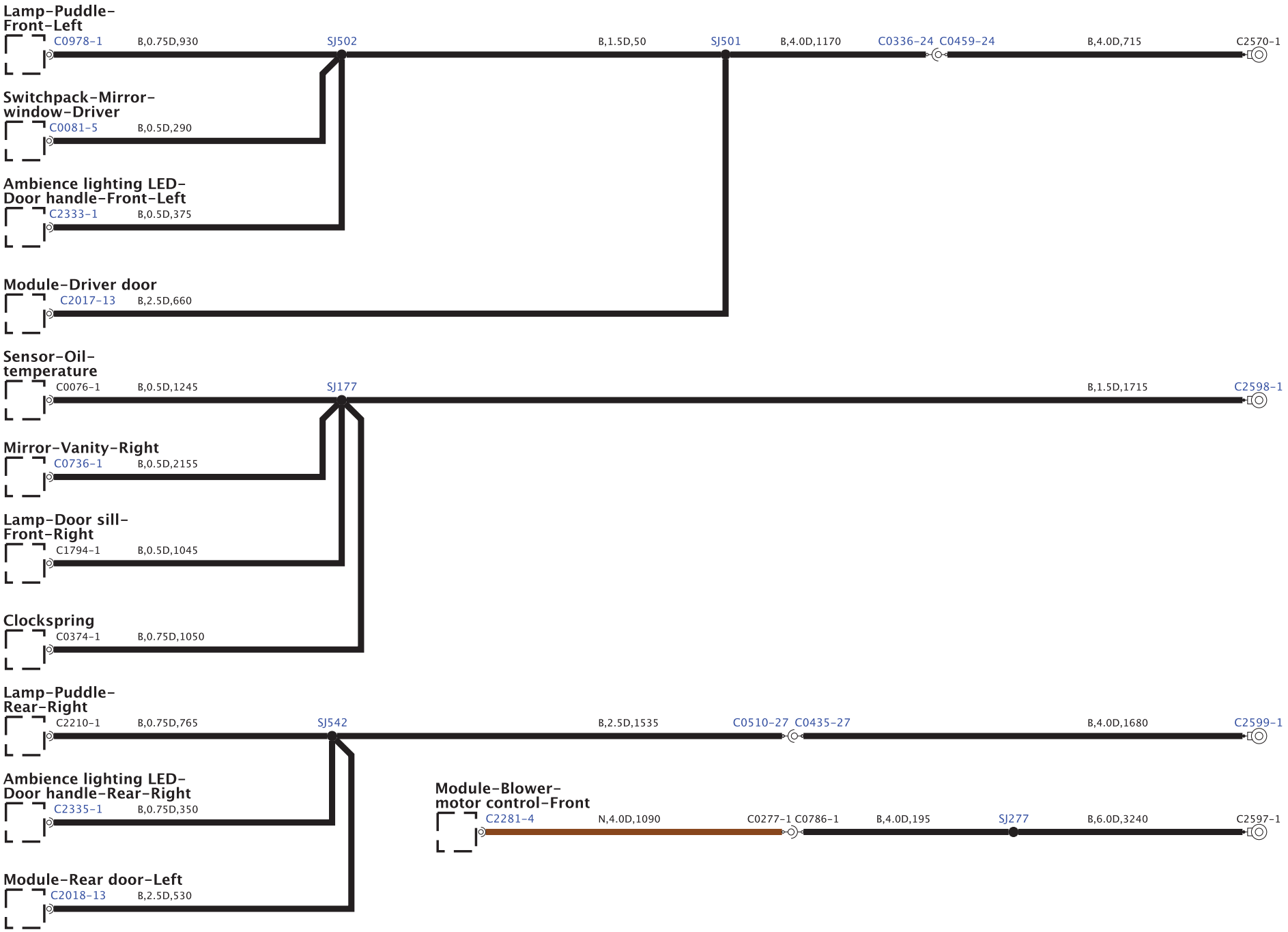

BH42-20012-A-A-04-11-Service (L322-11MY-J081)

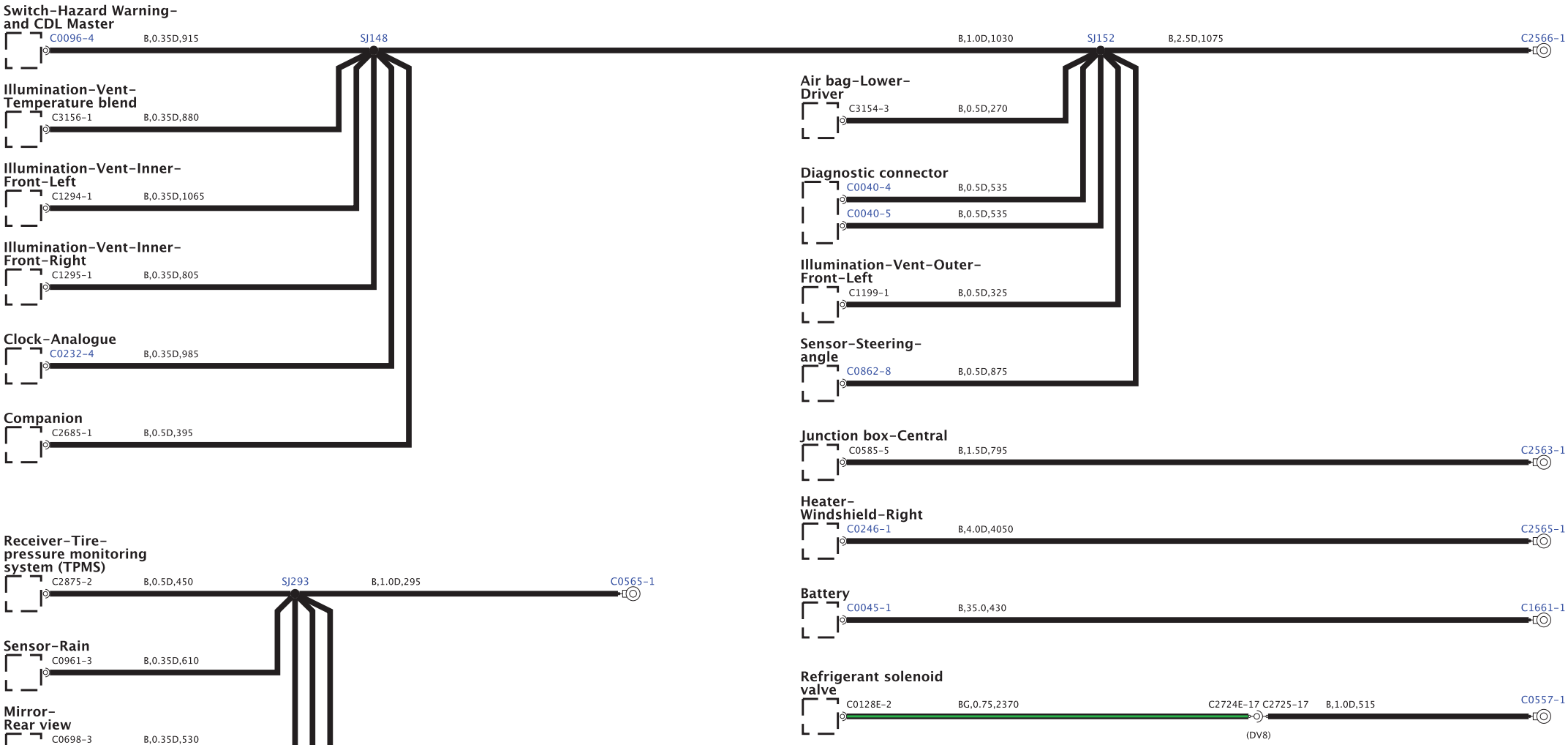

BH42-70012-A-A-05-11-Service (L322-11MY-JOB1)

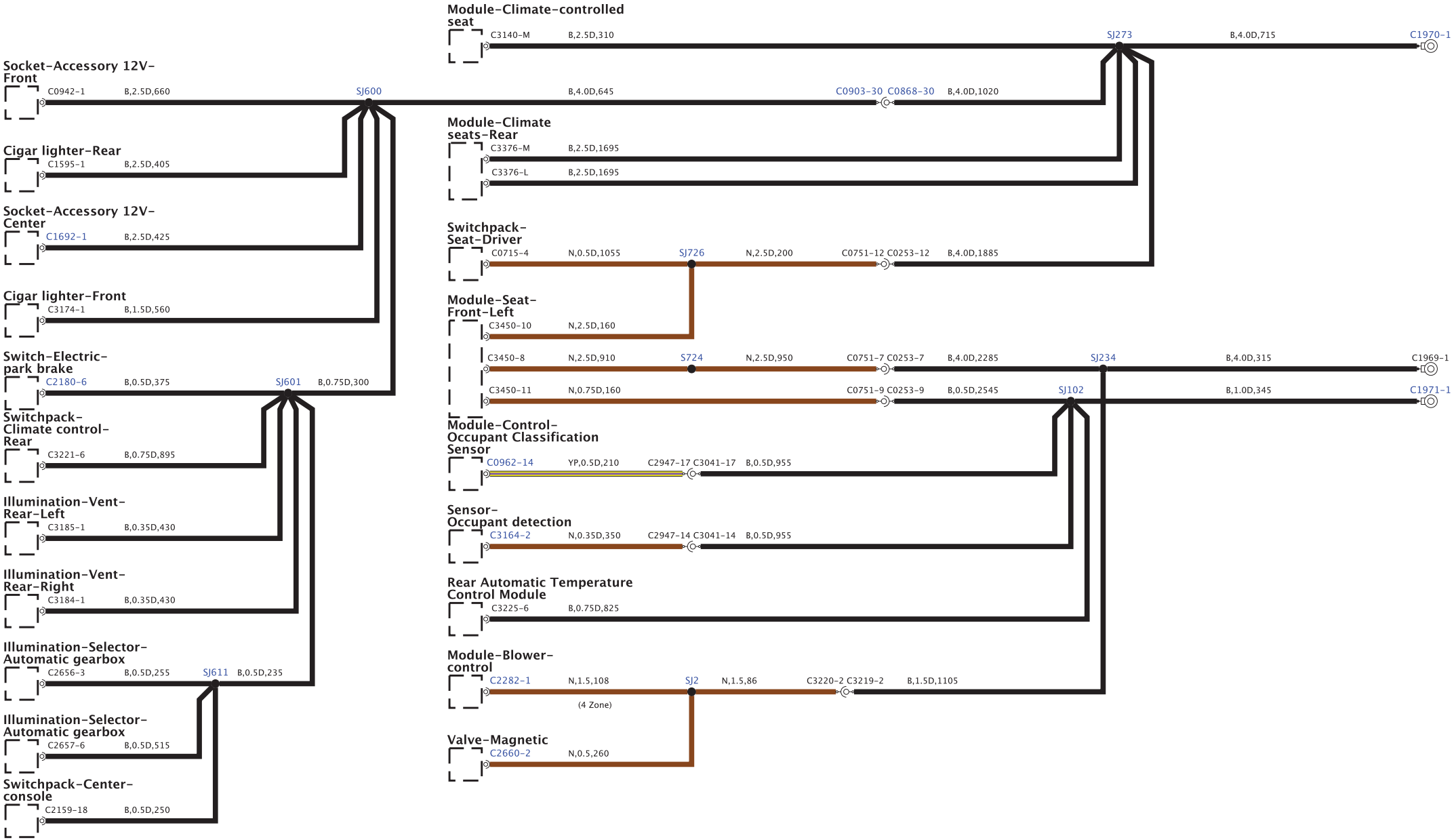

BH42-70012-A-A-06-11-Service (L322-11MY-J081)

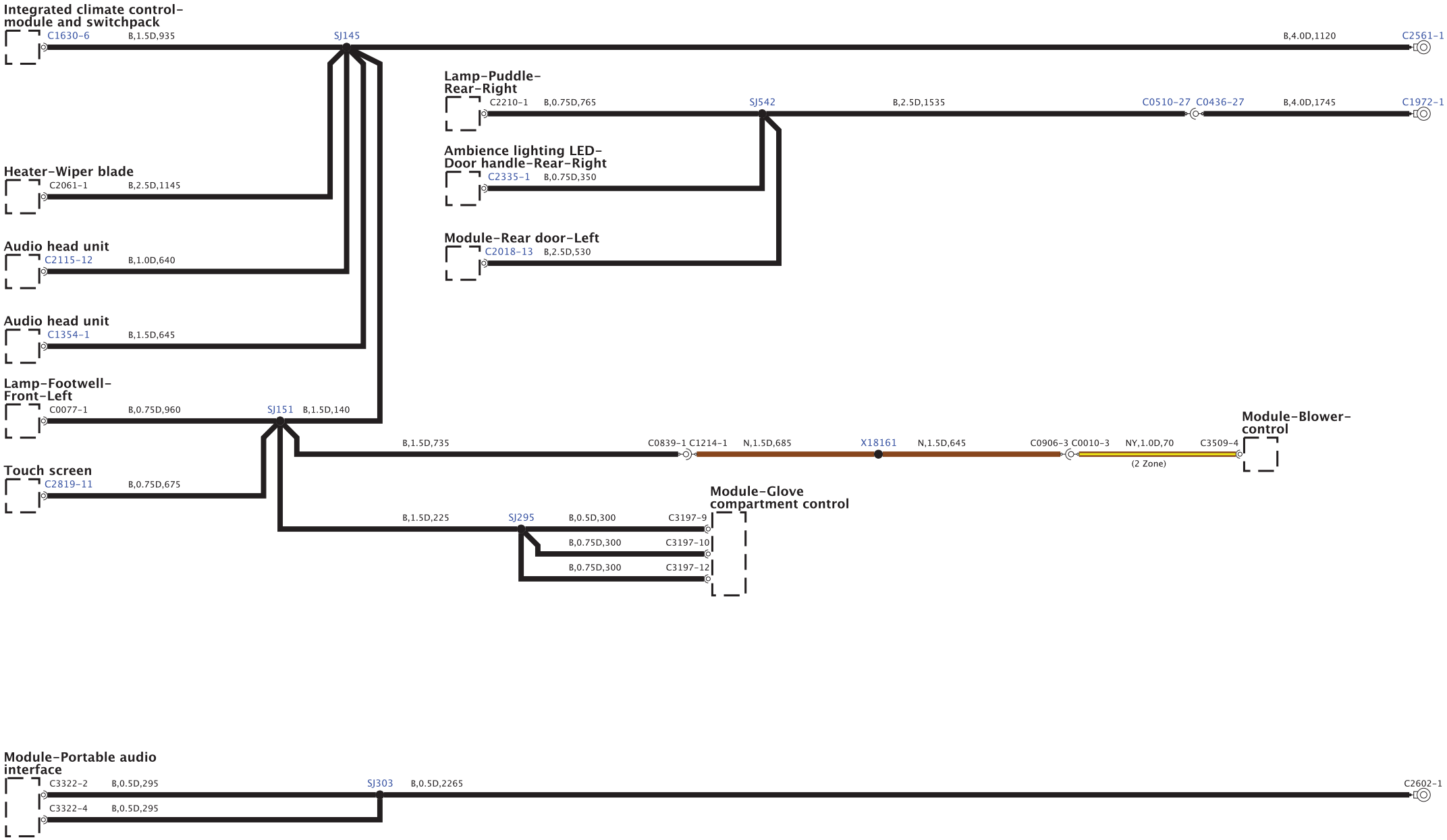

BH42-70012-A-A-07-11-Service (L322-11MY-JOB1)

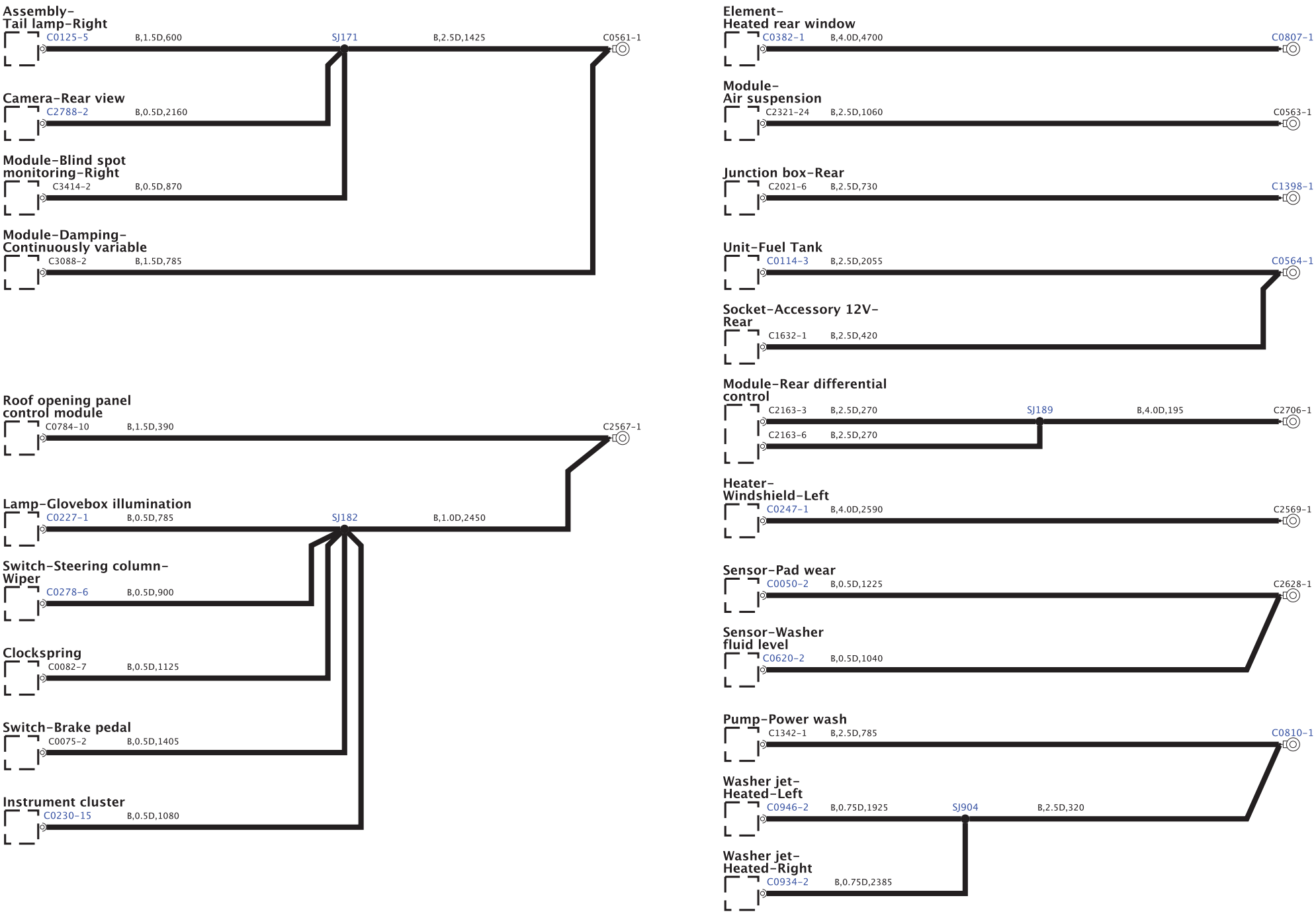

BH42-70012-A-A-08-11-Service (L322-11MY-JOB1)

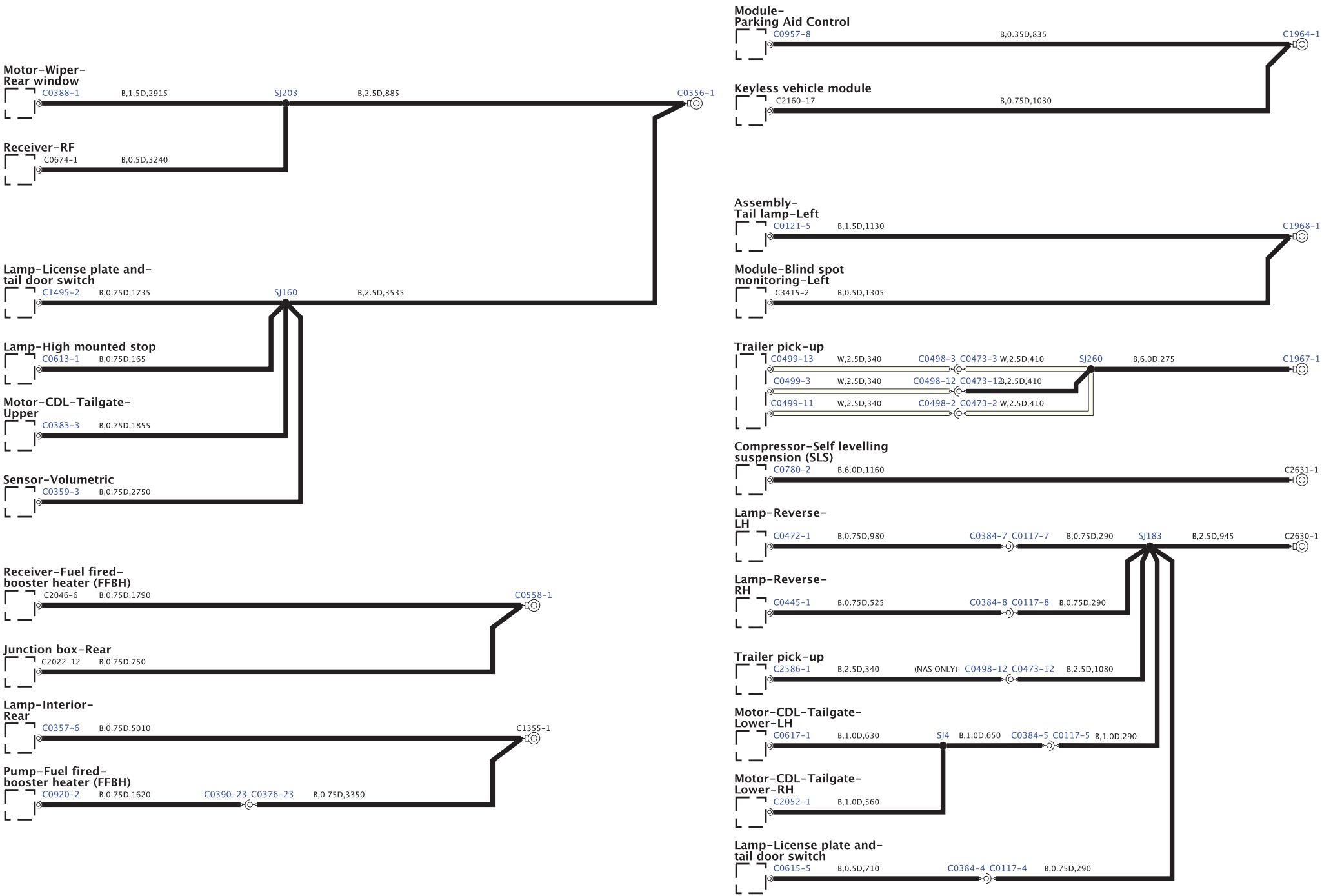

BH42-70012-A-A-09-11-Service (L322-11MY-JOB1)



BH42-70012-A-A-10-11-Service (L322-11MY-J081)

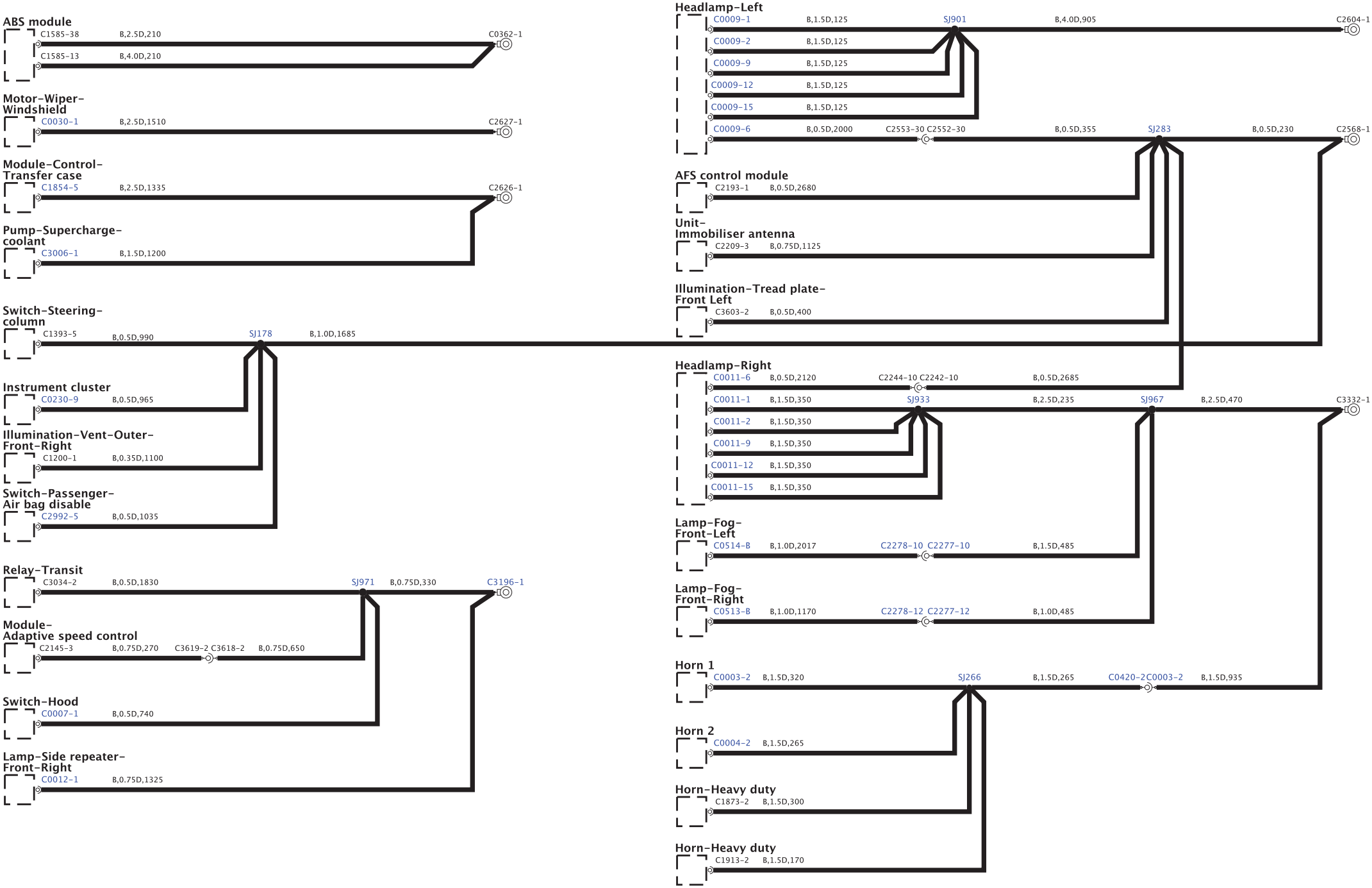

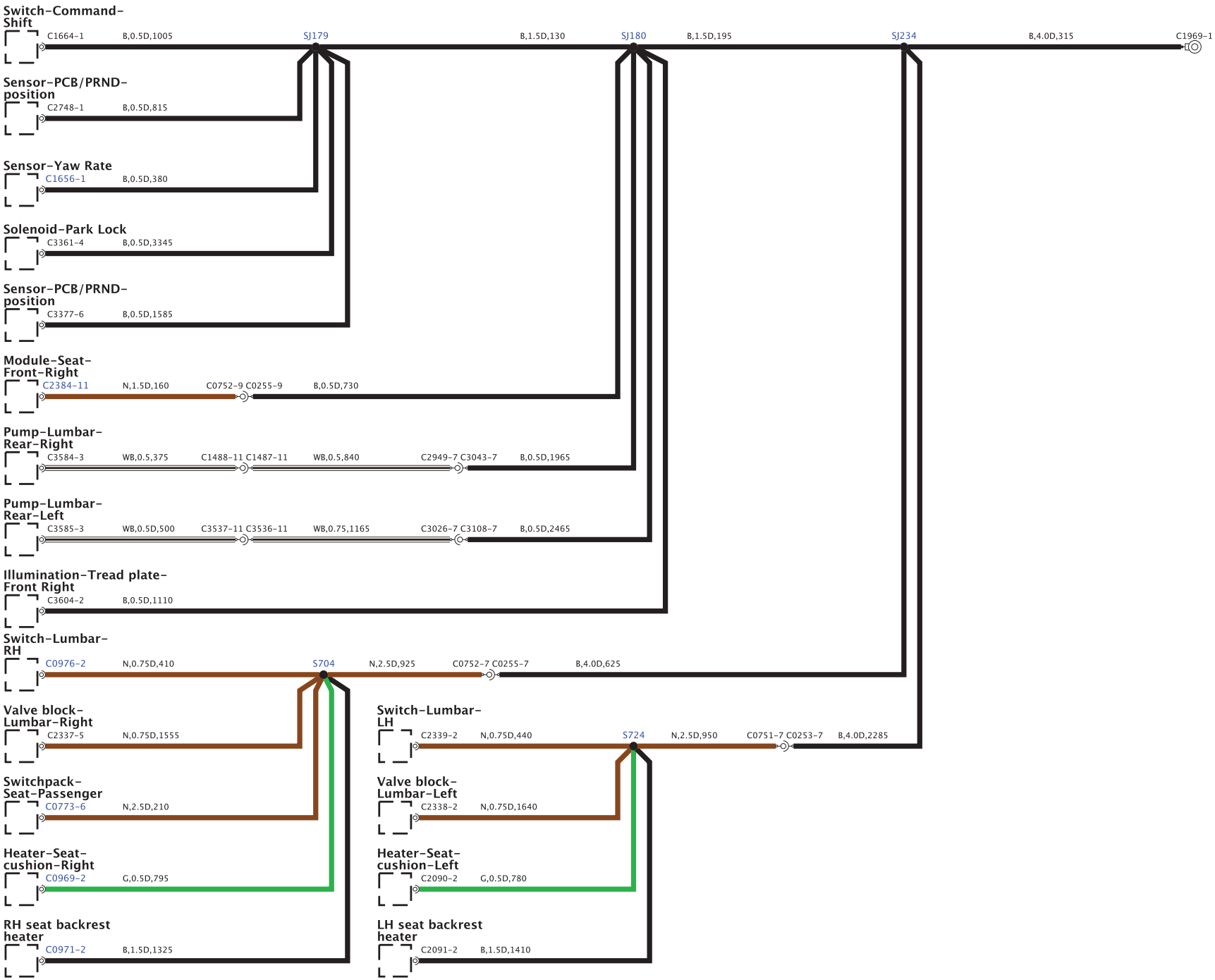
Switch-Command-Shift
C1664-1
B,0.5D,1005
SJ179
B,1.5D,130
SJ180
B,1.5D,195
SJ234
B,4.0D,315
C1969-1
Sensor-PCB/PRND-position
C2748-1
B,0.5D,815
Sensor-Yaw Rate
C1656-1
B,0.5D,380
Solenoid-Park Lock
C3361-4
B,0.5D,3345
Sensor-PCB/PRND-position
C3377-6
B,0.5D,1585
Module-Seat-Front-Right
C2384-11
N,1.5D,160
C0752-9 C0255-9
B,0.5D,730
Pump-Lumbar-Rear-Right
C3584-3
WB,0.5,375
C1488-11 C1487-11
WB,0.5,840
C2949-7 C3043-7
B,0.5D,1965
Pump-Lumbar-Rear-Left
C3585-3
WB,0.5D,500
C3537-11 C3536-11
WB,0.75,1165
C3026-7 C3108-7
B,0.5D,2465
Illumination-Tread plate-Front Right
C3604-2
B,0.5D,1110
Switch-Lumbar-RH
C0976-2
N,0.75D,410
S704
N,2.5D,925
C0752-7 C0255-7
B,4.0D,625
Valve block-Lumbar-Right
C2337-5
N,0.75D,1555
Switchpack-Seat-Passenger
C0773-6
N,2.5D,210
Heater-Seat-cushion-Right
C0969-2
G,0.5D,795
RH seat backrest heater
C0971-2
B,1.5D,1325
Switch-Lumbar-LH
C2339-2
N,0.75D,440
S724
N,2.5D,950
C0751-7 C0253-7
B,4.0D,2285
Valve block-Lumbar-Left
C2338-2
N,0.75D,1640
Heater-Seat-cushion-Left
C2090-2
G,0.5D,780
LH seat backrest heater
C2091-2
B,1.5D,1410

BH42-20010-J-A-01-16-Service (L322-11MY-JOB1)

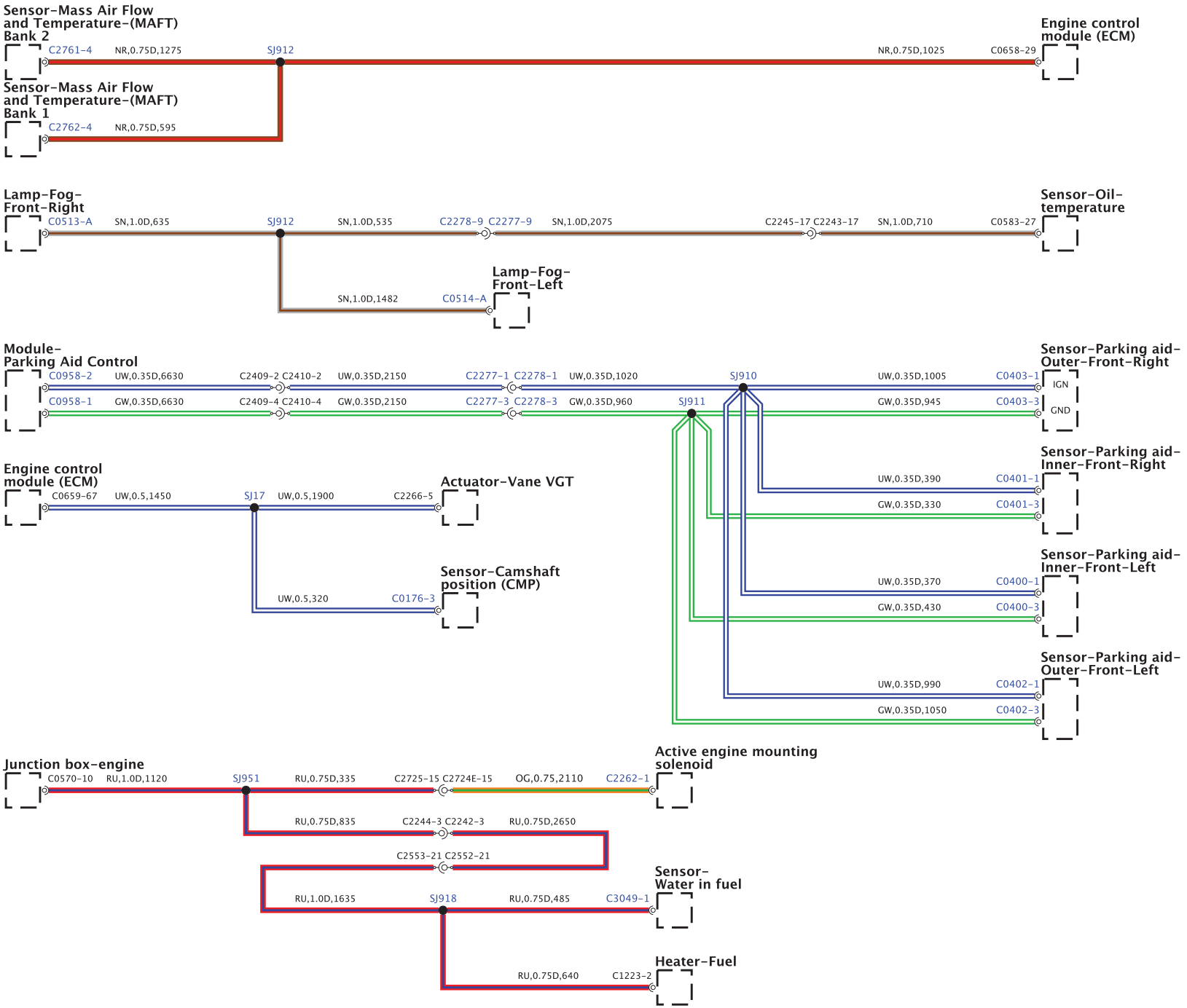

BH42-70010-J-A-02-16-Service (L322-11MY-JOB1)

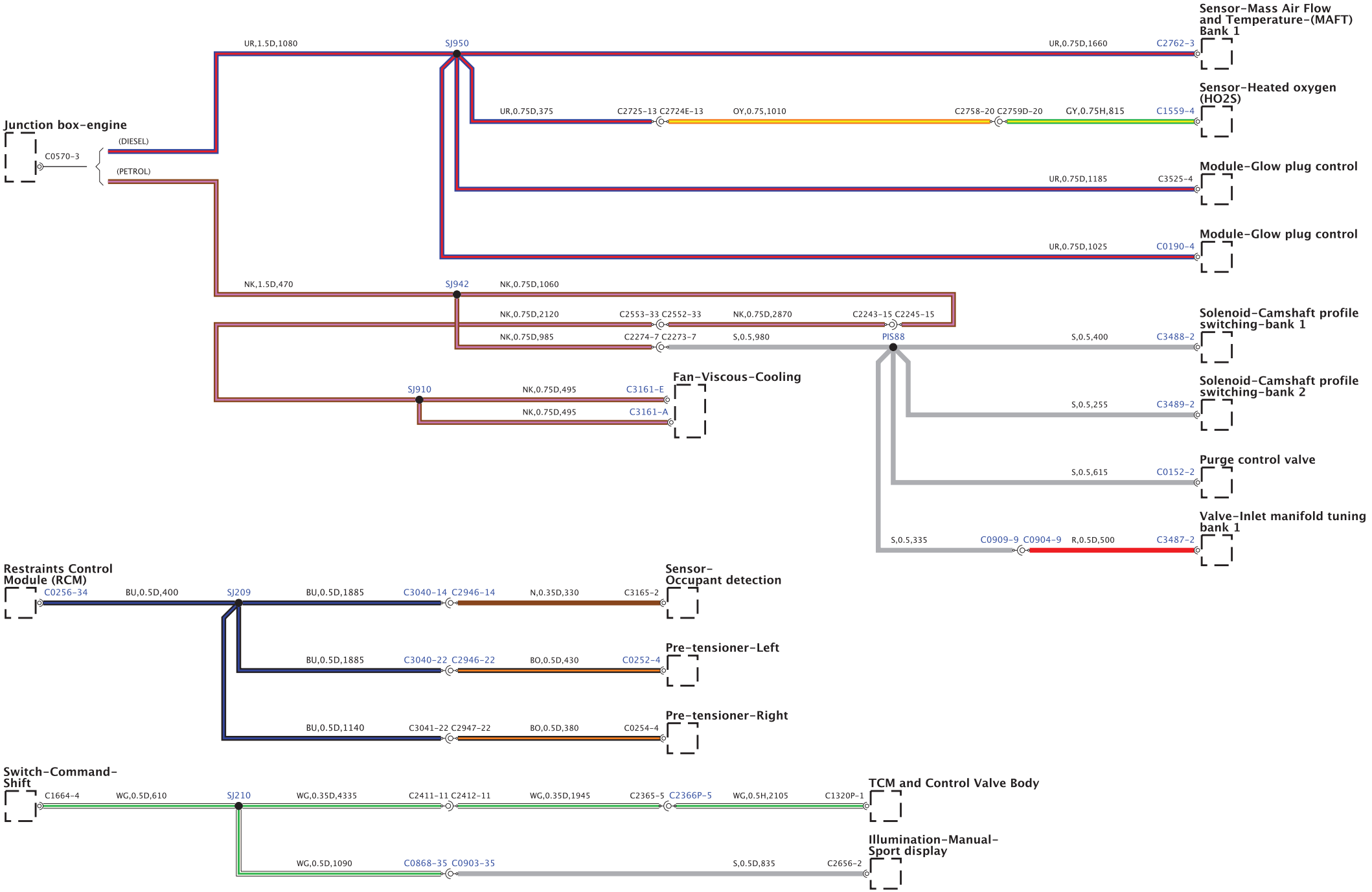

BH42-70010-J-A-03-16-Service (L322-11MY-JOB1)

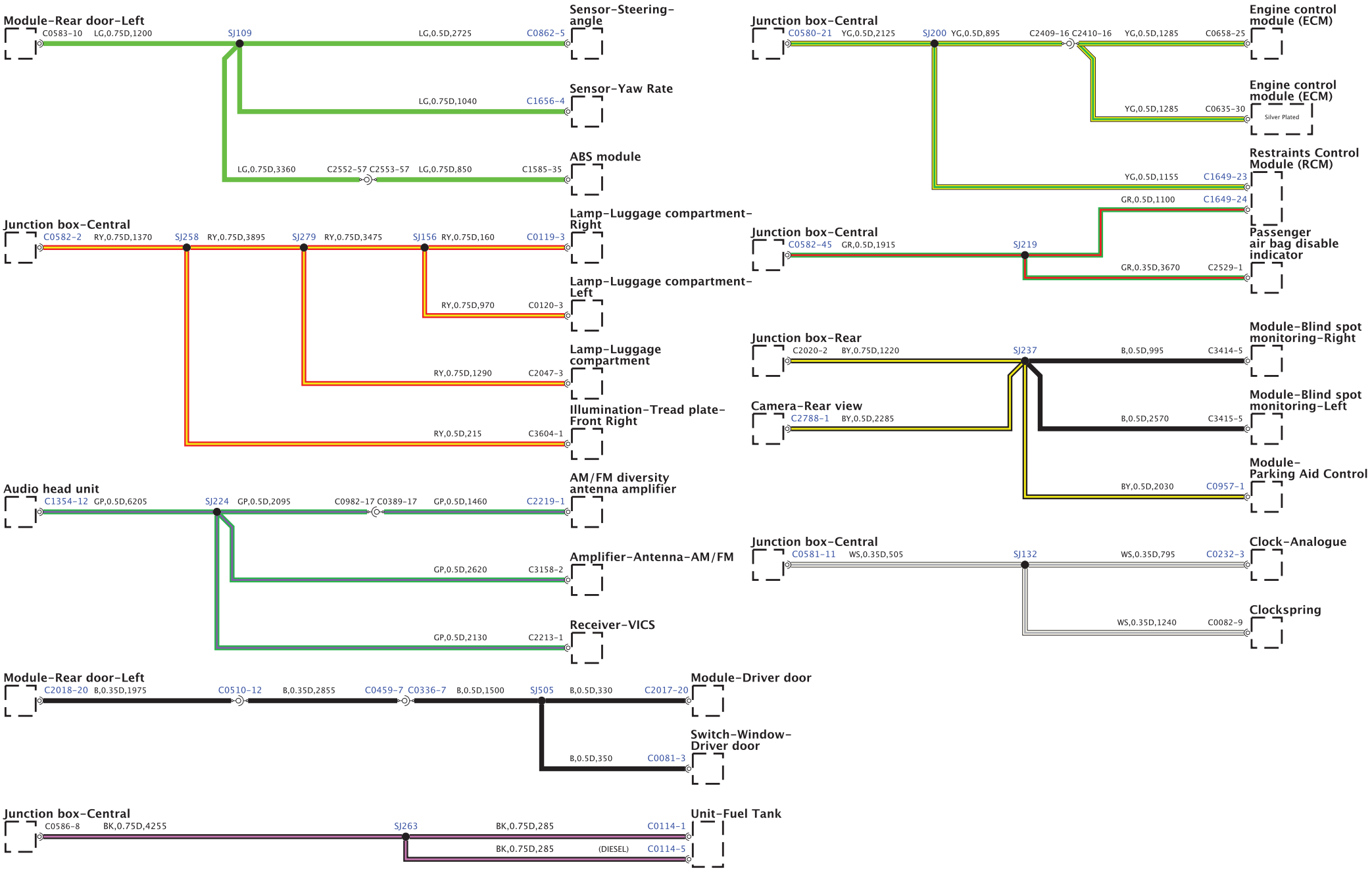

BH42-70010-J-A-04-16-Service (L322-11MY-JOB3)

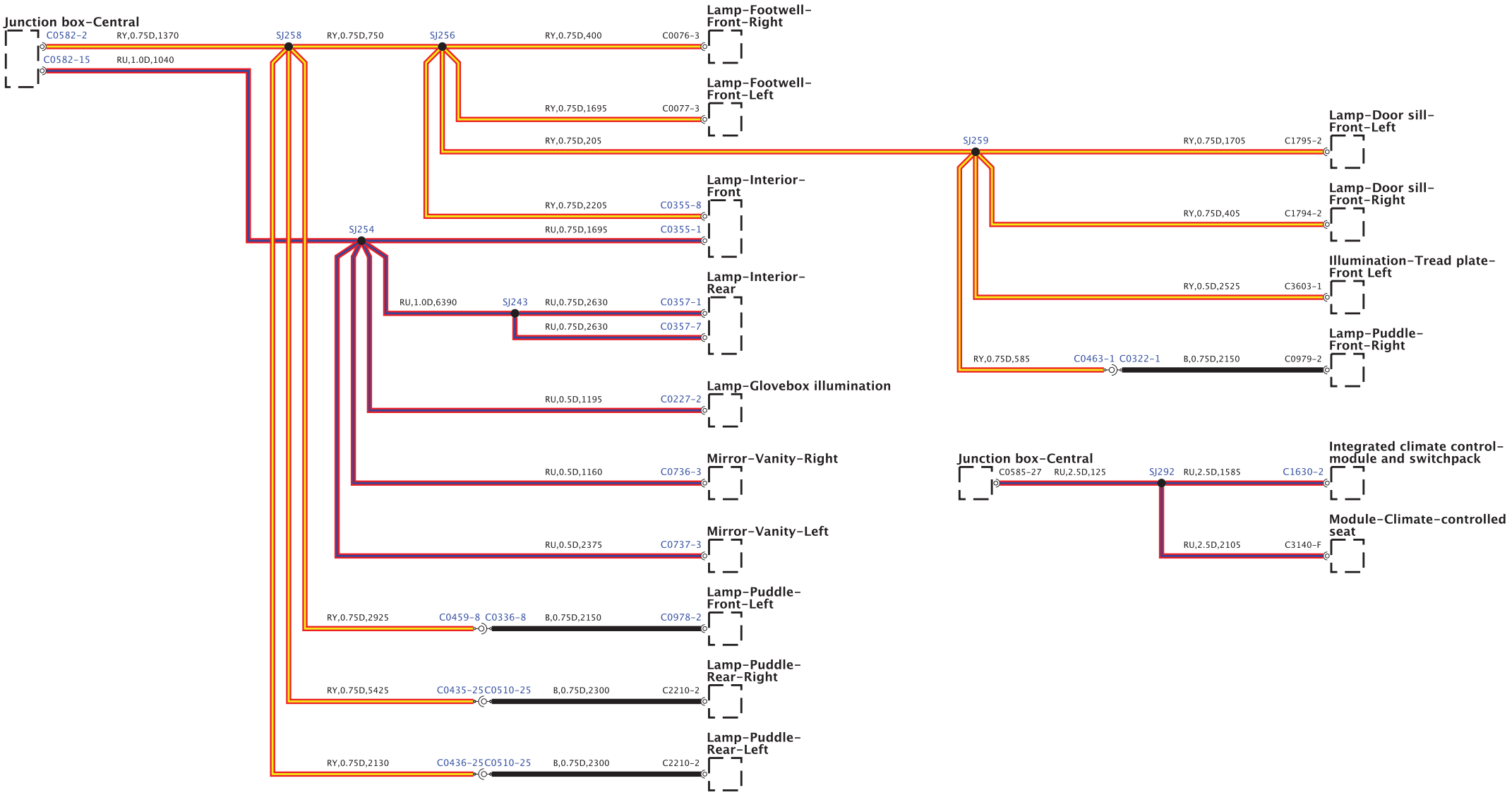

BH42-70010-J-A-05-16-Service (L322-11MY-JOB3)

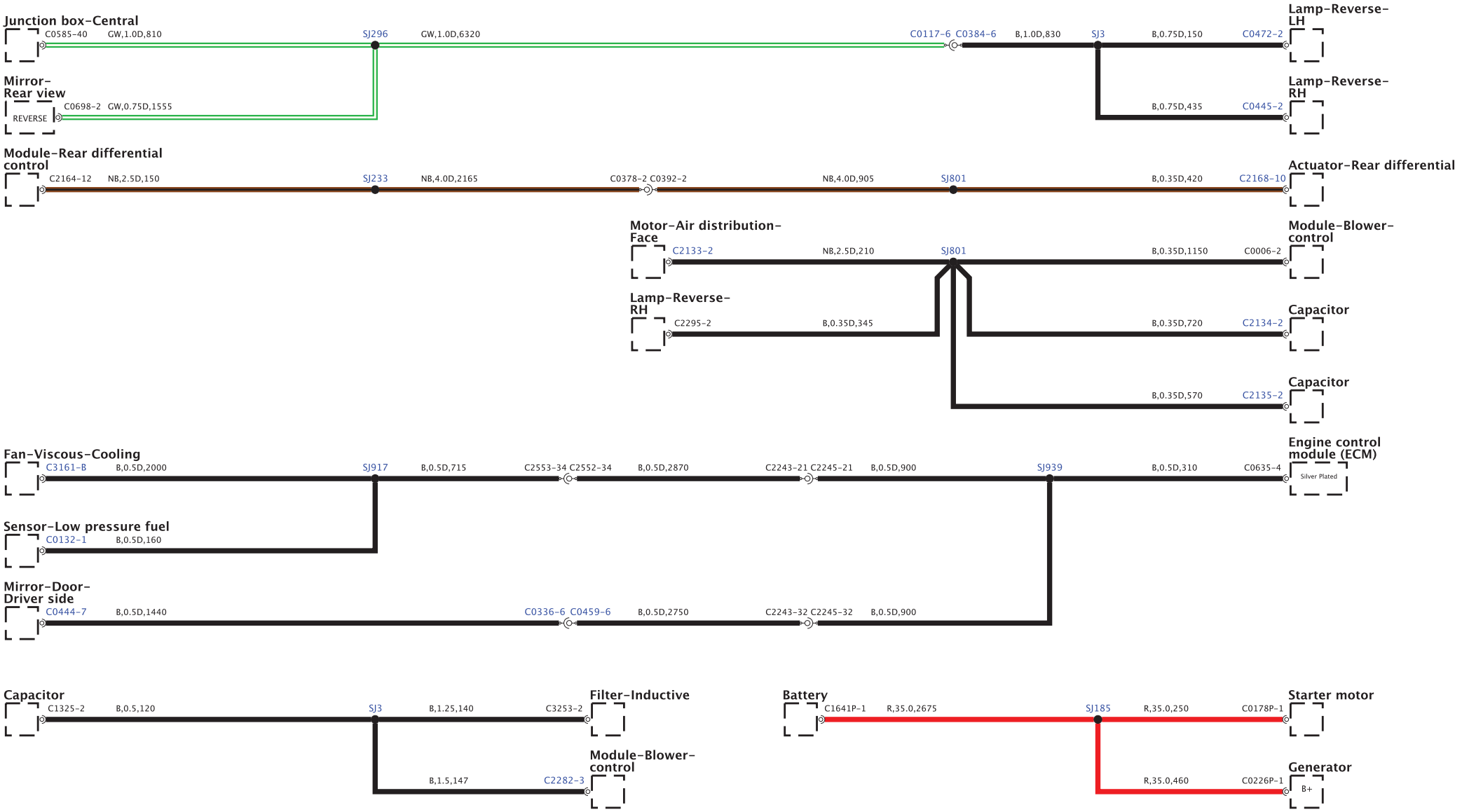

BH62-70010-J-A-06-16-Service (L322-13MY-JOB3)

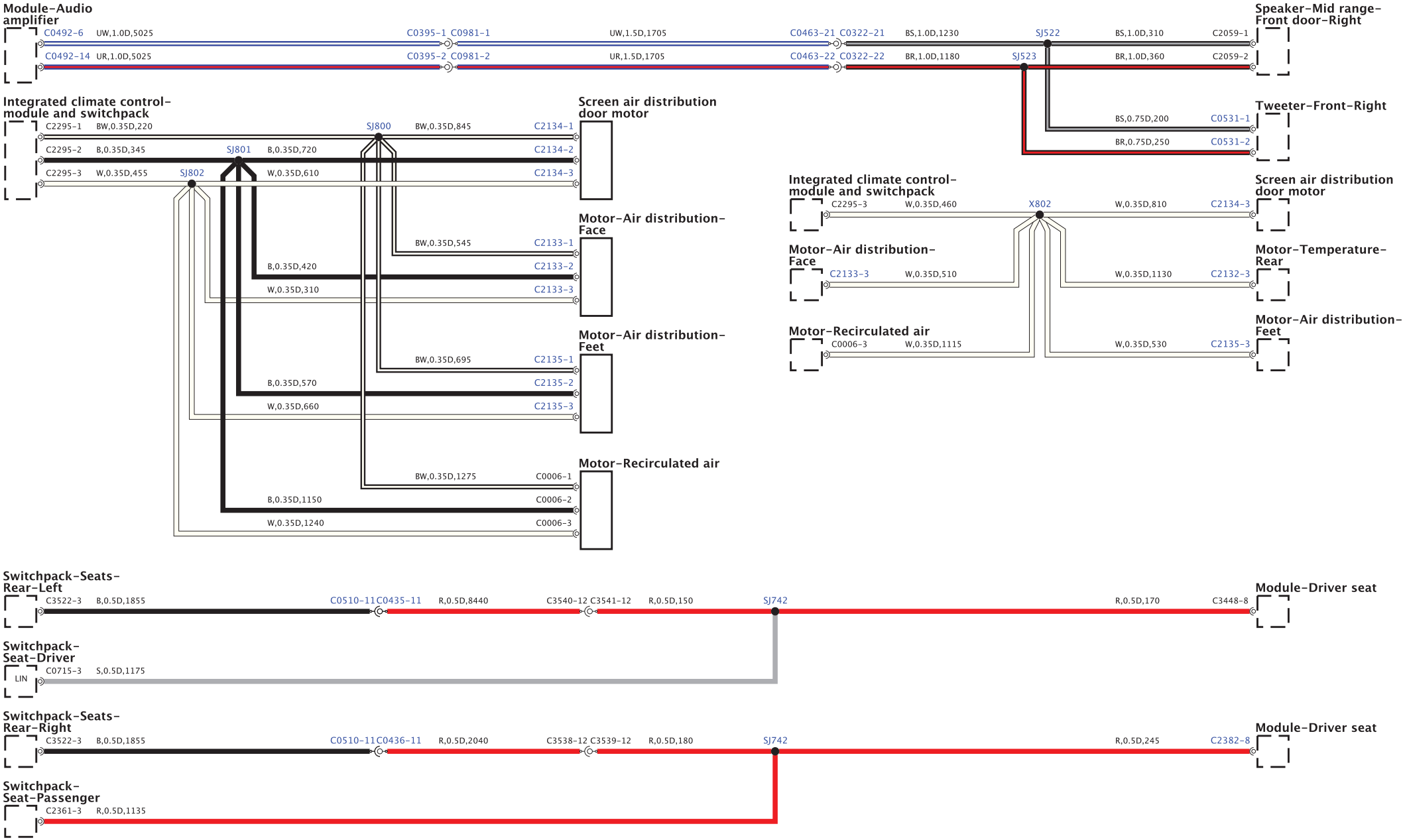

BH42-70010-J-A-07-16-Service (L322-11MY-JOB1)

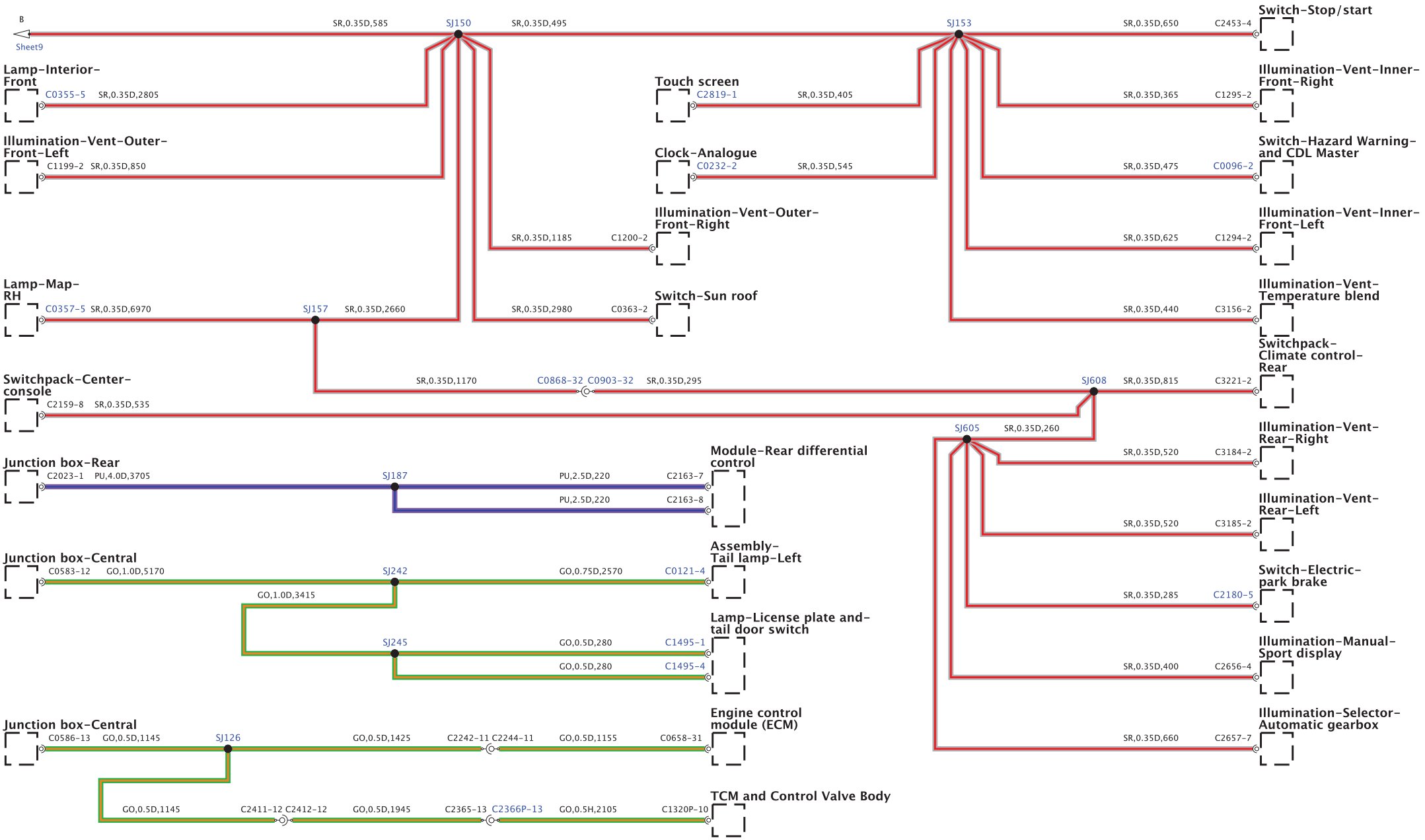

BH42-70010-J-A-08-16-Service (L322-11MY-JOB1)

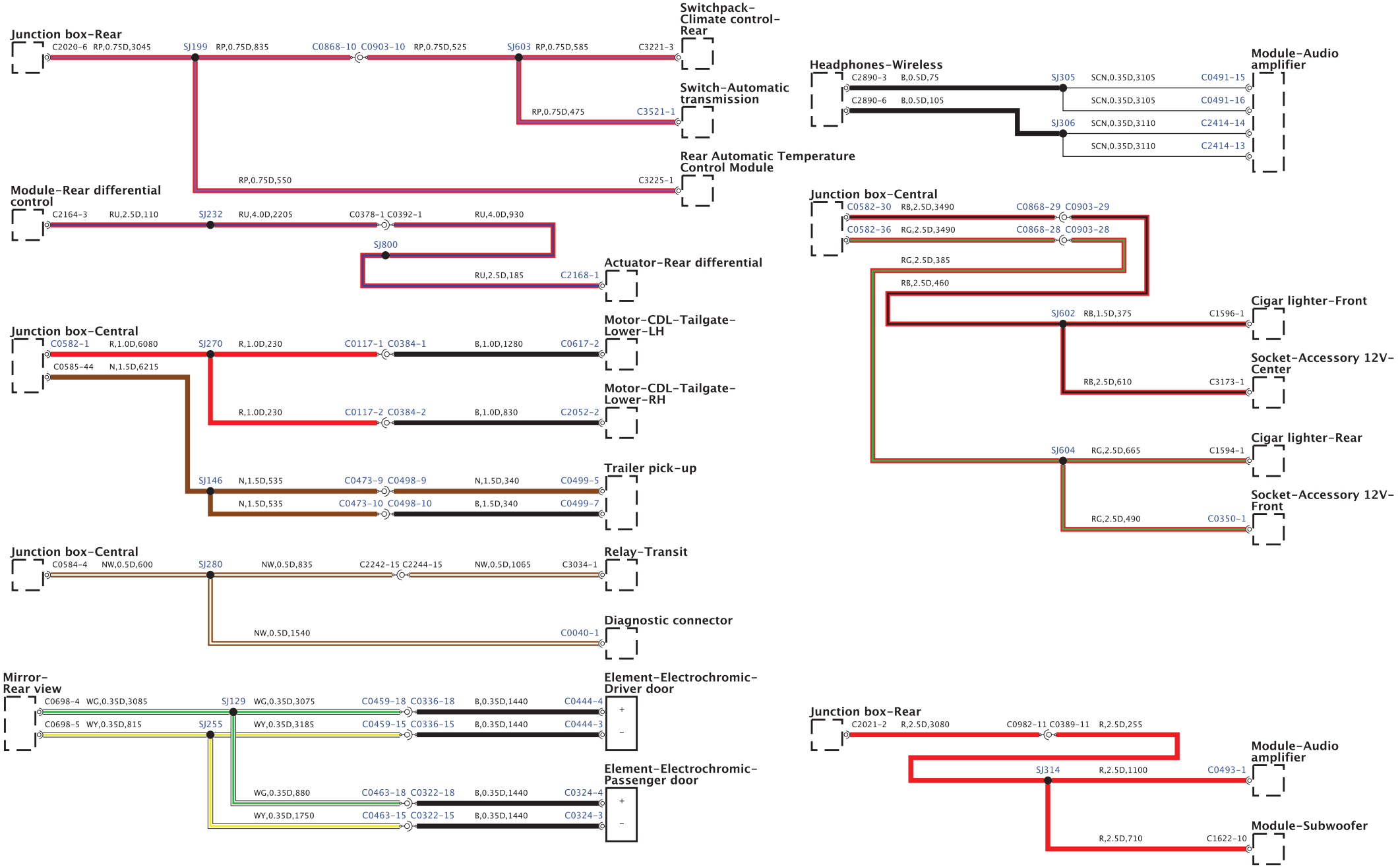

BH42-70010-J-A-10-16-Service (L322-11MY-JOB1)

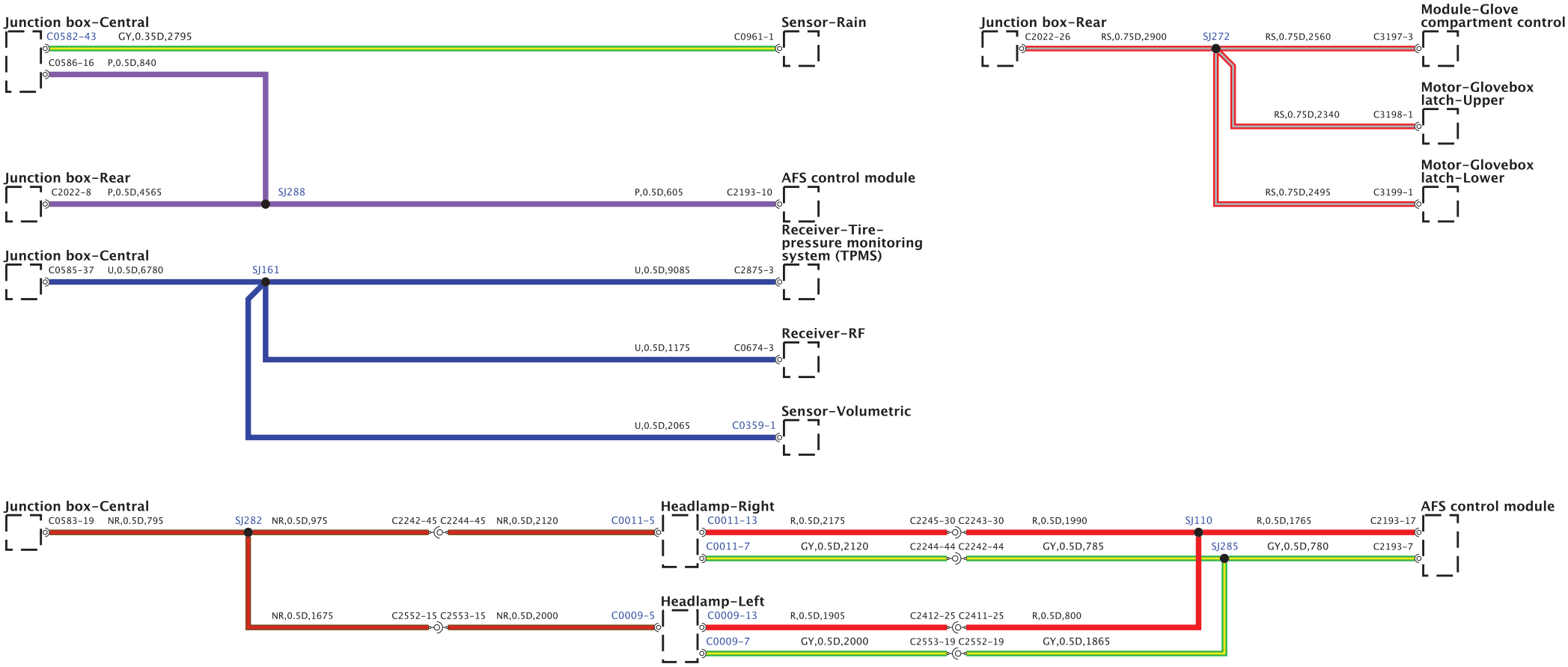

BH42-70010-J-A-11-16-Service (L322-11MY-JOB3)

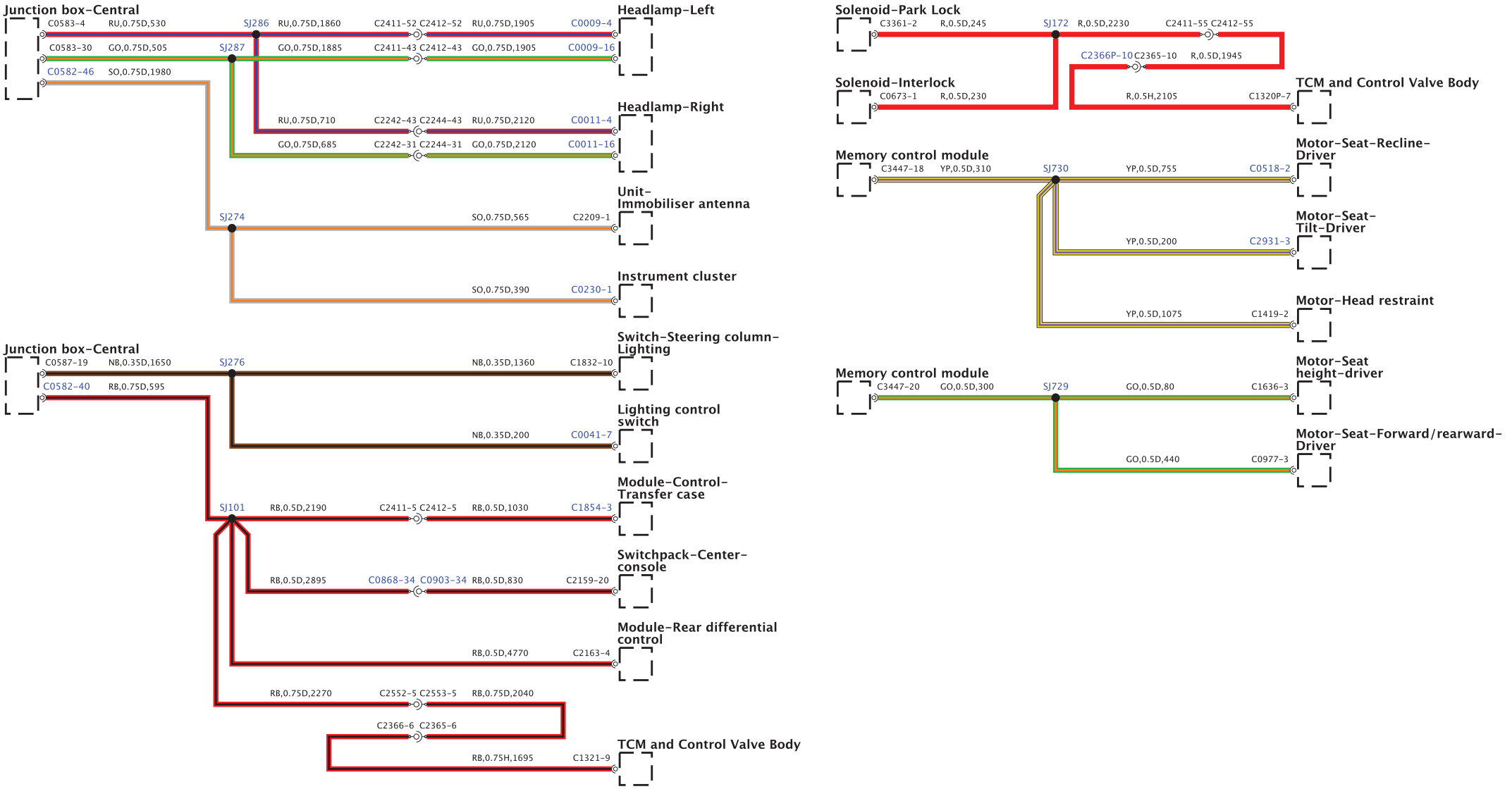

BH42-70010-J-A-12-16-Service (L322-11MY-JOB1)

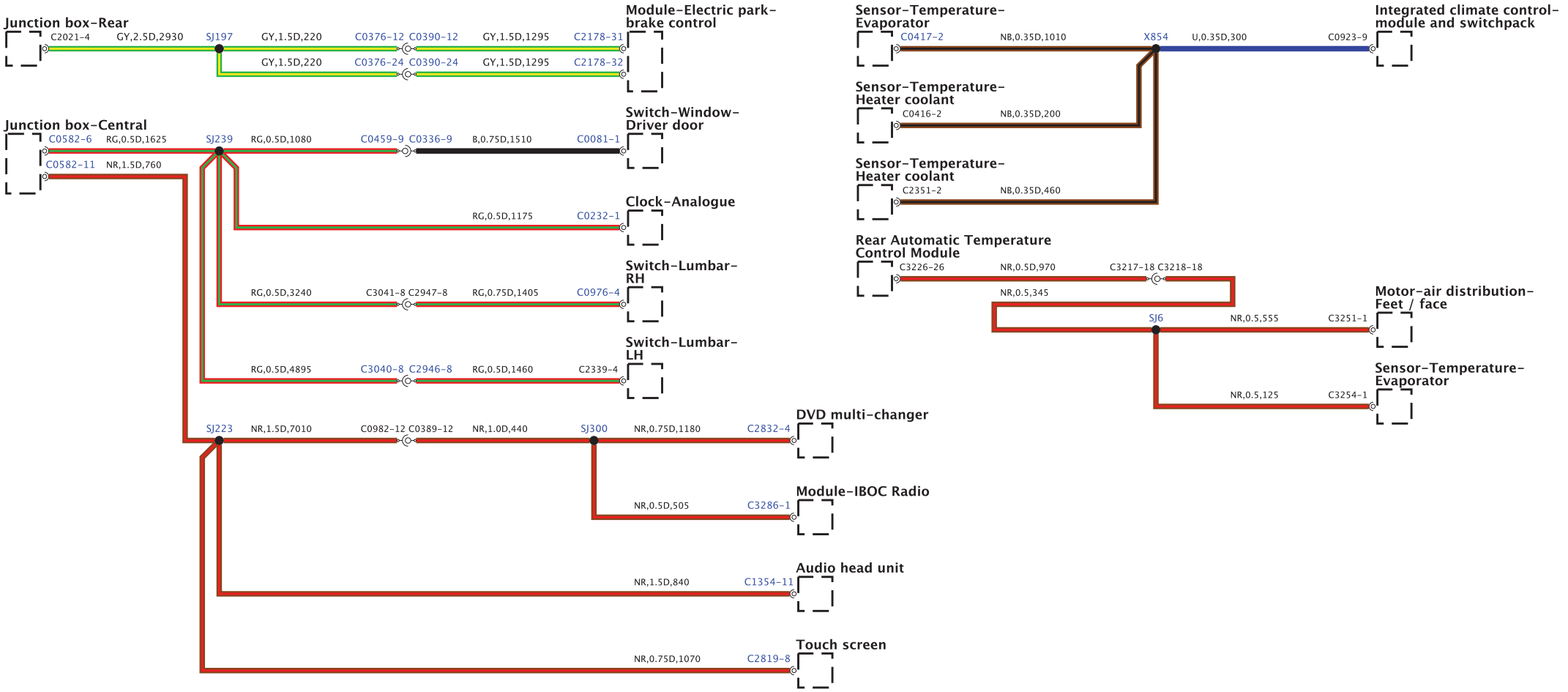

BH42-70010-J-A-13-16-Service (L322-11MY-JOB1)

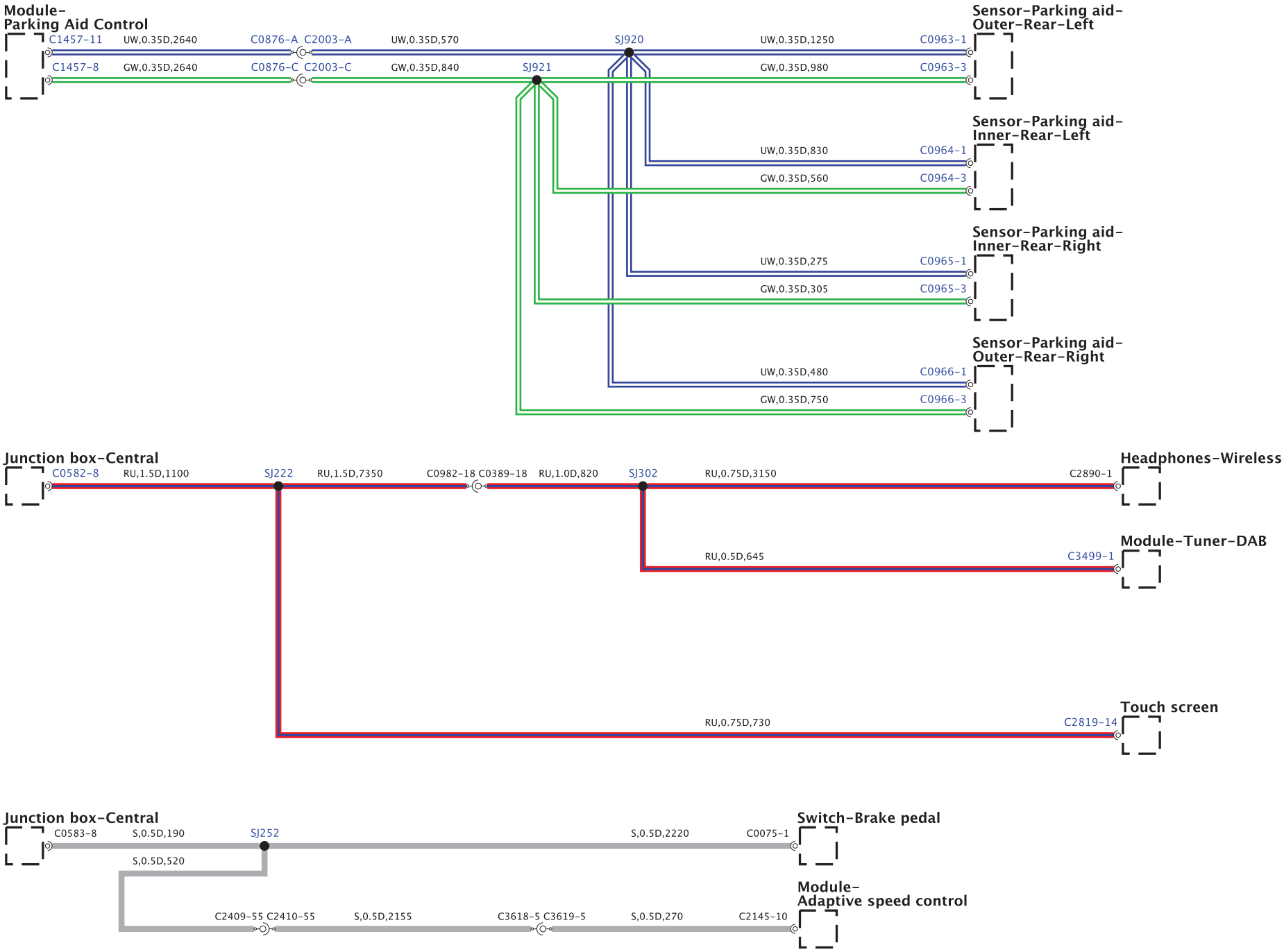

BH42-70010-J-A-14-16-Service (L322-11MY-J081)

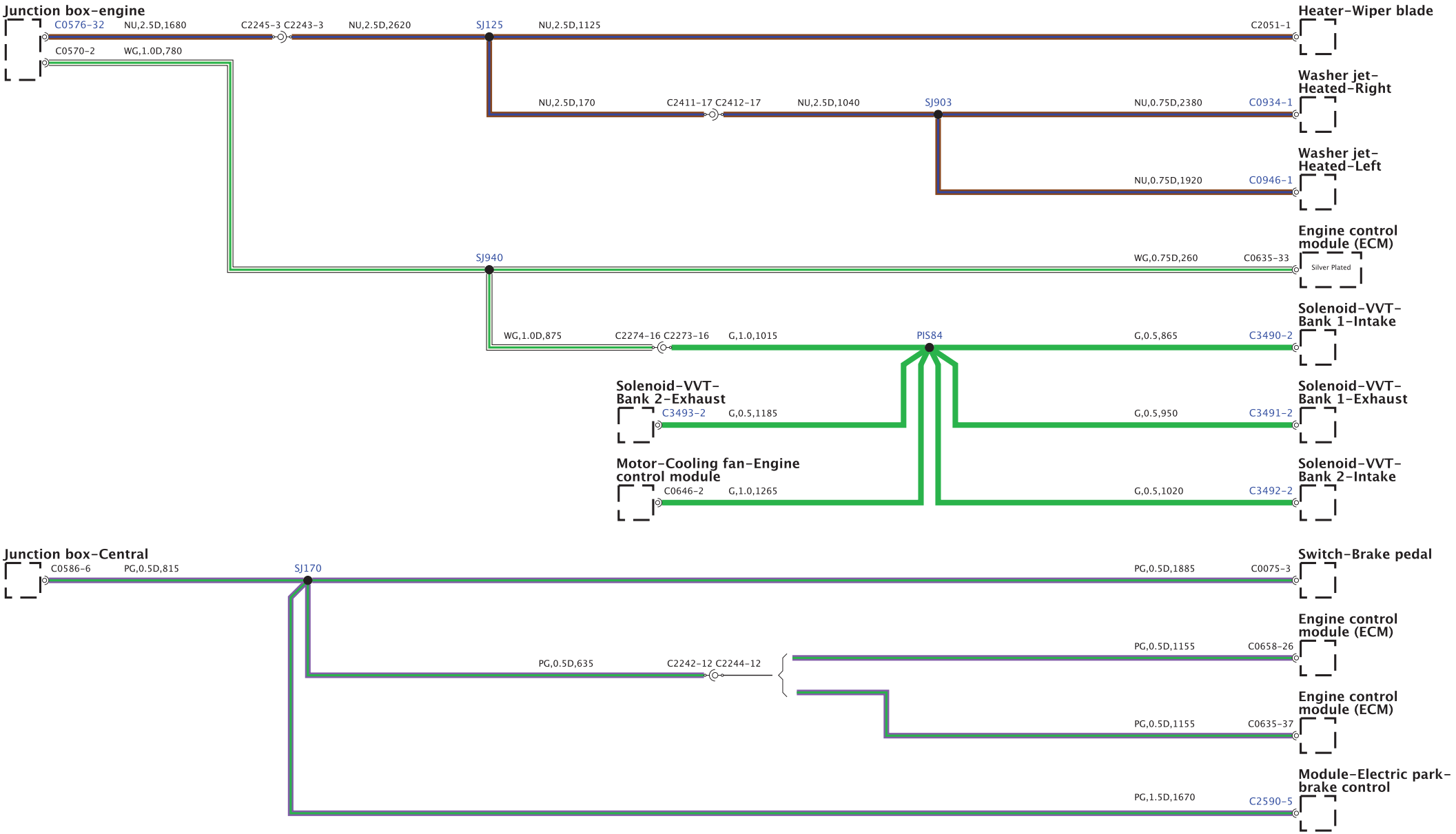

BH42-70010-J-A-15-16-Service (L322-11MY-JOB1)

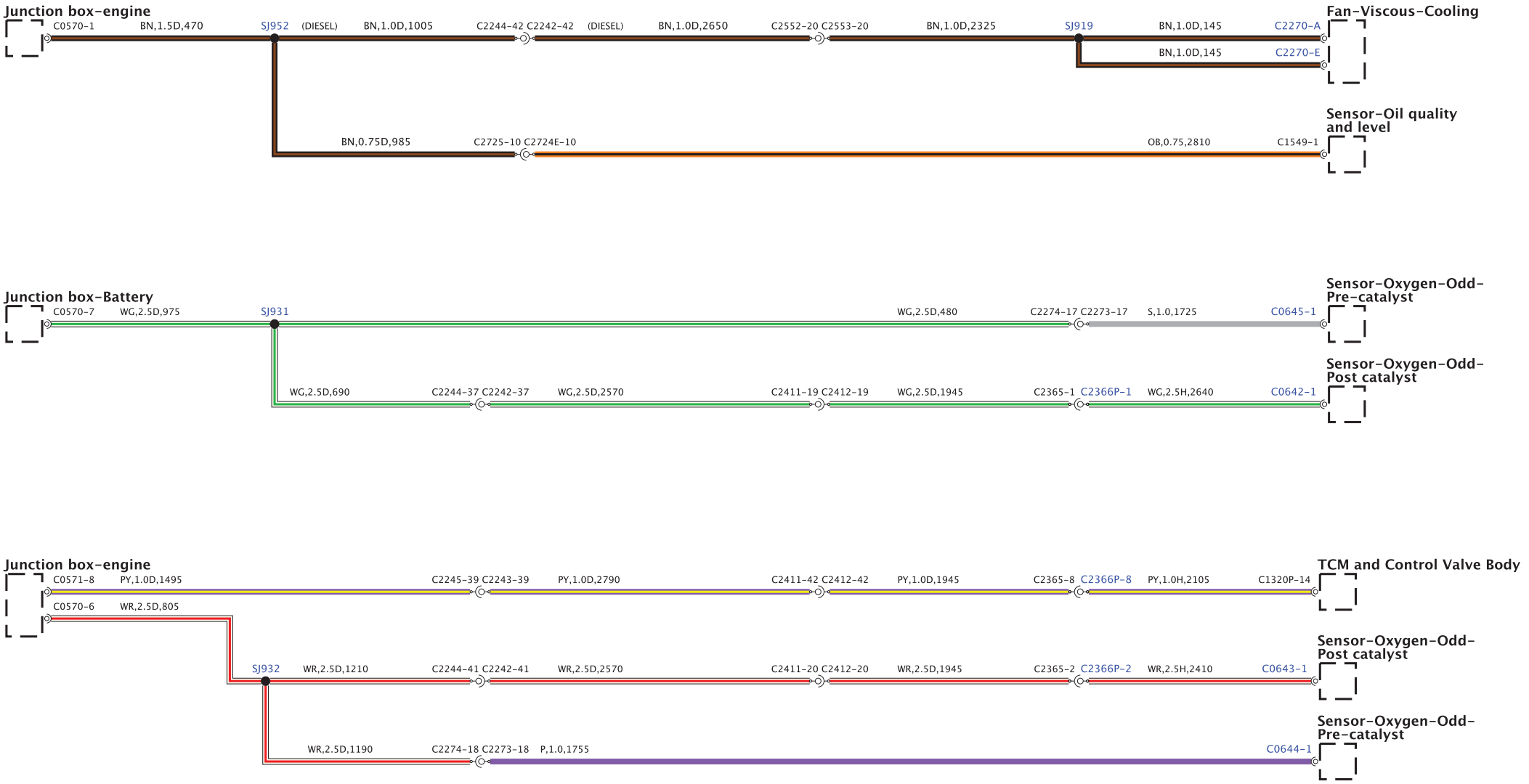

8H42-70010-J-A-16-16-Service (L322-11MY-JOB1)

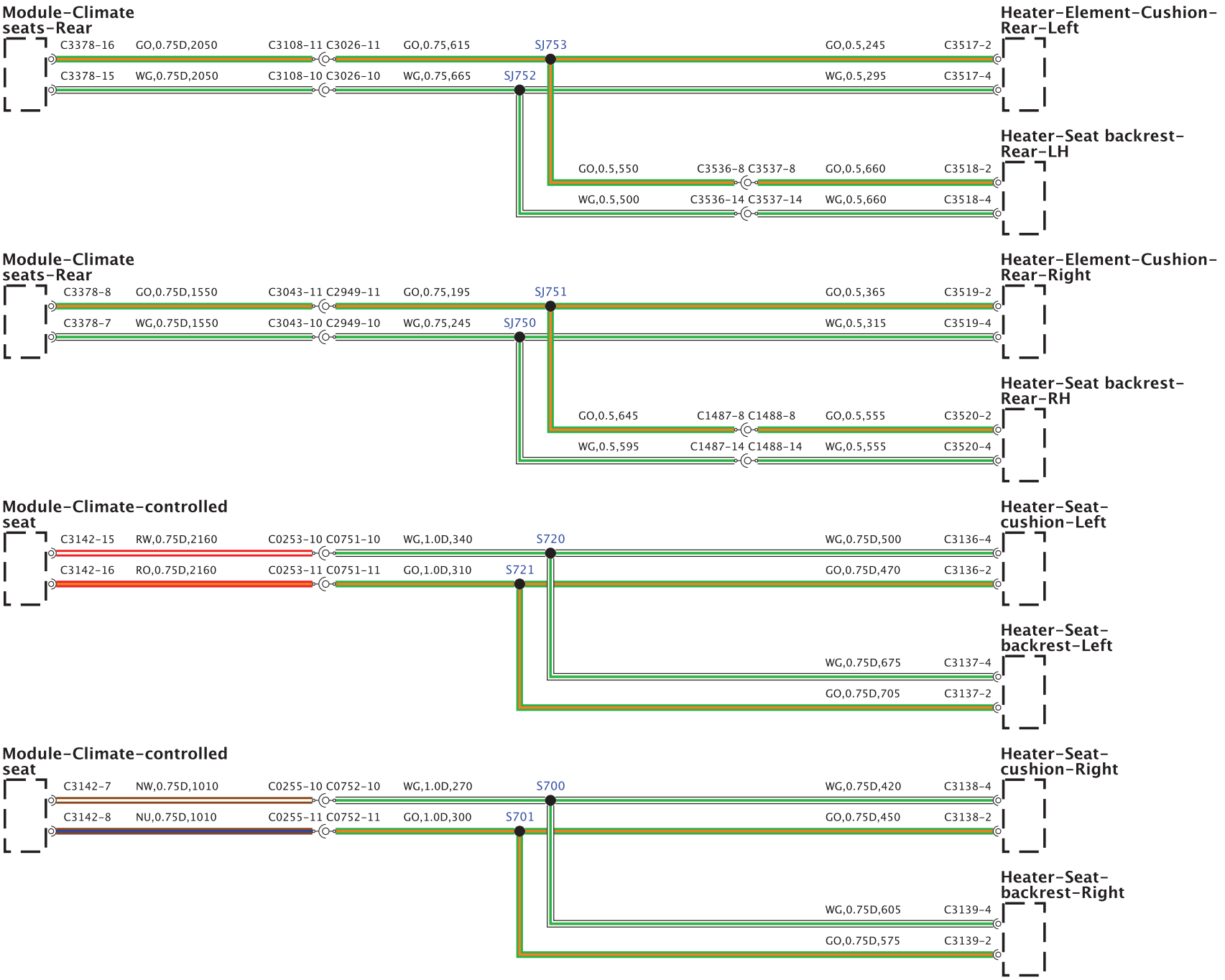

BH42-70022-A-A-01-01-Service (L322-11MY-JOB1)

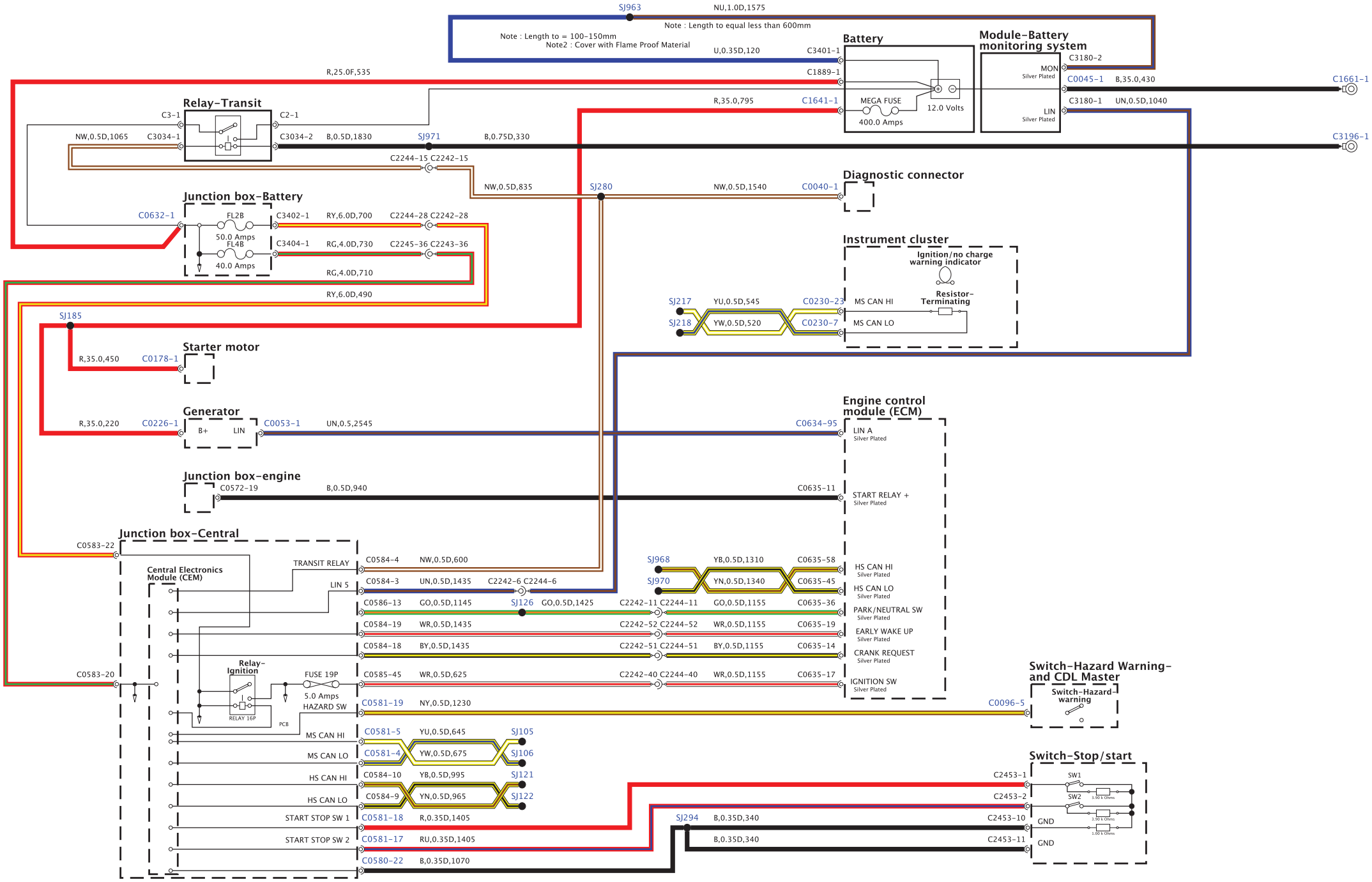

BH42-70022-B-A-01-01-Service (L322-11MY-JOB1)

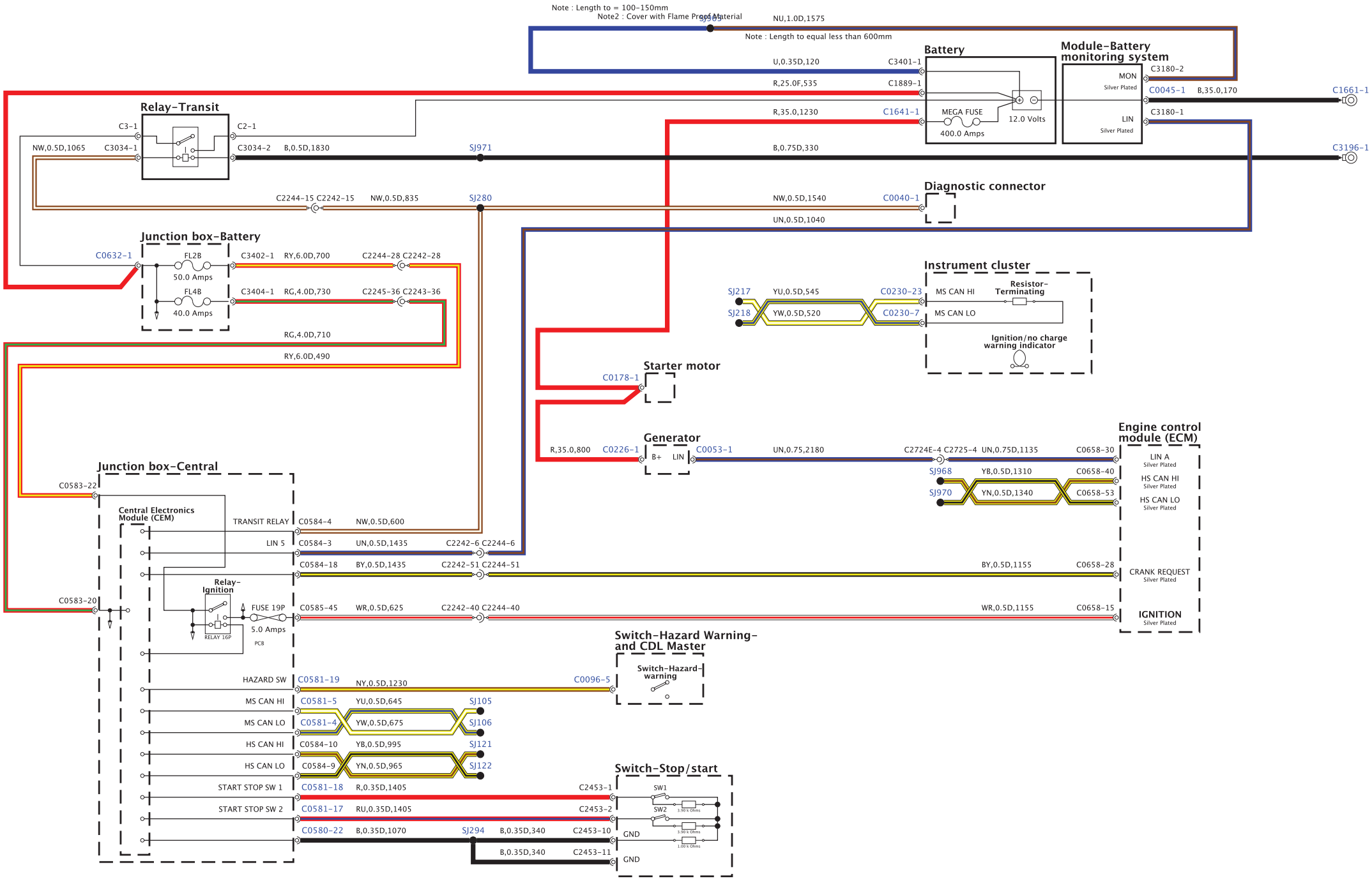

BH42-70441-B-A-01-10-Service (L322-11MY-JOB1)

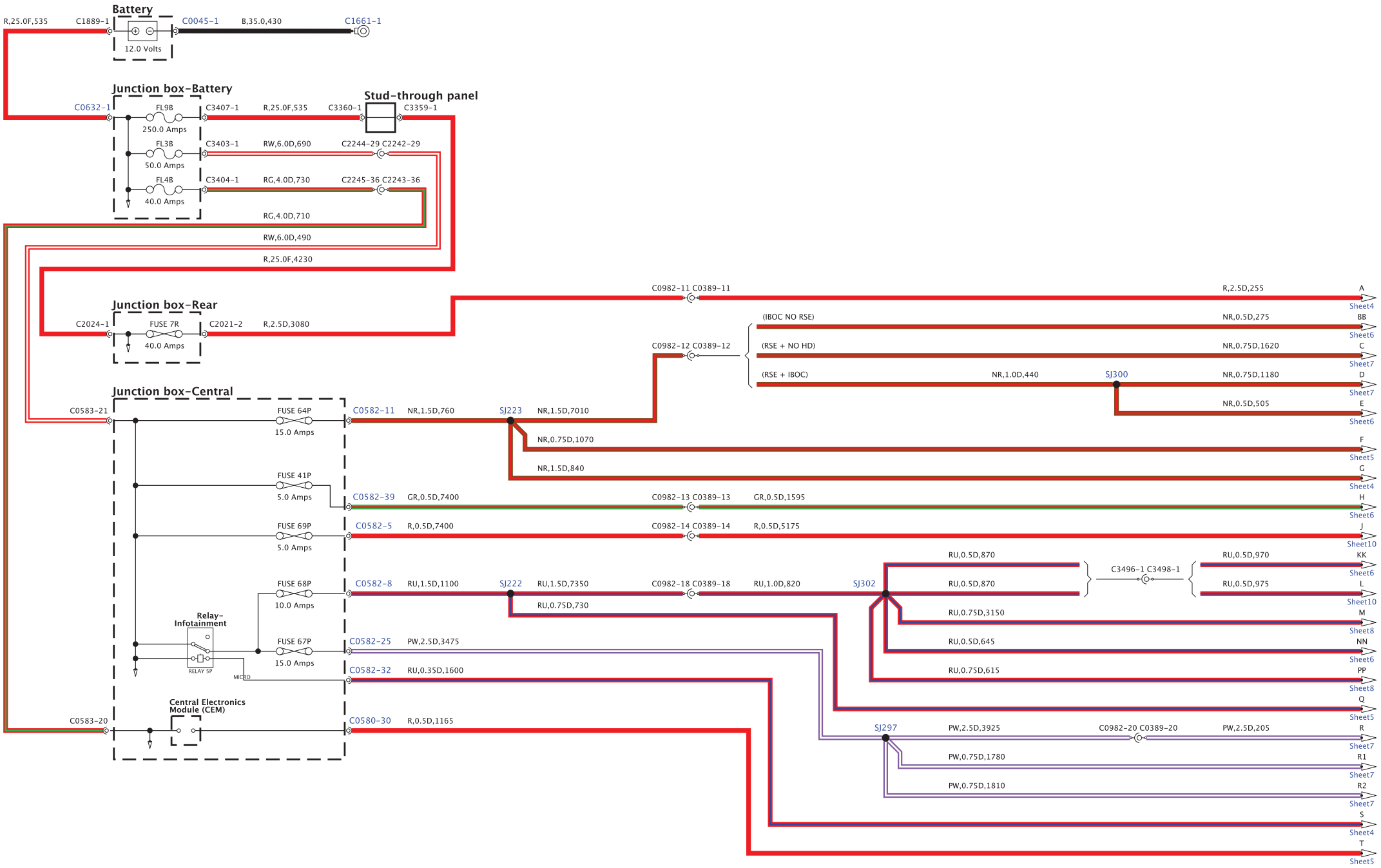

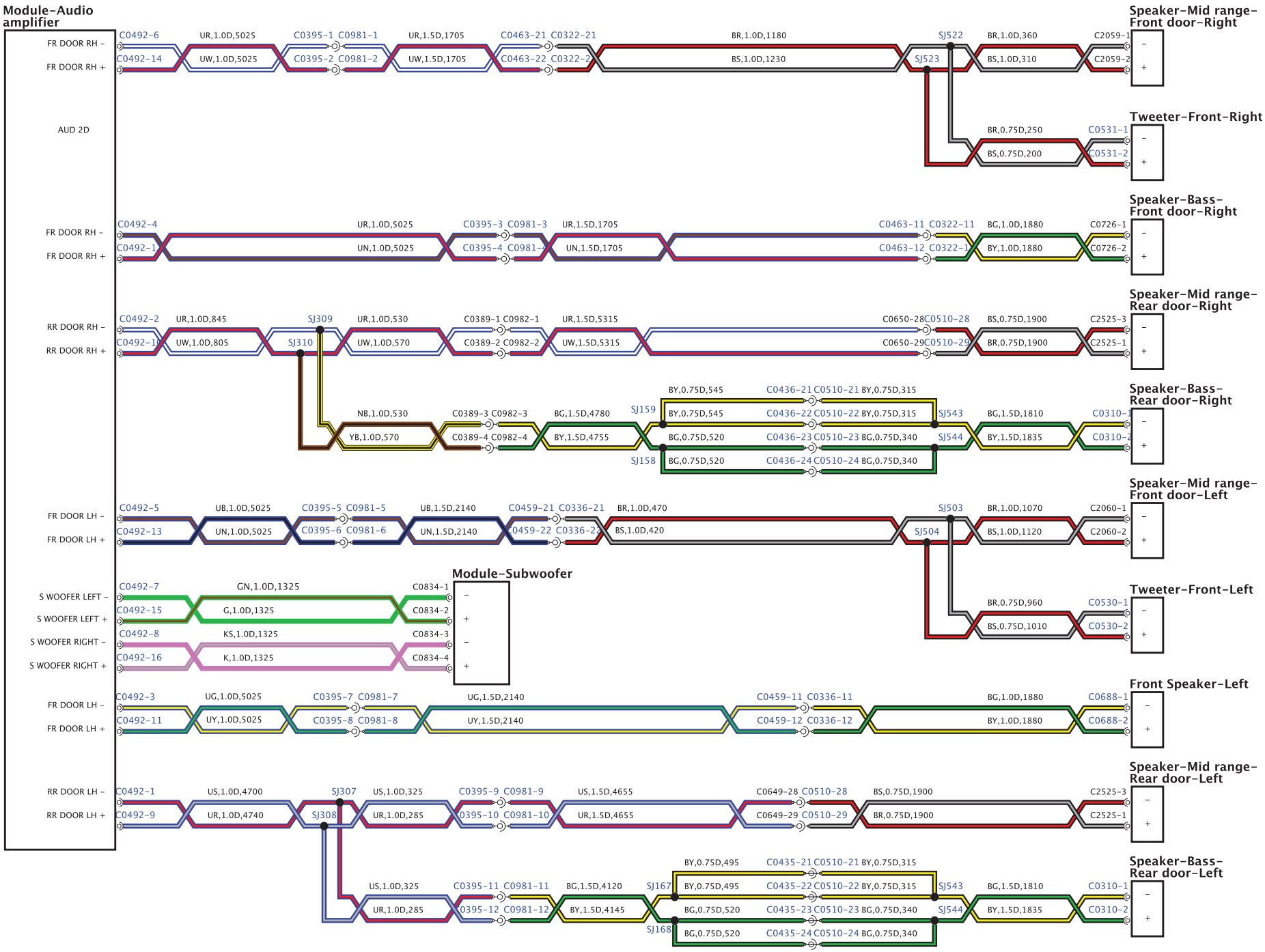
Module-Audio amplifier
FR DOOR RH -
FR DOOR RH +
AUD 2D
RR DOOR RH -
RR DOOR RH +
FR DOOR LH -
FR DOOR LH +
S WOOFER LEFT -
S WOOFER LEFT +
S WOOFER RIGHT -
S WOOFER RIGHT +
RR DOOR LH -
RR DOOR LH +
Module-Subwoofer
Speaker-Mid range-Front door-Right
Tweeter-Front-Right
Speaker-Bass-Front door-Right
Speaker-Mid range-Rear door-Right
Speaker-Bass-Rear door-Right
Speaker-Mid range-Front door-Left
Tweeter-Front-Left
Front Speaker-Left
Speaker-Mid range-Rear door-Left
Speaker-Bass-Rear door-Left


Speaker-Mid range-Front door-Left
C3594-1 BR,1.5D,1535 C0336-21 C0459-21 UB,1.5D,2140 C0981-5 C0395-5 UB,1.5D,5040 C3547-9
C3594-2 BS,1.5D,1535 C0336-22 C0459-22 UN,1.5D,2140 C0981-6 C0395-6 UN,1.5D,5040 C3547-1
Tweeter-Front-Left
C0679-1 BR,1.5D,1450 C0338-2 C0461-2 BR,1.5D,2155 C2476-1 C2478-1 BR,1.5D,5010 C3546-9
C0679-2 BS,1.5D,1450 C0338-1 C0461-1 BS,1.5D,2155 C2476-2 C2478-2 BS,1.5D,5010 C3546-1
Speaker-Bass-Front door-Left
C1172-1 BG,1.5D,2015 C0336-11 C0459-11 UG,1.5D,2140 C0981-7 C0395-7 UG,1.5D,5010 C3546-10
C1172-2 BY,1.5D,2015 C0336-12 C0459-12 UY,1.5D,2140 C0981-8 C0395-8 UY,1.5D,5010 C3546-2
Speaker-Mid range-Rear door-Left
C2526-2 BS,1.5D,1880 C0510-28 C0649-28 US,1.5D,4655 C0981-9 C0395-9 US,1.5D,5010 C3546-5
C2526-1 BR,1.5D,1880 C0510-29 C0649-29 UR,1.5D,4655 C0981-10 C0395-10 UR,1.5D,5010 C3546-13
BG,1.5D,4120 C0981-11 C0395-11 UN,1.5D,5010 C3546-14
BY,1.5D,4145 C0981-12 C0395-12 UG,1.5D,5010 C3546-6
Speaker-Bass-Rear door-Left
C0310-1 BG,1.5D,1810 SJ543 BY,0.75D,315 C0510-21 C0435-21 BY,0.75D,495 SJ167
C0310-2 BY,1.5D,1835 SJ544 BG,0.75D,340 C0510-23 C0435-23 BG,0.75D,520 SJ168
BY,0.75D,315 C0510-22 C0435-22 BY,0.75D,495
BG,0.75D,340 C0510-24 C0435-24 BG,0.75D,520
Left rear surround sound speaker
C2503-1 GW,1.5D,1225 C3547-13
C2503-2 G,1.5D,1225 C3547-5
Center speaker
C3153-1 N,1.5D,5400 C3547-15
C3153-2 Y,1.5D,5400 C3547-7
Module-Subwoofer
C0834-1 GN,1.5D,1340 C3547-11
C0834-2 G,1.5D,1340 C3547-3
C0834-3 KS,1.5D,1340 C3547-12
C0834-4 K,1.5D,1340 C3547-4
Module-Audio amplifier
FR DOOR LH -
FR DOOR LH +
FR DOOR RH -
FR DOOR RH +
FR DOOR LH -
FR DOOR LH +
FR DOOR RH -
FR DOOR RH +
FR DOOR LH -
FR DOOR LH +
FR DOOR RH -
FR DOOR RH +
RR DOOR LH +
RR DOOR LH -
RR DOOR RH +
RR DOOR RH -
RR DOOR LH -
RR DOOR LH +
RR DOOR RH -
RR DOOR RH +
AUD3-16
SURROUND -
SURROUND -
SURROUND +
SURROUND +
SPK CENTRE -
SPK CENTRE +
SW1-
SW1+
SW2-
SW2+
Speaker-Mid range-Front door-Right
C3547-10 UR,1.5D,5040 C0395-1 C0981-1 UR,1.5D,1705 C0463-21 C0322-21 BR,1.5D,1535 C3593-1
C3547-2 UW,1.5D,5040 C0395-2 C0981-2 UW,1.5D,1705 C0463-22 C0322-22 BS,1.5D,1535 C3593-2
Tweeter-Front-Right
C3546-11 BR,1.5D,5010 C2478-3 C2476-3 BR,1.5D,1705 C0463-8 C0322-8 BR,1.5D,1410 C0680-1
C3546-3 BS,1.5D,5010 C2478-4 C2476-4 BS,1.5D,1705 C0463-9 C0322-9 BS,1.5D,1410 C0680-2
Speaker-Bass-Front door-Right
C3546-12 UR,1.5D,5010 C0395-3 C0981-3 UR,1.5D,1705 C0463-11 C0322-11 BG,1.5D,2015 C1173-1
C3546-4 UN,1.5D,5010 C0395-4 C0981-4 UN,1.5D,1705 C0463-12 C0322-12 BY,1.5D,2015 C1173-2
Speaker-Mid range-Rear door-Right
C3546-7 UR,1.5D,1360 C0389-1 C0982-1 UR,1.5D,5315 C0650-28 C0510-28 BS,1.5D,1880 C2526-2
C3546-15 UW,1.5D,1360 C0389-2 C0982-2 UW,1.5D,5315 C0650-29 C0510-29 BR,1.5D,1880 C2526-1
SJ159 BY,0.75D,545 C0436-21 C0510-21 BY,0.75D,315 SJ543
BY,0.75D,545 C0436-22 C0510-22 BY,0.75D,315
Speaker-Bass-Rear door-Right
C3546-16 NB,1.5D,1360 C0389-3 C0982-3 BG,1.5D,4780
C3546-8 YB,1.5D,1360 C0389-4 C0982-4 BY,1.5D,4755
BG,1.5D,1810 C0310-1
BY,1.5D,1835 C0310-2
SJ158 BG,0.75D,520 C0436-23 C0510-23 BG,0.75D,340 SJ544
BG,0.75D,520 C0436-24 C0510-24 BG,0.75D,340
Right rear surround sound speaker
C3547-14 GW,1.5D,1390 C0389-5 C0982-5 GW,1.5D,2900 C2502-1
C3547-6 G,1.5D,1390 C0389-6 C0982-6 G,1.5D,2900 C2502-2

BH42-70441-B-A-04-10-Service (L322-13MY-JO81)

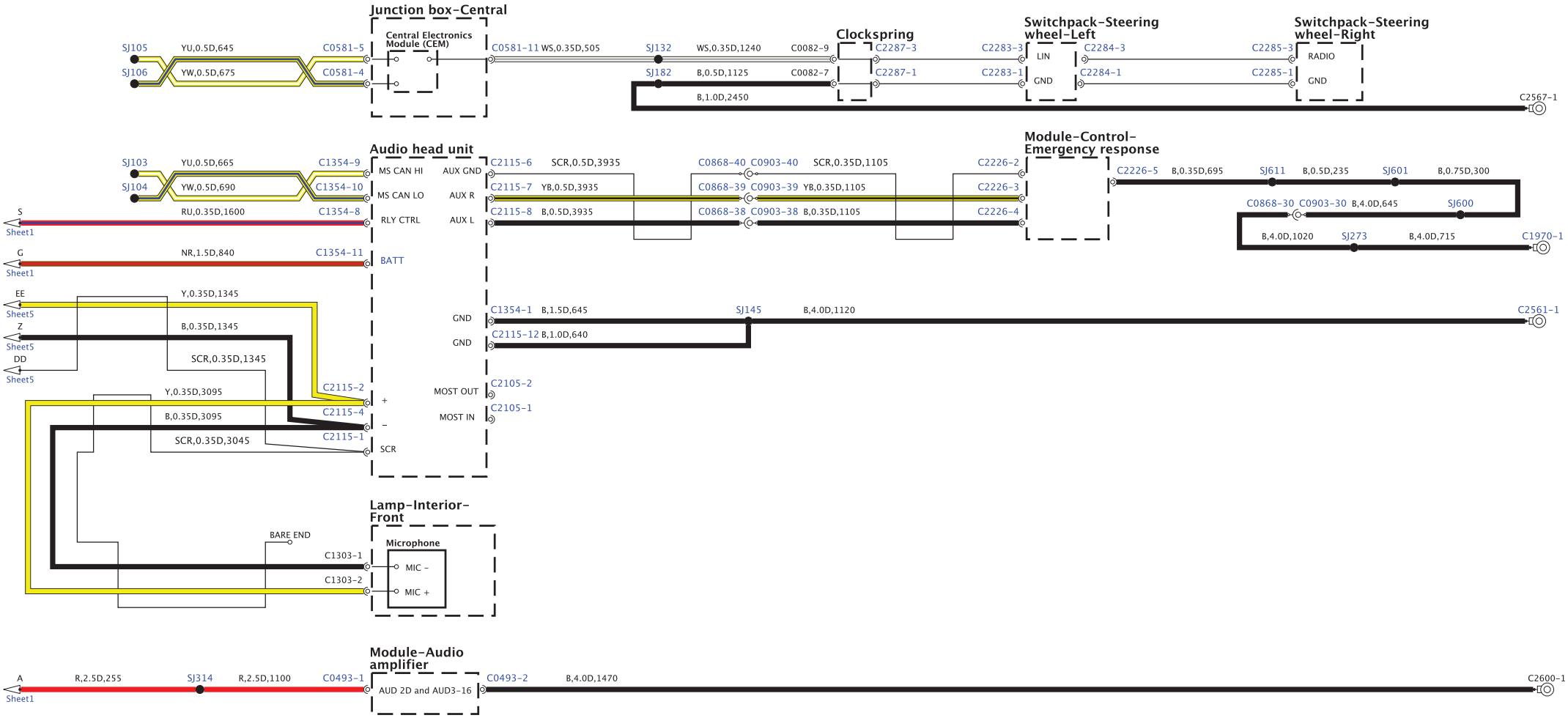

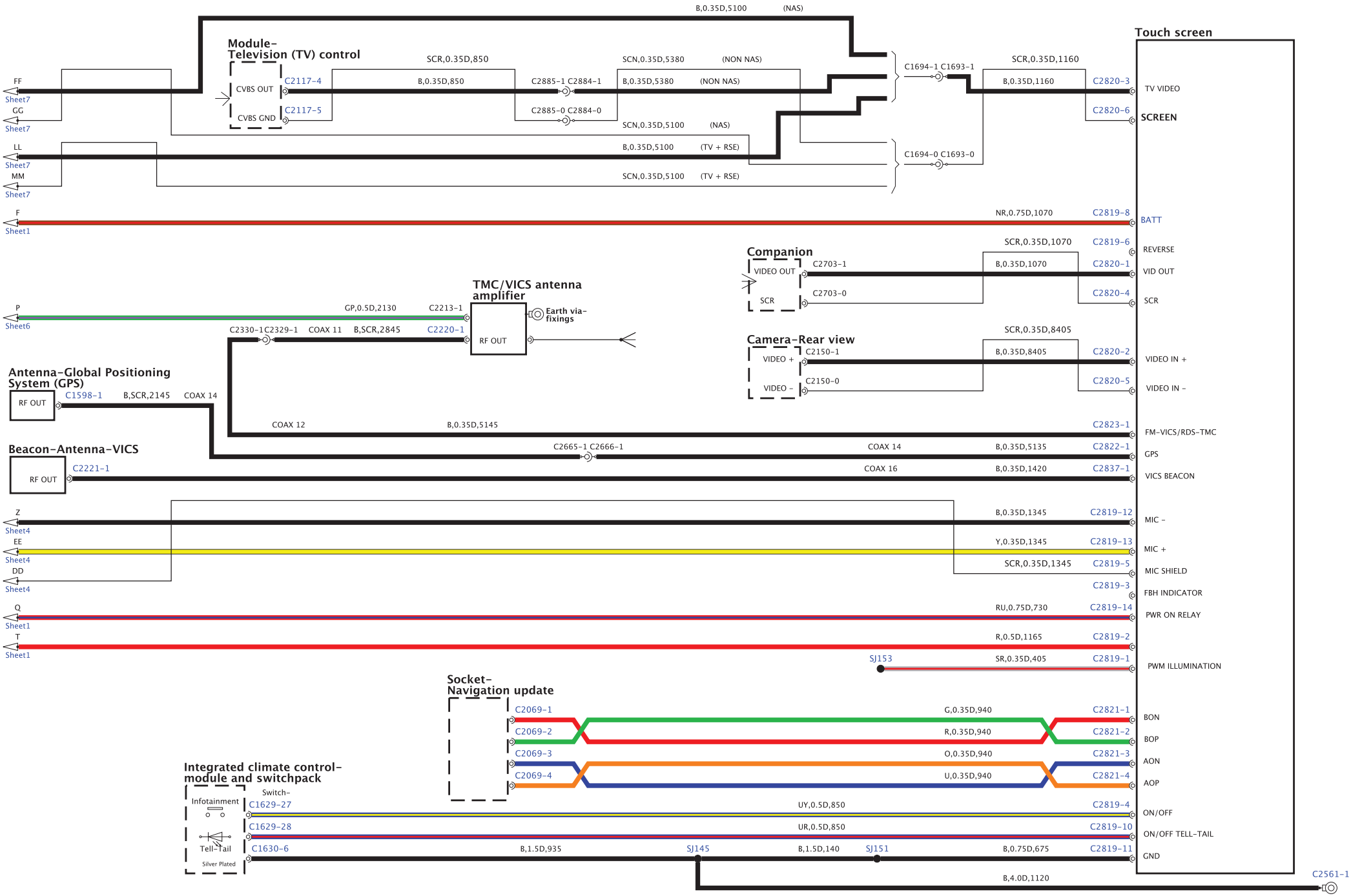
Touch screen
Module-Television (TV) control
CVBS OUT
CVBS GND
C2117-4
C2117-5
SCR,0.35D,850
B,0.35D,850
C2885-1 C2884-1
C2885-0 C2884-0
SCN,0.35D,5380 (NON NAS)
B,0.35D,5380 (NON NAS)
SCN,0.35D,5100 (NAS)
B,0.35D,5100 (TV + RSE)
SCN,0.35D,5100 (TV + RSE)
B,0.35D,5100 (NAS)
C1694-1 C1693-1
C1694-0 C1693-0
SCR,0.35D,1160
B,0.35D,1160
C2820-3
TV VIDEO
C2820-6
SCREEN
FF
GG
LL
MM
Sheet7
F
Sheet1
NR,0.75D,1070
C2819-8
BATT
Companion
VIDEO OUT
SCR
C2703-1
C2703-0
SCR,0.35D,1070
B,0.35D,1070
C2819-6
REVERSE
C2820-1
VID OUT
C2820-4
SCR
TMC/VICS antenna amplifier
RF OUT
Earth via-fixings
P
Sheet6
GP,0.5D,2130
C2213-1
C2330-1 C2329-1
COAX 11
B,SCR,2845
C2220-1
Camera-Rear view
VIDEO +
VIDEO -
C2150-1
C2150-0
SCR,0.35D,8405
B,0.35D,8405
C2820-2
VIDEO IN +
C2820-5
VIDEO IN -
Antenna-Global Positioning System (GPS)
RF OUT
C1598-1
B,SCR,2145
COAX 14
COAX 12
B,0.35D,5145
C2823-1
FM-VICS/RDS-TMC
Beacon-Antenna-VICS
RF OUT
C2221-1
C2665-1 C2666-1
COAX 14
B,0.35D,5135
C2822-1
GPS
COAX 16
B,0.35D,1420
C2837-1
VICS BEACON
Z
EE
DD
Sheet4
B,0.35D,1345
C2819-12
MIC -
Y,0.35D,1345
C2819-13
MIC +
SCR,0.35D,1345
C2819-5
MIC SHIELD
C2819-3
FBH INDICATOR
Q
T
Sheet1
RU,0.75D,730
C2819-14
PWR ON RELAY
R,0.5D,1165
C2819-2
SJ153
SR,0.35D,405
C2819-1
PWM ILLUMINATION
Socket-Navigation update
C2069-1
C2069-2
C2069-3
C2069-4
G,0.35D,940
R,0.35D,940
O,0.35D,940
U,0.35D,940
C2821-1
BON
C2821-2
BOP
C2821-3
AON
C2821-4
AOP
Integrated climate control-module and switchpack
Infotainment
Tell-Tail
Silver Plated
Switch-
C1629-27
C1629-28
C1630-6
UY,0.5D,850
UR,0.5D,850
C2819-4
ON/OFF
C2819-10
ON/OFF TELL-TAIL
B,1.5D,935
SJ145
B,1.5D,140
SJ151
B,0.75D,675
C2819-11
GND
B,4.0D,1120
C2561-1

BH42-70441-B-A-06-10-Service (L322-11MY-JOB1)

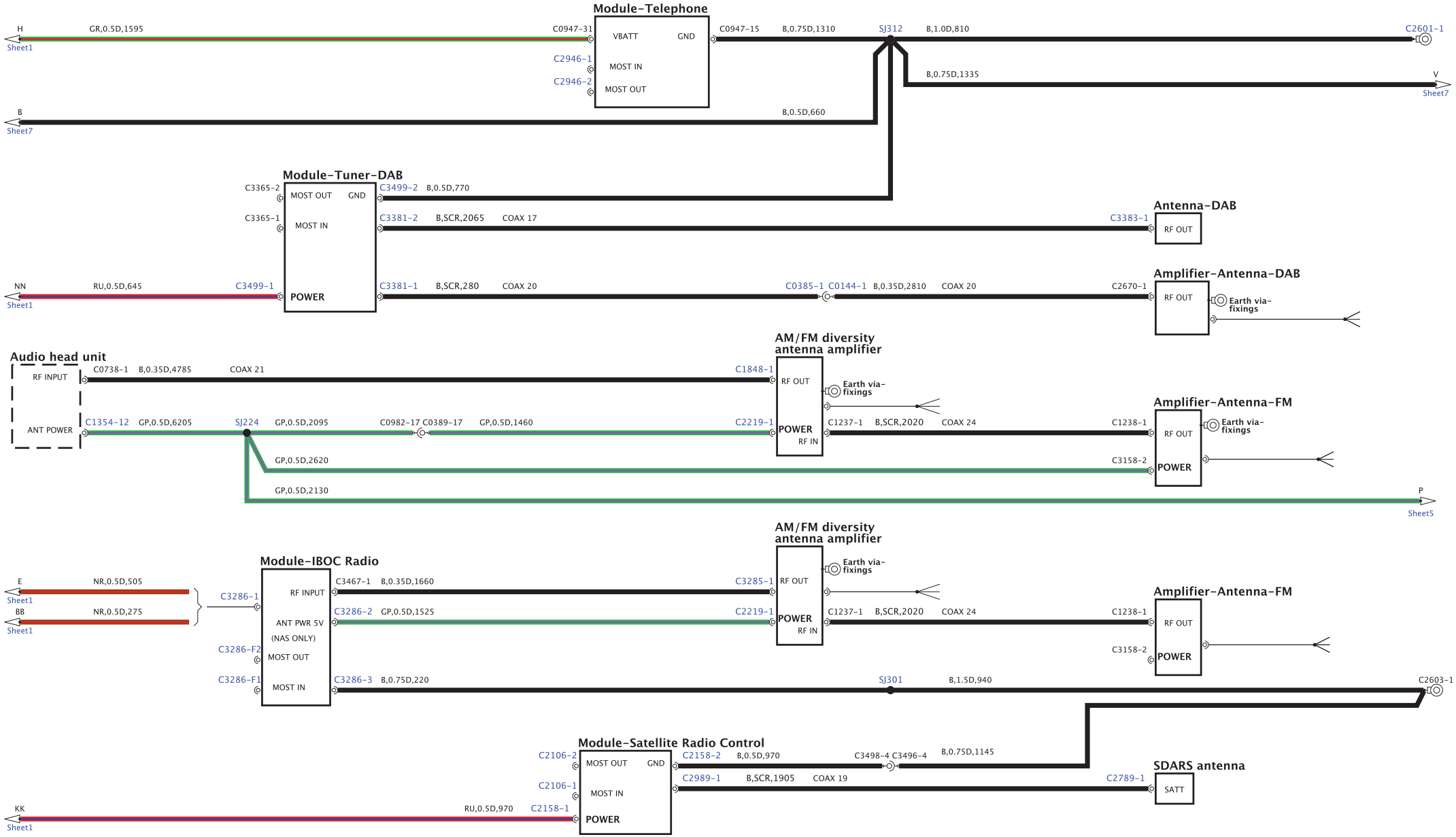

BH42-70441-B-A-07-10-Service (L322-11MY-JOB1)

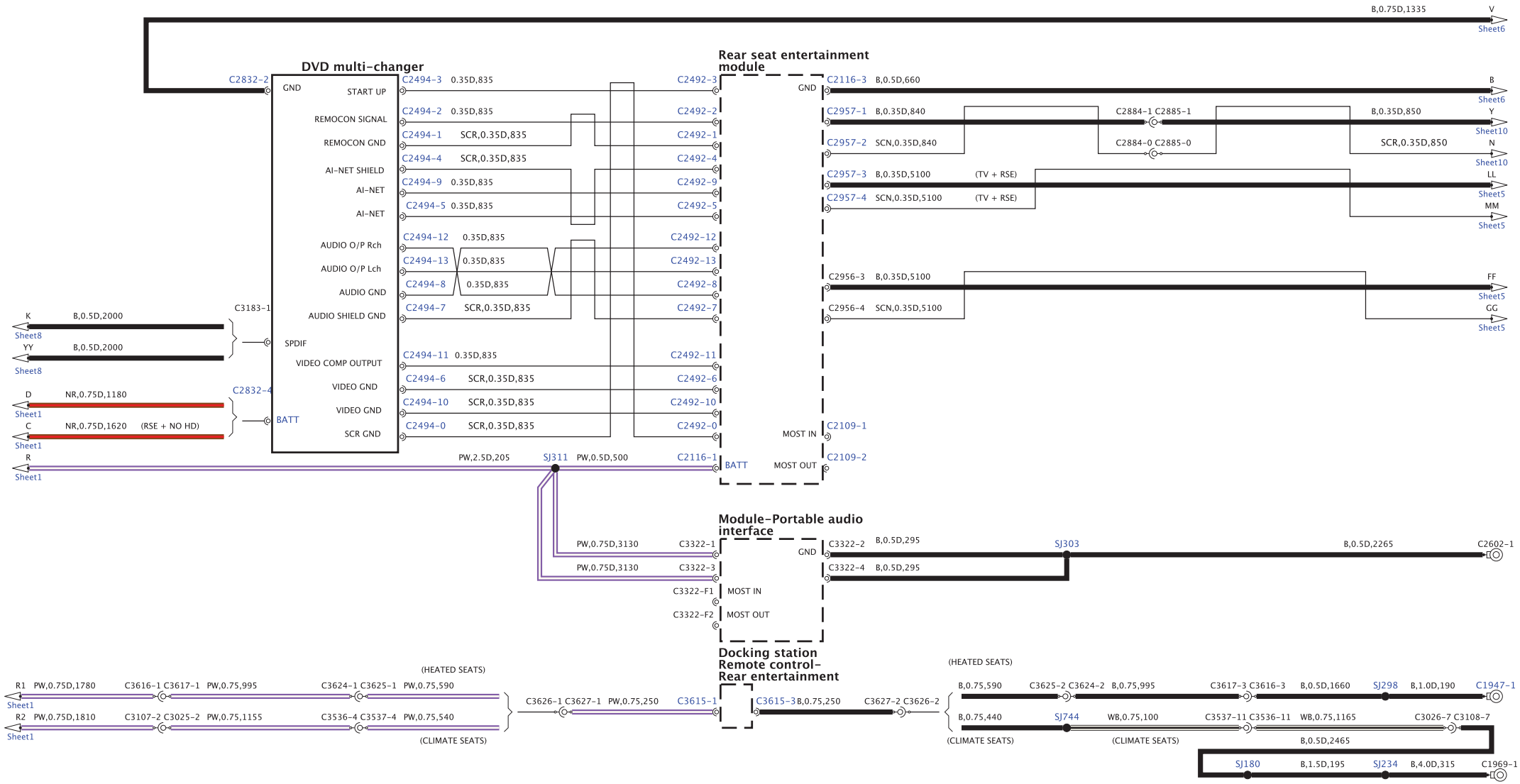

BH42-70441-B-A-08-10-Service (L322-11MY-J081)

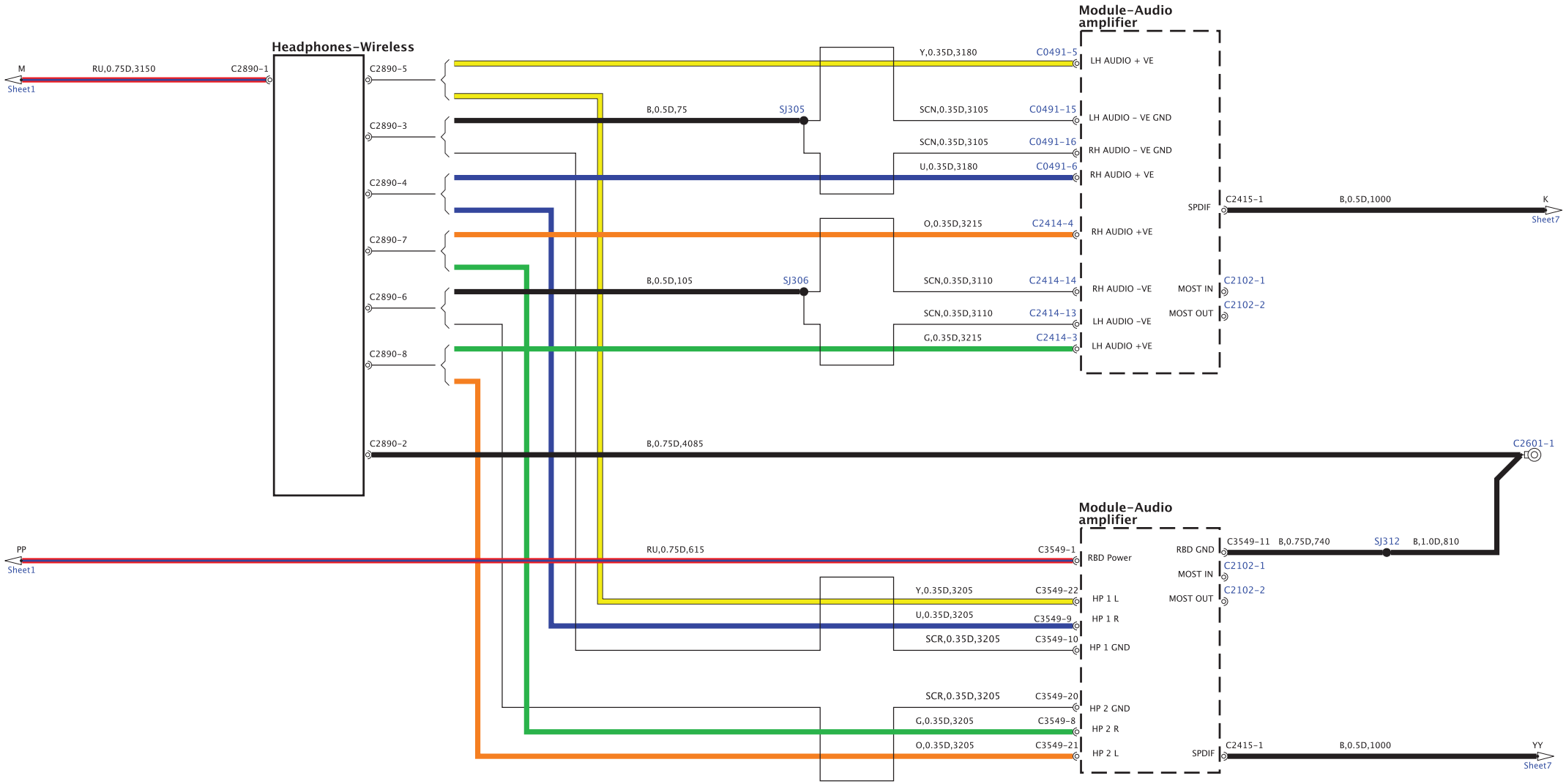

BH42-70441-B-A-09-10-Service (L322-11MY-J081)

Rear seat entertainment module

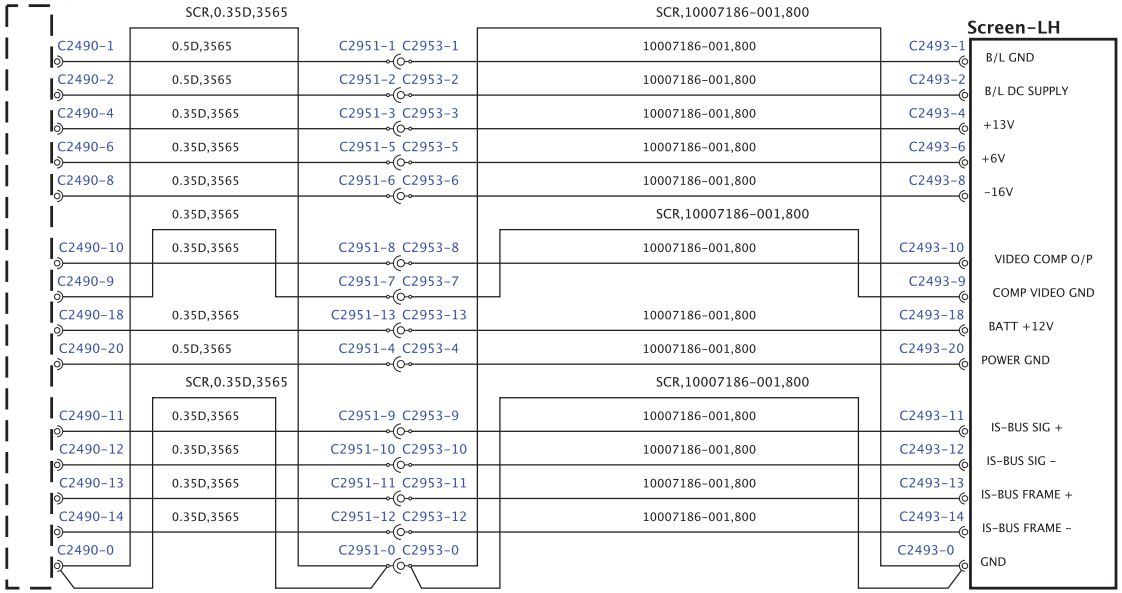

Module-Control-Emergency response

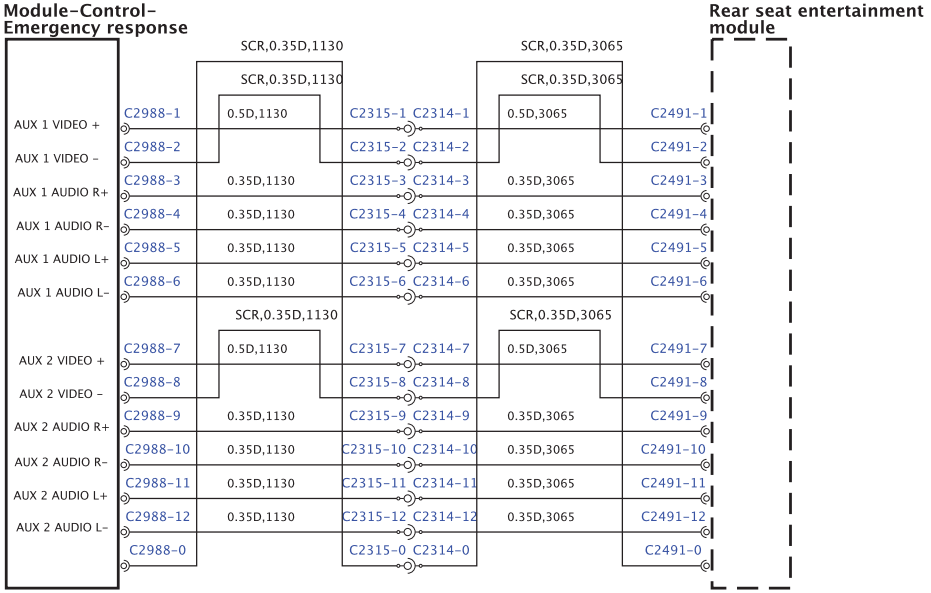

Rear seat entertainment module

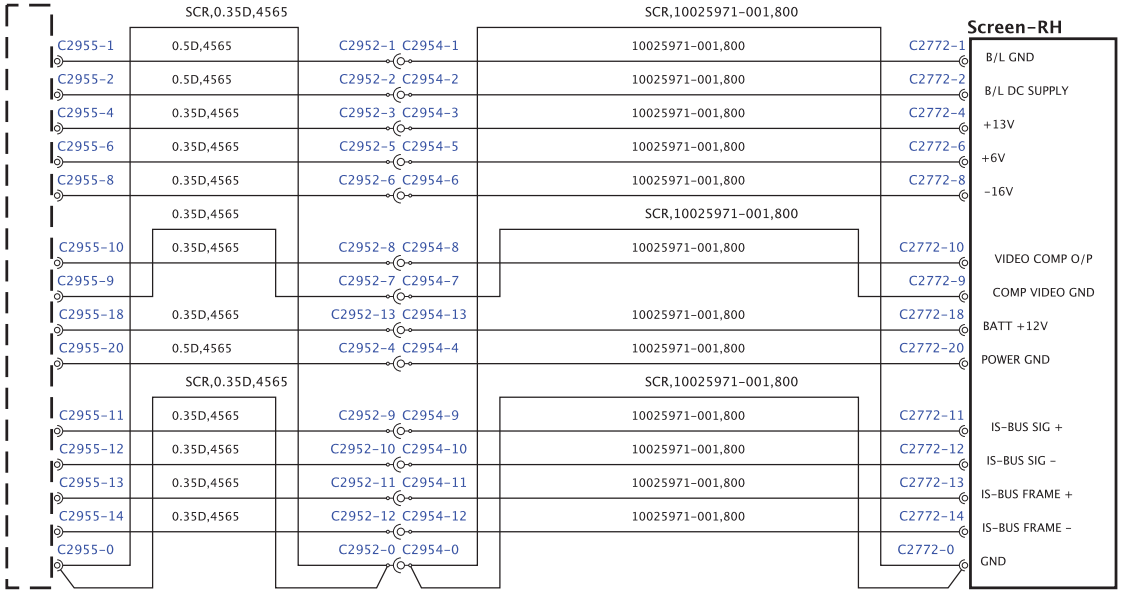

BH42-70441-B-A-10-10-Service (L322-11MY-JOB1)

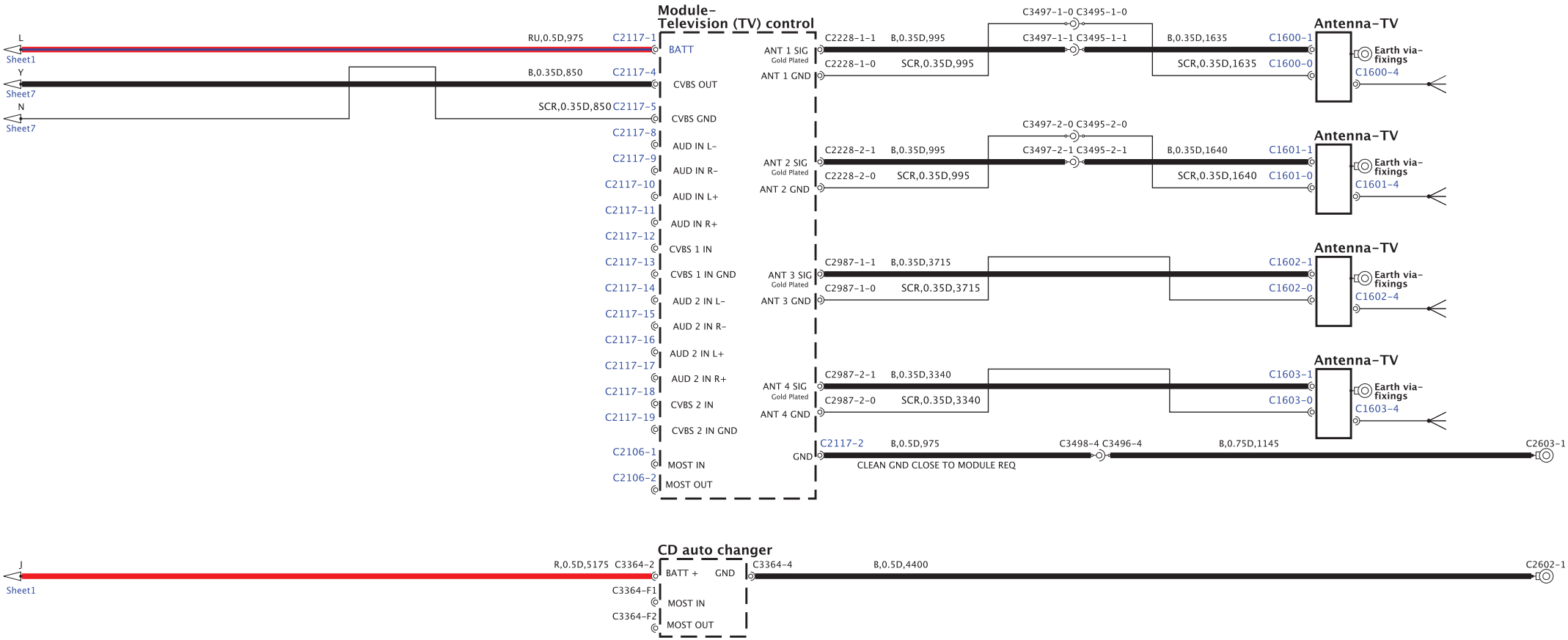

BH42-70441-A-A-01-09-Service (L322-11MY-JOB1)

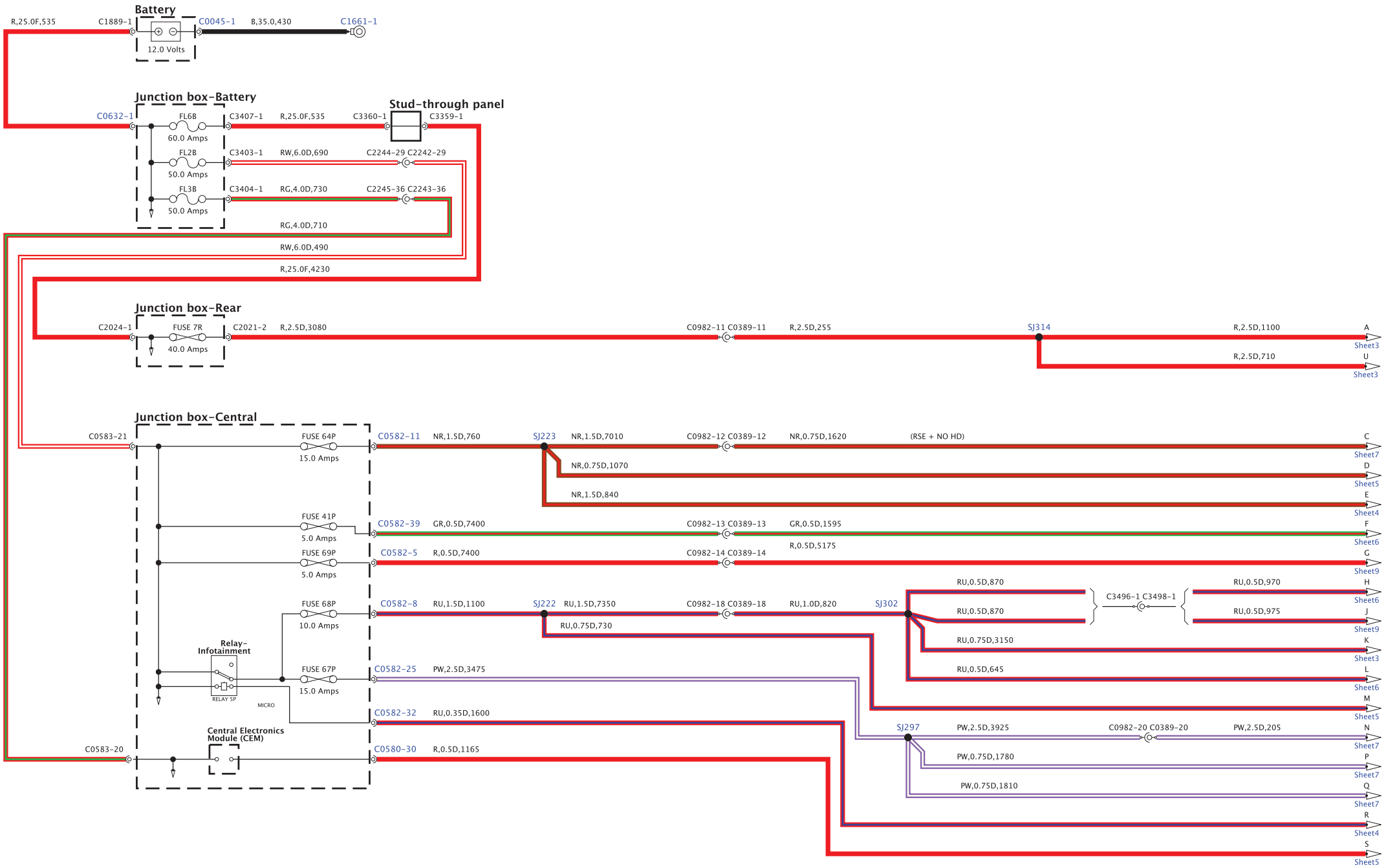

BH42-70441-A-A-02-09-Service (L322-11MY-JO83)

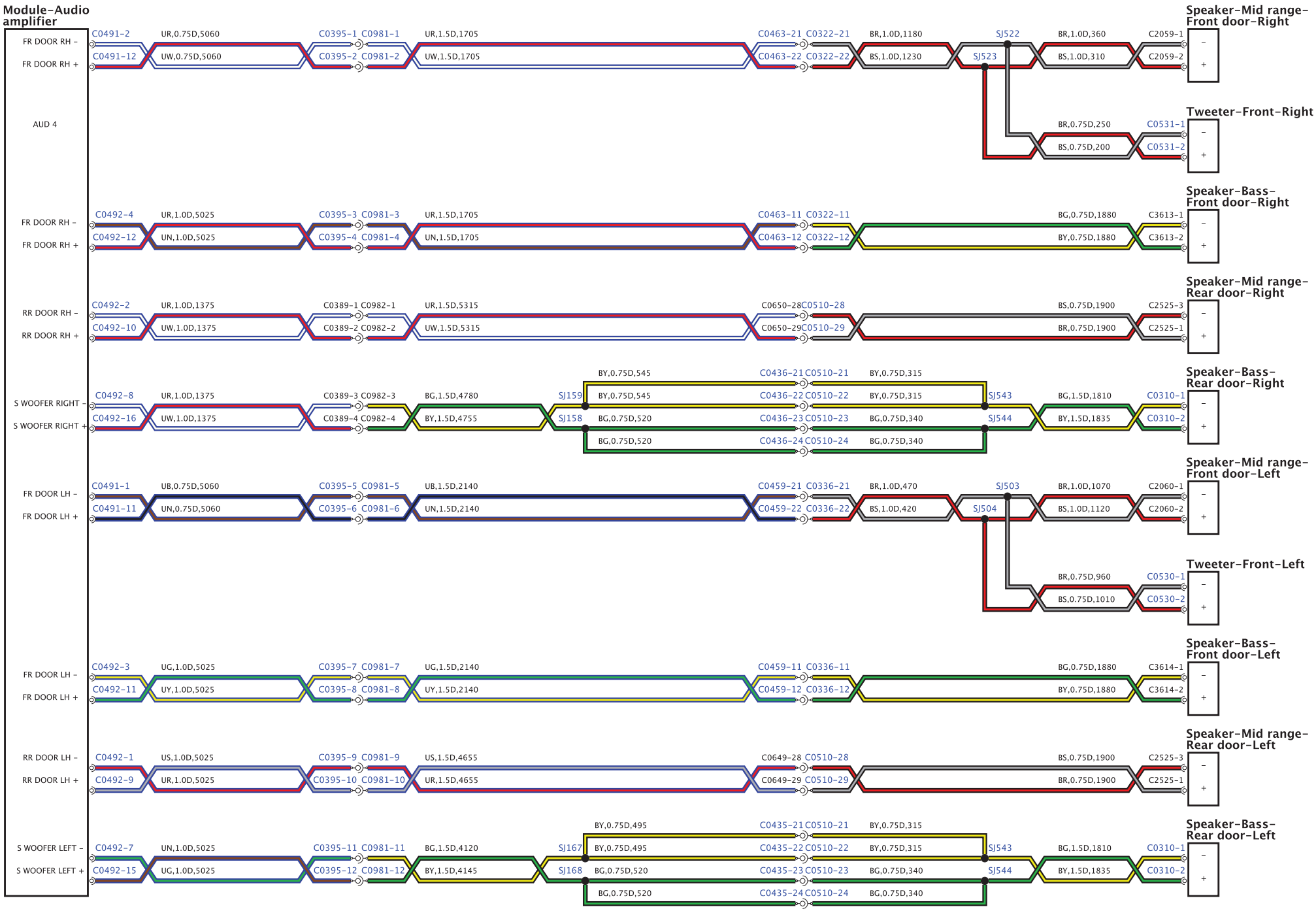

BH42-70441-A-A-03-09-Service (L322-11MY-JOB1)

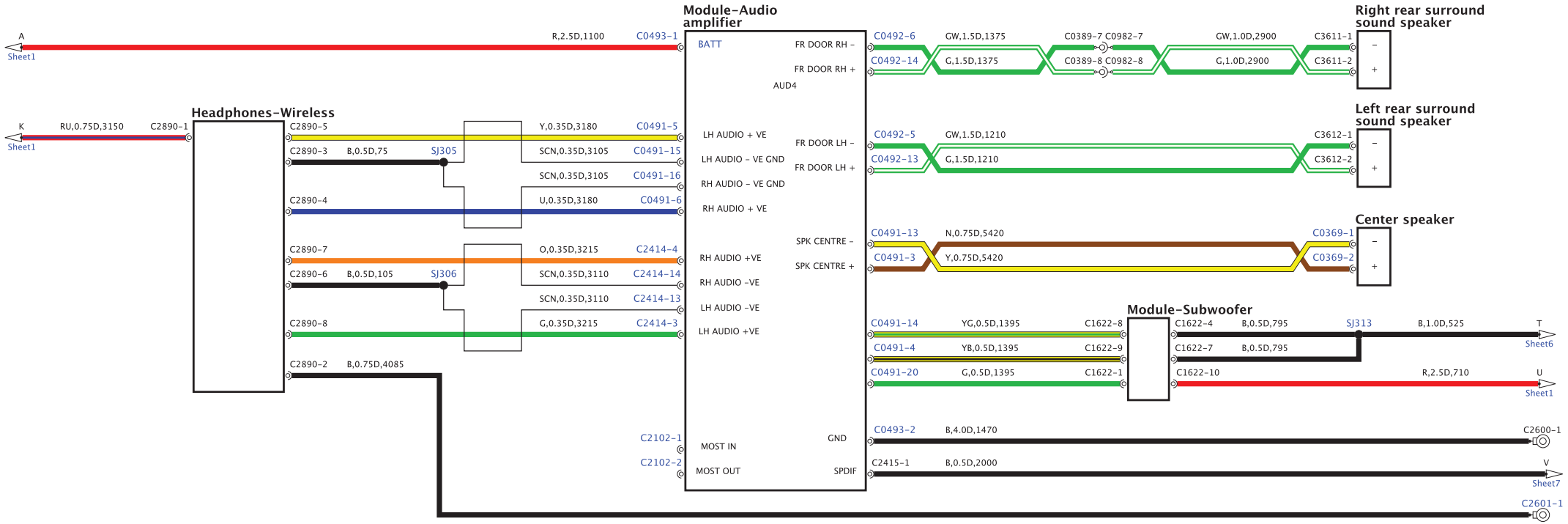

BH42-70441-A-A-04-09-Service (L322-11MY-JOB1)

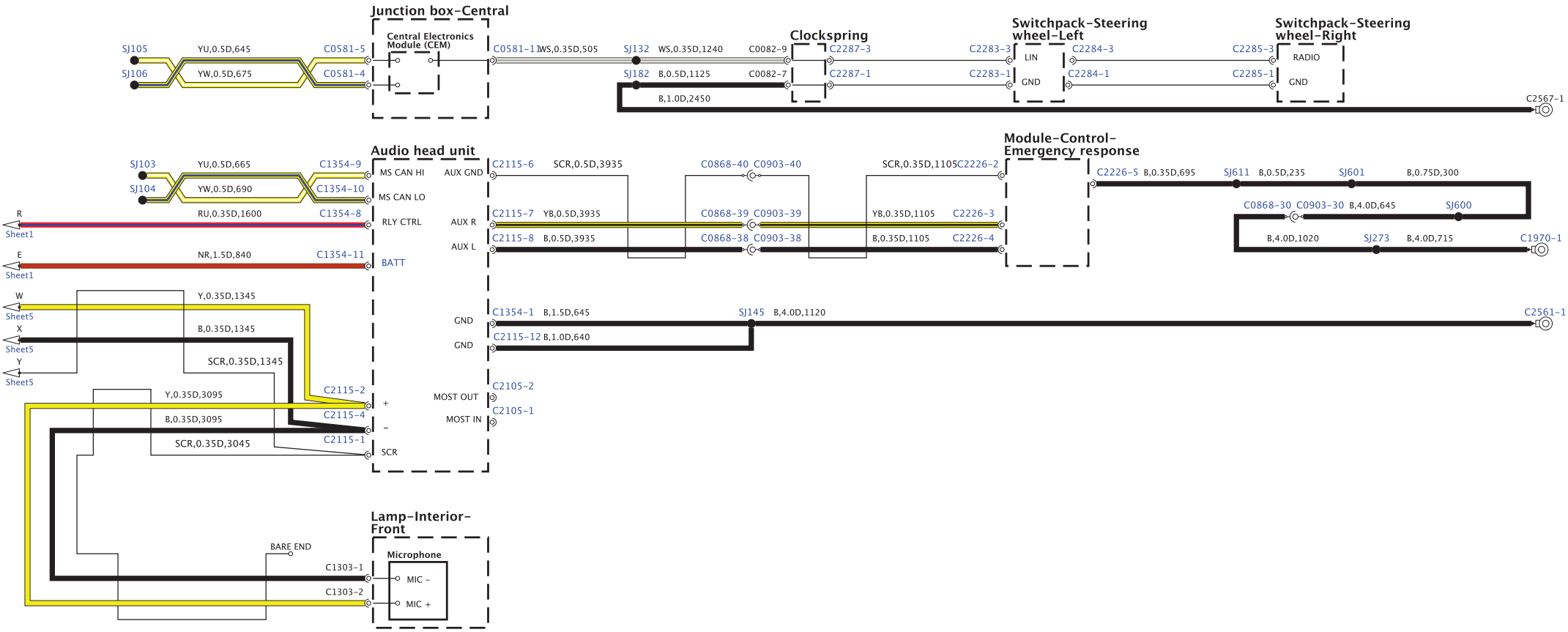

BH42-70441-A-A-05-09-Service (L322-11MY-JOB1)

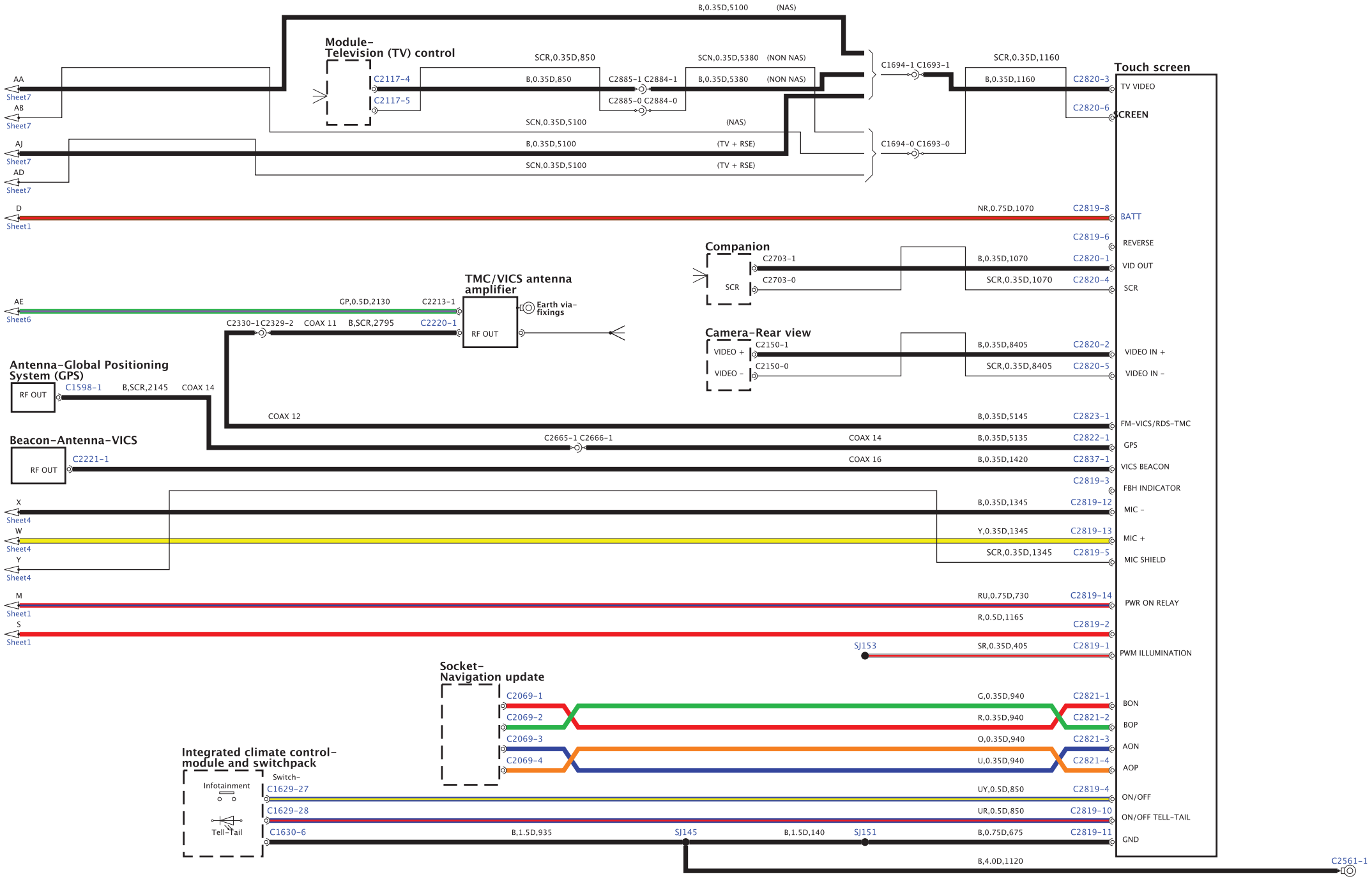

BH42-70441-A-A-06-09-Service (L322-11MY-JOB1)

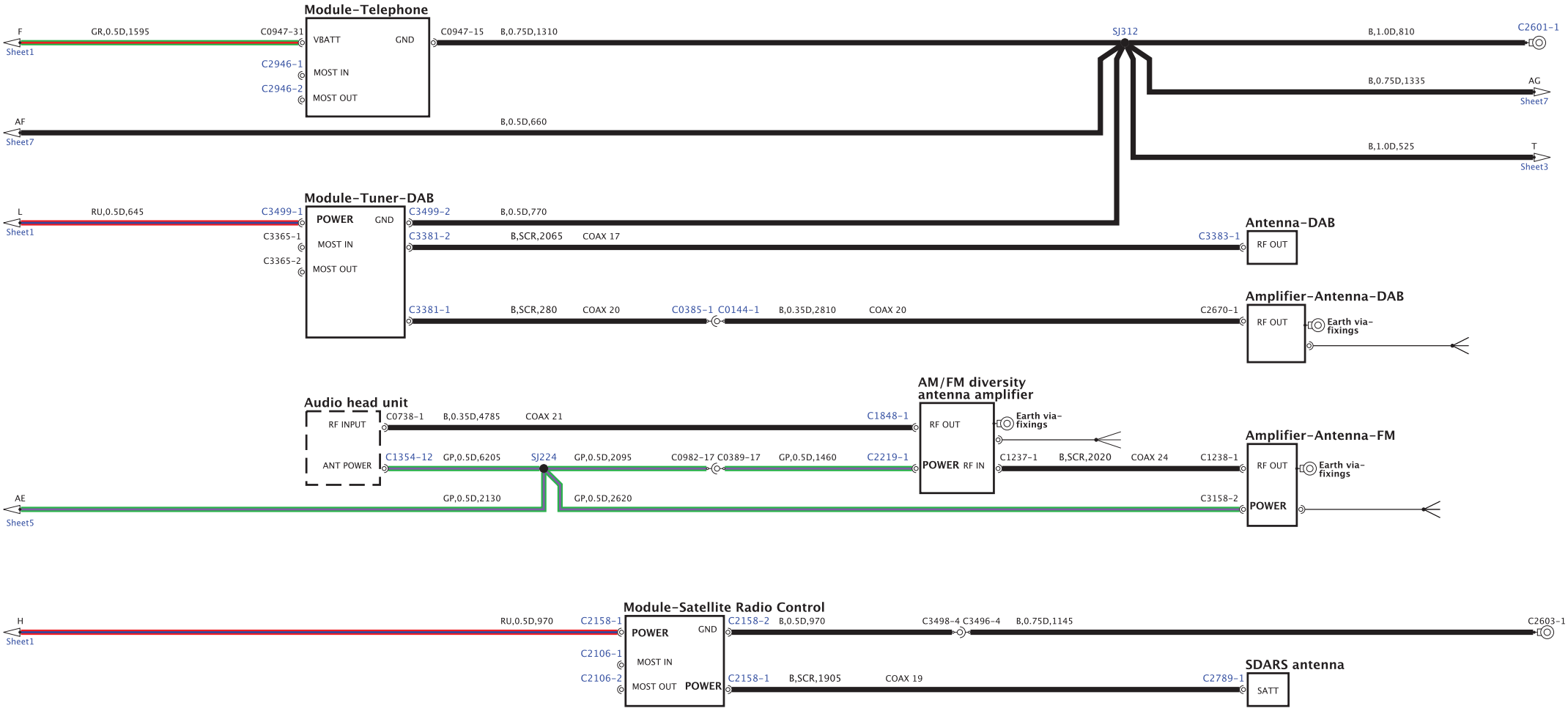

BH42-70441-A-A-07-09-Service (L322-11MY-JOB1)

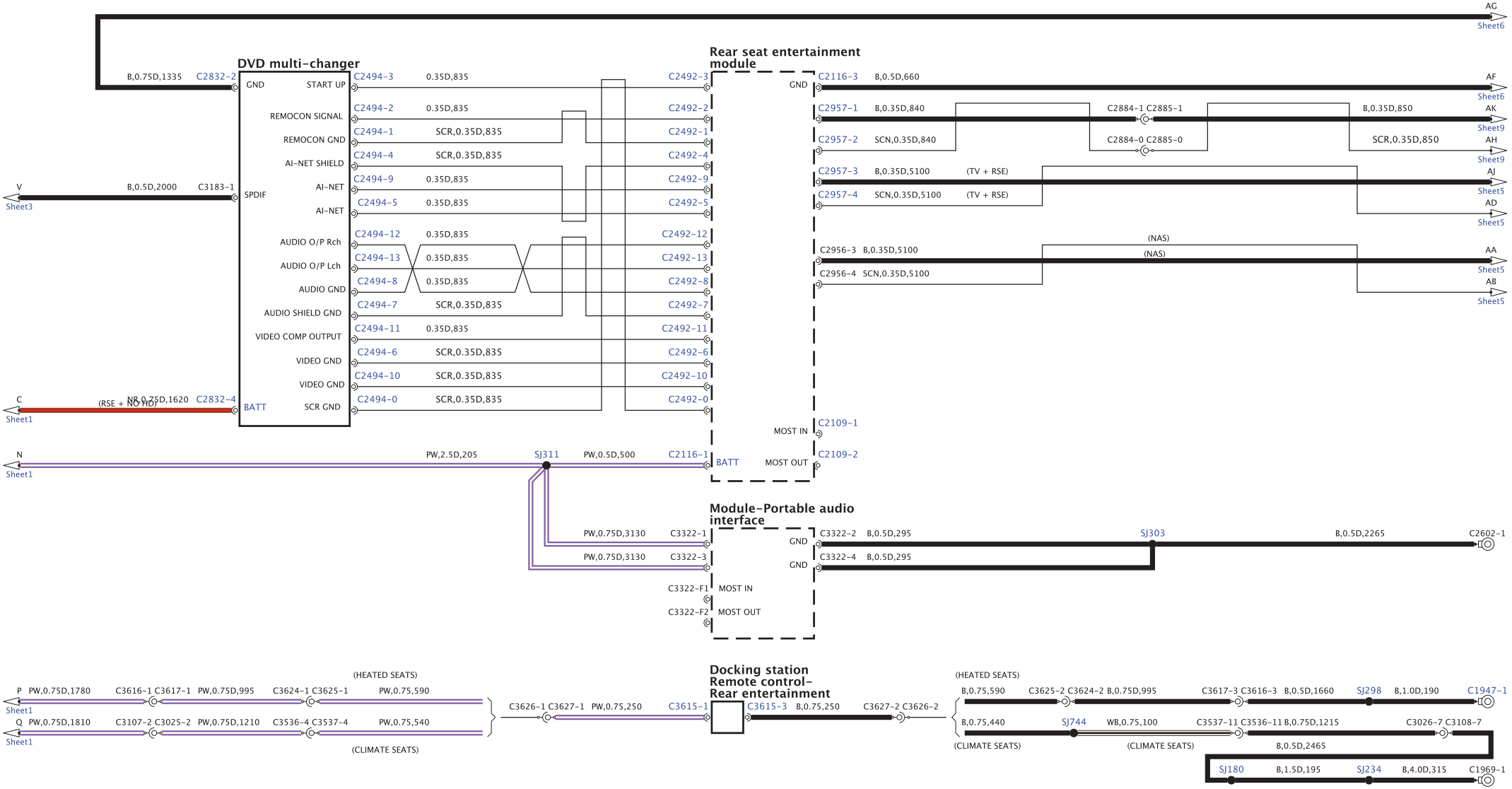

BH42-70441-A-A-08-09-Service (L322-13MY-JOB1)

Rear seat entertainment module

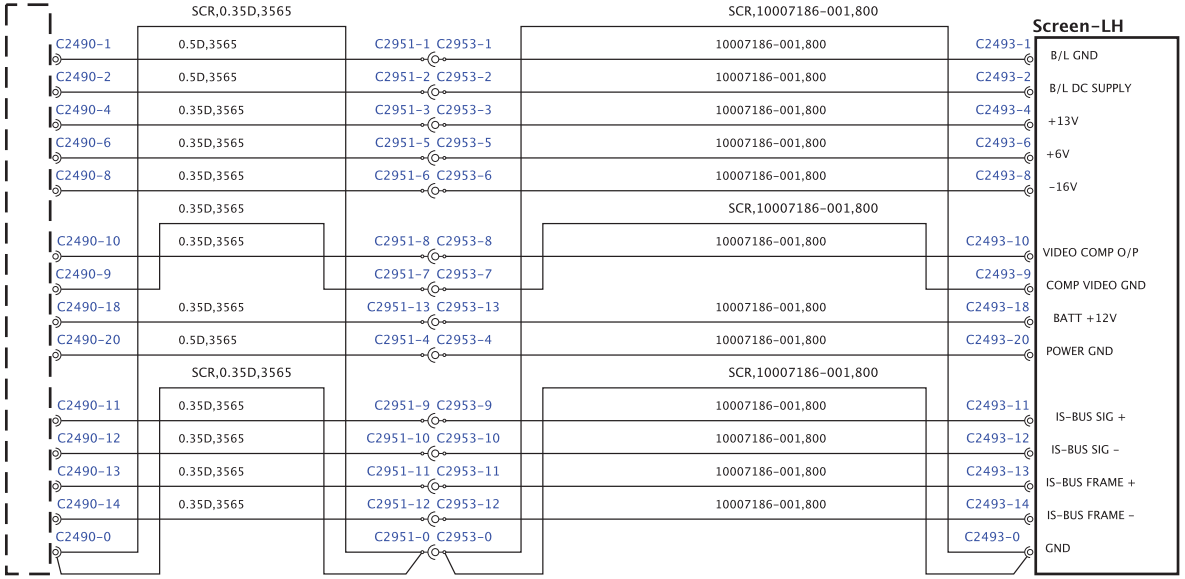

Module-Control-Emergency response

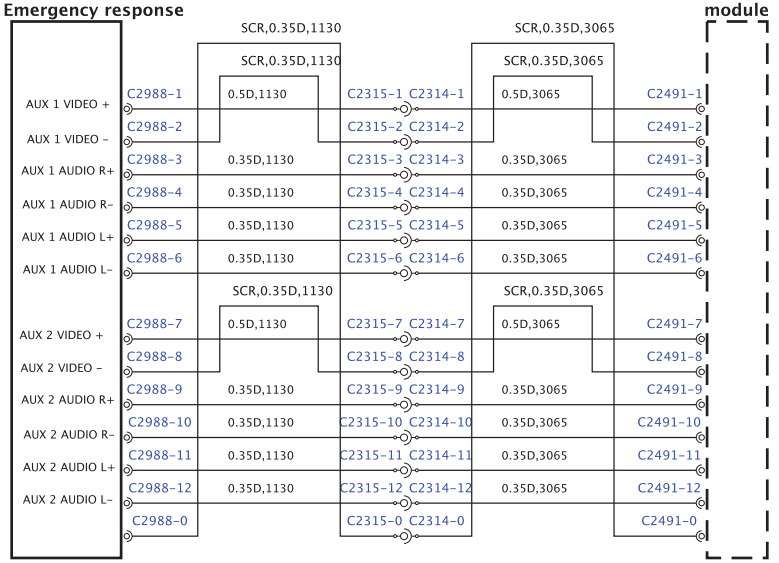

Rear seat entertainment module

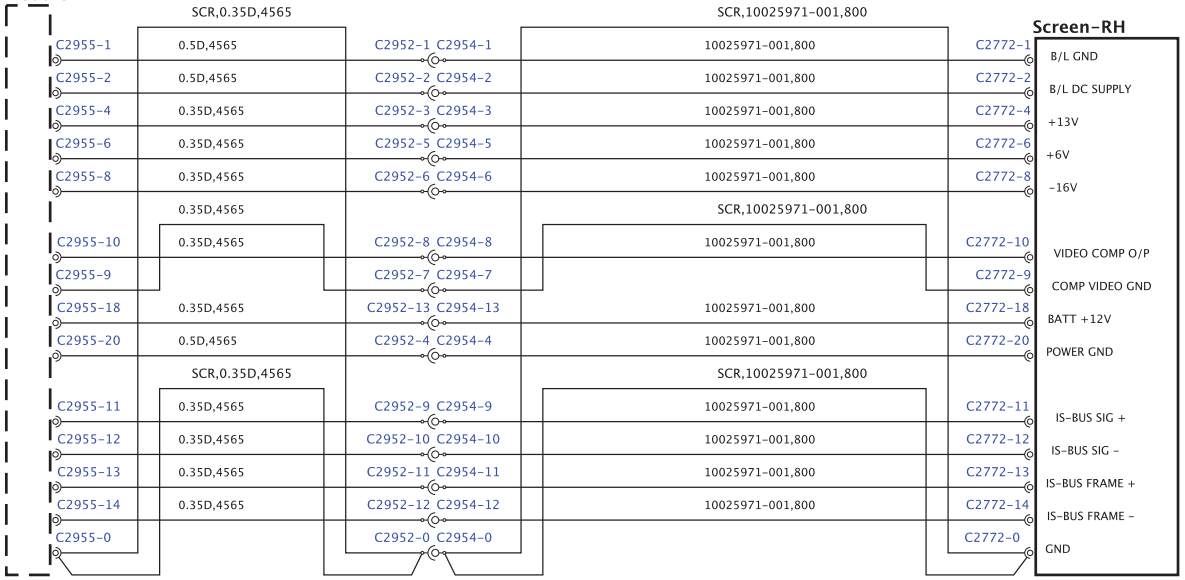

BH42-70441-A-A-09-09-Service (L322-11MY-JOB1)

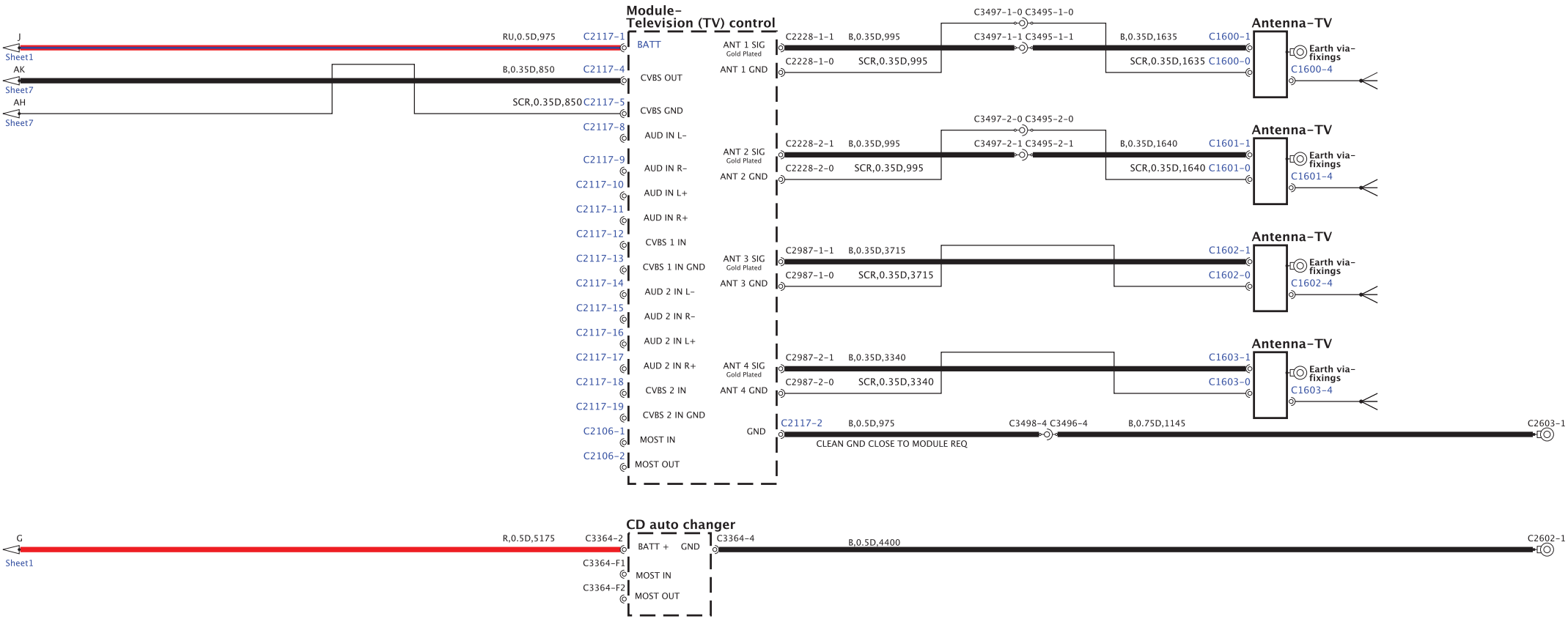

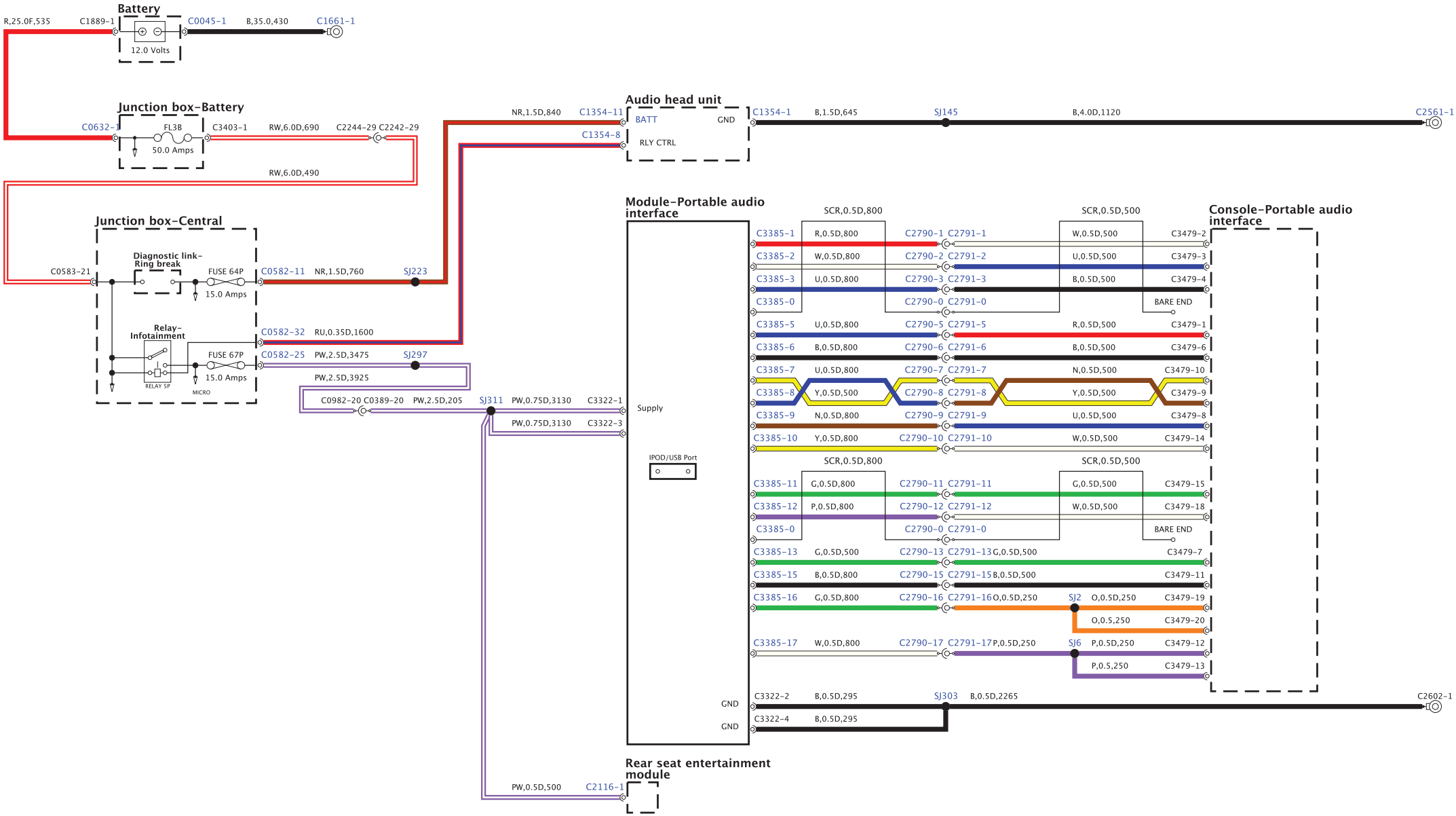
Battery
R,25.0F,535
C1889-1
C0045-1
B,35.0,430
C1661-1
12.0 Volts
Junction box-Battery
C0632-1
FL3B
50.0 Amps
C3403-1
RW,6.0D,690
C2244-29 C2242-29
RW,6.0D,490
Junction box-Central
Diagnostic link-Ring break
C0583-21
FUSE 64P
15.0 Amps
C0582-11
NR,1.5D,760
SJ223
Relay-Infotainment
RELAY 5P
MICRO
FUSE 67P
15.0 Amps
C0582-32
RU,0.35D,1600
C0582-25
PW,2.5D,3475
SJ297
PW,2.5D,3925
C0982-20 C0389-20
PW,2.5D,205
SJ311
PW,0.75D,3130
C3322-1
PW,0.75D,3130
C3322-3
PW,0.5D,500
C2116-1
Audio head unit
NR,1.5D,840
C1354-11
BATT
GND
C1354-8
RLY CTRL
C1354-1
B,1.5D,645
SJ145
B,4.0D,1120
C2561-1
Module-Portable audio interface
Supply
IPOD/USB Port
GND
GND
C3322-2
B,0.5D,295
SJ303
B,0.5D,2265
C2602-1
C3322-4
B,0.5D,295
Console-Portable audio interface
SCR,0.5D,800
SCR,0.5D,500
C3385-1
R,0.5D,800
C2790-1 C2791-1
W,0.5D,500
C3479-2
C3385-2
W,0.5D,800
C2790-2 C2791-2
U,0.5D,500
C3479-3
C3385-3
U,0.5D,800
C2790-3 C2791-3
B,0.5D,500
C3479-4
C3385-0
C2790-0 C2791-0
BARE END
C3385-5
U,0.5D,800
C2790-5 C2791-5
R,0.5D,500
C3479-1
C3385-6
B,0.5D,800
C2790-6 C2791-6
B,0.5D,500
C3479-6
C3385-7
U,0.5D,800
C2790-7 C2791-7
N,0.5D,500
C3479-10
C3385-8
Y,0.5D,500
C2790-8 C2791-8
Y,0.5D,500
C3479-9
C3385-9
N,0.5D,800
C2790-9 C2791-9
U,0.5D,500
C3479-8
C3385-10
Y,0.5D,800
C2790-10 C2791-10
W,0.5D,500
C3479-14
SCR,0.5D,800
SCR,0.5D,500
C3385-11
G,0.5D,800
C2790-11 C2791-11
G,0.5D,500
C3479-15
C3385-12
P,0.5D,800
C2790-12 C2791-12
W,0.5D,500
C3479-18
C3385-0
C2790-0 C2791-0
BARE END
C3385-13
G,0.5D,500
C2790-13 C2791-13
G,0.5D,500
C3479-7
C3385-15
B,0.5D,800
C2790-15 C2791-15
B,0.5D,500
C3479-11
C3385-16
G,0.5D,800
C2790-16 C2791-16
O,0.5D,250
SJ2
O,0.5D,250
C3479-19
O,0.5,250
C3479-20
C3385-17
W,0.5D,800
C2790-17 C2791-17
P,0.5D,250
SJ6
P,0.5D,250
C3479-12
P,0.5,250
C3479-13
Rear seat entertainment module

BH42-70483-H-A-01-01-Service (L322-11MY-JOB1)

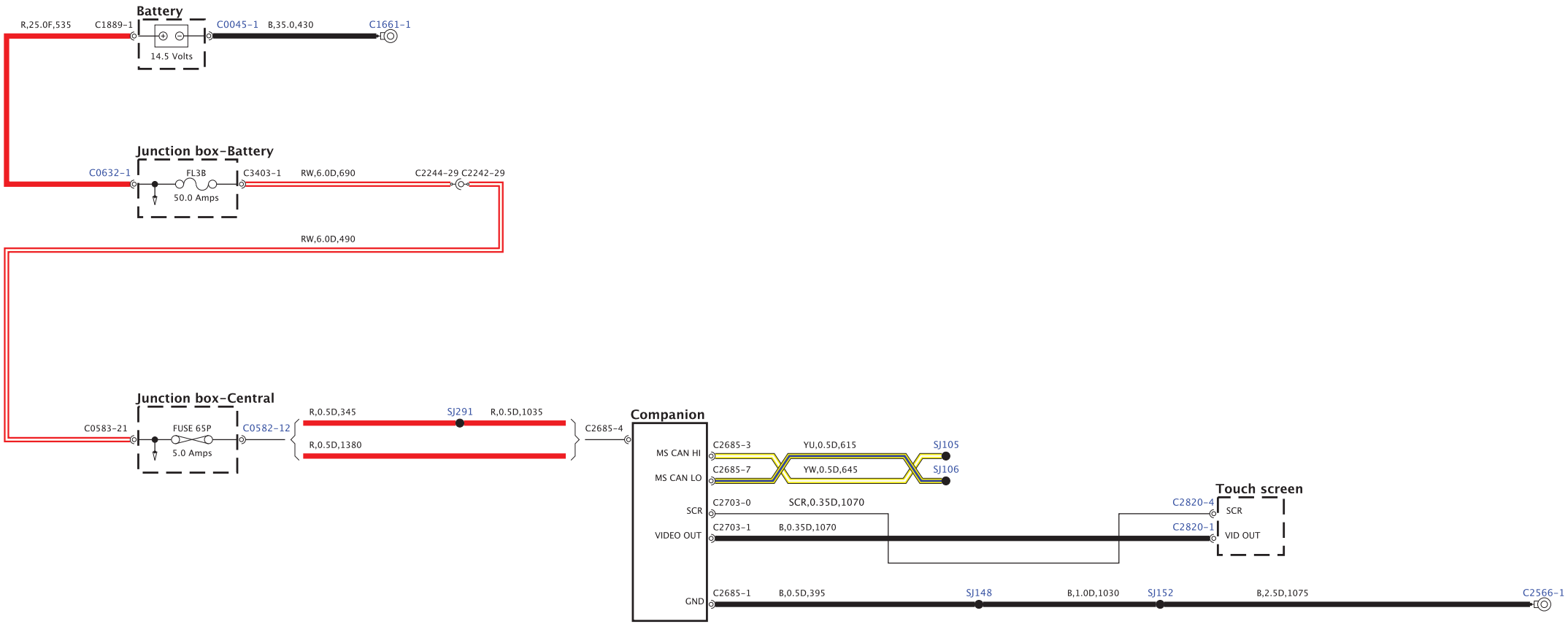

BH42-70060-E-A-01-05-Service (L322-11MY-JO81)

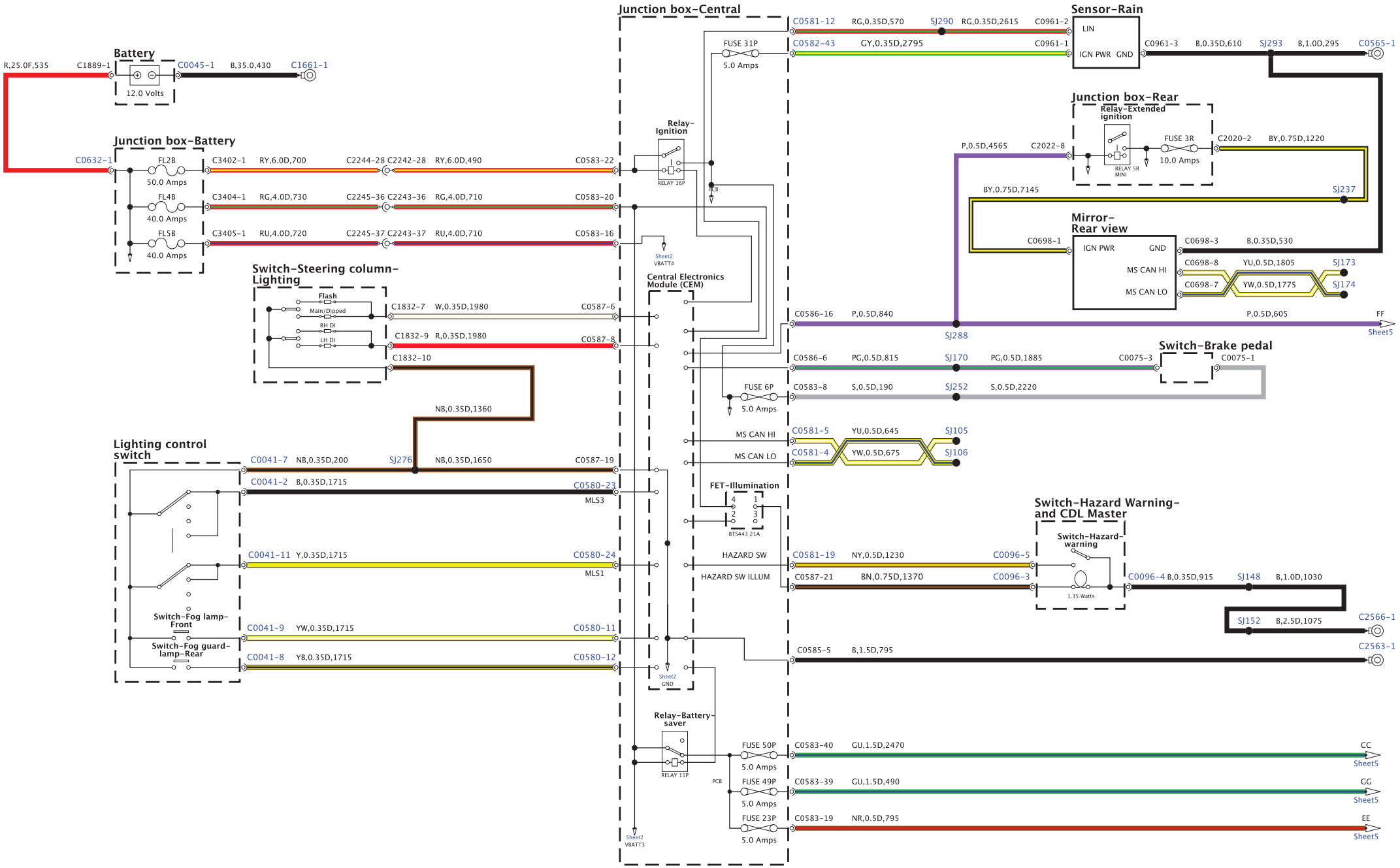

BH42-70060-E-A-02-05-Service (L322-11MY-JOB1)

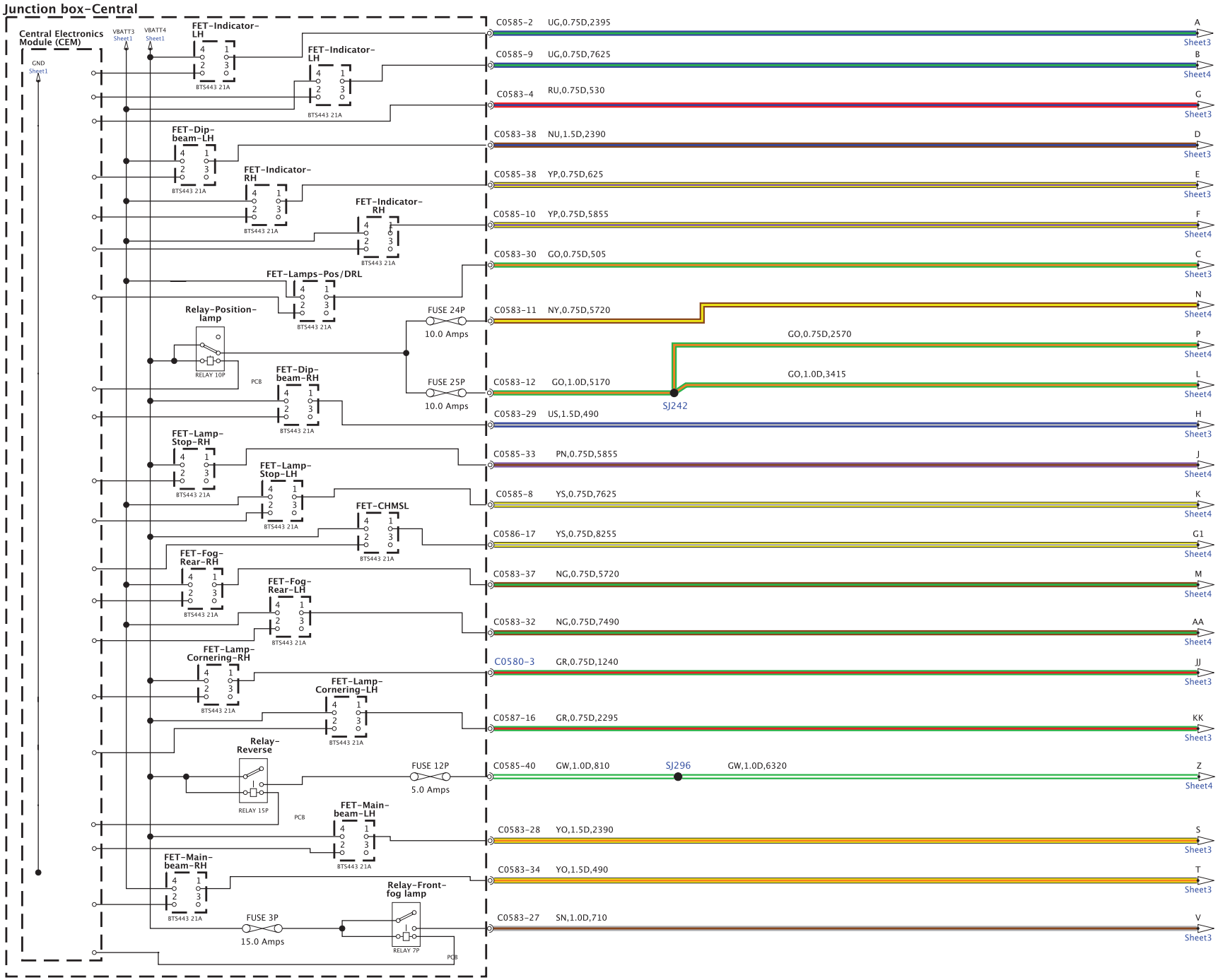

BH42-70060-E-A-03-05-Service (L322-11MY-JOB1)

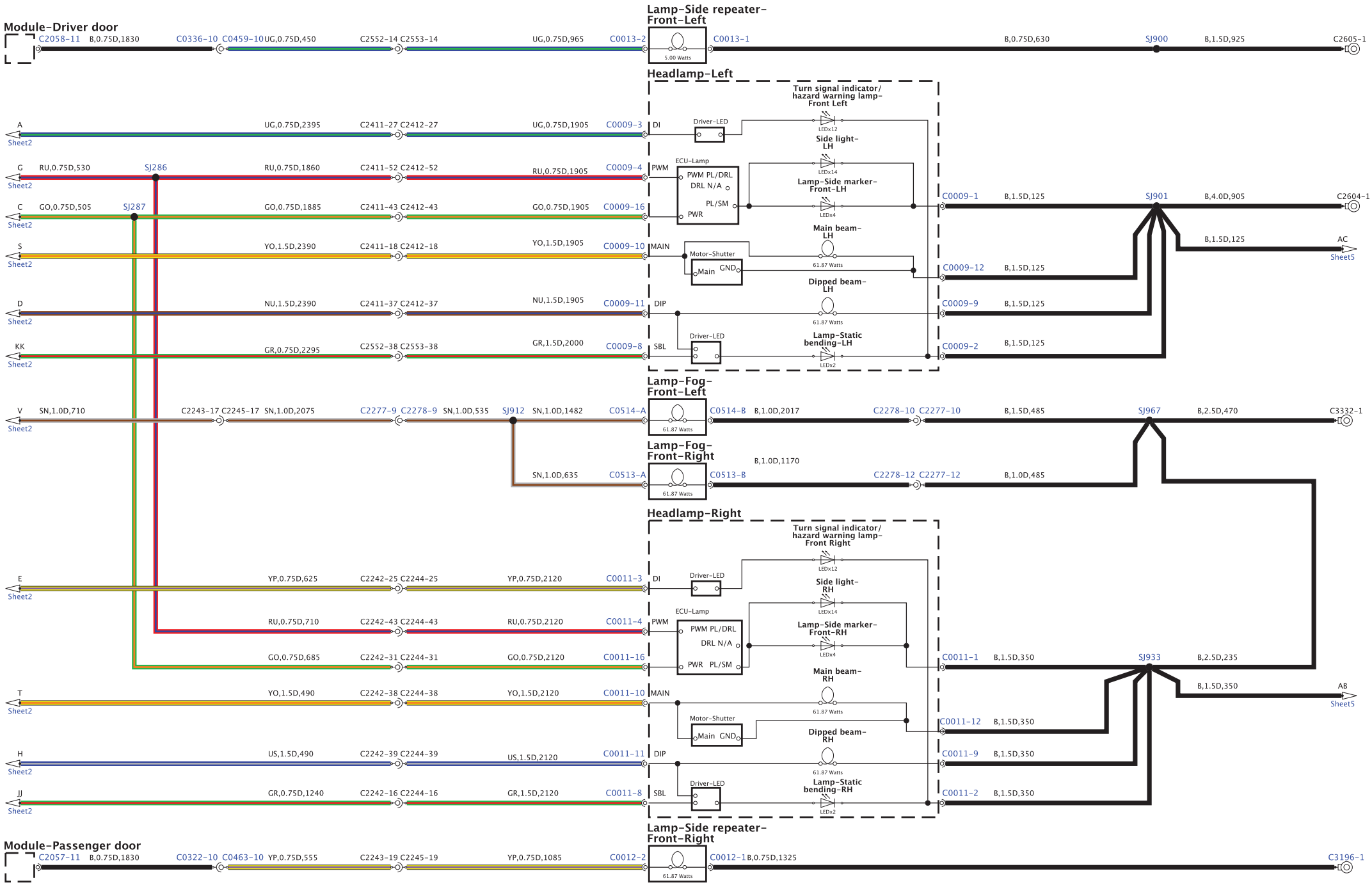

BH42-70060-E-A-04-05-Service (L322-11MY-JOB1)

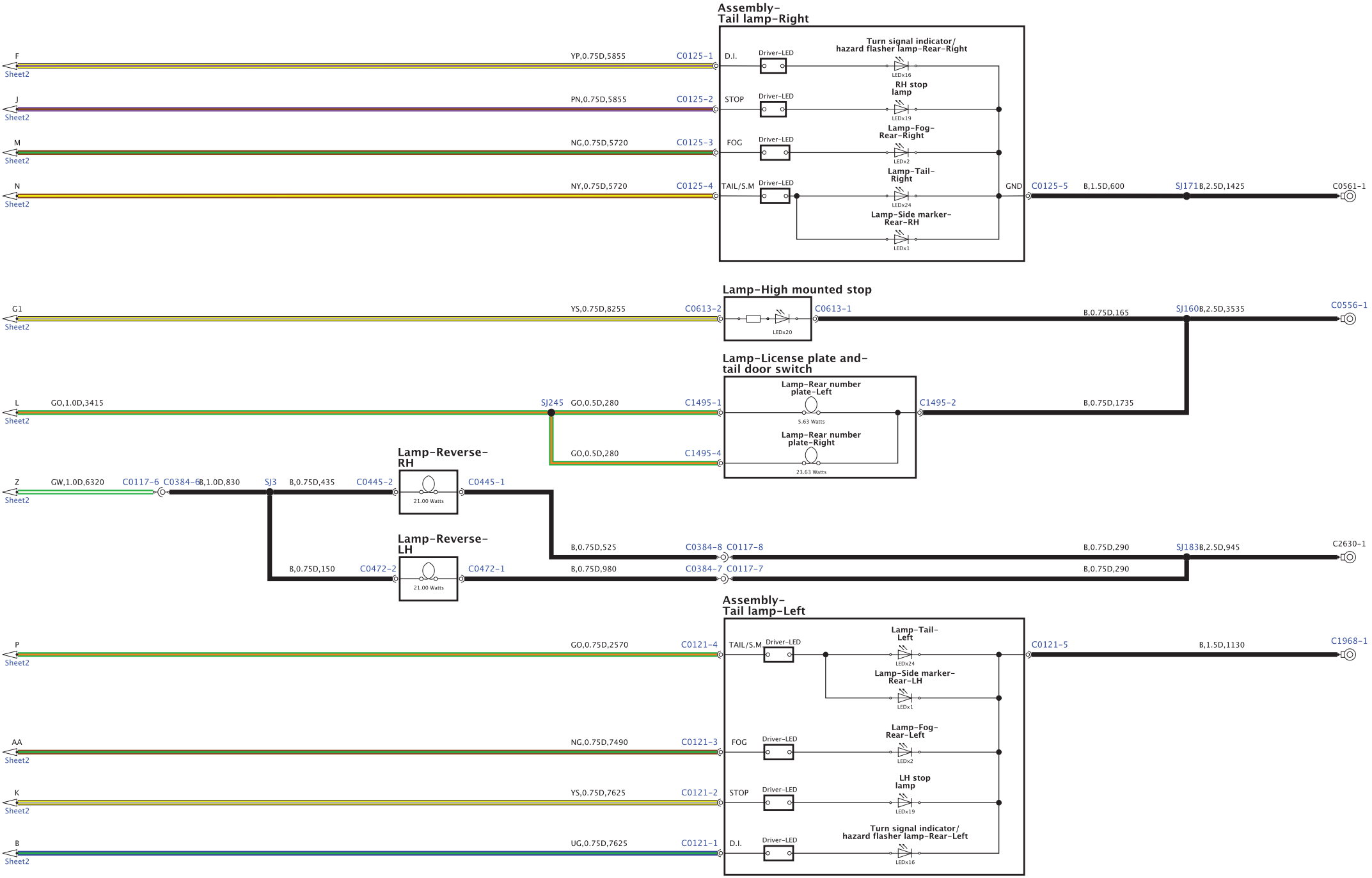

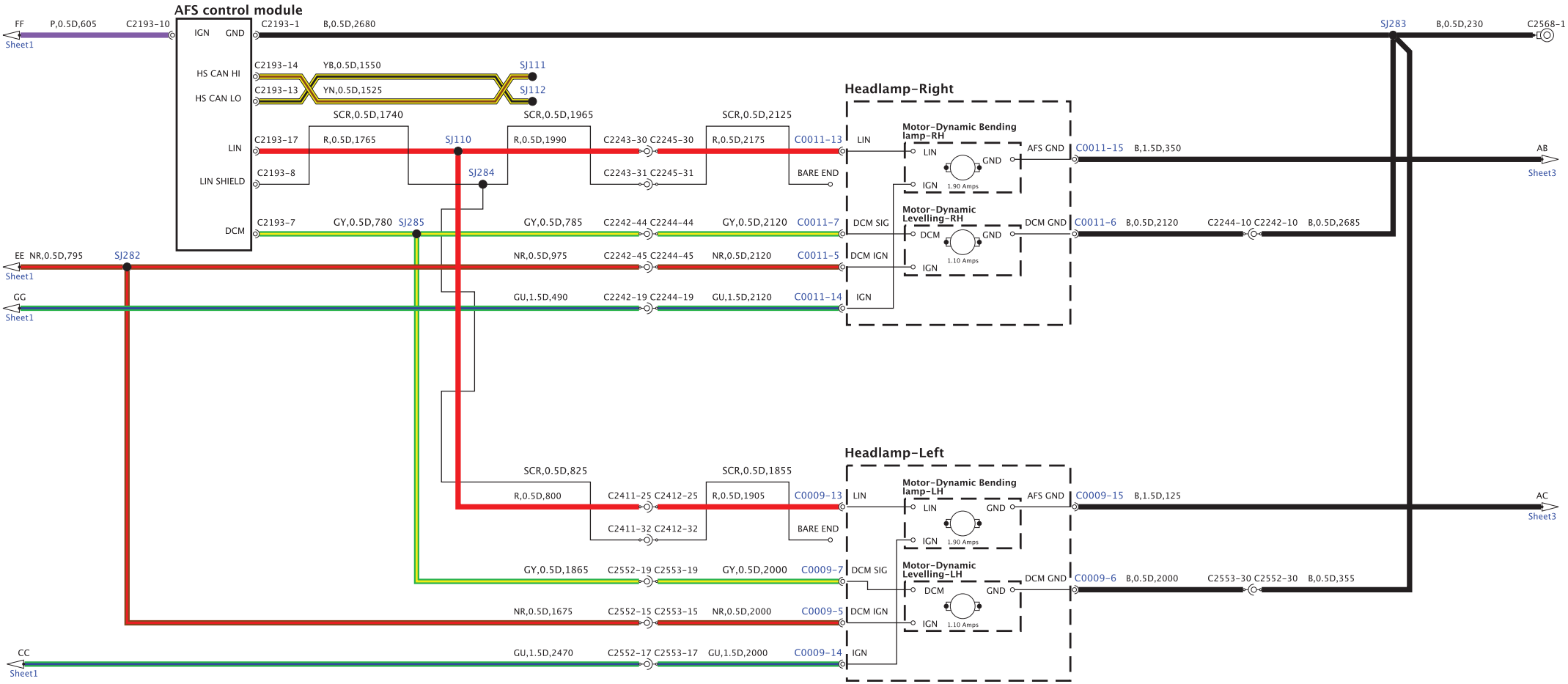
AFS control module
IGN
GND
HS CAN HI
HS CAN LO
LIN
LIN SHIELD
DCM
FF P,0.5D,605 C2193-10
Sheet1
C2193-1 B,0.5D,2680
SJ283 B,0.5D,230 C2568-1
C2193-14 YB,0.5D,1550 SJ111
C2193-13 YN,0.5D,1525 SJ112
C2193-17 R,0.5D,1765 SJ110
C2193-8 SJ284
C2193-7 GY,0.5D,780 SJ285
EE NR,0.5D,795 SJ282
GG
CC
SCR,0.5D,1740
SCR,0.5D,1965
SCR,0.5D,2125
R,0.5D,1990 C2243-30 C2245-30 R,0.5D,2175 C0011-13
C2243-31 C2245-31 BARE END
GY,0.5D,785 C2242-44 C2244-44 GY,0.5D,2120 C0011-7
NR,0.5D,975 C2242-45 C2244-45 NR,0.5D,2120 C0011-5
GU,1.5D,490 C2242-19 C2244-19 GU,1.5D,2120 C0011-14
Headlamp-Right
LIN
DCM SIG
DCM IGN
IGN
Motor-Dynamic Bending lamp-RH
Motor-Dynamic Levelling-RH
LIN
GND
IGN
1.90 Amps
DCM
GND
1.10 Amps
AFS GND C0011-15 B,1.5D,350
AB
Sheet3
DCM GND C0011-6 B,0.5D,2120 C2244-10 C2242-10 B,0.5D,2685
SCR,0.5D,825
SCR,0.5D,1855
R,0.5D,800 C2411-25 C2412-25 R,0.5D,1905 C0009-13
C2411-32 C2412-32 BARE END
GY,0.5D,1865 C2552-19 C2553-19 GY,0.5D,2000 C0009-7
NR,0.5D,1675 C2552-15 C2553-15 NR,0.5D,2000 C0009-5
GU,1.5D,2470 C2552-17 C2553-17 GU,1.5D,2000 C0009-14
Headlamp-Left
Motor-Dynamic Bending lamp-LH
Motor-Dynamic Levelling-LH
AFS GND C0009-15 B,1.5D,125
AC
Sheet3
DCM GND C0009-6 B,0.5D,2000 C2553-30 C2552-30 B,0.5D,355

BH42-70060-B-A-01-04-Service (L322-11MY-JOB1)

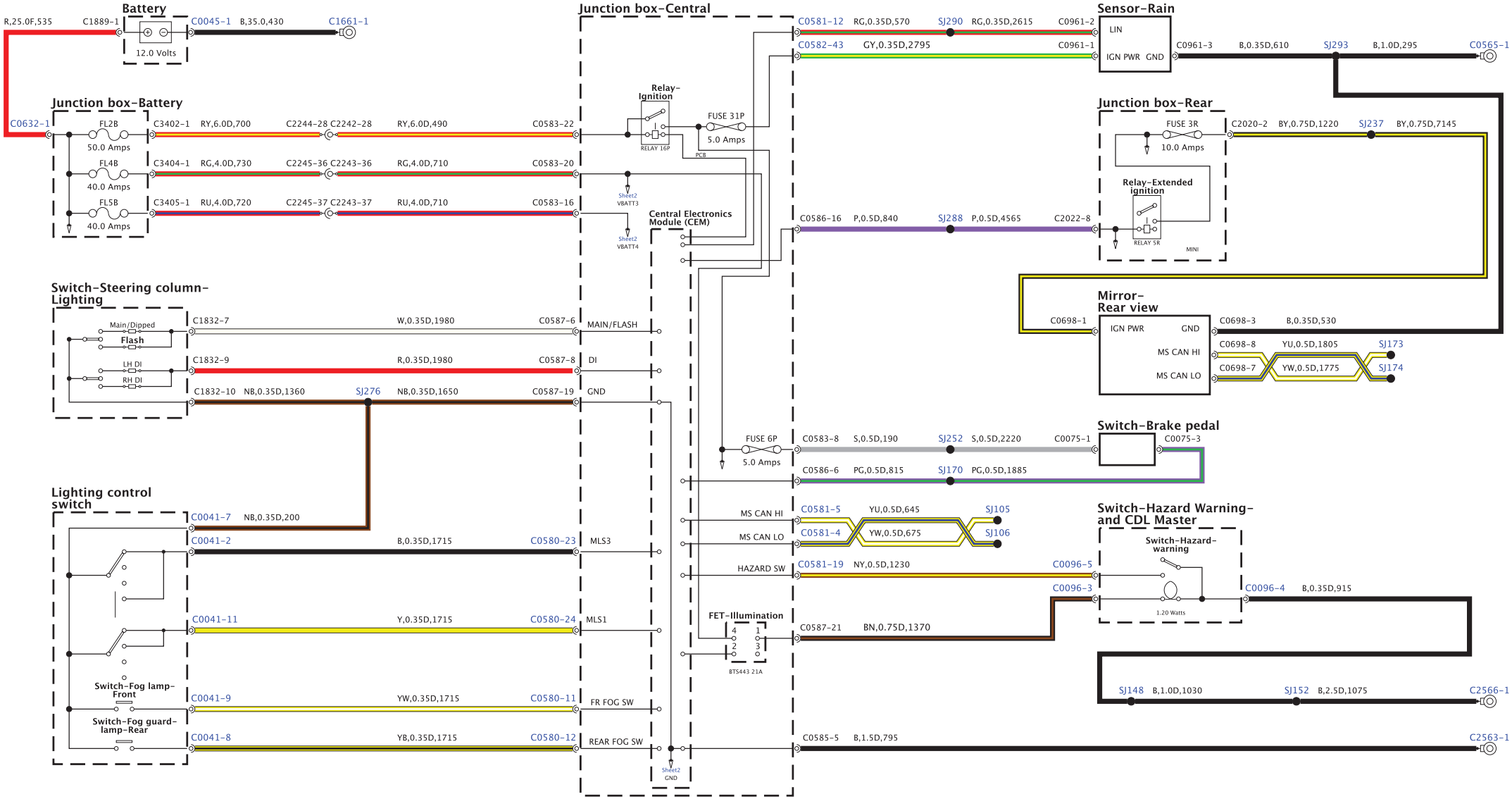

BH42-70060-B-A-02-04-Service (L322-11MY-JOB1)

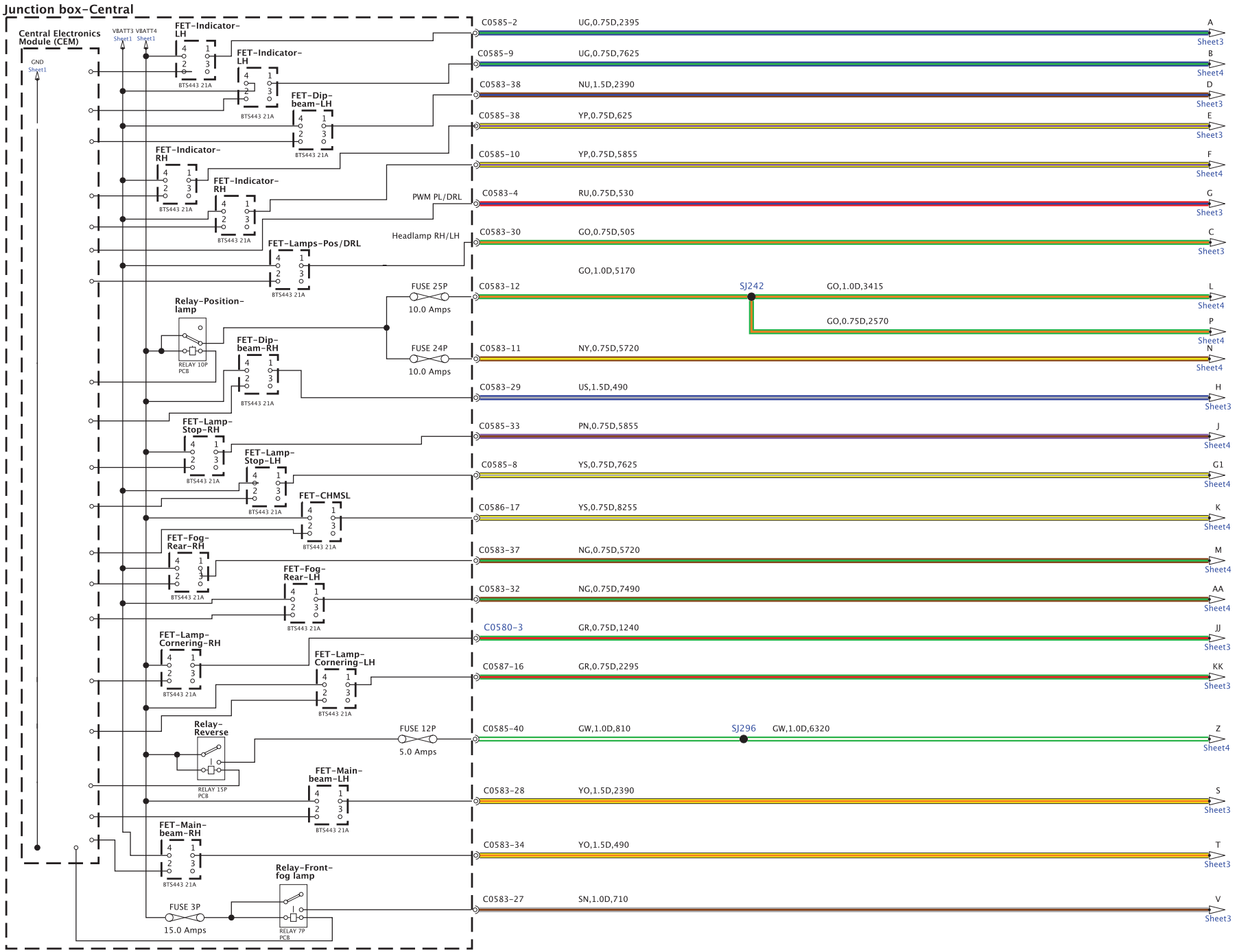

BH42-70060-B-A-03-04-Service (L322-11MY-JOB1)

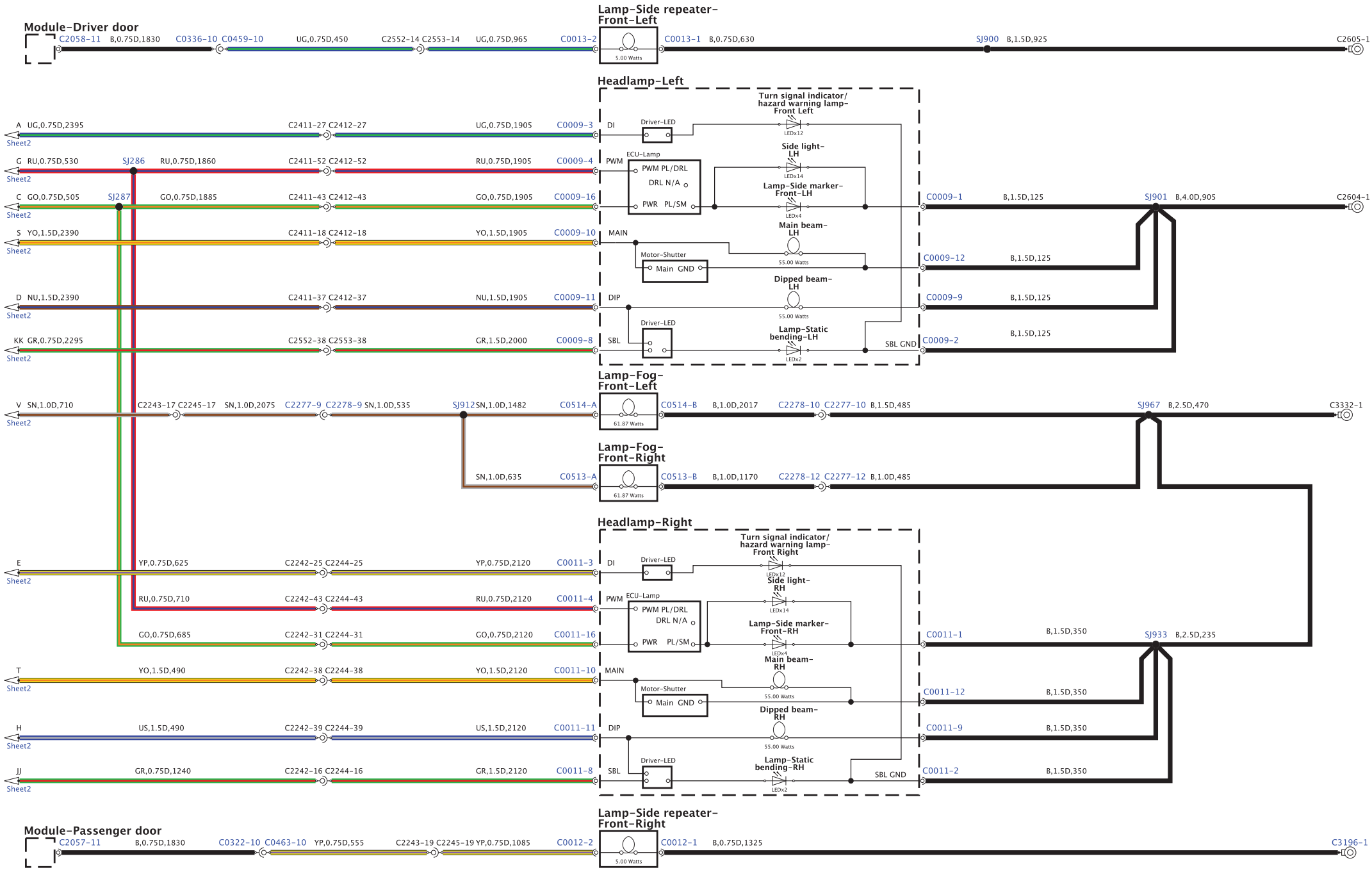

BH42-70060-B-A-04-04-Service (L322-11MY-JOB1)

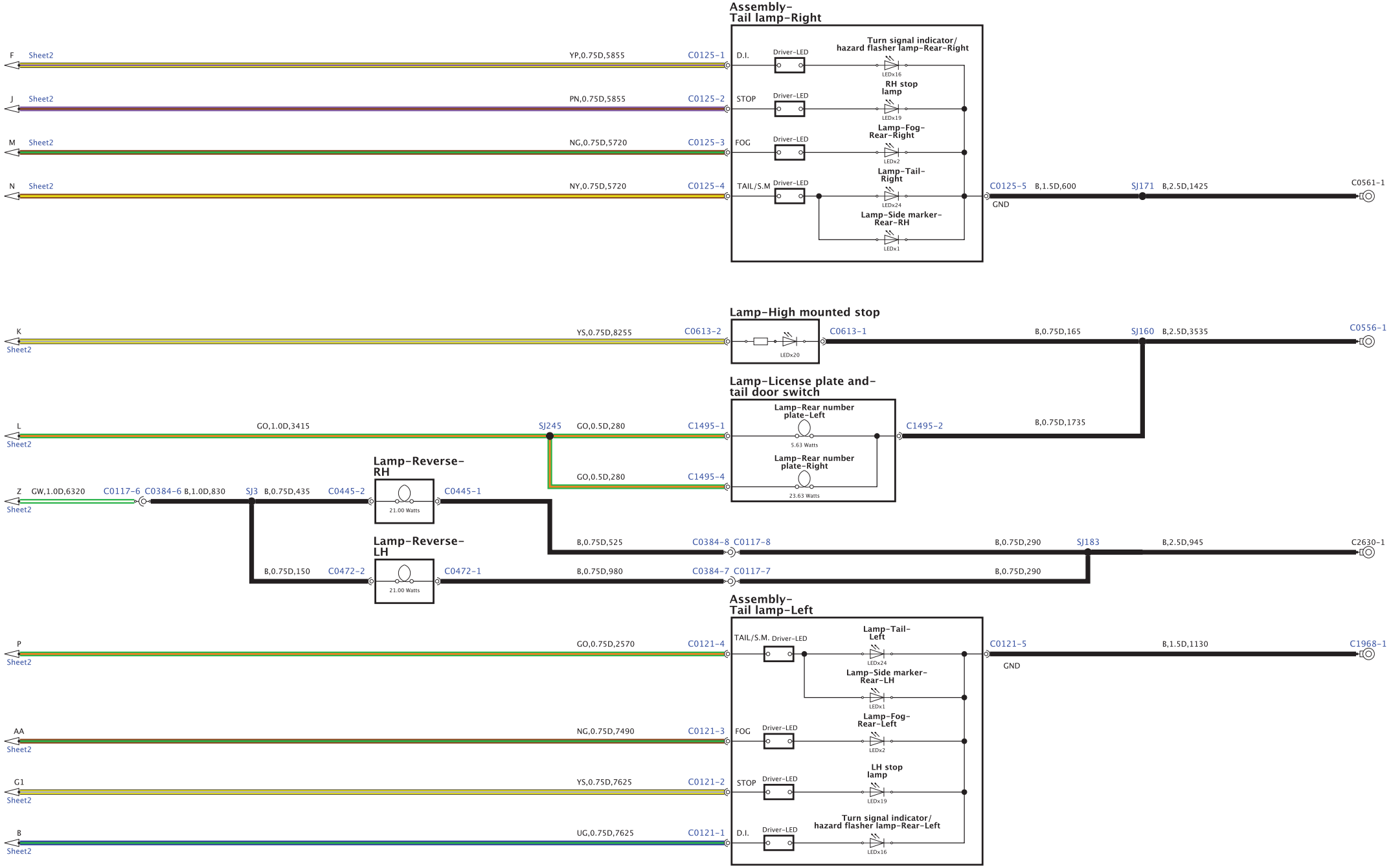

BH42-70469-B-A-01-01-Service (L322-13MY-JOB1)

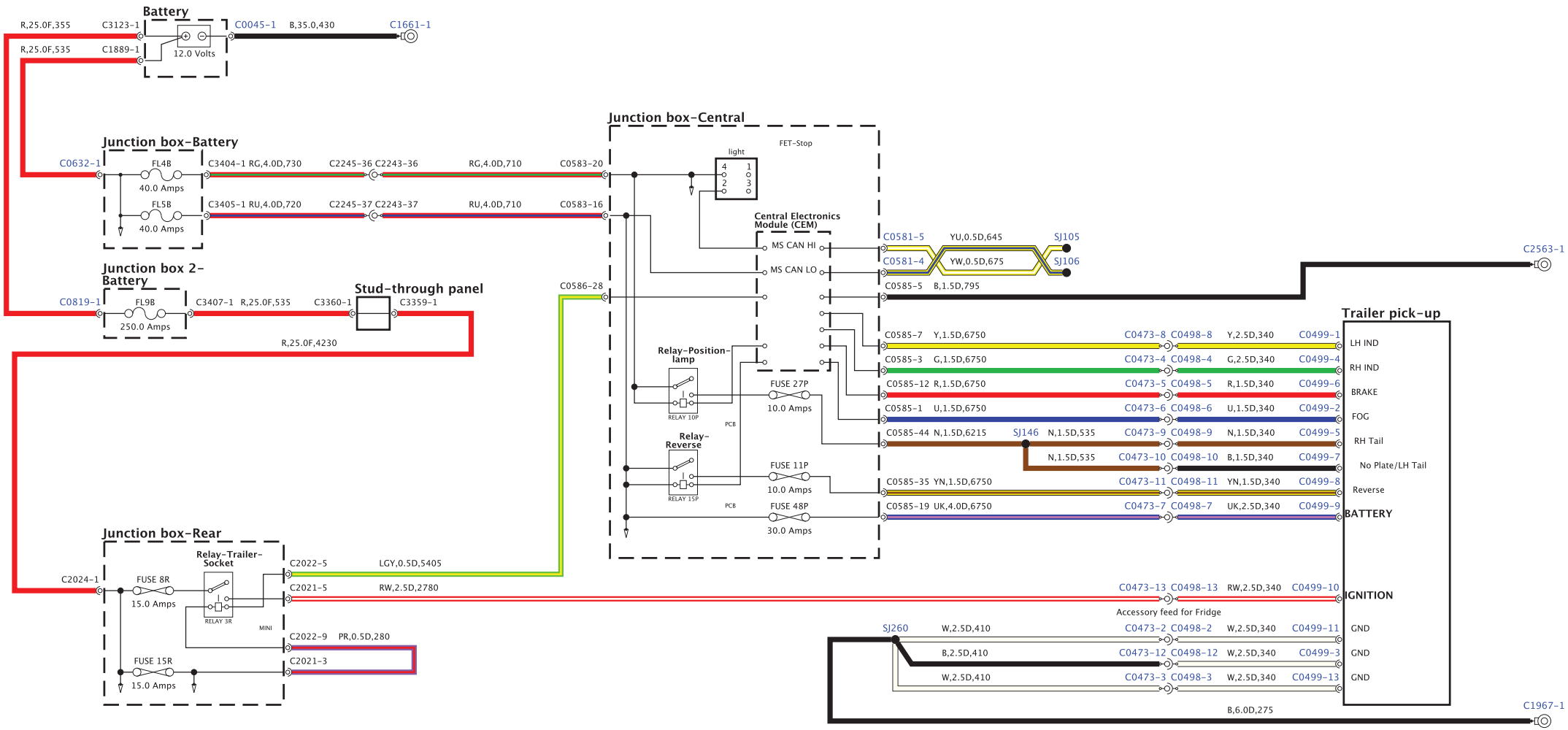

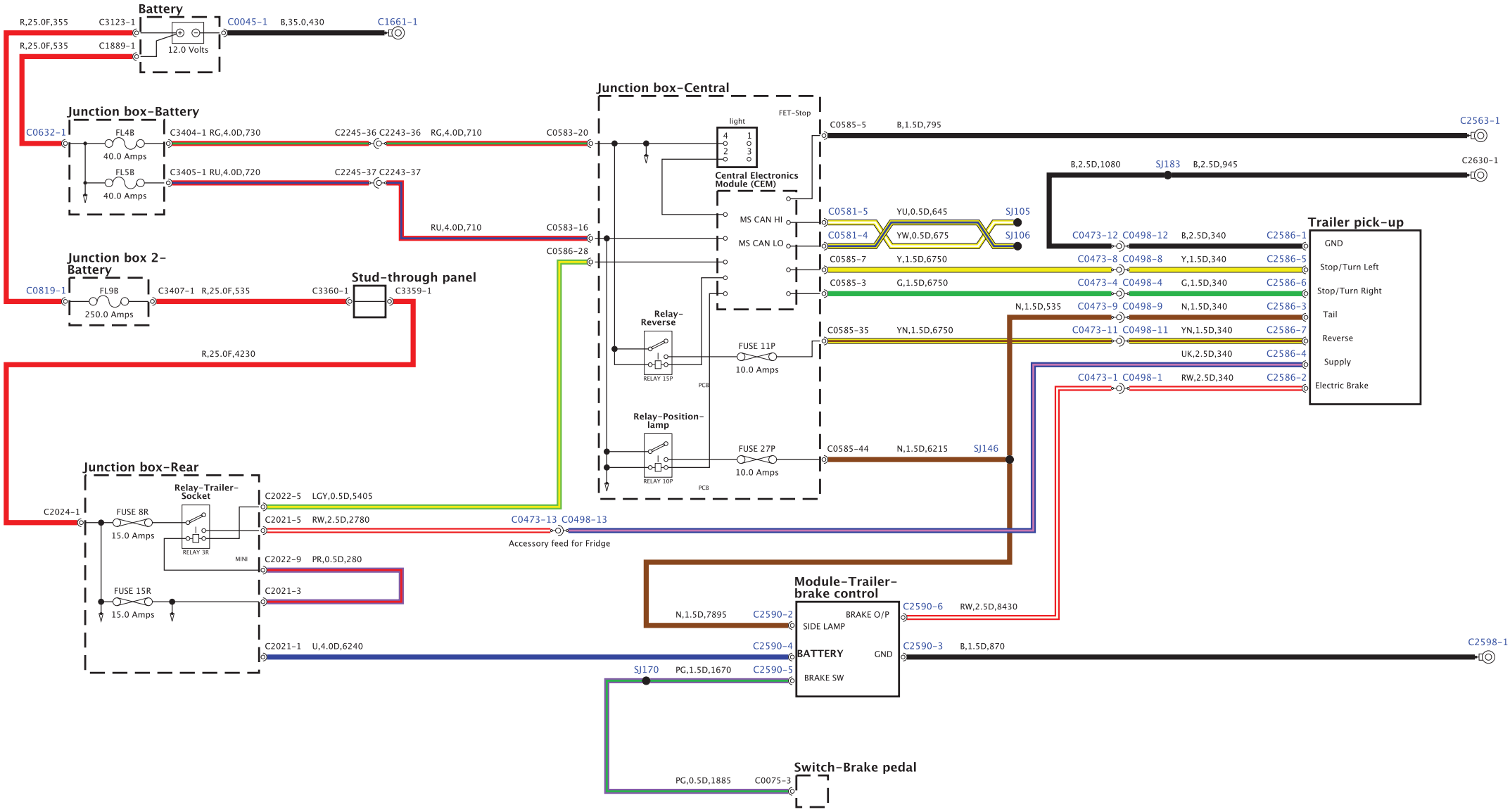
Battery
12.0 Volts
Junction box-Battery
FL4B
40.0 Amps
FL5B
40.0 Amps
Junction box 2-Battery
FL9B
250.0 Amps
Stud-through panel
Junction box-Central
light
FET-Stop
Central Electronics Module (CEM)
MS CAN HI
MS CAN LO
Relay-Reverse
RELAY 15P
PCB
FUSE 11P
10.0 Amps
Relay-Position-lamp
RELAY 10P
PCB
FUSE 27P
10.0 Amps
Junction box-Rear
Relay-Trailer-Socket
RELAY 3R
MINI
FUSE 8R
15.0 Amps
FUSE 15R
15.0 Amps
Accessory feed for Fridge
Module-Trailer-brake control
SIDE LAMP
BATTERY
BRAKE SW
BRAKE O/P
GND
Switch-Brake pedal
Trailer pick-up
GND
Stop/Turn Left
Stop/Turn Right
Tail
Reverse
Supply
Electric Brake

BH42-70100-A-A-01-03-Service (L322-11MY-JO81)

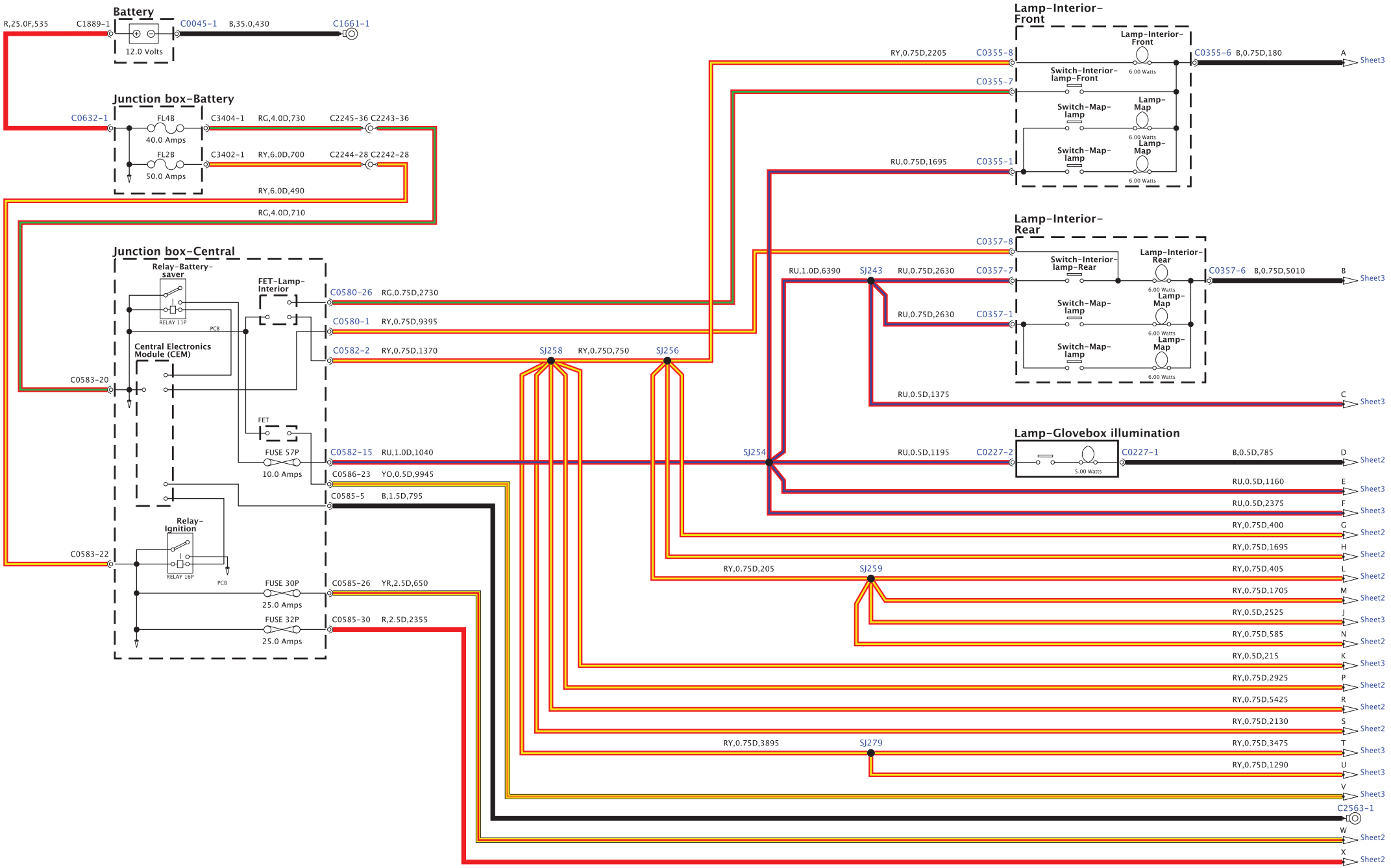

BH42-70100-A-A-02-03-Service (L322-11MY-JOB1)

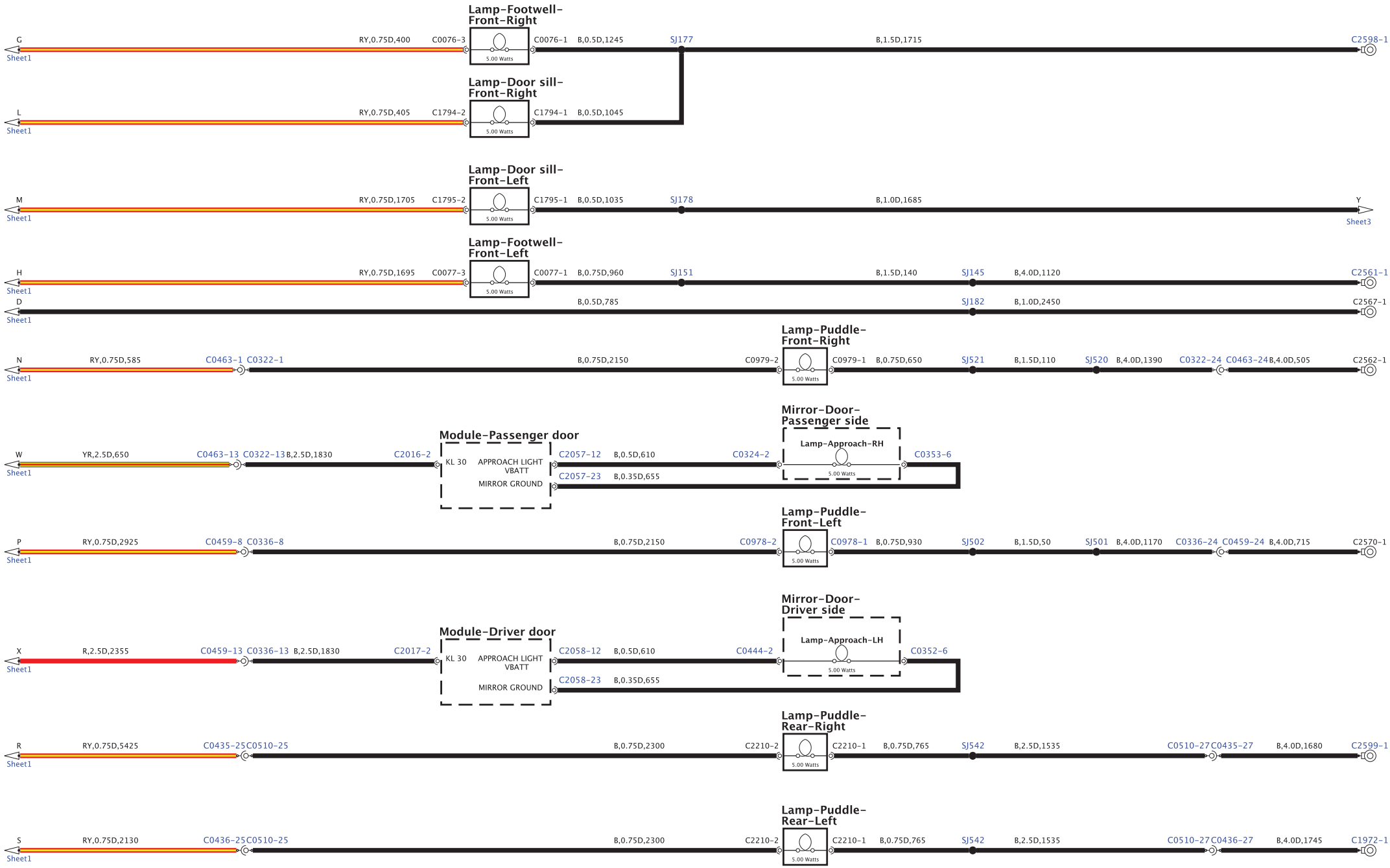

BH42-70100-A-A-03-03-Service (L322-11MY-JOB1)

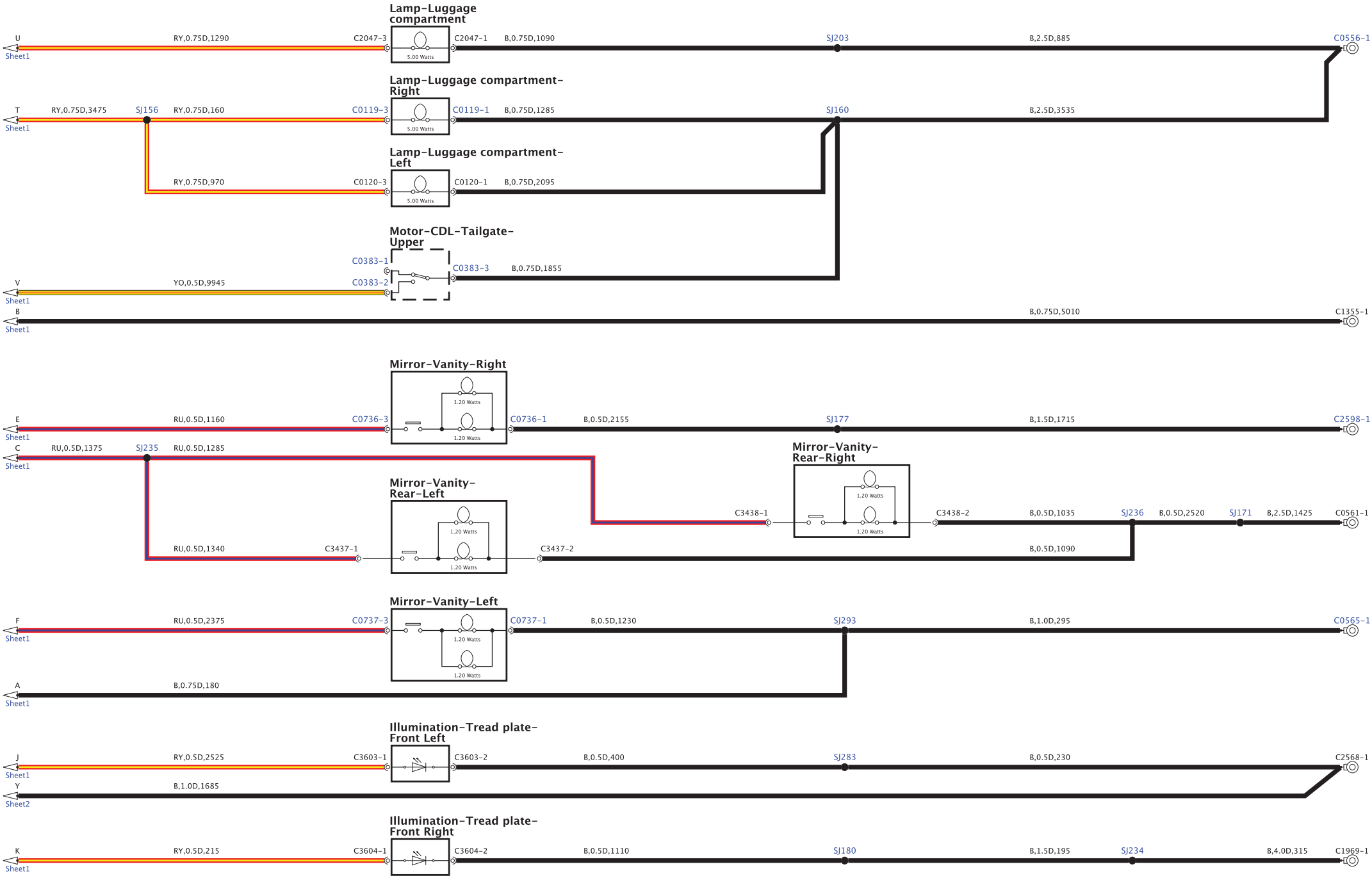

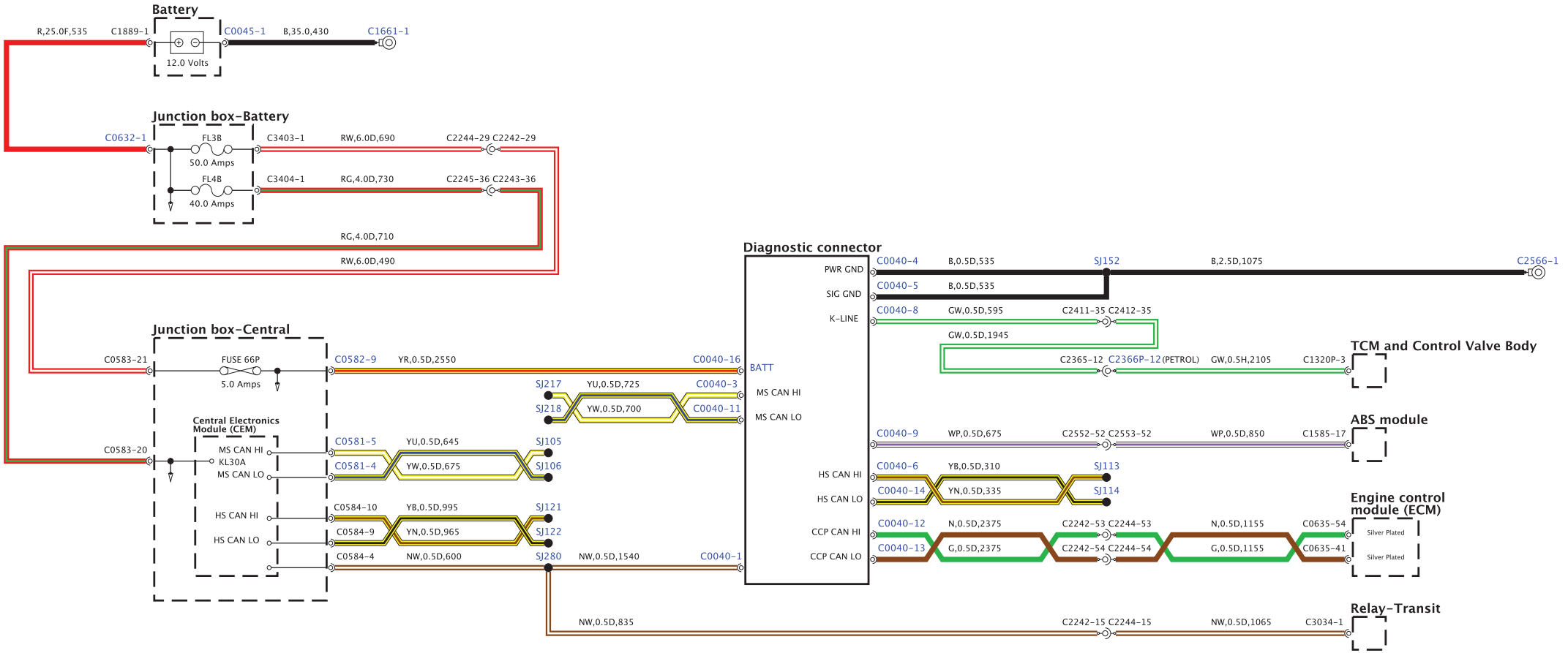
Battery
R,25.0F,535
C1889-1
C0045-1
B,35.0,430
C1661-1
12.0 Volts
Junction box-Battery
C0632-1
FL3B
50.0 Amps
C3403-1
RW,6.0D,690
C2244-29 C2242-29
FL4B
40.0 Amps
C3404-1
RG,4.0D,730
C2245-36 C2243-36
RG,4.0D,710
RW,6.0D,490
Junction box-Central
C0583-21
FUSE 66P
5.0 Amps
C0582-9
YR,0.5D,2550
C0040-16
BATT
SJ217
YU,0.5D,725
C0040-3
MS CAN HI
SJ218
YW,0.5D,700
C0040-11
MS CAN LO
Central Electronics Module (CEM)
C0583-20
MS CAN HI
KL30A
MS CAN LO
C0581-5
YU,0.5D,645
SJ105
C0581-4
YW,0.5D,675
SJ106
HS CAN HI
HS CAN LO
C0584-10
YB,0.5D,995
SJ121
C0584-9
YN,0.5D,965
SJ122
C0584-4
NW,0.5D,600
SJ280
NW,0.5D,1540
C0040-1
Diagnostic connector
PWR GND
C0040-4
B,0.5D,535
SJ152
B,2.5D,1075
C2566-1
SIG GND
C0040-5
B,0.5D,535
K-LINE
C0040-8
GW,0.5D,595
C2411-35 C2412-35
GW,0.5D,1945
TCM and Control Valve Body
C2365-12
C2366P-12 (PETROL)
GW,0.5H,2105
C1320P-3
ABS module
C0040-9
WP,0.5D,675
C2552-52 C2553-52
WP,0.5D,850
C1585-17
HS CAN HI
C0040-6
YB,0.5D,310
SJ113
HS CAN LO
C0040-14
YN,0.5D,335
SJ114
Engine control module (ECM)
CCP CAN HI
C0040-12
N,0.5D,2375
C2242-53 C2244-53
N,0.5D,1155
C0635-54
Silver Plated
CCP CAN LO
C0040-13
G,0.5D,2375
C2242-54 C2244-54
G,0.5D,1155
C0635-41
Silver Plated
Relay-Transit
NW,0.5D,835
C2242-15 C2244-15
NW,0.5D,1065
C3034-1

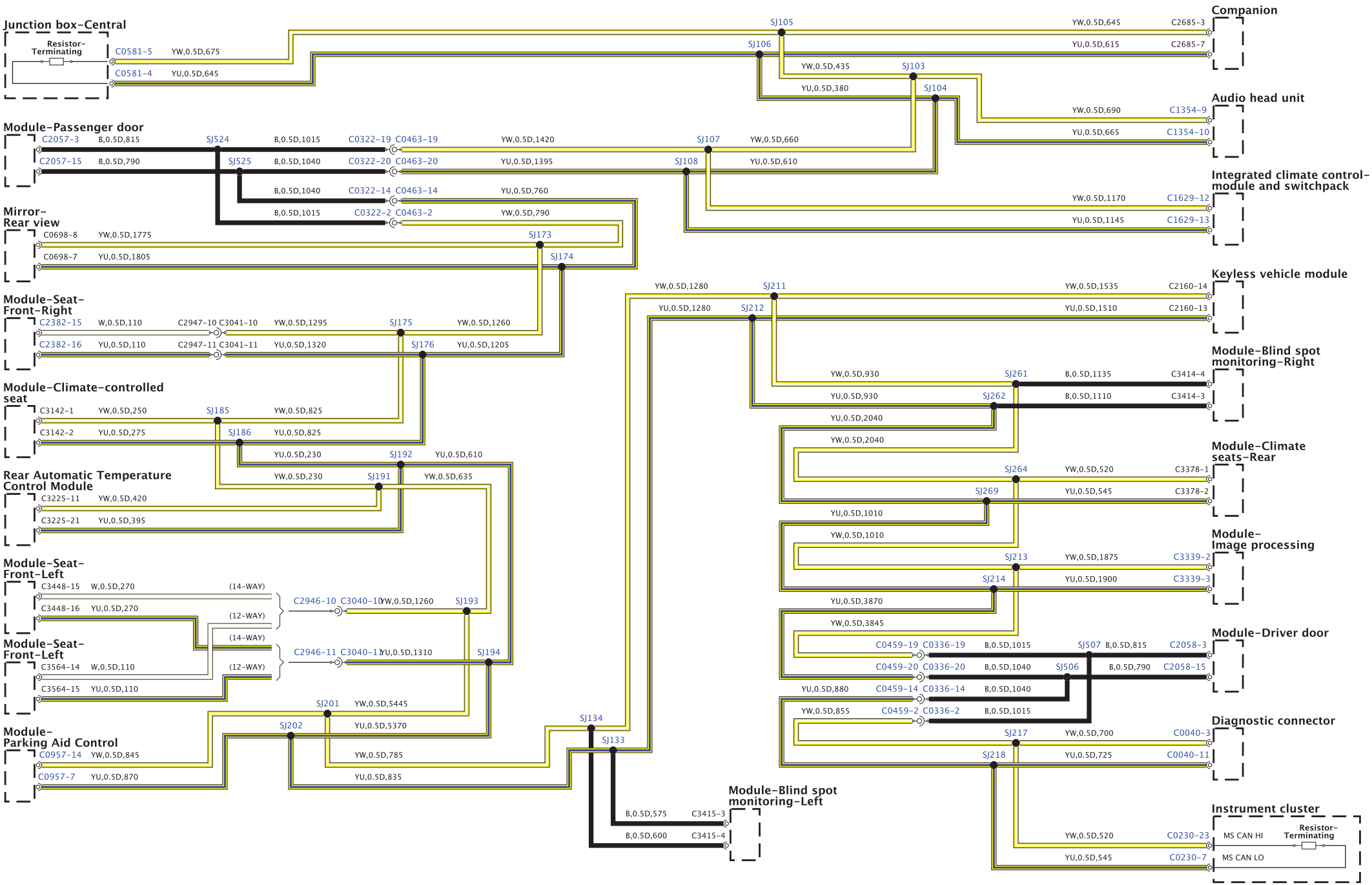
Junction box-Central
Resistor-Terminating
C0581-5 YW,0.5D,675
C0581-4 YU,0.5D,645
Module-Passenger door
C2057-3 B,0.5D,815
C2057-15 B,0.5D,790
Mirror-Rear view
C0698-8 YW,0.5D,1775
C0698-7 YU,0.5D,1805
Module-Seat-Front-Right
C2382-15 W,0.5D,110
C2382-16 YU,0.5D,110
Module-Climate-controlled seat
C3142-1 YW,0.5D,250
C3142-2 YU,0.5D,275
Rear Automatic Temperature Control Module
C3225-11 YW,0.5D,420
C3225-21 YU,0.5D,395
Module-Seat-Front-Left
C3448-15 W,0.5D,270
C3448-16 YU,0.5D,270
Module-Seat-Front-Left
C3564-14 W,0.5D,110
C3564-15 YU,0.5D,110
Module-Parking Aid Control
C0957-14 YW,0.5D,845
C0957-7 YU,0.5D,870
SJ524
SJ525
SJ173
SJ174
SJ175
SJ176
SJ185
SJ186
SJ192
SJ191
SJ193
SJ194
SJ201
SJ202
SJ134
SJ133
SJ105
SJ106
SJ103
SJ104
SJ107
SJ108
SJ211
SJ212
SJ261
SJ262
SJ264
SJ269
SJ213
SJ214
SJ507
SJ506
SJ217
SJ218
C0322-19 C0463-19
C0322-20 C0463-20
C0322-14 C0463-14
C0322-2 C0463-2
C2946-10 C3040-10
C2946-11 C3040-11
C0459-19 C0336-19
C0459-20 C0336-20
C0459-14 C0336-14
C0459-2 C0336-2
Companion
C2685-3
C2685-7
Audio head unit
C1354-9
C1354-10
Integrated climate control-module and switchpack
C1629-12
C1629-13
Keyless vehicle module
C2160-14
C2160-13
Module-Blind spot monitoring-Right
C3414-4
C3414-3
Module-Climate seats-Rear
C3378-1
C3378-2
Module-Image processing
C3339-2
C3339-3
Module-Driver door
C2058-3
C2058-15
Diagnostic connector
C0040-3
C0040-11
Module-Blind spot monitoring-Left
C3415-3
C3415-4
Instrument cluster
Resistor-Terminating
MS CAN HI
MS CAN LO
C0230-23
C0230-7

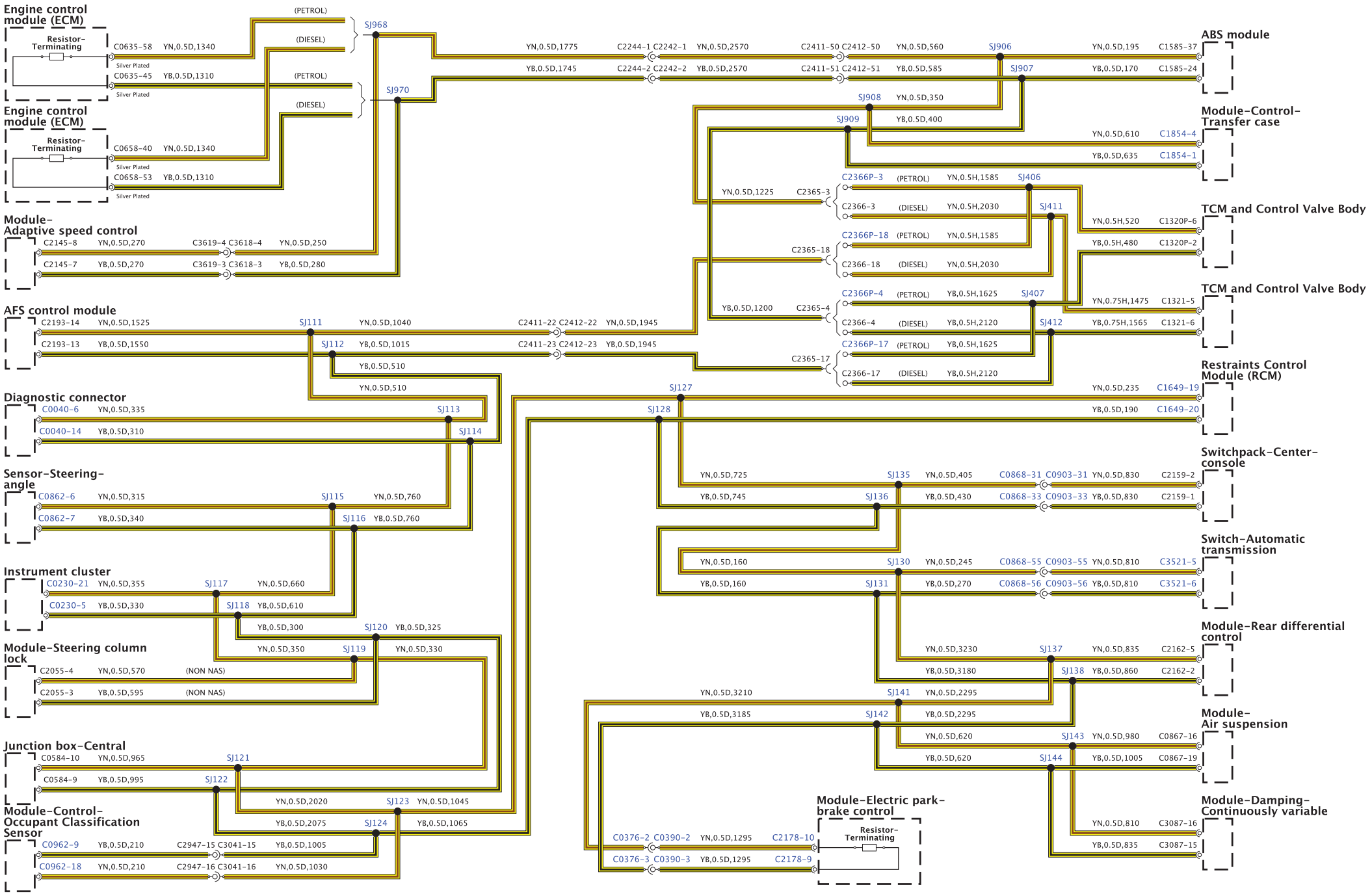
Engine control module (ECM)
Resistor-Terminating
C0635-58 YN,0.5D,1340
Silver Plated
C0635-45 YB,0.5D,1310
Silver Plated
(PETROL)
(DIESEL)
(PETROL)
(DIESEL)
SJ968
SJ970
Engine control module (ECM)
Resistor-Terminating
C0658-40 YN,0.5D,1340
Silver Plated
C0658-53 YB,0.5D,1310
Silver Plated
Module-Adaptive speed control
C2145-8 YN,0.5D,270 C3619-4 C3618-4 YN,0.5D,250
C2145-7 YB,0.5D,270 C3619-3 C3618-3 YB,0.5D,280
AFS control module
C2193-14 YN,0.5D,1525
C2193-13 YB,0.5D,1550
SJ111 YN,0.5D,1040 C2411-22 C2412-22 YN,0.5D,1945
SJ112 YB,0.5D,1015 C2411-23 C2412-23 YB,0.5D,1945
YB,0.5D,510
YN,0.5D,510
Diagnostic connector
C0040-6 YN,0.5D,335
C0040-14 YB,0.5D,310
SJ113
SJ114
Sensor-Steering-angle
C0862-6 YN,0.5D,315
C0862-7 YB,0.5D,340
SJ115 YN,0.5D,760
SJ116 YB,0.5D,760
Instrument cluster
C0230-21 YN,0.5D,355
C0230-5 YB,0.5D,330
SJ117 YN,0.5D,660
SJ118 YB,0.5D,610
YB,0.5D,300
SJ120 YB,0.5D,325
Module-Steering column lock
C2055-4 YN,0.5D,570 (NON NAS)
C2055-3 YB,0.5D,595 (NON NAS)
YN,0.5D,350
SJ119
YN,0.5D,330
Junction box-Central
C0584-10 YN,0.5D,965
C0584-9 YB,0.5D,995
SJ121
SJ122
YN,0.5D,2020
SJ123 YN,0.5D,1045
YB,0.5D,2075
SJ124 YB,0.5D,1065
Module-Control-Occupant Classification Sensor
C0962-9 YB,0.5D,210 C2947-15 C3041-15 YB,0.5D,1005
C0962-18 YN,0.5D,210 C2947-16 C3041-16 YN,0.5D,1030
YN,0.5D,1775 C2244-1 C2242-1 YN,0.5D,2570 C2411-50 C2412-50 YN,0.5D,560
YB,0.5D,1745 C2244-2 C2242-2 YB,0.5D,2570 C2411-51 C2412-51 YB,0.5D,585
SJ906
SJ907
SJ908 YN,0.5D,350
SJ909 YB,0.5D,400
YN,0.5D,610 C1854-4
YB,0.5D,635 C1854-1
Module-Control-Transfer case
ABS module
YN,0.5D,195 C1585-37
YB,0.5D,170 C1585-24
YN,0.5D,1225 C2365-3
C2366P-3 (PETROL) YN,0.5H,1585 SJ406
C2366-3 (DIESEL) YN,0.5H,2030 SJ411
C2365-18
C2366P-18 (PETROL) YN,0.5H,1585
C2366-18 (DIESEL) YN,0.5H,2030
YB,0.5D,1200 C2365-4
C2366P-4 (PETROL) YB,0.5H,1625 SJ407
C2366-4 (DIESEL) YB,0.5H,2120 SJ412
C2365-17
C2366P-17 (PETROL) YB,0.5H,1625
C2366-17 (DIESEL) YB,0.5H,2120
YN,0.5H,520 C1320P-6
YB,0.5H,480 C1320P-2
TCM and Control Valve Body
YN,0.75H,1475 C1321-5
YB,0.75H,1565 C1321-6
TCM and Control Valve Body
SJ127
SJ128
YN,0.5D,235 C1649-19
YB,0.5D,190 C1649-20
Restraints Control Module (RCM)
YN,0.5D,725
YB,0.5D,745
SJ135 YN,0.5D,405 C0868-31 C0903-31 YN,0.5D,830 C2159-2
SJ136 YB,0.5D,430 C0868-33 C0903-33 YB,0.5D,830 C2159-1
Switchpack-Center-console
YN,0.5D,160
YB,0.5D,160
SJ130 YN,0.5D,245 C0868-55 C0903-55 YN,0.5D,810 C3521-5
SJ131 YB,0.5D,270 C0868-56 C0903-56 YB,0.5D,810 C3521-6
Switch-Automatic transmission
YN,0.5D,3230
YB,0.5D,3180
SJ137 YN,0.5D,835 C2162-5
SJ138 YB,0.5D,860 C2162-2
Module-Rear differential control
YN,0.5D,3210
YB,0.5D,3185
SJ141 YN,0.5D,2295
SJ142 YB,0.5D,2295
YN,0.5D,620
YB,0.5D,620
SJ143 YN,0.5D,980 C0867-16
SJ144 YB,0.5D,1005 C0867-19
Module-Air suspension
YN,0.5D,810 C3087-16
YB,0.5D,835 C3087-15
Module-Damping-Continuously variable
Module-Electric park-brake control
C0376-2 C0390-2 YN,0.5D,1295 C2178-10
C0376-3 C0390-3 YB,0.5D,1295 C2178-9
Resistor-Terminating

8H42-70016-C-A-01-01-Service (L322-11MY-JOB1)

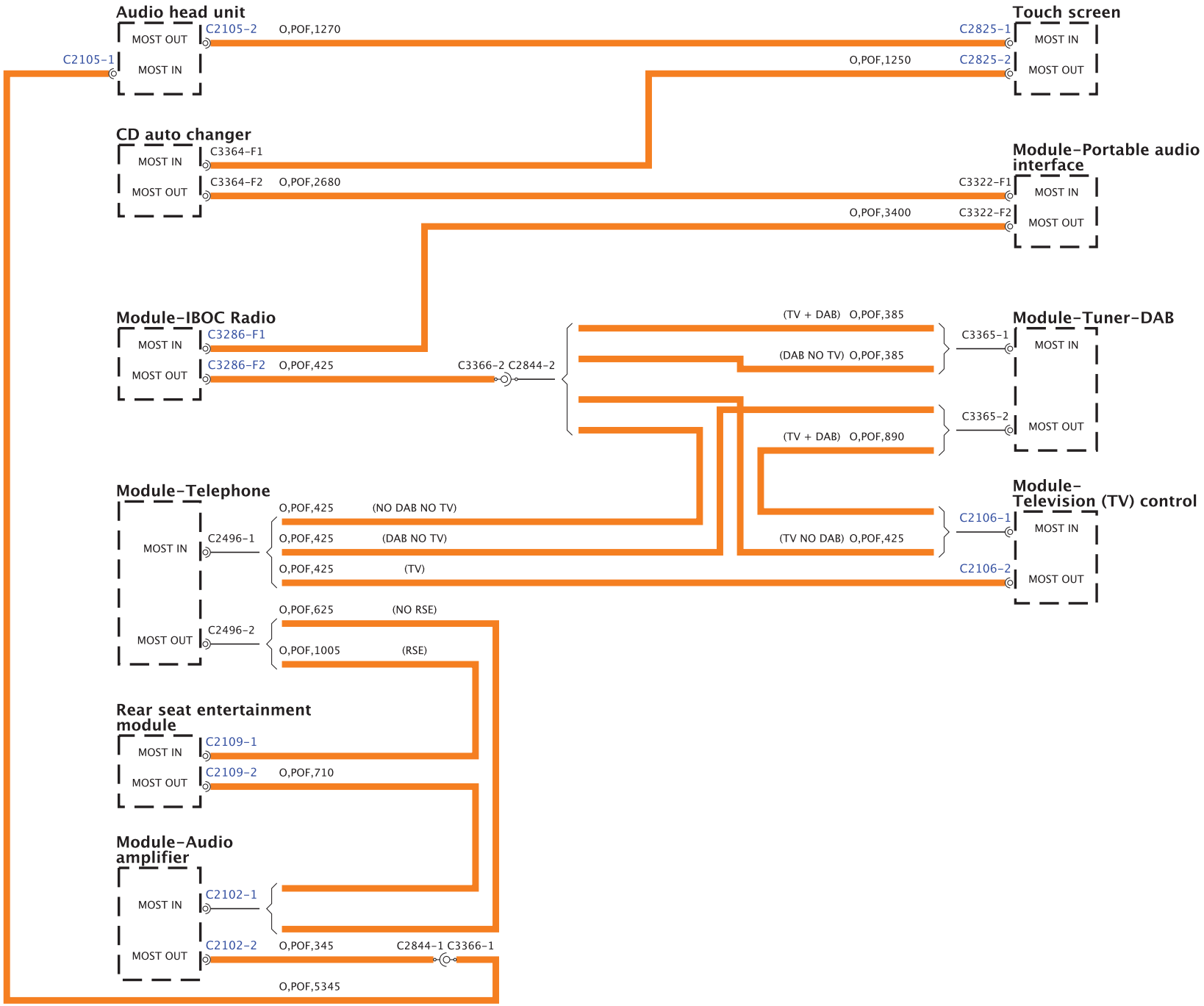

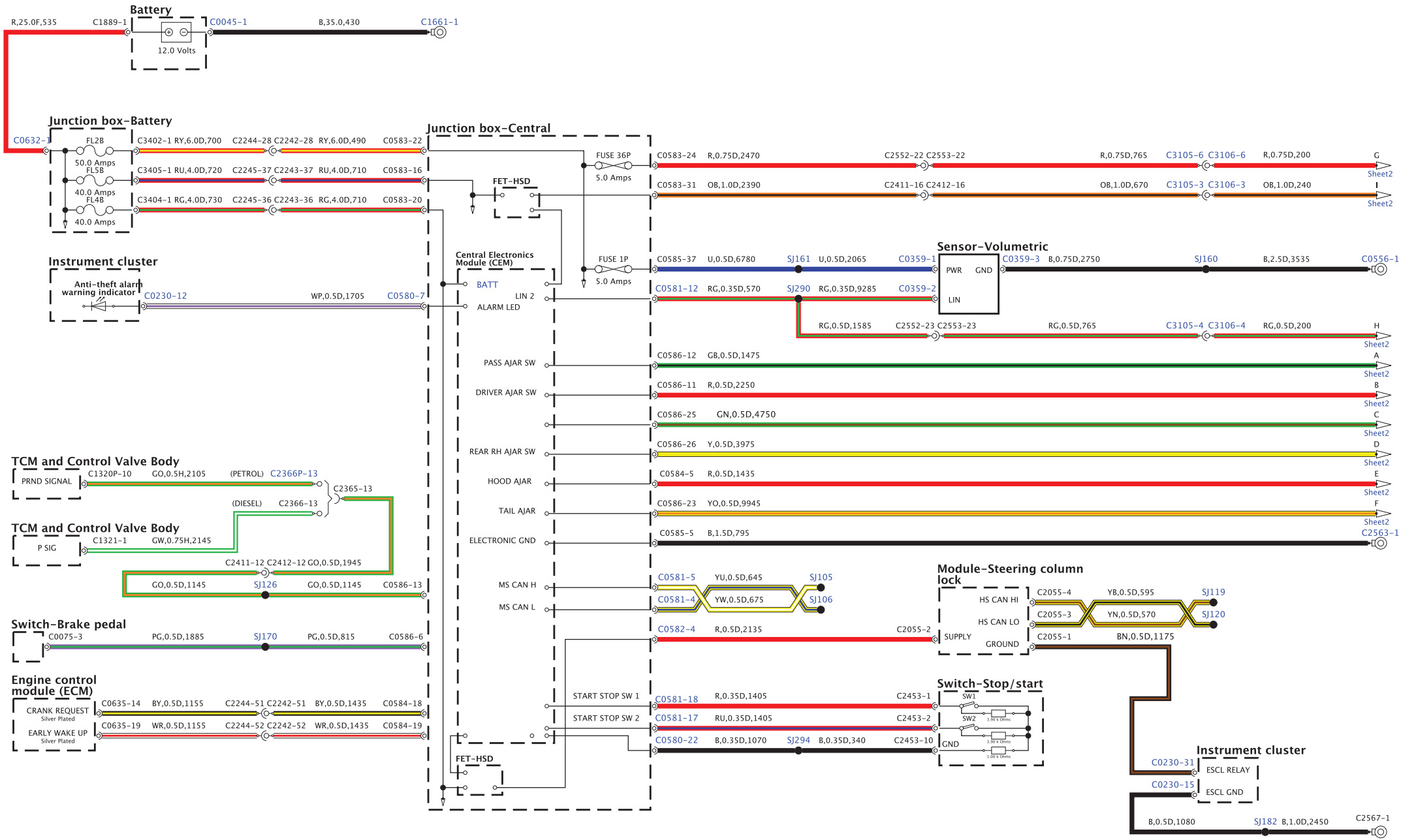
Battery
R,25.0F,535
C1889-1
C0045-1
B,35.0,430
C1661-1
12.0 Volts
Junction box-Battery
C0632-1
FL2B
50.0 Amps
FL5B
40.0 Amps
FL4B
40.0 Amps
C3402-1 RY,6.0D,700
C2244-28 C2242-28 RY,6.0D,490
C0583-22
C3405-1 RU,4.0D,720
C2245-37 C2243-37 RU,4.0D,710
C0583-16
C3404-1 RG,4.0D,730
C2245-36 C2243-36 RG,4.0D,710
C0583-20
Junction box-Central
FET-HSD
FUSE 36P
5.0 Amps
C0583-24 R,0.75D,2470
C2552-22 C2553-22
R,0.75D,765
C3105-6 C3106-6
R,0.75D,200
G
Sheet2
C0583-31 OB,1.0D,2390
C2411-16 C2412-16
OB,1.0D,670
C3105-3 C3106-3
OB,1.0D,240
I
Sheet2
Sensor-Volumetric
Instrument cluster
Anti-theft alarm warning indicator
C0230-12
WP,0.5D,1705
C0580-7
Central Electronics Module (CEM)
BATT
LIN 2
ALARM LED
FUSE 1P
5.0 Amps
C0585-37 U,0.5D,6780
SJ161 U,0.5D,2065
C0359-1
PWR
GND
C0359-3 B,0.75D,2750
SJ160
B,2.5D,3535
C0556-1
C0581-12 RG,0.35D,570
SJ290 RG,0.35D,9285
C0359-2
LIN
RG,0.5D,1585
C2552-23 C2553-23
RG,0.5D,765
C3105-4 C3106-4
RG,0.5D,200
H
Sheet2
PASS AJAR SW
C0586-12 GB,0.5D,1475
A
Sheet2
DRIVER AJAR SW
C0586-11 R,0.5D,2250
B
Sheet2
C0586-25 GN,0.5D,4750
C
Sheet2
REAR RH AJAR SW
C0586-26 Y,0.5D,3975
D
Sheet2
HOOD AJAR
C0584-5 R,0.5D,1435
E
Sheet2
TAIL AJAR
C0586-23 YO,0.5D,9945
F
Sheet2
ELECTRONIC GND
C0585-5 B,1.5D,795
C2563-1
TCM and Control Valve Body
PRND SIGNAL
C1320P-10 GO,0.5H,2105
(PETROL) C2366P-13
C2365-13
(DIESEL) C2366-13
TCM and Control Valve Body
P SIG
C1321-1 GW,0.75H,2145
C2411-12 C2412-12 GO,0.5D,1945
GO,0.5D,1145
SJ126
GO,0.5D,1145
C0586-13
MS CAN H
MS CAN L
C0581-5 YU,0.5D,645
SJ105
C0581-4 YW,0.5D,675
SJ106
Module-Steering column lock
HS CAN HI
HS CAN LO
SUPPLY
GROUND
C2055-4 YB,0.5D,595
SJ119
C2055-3 YN,0.5D,570
SJ120
C2055-1 BN,0.5D,1175
Switch-Brake pedal
C0075-3 PG,0.5D,1885
SJ170
PG,0.5D,815
C0586-6
C0582-4 R,0.5D,2135
C2055-2
Engine control module (ECM)
CRANK REQUEST
Silver Plated
EARLY WAKE UP
Silver Plated
C0635-14 BY,0.5D,1155
C2244-51 C2242-51 BY,0.5D,1435
C0584-18
C0635-19 WR,0.5D,1155
C2244-52 C2242-52 WR,0.5D,1435
C0584-19
START STOP SW 1
START STOP SW 2
C0581-18 R,0.35D,1405
C2453-1
C0581-17 RU,0.35D,1405
C2453-2
C0580-22 B,0.35D,1070
SJ294 B,0.35D,340
C2453-10
Switch-Stop/start
SW1
SW2
GND
3.90 k Ohms
1.00 k Ohms
FET-HSD
Instrument cluster
C0230-31
ESCL RELAY
C0230-15
ESCL GND
B,0.5D,1080
SJ182 B,1.0D,2450
C2567-1

BH42-70404-A-A-02-02-Service (L322-11MY-JOB1)

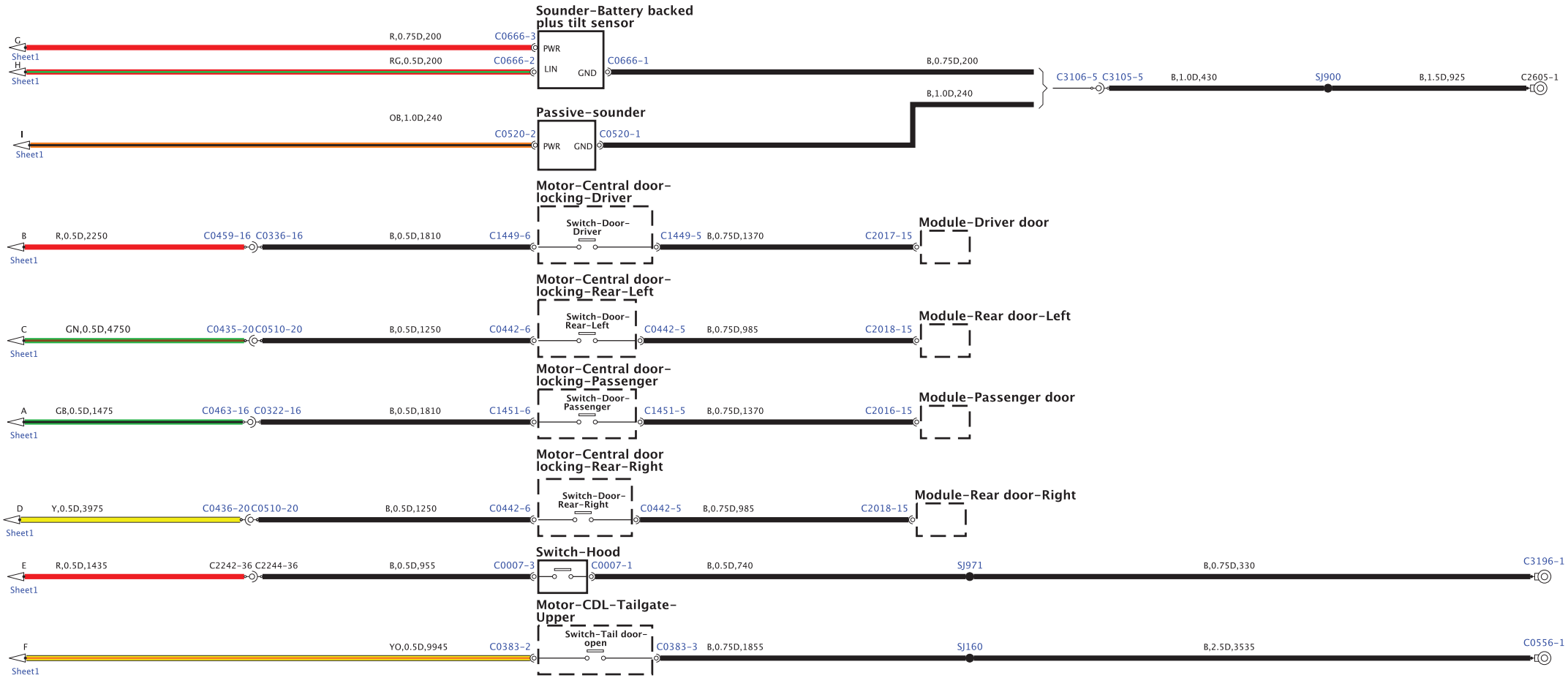

BH42-70404-A-A-02-02-Service (L322-11MY-JOB1)

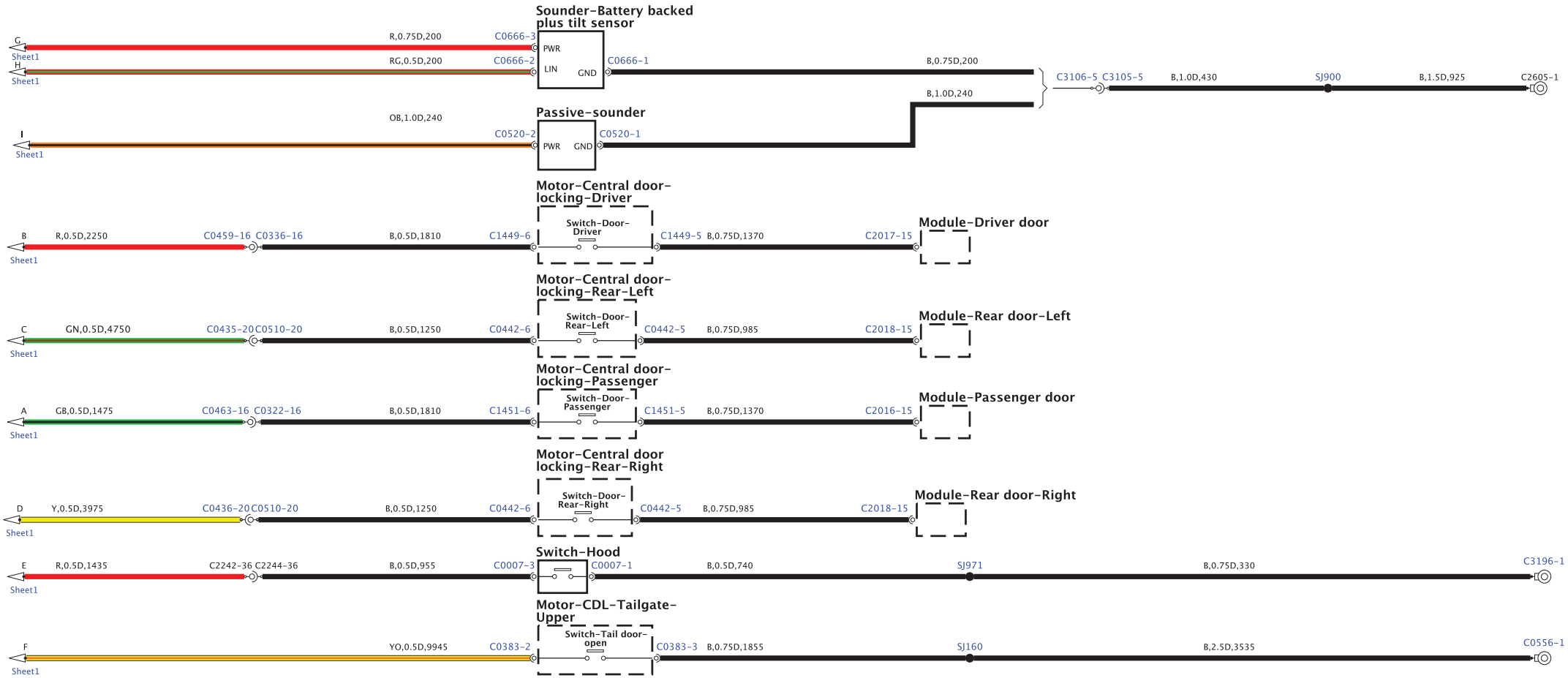

BH42-70411-A-A-01-02-Service (L322-11MY-JOB1)

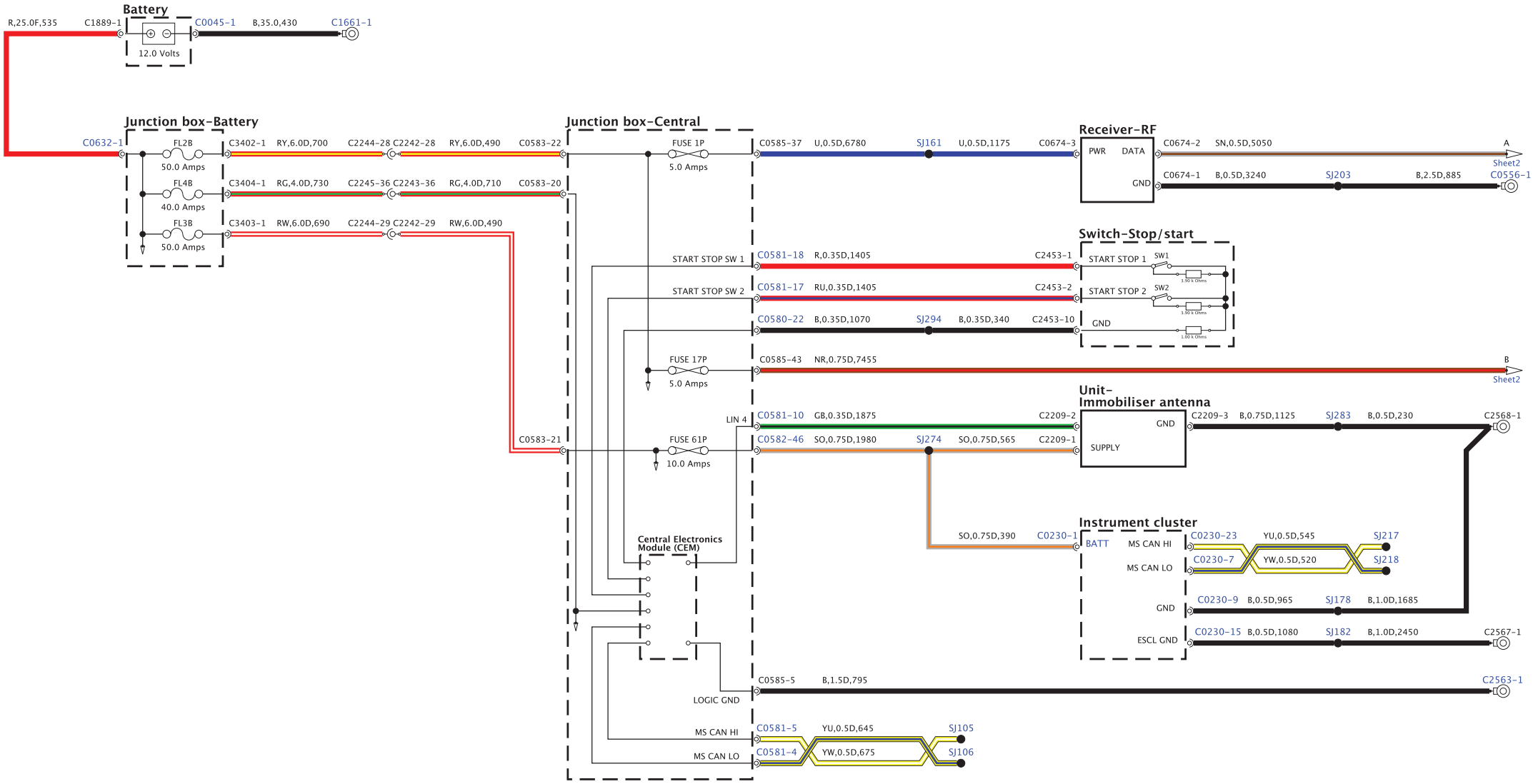

BH42-70411-A-A-02-02-Service (L322-11MY-J081)

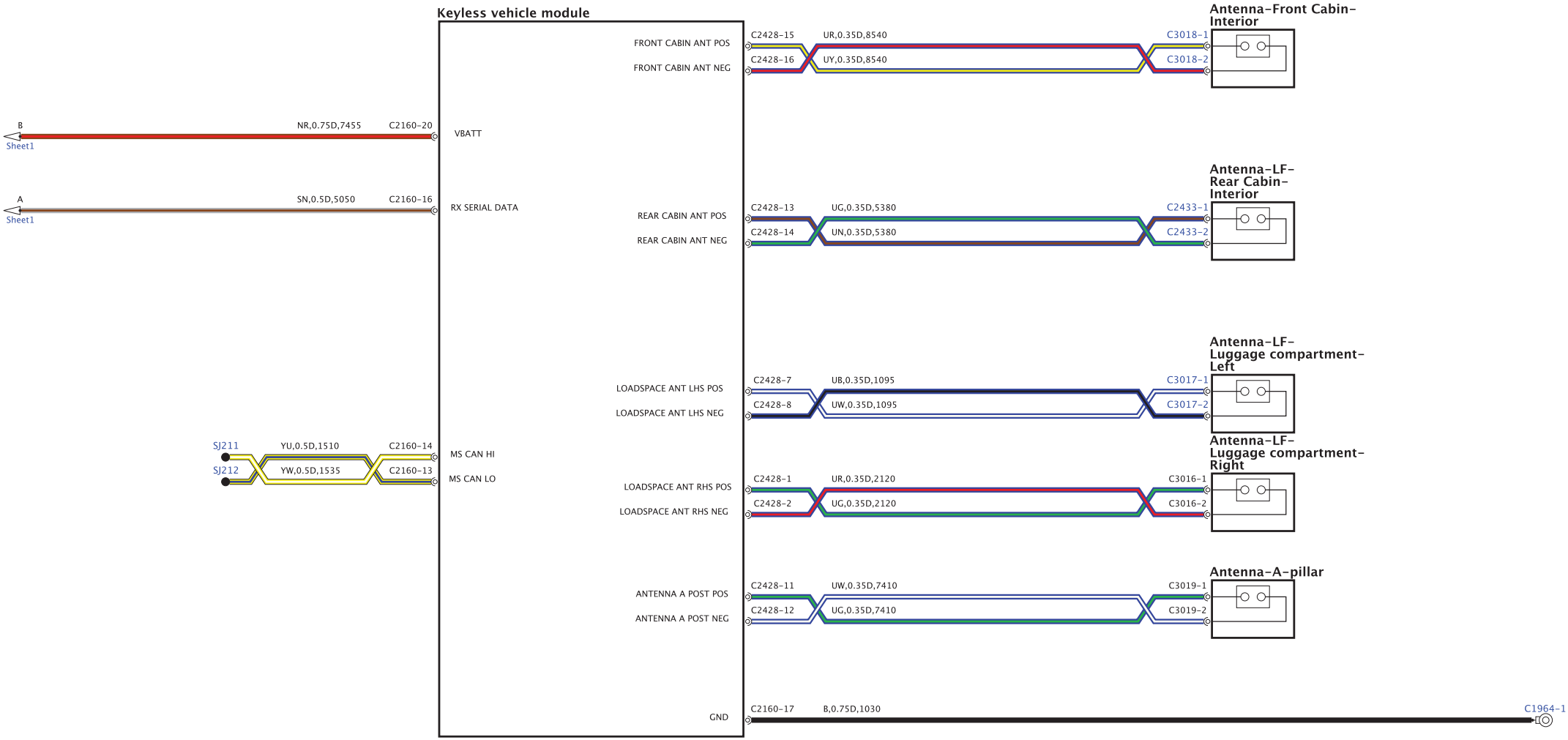

BH42-70333-A-A-01-01-Service (L322-11MY-JOB1)



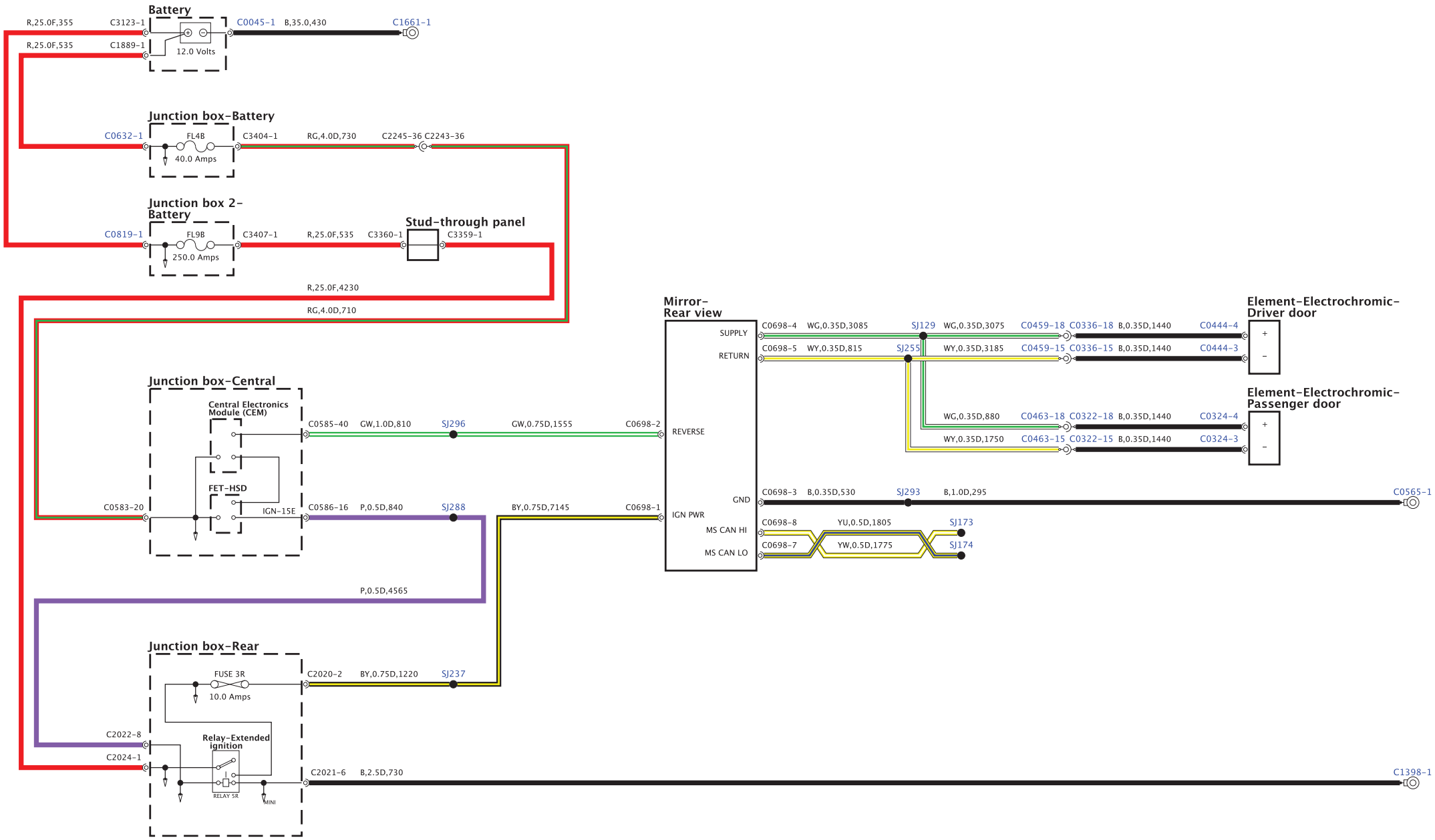
Battery
R,25.0F,355
C3123-1
C0045-1
B,35.0,430
C1661-1
R,25.0F,535
C1889-1
12.0 Volts
Junction box-Battery
C0632-1
FL4B
C3404-1
RG,4.0D,730
C2245-36 C2243-36
40.0 Amps
Junction box 2-Battery
C0819-1
FL9B
C3407-1
R,25.0F,535
C3360-1
Stud-through panel
C3359-1
250.0 Amps
R,25.0F,4230
RG,4.0D,710
Junction box-Central
Central Electronics Module (CEM)
C0585-40
GW,1.0D,810
SJ296
GW,0.75D,1555
C0698-2
FET-HSD
C0583-20
IGN-15E
C0586-16
P,0.5D,840
SJ288
BY,0.75D,7145
C0698-1
P,0.5D,4565
Junction box-Rear
FUSE 3R
10.0 Amps
C2020-2
BY,0.75D,1220
SJ237
C2022-8
Relay-Extended ignition
C2024-1
RELAY 5R
MINI
C2021-6
B,2.5D,730
C1398-1
Mirror-Rear view
SUPPLY
RETURN
REVERSE
GND
IGN PWR
MS CAN HI
MS CAN LO
C0698-4
WG,0.35D,3085
SJ129
WG,0.35D,3075
C0459-18 C0336-18
B,0.35D,1440
C0444-4
C0698-5
WY,0.35D,815
SJ255
WY,0.35D,3185
C0459-15 C0336-15
B,0.35D,1440
C0444-3
Element-Electrochromic-Driver door
+
-
WG,0.35D,880
C0463-18 C0322-18
B,0.35D,1440
C0324-4
WY,0.35D,1750
C0463-15 C0322-15
B,0.35D,1440
C0324-3
Element-Electrochromic-Passenger door
+
-
C0698-3
B,0.35D,530
SJ293
B,1.0D,295
C0565-1
C0698-8
YU,0.5D,1805
SJ173
C0698-7
YW,0.5D,1775
SJ174

BH42-70483-A-A-01-01-Service (L322-11MY-JOB1)

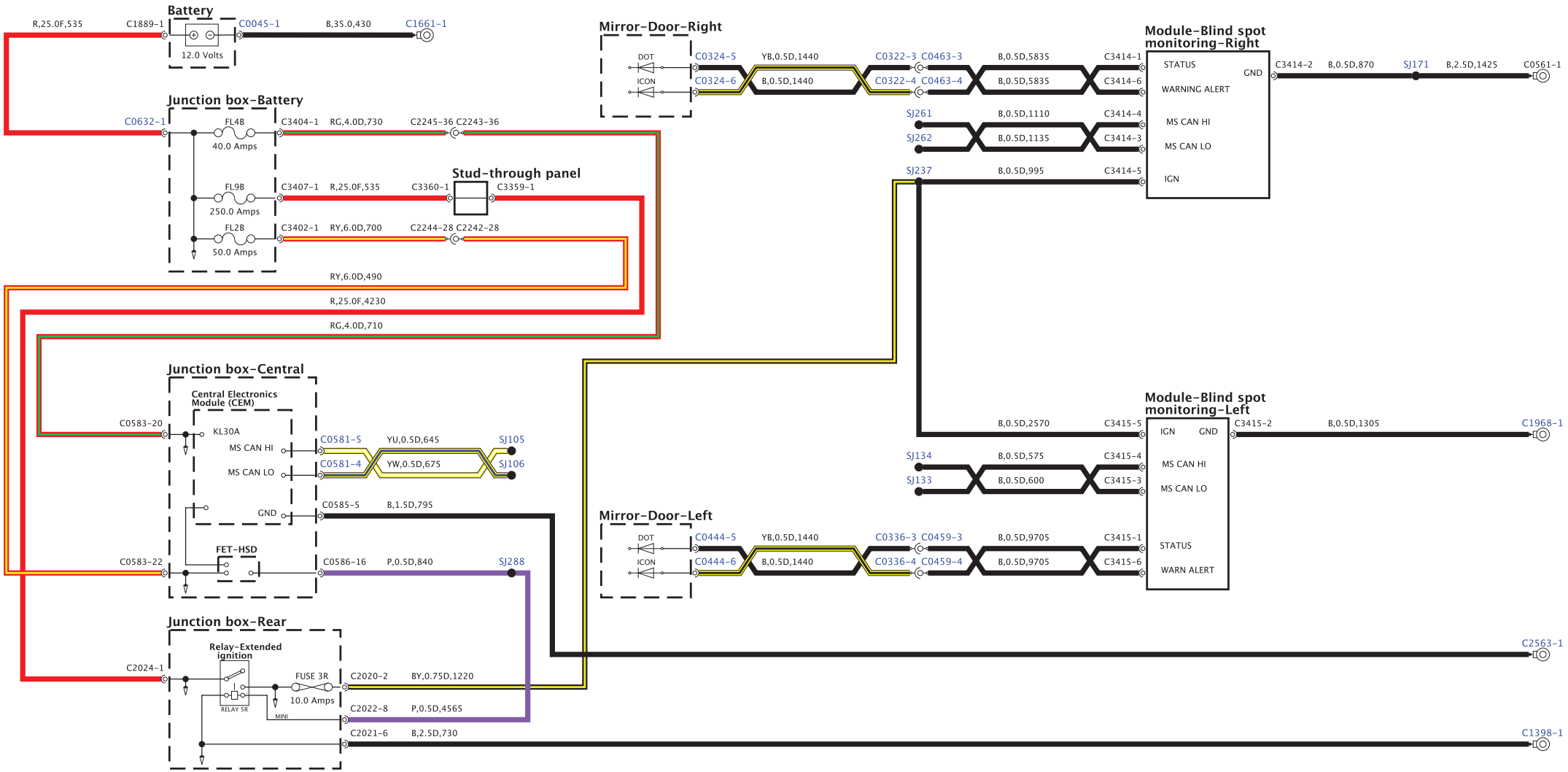

BH42-70346-A-A-01-01-Service (L322-11MY-JOB1)

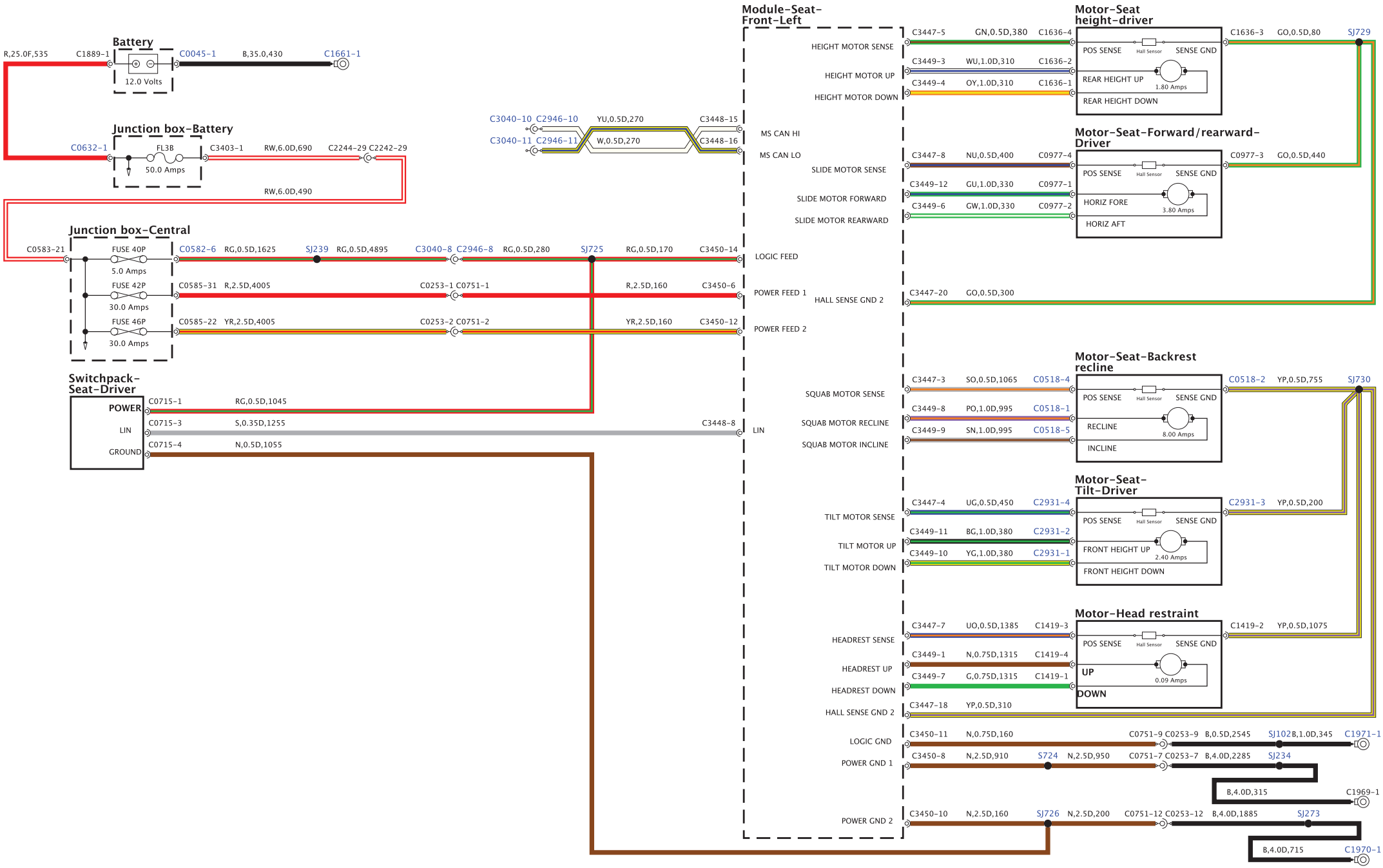

BH42-70346-E-A-01-01-Service (L322-11MY-J081)

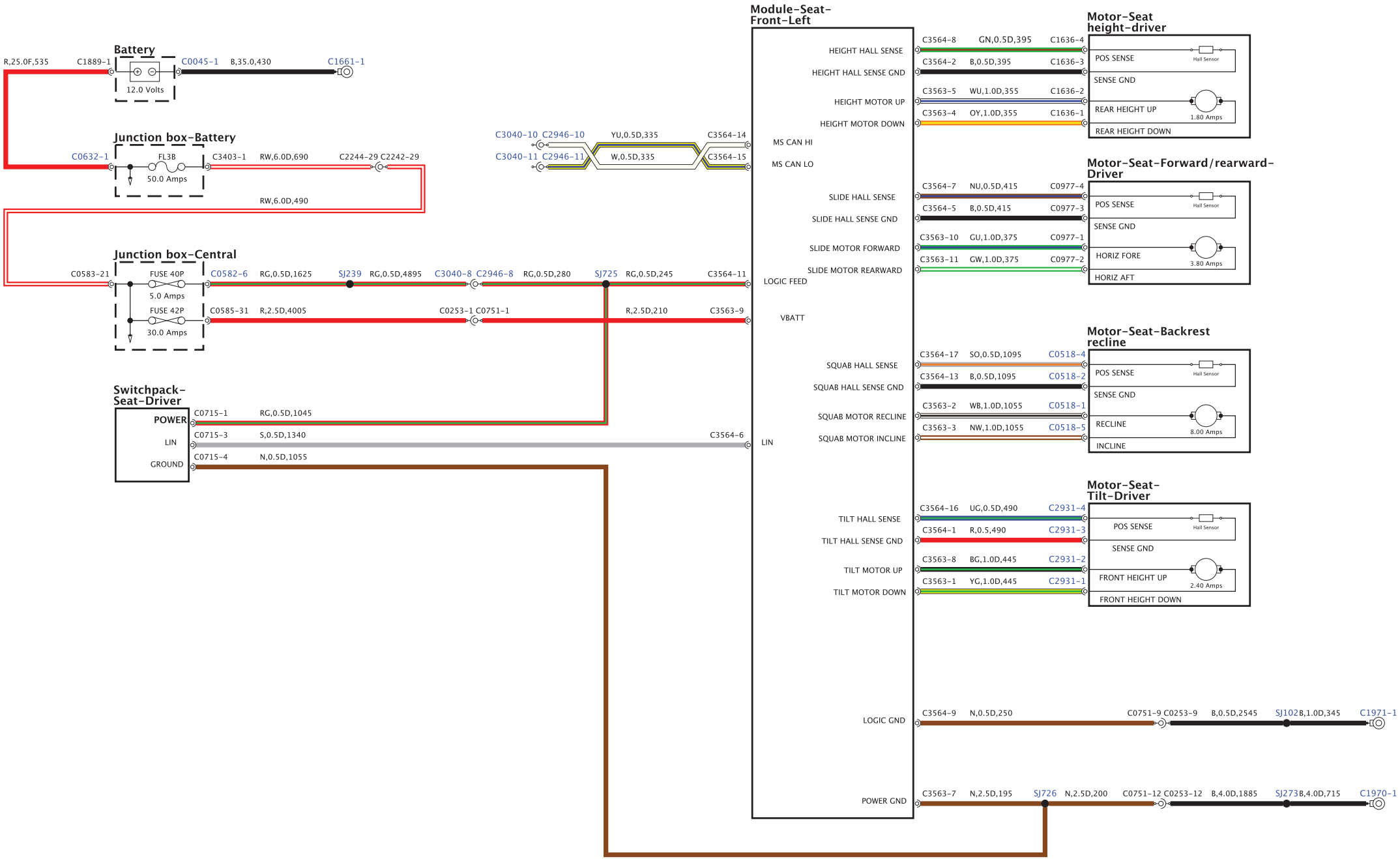

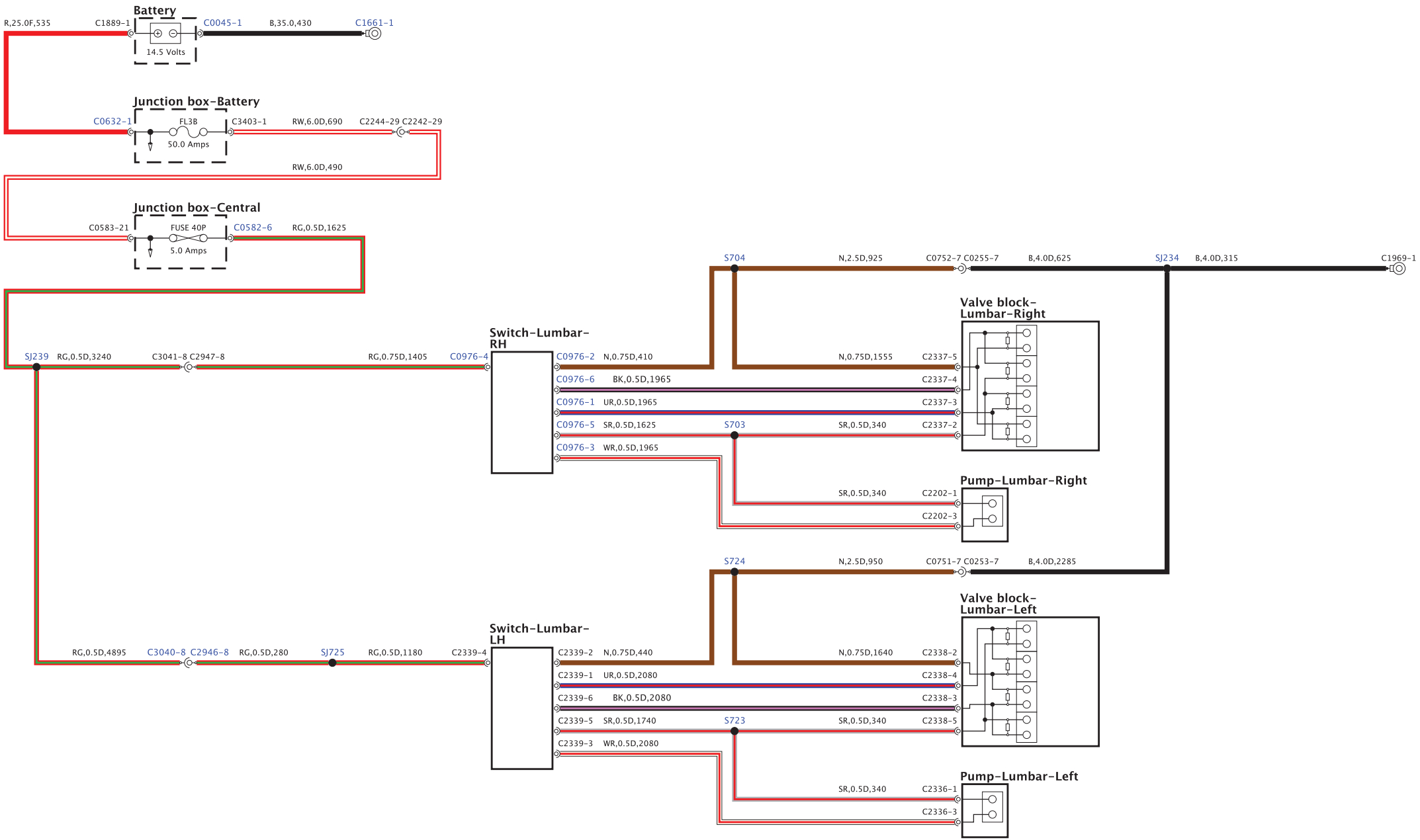
Battery
R,25.0F,535
C1889-1
C0045-1
B,35.0,430
C1661-1
14.5 Volts
Junction box-Battery
C0632-1
FL3B
C3403-1
RW,6.0D,690
C2244-29 C2242-29
50.0 Amps
RW,6.0D,490
Junction box-Central
C0583-21
FUSE 40P
C0582-6
RG,0.5D,1625
5.0 Amps
S704
N,2.5D,925
C0752-7 C0255-7
B,4.0D,625
SJ234
B,4.0D,315
C1969-1
Valve block-Lumbar-Right
Switch-Lumbar-RH
SJ239
RG,0.5D,3240
C3041-8 C2947-8
RG,0.75D,1405
C0976-4
C0976-2
N,0.75D,410
N,0.75D,1555
C2337-5
C0976-6
BK,0.5D,1965
C2337-4
C0976-1
UR,0.5D,1965
C2337-3
C0976-5
SR,0.5D,1625
S703
SR,0.5D,340
C2337-2
C0976-3
WR,0.5D,1965
Pump-Lumbar-Right
SR,0.5D,340
C2202-1
C2202-3
S724
N,2.5D,950
C0751-7 C0253-7
B,4.0D,2285
Valve block-Lumbar-Left
Switch-Lumbar-LH
RG,0.5D,4895
C3040-8 C2946-8
RG,0.5D,280
SJ725
RG,0.5D,1180
C2339-4
C2339-2
N,0.75D,440
N,0.75D,1640
C2338-2
C2339-1
UR,0.5D,2080
C2338-4
C2339-6
BK,0.5D,2080
C2338-3
C2339-5
SR,0.5D,1740
S723
SR,0.5D,340
C2338-5
C2339-3
WR,0.5D,2080
Pump-Lumbar-Left
SR,0.5D,340
C2336-1
C2336-3

BH42-70347-B-A-01-01-Service (L322-11MY-JOB1)

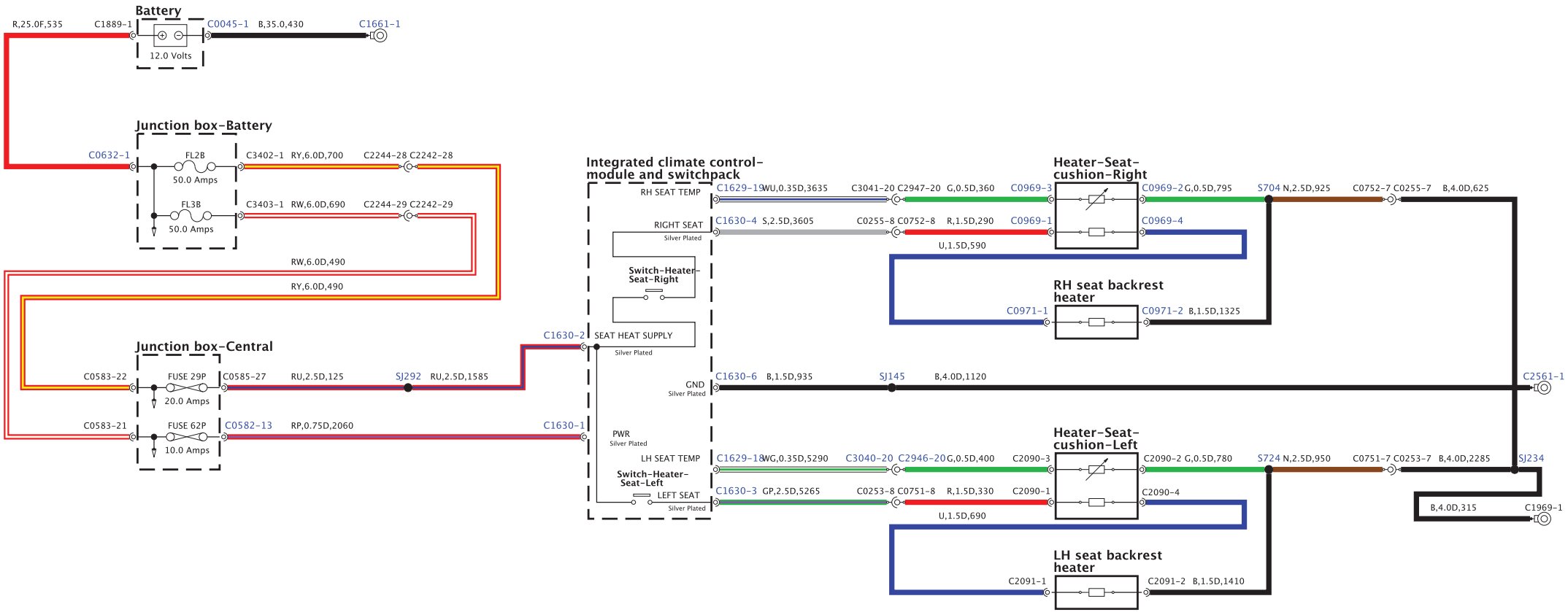

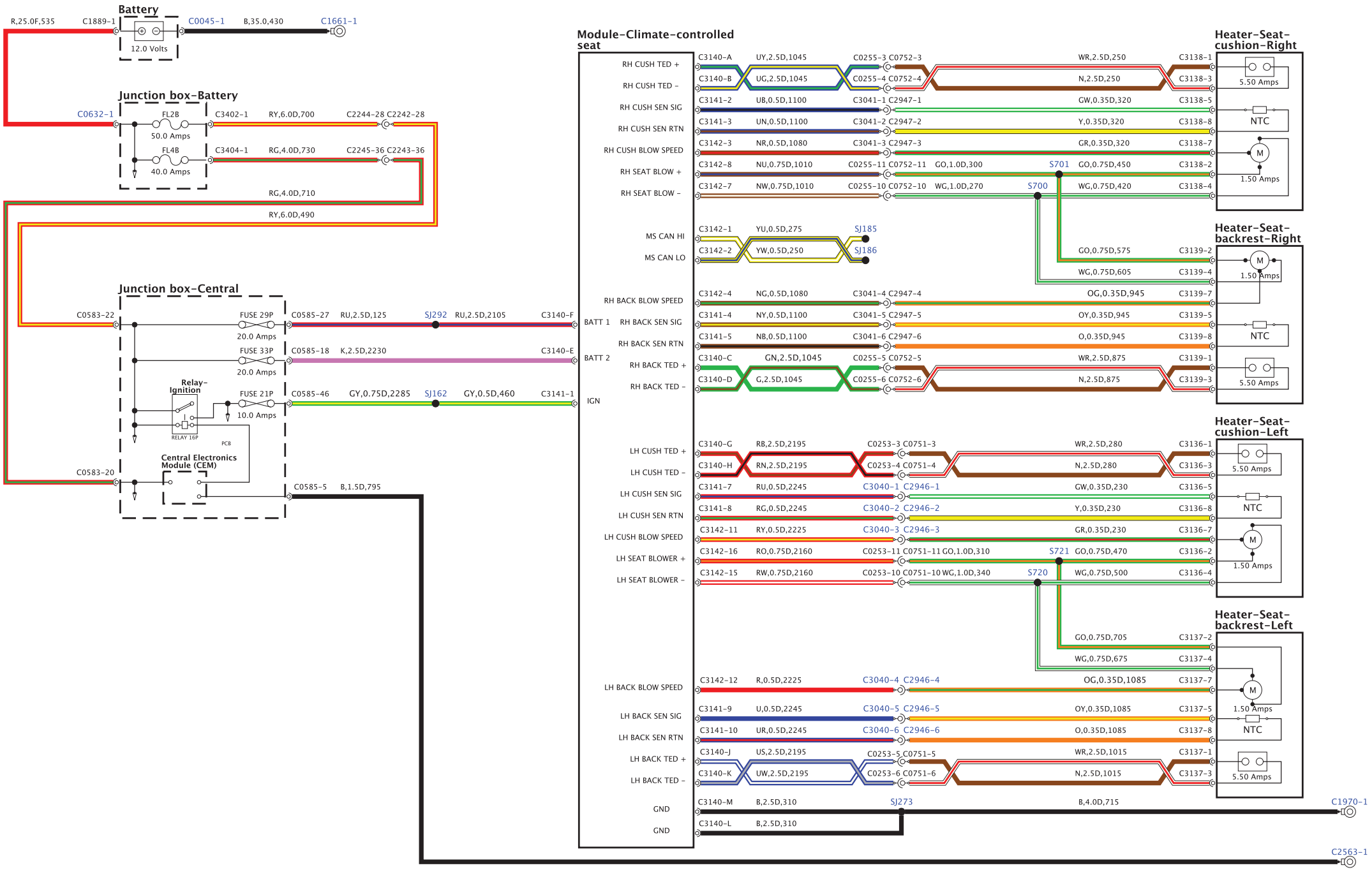
Battery
R,25.0F,535
C1889-1
C0045-1
B,35.0,430
C1661-1
12.0 Volts
Junction box-Battery
C0632-1
FL2B
50.0 Amps
C3402-1
RY,6.0D,700
C2244-28 C2242-28
FL4B
40.0 Amps
C3404-1
RG,4.0D,730
C2245-36 C2243-36
RG,4.0D,710
RY,6.0D,490
Junction box-Central
C0583-22
FUSE 29P
20.0 Amps
C0585-27
RU,2.5D,125
SJ292
RU,2.5D,2105
C3140-F
FUSE 33P
20.0 Amps
C0585-18
K,2.5D,2230
C3140-E
Relay-Ignition
RELAY 16P
PCB
FUSE 21P
10.0 Amps
C0585-46
GY,0.75D,2285
SJ162
GY,0.5D,460
C3141-1
Central Electronics Module (CEM)
C0583-20
C0585-5
B,1.5D,795
Module-Climate-controlled seat
RH CUSH TED +
RH CUSH TED -
RH CUSH SEN SIG
RH CUSH SEN RTN
RH CUSH BLOW SPEED
RH SEAT BLOW +
RH SEAT BLOW -
MS CAN HI
MS CAN LO
RH BACK BLOW SPEED
BATT 1
RH BACK SEN SIG
RH BACK SEN RTN
BATT 2
RH BACK TED +
RH BACK TED -
IGN
LH CUSH TED +
LH CUSH TED -
LH CUSH SEN SIG
LH CUSH SEN RTN
LH CUSH BLOW SPEED
LH SEAT BLOWER +
LH SEAT BLOWER -
LH BACK BLOW SPEED
LH BACK SEN SIG
LH BACK SEN RTN
LH BACK TED +
LH BACK TED -
GND
GND
C3140-A UY,2.5D,1045 C0255-3 C0752-3 WR,2.5D,250 C3138-1
C3140-B UG,2.5D,1045 C0255-4 C0752-4 N,2.5D,250 C3138-3
C3141-2 UB,0.5D,1100 C3041-1 C2947-1 GW,0.35D,320 C3138-5
C3141-3 UN,0.5D,1100 C3041-2 C2947-2 Y,0.35D,320 C3138-8
C3142-3 NR,0.5D,1080 C3041-3 C2947-3 GR,0.35D,320 C3138-7
C3142-8 NU,0.75D,1010 C0255-11 C0752-11 GO,1.0D,300 S701 GO,0.75D,450 C3138-2
C3142-7 NW,0.75D,1010 C0255-10 C0752-10 WG,1.0D,270 S700 WG,0.75D,420 C3138-4
Heater-Seat-cushion-Right
5.50 Amps
NTC
M
1.50 Amps
C3142-1 YU,0.5D,275 SJ185
C3142-2 YW,0.5D,250 SJ186
GO,0.75D,575 C3139-2
WG,0.75D,605 C3139-4
Heater-Seat-backrest-Right
M
1.50 Amps
C3142-4 NG,0.5D,1080 C3041-4 C2947-4 OG,0.35D,945 C3139-7
C3141-4 NY,0.5D,1100 C3041-5 C2947-5 OY,0.35D,945 C3139-5
C3141-5 NB,0.5D,1100 C3041-6 C2947-6 O,0.35D,945 C3139-8
NTC
C3140-C GN,2.5D,1045 C0255-5 C0752-5 WR,2.5D,875 C3139-1
C3140-D G,2.5D,1045 C0255-6 C0752-6 N,2.5D,875 C3139-3
5.50 Amps
C3140-G RB,2.5D,2195 C0253-3 C0751-3 WR,2.5D,280 C3136-1
C3140-H RN,2.5D,2195 C0253-4 C0751-4 N,2.5D,280 C3136-3
Heater-Seat-cushion-Left
5.50 Amps
C3141-7 RU,0.5D,2245 C3040-1 C2946-1 GW,0.35D,230 C3136-5
C3141-8 RG,0.5D,2245 C3040-2 C2946-2 Y,0.35D,230 C3136-8
NTC
C3142-11 RY,0.5D,2225 C3040-3 C2946-3 GR,0.35D,230 C3136-7
M
1.50 Amps
C3142-16 RO,0.75D,2160 C0253-11 C0751-11 GO,1.0D,310 S721 GO,0.75D,470 C3136-2
C3142-15 RW,0.75D,2160 C0253-10 C0751-10 WG,1.0D,340 S720 WG,0.75D,500 C3136-4
GO,0.75D,705 C3137-2
WG,0.75D,675 C3137-4
Heater-Seat-backrest-Left
C3142-12 R,0.5D,2225 C3040-4 C2946-4 OG,0.35D,1085 C3137-7
M
1.50 Amps
C3141-9 U,0.5D,2245 C3040-5 C2946-5 OY,0.35D,1085 C3137-5
C3141-10 UR,0.5D,2245 C3040-6 C2946-6 O,0.35D,1085 C3137-8
NTC
C3140-J US,2.5D,2195 C0253-5 C0751-5 WR,2.5D,1015 C3137-1
C3140-K UW,2.5D,2195 C0253-6 C0751-6 N,2.5D,1015 C3137-3
5.50 Amps
C3140-M B,2.5D,310 SJ273 B,4.0D,715 C1970-1
C3140-L B,2.5D,310
C2563-1

BH42-70346-C-A-01-01-Service (L322-11MY-JOB1)

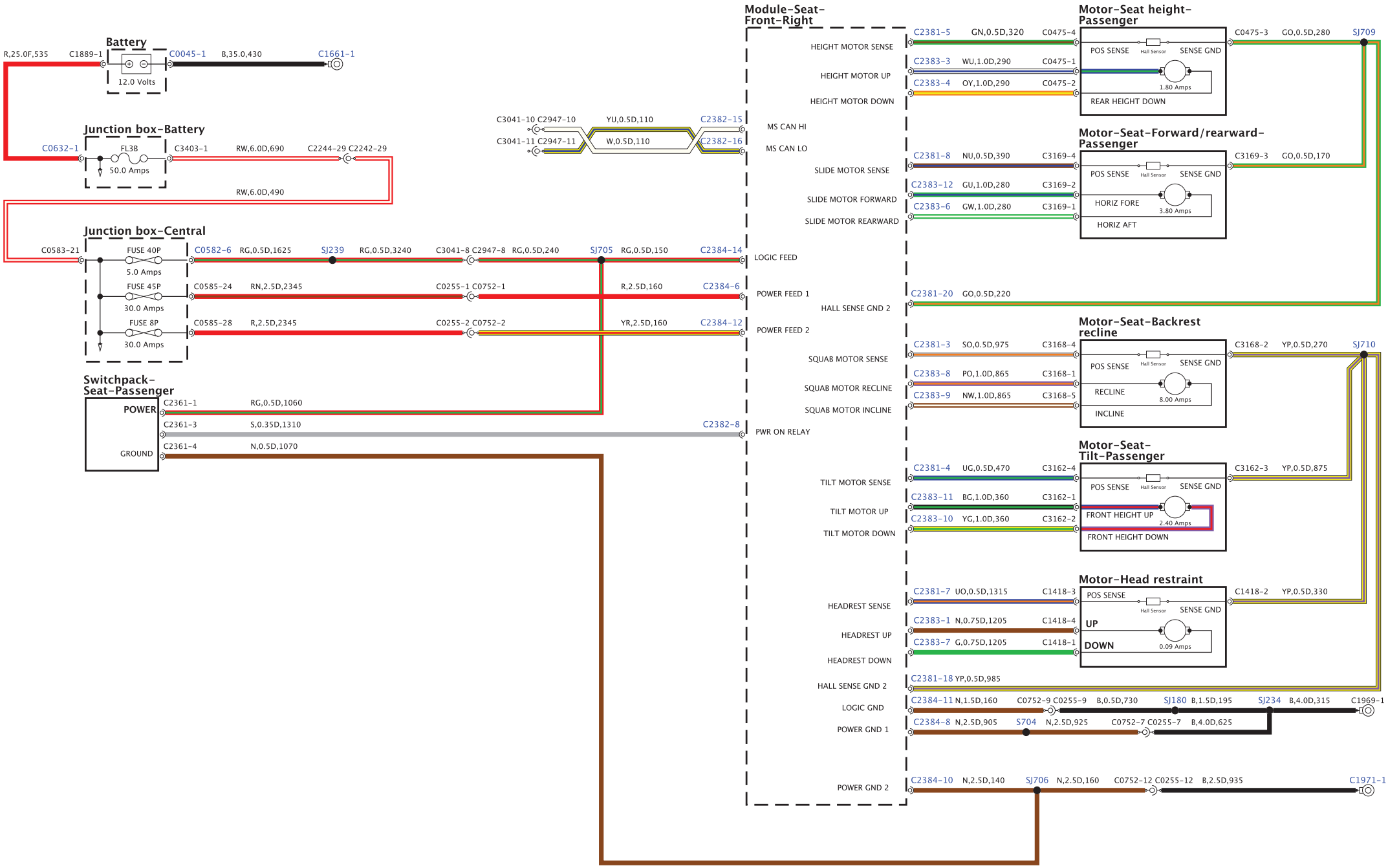

BH42-70343-A-A-01-01-Service (L322-13MY-JOB3)

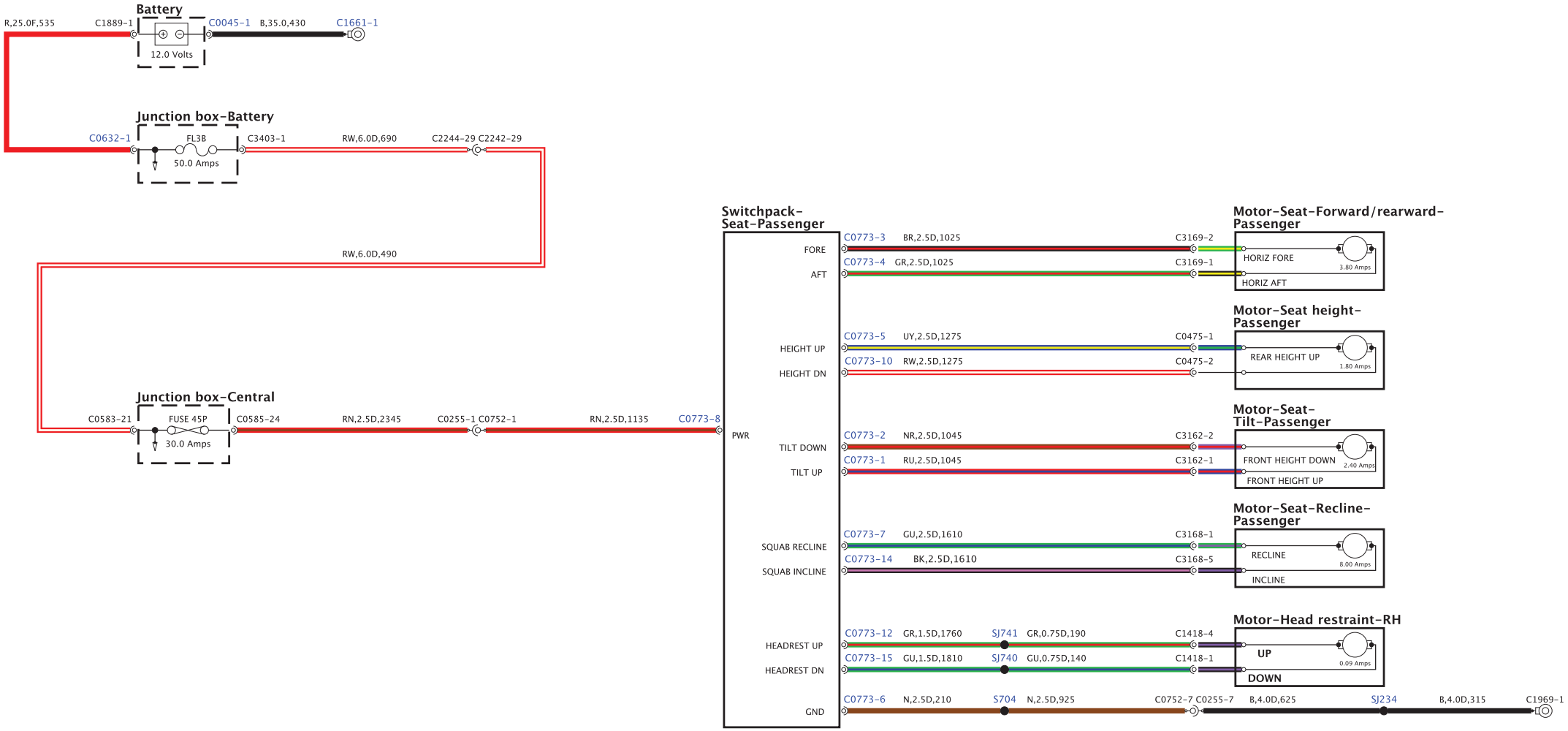

BH42-70349-A-A-01-02-Service (L322-11MY-JOB1)

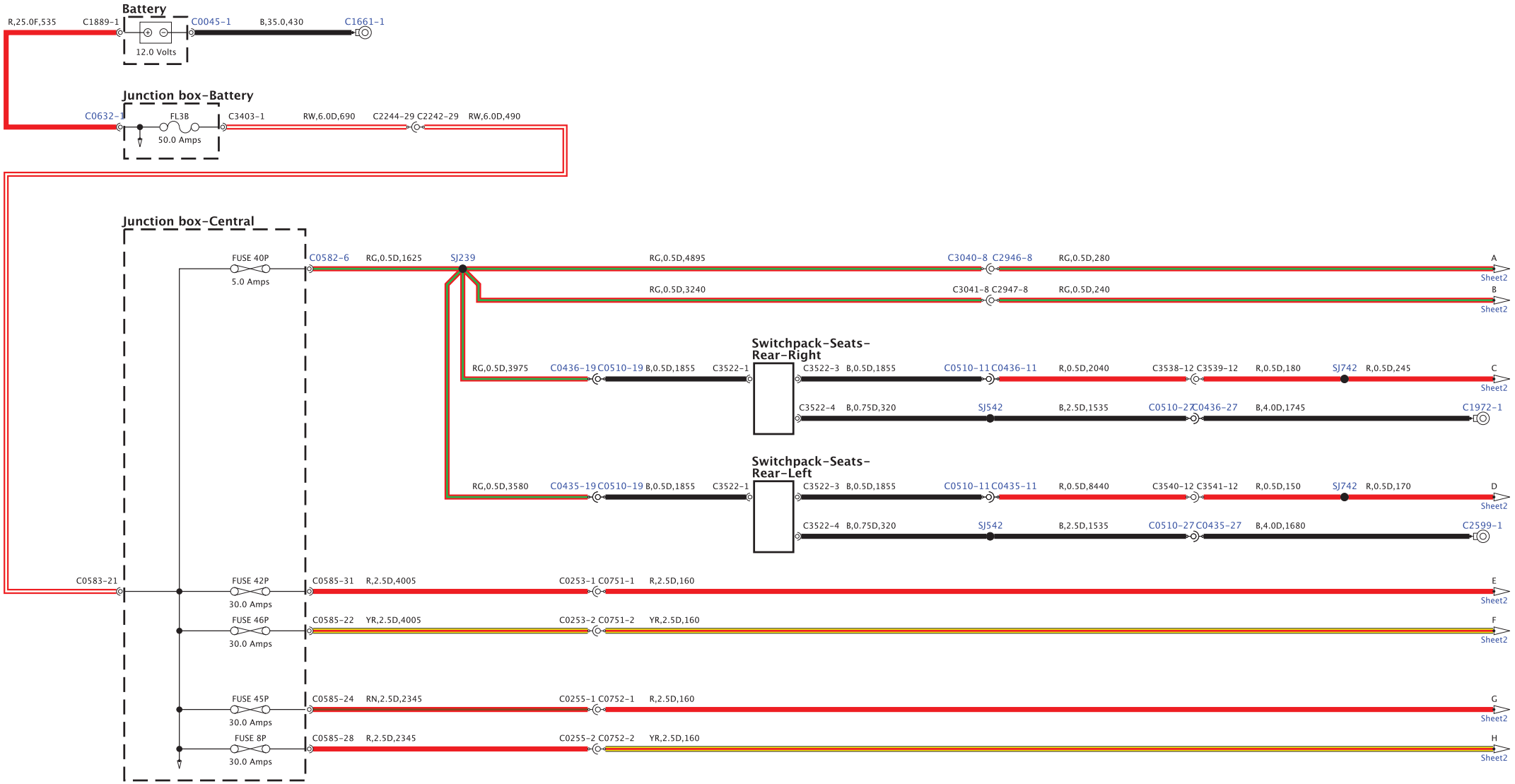

BH42-70349-A-A-02-02-Service (L322-11MY-JOB1)

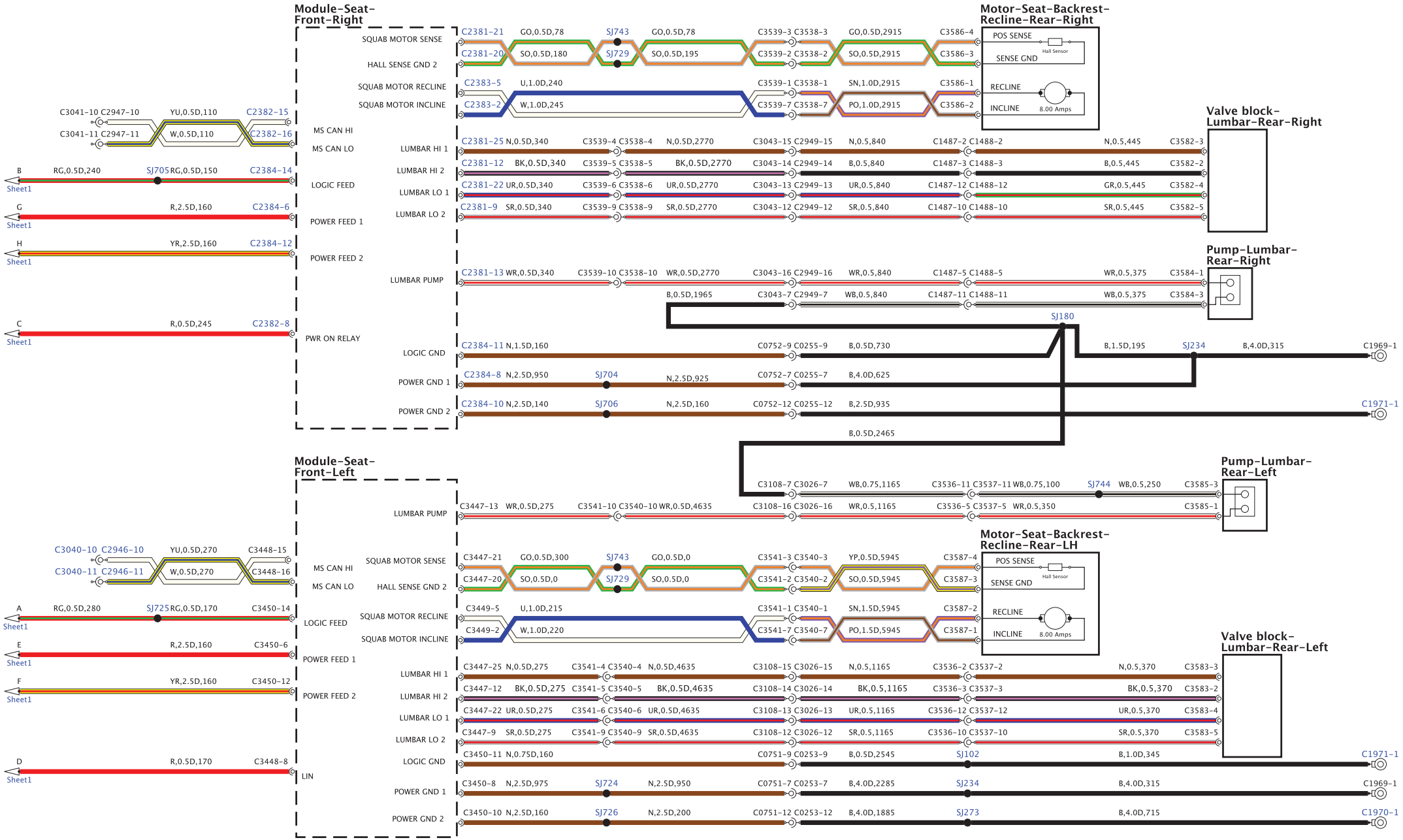

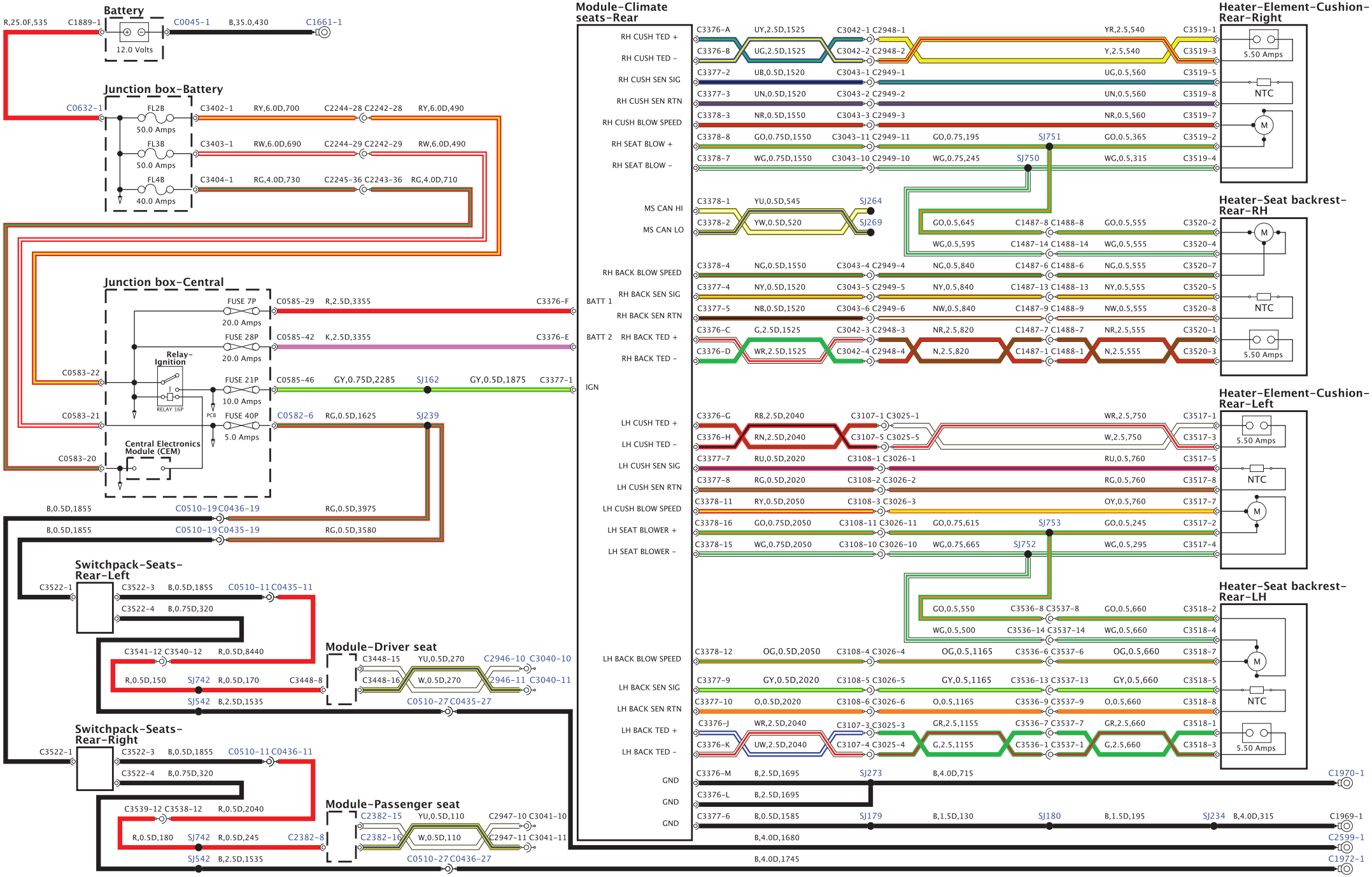
Battery
12.0 Volts
Junction box-Battery
50.0 Amps
50.0 Amps
40.0 Amps
Junction box-Central
Relay-Ignition
RELAY 16P
PCB
Central Electronics Module (CEM)
FUSE 7P
20.0 Amps
FUSE 28P
20.0 Amps
FUSE 21P
10.0 Amps
FUSE 40P
5.0 Amps
Switchpack-Seats-Rear-Left
Switchpack-Seats-Rear-Right
Module-Driver seat
Module-Passenger seat
Module-Climate seats-Rear
RH CUSH TED +
RH CUSH TED -
RH CUSH SEN SIG
RH CUSH SEN RTN
RH CUSH BLOW SPEED
RH SEAT BLOW +
RH SEAT BLOW -
MS CAN HI
MS CAN LO
RH BACK BLOW SPEED
RH BACK SEN SIG
RH BACK SEN RTN
RH BACK TED +
RH BACK TED -
LH CUSH TED +
LH CUSH TED -
LH CUSH SEN SIG
LH CUSH SEN RTN
LH CUSH BLOW SPEED
LH SEAT BLOWER +
LH SEAT BLOWER -
LH BACK BLOW SPEED
LH BACK SEN SIG
LH BACK SEN RTN
LH BACK TED +
LH BACK TED -
GND
GND
GND
BATT 1
BATT 2
IGN
Heater-Element-Cushion-Rear-Right
Heater-Seat backrest-Rear-RH
Heater-Element-Cushion-Rear-Left
Heater-Seat backrest-Rear-LH
5.50 Amps
NTC
M

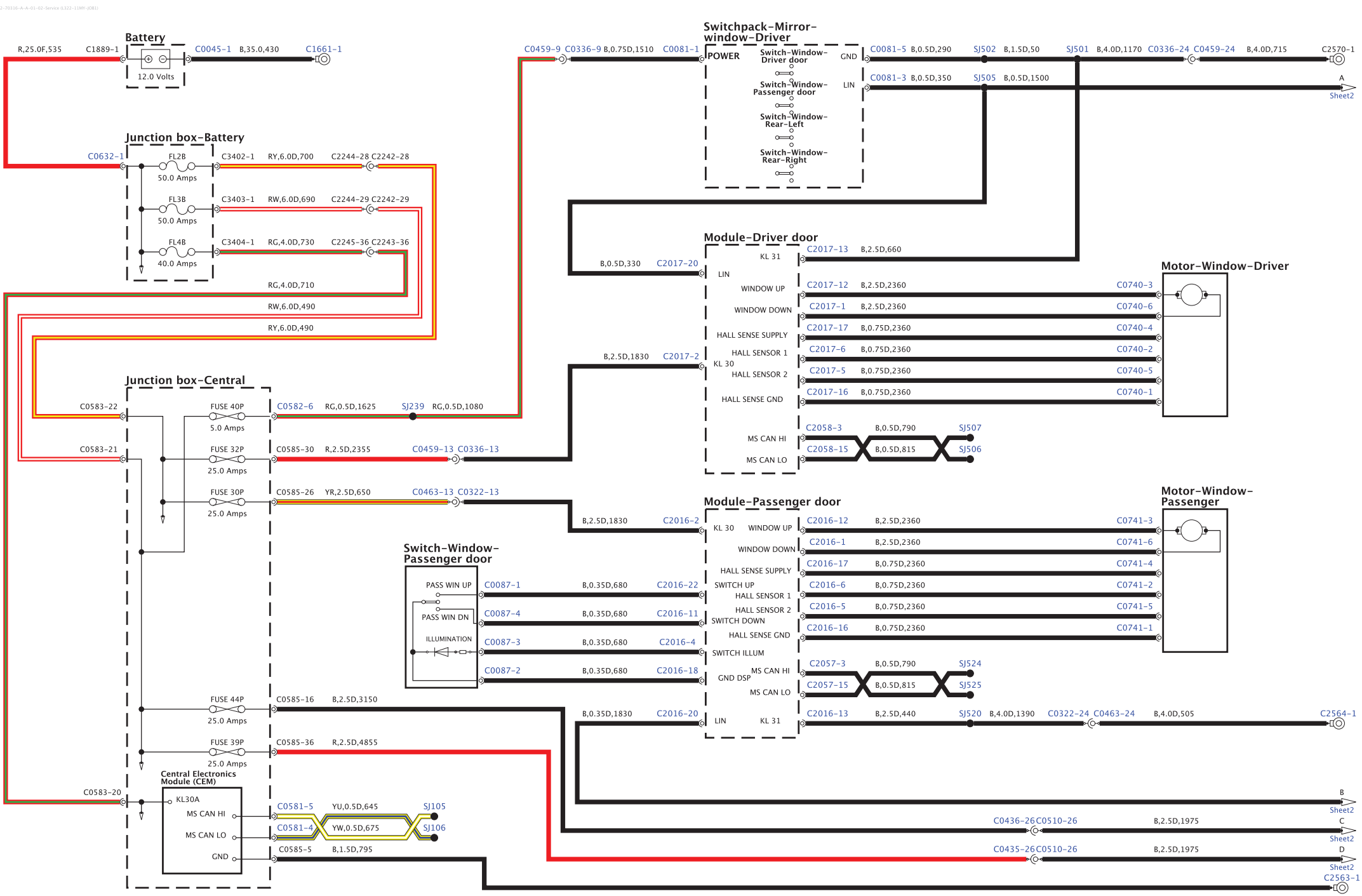
Battery
R,25.0F,535
C1889-1
C0045-1 B,35.0,430
C1661-1
12.0 Volts
Junction box-Battery
C0632-1
FL2B
50.0 Amps
C3402-1 RY,6.0D,700 C2244-28 C2242-28
FL3B
50.0 Amps
C3403-1 RW,6.0D,690 C2244-29 C2242-29
FL4B
40.0 Amps
C3404-1 RG,4.0D,730 C2245-36 C2243-36
RG,4.0D,710
RW,6.0D,490
RY,6.0D,490
Junction box-Central
C0583-22
FUSE 40P
5.0 Amps
C0582-6 RG,0.5D,1625 SJ239 RG,0.5D,1080
C0583-21
FUSE 32P
25.0 Amps
C0585-30 R,2.5D,2355 C0459-13 C0336-13
FUSE 30P
25.0 Amps
C0585-26 YR,2.5D,650 C0463-13 C0322-13
FUSE 44P
25.0 Amps
C0585-16 B,2.5D,3150
FUSE 39P
25.0 Amps
C0585-36 R,2.5D,4855
C0583-20
Central Electronics Module (CEM)
KL30A
MS CAN HI
MS CAN LO
GND
C0581-5 YU,0.5D,645 SJ105
C0581-4 YW,0.5D,675 SJ106
C0585-5 B,1.5D,795
Switchpack-Mirror-window-Driver
C0459-9 C0336-9 B,0.75D,1510 C0081-1
POWER
Switch-Window-Driver door
Switch-Window-Passenger door
Switch-Window-Rear-Left
Switch-Window-Rear-Right
GND
LIN
C0081-5 B,0.5D,290 SJ502 B,1.5D,50 SJ501 B,4.0D,1170 C0336-24 C0459-24 B,4.0D,715 C2570-1
C0081-3 B,0.5D,350 SJ505 B,0.5D,1500
A
Sheet2
Module-Driver door
B,0.5D,330 C2017-20
KL 31
C2017-13 B,2.5D,660
LIN
WINDOW UP
C2017-12 B,2.5D,2360 C0740-3
WINDOW DOWN
C2017-1 B,2.5D,2360 C0740-6
HALL SENSE SUPPLY
C2017-17 B,0.75D,2360 C0740-4
HALL SENSOR 1
C2017-6 B,0.75D,2360 C0740-2
B,2.5D,1830 C2017-2
KL 30
HALL SENSOR 2
C2017-5 B,0.75D,2360 C0740-5
HALL SENSE GND
C2017-16 B,0.75D,2360 C0740-1
MS CAN HI
C2058-3 B,0.5D,790 SJ507
MS CAN LO
C2058-15 B,0.5D,815 SJ506
Motor-Window-Driver
Switch-Window-Passenger door
PASS WIN UP
C0087-1 B,0.35D,680 C2016-22
PASS WIN DN
C0087-4 B,0.35D,680 C2016-11
ILLUMINATION
C0087-3 B,0.35D,680 C2016-4
C0087-2 B,0.35D,680 C2016-18
Module-Passenger door
B,2.5D,1830 C2016-2
KL 30
WINDOW UP
C2016-12 B,2.5D,2360 C0741-3
WINDOW DOWN
C2016-1 B,2.5D,2360 C0741-6
HALL SENSE SUPPLY
C2016-17 B,0.75D,2360 C0741-4
SWITCH UP
C2016-6 B,0.75D,2360 C0741-2
HALL SENSOR 1
HALL SENSOR 2
C2016-5 B,0.75D,2360 C0741-5
SWITCH DOWN
HALL SENSE GND
C2016-16 B,0.75D,2360 C0741-1
SWITCH ILLUM
GND DSP
MS CAN HI
C2057-3 B,0.5D,790 SJ524
MS CAN LO
C2057-15 B,0.5D,815 SJ525
Motor-Window-Passenger
B,0.35D,1830 C2016-20
LIN
KL 31
C2016-13 B,2.5D,440 SJ520 B,4.0D,1390 C0322-24 C0463-24 B,4.0D,505 C2564-1
B
Sheet2
C0436-26 C0510-26 B,2.5D,1975
C
Sheet2
C0435-26 C0510-26 B,2.5D,1975
D
Sheet2
C2563-1

BH42-70316-A-A-02-02-Service (L322-13MY-JOE)

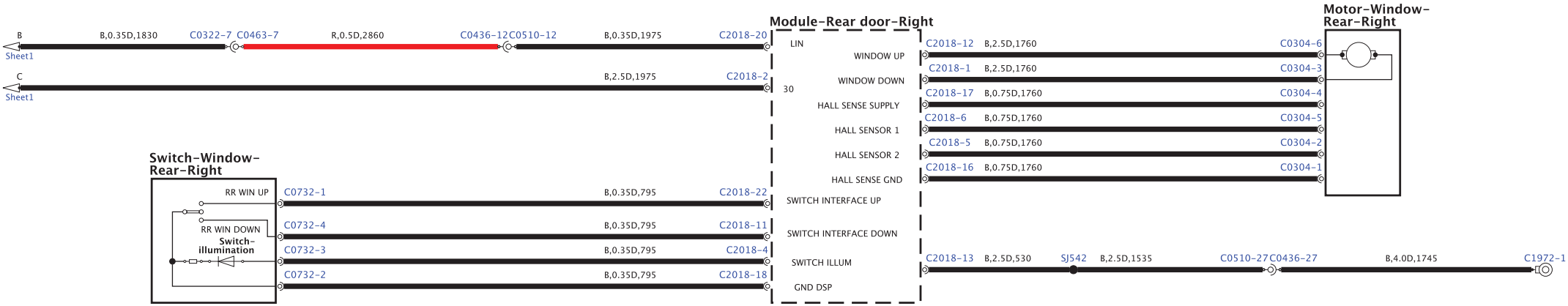

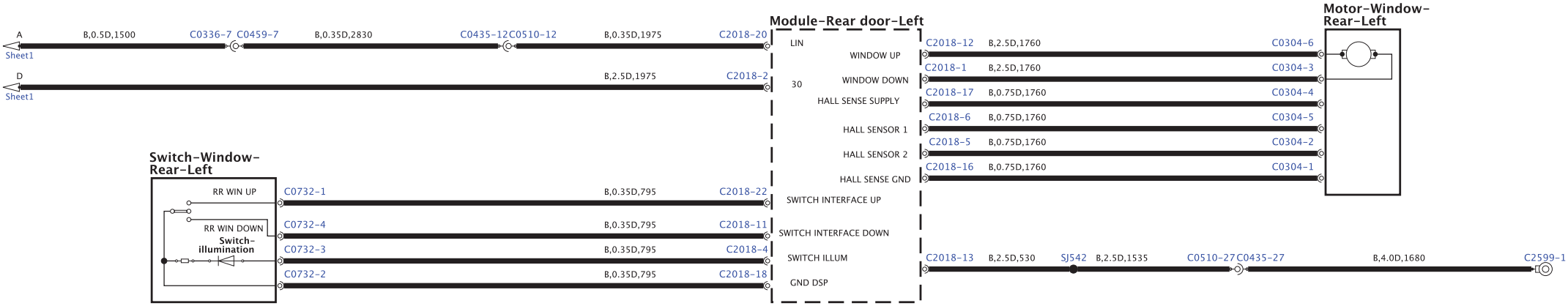

BH42-70366-A-A-01-01-Service (L322-13MY-JOB3)

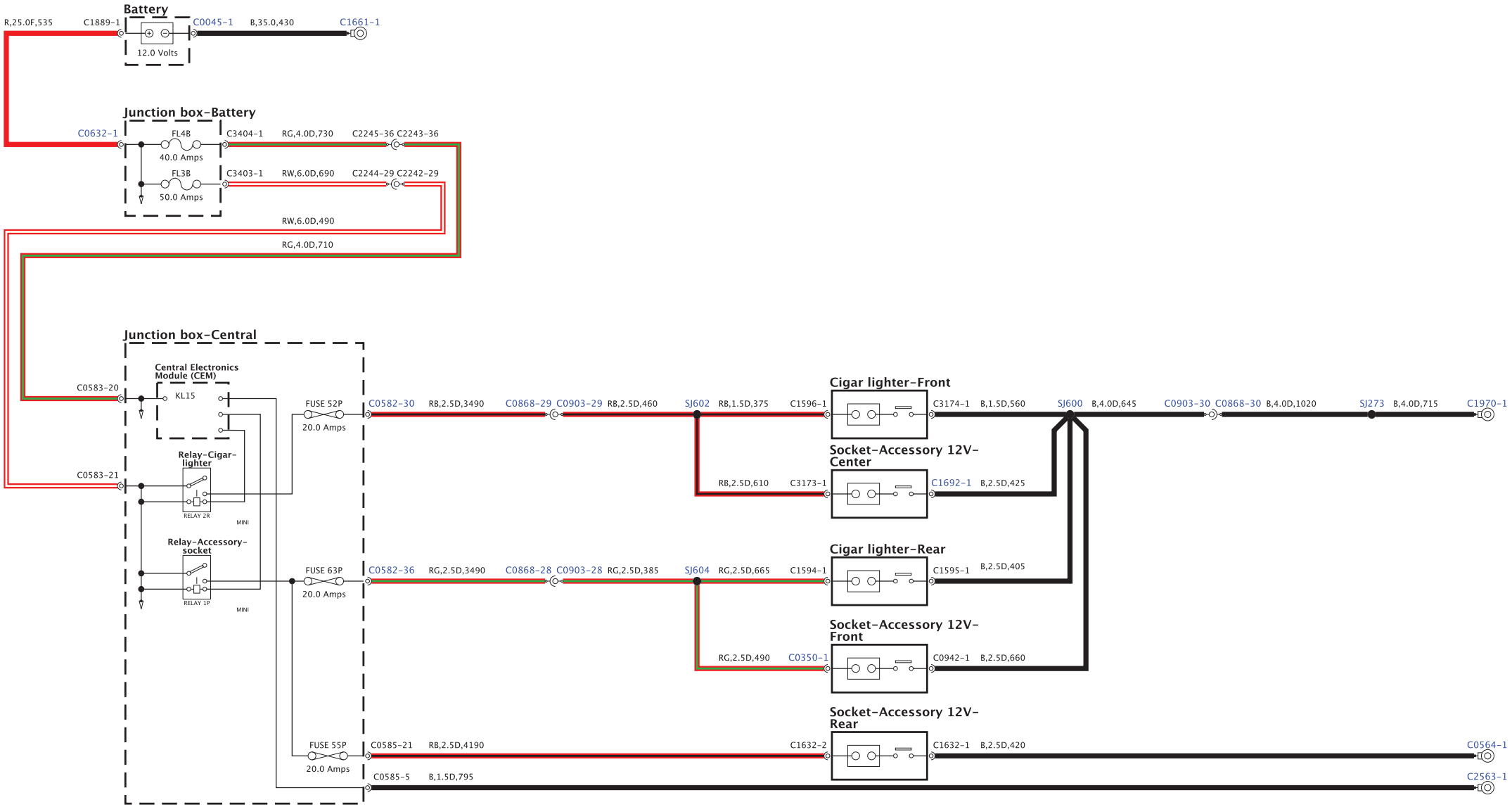

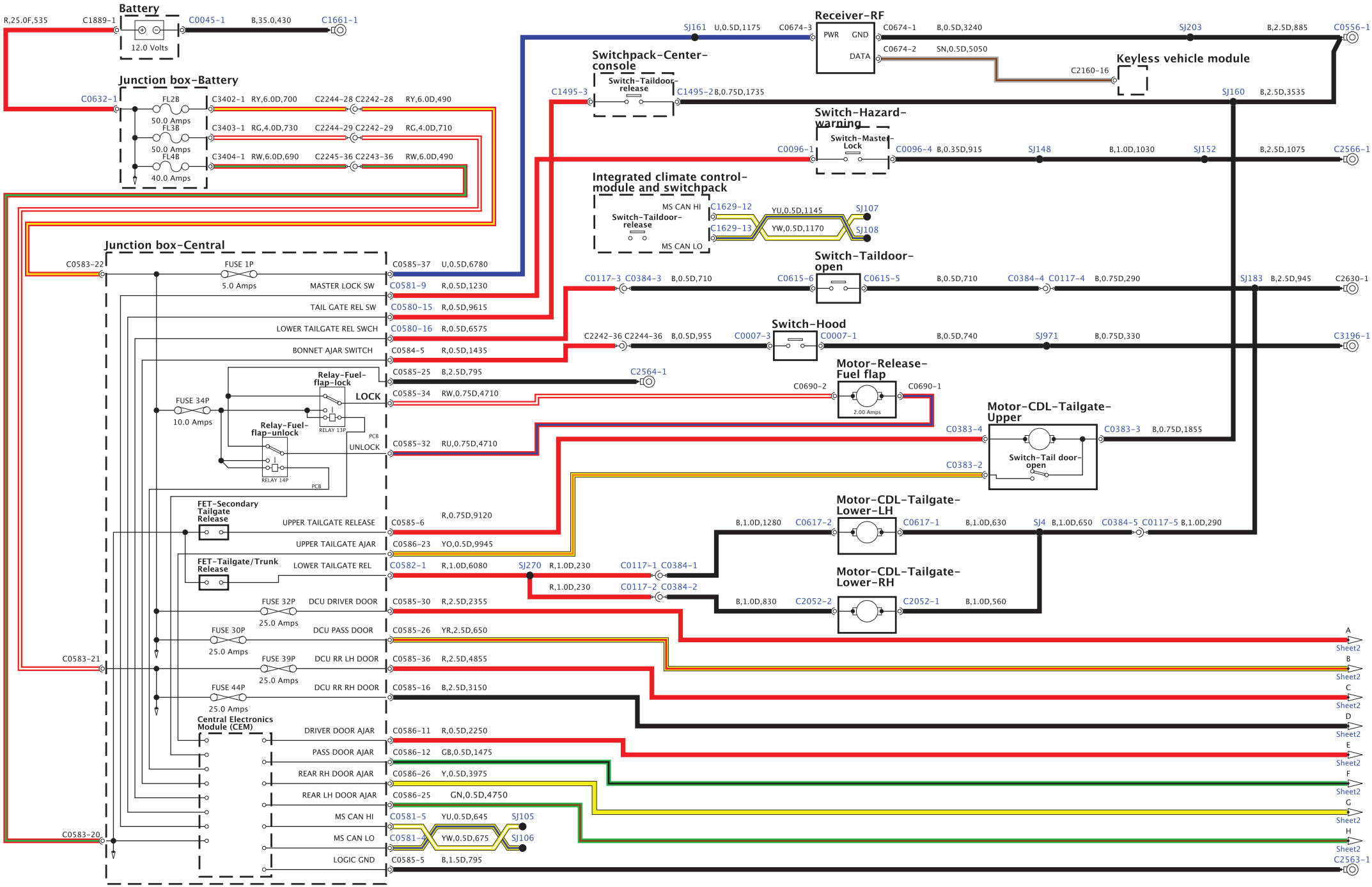
Battery
12.0 Volts
Junction box-Battery
Junction box-Central
Receiver-RF
Keyless vehicle module
Switchpack-Center-console
Switch-Taildoor-release
Switch-Hazard-warning
Switch-Master-Lock
Integrated climate control-module and switchpack
Switch-Taildoor-open
Switch-Hood
Motor-Release-Fuel flap
Motor-CDL-Tailgate-Upper
Switch-Tail door-open
Motor-CDL-Tailgate-Lower-LH
Motor-CDL-Tailgate-Lower-RH
Relay-Fuel-flap-lock
Relay-Fuel-flap-unlock
FET-Secondary Tailgate Release
FET-Tailgate/Trunk Release
Central Electronics Module (CEM)
MASTER LOCK SW
TAIL GATE REL SW
LOWER TAILGATE REL SWCH
BONNET AJAR SWITCH
LOCK
UNLOCK
UPPER TAILGATE RELEASE
UPPER TAILGATE AJAR
LOWER TAILGATE REL
DCU DRIVER DOOR
DCU PASS DOOR
DCU RR LH DOOR
DCU RR RH DOOR
DRIVER DOOR AJAR
PASS DOOR AJAR
REAR RH DOOR AJAR
REAR LH DOOR AJAR
MS CAN HI
MS CAN LO
LOGIC GND

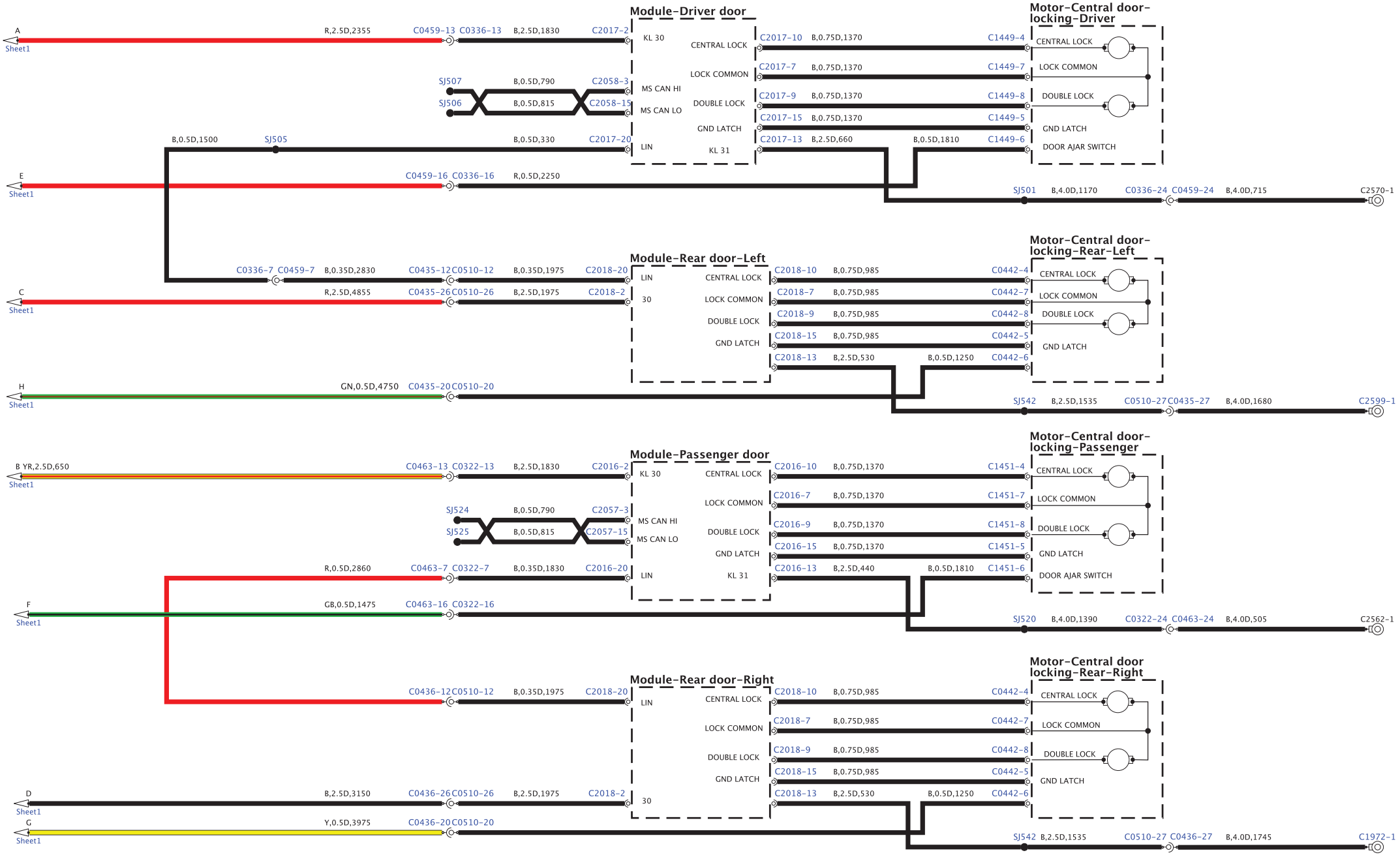
Module-Driver door
Motor-Central door-locking-Driver
A
Sheet1
R,2.5D,2355
C0459-13 C0336-13
B,2.5D,1830
C2017-2
KL 30
CENTRAL LOCK
C2017-10 B,0.75D,1370 C1449-4
LOCK COMMON
C2017-7 B,0.75D,1370 C1449-7
DOUBLE LOCK
C2017-9 B,0.75D,1370 C1449-8
GND LATCH
C2017-15 B,0.75D,1370 C1449-5
KL 31
C2017-13 B,2.5D,660
B,0.5D,1810 C1449-6
CENTRAL LOCK
LOCK COMMON
DOUBLE LOCK
GND LATCH
DOOR AJAR SWITCH
SJ507
B,0.5D,790
C2058-3
MS CAN HI
SJ506
B,0.5D,815
C2058-15
MS CAN LO
B,0.5D,1500
SJ505
B,0.5D,330
C2017-20
LIN
E
Sheet1
C0459-16 C0336-16
R,0.5D,2250
SJ501 B,4.0D,1170 C0336-24 C0459-24 B,4.0D,715 C2570-1
Module-Rear door-Left
Motor-Central door-locking-Rear-Left
C0336-7 C0459-7
B,0.35D,2830
C0435-12 C0510-12
B,0.35D,1975
C2018-20
LIN
C
Sheet1
R,2.5D,4855
C0435-26 C0510-26
B,2.5D,1975
C2018-2
30
CENTRAL LOCK
C2018-10 B,0.75D,985 C0442-4
LOCK COMMON
C2018-7 B,0.75D,985 C0442-7
DOUBLE LOCK
C2018-9 B,0.75D,985 C0442-8
GND LATCH
C2018-15 B,0.75D,985 C0442-5
C2018-13 B,2.5D,530
B,0.5D,1250 C0442-6
CENTRAL LOCK
LOCK COMMON
DOUBLE LOCK
GND LATCH
H
Sheet1
GN,0.5D,4750
C0435-20 C0510-20
SJ542 B,2.5D,1535 C0510-27 C0435-27 B,4.0D,1680 C2599-1
Module-Passenger door
Motor-Central door-locking-Passenger
B YR,2.5D,650
Sheet1
C0463-13 C0322-13
B,2.5D,1830
C2016-2
KL 30
CENTRAL LOCK
C2016-10 B,0.75D,1370 C1451-4
LOCK COMMON
C2016-7 B,0.75D,1370 C1451-7
DOUBLE LOCK
C2016-9 B,0.75D,1370 C1451-8
GND LATCH
C2016-15 B,0.75D,1370 C1451-5
KL 31
C2016-13 B,2.5D,440
B,0.5D,1810 C1451-6
CENTRAL LOCK
LOCK COMMON
DOUBLE LOCK
GND LATCH
DOOR AJAR SWITCH
SJ524
B,0.5D,790
C2057-3
MS CAN HI
SJ525
B,0.5D,815
C2057-15
MS CAN LO
R,0.5D,2860
C0463-7 C0322-7
B,0.35D,1830
C2016-20
LIN
F
Sheet1
GB,0.5D,1475
C0463-16 C0322-16
SJ520 B,4.0D,1390 C0322-24 C0463-24 B,4.0D,505 C2562-1
Module-Rear door-Right
Motor-Central door locking-Rear-Right
C0436-12 C0510-12
B,0.35D,1975
C2018-20
LIN
CENTRAL LOCK
C2018-10 B,0.75D,985 C0442-4
LOCK COMMON
C2018-7 B,0.75D,985 C0442-7
DOUBLE LOCK
C2018-9 B,0.75D,985 C0442-8
GND LATCH
C2018-15 B,0.75D,985 C0442-5
C2018-13 B,2.5D,530
B,0.5D,1250 C0442-6
CENTRAL LOCK
LOCK COMMON
DOUBLE LOCK
GND LATCH
D
Sheet1
B,2.5D,3150
C0436-26 C0510-26
B,2.5D,1975
C2018-2
30
G
Sheet1
Y,0.5D,3975
C0436-20 C0510-20
SJ542 B,2.5D,1535 C0510-27 C0436-27 B,4.0D,1745 C1972-1

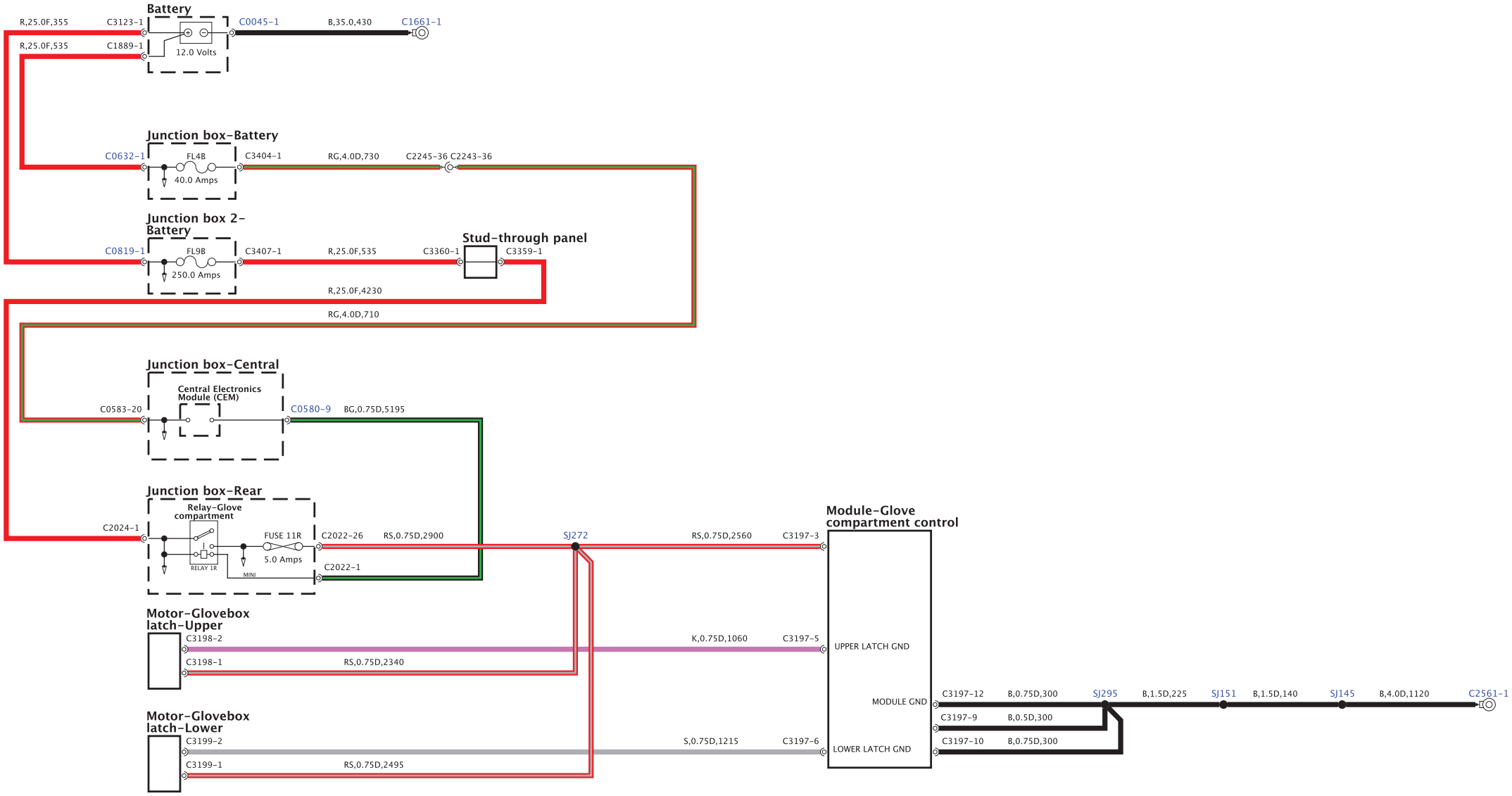
Battery
R,25.0F,355
C3123-1
C0045-1
B,35.0,430
C1661-1
12.0 Volts
R,25.0F,535
C1889-1
Junction box-Battery
C0632-1
FL4B
C3404-1
RG,4.0D,730
C2245-36 C2243-36
40.0 Amps
Junction box 2-Battery
Stud-through panel
C0819-1
FL9B
C3407-1
R,25.0F,535
C3360-1
C3359-1
250.0 Amps
R,25.0F,4230
RG,4.0D,710
Junction box-Central
Central Electronics Module (CEM)
C0583-20
C0580-9
BG,0.75D,5195
Junction box-Rear
Relay-Glove compartment
C2024-1
FUSE 11R
C2022-26
RS,0.75D,2900
SJ272
RS,0.75D,2560
C3197-3
5.0 Amps
RELAY 1R
MINI
C2022-1
Module-Glove compartment control
Motor-Glovebox latch-Upper
C3198-2
K,0.75D,1060
C3197-5
UPPER LATCH GND
C3198-1
RS,0.75D,2340
MODULE GND
C3197-12
B,0.75D,300
SJ295
B,1.5D,225
SJ151
B,1.5D,140
SJ145
B,4.0D,1120
C2561-1
C3197-9
B,0.5D,300
Motor-Glovebox latch-Lower
C3199-2
S,0.75D,1215
C3197-6
LOWER LATCH GND
C3197-10
B,0.75D,300
C3199-1
RS,0.75D,2495

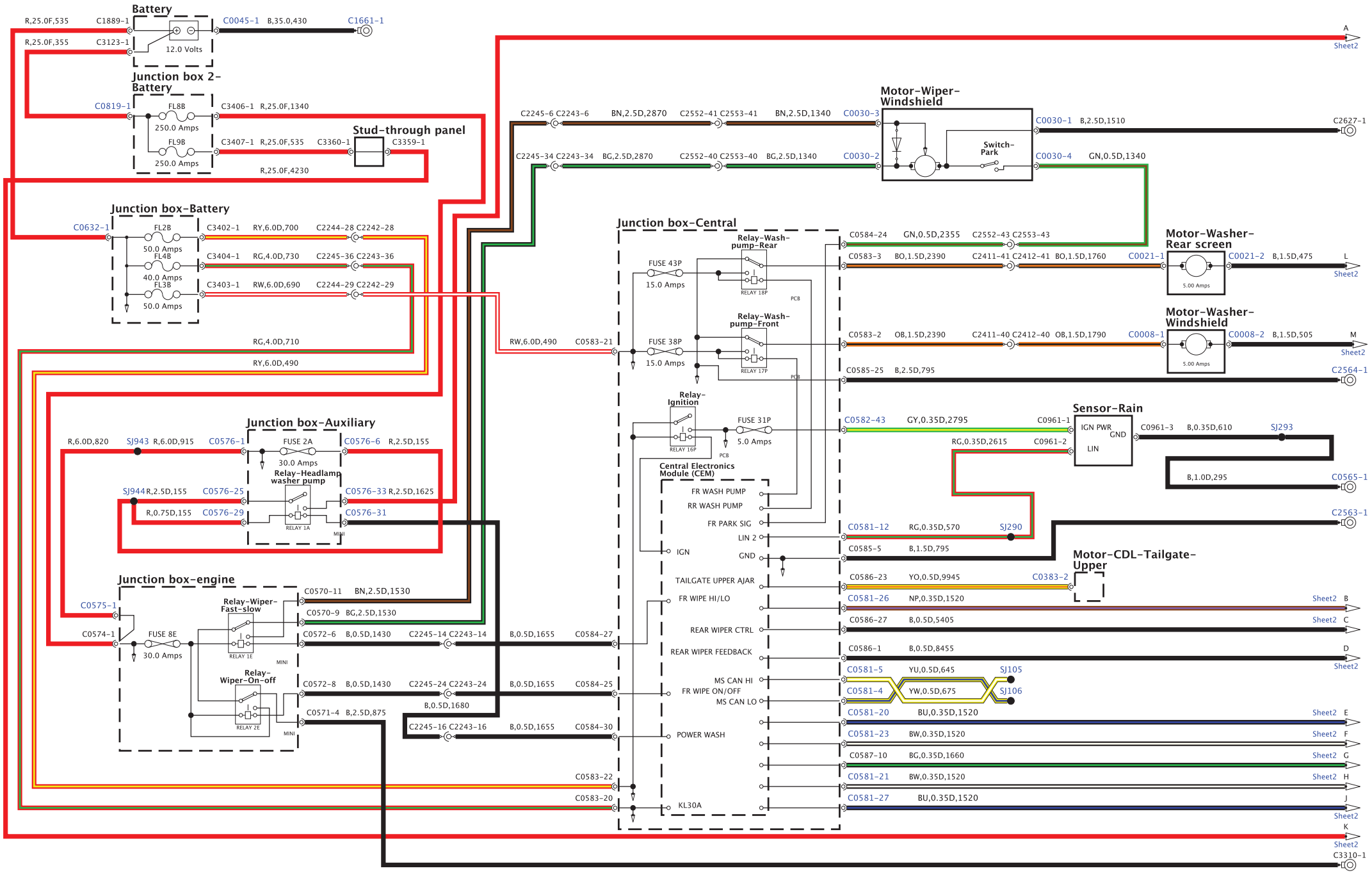
Battery
12.0 Volts
Junction box 2-Battery
Stud-through panel
Junction box-Battery
Junction box-Auxiliary
Junction box-engine
Junction box-Central
Relay-Wash-pump-Rear
Relay-Wash-pump-Front
Relay-Ignition
Relay-Headlamp washer pump
Relay-Wiper-Fast-slow
Relay-Wiper-On-off
Central Electronics Module (CEM)
Motor-Wiper-Windshield
Switch-Park
Motor-Washer-Rear screen
Motor-Washer-Windshield
Sensor-Rain
Motor-CDL-Tailgate-Upper
FR WASH PUMP
RR WASH PUMP
FR PARK SIG
LIN 2
IGN
GND
TAILGATE UPPER AJAR
FR WIPE HI/LO
REAR WIPER CTRL
REAR WIPER FEEDBACK
MS CAN HI
FR WIPE ON/OFF
MS CAN LO
POWER WASH
KL30A

BH42-70133-A-A-02-02-Service (L322-11MY-JOB1)

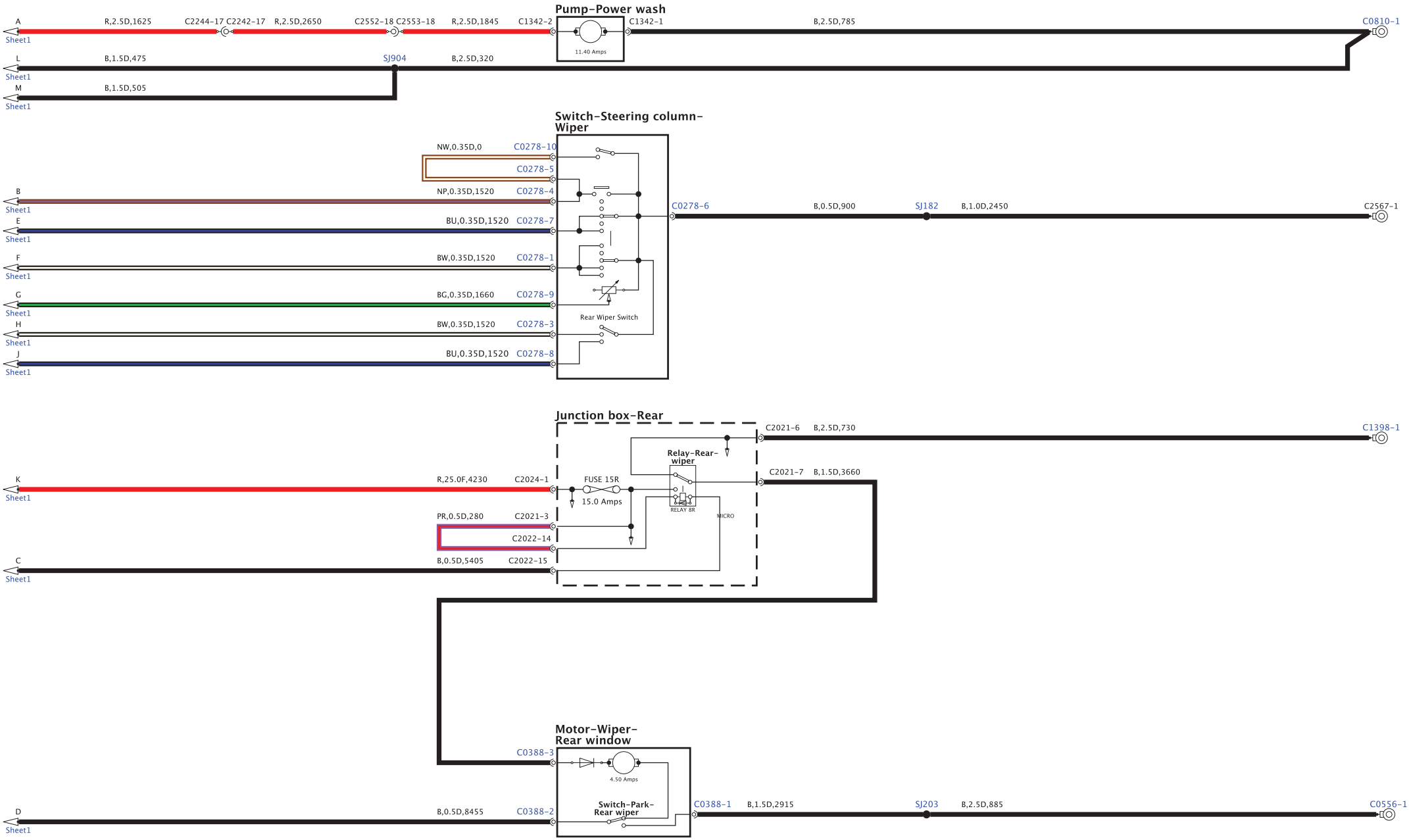

BH42-70317-A-A-01-01-Service (L322-11MY-JOB1)

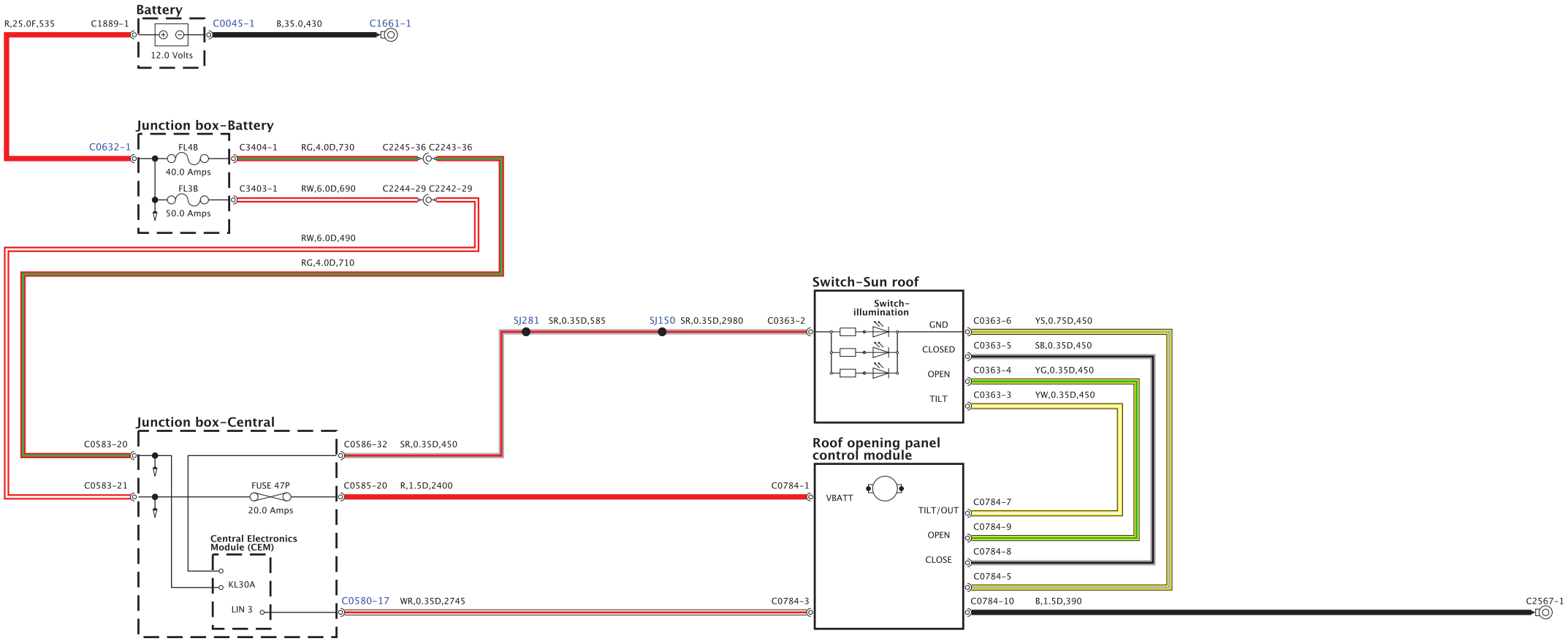

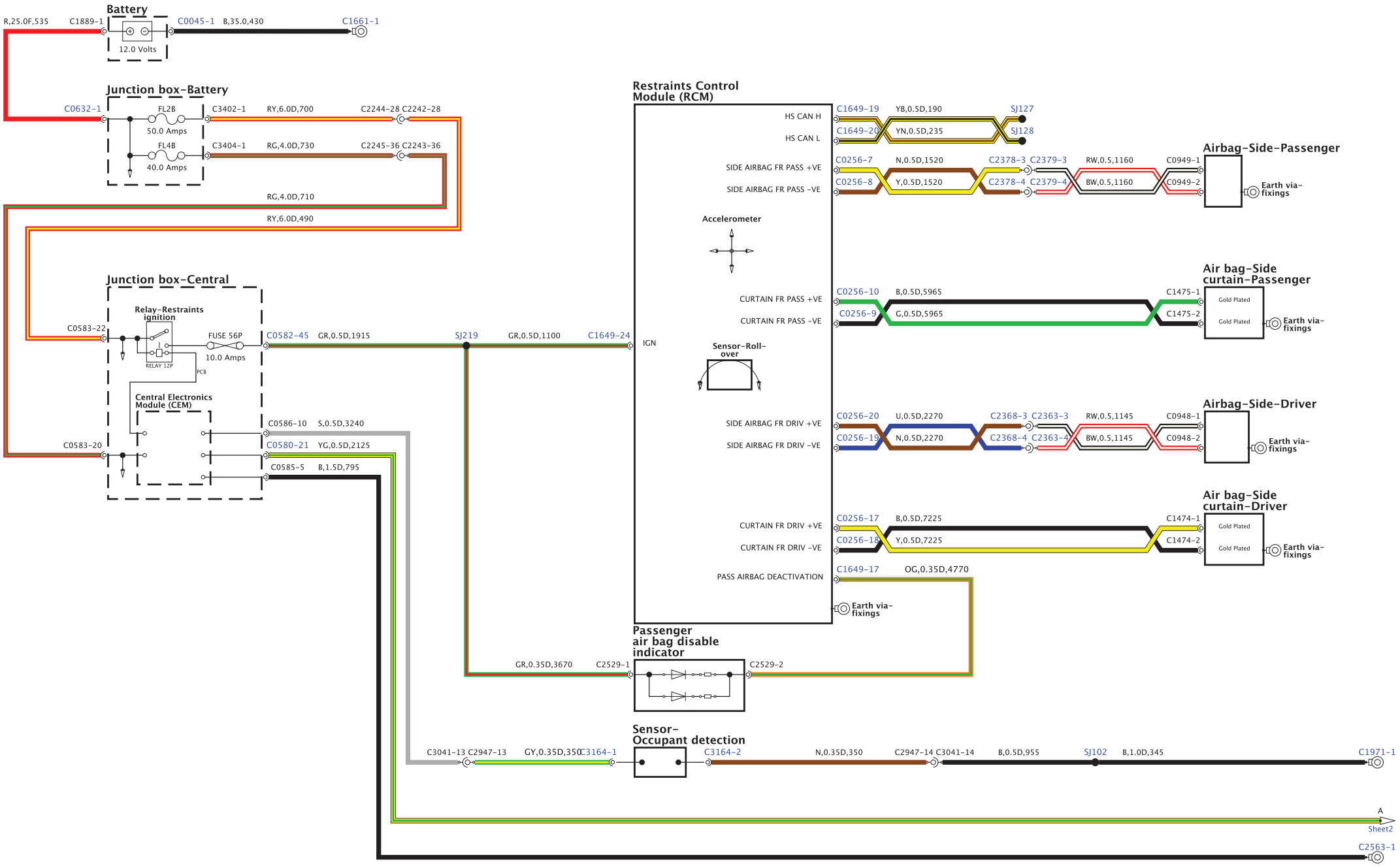
Battery
R,25.0F,535
C1889-1
C0045-1
B,35.0,430
C1661-1
12.0 Volts
Junction box-Battery
C0632-1
FL2B
50.0 Amps
FL4B
40.0 Amps
C3402-1
RY,6.0D,700
C2244-28 C2242-28
C3404-1
RG,4.0D,730
C2245-36 C2243-36
RG,4.0D,710
RY,6.0D,490
Junction box-Central
Relay-Restraints ignition
C0583-22
FUSE 56P
10.0 Amps
RELAY 12P
PCB
C0582-45
GR,0.5D,1915
SJ219
GR,0.5D,1100
C1649-24
Central Electronics Module (CEM)
C0583-20
C0586-10
S,0.5D,3240
C0580-21
YG,0.5D,2125
C0585-5
B,1.5D,795
Restraints Control Module (RCM)
HS CAN H
HS CAN L
C1649-19
YB,0.5D,190
SJ127
C1649-20
YN,0.5D,235
SJ128
SIDE AIRBAG FR PASS +VE
SIDE AIRBAG FR PASS -VE
C0256-7
N,0.5D,1520
C2378-3 C2379-3
RW,0.5,1160
C0949-1
C0256-8
Y,0.5D,1520
C2378-4 C2379-4
BW,0.5,1160
C0949-2
Airbag-Side-Passenger
Earth via-fixings
Accelerometer
CURTAIN FR PASS +VE
CURTAIN FR PASS -VE
C0256-10
B,0.5D,5965
C1475-1
C0256-9
G,0.5D,5965
C1475-2
Gold Plated
Air bag-Side curtain-Passenger
Earth via-fixings
IGN
Sensor-Roll-over
SIDE AIRBAG FR DRIV +VE
SIDE AIRBAG FR DRIV -VE
C0256-20
U,0.5D,2270
C2368-3 C2363-3
RW,0.5,1145
C0948-1
C0256-19
N,0.5D,2270
C2368-4 C2363-4
BW,0.5,1145
C0948-2
Airbag-Side-Driver
Earth via-fixings
CURTAIN FR DRIV +VE
CURTAIN FR DRIV -VE
C0256-17
B,0.5D,7225
C1474-1
C0256-18
Y,0.5D,7225
C1474-2
Air bag-Side curtain-Driver
Earth via-fixings
PASS AIRBAG DEACTIVATION
C1649-17
OG,0.35D,4770
Earth via-fixings
Passenger air bag disable indicator
GR,0.35D,3670
C2529-1
C2529-2
Sensor-Occupant detection
C3041-13 C2947-13
GY,0.35D,350
C3164-1
C3164-2
N,0.35D,350
C2947-14 C3041-14
B,0.5D,955
SJ102
B,1.0D,345
C1971-1
A
Sheet2
C2563-1

BH42-70150-B-A-02-03-Service (L322-11MY-J081)

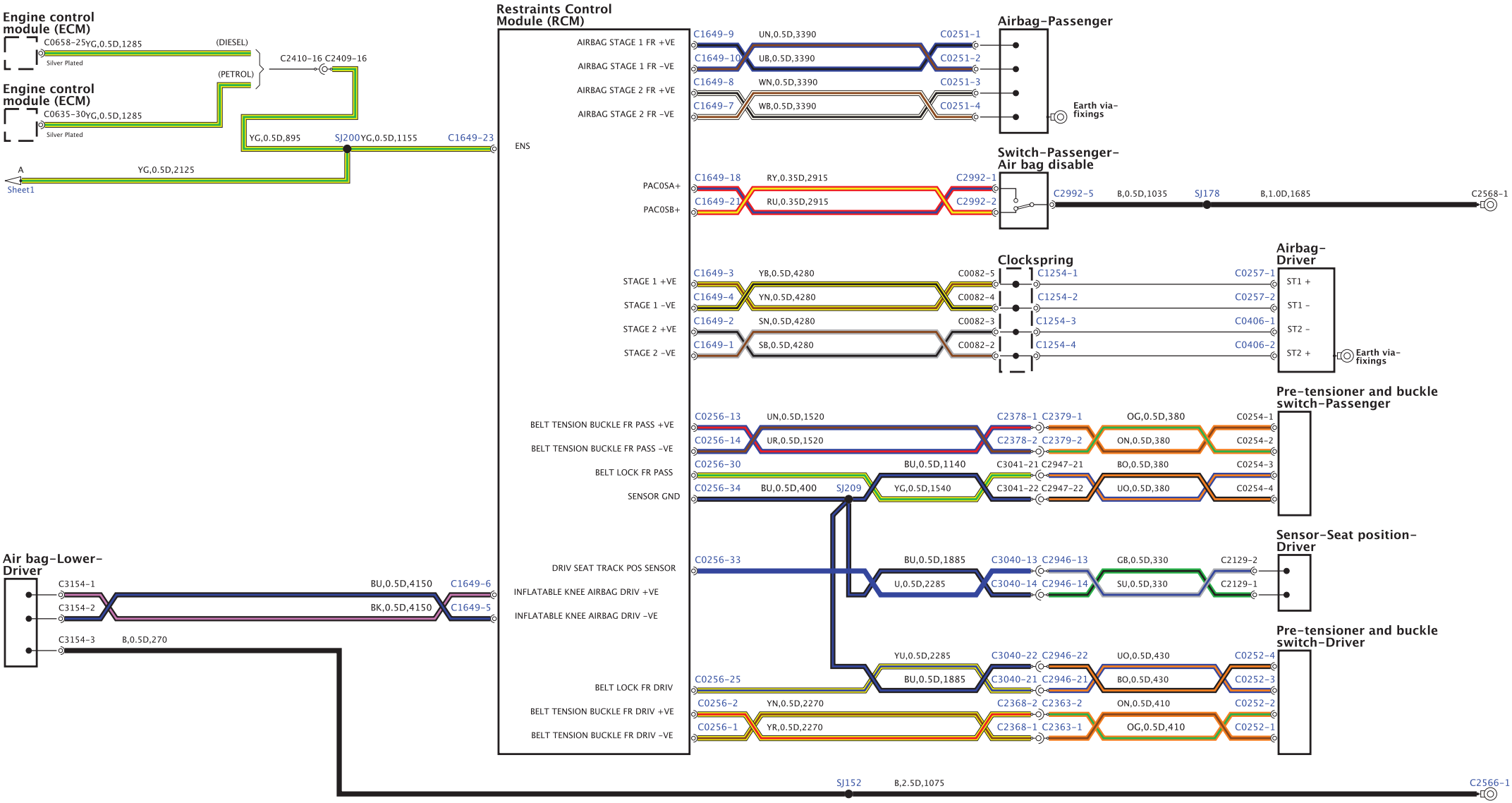

BH42-70150-B-A-03-03-Service (L322-11MY-JO81)

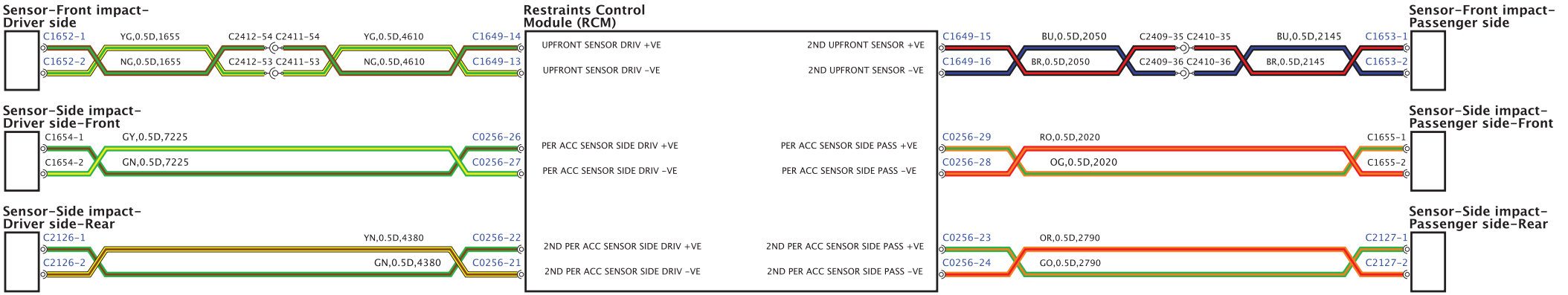

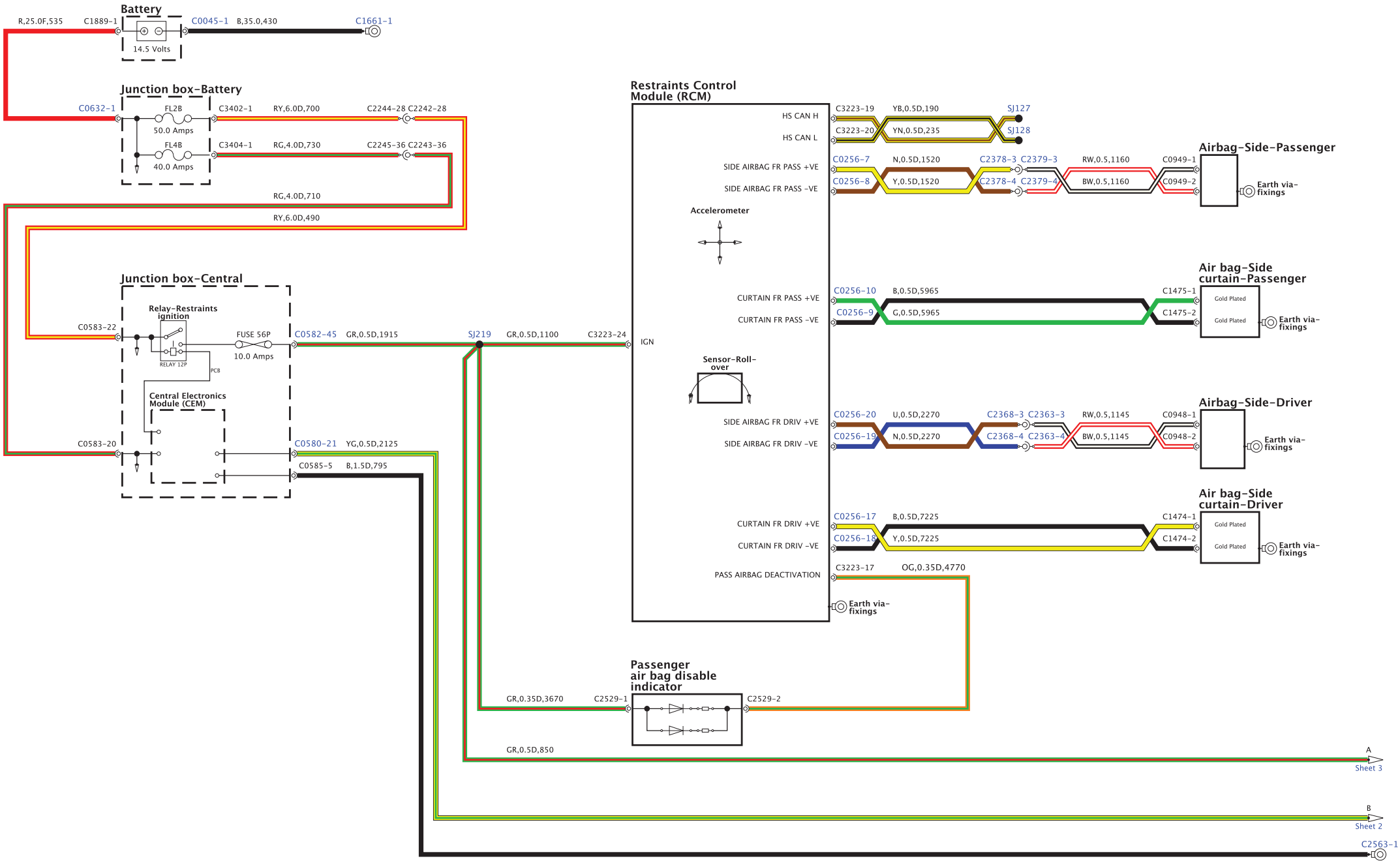
Battery
R,25.0F,535
C1889-1
C0045-1
B,35.0,430
C1661-1
14.5 Volts
Junction box-Battery
C0632-1
FL2B
50.0 Amps
FL4B
40.0 Amps
C3402-1
RY,6.0D,700
C2244-28 C2242-28
C3404-1
RG,4.0D,730
C2245-36 C2243-36
RG,4.0D,710
RY,6.0D,490
Junction box-Central
Relay-Restraints ignition
RELAY 12P
PCB
FUSE 56P
10.0 Amps
Central Electronics Module (CEM)
C0583-22
C0583-20
C0582-45
GR,0.5D,1915
C0580-21
YG,0.5D,2125
C0585-5
B,1.5D,795
SJ219
GR,0.5D,1100
C3223-24
Restraints Control Module (RCM)
IGN
HS CAN H
HS CAN L
SIDE AIRBAG FR PASS +VE
SIDE AIRBAG FR PASS -VE
Accelerometer
CURTAIN FR PASS +VE
CURTAIN FR PASS -VE
Sensor-Roll-over
SIDE AIRBAG FR DRIV +VE
SIDE AIRBAG FR DRIV -VE
CURTAIN FR DRIV +VE
CURTAIN FR DRIV -VE
PASS AIRBAG DEACTIVATION
C3223-19
YB,0.5D,190
SJ127
C3223-20
YN,0.5D,235
SJ128
Airbag-Side-Passenger
C0256-7
N,0.5D,1520
C2378-3 C2379-3
RW,0.5,1160
C0949-1
C0256-8
Y,0.5D,1520
C2378-4 C2379-4
BW,0.5,1160
C0949-2
Earth via-fixings
Air bag-Side curtain-Passenger
C0256-10
B,0.5D,5965
C1475-1
Gold Plated
C0256-9
G,0.5D,5965
C1475-2
Gold Plated
Earth via-fixings
Airbag-Side-Driver
C0256-20
U,0.5D,2270
C2368-3 C2363-3
RW,0.5,1145
C0948-1
C0256-19
N,0.5D,2270
C2368-4 C2363-4
BW,0.5,1145
C0948-2
Earth via-fixings
Air bag-Side curtain-Driver
C0256-17
B,0.5D,7225
C1474-1
Gold Plated
C0256-18
Y,0.5D,7225
C1474-2
Gold Plated
Earth via-fixings
C3223-17
OG,0.35D,4770
Earth via-fixings
Passenger air bag disable indicator
GR,0.35D,3670
C2529-1
C2529-2
GR,0.5D,850
A
Sheet 3
B
Sheet 2
C2563-1

BH42-70150-A-A-02-03-Service (L322-11MY-J081)

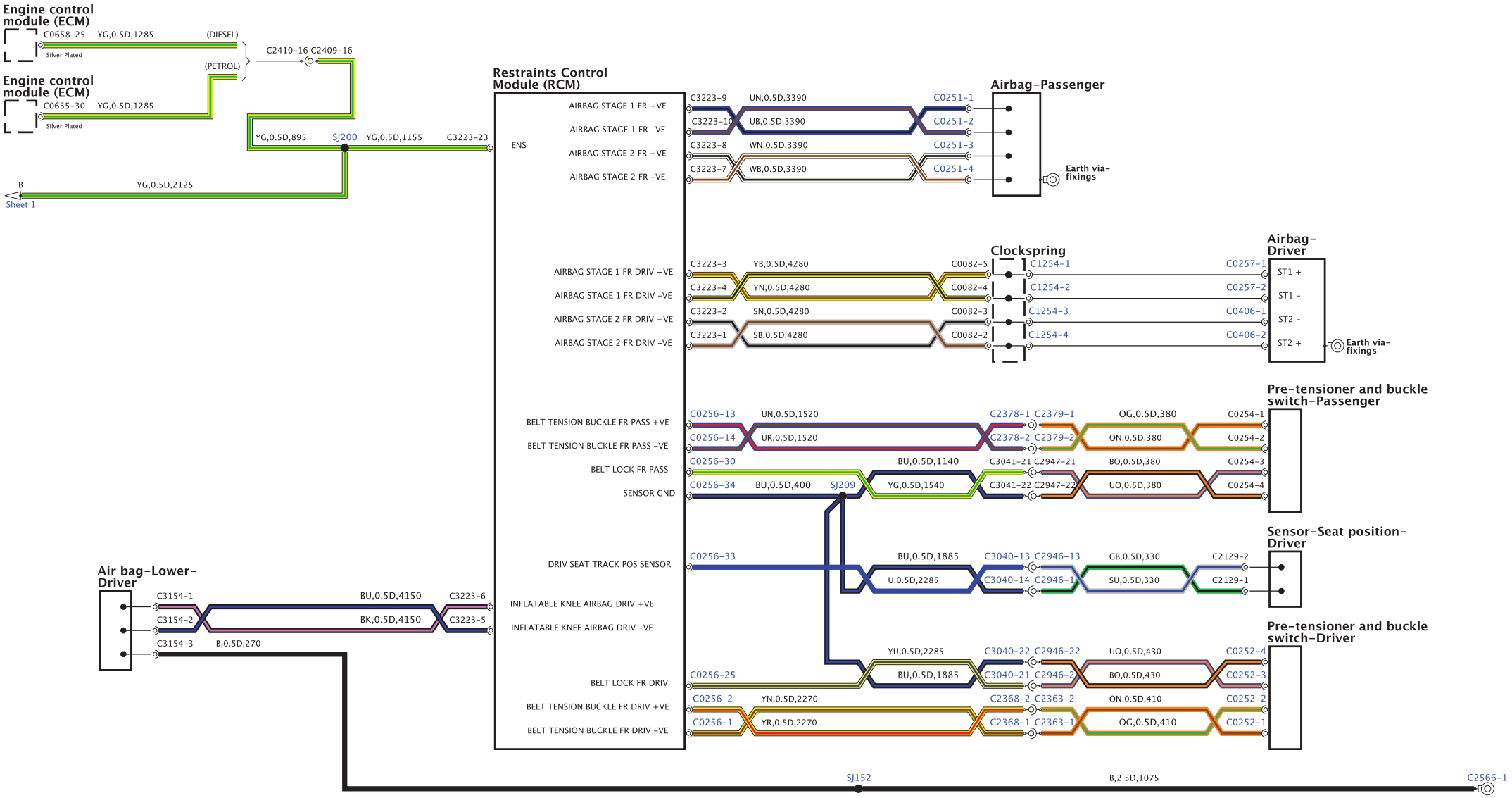

BH42-70150-A-A-03-03-Service (L322-11MY-JOB1)

