2003 CR-V Online Reference Owner's Manual

Use these links (and links throughout this manual) to navigate through this reference.
For a printed owner's manual, click on authorized manuals or go to www.helminc.com.

Contents

Owner's Identification Form

Introduction i

A Few Words About Safety ii

Important Handling Information iii

Your Vehicle at a Glance 2

Driver and Passenger Safety 5
Proper use and care of your vehicle's seat belts, and Supplemental Restraint System.

Instruments and Controls 63
Instrument panel indicator and gauge, and how to use dashboard and steering column controls.

Comfort and Convenience Features 127
How to operate the climate control system, the audio system, and other convenience features.

Before Driving 183
What gasoline to use, how to break-in your new vehicle, and how to load luggage and other cargo.

Driving 197
The proper way to start the engine, shift the transmission, and park, plus towing a trailer.

Maintenance 233
The Maintenance Schedule shows you when you need to take your vehicle to the dealer.

Appearance Care 297
Tips on cleaning and protecting your vehicle. Things to look for if your vehicle ever needs body repairs.

Taking Care of the Unexpected 307
This section covers several problems motorists sometimes experience, and how to handle them.

Technical Information 339
ID numbers, dimensions, capacities, and technical information.

Warranty and Customer Relations (U.S. and Canada) 353
A summary of the warranties covering your new Honda, and how to contact us.

Authorized Manuals (U.S. only) 357
How to order manuals and other technical literature.

Index I

Service Information Summary
A summary of information you need when you pull up to the fuel pump.

Owner's Identification

OWNER _____

_____

ADDRESS _____
STREET

_____ _____ _____
CITY STATE/PROVINCE ZIP CODE/ POSTAL CODE

V. I. N. _____

DELIVERY DATE _____
(Date sold to original retail purchaser)

DEALER NAME _____ DEALER NO. _____

ADDRESS _____
STREET

_____ _____ _____
CITY STATE/PROVINCE ZIP CODE/ POSTAL CODE

OWNER'S SIGNATURE _____

DEALER'S SIGNATURE _____

This Owner's Manual should be considered a permanent part of the vehicle, and should remain with the vehicle when it is sold.

This Owner's Manual covers all models of the CR-V. You may find descriptions of equipment and features that are not on your particular model.

The information and specifications included in this publication were in effect at the time of approval for printing. Honda Motor Co., Ltd. reserves the right, however, to discontinue or change specifications or design at any time without notice and without incurring any obligation whatsoever.

POUR CLIENTS CANADIEN
AVIS IMPORTANT: Si vous avez besoin d'un Manuel du Conducteur en français, veuillez demander à votre concessionnaire de commander le numéro de pièce 33S9AC10

Introduction

Congratulations! Your selection of a 2003 Honda CR-V was a wise investment. It will give you years of driving pleasure.

One of the best ways to enhance the enjoyment of your new Honda is to read this manual. In it, you will learn how to operate its driving controls and convenience items. Afterwards, keep this owner's manual in your vehicle so you can refer to it at any time.

Several warranties protect your new Honda. Read the warranty booklet thoroughly so you understand the coverages and are aware of your rights and responsibilities.

Maintaining your vehicle according to the schedules given in this manual helps to keep your driving trouble-free while it preserves your investment. When your vehicle needs maintenance, keep in mind that your Honda dealer's staff is specially trained in servicing the many systems unique to your Honda. Your Honda dealer is dedicated to your satisfaction and will be pleased to answer any questions and concerns.

California Proposition 65 Warning

WARNING: This product contains or emits chemicals known to the State of California to cause cancer and birth defects or other reproductive harm.

As you read this manual, you will find information that is preceded by a NOTICE symbol. This information is intended to help you avoid damage to your Honda, other property, or the environment.

A Few Words About Safety

Your safety, and the safety of others, is very important. And operating this vehicle safely is an important responsibility.

To help you make informed decisions about safety, we have provided operating procedures and other information on labels and in this manual. This information alerts you to potential hazards that could hurt you or others.

Of course, it is not practical or possible to warn you about all the hazards associated with operating or maintaining your vehicle. You must use your own good judgement.

You will find this important safety information in a variety of forms, including:

- **Safety Labels** — on the vehicle.
- **Safety Messages** — preceded by a safety alert symbol ⚠ and one of three signal words: **DANGER**, **WARNING**, or **CAUTION**. These signal words mean:

⚠ DANGER	You WILL be KILLED or SERIOUSLY HURT if you don't follow instructions.
⚠ WARNING	You CAN be KILLED or SERIOUSLY HURT if you don't follow instructions.
⚠ CAUTION	You CAN be HURT if you don't follow instructions.

- **Safety Headings** — such as Important Safety Reminders or Important Safety Precautions.
- **Safety Section** — such as Driver and Passenger Safety.
- **Instructions** — how to use this vehicle correctly and safely.

This entire book is filled with important safety information — please read it carefully.

Important Handling Information

Your CR-V has higher ground clearance than a passenger vehicle designed for use only on pavement. Higher ground clearance has many advantages for off-highway driving. It allows you to travel over bumps, obstacles, and rough terrain. It also provides good visibility so you can anticipate problems earlier.

These advantages come at some cost. Because your vehicle is taller and rides higher off the ground, it has a high center of gravity. This means your vehicle can tip or roll over if you make abrupt turns. Utility vehicles have a significantly higher rollover rate than other types of vehicles. In a rollover crash, an unbelted person is significantly more likely to die than a person wearing a seat belt. As a reminder, make sure you and your passengers always wear seat belts.

For information on how to reduce the risk of rollover, read “Driving Guidelines” on page 198 of this manual and the *Off-Highway Guidelines* section on page 226 . Failure to operate this vehicle correctly may result in loss of control or an accident.

Your Vehicle at a Glance

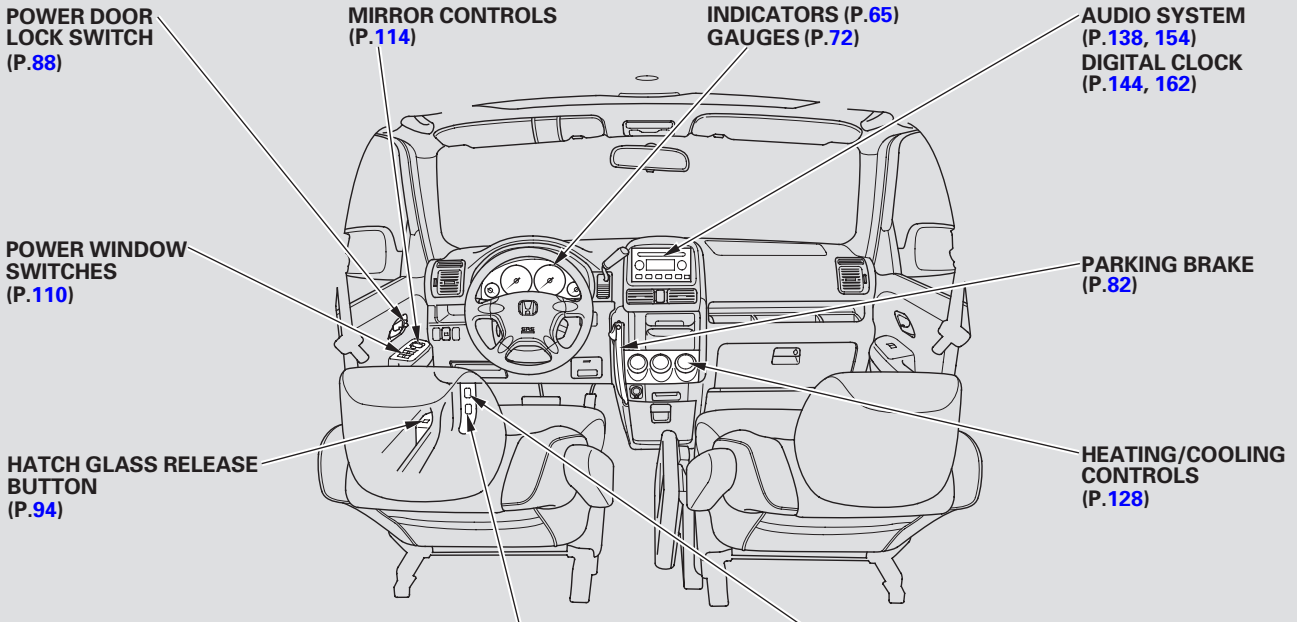

A/T model is shown.

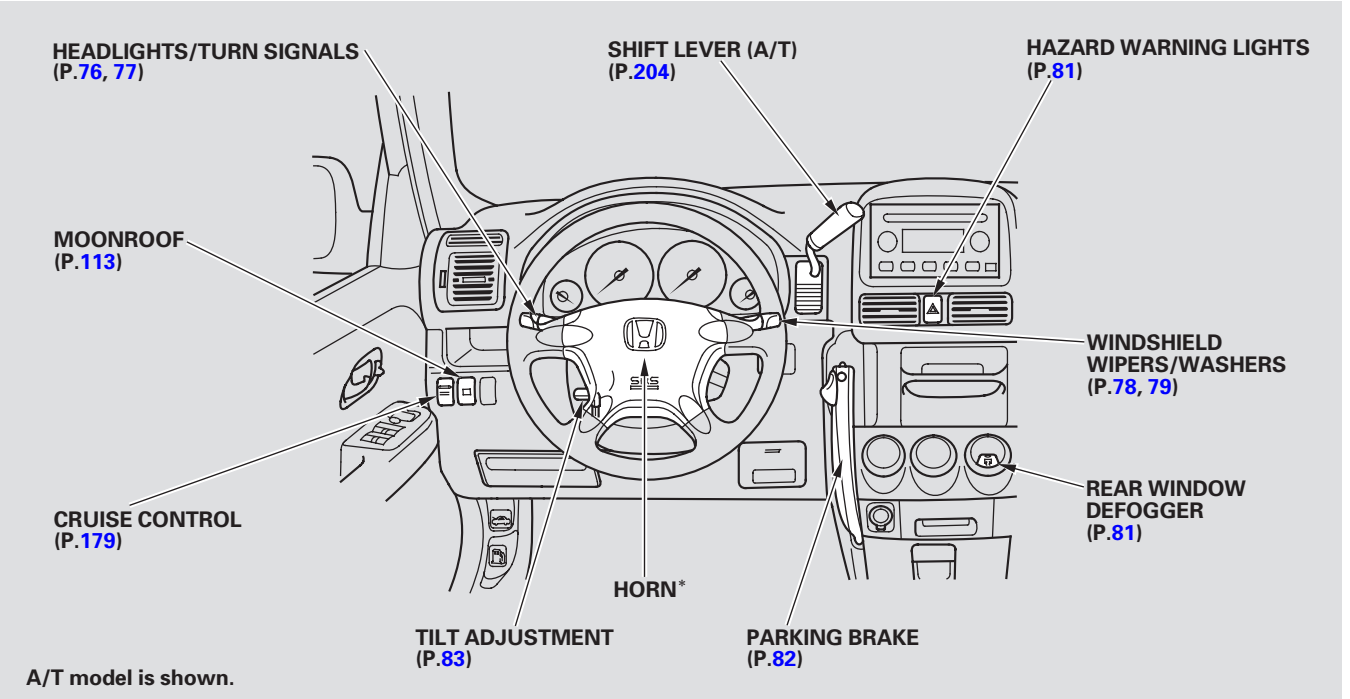

∗ : To use the horn, press the center pad of the steering wheel.

Driver and Passenger Safety

This section gives you important information about how to protect yourself and your passengers. It shows you how to use seat belts properly. It explains your Supplemental Restraint System. And it tells you how to properly restrain infants and children in your vehicle.

Important Safety Precautions 6
Your Vehicle's Safety Features..... 7
Seat Belts 8
Airbags..... 10
Seats and Seat-Backs..... 11
Head Restraints 11
Door Locks..... 11
Pre-Drive Safety Checklist 12
Protecting Adults..... 13
1. Close and Lock the Doors 13
2. Adjust the Front Seats 13
3. Adjust the Seat-Backs 15
4. Adjust the Head Restraints 16
5. Fasten and Position the Seat Belts 17
6. Adjust the Steering Wheel 20
7. Maintain a Proper Sitting Position 20
Advice for Pregnant Women..... 21
Additional Safety Precautions.... 22
Protecting Children 24
All Children Must Be Restrained 24
Children Should Sit in the Back Seat 25
The Passenger's Front Airbag Poses Serious Risks to Children 25
If You Must Drive with Several Children 28
If a Child Requires Close Attention 28
Additional Safety Precautions.... 28
General Guidelines for Using Child Seats..... 29
Protecting Infants..... 34
Protecting Small Children 38
Protecting Larger Children..... 42
Using Child Seats with Tethers..... 46
Using LATCH 47
Additional Information About Your Seat Belts..... 50
Seat Belt System Components... 50
Lap/Shoulder Belt..... 50
Automatic Seat Belt Tensioners..... 52
Seat Belt Maintenance 53
Additional Information About Your Airbags..... 54
SRS Components 54
How Your Front Airbags Work..... 54
How Your Side Airbags Work.... 56
How the SRS Indicator Light Works..... 57
How the Side Airbag Cutoff Indicator Light Works 58
Airbag Service..... 59
Additional Safety Precautions.... 59
Carbon Monoxide Hazard 60
Safety Labels..... 61

Important Safety Precautions

You'll find many safety recommendations throughout this section, and throughout this manual. The recommendations on this page are the ones we consider to be the most important.

Always Wear Your Seat Belt
A seat belt is your best protection in all types of collisions. Airbags supplement seat belts, but airbags are designed to inflate only in a moderate to severe frontal collision. So even though your vehicle is equipped with airbags, make sure you and your passengers always wear your seat belts, and wear them properly. (See page 17 .)

Restrain All Children
Children are safest when they are properly restrained in the back seat, not the front seat. A child who is too small for a seat belt must be properly restrained in a child safety seat. (See page 24 .)

Be Aware of Airbag Hazards
While airbags can save lives, they can cause serious or fatal injuries to occupants who sit too close to them, or are not properly restrained. Infants, young children, and short adults are at the greatest risk. Be sure to follow all instructions and warnings in this manual. (See page 10 .)

Don't Drink and Drive
Alcohol and driving don't mix. Even one drink can reduce your ability to respond to changing conditions, and your reaction time gets worse with every additional drink. So don't drink and drive, and don't let your friends drink and drive, either.

Control Your Speed
Excessive speed is a major factor in crash injuries and deaths. Generally, the higher the speed the greater the risk, but serious accidents can also occur at lower speeds. Never drive faster than is safe for current conditions, regardless of the maximum speed posted.

Keep Your Vehicle in Safe Condition
Having a tire blowout or a mechanical failure can be extremely hazardous. To reduce the possibility of such problems, check your tire pressures and condition frequently, and perform all regularly scheduled maintenance. (See page 238 .)

Your Vehicle's Safety Features

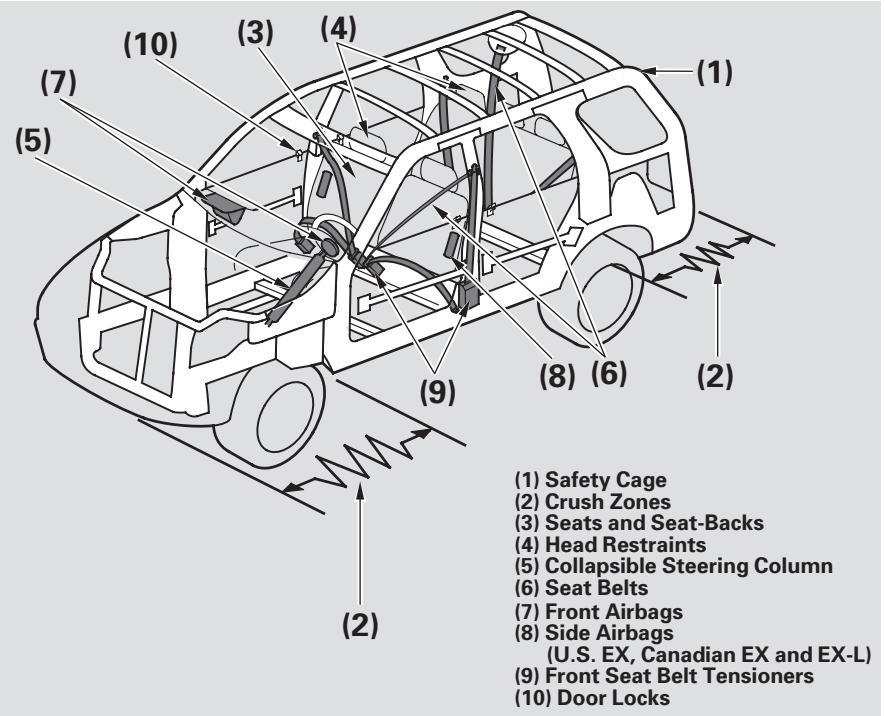

Your vehicle is equipped with many features that work together to protect you and your passengers during a crash.

Some safety features do not require any action on your part. These include a strong steel framework that forms a safety cage around the passenger compartment; front and rear crush zones that are designed to crumple and absorb energy during a crash; a collapsible steering column; and seat belt tensioners that automatically tighten the front seat belts in the event of a crash.

CONTINUED

Your Vehicle's Safety Features

These safety features are designed to reduce the severity of injuries in a crash. However, you and your passengers can't take full advantage of these safety features unless you remain sitting in a proper position and ***always wear your seat belts properly.*** In fact, some safety features can contribute to injuries if they are not used properly.

Seat Belts

For your safety, and the safety of your passengers, your vehicle is equipped with seat belts in all seating positions.

Your seat belt system also includes a light on the instrument panel to remind you and your passengers to fasten your seat belts.

Why Wear Seat Belts

Seat belts are the single most effective safety device for adults and larger children. (Infants and smaller children must be properly restrained in child seats.)

Not wearing a seat belt properly increases the chance of serious injury or death in a crash, even though your vehicle has airbags.

In addition, most states and all Canadian provinces require you to wear seat belts.

⚠ WARNING

Not wearing a seat belt properly increases the chance of serious injury or death in a crash, even if you have airbags.

Be sure you and your passengers always wear seat belts and wear them properly.

When properly worn, seat belts:

- Keep you connected to the vehicle so you can take advantage of the vehicle's built-in safety features.
- Help protect you in almost every type of crash, including frontal, side, and rear impacts and rollovers. In a rollover crash, an unbelted person is more likely to die than a person wearing a seat belt.
- Help keep you from being thrown against the inside of the vehicle and against other occupants.
- Keep you from being thrown out of the vehicle.
- Help keep you in a good position should the airbags ever deploy. A good position reduces the risk of injury from an inflating airbag, and allows you to get the best advantage from the airbag.

Of course, seat belts cannot completely protect you in every crash. But in most cases, seat belts can reduce your risk of serious injury.

What you should do: Always wear your seat belt, and make sure you wear it properly.

Your Vehicle's Safety Features

Airbags

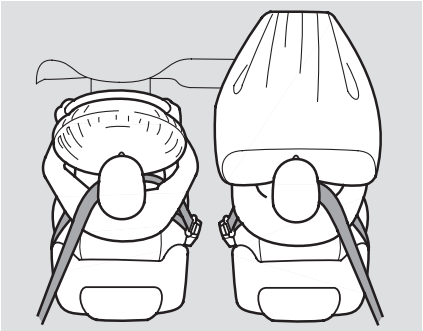

Your vehicle has a Supplemental Restraint System (SRS) with front airbags to help protect the heads and chests of the driver and a front seat passenger during a moderate to severe frontal collision.

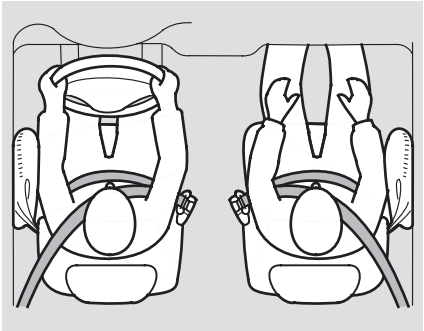

Only on models equipped with side airbags

Your vehicle also has side airbags to help protect the upper torso of the driver or a front seat passenger during a moderate to severe side impact.

The most important things you need to know about your airbags are:

- ***Airbags do not replace seat belts.*** They are designed to supplement the seat belts.
- ***Airbags offer no protection in rear impacts, rollovers, or minor frontal or side collisions.***
- ***Airbags can pose serious hazards.*** To do their job, airbags must inflate with tremendous force and speed. So while airbags help save lives, they can cause minor injuries, or more serious or even fatal injuries if occupants are not properly restrained or sitting properly.

What you should do: Always wear your seat belt properly, and sit upright and as far back as possible from the steering wheel or dashboard.

Seats and Seat-Backs

Your vehicle's seats are designed to keep you in a comfortable, upright position so you can take full advantage of the protection offered by seat belts and the energy absorbing materials in the seats.

How you adjust your seats and seat-backs can also affect your safety. For example, sitting too close to the steering wheel or dashboard increases the risk of you or your passenger being injured by striking the inside of the vehicle, or by an inflating airbag.

Reclining a seat-back too far reduces the seat belt's effectiveness and increases the chance that the seat's occupant will slide under the seat belt in a crash and be seriously injured.

What you should do: Move the front seats as far back as possible, and keep adjustable seat-backs in an upright position whenever the vehicle is moving.

Head Restraints

Head restraints can help protect you from whiplash and other injuries. For maximum protection, the back of your head should rest against the center of the head restraint.

Door Locks

Keeping your doors locked reduces the chance of being thrown out of the vehicle during a crash. It also helps prevent occupants from accidentally opening a door and falling out, and outsiders from unexpectedly opening your doors.

Your Vehicle's Safety Features

Pre-Drive Safety Checklist
To make sure you and your passengers get the maximum protection from your vehicle's safety features, check the following each time before you drive away:

- All adults, and children who have outgrown child safety seats, are wearing their seat belts and wearing them properly (see page 17).
- Any infant or small child is properly restrained in a child seat in the back seat (see page 24).
- Front seat occupants are sitting upright and as far back as possible from the steering wheel and dashboard (see page 13).
- Seat-backs are upright (see page 15).
- Head restraints are properly adjusted (see page 16).
- All doors and the tailgate are closed and locked (see page 13).
- All cargo is properly stored or secured (see page 193).

The rest of this section gives more detailed information about how you can maximize your safety.

Remember, however, that no safety system can prevent all injuries or deaths that can occur in severe crashes, even when seat belts are properly worn and the airbags deploy.

Introduction
The following pages provide instructions on how to properly protect the driver and other adult occupants.

These instructions also apply to children who have outgrown child seats and are large enough to wear lap/shoulder belts. (See page 42 for important additional guidelines on how to properly protect larger children.)

1.Close and Lock the Doors
After everyone has entered the vehicle, be sure the doors and tailgate (including the hatch glass) are closed.

Your vehicle has a door monitor light on the instrument panel to indicate when any door is not tightly closed.

Your vehicle also has a tailgate and hatch glass open indicator light on the instrument panel to indicate when the tailgate or the hatch glass is not tightly closed.

For safety, locking the doors reduces the chance that a passenger, especially a child, will open a door while the vehicle is moving and accidentally fall out. It also reduces the chance of someone being thrown out of the vehicle during a crash.

For security, locked doors can prevent an outsider from unexpectedly opening a door when you come to a stop.

See page 88 for how to lock the doors.

2.Adjust the Front Seats

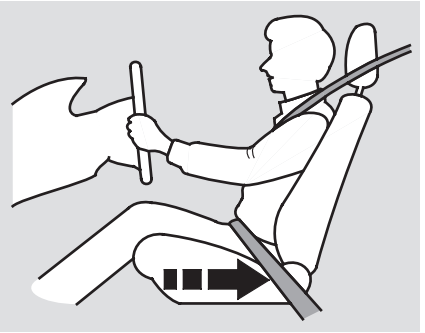

Any driver who sits too close to the steering wheel is at risk of being seriously injured or killed by striking the steering wheel, or from being struck by an inflating front airbag during a crash.

CONTINUED

Protecting Adults

To reduce the chance of injury, wear your seat belt properly, sit upright with your back against the seat, and move the seat away from the steering wheel to the farthest distance that allows you to maintain full control of the vehicle.

The National Highway Traffic Safety Administration and Transport Canada recommend that drivers adjust the seat so the center of the chest is at least 10 inches (25 cm) away from the center of the steering wheel. Also make sure your front seat passenger moves the seat as far to the rear as possible.

⚠ WARNING

Sitting too close to a front airbag can result in serious injury or death if the front airbags inflate.

Always sit as far back from the front airbags as possible.

Most shorter drivers can get far enough away from the steering wheel and still reach the pedals. However, if you are concerned about sitting too close, we recommend that you investigate whether some type of adaptive equipment may help.

Once your seat is adjusted correctly, rock it back and forth to make sure the seat is locked in position.

See page 97 for how to adjust the front seats.

3.Adjust the Seat-Backs

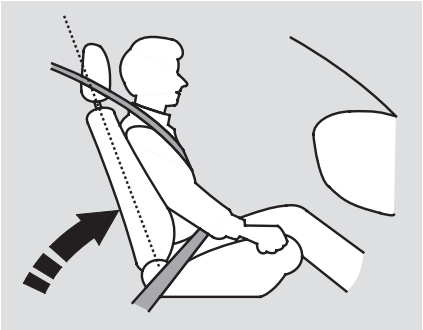

Adjust the driver's seat-back to a comfortable, upright position, leaving ample space between your chest and the airbag cover in the center of the steering wheel. If you sit too close to the steering wheel, you could be injured if the front airbag inflates.

A front passenger should also adjust the seat-back to an upright position, but as far from the dashboard as possible. A passenger who sits too close to the dashboard could be injured if the front airbag inflates.

Reclining a seat-back so that the shoulder part of the belt no longer rests against the occupant's chest reduces the protective capability of the belt. It also increases the chance of sliding under the belt in a crash and being seriously injured. The farther a seat-back is reclined, the greater the risk of injury.

⚠WARNING

Reclining the seat-back too far can result in serious injury or death in a crash.

Adjust the seat-back to an upright position and sit well back in the seat.

See page 97 for how to adjust seat-backs.

Protecting Adults

4.Adjust the Head Restraints

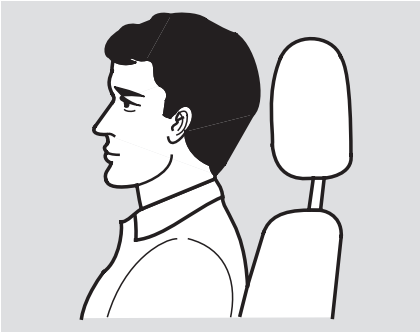

Before driving, make sure everyone with an adjustable head restraint has properly positioned the head restraint. The restraint should be positioned so the back of the occupant's head rests against the center of the restraint. A taller person should adjust the restraint as high as possible.

⚠WARNING

Improperly positioning head restraints reduces their effectiveness and you can be seriously injured in a crash.

Make sure head restraints are in place and positioned properly before driving.

Properly adjusted head restraints will help protect occupants from whiplash and other crash injuries.

See page 99 for how to adjust the head restraints.

5. Fasten and Position the Seat Belts

Insert the latch plate into the buckle, then tug on the belt to make sure the belt is securely latched. Also check that the belt is not twisted, because a twisted belt can cause serious injuries in a crash.

In the rear center seating position, be sure the detachable anchor is latched securely (see page 108).

Position the lap part of the belt as low as possible across your hips, then pull up on the shoulder part of the belt so the lap part fits snugly. This lets your strong pelvic bones take the force of a crash and reduces the chance of internal injuries.

If necessary, pull up on the belt again to remove any slack from the shoulder part, then check that the belt rests across the center of your chest and over your shoulder. This spreads the forces of a crash over the strongest bones in your upper body.

⚠ WARNING

Improperly positioning the seat belts can cause serious injury or death in a crash.

Make sure all seat belts are properly positioned before driving.

CONTINUED

Protecting Adults

If the seat belt touches or crosses your neck, or if it crosses your arm instead of your shoulder, you need to adjust the seat belt anchor height.

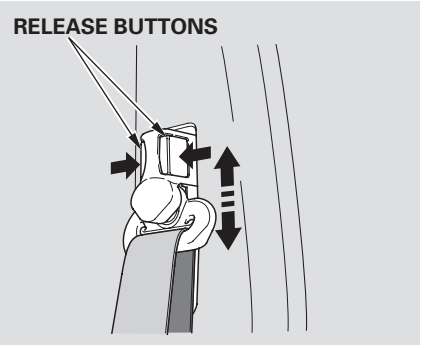

To adjust the height of a front seat belt anchor, squeeze the two release buttons and slide the anchor up or down as needed (it has four positions).

Never place the shoulder portion of a lap/shoulder belt under your arm or behind your back. This could cause very serious injuries in a crash.

Protecting Adults

If a seat belt does not seem to work as it should, it may not protect the occupant in a crash. ***No one should sit in a seat with an inoperative seat belt.*** Anyone using a seat belt that is not working properly can be seriously injured or killed. Have your Honda dealer check the belt as soon as possible.

See page 50 for additional information about your seat belt system and how to take care of your belts.

6. Adjust the Steering Wheel

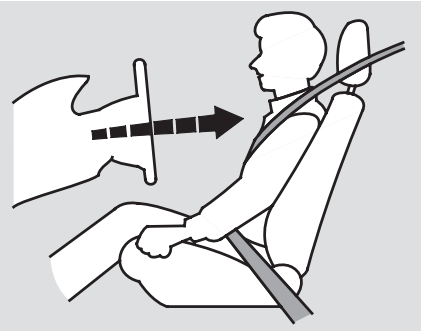

Adjust the steering wheel, if needed, so that the wheel points toward your chest, not toward your face.

Pointing the steering wheel toward your chest provides optimal protection from the airbag.

See page 83 for how to adjust the steering wheel.

7. Maintain a Proper Sitting Position

After all occupants have adjusted their seats and put on seat belts, it is very important that they continue to sit upright, well back in their seats, with their feet on the floor, until the vehicle is parked and the engine is off.

Sitting improperly can increase the chance of injury during a crash. For example, if an occupant slouches, lies down, turns sideways, sits forward, leans forward or sideways, or puts one or both feet up, the chance of injury during a crash is greatly increased.

In addition, an occupant who is out of position in the front seat can be seriously or fatally injured by striking interior parts of the vehicle, or by being struck by an inflating front airbag. Being struck by an inflating side airbag can result in possibly serious injuries.

⚠ WARNING

Sitting improperly or out of position can result in serious injury or death in a crash.

Always sit upright, well back in the seat, with your feet on the floor.

Protecting Adults

Remember, to get the best protection from your vehicle's airbags and other safety features, you must sit properly and wear your seat belt properly.

Advice for Pregnant Women

Because protecting the mother is the best way to protect her unborn child, a pregnant woman should always wear a seat belt whenever she drives or rides in a vehicle.

Remember to keep the lap portion of the belt as low as possible across your hips.

Pregnant women should also sit upright and as far back as possible from the steering wheel or dashboard. This will reduce the risk of injuries to both the mother and her unborn child that can be caused by a crash or an inflating airbag.

Each time you have a check-up, ask your doctor if it's okay for you to drive.

Protecting Adults

Additional Safety Precautions

- ***Never let passengers ride in the cargo area or on top of a folded-down back seat.*** All passengers must sit in locked, upright seats and be properly restrained by seat belts.

- ***Passengers should not stand up or change seats while the vehicle is moving.*** A passenger who is not wearing a seat belt during a crash or emergency stop can be thrown against the inside of the vehicle, against other occupants, or out of the vehicle.

- ***Two people should never use the same seat belt.*** If they do, they could be very seriously injured in a crash.

- ***Do not put any accessories on seat belts.*** Devices intended to improve occupant comfort or reposition the shoulder part of a seat belt can severely compromise the protective capability of the seat belt and increase the chance of serious injury in a crash.

- ***Do not place hard or sharp objects between yourself and a front airbag.*** Carrying hard or sharp objects on your lap, or driving with a pipe or other sharp objects in your mouth, can result in injuries if your front airbag inflates.

- ***Do not attach or place objects on the front airbag covers.*** Any object attached to or placed on the covers marked “SRS AIRBAG” in the center of the steering wheel and on top of the dashboard could interfere with the proper operation of the airbags. Or, if the airbags inflate, the objects could be propelled inside the vehicle and hurt someone.

- ***On models with side airbags, do not attach hard objects on or near a front door.*** If a side airbag inflates, a cup holder or other hard object attached on or near the door could be propelled inside the vehicle and hurt someone.

- ***Keep your hands and arms away from the airbag covers.*** If your hands or arms are close to the airbag cover in the center of the steering wheel or on top of the dashboard, they could be injured if the front airbag inflates.

Protecting Children

Children depend on adults to protect them. However, despite their best intentions, many parents and other adults may not know how to *properly* protect young passengers.

So if you have children, or if you ever need to drive with a grandchild or other children in your vehicle, be sure to read this section.

⚠ WARNING

Children who are unrestrained or improperly restrained can be seriously injured or killed in a crash.

Any child too small for a seat belt should be properly restrained in a child seat. A larger child should be properly restrained with a seat belt.

All Children Must Be Restrained

Each year, many children are injured or killed in vehicle crashes because they are either unrestrained or not properly restrained. In fact, vehicle accidents are the number one cause of death of children ages 12 and under.

To reduce the number of child deaths and injuries, every state and Canadian province requires that infants and children be restrained whenever they ride in a vehicle.

Any child who is too small to wear a seat belt should be properly restrained in a child seat. (See page 29 .)

A larger child should always be restrained with a seat belt, and use a booster, if needed. (See page 42 .)

Additional Precautions to Parents

- ***Never hold an infant or child on your lap.*** If you are not wearing a seat belt in a crash, you could be thrown forward into the dashboard and crush the child.

  If you are wearing a seat belt, the child can be torn from your arms during a crash. For example, if your vehicle crashes into a parked vehicle at 30 mph (48 km/h), a 20-lb (9 kg) infant will become a 600-lb (275 kg) force, and you will not be able to hold on.

- ***Never put a seat belt over yourself and an infant or child.*** During a crash, the belt could press deep into the child and cause very serious injuries.

Children Should Sit in the Back Seat

According to accident statistics, children of all ages and sizes are safer when they are restrained in the back seat, not the front seat. The National Highway Traffic Safety Administration and Transport Canada recommend that all children ages 12 and under be properly restrained in the back seat.

In the back seat, children are less likely to be injured by striking hard interior parts during a collision or hard braking. Also, children cannot be injured by an inflating airbag when they ride in the back.

The Passenger's Front Airbag Poses Serious Risks to Children

Front airbags have been designed to help protect adults in a moderate to severe frontal collision. To do this, the passenger's front airbag is quite large, and it inflates with tremendous speed.

CONTINUED

Protecting Children

Infants

Never put a rear-facing child seat in the front seat of a vehicle equipped with a passenger's front airbag. If the airbag inflates, it can hit the back of the child seat with enough force to kill or very seriously injure an infant.

Small Children

Placing a forward-facing child seat in the front seat of a vehicle equipped with a passenger's front airbag can be hazardous. If the vehicle seat is too far forward, or the child's head is thrown forward during a collision, an inflating front airbag can strike the child with enough force to kill or very seriously injure a small child.

Larger Children

Children who have outgrown child seats are also at risk of being injured or killed by an inflating passenger's front airbag. Whenever possible, larger children should sit in the back seat, in a booster seat if needed, and be properly restrained with a seat belt. (See page 42 for important information about protecting larger children.)

U.S. Models

To remind you of the passenger's front airbag hazards, and that children must be properly restrained in the back seat, your vehicle has warning labels on the dashboard and on the driver's and front passenger's visors. Please read and follow the instructions on these labels.

⚠ WARNING

DEATH or SERIOUS INJURY can occur

- Children 12 and under can be killed by the air bag
- The BACK SEAT is the SAFEST place for children
- NEVER put a rear-facing child seat in the front
- Sit as far back as possible from the air bag
- ALWAYS use SEAT BELTS and CHILD RESTRAINTS

⚠ WARNING

Children Can Be KILLED or INJURED by Passenger Air Bag

- The back seat is the safest place for children 12 and under.
- Make sure all children use seat belts or child seats.

To be removed by owner only.

Canadian Models

To remind you of the front airbag hazards, your vehicle has warning labels on the driver's and front passenger's visors. Please read and follow the instructions on these labels.

CAUTION
TO AVOID SERIOUS INJURY:

- FOR MAXIMUM SAFETY PROTECTION IN ALL TYPES OF CRASHES,YOU MUST ALWAYS WEAR YOUR SAFETY BELT.
- DO NOT INSTALL REARWARD-FACING CHILD SEATS IN ANY FRONT PASSENGER SEAT POSITION.
- DO NOT SIT OR LEAN UNNECESSARILY CLOSE TO THE AIR BAG.
- DO NOT PLACE ANY OBJECTS OVER THE AIR BAG OR BETWEEN THE AIR BAG AND YOURSELF.
- SEE THE OWNER'S MANUAL FOR FURTHER INFORMATION AND EXPLANATIONS.

PRECAUTIONS:
POUR EVITER DES BLESSURES GRAVES:

- POUR PROFITER D´UNE PROTECTION MAXIMALE LORS D´UNE COLLISION BOUCLEZ TOUJOURS VOTRE CEINTURE DE SECURITE.
- N´INSTALLEZ JAMAIS UN SIEGE POUR ENFANTS FAISANT FACE A L´ARRIERE SUR LE SIEGE DU PASSAGER AVANT.
- NE VOUS APPUYEZ PAS ET NE VOUS ASSOYEZ PAS PRES DU COUSSIN GONFLABLE.
- NE DEPOSEZ AUCUN OBJET SUR LE COUSSIN GONFLABLE OU ENTRE LE COUSSIN GONFLABLE ET VOUS.
- LISEZ LE GUIDE UTILISATEUR POUR DE PLUS AMPLES RENSEIGNEMENTS.

Protecting Children

If You Must Drive with Several Children

Your vehicle has three seating positions in the back seat where children can be properly restrained.

If you ever have to carry more than three children in your vehicle:

- Place the largest child in the front seat, provided the child is large enough to wear a seat belt properly (see page 42).
- Move the vehicle seat as far to the rear as possible (see page 13).
- Have the child sit upright and well back in the seat (see page 20).
- Make sure the seat belt is properly positioned and secured (see page 17).

If a Child Requires Close Attention

Many parents say they prefer to put an infant or small child in the front passenger seat so they can watch the child, or because the child requires attention.

Placing a child in the front seat exposes the child to hazards from the passenger's front airbag, and paying close attention to a child distracts the driver from the important tasks of driving, placing both of you at risk.

If a child requires physical attention or frequent visual contact, we strongly recommend that another adult ride with the child in the back seat. The back seat is far safer for a child than the front.

Additional Safety Precautions

- ***Use childproof door locks to prevent children from opening the doors.*** Using this feature will prevent children from opening the doors and accidentally falling out (see page 93).
- ***Use the main power window switch to prevent children from opening the rear windows.*** Using this feature will prevent children from playing with the windows, which could expose them to hazards or distract the driver (see page 110).

- ***Do not leave children alone in your vehicle.*** Leaving children without adult supervision is illegal in most states and Canadian provinces, and can be very hazardous. For example, infants and small children left in a vehicle on a hot day can die from heatstroke. And children left alone with the key in the ignition can accidentally set the vehicle in motion, possibly injuring themselves or others.

- ***Lock all doors and the tailgate when your vehicle is not in use.*** Children who play in vehicles can accidentally get trapped inside the vehicle. Teach your children not to play in or around vehicles.

- ***Keep vehicle keys and remote transmitters out of the reach of children.*** Even very young children learn how to unlock vehicle doors, turn on the ignition, and open the tailgate or hatch glass, which can lead to accidental injury or death.

General Guidelines for Using Child Seats

The following pages give general guidelines for selecting and installing child seats for infants and small children.

CONTINUED

Protecting Children

Selecting a Child Seat
To provide proper protection, a child seat should meet three requirements:

1. ***The child seat should meet safety standards.*** The child seat should meet Federal Motor Vehicle Safety Standard 213 (FMVSS 213) or Canadian Motor Vehicle Safety Standard 213 (CMVSS 213). Look for the manufacturer's statement of compliance on the box and seat.

2. ***The child seat should be of the proper type and size to fit the child.***

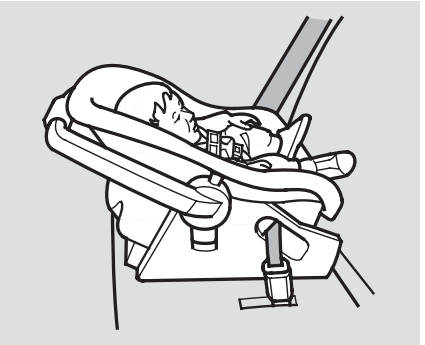

Infants: Children up to about one year old should be restrained in a rear-facing, reclining child seat. Only a rear-facing seat provides the proper support to protect an infant's head, neck, and back. See page 34 for additional information on protecting infants.

Small Children: A child who is too large for a rear-facing child seat, and who can sit up without support, should be restrained in a forward-facing child seat. See page 38 for additional information on protecting small children.

3. The child seat should fit the vehicle seating position (or positions) where it will be used.

Due to variations in the design of child seats, vehicle seats, and seat belts, all child seats will not fit all vehicle seating positions.

However, Honda is confident that one or more child seat models can fit and be properly installed in all recommended seating positions in your vehicle.

Before purchasing a child seat, we recommend that parents test the child seat in the specific vehicle seating position (or positions) where they intend to use the seat. If a previously purchased child seat does not fit, you may need to buy a different one that will fit.

Your vehicle has lower anchors installed for use with LATCH (Lower Anchors and Tethers for Children) - compatible child seats. For more information, see page 48 .

CONTINUED

Protecting Children

Placing a Child Seat
This page briefly summarizes Honda's recommendations on where to place rear-facing and forward-facing child seats in your vehicle.

Airbags Pose Serious Risks to Children

The passenger's front airbag inflates with enough force to kill or seriously injure an infant in a rear-facing child seat.

A small child in a forward-facing child seat is also at risk. If the vehicle seat is too far forward, or the child's head is thrown forward during a collision, an inflating front airbag can kill or seriously injure the child.

If a small child must ride in the front, follow the instructions provided in this section.

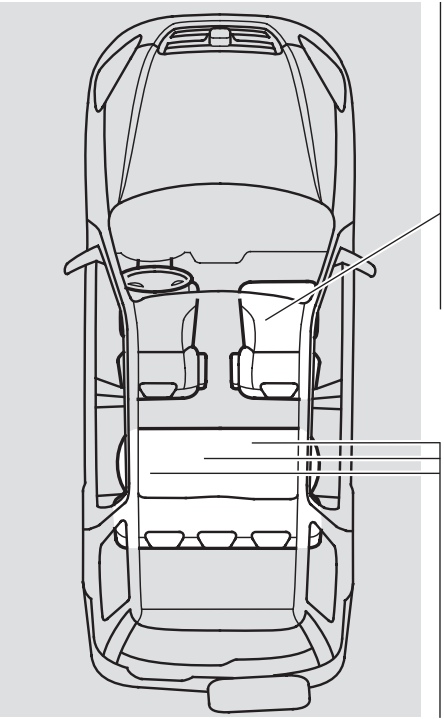

Front Passenger's Seat

Infants: Never in the front seat, due to the front airbag hazard.

Small children: Not recommended, due to the front airbag hazard. If a small child must ride in front, move the vehicle seat to the rear-most position and secure a forward-facing child seat with the seat belt (see page 39).

Back Seats

Infants: Recommended positions. Properly secure a rear-facing child seat (see page 35).

Small children: Recommended positions. Properly secure a forward-facing child seat (see page 39).

Installing a Child Seat
After selecting a proper child seat, and a good position to install the seat, there are three main steps in installing the seat:

1. ***Properly secure the child seat to the vehicle.*** All child seats are designed to be secured to the vehicle with the lap part of a lap/shoulder belt. Some child seats can be secured to the vehicle's LATCH anchorage system instead. A child whose seat is not properly secured to the vehicle can be endangered in a crash. See pages 35 , 39 and 48 for instructions on how to properly secure child seats in this vehicle.

2. ***Make sure the child seat is firmly secured.*** After installing a child seat, push and pull the seat forward and from side to side to verify that it is secure.

To provide security during normal driving maneuvers as well as during a collision, we recommend that parents secure a child seat as firmly as possible.

However, a child seat does not need to be "rock solid." In some vehicles or seating positions, it may be difficult to install a child seat so that it does not move at all. Some side-to-side or back-and-forth movement can be expected and should not reduce the child seat's effectiveness.

If the child seat is not secure, try installing it in a different seating position, or use a different style of child seat that can be firmly secured in the desired seating position.

3. ***Secure the child in the child seat.*** Make sure the child is properly strapped in the child seat according to the child seat maker's instructions. A child who is not properly secured in a child seat can be thrown out of the seat in a crash and be seriously injured.

Storing a Child Seat
When you are not using a child seat, either remove it and store it in a safe place, or make sure it is properly secured. An unsecured child seat can be thrown around the vehicle during a crash or sudden stop and injure someone.

Protecting Infants

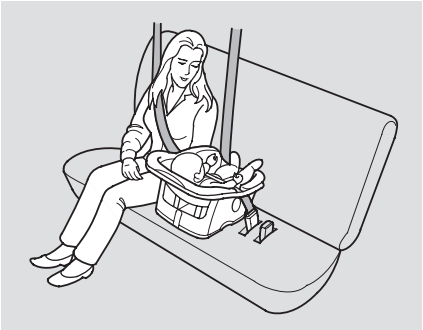

Child Seat Type
Only a rear-facing child seat provides proper support for a baby's head, neck, and back. Infants up to about one year of age must be restrained in a rear-facing child seat.

Two types of seats may be used: a seat designed exclusively for infants, or a convertible seat used in the rear-facing, reclining mode.

⚠ WARNING

Placing a rear-facing child seat in the front seat can result in serious injury or death if the passenger's front airbag inflates.

Always place a rear-facing child seat in the back seat, not the front.

We recommend that an infant be restrained in a rear-facing child seat until the infant is at least one year old, reaches the seat maker's weight or height limit, and is able to sit up without support.

Rear-Facing Child Seat Placement
In this vehicle, a rear-facing child seat can be placed in any seating position in the back, but not in the front seat.

Never put a rear-facing child seat in the front seat. If the passenger's front airbag inflates, it can hit the back of the child seat with enough force to kill or seriously injure an infant. If an infant must be closely watched, we recommend that another adult sit in the back seat with the baby.

Do not put a rear-facing child seat in a forward-facing position. If placed facing forward, an infant could be very seriously injured during a frontal collision.

When properly installed, a rear-facing child seat may prevent the driver or a front-seat passenger from moving the seat as far back as recommended (see page 13). Or it may prevent them from locking the seat-back in the desired upright position (see page 15).

In either case, we recommend that you place the child seat directly behind the front passenger seat, move the front seat as far forward as needed, and leave it unoccupied. Or you may wish to get a smaller child seat that allows you to safely carry a front passenger.

Rear-Facing Child Seat Installation

The lap/shoulder belts in the back seats have a locking mechanism that must be activated to secure a child seat.

The following pages provide instructions and tips on how to secure a rear-facing child seat with this type of seat belt.

If you have a child seat designed to be attached to the vehicle's LATCH anchorage system, follow the instructions on page 48 .

1. Before installing a child seat in the center seating position of the rear seat, make sure the seat belt detachable anchor is securely latched (see page 108).

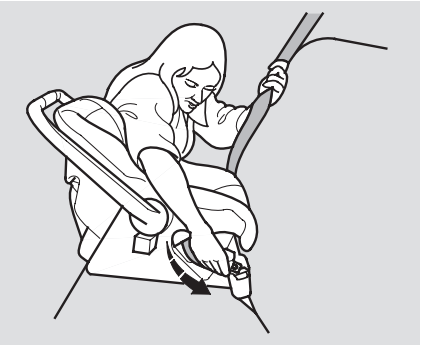

2. With the child seat in the desired back seating position, route the belt through the child seat according to the seat maker's instructions, then insert the latch plate into the buckle.

CONTINUED

Protecting Children

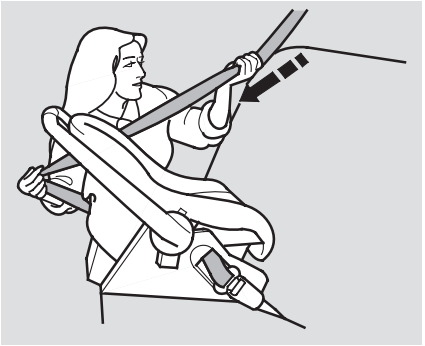

3. To activate the lockable retractor, slowly pull the shoulder part of the belt all the way out until it stops, then let the belt feed back into the retractor (you might hear a clicking noise as the belt retracts).

4. After the belt has retracted, tug on it. If the belt is locked, you will not be able to pull it out. If you can pull the belt out, it is not locked and you will need to repeat these steps.

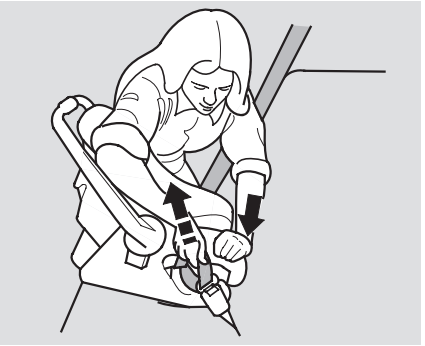

5. After confirming that the belt is locked, grab the shoulder part of the belt near the buckle and pull up to remove any slack from the lap part of the belt. Remember, if the lap part of the belt is not tight, the child seat will not be secure. To remove slack, it may help to put weight on the child seat, or push on the back of the seat, while pulling up on the belt.

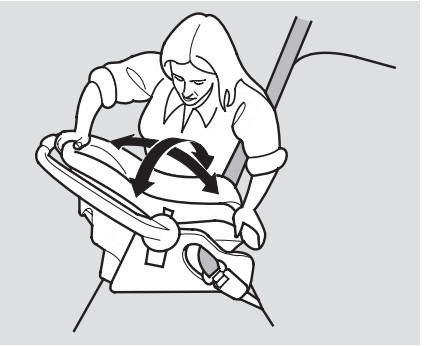

6. Push and pull the child seat forward and from side to side to verify that it is secure enough to stay upright during normal driving maneuvers. If the child seat is not secure, unlatch the belt, allow it to retract fully, then repeat these steps.

To deactivate the locking mechanism and remove a child seat, unlatch the buckle, unroute the seat belt, and let the belt fully retract.

Rear-Facing Child Seat Installation Tips

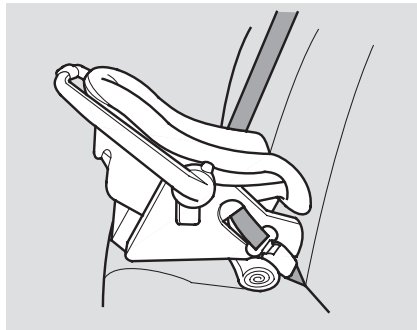

For proper protection, an infant must ride in a reclined, or semi-reclined position. To determine the proper reclining angle, check with the baby's doctor or follow the seat maker's recommendations.

To achieve the desired reclining angle, it may help to put a rolled up towel under the toe of the child seat, as shown.

Protecting Children

Protecting Small Children

Child Seat Type
A child at least one year old who can sit up without support, and who fits within the child seat maker's weight and height limits, should be restrained in a forward-facing, upright child seat.

Of the different seats available, we recommend those that have a five-point harness system as shown.

We also recommend that a small child stay in the child seat as long as possible, until the child reaches the weight or height limit for the seat.

Child Seat Placement
In this vehicle, the best place to install a forward-facing child seat is in one of the seating positions in the back seat.

Placing a forward-facing child seat in the front seat of a vehicle equipped with a passenger's front airbag can be hazardous. If the vehicle seat is too far forward, or the child's head is thrown forward during a collision, an inflating front airbag can strike the child with enough force to cause very serious or fatal injuries. If a small child must be closely watched, we recommend that another adult sit in the back seat with the child.

⚠ WARNING

Improperly placing a forward-facing child seat in the front seat can result in serious injury or death if the front airbags inflate.

If you must place a forward-facing child seat in front, move the vehicle seat as far back as possible and properly restrain the child.

If it is necessary to put a forward-facing child seat in the front, move the vehicle seat as far to the rear as possible, be sure the child seat is firmly secured to the vehicle, and that the child is properly strapped in the seat.

Child Seat Installation

The lap/shoulder belts in the back and front passenger seating positions have a locking mechanism that must be activated to secure a child seat.

The following pages provide instructions on how to secure a forward-facing child seat with this type of seat belt.

If you have a child seat designed to be attached to the vehicle's LATCH anchorage system, follow the instructions on page 48 .

1. Before installing a child seat in the center seating position of the rear seat, make sure the seat belt detachable anchor is securely latched (see page 108).

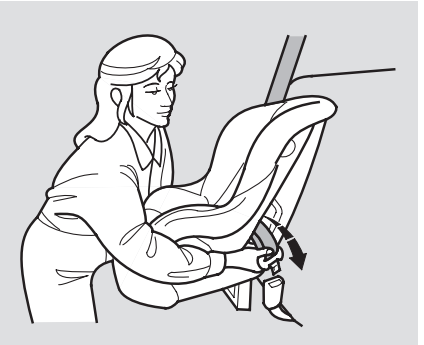

2. With the child seat in the desired seating position, route the belt through the child seat according to the seat maker's instructions, then insert the latch plate into the buckle.

CONTINUED

Protecting Children

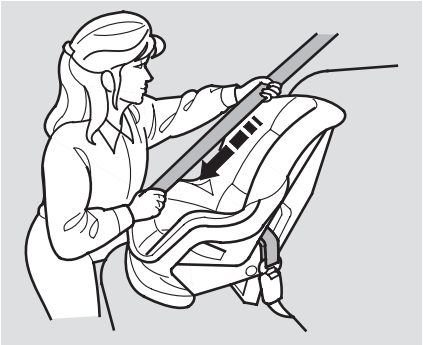

3. To activate the lockable retractor, slowly pull the shoulder part of the belt all the way out until it stops, then let the belt feed back into the retractor (you might hear a clicking noise as the belt retracts).

4. After the belt has retracted, tug on it. If the belt is locked, you will not be able to pull it out. If you can pull the belt out, it is not locked and you will need to repeat these steps.

5. After confirming that the belt is locked, grab the shoulder part of the belt near the buckle and pull up to remove any slack from the lap part of the belt. Remember, if the lap part of the belt is not tight, the child seat will not be secure. It may help to put weight on the child seat, or push on the back of the seat, while pulling up on the belt.

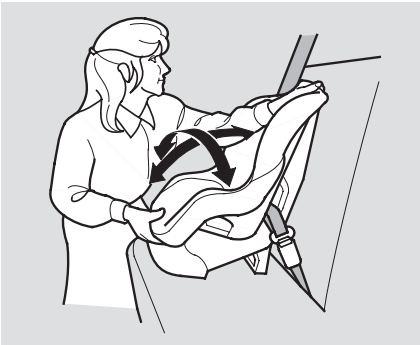

6. Push and pull the child seat forward and from side to side to verify that it is secure enough to stay upright during normal driving maneuvers. If the child seat is not secure, unlatch the belt, allow it to retract fully, then repeat these steps.

To deactivate the locking mechanism in order to remove a child seat, unlatch the buckle, unroute the seat belt, and let the belt fully retract.

Protecting Children

Protecting Larger Children

When a child reaches the recommended weight or height limit for a forward-facing child seat, the child should sit in the back seat on a booster and wear a lap/shoulder belt.

We recommend that the child use a booster seat until the child is tall enough to use the seat belt without a booster.

The following pages give instructions on how to check proper seat belt fit, what kind of booster seat to use if one is needed, and important precautions for a child who must sit in the front seat.

⚠ WARNING

Allowing a larger child to sit improperly in the front seat can result in injury or death if the passenger's front airbag inflates.

If a larger child must sit in front, make sure the child moves the seat as far back as possible, uses a booster seat if needed, and wears the seat belt properly.

Checking Seat Belt Fit

To determine if a lap/shoulder belt properly fits a child, have the child sit in the rear seat, all the way back against the seat and have them put on the seat belt. Follow the instructions on page 17 . Then check how the belt fits.

If the shoulder part of the belt rests over the child's collarbone and against the center of the chest, and if the lap belt rests over the child's hipbones and touches the tops of their thighs as shown, the child is probably big enough to wear the seat belt.

However, if the shoulder belt touches or crosses the child's neck, or if the lap belt crosses the child's stomach, the child needs to use a booster seat.

Do not let a child wear a seat belt across the neck or over the stomach. This could result in serious neck and internal injuries during a crash.

Do not let a child put the shoulder part of a seat belt behind the back or under the arm. This could cause very serious injuries during a crash. It also increases the chance that the child will slide under the belt in a crash and be injured.

Do not put any accessories on a seat belt. Devices intended to improve occupant comfort or reposition the shoulder part of a seat belt, severely compromise the protective capability of the seat belt and increase the chance of serious injury in a crash.

Two children should never use the same seat belt. If they do, they could be very seriously injured in a crash.

Using a Booster Seat

If a child needs a booster seat, we recommend choosing a high or low-back style that allows the child to be directly secured with the lap/shoulder belt.

Whichever style you select, follow the booster seat maker's instructions.

CONTINUED

Protecting Children

A child should continue using a booster seat until they exceed the booster seat manufacturer's requirements.

Even then, they may still need to use a booster seat. Note that some states now require children to use boosters until they reach a certain age and/or weight. Be sure to check current laws in the state or states where you intend to drive.

When Can a Larger Child Sit in Front

The National Highway Traffic Safety Administration and Transport Canada recommend that all children ages 12 and under be properly restrained in the back seat.

The back seat is the safest place for a child of any age or size.

In addition, the passenger's front airbag poses serious risks to children. If the seat is too far forward, or the child's head is thrown forward during a collision, or the child is unrestrained or out of position, an inflating front airbag can kill or seriously injure the child.

The side airbag also poses risks. If any part of a larger child's body is in the path of a deploying airbag, the child could receive possibly serious injuries.

Of course, children vary widely. And while age may be one indicator of when a child can safely ride in the front, there are other important factors you should consider.

Protecting Children

Physical Size
Physically, a child must be large enough for the lap/shoulder belt to properly fit over the hips, chest, and shoulder (see pages 17 and 42). If the seat belt does not fit properly, the child should not sit in the front.

Maturity
To safely ride in front, a child must be able to follow the rules, including sitting properly and wearing the seat belt properly throughout a ride.

If you decide that a child can safely ride up front, be sure to:

- Carefully read the owner's manual and make sure you understand all seat belt instructions and all safety information.
- Move the vehicle seat to the rear-most position.
- Have the child sit up straight, back against the seat, and feet on or near the floor.
- Check that the child's seat belt is properly positioned and secured.
- Supervise the child. Even mature children sometimes need to be reminded to fasten the seat belts or sit properly.

Using Child Seats with Tethers

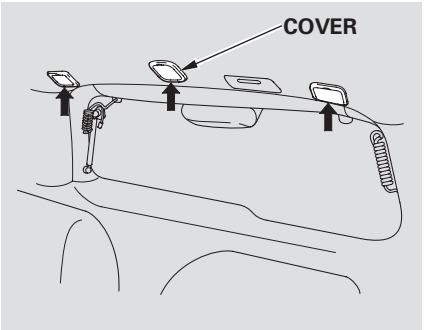

Your vehicle has three tether anchorage points on the ceiling near the tailgate opening for securing a tether-style child seat to the vehicle.

Since a tether can provide additional security, we recommend using a tether whenever one is required or available.

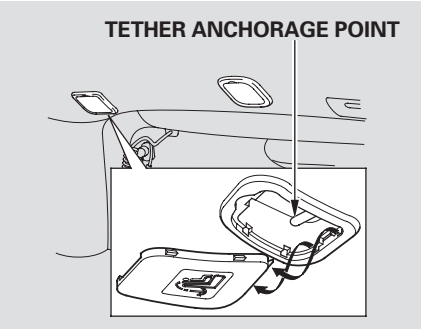

The tether anchorage points are located under plastic covers. Select the anchorage point you want to use, and remove the cover with a small flat-tipped screwdriver or fingernail file.

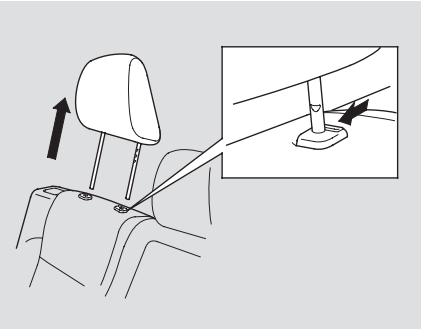

Remove the head restraint where you want to place the child seat.

You can remove the head restraint in each outside position by pressing the release button. The head restraint in the center position can be removed by pulling it up (see page 99).

Make sure the removed head restraints are secured in the cargo area. Reinstall the head restraints when the child seat is removed.

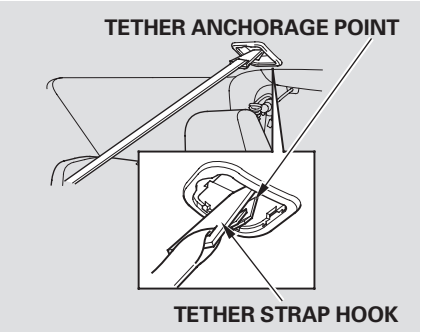

Attach the tether strap hook to the tether anchorage point as shown in the illustration, then tighten the strap according to the child seat maker's instructions. Make sure the strap is not twisted.

Using LATCH

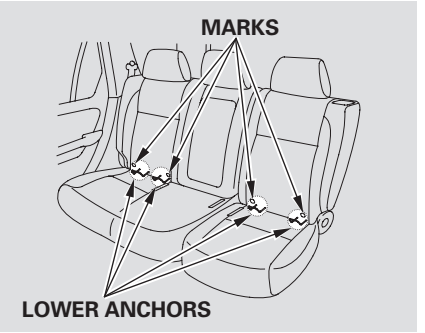

Your vehicle is equipped with LATCH (Lower Anchors and Tethers for Children) at the outer rear seats. The lower anchors are located between the seat-back and seat bottom and are to be used only with a child seat designed for use with LATCH.

The exact location of each lower anchor is marked with a small circle above the lower anchor point.

CONTINUED

Protecting Children

To install a LATCH-compatible child seat:

1. Store the seat belt buckle in the pocket in the seat cushion and move the center seat belt away from the lower anchors.

2. Make sure there are no foreign objects around the anchors. Foreign objects could get in the way of a secure connection between the child seat and the anchors.

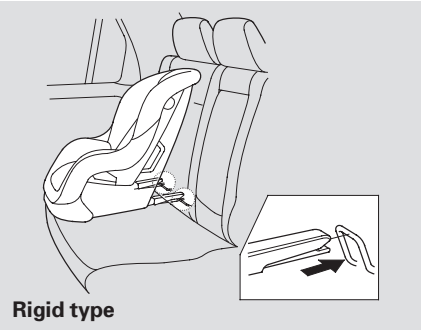

3. Put the child seat in the rear left or right vehicle seat and attach the child seat to the lower anchors according to the child seat maker's instructions.

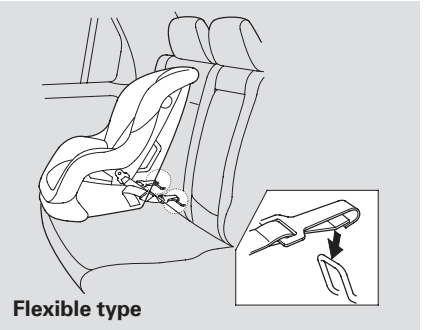

4. Follow the child seat maker's instructions for any additional advice on adjusting or tightening the fit.

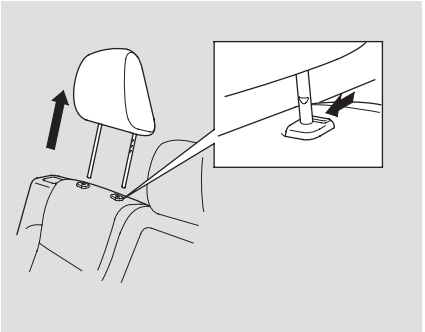

5. Remove the head restraint (see page 99).

Make sure the removed head restraints are secured in the cargo area. Reinstall the head restraints when the child seat is removed.

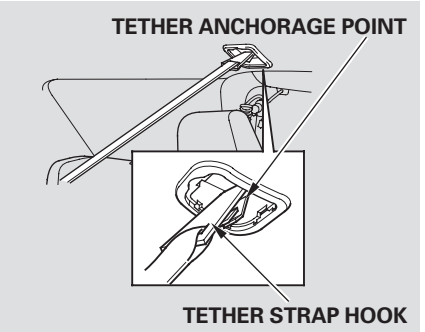

6. Attach the tether strap hook to the tether anchorage point, and tighten the strap according to the child seat maker's instructions. Make sure the strap is not twisted.

7. Push and pull the child seat forward and from side to side to verify that it is secure enough to stay upright during normal driving maneuvers.

Lower Universal Anchorage System Symbol

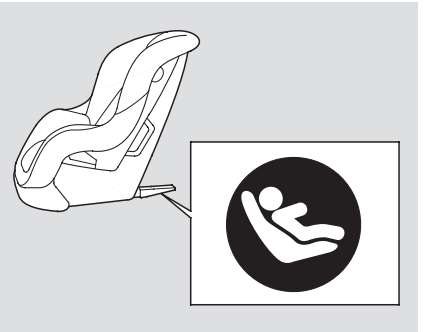

This symbol on rear or forward facing child seats or booster cushions indicates the presence of LATCH compatible hardware.

Additional Information About Your Seat Belts

Seat Belt System Components
Your seat belt system includes lap/shoulder belts in all five seating positions. The front seat belts are also equipped with automatic seat belt tensioners.

The seat belt system also includes a light on the instrument panel to remind you and your passengers to fasten your belts. If the driver's seat belt is not fastened before the ignition is turned ON (II), the light will come on and a beeper will also sound. The beeper will stop after a few seconds, but the light will stay on until the driver's seat belt is fastened.

Lap/Shoulder Belt

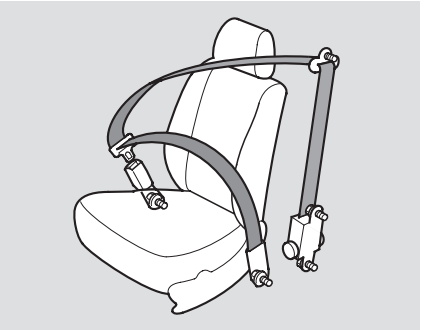

The lap/shoulder belt goes over your shoulder, across your chest, and across your hips.

To fasten the belt, insert the latch plate into the buckle, then tug on the belt to make sure the buckle is latched.

To unlock the belt, push the red PRESS button on the buckle. Guide the belt across your body to the door pillar. After exiting the vehicle, be sure the belt is out of the way and will not get closed in the door.

All seat belts have an emergency locking retractor. In normal driving, the retractor lets you move freely in your seat while it keeps some tension on the belt. During a collision or sudden stop, the retractor automatically locks the belt to help restrain your body.

Additional Information About Your Seat Belts

The seat belts in all seating positions except the driver's have an additional locking mechanism that must be activated to secure a child seat. (See pages 35 and 39 for instructions on how to secure child seats with this type of seat belt.)

If the shoulder part of the belt is pulled all the way out, the locking mechanism will activate. The belt will retract, but it will not allow the passenger to move freely.

To deactivate the locking mechanism, unlatch the buckle and let the seat belt fully retract. To refasten the belt, pull it out only as far as needed.

See page 17 for instructions on how to wear the lap/shoulder belt properly.

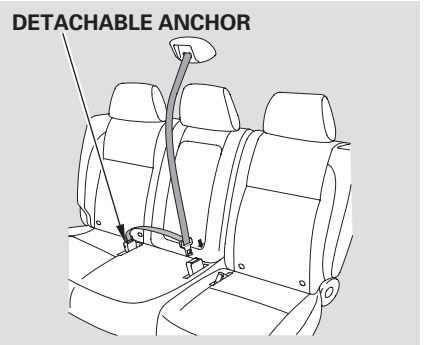

The lap/shoulder belt in the center seating position on the rear seat is equipped with a detachable anchor that has two parts: a small latch plate and an anchor buckle.

The detachable anchor should normaly be latched whenever the seat-backs are in an upright position. For more information about the detachable anchor (see page 108).

Additional Information About Your Seat Belts

Automatic Seat Belt Tensioners

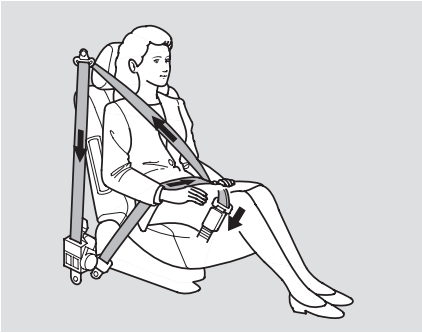

For added protection, the front seat belts are equipped with automatic seat belt tensioners. When activated, the tensioners immediately tighten the belts to help hold the driver and a front passenger in place.

The tensioners are designed to activate primarily in frontal collisions. The tensioners are independent of the airbag system, so they can be activated during a collision that might not cause the airbags to deploy. In this case, the airbags would not be needed but the additional seat belt tension can be helpful.

The tensioners will be activated in a collision severe enough to cause the front airbags to inflate.

When the tensioners are activated, the seat belts will remain tight until they are unbuckled in the normal way.

SRS The SRS indicator light will come on if there is a problem with your automatic seat belt tensioners (see page 57).

Additional Information About Your Seat Belts

Seat Belt Maintenance
For safety, you should check the condition of your seat belts regularly.

Pull each belt out fully and look for frays, cuts, burns, and wear. Check that the latches work smoothly and that the lap/shoulder belts retract easily. Any belt not in good condition or not working properly will not provide good protection and should be replaced as soon as possible.

U.S. Models
Honda provides a lifetime warranty on seat belts. Honda will repair or replace any seat belt component that fails to function properly during normal use. Please see your *Honda Warranty Information* booklet for details.

⚠ WARNING

Not checking or maintaining seat belts can result in serious injury or death if the seat belts do not work properly when needed.

Check your seat belts regularly and have any problem corrected as soon as possible.

If a seat belt is worn during a crash, it must be replaced by the dealer. A belt that has been worn during a crash may not provide the same level of protection in a subsequent crash. The dealer should also inspect the anchors for damage and replace them if needed.

Automatic seat belt tensioners that deployed during a crash must be replaced.

For information on how to clean your seat belts, see page 302 .

Additional Information About Your Airbags

SRS Components

Your Supplemental Restraint System (SRS) includes:

- Two front airbags. The driver's airbag is stored in the center of the steering wheel; the front passenger's airbag is stored in the dashboard. Both are marked "SRS AIRBAG."
- Automatic seat belt tensioners (see page 52).
- Sensors that can detect a moderate to severe frontal collision.
- A sophisticated electronic system that continually monitors and records information about the sensors, the control unit, the airbag activators, and driver and passenger seat belt use when the ignition is ON (II).
- An indicator light on the instrument panel that alerts you to a possible problem with the system (see page 57).
- Emergency backup power in case your vehicle's electrical system is disconnected in a crash.

How Your Front Airbags Work

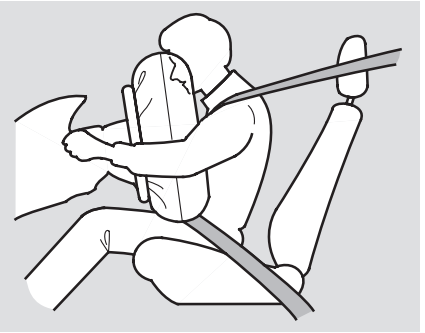

If you ever have a moderate to severe frontal collision, the sensors will detect the vehicle's rapid deceleration If the rate of deceleration is high enough, the control unit will instantly inflate the front airbags and activate the automatic seat belt tensioners.

Additional Information About Your Airbags

During a frontal crash, your seat belts help restrain your lower body and torso. Your airbag provides a cushion to help restrain and protect your head and chest.

Since both airbags use the same sensors, both airbags normally inflate at the same time. However, it is possible for only one airbag to inflate.

This can occur when the severity of a collision is at the margin, or threshold, that determines whether or not the airbags will deploy. In such cases, the seat belt will provide sufficient protection, and the supplemental protection offered by the airbag would be minimal.

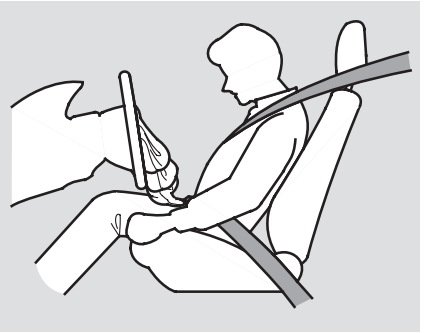

After inflating, the front airbags immediately deflate, so they won't interfere with the driver's visibility, or the ability to steer or operate other controls.

The total time for inflation and deflation is approximately one-tenth of a second, so fast that most occupants are not aware that the airbags deployed until they see them lying in their laps.

After a crash, you may see what looks like smoke. This is actually powder from the airbag's surface. Although the powder is not harmful, people with respiratory problems may experience some temporary discomfort. If this occurs, get out of the vehicle as soon as it is safe to do so.

U.S. Owners
For additional information on how your airbags work, see the booklet titled *SRS: What You Need to Know About Airbags* that came with your owner's manual.

Canadian Owners
For additional information on how your airbags work, ask your dealer for a copy of the booklet titled *SRS: What You Need to Know About Airbags*.

Additional Information About Your Airbags

How Your Side Airbags Work

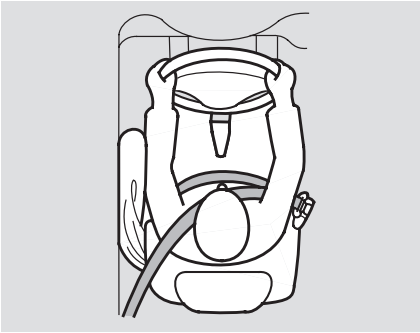

Standard on EX model in the U.S., and EX and EX-L models in Canada
Your vehicle is equipped with side airbags for the driver and a front seat passenger. The airbags are stored in the outer edges of the front seat-backs, and both are marked "SIDE AIRBAG."

If you ever have a moderate to severe side impact, the sensors will detect rapid deceleration and signal the control unit to instantly inflate either the driver's or the passenger's side airbag.

Only one airbag will deploy during a side impact. If the impact is on the passenger's side, the passenger's side airbag will deploy even if there is no passenger.

To get the best protection from the side airbags, front seat occupants should wear their seat belts and sit upright and well back in their seats.

How the SRS Indicator Light Works

SRS

The SRS indicator light alerts you to a potential problem with your front airbags and automatic seat belt tensioners.

On models with side airbags, this light will also alert you to a potential problem with your side airbags or passenger's side airbag automatic cutoff system (see page 58).

When you turn the ignition ON (II), this indicator will light briefly then go out. This tells you that the system is working properly.

If the light comes on at any other time, or does not come on at all, you should have the system checked by your dealer. For example:

- If the SRS indicator light does not come on after you turn the ignition switch to ON (II).
- If the light stays on after the engine starts.
- If the light comes on or flashes on and off while you drive.

If you see any of these indications, your front or side airbags may not deploy, your passenger's side airbag automatic cutoff system may not work properly, or your seat belt tensioners may not work when you need them. See your Honda dealer as soon as possible.

⚠ WARNING

Ignoring the SRS indicator light can result in serious injury or death if the airbags, cutoff system, or tensioners do not work properly.

Have your vehicle checked by a dealer as soon as possible if the SRS light alerts you to a potential problem.

Additional Information About Your Airbags

How the Side Airbag Cutoff Indicator Light Works

Only on models equipped with side airbags

SIDE AIRBAG OFF This light alerts you that the passenger's side airbag has been automatically shut off.

It does not mean there is a problem with your side airbags. It means that the side airbag cutoff system has activated to prevent the side airbag from deploying.

To reduce the risk of injury from an inflating side airbag, your vehicle has an automatic cutoff system for the passenger's side airbag.

Although Honda does not encourage children to ride in the front, this system is designed to shut off the side airbag if a child leans sideways and the child's head is in the side airbag deployment path.

If a small-statured adult leans sideways, or larger adult slouches and leans sideways into the deployment path of the side airbag, the system may also shut off the side airbag.

If the side airbag cutoff indicator light comes on, you should have the passenger sit upright. Once the passenger is out of the deployment path of the side airbag, the system will turn the airbag back on and the light will go out.

A front seat passenger should not use a cushion or other object as a backrest. It may prevent the cutoff system from working properly.

When you turn the ignition switch to ON (II), the indicator should light briefly and go out (see page 67). If it doesn't light, stays on, or comes on while driving without a passenger in the front seat, have the system checked.

Additional Information About Your Airbags

Airbag Service

Your front and side airbag systems (if equipped) are virtually maintenance-free, and there are no parts you can safely service. However, you must have your vehicle serviced if:

- ***Your airbags ever inflate.*** Any airbag that has deployed must be replaced along with the control unit, automatic seat belt tensioners, and other related parts. Do not try to remove or replace any airbag by yourself. This must be done by a Honda dealer or a knowledgeable body shop.

- ***The SRS indicator light alerts you to a problem.*** Take your vehicle to an authorized Honda dealer as soon as possible. If you ignore this indication, the airbags might not inflate when you need them.

Additional Safety Precautions

- ***Do not attempt to deactivate your airbags.*** Together, airbags and seat belts provide the best protection.

- ***Do not tamper with airbag components or wiring for any reason.*** Tampering could cause the airbags to deploy, possibly causing very serious injury.

- ***Do not expose the front seat-backs to water.*** If rain or spilled water soaks into a seat-back, it can prevent the side airbag system from working properly.

- ***Do not cover or replace front seat-back covers without consulting a Honda dealer.*** Improperly replacing or covering front seat-back covers can prevent your side airbags from inflating during a collision.

See page 192 for further information and precautions relating to your airbags.

Carbon Monoxide Hazard

Your vehicle's exhaust contains carbon monoxide gas. You should have no problem with carbon monoxide entering the vehicle in normal driving if you maintain your vehicle properly.

Have the exhaust system inspected for leaks whenever:

- The vehicle is raised for an oil change.
- You notice a change in the sound of the exhaust.
- The vehicle was in an accident that may have damaged the underside.

⚠ WARNING

Carbon monoxide gas is toxic. Breathing it can cause unconsciousness and even kill you.

Avoid any enclosed areas or activities that expose you to carbon monoxide.

High levels of carbon monoxide can collect rapidly in enclosed areas, such as a garage. Do not run the engine with the garage door closed. Even with the door open, run the engine only long enough to move the vehicle out of the garage.

With the tailgate/hatch glass open, air flow can pull exhaust gas into your vehicle's interior and create a hazardous condition. If you must drive with the tailgate/hatch glass open, open all the windows and set the heating and cooling system as shown below.

If you must sit in your parked vehicle, even in an unconfined area, with the engine running, adjust the heating and cooling system as follows:

1. Select the Fresh Air mode.
2. Select the mode.
3. Turn the fan on high speed.
4. Set the temperature control to a comfortable setting.

These labels are in the locations shown. They warn you of potential hazards that could cause serious injury. Read these labels carefully.

If a label comes off or becomes hard to read, contact your Honda dealer for a replacement.

DASHBOARD

U.S. models only

WARNING

Children Can Be KILLED or INJURED by Passenger Air Bag

- The back seat is the safest place for children 12 and under.
- Make sure all children use seat belts or child seats.

To be removed by owner only.

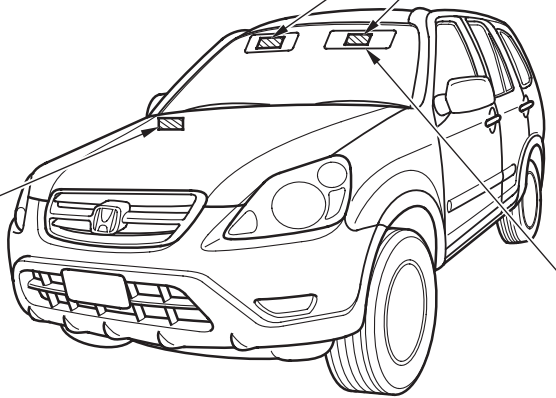

SUN VISOR

U.S. models

WARNING

DEATH or SERIOUS INJURY can occur

- Children 12 and under can be killed by the air bag
- The BACK SEAT is the SAFEST place for children
- NEVER put a rear-facing child seat in the front
- Sit as far back as possible from the air bag
- ALWAYS use SEAT BELTS and CHILD RESTRAINTS

Canadian models

CAUTION
TO AVOID SERIOUS INJURY:
- FOR MAXIMUM SAFETY PROTECTION IN A CRASH, ALWAYS USE YOUR SEAT BELT AND PROPER CHILD RESTRAINT.
- DO NOT INSTALL REARWARD-FACING CHILD SEATS IN ANY FRONT PASSENGER SEAT POSITION.
- DO NOT SET OR LEAN UNNECESSARILY CLOSE TO THE AIR BAG.
- DO NOT PLACE ANY OBJECTS OVER THE AIR BAG OR BETWEEN THE AIR BAG AND YOU PURSE.
- SEE THE OWNER'S MANUAL FOR FURTHER INFORMATION AND EXPLANATIONS.

PRECAUTIONS:
POUR ÉVITER DES BLESSURES GRAVES:
- POUR PROTÉGER À UNE PROTECTION MAXIMALE EN CAS DE COLLISION, BOUCLEZ VOUS À VOTRE SIÈGE.
- N'INSTALLEZ JAMAIS UN SIÈGE POUR ENFANTS FAISANT FACE À L'ARRIÈRE SUR LE SIÈGE DU PASSAGER AVANT.
- NE VOUS APPUYEZ PAS ET NE VOUS ASSOYEZ PAS PRÈS DU COUSSIN GONFLABLE.
- NE DÉPOSEZ AUCUN OBJET SUR LE COUSSIN GONFLABLE OU ENTRE LE COUSSIN GONFLABLE ET VOUS.
- LISEZ LE GUIDE D'UTILISATEUR POUR DE PLUS AMPLES RENSEIGNEMENTS.

SUN VISOR

U.S. models only

WARNING: HIGHER ROLLOVER RISK

Avoid Abrupt Maneuvers and Excessive Speed.

Always Buckle Up.

See Owner's Manual For Further Information.

CONTINUED

Safety Labels

HOOD

On models without side airbags

⚠WARNING

The airbag inflator is explosive and, if accidentally deployed, can seriously hurt you.
Follow Service Manual instructions carefully.

⚠ATTENTION

Le gonfleur SRS est explosible, et s'il se déploie accidentellement, il risque de provoquer des blessures graves ou de tuer.
Suivre attentivement les instructions du manuel d'entretien.

On models with side airbags

⚠WARNING

Accidental deployment can seriously hurt or kill you.
Follow Service Manual instructions carefully.

⚠ATTENTION

Un déploiement accidentel risque de causer de graves blessures, voire mort.
Suivre attentivement les instructions du manuel de réparation.

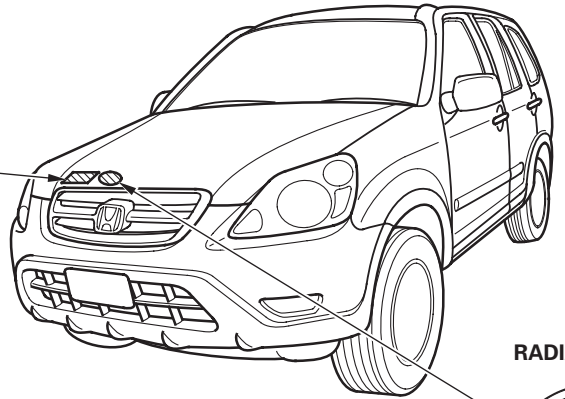

RADIATOR CAP

Instruments and Controls

This section gives information about the controls and displays that contribute to the daily operation of your Honda. All the essential controls are within easy reach.

Control Locations 64
Indicator Lights..... 65
Gauges 72
Speedometer 72
Tachometer 72
Odometer/Trip Meter 73
Outside Temperature Indicator 73
Fuel Gauge 74
Temperature Gauge 74
Controls Near the Steering Wheel 75
Headlights 76
Daytime Running Lights..... 77
Instrument Panel Brightness 77
Turn Signals 77
Windshield Wipers 78
Windshield Washers 79
Rear Window Wiper and Washer..... 80
Hazard Warning..... 81
Rear Window Defogger 81
Parking Brake 82
Steering Wheel Adjustment 83
Keys and Locks..... 84
Keys..... 84
Immobilizer System..... 85
Ignition Switch 86
Power Door Locks..... 88
Remote Transmitter..... 89
Childproof Door Locks 93
Tailgate 93
Glove Box 96
Seats 97
Front Seat Adjustments 97
Driver's Seat Height Adjustment 98
Front Seat Armrests..... 98
Head Restraints 99
Rear Seat Adjustments 100
Rear Seat Armrest..... 101
Reclining the Front Seats 102
Folding the Rear Seats..... 104
Detachable Anchor..... 108
Seat Heaters 109
Power Windows 110
Moonroof 113
Mirrors 114
Adjusting the Power Mirrors ... 114
Center Table..... 115
Beverage Holders 116
Built-in Table 117
Center Pocket 119
Storage Box 119
Driver's Pocket 120
Coin Tray 120
Sunglasses Holder 121
Accessory Power Sockets..... 122
Dashboard Pocket 123
Interior Lights 124
Ceiling Light..... 124
Spotlights..... 124
Cargo Area Light 125
Ignition Switch Light..... 125

Control Locations

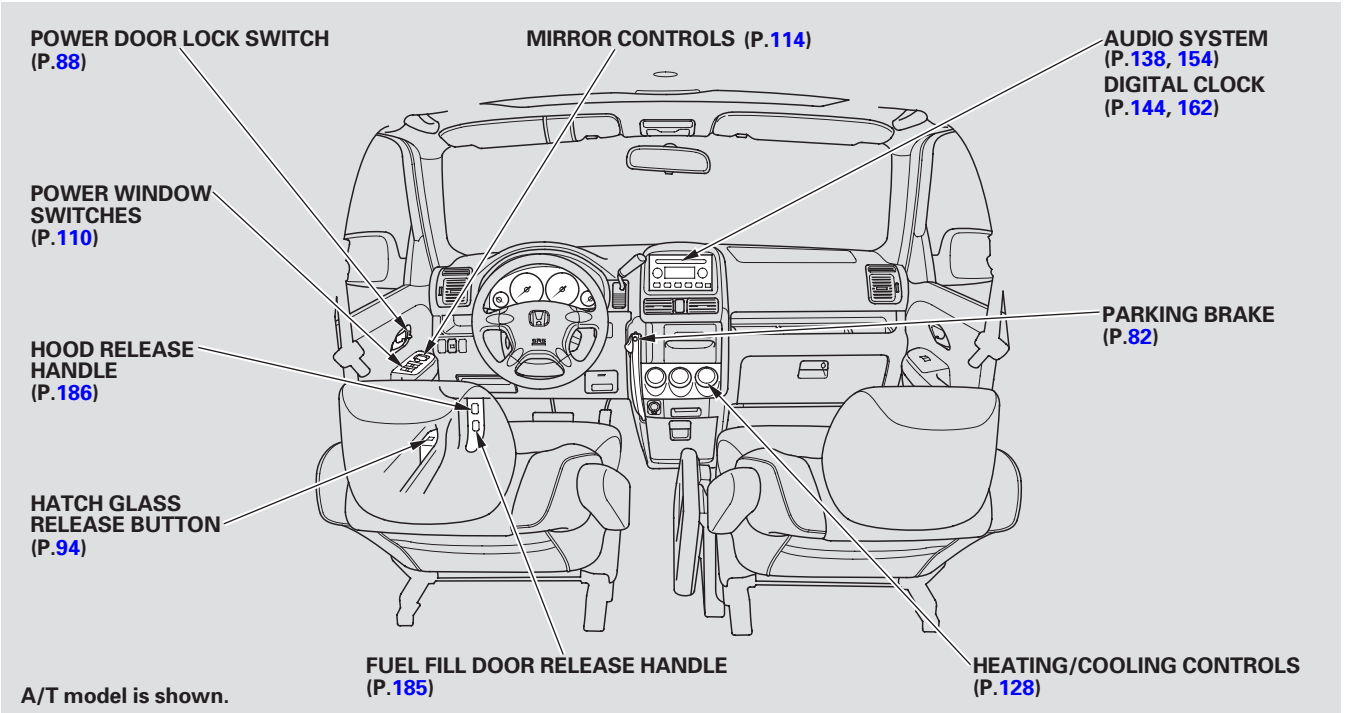

A/T model is shown.

Indicator Lights

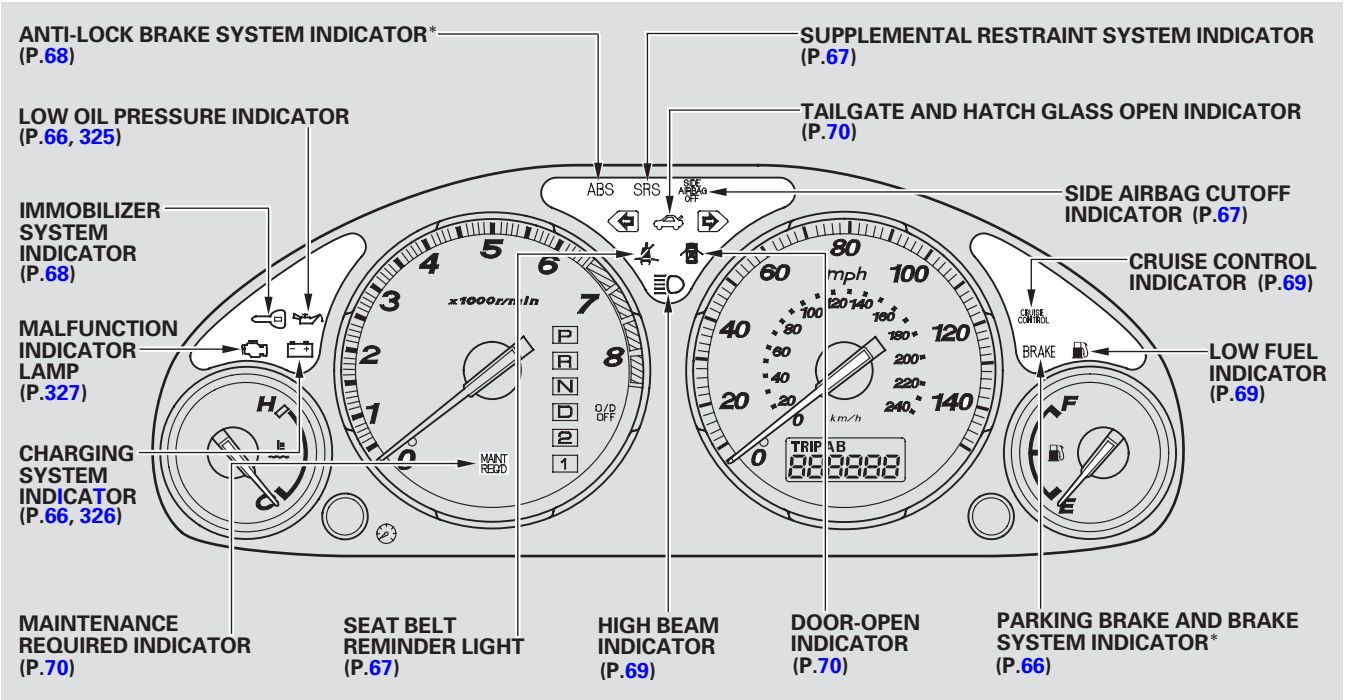

* The U.S. instrument panel is shown. Differences for the Canadian models are noted in the text.

Indicator Lights

The instrument panel has many indicators to give you important information about your vehicle.

Malfunction Indicator Lamp

See page 327 .

Low Oil Pressure Indicator

The engine can be severely damaged if this light flashes or stays on when the engine is running. For complete information, see page 325 .

Charging System Indicator

If this light comes on when the engine is running, the battery is not being charged. For complete information, see page 326 .

U.S. Canada

Parking Brake and Brake System Indicator

This light has two functions:

1. This indicator comes on when you turn the ignition switch ON (II). It is a reminder to check the parking brake. Driving with the parking brake not fully released can damage the brakes and tires.

2. If the indicator remains lit after you have fully released the parking brake while the engine is running, or if it comes on while driving, it can indicate a problem in the brake system. For complete information, see page 329 .

Indicator Lights

Seat Belt Reminder Light

This indicator lights when you turn the ignition switch ON (II). It is a reminder to you and your passengers to protect yourselves by fastening the seat belts. A beeper also sounds if you have not fastened your seat belt.

If you do not fasten your seat belt, the beeper will stop after a few seconds but the light stays on until you do. Both the light and the beeper stay off if you fasten your seat belt before turning on the ignition.

SRS Supplemental Restraint System Indicator

This indicator lights when you turn the ignition switch ON (II). If it comes on at any other time, it indicates a potential problem with your front airbags or automatic seat belt tensioners. On models equipped with side airbags, this light will also alert you to a potential problem with your side airbags or passenger's side airbag automatic cutoff system. For complete information, see page 57.

SIDE AIRBAG OFF Side Airbag Cutoff Indicator

Only on models equipped with side airbags

This indicator lights when you turn the ignition switch ON (II). If it comes on at any other time, it indicates that the passenger's side airbag has automatically shut off. For complete information, see page 58.

Indicator Lights

U.S.

Anti-lock Brake System (ABS) Indicator

Only on models equipped with ABS (see page 212)

This light normally comes on for a few seconds when you turn the ignition switch ON (II), and when the ignition switch is turned to START (III). If this light comes on at any other time, there is a problem in the ABS. If this happens, take the vehicle to your dealer to have it checked. With the light on, your vehicle still has normal braking ability but no anti-lock. For complete information, see page 214 .

Immobilizer System Indicator

This indicator comes on for a few seconds when you turn the ignition switch ON (II). It will then go off if you have inserted a properly-coded ignition key. If it is not a properly-coded key, the indicator will blink and the engine will not start (see page 85).

This indicator also blinks several times when you turn the ignition switch from ON (II) to ACCESSORY (I) or LOCK (0).

Turn Signal and Hazard Warning Indicators

The left or right turn signal light blinks when you signal a lane change or turn. If the light does not blink or blinks rapidly, it usually means one of the turn signal bulbs is burned out (see page 288). Replace the bulb as soon as possible, since other drivers cannot see that you are signaling.

When you turn on the Hazard Warning switch, both turn signal lights blink. All turn signals on the outside of the vehicle should flash.

Indicator Lights

"Daytime Running Lights" Indicator

Canadian models only

This indicator lights when you turn the ignition switch to ON (II) with the headlight switch off and the parking brake set. It should go off if you turn on the headlights or release the parking brake. If it comes on at any other time, it means there is a problem with the DRL. There may also be a problem with the high beam headlights.

Cruise Control Indicator

This lights when you set the cruise control. See page 179 for information on operating the cruise control.

High Beam Indicator

This light comes on with the high beam headlights. See page 76 for information on the headlight controls.

On Canadian models, this indicator comes on with reduced brightness when the Daytime Running Lights (DRL) are on (see page 77).

Low Fuel Indicator

This light comes on as a reminder that you must refuel soon.

Washer Level Indicator

Canadian models only

This light comes on when the washer fluid level is low. Add washer fluid when you see this light come on (see page 258).

Indicator Lights

Tailgate and Hatch Glass Open Indicator

This light comes on if the tailgate or the hatch glass is not closed tightly.

Door-open Indicator

This light comes on if any door is not closed tightly.

Maintenance Required Indicator

This indicator reminds you that it is time to take your vehicle in for scheduled maintenance.
Refer to the Maintenance Schedules for Normal and Severe Driving Conditions on pages 238 – 242 .

For the first 8,000 miles (12,800 km) after the Maintenance Required Indicator is reset, it will come on for two seconds when you turn the ignition switch to ON (II).

Between 8,000 miles (12,800 km) and 10,000 miles (16,000 km) this indicator will light for two seconds when you first turn the ignition switch to ON (II), and then flash for ten seconds.

If you exceed 10,000 miles (16,000 km) without having the scheduled maintenance performed, this indicator will remain on as a constant reminder.

Indicator Lights

Your dealer will reset this indicator after completing the scheduled maintenance. If this maintenance is done by someone other than your Honda dealer, reset the indicator as follows.

1. Turn off the engine.

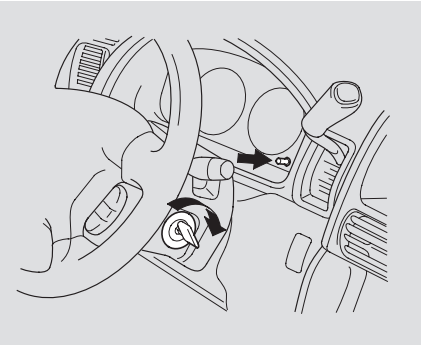

2. Press and hold the Select/Reset button on the instrument panel, then turn the ignition switch ON (II).

3. Hold the button until the indicator resets (approximately ten seconds).

Gauges

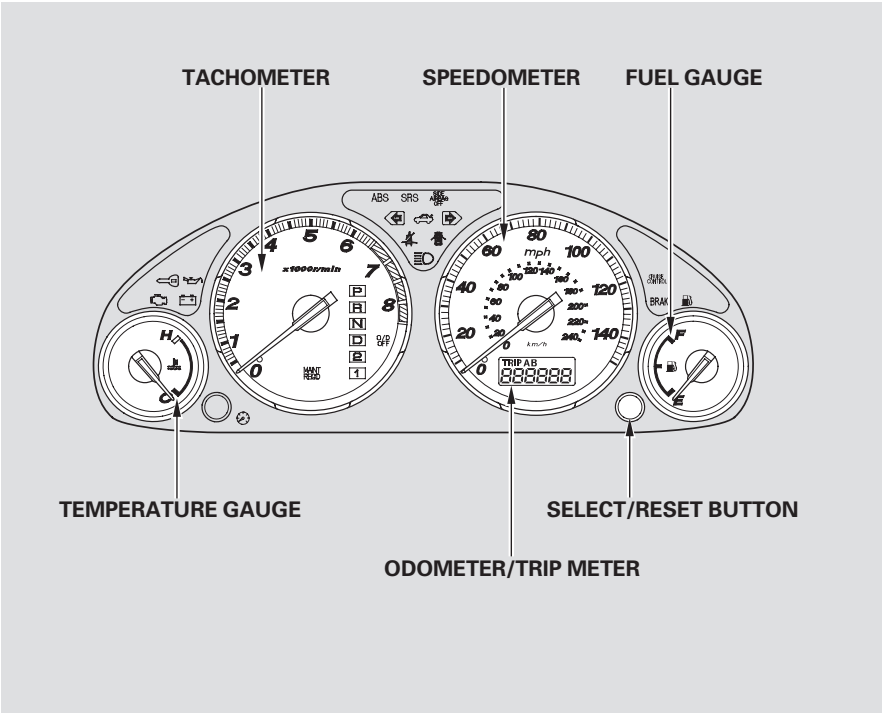

Speedometer

U.S. models

This shows your speed in miles per hour (mph). The smaller inner numbers are the speed in kilometers per hour (km/h).

Canadian models

This shows your speed in kilometers per hour (km/h). The smaller inner numbers are the speed in miles per hour (mph).

Tachometer

The tachometer shows the engine speed in revolutions per minute (rpm). To protect the engine from damage, never drive with the tachometer needle in the red zone.

Odometer/Trip Meter
The odometer shows the total distance your vehicle has been driven. It measures miles in U.S. models and kilometers in Canadian models.
It is illegal under U.S. federal law and Canadian provincial regulations to disconnect, reset, or alter the odometer with the intent to change the number of miles or kilometers indicated.

The trip meter shows the number of miles (U.S.) or kilometers (Canada) driven since you last reset it. There are two trip meters: Trip A and Trip B. Switch between these displays and the odometer by pressing the Select/Reset button repeatedly. Each trip meter works independently, so you can keep track of two different distances.

To reset a trip meter, display it, and then press and hold the Select/Reset button until the number resets to "0.0".

Outside Temperature Indicator

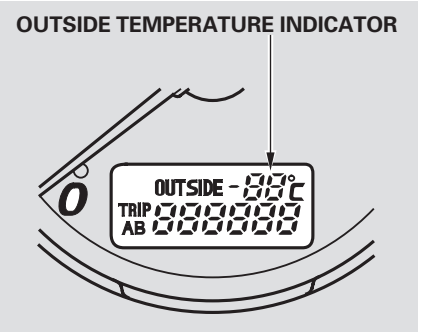

Canadian models only
This indicator displays the outside temperature in Centigrade.

CONTINUED

Gauges

The temperature sensor is located in the front bumper. Therefore, the temperature reading can be affected by heat reflection from the road surface, engine heat, and the exhaust from the surrounding traffic. This can cause the temperature reading not to be correct when your speed is under 19 mph (30 km/h).

When the outside temperature goes down below 37°F (3°C) the first time, the temperature reading blinks about ten times to show you the outside temperature is low. In certain weather conditions, temperature readings near freezing 32°F (0°C) could mean that ice is forming on the road surface.

Fuel Gauge

This shows how much fuel you have. It is most accurate when the vehicle is on level ground. It may show slightly more or less than the actual amount when you are driving on curvy or hilly roads.

The needle returns to the bottom after you turn off the ignition. The gauge shows the fuel level reading immediately after you turn the ignition switch back ON (II).

NOTICE

Avoid driving with an extremely low fuel level. Running out of fuel could cause the engine to misfire, damaging the catalytic converter.

Temperature Gauge

This shows the temperature of the engine's coolant. During normal operation, the pointer should rise from the bottom white mark to about the middle of the gauge. In severe driving conditions, such as very hot weather or a long period of uphill driving, the pointer may rise to the upper white zone. If it reaches the red (Hot) mark, pull safely to the side of the road. Turn to page 323 for instructions and precautions on checking the engine's cooling system.

Controls Near the Steering Wheel

The two levers on the steering column contain controls for driving features you use most often. The left lever controls the turn signals, headlights, and high beams. The right lever controls the windshield washers and wipers.

The hazard warning lights switch is on the dashboard between the center air vents.

The controls under the left air vent are for the moonroof and the cruise control.

The tilt adjustment lever on the underside of the steering column allows you to tilt the steering wheel.

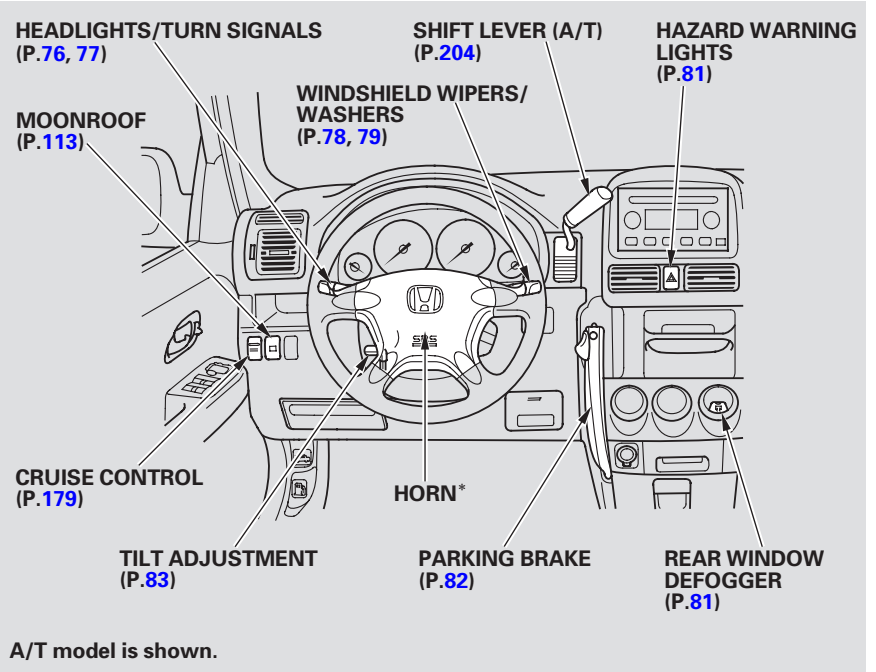

A/T model is shown.

*: To use the horn, press the center pad of the steering wheel.

Controls Near the Steering Wheel

Headlights

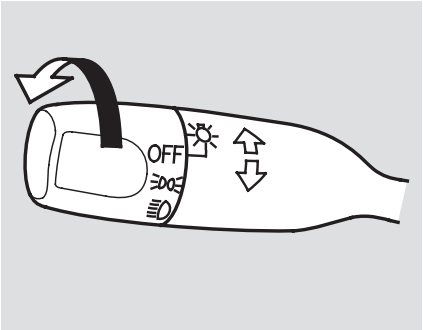

The rotating switch on the left lever controls the lights. Turning this switch to the " " position turns on the parking lights, taillights, instrument panel lights, side-marker lights, and rear license plate light. Turning the switch to the " " position turns on the headlights.

If you leave the lights on with the ignition switch in ACCESSORY (I) or LOCK (0), you will hear a reminder tone when you open the driver's door.

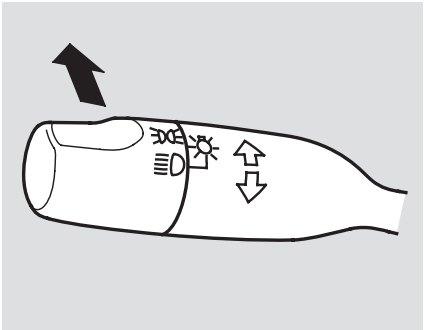

To change from low beams to high beams, push the turn signal lever forward until you hear a click. The blue high beam indicator will light (see page 69). To return to low beams, pull the turn signal lever back.

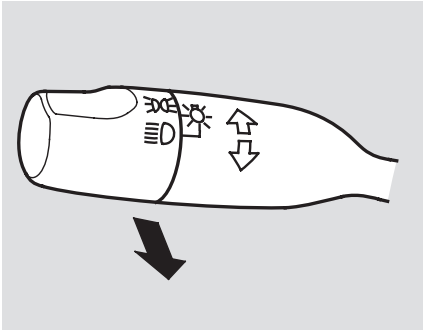

To flash the high beams, pull the turn signal lever back lightly, then release it. The high beams will come on and go off. The high beams will stay on for as long as you hold the lever back, no matter what position the headlight switch is in.

Daytime Running Lights

Canadian models only

With the headlight switch off, the high beam headlights come on with reduced brightness when you turn the ignition switch to ON (II) and release the parking brake. They remain on until you turn the ignition off, even if you set the parking brake.

The headlights revert to normal operation when you turn them on with the switch.

Instrument Panel Brightness

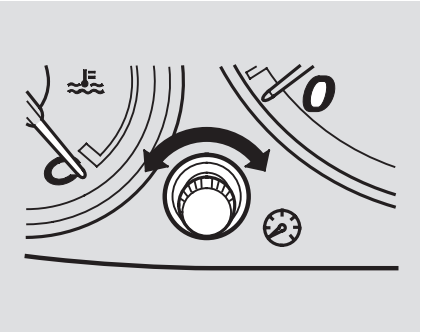

Turn the knob on the left side of the instrument panel to adjust the brightness of the instrument panel lights.

Turn Signals

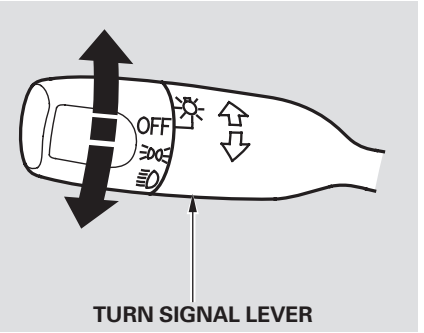

Signal a turn or lane change with this lever. Push down on the lever to signal a left turn, and up to signal a right turn. If you push it up or down all the way, the turn signal continues to blink even when you release the lever. It shuts off automatically as you complete the turn.

CONTINUED

Controls Near the Steering Wheel

To signal a lane change, push lightly on the turn signal lever in the proper direction and hold it. The lever will return to the center position as soon as you release it.

Windshield Wipers

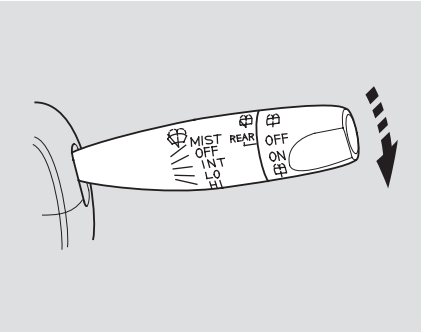

This lever controls the windshield wipers and washers. It has five positions:

MIST: mist
OFF: off
INT: intermittent
LO: low speed
HI: high speed

To select a position, push the lever up or down.

In intermittent, the wipers operate every few seconds. In low speed and high speed, the wipers run continuously.

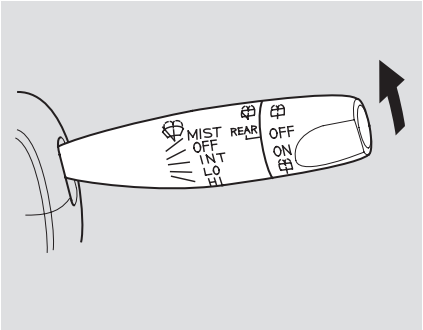

To operate the wipers in mist mode, push the control lever up from the OFF position. The wipers run at high speed until you release the lever. This gives you a quick way to clear the windshield.

Windshield Washers

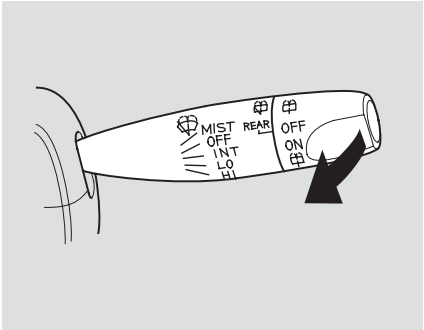

To clean the windshield, pull back on the wiper control lever. The washers spray until you release the lever.

The wipers run at low speed while you're pulling the lever, then complete one more sweep of the windshield after you release it.

Controls Near the Steering Wheel

Rear Window Wiper and Washer

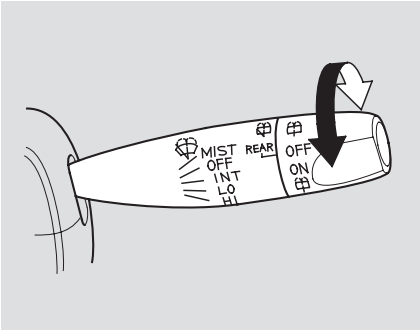

The rotating switch on the right lever controls the rear window wiper and washer.

To activate the rear windshield wiper, rotate the switch to “ON”. The wiper operates every seven seconds after completing two sweeps. When you turn the wiper switch to the “OFF” position or turn off the ignition switch, the wiper will return to its parked position.

To use the wiper and washer, rotate and hold the switch one position up from “ON”. The wiper opreates while you are holding the switch, then completes two more sweeps after you release it. To use the washer only, rotate and hold the switch one position down from “OFF”.

The rear wiper will not work if the hatch glass is not fully closed.

If you open the hatch glass while the rear wiper is operating, the wiper will stop immediately. To store it, rotate the wiper switch to the “OFF” position and close the hatch glass, then turn the wiper switch on and off again with the ignition switch on.

The rear window washer uses the same fluid reservoir as the windshield washer.

Controls Near the Steering Wheel

Hazard Warning

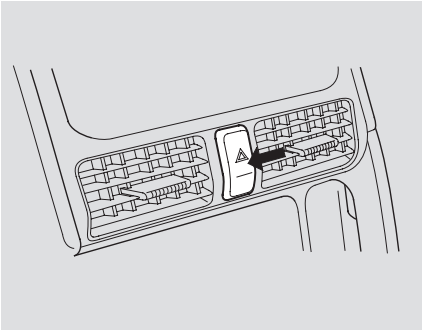

Push the button between the center air vents to turn on the hazard warning lights (four-way flashers). This causes all four outside turn signals and both indicators in the instrument panel to flash. Use the hazard warning lights if you need to park in a dangerous area near heavy traffic, or if your vehicle is disabled.

Rear Window Defogger

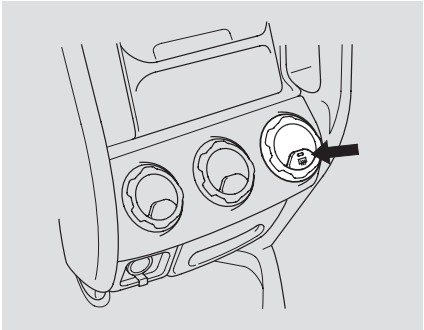

The rear window defogger will clear fog, frost, and thin ice from the window. Push the defogger button to turn it on and off. The light in the button lights to show the defogger is on.

Make sure the rear window is clear and you have good visibility before starting to drive.

The defogger wires on the inside of the rear window can be accidentally damaged. When cleaning the glass, always wipe side to side.

Controls Near the Steering Wheel

Parking Brake

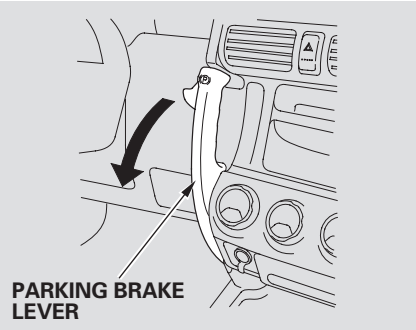

To apply the parking brake, firmly pull the parking brake lever toward you.

To release the parking brake, push and hold the release button on the side of the parking brake lever, pull the lever toward you slightly, then push the lever forward.

The parking brake light on the instrument panel should go out when the parking brake is fully released (see page 66).

NOTICE

Driving the vehicle with the parking brake applied can damage the rear brakes and axles.

Controls Near the Steering Wheel

Steering Wheel Adjustment

See page 20 for important safety information about how to properly position the steering wheel.

Make any steering wheel adjustment before you start driving.

⚠ WARNING

Adjusting the steering wheel position while driving may cause you to lose control of the vehicle and be seriously injured in a crash.

Adjust the steering wheel only when the vehicle is stopped.

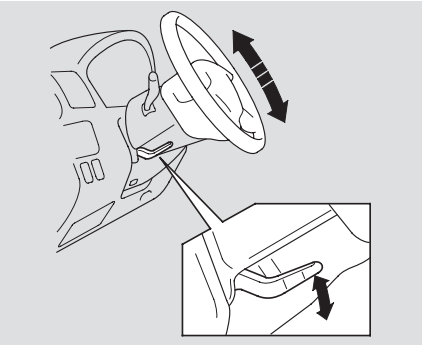

To adjust the steering wheel upward or downward:

1. Push the lever under the steering column all the way down.
2. Move the steering wheel to the desired position, making sure the wheel points toward your chest, not toward your face. Make sure you can see the instrument panel gauges and the indicator lights.
3. Push the lever up to lock the steering wheel in that position.
4. Make sure you have securely locked the steering wheel in place by trying to move it up and down.

Keys and Locks

Keys

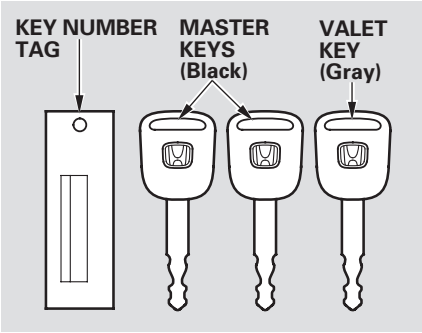

Your vehicle comes with two master keys and a valet key.
The master key fits all the locks on your vehicle:
- Ignition
- Doors
- Glove Box
- Tailgate

The valet key works only in the ignition, the door locks and the tailgate. You can keep the glove box locked when you leave your vehicle and the valet key at a parking facility.

You should have received a key number tag with your set of keys. You will need this key number if you ever have to get a lost key replaced. Keep the tag stored in a safe place. When replacing keys, use only Honda-approved key blanks.

These keys contain electronic circuits that are activated by the Immobilizer System. They will not work to start the engine if the circuits are damaged.

- Protect the keys from direct sunlight, high temperature, and high humidity.
- Do not drop the keys or set heavy objects on them.
- Keep the keys away from liquids. If they get wet, dry them immediately with a soft cloth.

The keys do not contain batteries. Do not try to take them apart.

Remote Transmitter
Some models also come with two remote transmitters; see page 89 for an explanation of their operation.

Immobilizer System
The Immobilizer System protects your vehicle from theft. A properly-coded master or valet key must be used in the ignition switch for the engine to start. If an improperly-coded key (or other device) is used, the engine's fuel system is disabled.

When you turn the ignition switch to ON (II), the Immobilizer System indicator should come on for a few seconds, then go out. If the indicator starts to blink, it means the system does not recognize the coding of the key. Turn the ignition switch to LOCK (0), remove the key, reinsert it, and turn the switch to ON (II) again.

The system may not recognize your key's coding if another immobilizer key or other metal object is near the ignition switch when you insert the key. To make sure the system recognizes the key code:

- Do not keep other immobilizer keys on the same key ring.
- Use a plastic or leather key fob, not metal.
- Keep other keys away from your vehicle's key and the ignition switch while trying to start the engine.

If the system repeatedly does not recognize the coding of your key, contact your Honda dealer.

CONTINUED

Keys and Locks

The Immobilizer System indicator will also blink several times when you turn the ignition switch from ON (II) to ACCESSORY (I) or LOCK (0).

Do not attempt to alter this system or add other devices to it. Electrical problems could result that may make your vehicle undriveable.

If you have lost your key and you cannot start the engine, contact your Honda dealer.

As required by the FCC:
This device complies with Part 15 of the FCC rules. Operation is subject to the following two conditions: (1) This device may not cause harmful interference, and (2) this device must accept any interference received, including interference that may cause undesired operation.

Changes or modifications not expressly approved by the party responsible for compliance could void the user's authority to operate the equipment.

This device complies with Industry Canada Standard RSS-210.
Operation is subject to the following two conditions: (1) this device may not cause interference, and (2) this device must accept any interference that may cause undesired operation of the device.

Ignition Switch

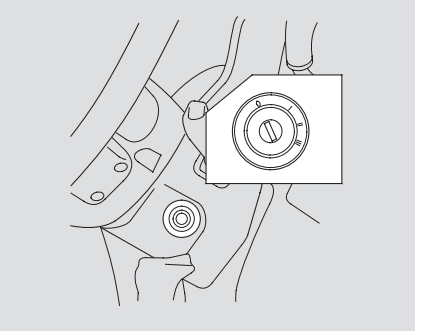

The ignition switch is on the right side of the steering column. It has four positions:
- LOCK (0)
- ACCESSORY (I)
- ON (II)
- START (III)

LOCK (0) — You can insert or remove the key only in this position. To switch from ACCESSORY to LOCK, you must push the key in slightly as you turn it. If your vehicle has an automatic transmission, the shift lever must also be in Park. The anti-theft lock will lock the steering column when you remove the key.

If the front wheels are turned, the anti-theft lock may sometimes make it difficult to turn the key from LOCK to ACCESSORY. Firmly turn the steering wheel to the left or to the right as you turn the key.

⚠ WARNING

Removing the key from the ignition switch while driving locks the steering. This can cause you to lose control.

Remove the key from the ignition switch only when parked.

ACCESSORY (I) — In this position, you can operate the audio system and the accessory power sockets.

ON (II) — This is the normal key position when driving. All features and accessories on the vehicle are usable. Several of the lights on the instrument panel come on as a test when you turn the ignition switch from ACCESSORY to ON.

START (III) — Use this position only to start the engine. The switch returns to ON (II) when you let go of the key.

The engine will not start if the Immobilizer System does not recognize the key's coding (see page 85).

You will hear a reminder beeper if you leave the key in the ignition switch in the LOCK (0) or ACCESSORY (I) position and open the driver's door. Remove the key to turn off the beeper.

Keys and Locks

Power Door Locks

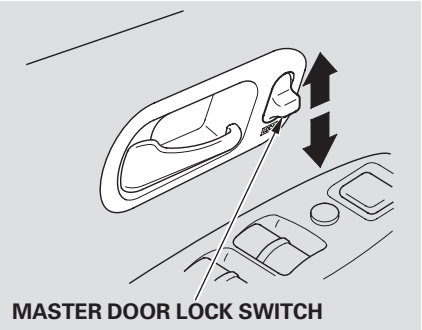

The master door lock switch on the driver's door locks and unlocks all of the doors and tailgate. Push the switch down to lock all of the doors and the tailgate, and up to unlock them.

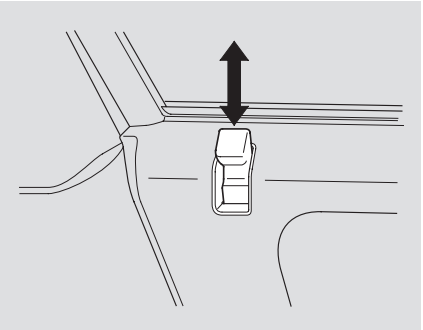

Each door has a lock tab at the top of the door. When you push down the lock tab on the driver's door, all doors and the tailgate lock. Pulling up the lock tab on the driver's door unlocks only that door. The lock tab on each passenger's door only locks and unlocks that door.

To lock any passenger's door when getting out the vehicle, push the lock tab down and close the door. To lock the driver's door, remove the key from the ignition switch, pull the outside door handle and push the lock tab down or push the master switch down. Release the handle, then close the door.

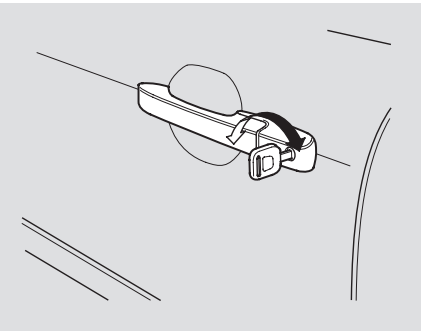

The front doors can be locked and unlocked from the outside with the key.

All doors and the tailgate lock when you push down the lock tab on the driver's door, or lock the driver's door from the outside with the key. Only the driver's door unlocks when you use the key or the lock tab. To unlock the passenger's doors, use the master door lock switch or the lock tab on each door.

Remote Transmitter

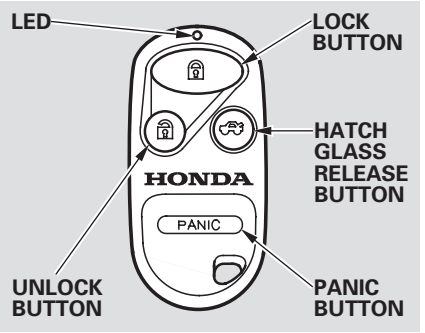

On EX model in the U.S., and EX and EX-L models in Canada
You can lock and unlock your vehicle with the remote transmitter. When you push the LOCK button, all doors and the tailgate lock. The front turn signals, parking lights, side marker lights, taillights, license plate light, and the instrument panel lights flash once.

When you push the LOCK button a second time within 5 seconds, the horn will sound once to verify that the doors and the tailgate are locked.

When you push the UNLOCK button once, only the driver's door unlocks. The remaining doors and the tailgate unlock when you push the button a second time. The front turn signals, parking lights, side marker lights, taillights, license plate light, and the instrument panel lights flash twice each time you push the button.

CONTINUED

The ceiling light (if the light switch is in the center position) will come on when you press the UNLOCK button. If you do not open any of the doors or the tailgate, the light will fade out in about 30 seconds, the doors and the tailgate automatically relock. If you relock the doors and the tailgate with the remote transmitter before 30 seconds have elapsed, the light will go off immediately.

You cannot lock the doors and the tailgate with the remote transmitter if any door or the tailgate is not fully closed. You cannot lock or unlock the doors and the tailgate with the key in the ignition switch.

To open the hatch glass, push the Hatch Glass Release button for about two seconds. The hatch glass will not open if the key is in the ignition switch.

Even if the hatch glass is opened, the tailgate can be locked with the remote transmitter. Make sure to check the hatch glass manually.

Panic Mode

Panic mode allows you to remotely activate your vehicle's horn and lights to attract attention. When activated, the horn will sound, and the headlights, parking lights, side marker lights, taillights and instrument panel lights will flash for about 30 seconds. To activate panic mode, press and hold the PANIC button for about one second.

To cancel Panic mode before 30 seconds, press any button on the remote transmitter. You can also turn the ignition switch to ON (II).

Panic mode will not activate if the ignition switch is in the ON (II) position.

Replacing the Battery
When the remote transmitter's battery begins to get weak, it may take several pushes on the button to lock or unlock the doors and tailgate, and the LED will not light. Replace the battery as soon as possible.

Battery type: CR2025

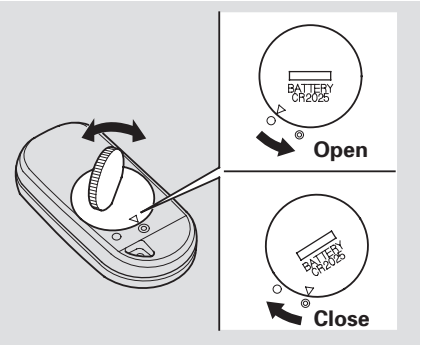

To replace the battery, remove the round cover on the back of the transmitter by turning it counterclockwise with a coin.

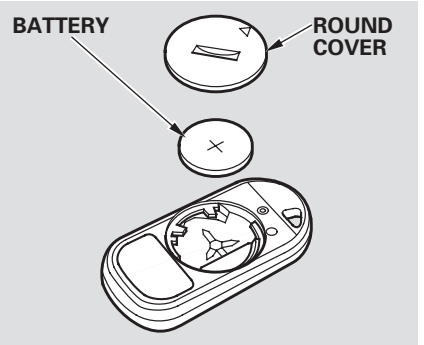

Remove the old battery and note the polarity. Make sure the polarity of the new battery is the same (+ side facing up), then insert it in the transmitter.

Align the ▽ mark on the cover with the ◎ mark on the transmitter, then set the cover in place and turn it clockwise.

CONTINUED

Transmitter Care
Avoid severe shock to the transmitter, such as dropping or throwing it. Also, protect it from extreme hot or cold temperatures.

Clean the transmitter case with a soft cloth. Do not use strong cleaners or solvents that could harm the case. Immersing the transmitter in any liquid will harm the transmitter and cause it to not function properly.

If you lose a transmitter, you will need to have the replacement programmed to your vehicle's system by your Honda dealer. Any other transmitters you have will also need to be reprogrammed.

As required by the FCC:
This device complies with Part 15 of the FCC rules. Operation is subject to the following two conditions: (1) This device may not cause harmful interference, and (2) this device must accept any interference received, including interference that may cause undesired operation.

Changes or modifications not expressly approved by the party responsible for compliance could void the user's authority to operate the equipment.

This device complies with Industry Canada Standard RSS-210.
Operation is subject to the following two conditions: (1) this device may not cause interference, and (2) this device must accept any interference that may cause undesired operation of the device.

Childproof Door Locks

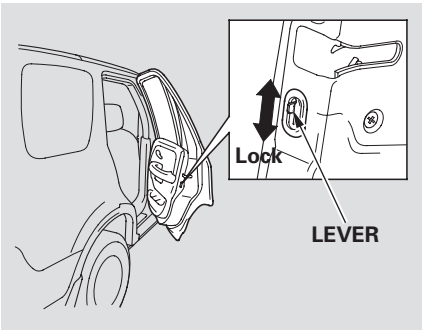

The childproof door locks are designed to prevent children seated in the rear from accidentally opening the rear doors. Each rear door has a lock lever near the edge. With the lever in the Lock position, the door cannot be opened from the inside regardless of the position of the lock tab. To open the door, pull the lock tab up and use the outside door handle.

Tailgate

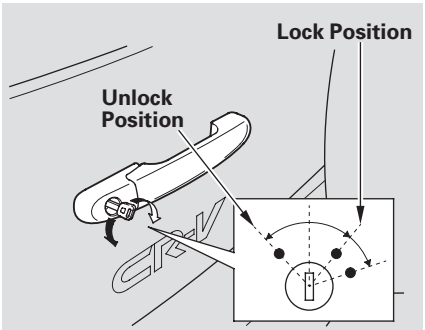

You can lock or unlock the tailgate in any of these ways:

- Use your master or valet key to lock and unlock the tailgate. Turn the key clockwise to lock the tailgate, and counterclockwise to unlock it.
- Lock the tailgate by pushing down the lock tab on the driver's door (see page 88), or by using the master or valet key in the driver's door lock.
- Lock or unlock the tailgate with the master door lock switch.
- *On EX model in the U.S., and EX and EX-L models in Canada*
  You can also lock and unlock the tailgate with the remote transmitter (see page 89).

CONTINUED

Keys and Locks

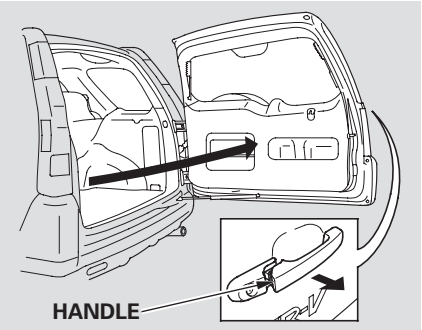

With the tailgate unlocked, open the tailgate by pulling the handle.

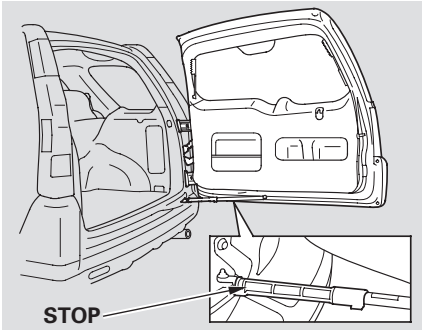

To keep the tailgate door open on an incline, use the stop from the tool kit. The tool kit is in the storage bin under the cargo floor. Put the stop on the support strut as shown. Make sure to remove the stop before closing the tailgate.

Opening the Hatch Glass

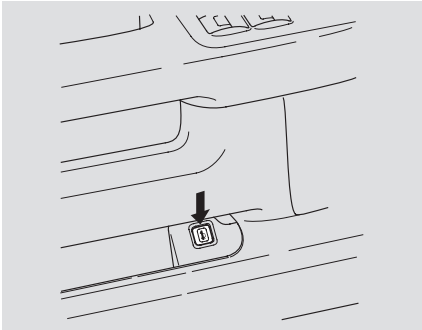

You can unlock the hatch glass in any of these ways:

- Press the hatch glass release button on the driver's door.

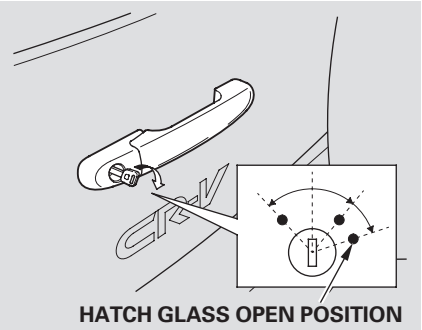

- Use the master or valet key in the tailgate lock. Turn the key clockwise as far as it will go.

- *On EX model in the U.S., and EX and EX-L models in Canada*
  Press and hold the hatch glass release button on the remote transmitter for about two seconds (see page 90).

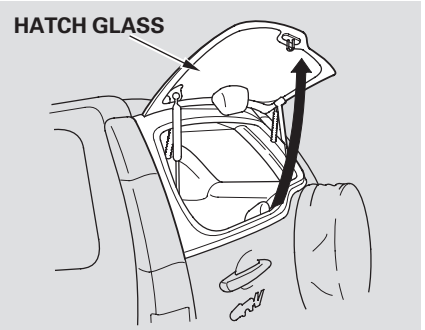

The hatch glass will pop up slightly. To open the hatch glass, lift it up fully.

Make sure the rear wiper switch is off and the wiper is in its parked position before opening the hatch glass.

To close the hatch glass, lower it, then press on the handle until it latches.

You can open the hatch glass to access the cargo area with the tailgate closed. Make sure the tailgate and the hatch glass are closed and locked securely before driving.

The rear wiper will not operate with the hatch glass open. If you open the hatch glass while the rear wiper is operating, the wiper will stop (see page 80).

See page 193 for information on cargo loading. Keep the tailgate and the hatch glass closed at all times while driving to avoid damaging the tailgate and the hatch glass, and to prevent exhaust gas from getting into the interior. See **Carbon Monoxide Hazard** on page 60 .

Glove Box

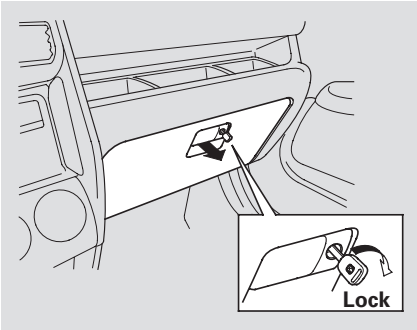

Open the glove box by pulling the bottom of the handle. Close it with a firm push. Lock or unlock the glove box with the master key.

The glove box light comes on only when the instrument panel lights are on.

⚠ WARNING

An open glove box can cause serious injury to your passenger in a crash, even if the passenger is wearing the seat belt.

Always keep the glove box closed while driving.

Front Seat Adjustments

See pages 13 — 15 for important safety information and warnings about how to properly position seats and seat-backs.

Make all seat adjustments before you start driving.

To adjust the seat forward and backward, pull up on the bar under the seat cushion's front edge. Move the seat to the desired position and release the bar. Try to move the seat to make sure it is locked in position.

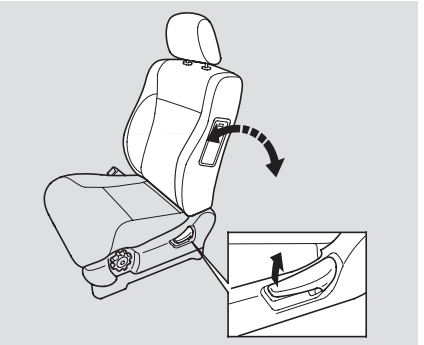

To change the angle of the seat-back, pull up on the lever on the outside of the seat bottom. Move the seat-back to the desired position and release the lever. Let the seat-back latch into the new position.

Seats

Driver's Seat Height Adjustment

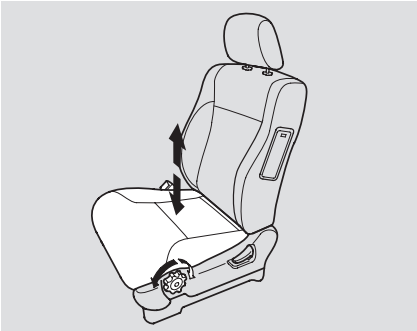

To adjust the height of the driver's seat, turn the dial on the outside of the seat bottom.

Front Seat Armrests

Only on vehicles with an automatic transmission

Each front seat has an armrest on the side of the seat-back. To use it, pivot it down.

Head Restraints

See page 16 for important safety information and a warning about how to properly position the head restraints.

Your vehicle is equipped with head restraints in all seating positions.

The head restraints help protect you and your passengers from whiplash and other injuries. They are most effective when you adjust them so the back of the occupant's head rests against the center of the restraint. A taller person should adjust the restraint as high as possible.

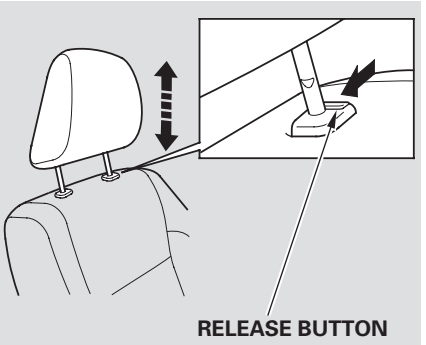

The head restraints in the front and rear outboard seating positions adjust for height. You need both hands to adjust the restraint. Do not attempt to adjust it while driving. To raise it, pull upward. To lower the restraint, push the release button sideways and push the restraint down.

To remove a front head restraint or a head restraint in one of the rear outboard seating positions for cleaning or repair, pull it up as far as it will go. Push the release button, then pull the restraint out of the seat-back.

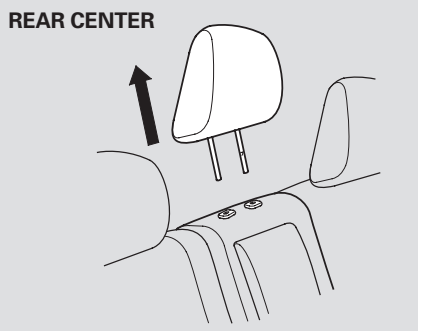

To remove the rear center head restraint, pull it up and out of the seat-back.

Rear Seat Adjustments

See pages 13 — 15 for important safety information and warnings about how to properly position seats and seat-backs.

Make all seat adjustments before you start driving.

The seat position and seat-back angle of the left and right sides of the rear seat can be adjusted separately.

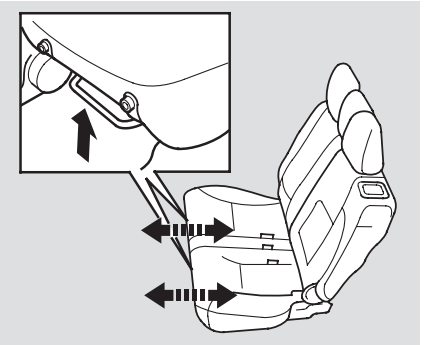

To adjust the rear seat forward and backward, pull up on the bar under the seat cushion's front edge. Move the seat to the desired position and release the bar. Try to move the seat to make sure it is locked in position.

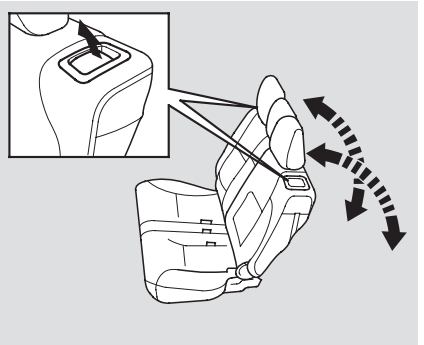

To change the angle of the seat-back, pull up on the release lever on the outside of the seat-back. Move the seat-back to the desired position, then release the lever. Make sure the seat-back latches in the new position.

When using the center seating position, adjust the left and right side of the rear seats to the same position.

Make sure all rear shoulder belts are positioned in front of the rear seat-backs after you adjust the rear seats.

Rear Seat Armrest

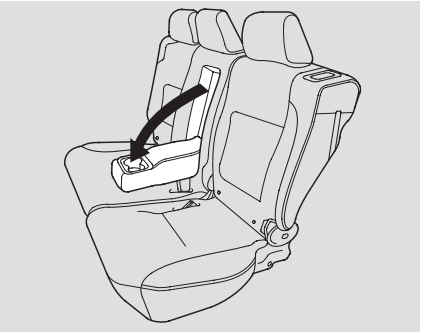

The rear seat armrest is located in the center of the rear seat. Pivot it down to use it.

Seats

Reclining the Front Seats

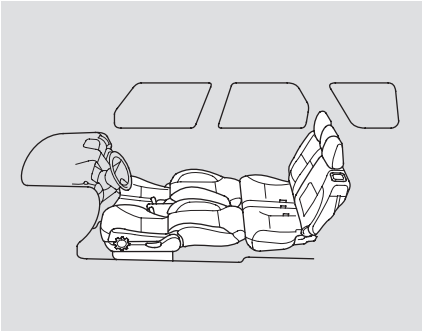

You can recline the seat-backs on the front seats to a fully flat position so they are level with the rear seat cushions, making a large cushioned area. To do this:

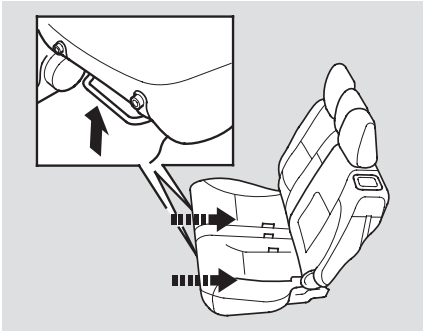

1. Adjust the rear seats as far back as they will go.

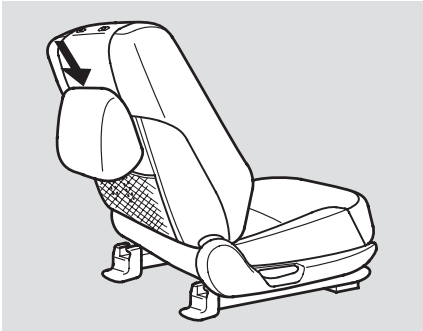

2. Remove the head restraints from the front seats (see page 99).

   Store the head restraints in the front seat-back pockets.

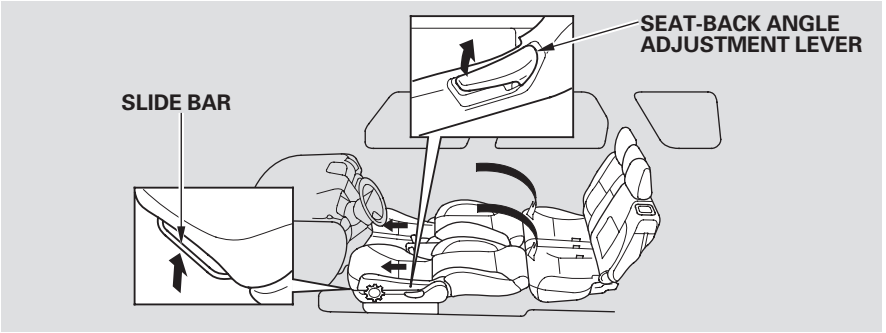

3. Adjust the front seats forward as far as they will go. Pull up the seat-back angle adjustment lever and pivot the seat-back backward. Release the lever when the seat-back is level with the rear seat cushion.

4. Move the front seat backward until it touches the rear seat.

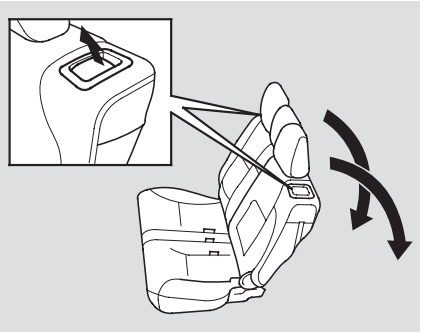

5. Adjust the rear seat-back to the desired position.

CONTINUED

Reverse this procedure to return the front and rear seats to the upright position. Make sure you install the head restraints and the seats are locked securely before driving.

When you return the seat-back to the upright position, hold the seat-back to keep it from going up too quickly.

Folding the Rear Seats
The rear seat-back can be folded down to give more cargo room. Each side folds down separately. With only half the seat folded, you can still carry a passenger in the rear seat.

You can also fold up each of the rear seats separately to create further cargo space (see page 106).

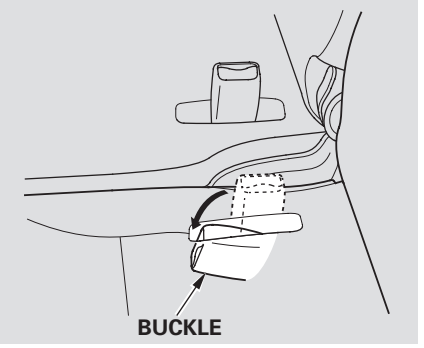

1. Push the seat belt buckles into the seat cushion.

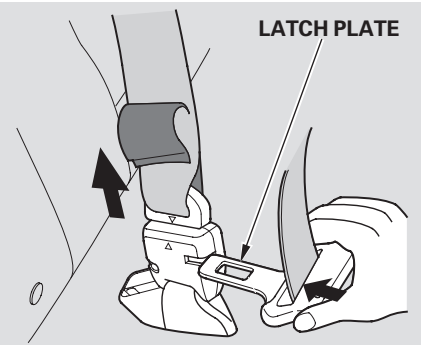

When you are folding the right half of the rear seat, use the latch plate to release the center seat belt from the detachable anchor (see page 108). Allow the seat belt to retract into the holder on the ceiling and store the buckles in it.

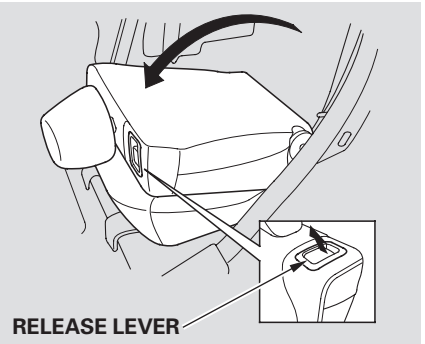

2. Lower the head restraint to its lowest position.

3. Pull up on the release lever on the outside of the seat-back.

4. Fold the seat-back forward.

Do not put any heavy items on the seat-back when it is folded.

Reverse this procedure to return the seat-back to the upright position. Tug on the seat-back to make sure it is latched. Position the seat belt in front of the seat-back. Make sure the seat is locked securely before driving.

CONTINUED

Seats

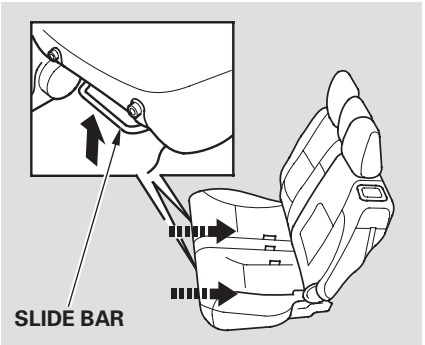

To fold up the rear seat:

1. Pull up the bar under the seat cushion and slide the rear seat backward.
   The rear seat will not fold up if it is not back as far as it will go.

2. Follow steps 1 through 4 on pages 104 and 105 for folding down the seat-back.

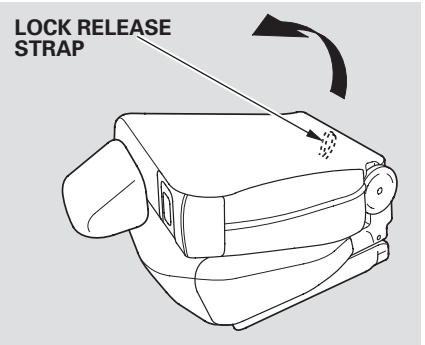

3. Unlock the seat from the floor by pulling the lock release strap under the seat cushion's back edge, then lift the rear of the seat. You cannot fold up the rear seat if it is not latched securely in the rearmost position.

4. Pivot the seat forward.

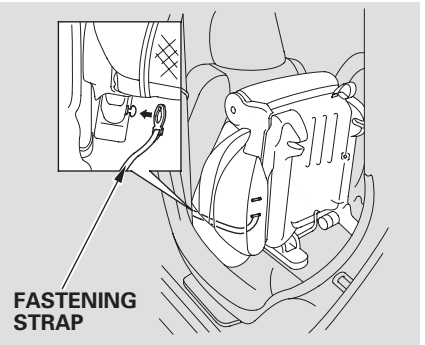

5. Pull out the fastening strap from the slit on the seat-back. Move the front seat forward slightly, then attach the anchor on the fastening strap to the hook on the bottom of the front seat. Adjust the front seat to the desired position.

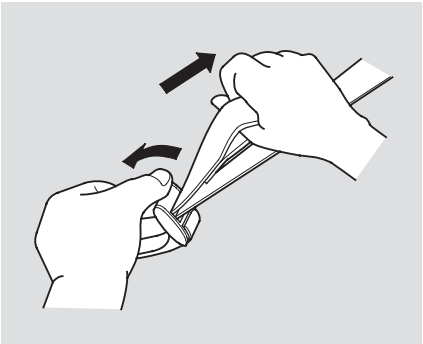

6. Tighten the strap to remove any slack and make sure the seat is secure.

Reverse this procedure to return the seat to the upright position.
Make sure the seat is securely latched before driving.
When you are not using the fastening strap, roll up the strap and store it properly into the slit on the seat-back.

Make sure all rear shoulder belts are positioned in front of the rear seat-backs.

In the center seating position of the rear seat, be sure the detachable anchor is latched securely before using the seat belt (see page 108).

Make sure all items in the cargo area are secured. Loose items can fly forward and cause injury if you have to brake hard. See **Carrying Cargo** on page 193 .

Detachable Anchor

The seat belt in the rear center seat is equipped with a detachable anchor. This allows the center seat belt to be unlatched when the right side of the rear seat is folded.

⚠ WARNING

Using the seat belt with the detachable anchor unlatched increases the chance of serious injury or death in a crash.

Before using the seat belt, make sure the detachable anchor is correctly latched.

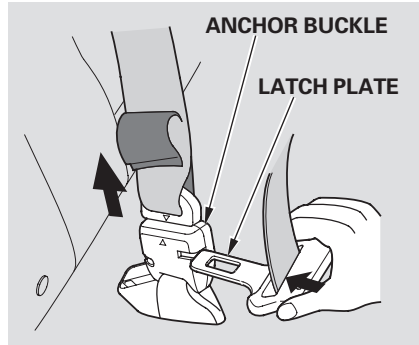

To unlatch the detachable anchor before folding the seat-back, insert the latch plate into the slot on the side of the anchor buckle and allow the seat belt to retract. Store the detachable anchor and seat belt latch plates in the retractor housing.

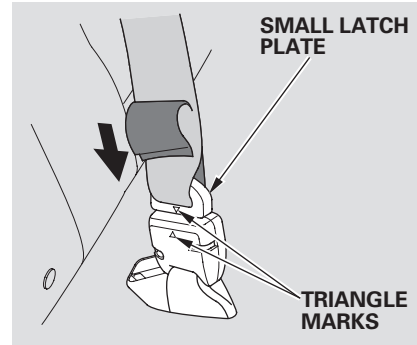

When the seat-back is returned to its upright position, be sure to latch the detachable anchor by lining up the triangle marks on the small latch plate and anchor buckle, then insert the plate into the buckle. Tug on the seat belt to verify that the detachable anchor is securely latched. Make sure the seat belt is not twisted.

Seat Heaters

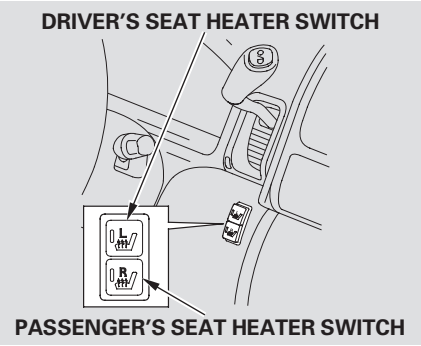

On EX-L model in Canada
Both front seats are equipped with seat heaters. The ignition switch must be ON (II) to use them. Push the heater switch to turn the power on or off. The pilot lamp lights and remains on while the heaters are on.

Do not use the seat heaters when the engine is off or when idling for a long period of time. They can drain the battery, making your vehicle hard to start.

Because of the sensors for the side airbag system, there is no heater in the seat-back.

Power Windows

Your vehicle's windows are electrically-powered. Turn the ignition switch to ON (II) to raise or lower any window.

Each door has a switch that controls its window. To open the window, push the switch down and hold it. Release the switch when you want the window to stop. Close the window by pulling back on the switch and holding it.

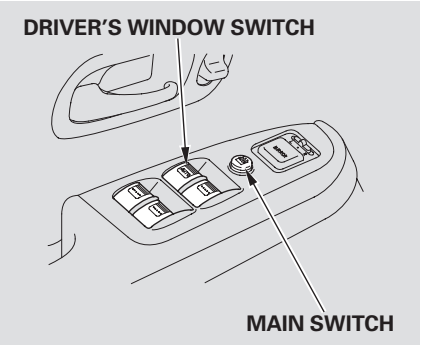

The driver's door armrest has a master power window control panel. To open any of the passenger's windows, push down on the appropriate switch and hold it until the window reaches the desired position. To close the window, pull back on the window switch. Release the switch when the window gets to the position you want.

⚠ WARNING

Closing a power window on someone's hands or fingers can cause serious injury.

Make sure your passengers are away from the windows before closing them.

Power Windows

The master control panel also contains these extra features:

AUTO — To open the driver's window fully, push the window switch firmly down, then release it. The window automatically goes down all the way. To stop the window from going all the way down, pull back on the window switch briefly.

To close the driver's window fully, pull back the window switch firmly, then release it. The window automatically goes all the way up. To stop the window from going all the way up, push down on the window switch briefly.

To open or close the driver's window partially, push down or pull back on the window switch lightly and hold it. The window will stop when you release the switch.

The light in the AUTO switch comes on when you turn the ignition switch to ON (II).

The MAIN switch controls power to the passengers' windows. When you push in the MAIN switch, the passengers' windows cannot be raised or lowered. The MAIN switch does not affect the driver's window. To cancel this feature, push on the switch again. Keep the MAIN switch pushed in when you have children in the vehicle so they do not injure themselves by operating the windows unintentionally.

Power Windows

Auto Reverse
If the driver's window runs into any obstacle while it is closing automatically, it will reverse direction, and then stop. To close the window, remove the obstacle, then use the window switch again.

Auto reverse stops sensing when the window is almost closed. You should always check that all passengers and objects are away from the window before closing it.

Any impact due to road conditions may cause the auto reverse function work unexpectedly on the closing window. If it happens frequently, there is a problem with your power window system. You should have your vehicle inspected by your dealer. You can still close the window by pulling back on the window switch lightly and hold it.

If your vehicle's battery is disconnected or goes dead, or the driver's window fuse is removed, the AUTO function will be disabled. The power window system needs to be reset after reconnecting the battery or installing the fuse. You should do the following.

1. Start the engine. Push down on the driver's window switch until the window is fully open.

2. Pull back on the driver's window switch to close the window completely, then hold the switch for a second or two more.

If the power windows do not operate properly after resetting, have your vehicle checked by a Honda dealer.

Moonroof

On EX model in the U.S., and EX-L model in Canada

The moonroof has two positions: it can be tilted up in the back for ventilation, or it can be slid back into the roof. Use the switch under the left dashboard vent to operate the moonroof. The ignition switch must be ON (II).

To tilt up the back of the moonroof, press and hold the center button ( ). To close the moonroof, press and hold the top of the switch ( ). To open the moonroof, press and hold the bottom of the switch ( ). Release the switch when the moonroof gets to the desired position. Make sure everyone's hands are away from the moonroof before opening or closing it.

⚠WARNING

Opening or closing the moonroof on someone's hands or fingers can cause serious injury.

Make sure all hands and fingers are clear of the moonroof before opening or closing it.

NOTICE

If you try to open the moonroof in below-freezing temperatures, or when it is covered with snow or ice, you can damage the moonroof panel or motor.

Mirrors

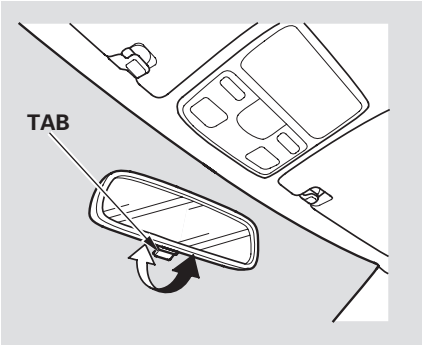

Keep the inside and outside mirrors clean and adjusted for best visibility. Be sure to adjust the mirrors before you start driving.

The inside mirror has day and night positions. The night position reduces glare from headlights behind you. Flip the tab on the bottom edge of the mirror to select the day or night position.

Adjusting the Power Mirrors

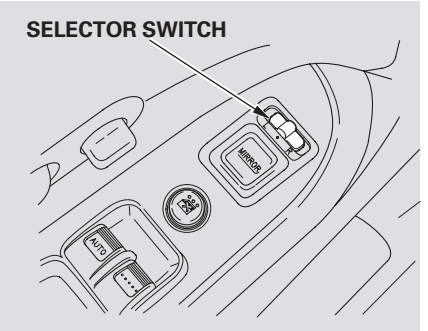

Adjust the outside mirrors with the adjustment switch on the driver's door armrest:

1. Turn the ignition switch ON (II).

2. Move the selector switch to L (driver's side) or R (passenger's side).

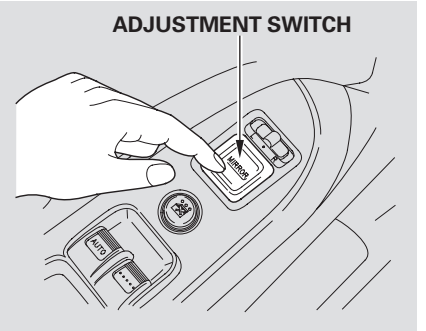

3. Push the appropriate edge of the adjustment switch to move the mirror right, left, up, or down.

4. When you finish, move the selector switch to the center (off) position. This turns off the adjustment switch so you can't move a mirror out of position by accidentally bumping the switch.

Mirrors, Center Table

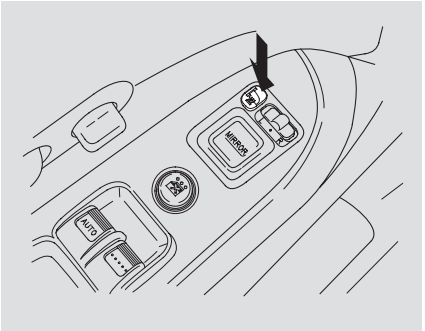

On EX and EX-L models in Canada
The outside mirrors are heated to remove fog and frost. With the ignition switch ON (II), turn on the heaters by pressing the button. The light in the button comes on as a reminder. Press the button again to turn the heaters off.

Center Table

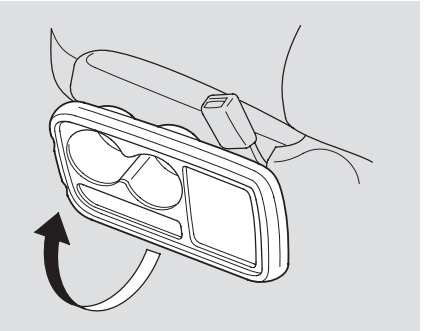

To use the center table, pull up the outside edge of the table until it latches. To store it, pull the lever and lower the table.

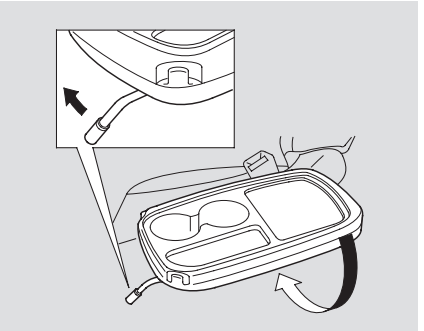

Sitting on or getting under the table, or putting heavy objects on the table, may damage or deform it.

Do not put any items on the table while driving. They may fall down or fly around when you go around corners or brake hard.

Beverage Holders

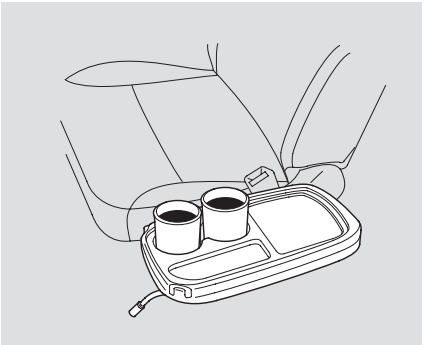

The center table has a beverage holder for the front passengers.

The rear seat also has a beverage holder in the center armrest. To use it, pivot the armrest down.

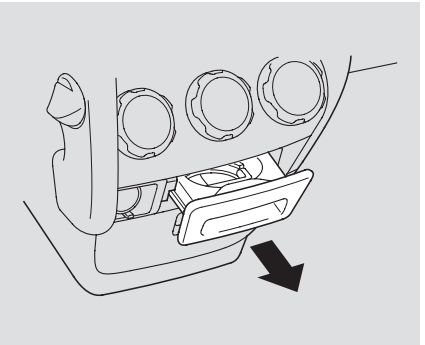

Only on vehicles with an automatic transmission

To use the front beverage holder, pull on the handle. Push the holder all the way in to close it.

Beverage Holders, Built-in Table

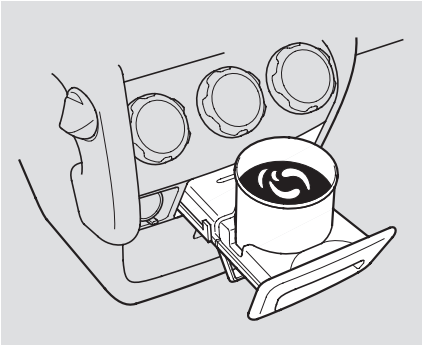

Be careful when you are using the beverage holder. A spilled liquid that is very hot can scald you or your passengers. Spilled liquids can also damage the upholstery, carpeting, and electrical components in the interior.

Built-in Table

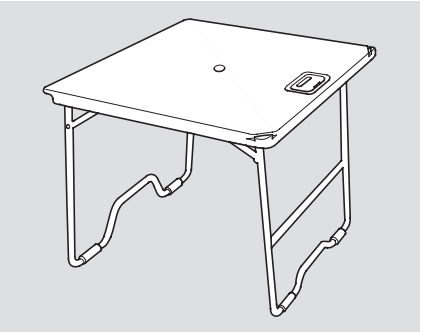

The cargo area floor can be taken out and used as a table.

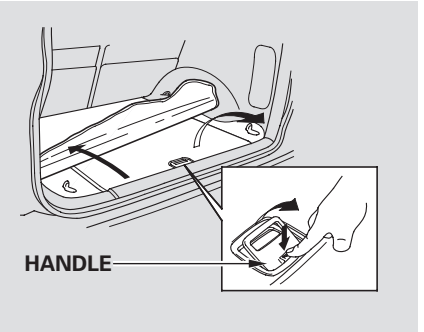

To remove the table, pull up the carpet. Lift and pull on the handle to slide the table out.

CONTINUED

Built-in Table

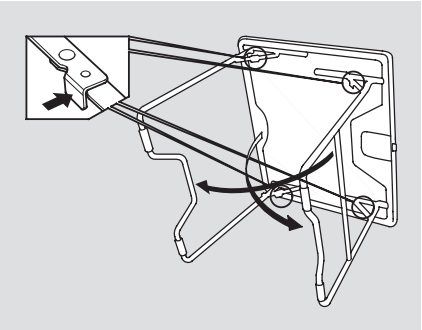

Unfold the legs. Lock them in place by pushing on the middle of the locking arms. Make sure all four are locked.

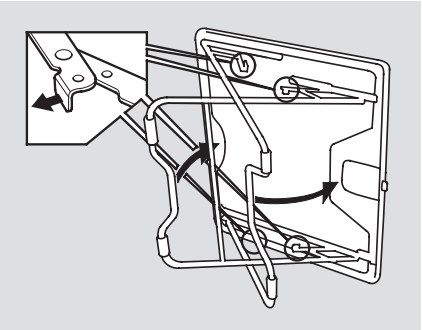

To fold the legs, pull on the middle of each locking arm.

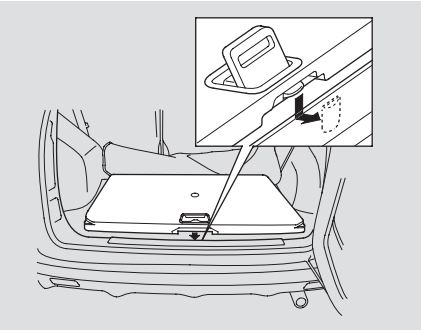

To put the table back in place, hold on to the handle and put the projection on the table into the hole in the cargo area floor.

Built-in Table, Center Pocket, Storage Box

Using the Built-in Table

- Be sure to lock the legs of the table.
- Do not stand on the table.
- Do not put a weight of over 44 lbs (20 kg) on the table.
- Hot items such as pots, pans, or kettles should not be placed directly on the table top.

Center Pocket

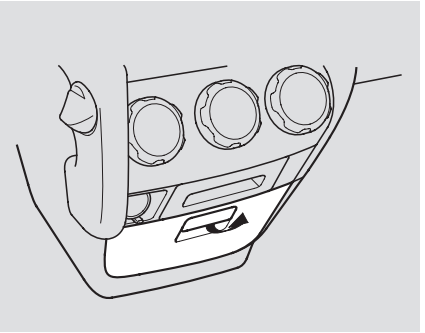

Only on vehicles with an automatic transmission

Open the center pocket by pulling the handle. Close it with a firm push.

Storage Box

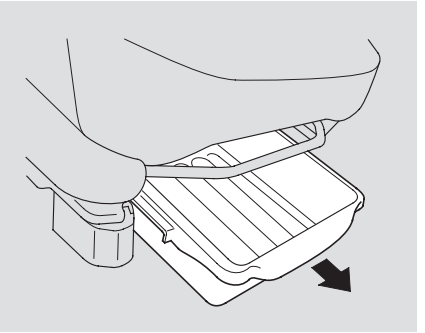

A storage box is located under the front passenger's seat. To use it, pull upward slightly on the front center edge of the box and slide it out.

CONTINUED

Storage Box, Driver's Pocket, Coin Tray

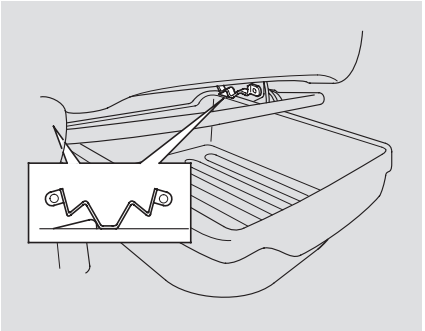

To remove the box for cleaning, pull upward on the front center edge to disengage the locking tabs under the seat bottom, then pull the box out.

Driver's Pocket

To open the driver's pocket, swing the lid down. Close it with a firm push.

Coin Tray

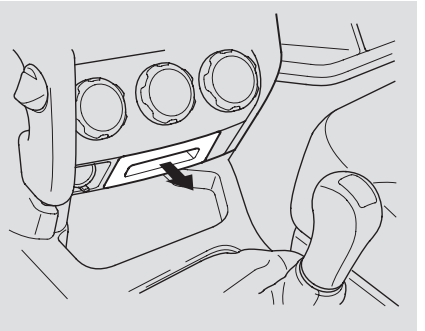

Only on vehicles with a manual transmission

The coin tray is located on the center dashboard. To open the coin tray, pull on the bottom edge. Close it with a firm push. The light in the tray comes on when the instrument panel lights are on.

Sunglasses Holder, Coat Hook

Sunglasses Holder

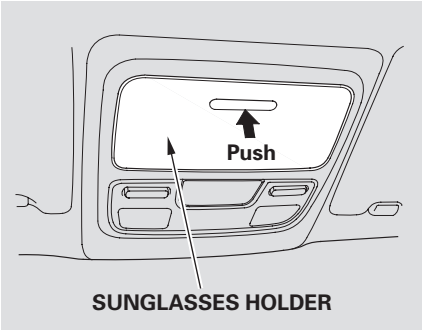

To open the sunglasses holder, push on the front edge. It will unlatch and swing down. To close it, push it until it latches. Make sure the holder is closed while you are driving.

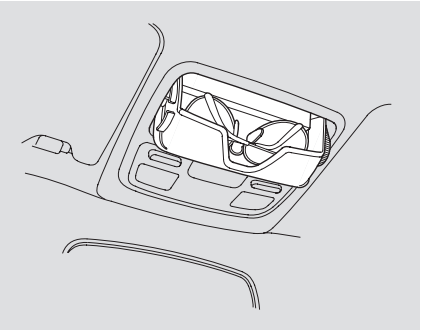

Some larger styles of sunglasses may not fit in the holder.

You may also store small items in this holder. Make sure they are small enough to let the holder close and latch, and that they are not heavy enough to cause the holder to pop open while driving.

Coat Hook

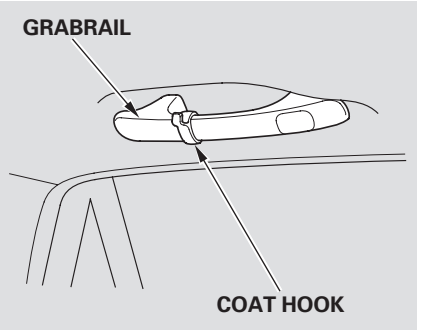

The rear seat grab rails can also be used as coat hooks.

This hook is not designed for large or heavy items.

Accessory Power Sockets

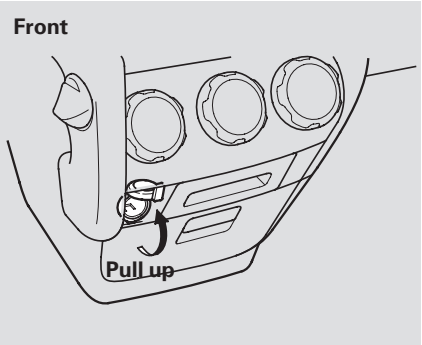

Your vehicle has two accessory power sockets. One is located on the dashboard, and the other is on the left side of the cargo area.

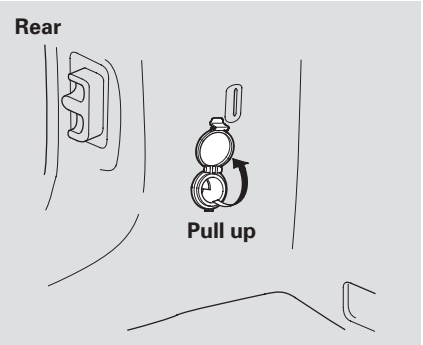

To use an accessory power socket, pull up on the cover.

These sockets are intended to supply power for 12 volt DC accessories that are rated 120 watts or less (10 amps). To power an accessory, the ignition switch must be in ACCESSORY (I) or ON (II).

When both sockets are being used, the combined power rating of both accessories should be 120 watts or less (10 amps).

They will not power an automotive type cigarette lighter element.

Dashboard Pocket

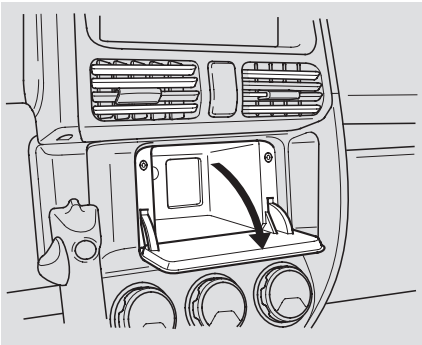

To open the dashboard pocket, swing the lid down. Close it with a firm push.

Interior Lights

Ceiling Light

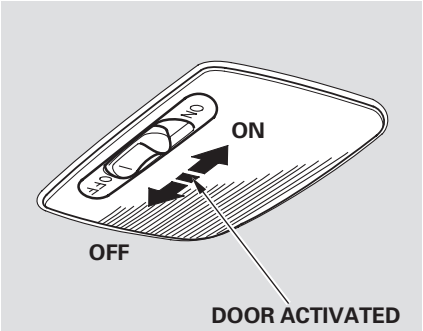

The ceiling light has a three-position switch. In the OFF position, the light does not come on. In the center position, the ceiling light comes on when you open any door. After all doors are closed tightly, the light fades out in about 30 seconds. In the ON position, the ceiling light stays on continuously.

If you leave any door open with the key not in the ignition switch, the ceiling light will go off after three minutes.

The ceiling light (with the switch in the center position) comes on when you remove the key from the ignition switch. If you do not open a door, the light fades out in about 30 seconds.

The ceiling light (with the switch in the center position) also comes on when you unlock the door with the key, the lock tab on the driver's door, the master door lock switch, or the remote transmitter (see page 90).

Spotlights

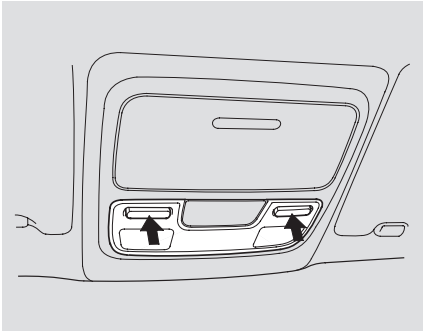

Turn on a spotlight by pushing the button next to each light. Push the button again to turn it off. You can use the spotlights at all times.

Interior Lights

Cargo Area Light

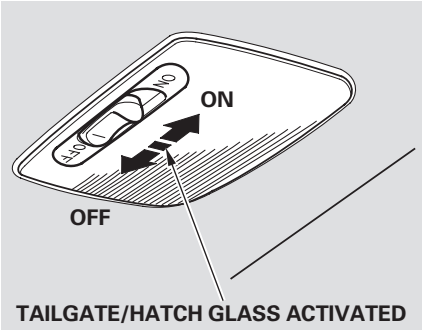

The cargo area light has a three-position switch. In the OFF position, the light does not come on. In the center position, the light comes on when you open the tailgate or the hatch glass. In the ON position, the light stays on continuously.

Ignition Switch Light

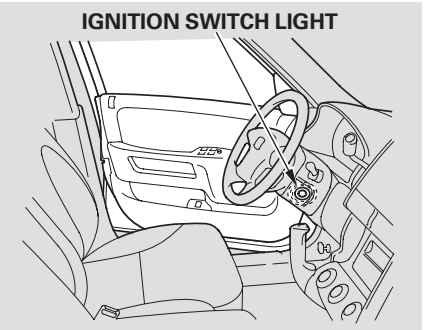

The ignition switch light comes on when you unlock the driver's door, and fades out about 30 seconds after you close the door.

Comfort and Convenience Features

Heating and Cooling 128
What Each Control Does 128
How to Use the System 131
To Turn Everything Off 136
Audio System 137
Audio System (U.S. and Canadian LX) 138
AM/FM/Cassette/CD Audio System 138
Operating the Radio 139
Adjusting the Sound 143
Audio System Lighting 144
Digital Clock 144
Operating the CD Player 146
CD Player Error Indications 148
Operating the CD Changer 149
CD Changer Error Indications 150
Operating the Cassette Player 151
Tape Search Functions 152
Audio System (U.S. EX and Canadian EX and EX-L) 154
AM/FM/Cassette/CD Changer Audio System 154
Operating the Radio 155
Adjusting the Sound 159
Audio System Lighting 160
Radio Frequencies 160
Radio Reception 161
Digital Clock 162
Operating the Cassette Player 164
Tape Search Functions 165
Caring for the Cassette Player 168
Operating the CD Changer 169
Loading CDs in the Changer 170
Operation 172
Removing CDs from the Changer 174
Protecting Compact Discs 176
CD Changer Error Indications 177
Theft Protection 178
Cruise Control 179

Heating and Cooling

Proper use of the Heating and Cooling system can make the interior dry and comfortable, and keep the windows clear for the best visibility.

What Each Control Does

Fan Control Dial
Turning this dial clockwise increases the fan's speed, which increases air flow.

Temperature Control Dial
Turning this dial clockwise increases the temperature of the air flow.

Air Conditioning (A/C) Button
This button turns the air conditioning ON and OFF. The indicator in the button lights when the A/C is on.

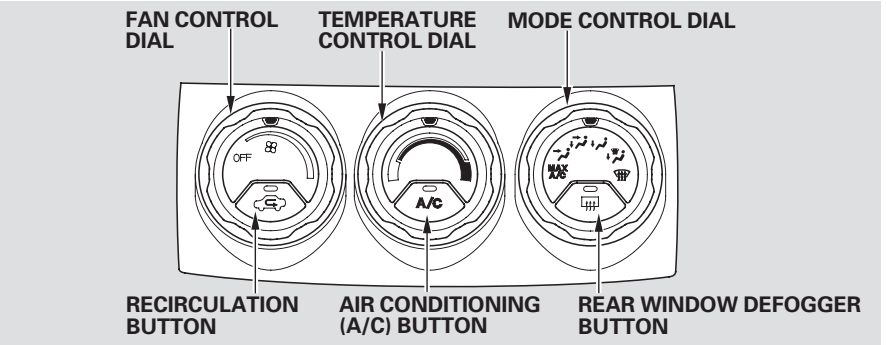

Recirculation Button
This button controls the source of the air going into the system. When the indicator in this button is lit, air from the vehicle's interior is sent through the system again (Recirculation mode). When the indicator is off, air is brought in from outside the vehicle (Fresh Air mode).

Rear Window Defogger Button
This button turns the rear window defogger on and off (see page 81).

Mode Control Dial
Use the MODE control dial to select the vents the air flows from. Some air will flow from the dashboard vents in all modes.

MAX A/C The system automatically turns on the A/C and switches to Recirculation mode. Air flows from the center and side vents in the dashboard.

Air flows from the center and corner vents in the dashboard.

Air flow is divided between the vents in the dashboard and the floor vents.

Air flows from the floor vents.

Air flow is divided between the floor vents and the defroster vents at the base of the windshield.

Air flows from the defroster vents at the base of the windshield.

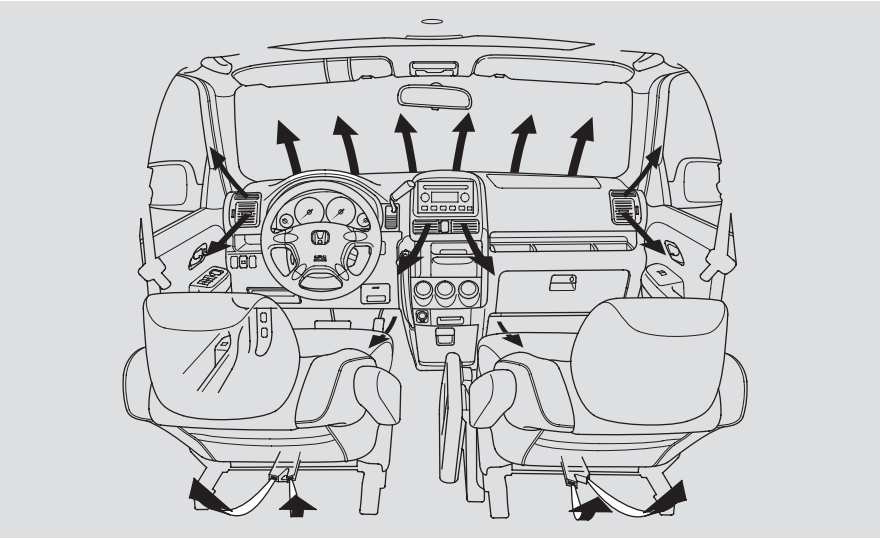

When you select or , the system automatically switches to Fresh Air mode and turns on the A/C.

With these two modes, the A/C stays on.

Heating and Cooling

Vent Controls

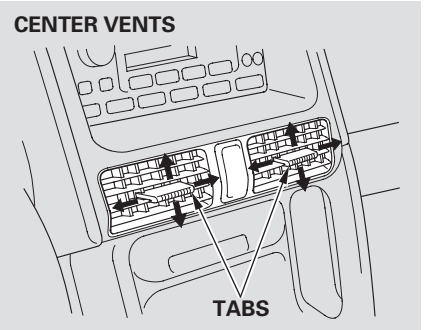

The direction of air flow from the vents in the center and each side of the dashboard is adjustable.

To adjust the air flow from each center vent, move the tab up-and-down and side-to-side.

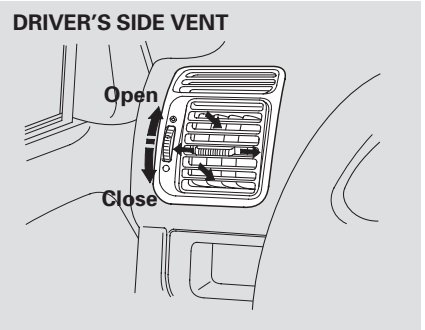

To adjust the air flow from each side vent, pivot the vent up-and-down and move the tab side-to-side.

The vents in the corners of the dashboard can be opened and closed with the dials next to them.

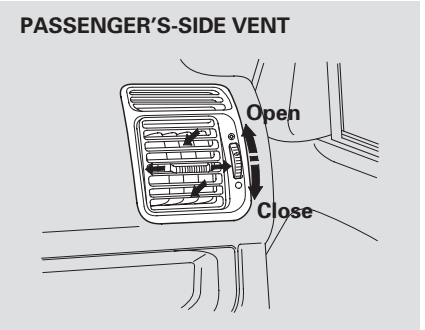

How to Use the System

This section covers how to set up the system controls for ventilation, heating, cooling, dehumidifying, and defrosting.

The engine must be running for the heater and air conditioning to generate hot and cold air. The heater uses engine coolant to warm the air. If the engine is cold, it will be several minutes before you feel warm air coming from the system.
The air conditioning does not rely on engine temperature.

It is best to leave the system in Fresh Air mode under almost all conditions. Keeping the system in Recirculation mode, particularly with the A/C off, can cause the windows to fog up. Switch to Recirculation mode when you are driving through smoky or dusty conditions, then switch back to Fresh Air mode when the condition clears.

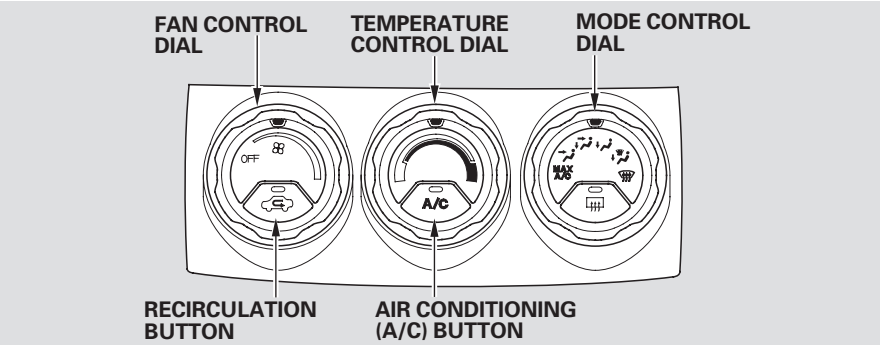

The outside air intakes for the heating and cooling system are at the base of the windshield. Keep these clear of leaves and other debris.

Ventilation

The flow-through ventilation system draws in outside air, circulates it through the interior, then exhausts it through vents near the tailgate.

1. Turn the temperature control dial all the way to the left.
   Make sure the A/C is off.
2. Select and Fresh Air mode.
3. Set the fan to the desired speed.

CONTINUED

Heating and Cooling

To Cool with A/C

1. Turn on the A/C by pressing the button. The light in the button comes on when a fan speed is selected.
2. Make sure the temperature control dial is all the way to the left.
3. Select .
4. If the outside air is humid, select Recirculation mode. If the outside air is dry, select Fresh Air mode.
5. Set the fan to the desired speed.

To cool the interior with MAX A/C:

1. Set the mode control dial to MAX A/C.
   The system automatically turns on the A/C, selects and switches to Recirculation mode.
2. Make sure the temperature control dial is all the way to the left.
3. Set the fan to the desired speed.

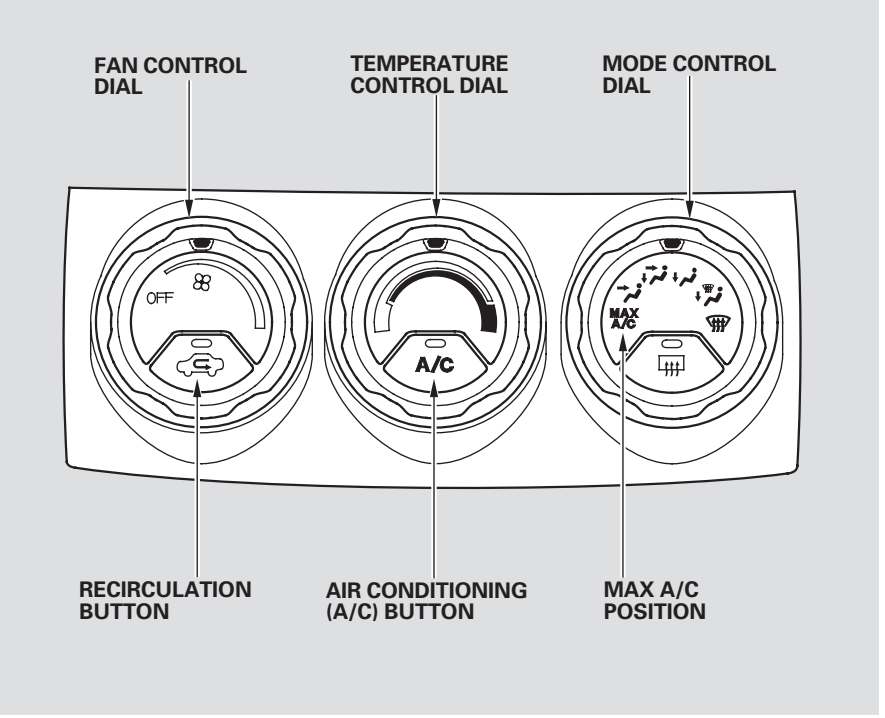

If the interior is very warm from being parked in the sun, you can cool it down more rapidly by setting up the controls this way:

1. Start the engine.
2. Turn on the A/C by pressing the button. Make sure the temperature control dial is all the way to the left.
3. Set the fan to maximum speed.
4. Open the windows partially. Select and Fresh Air mode.

When the interior has cooled down to a more comfortable temperature, close the windows and set the controls as described for normal cooling.

Air conditioning places an extra load on the engine. Watch the engine coolant temperature gauge (see page 74) when driving in stop-and-go traffic or climbing a long, steep hill. If it moves near the red zone, turn off the A/C until the gauge reads normally.

To Heat

To warm the interior:

1. Start the engine.
2. Select .
3. Set the fan to the desired speed.
4. Adjust the warmth of the air with the temperature control dial.

CONTINUED

Heating and Cooling

To Heat and Dehumidify with Air Conditioning

Air conditioning, as it cools, removes moisture from the air. When used in combination with the heater, it makes the interior warm and dry.

1. Set the fan to the desired speed.
2. Turn on the air conditioning.
3. Select and Fresh Air mode.
4. Adjust the temperature control dial so the mixture of heated and cooled air feels comfortable.

This setting is suitable for all driving conditions whenever the outside temperature is above 32°F (0°C).

To Defog and Defrost

To remove fog from the inside of the windows:

1. Set the fan to the desired speed.
2. Select .
   When you select , the system automatically switches to Fresh Air mode and turns on the A/C.
3. Adjust the temperature control dial so the air flow from the defroster vents feels warm.
4. Turn on the rear window defogger to help clear the rear window.
   When you switch to another mode from , the A/C stays on. Press the A/C button to turn it off.

To remove exterior frost or ice from the windshield and side windows after the vehicle has been sitting out in cold weather:

1. Start the engine.
2. Select .
   When you select , the system automatically switches to Fresh Air mode and turns on the A/C.
3. Set the fan and temperature controls to maximum.

To rapidly remove exterior frost or ice from the windshield (on very cold days), first select the Recirculation mode. Once the windshield is clear, select the Fresh Air mode to avoid fogging the windows.

These settings direct all the air flow to the defroster vents at the base of the windshield and the side window defroster vents. The air flow will get warmer and clear the windows faster as the engine warms up. You can close the side vents with the dial beside each vent. This will send more warm air to the windshield defroster vents.

For safety, make sure you have a clear view through all the windows before driving away.

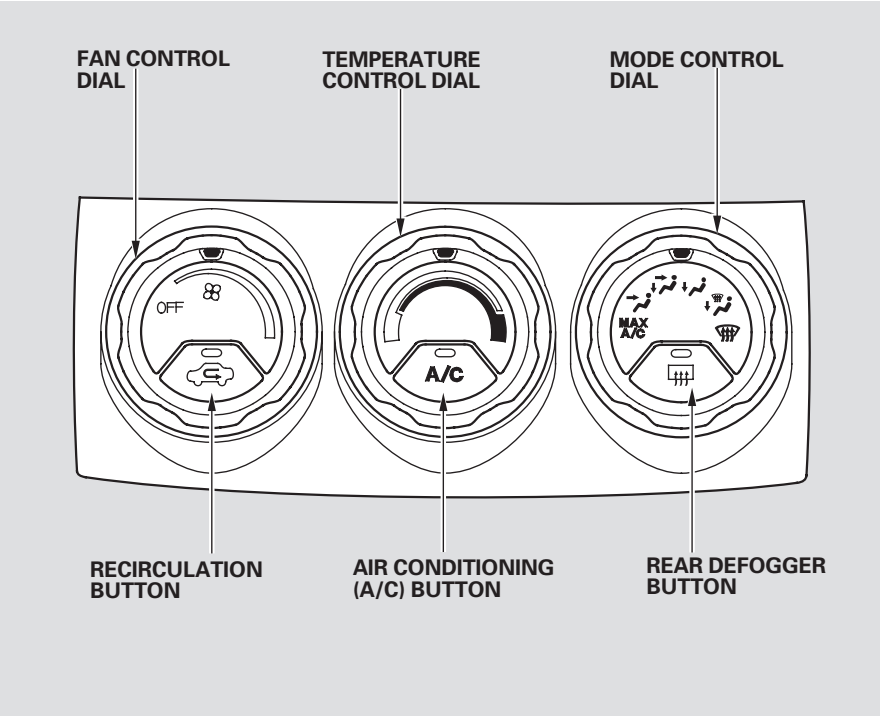

Heating and Cooling

To Turn Everything Off
To shut off the system temporarily, turn the fan speed and temperature control dials all the way to the left.

No air flow can cause the windows to fog up. It is recommended that you keep the fan on at all times so stale air and moisture do not build up in the interior and cause fogging.

Audio System

Your vehicle has either of the audio systems described in this section. Read the appropriate pages in this section for operation of the audio system installed in your vehicle.

- pages 138 to 153 for LX model
- pages 154 to 177 for EX and EX-L models

Also, read page 168 for how to take care of your cassette player.

If your vehicle has a different audio system from these two types, read the radio manufacturer's manual that came with your vehicle for its operation.

LX Model

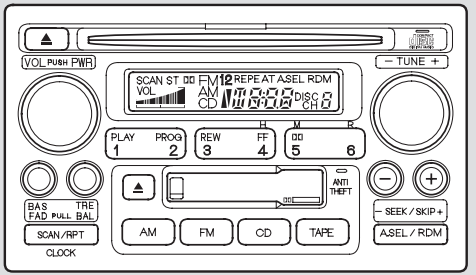

EX and EX-L Models

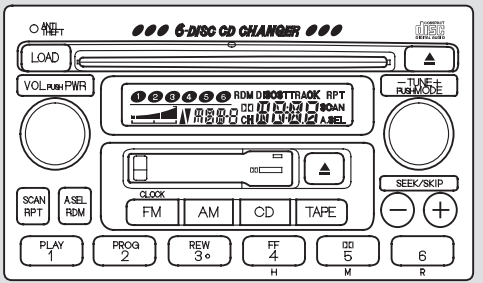

Audio System

AM/FM/Cassette/CD Audio System

On LX model in the U.S. and Canada

Your Honda's audio system provides clear reception on both AM and FM bands, while the preset buttons allow you to easily select your favorite stations.

The anti-theft feature will disable the system if it is disconnected from the vehicle's battery. To get the system working again, you must enter a code number (see page 178).

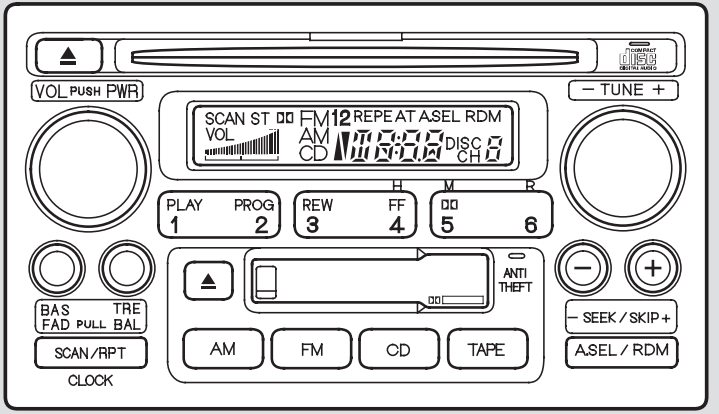

Operating the Radio

The ignition switch must be in ACCESSORY (I) or ON (II) to operate the audio system. Turn the system on by pressing the PWR/VOL knob, or the AM or FM button. Adjust the volume by turning the knob.

The band and frequency that the radio was last tuned to is displayed. To change bands, press the AM or FM button. On the FM band, ST will be displayed if the station is broadcasting in stereo. Stereo reproduction on AM is not available.

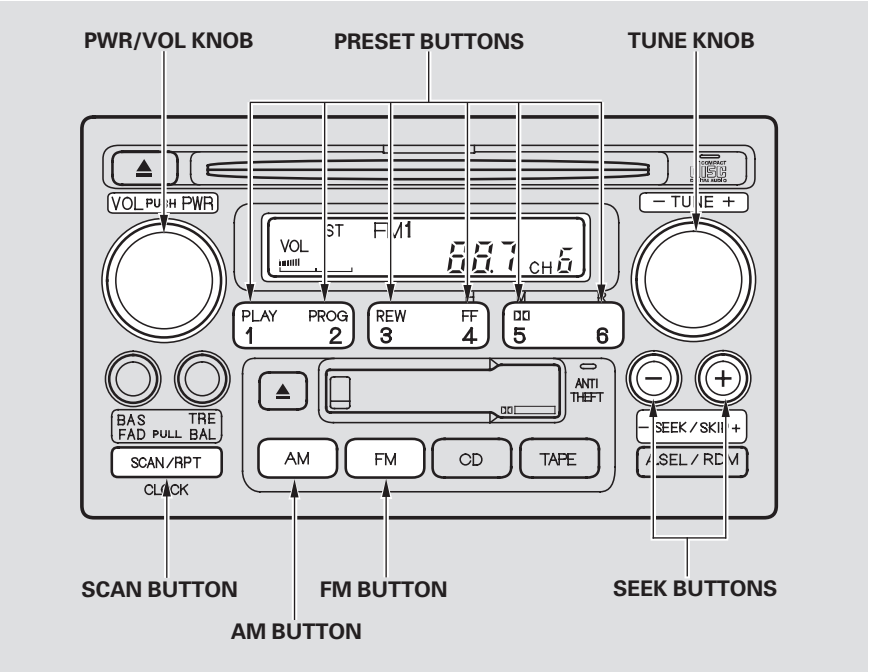

CONTINUED

Audio System

You can use any of five methods to find radio stations on the selected band: TUNE, SEEK, SCAN, AUTO SELECT, and the preset buttons.

TUNE — Use the TUNE knob to tune the radio to a desired frequency. Turn the TUNE knob to the right to tune to a higher frequency, or to the left to tune to a lower frequency. Turn the knob right or left until the display reaches the desired frequency.

SEEK — The SEEK function searches the band for a station with a strong signal. To activate it, press either SEEK button (⊖ or ⊕), then release it. Depending on which SEEK button you press, the system scans upward or downward from the current frequency. It stops when it finds a station with a strong signal.

SCAN — The SCAN function samples all the stations with strong signals on the selected band. To activate it, press the SCAN button, then release it. You will see SCAN in the display. The system will scan up the band for a station with a strong signal. When it finds one, it will stop and play that station for approximately five seconds. If you do nothing, the system will then scan for the next strong station and play that for five seconds. When it plays a station that you want to continue listening to, press the SCAN button again.

Preset — You can store the frequencies of your favorite radio stations in the six preset buttons. Each button will store one frequency on the AM band, and two frequencies on the FM band.

To store a frequency:

1. Select the desired band, AM or FM. FM1 and FM2 let you store two frequencies with each preset button.
2. Use the TUNE, SEEK, or SCAN function to tune the radio to a desired station.
3. Pick the Preset button you want for that station. Press the button and hold it until you hear a beep.
4. Repeat steps 1 to 3 to store a total of six stations on AM and twelve on FM.

Once a station's frequency is stored, simply press and release the proper preset button to tune to it.

The preset frequencies will be lost if your vehicle's battery goes dead, is disconnected, or the radio fuse is removed.

AUTO SELECT — If you are traveling far from home and can no longer receive the stations you preset, you can use the Auto Select feature to find stations in the local area.

To activate Auto Select, press the A. SEL button. A. SEL will flash in the display, and the system will go into scan mode for several seconds. It automatically scans both bands, looking for stations with strong signals. It stores the frequencies of six AM stations and twelve FM stations in the preset buttons. You can then use the preset buttons to select those stations.

If you are in a remote area, Auto Select may not find six strong AM stations or twelve strong FM stations. If this happens, you will see a “0” displayed when you press any preset button that does not have a station stored.

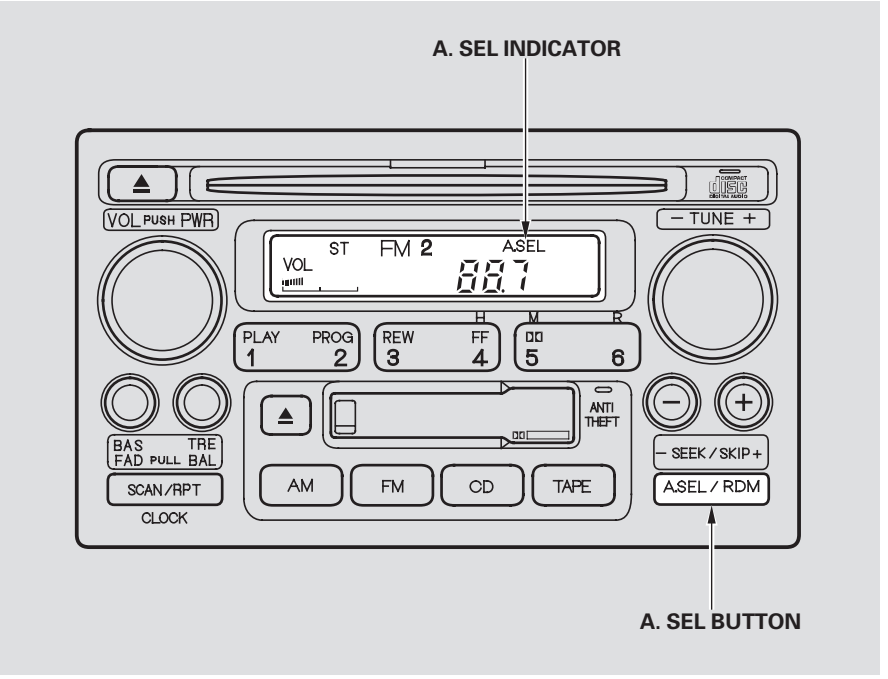

CONTINUED

Audio System

If you do not like the stations Auto Select has stored, you can store other frequencies in the preset buttons. Use the TUNE, SEEK, or SCAN function to find the desired frequencies, then store them in the selected preset buttons as described previously.

Auto Select does not erase the frequencies that you preset previously. When you return home, turn off Auto Select by pressing the A. SEL button. The preset buttons will then select the frequencies you originally set.

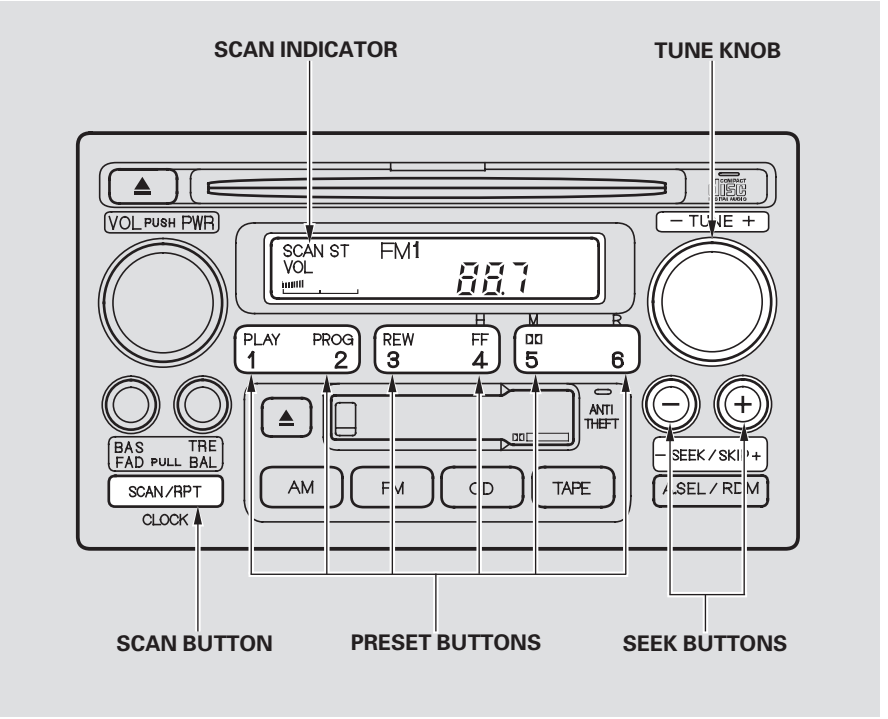

Adjusting the Sound Balance/Fader — These two controls adjust the strength of the sound coming from each speaker. The Balance control adjusts the side-to-side strength, while the Fader control adjusts the front-to-back strength.

To adjust the fader, push on the BASS/FADER control knob to get it to pop out. Pull it out slightly farther, and adjust the front-to-back sound to your liking. Push the knob back in when you are done so you cannot change the setting by accidentally bumping it.

To adjust the balance, push on the TREBLE/BALANCE control knob to get it to pop out. Pull it out slightly farther, and adjust the side-to-side sound to your liking. Push the knob back in when you are done so you cannot change the setting by accidentally bumping it.

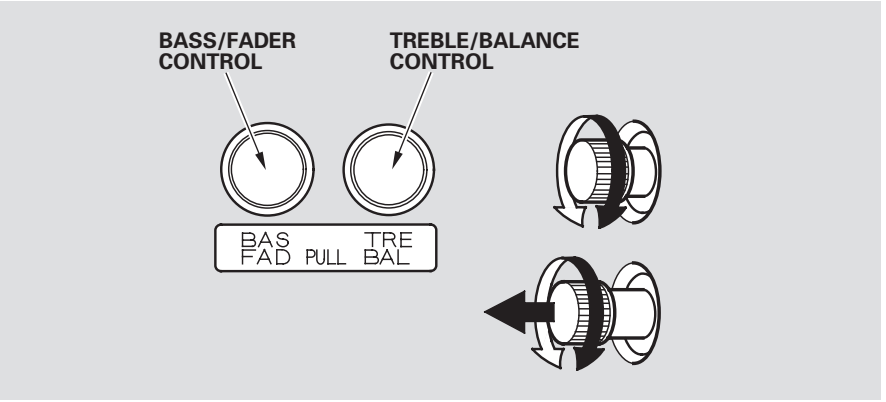

Treble/Bass — Use these controls to adjust the tone to your liking.

To adjust the Treble level, push on the TREBLE/BALANCE control knob to get it to pop out. Without pulling it out farther, turn the knob to adjust the treble level. Push the knob back in when you are done so you cannot change the setting by accidentally bumping it.

To adjust the Bass level, push on the BASS/FADER control knob to get it to pop out. Without pulling it out farther, turn the knob to adjust the bass level. Push the knob back in when you are done so you cannot change the setting by accidentally bumping it.

Audio System

Audio System Lighting

You can use the instrument panel brightness control knob to adjust the illumination of the audio system (see page 77). The audio system illuminates when the parking lights are on, even if the radio is turned off.

Radio Frequencies and Reception

For information, see page 160.

Digital Clock

The audio system display usually shows the time when the ignition switch is in ACCESSORY (I) or ON (II). It shows the operation mode of the radio, cassette player, CD player, or optional CD changer when you operate them, then goes back to the time display after five seconds.

If an error occurs while operating the CD player or optional CD changer, the display will keep showing the error code and will not switch to the time display until the error is corrected (see pages 148 and 150).

You can set the time only when the clock is displayed.

To set the time, press the CLOCK (SCAN/RPT) button until you hear a beep. The displayed time begins to blink.

Press and hold the H (Preset 4) button until the hour advances to the desired time.

Press and hold the M (Preset 5) button until the minutes advance to the desired time.

Press the CLOCK (SCAN/RPT) button again to enter the set time.

You can quickly set the time to the nearest hour. If the displayed time is before the half hour, the clock is set back to the previous hour by pressing the CLOCK (SCAN/RPT) button until you hear a beep, then pressing the RESET (Preset 6) button. If the displayed time is after the half hour, the clock is set forward to the beginning of the next hour.

For example:
- 1:06 would RESET to 1:00
- 1:52 would RESET to 2:00

If your vehicle's battery is disconnected or goes dead, the time setting will be lost. To set the time again, follow the setting procedure.

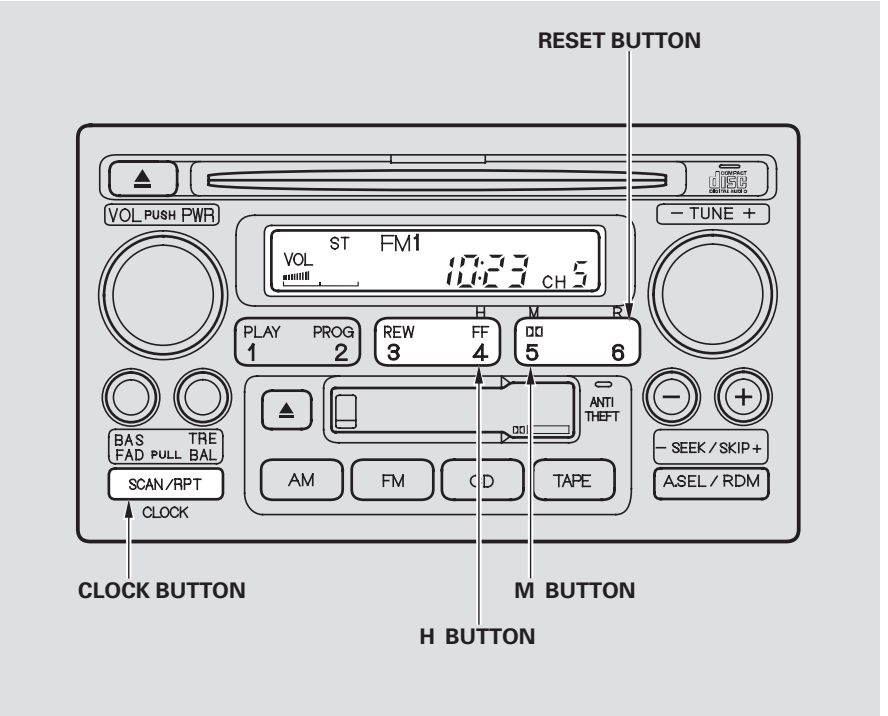

Audio System

Operating the CD Player

You operate the CD player with the same controls used for the radio.

With the system on, insert the disc into the CD slot. Push the disc in halfway, the drive will pull it in the rest of the way and begin to play. The number of the track that is playing is shown in the display.

You can also play 3-inch (8-cm) discs without using an adapter ring. Play only standard round discs. Odd-shaped CDs may jam in the drive or cause other problems.

For best results when using CD-R discs, use only high quality discs labeled for audio use. When recording a CD-R, the recording must be closed in order for the disc to be used by CD players. CD-RW discs will not work in this unit.

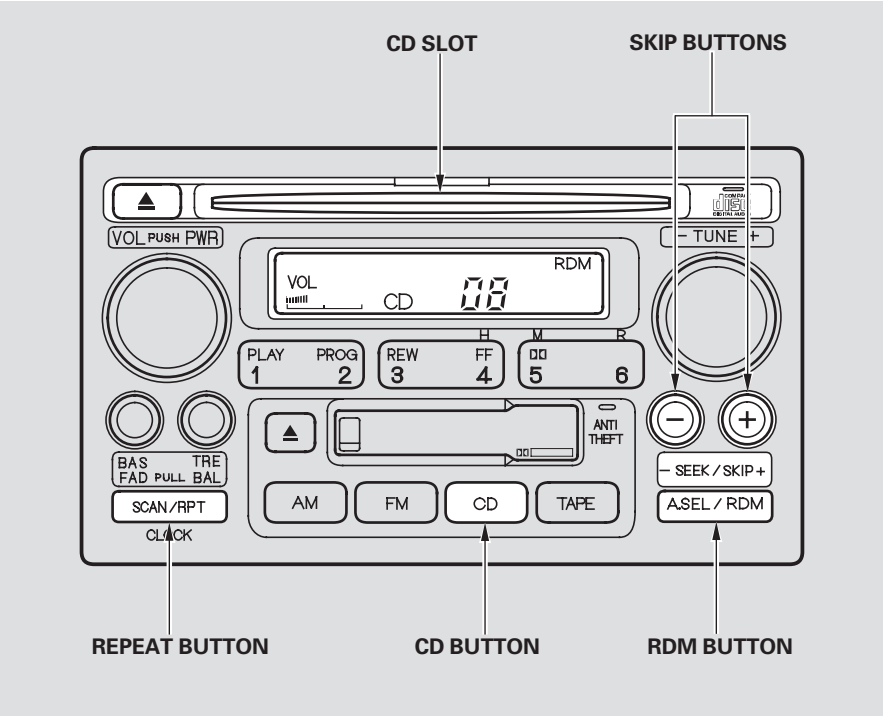

When the system reaches the end of the disc, it will return to the beginning and play the disc again.

You can switch to the radio while a CD is playing by pressing the AM or FM button. Press the CD button to return to playing the CD. The CD will begin playing where it left off.

If you turn the system off while a CD is playing, either with the PWR/VOL knob or by turning off the ignition, the disc will stay in the drive. When you turn the system back on, the CD will begin playing where it left off.

Press the eject button to remove the disc from the drive.

If you eject the disc, but do not remove it from the slot, the system will automatically reload the disc after 15 seconds and put the CD player in pause mode. To begin playing the disc, press the CD button.

You can use the SKIP buttons while a disc is playing to select passages and change tracks.

To move rapidly within a track, press and hold an appropriate SKIP button. Press the ⊕ button to move forward, or the ⊖ button to move backward. Release the button when the system reaches the point you want.

Each time you press the ⊕ button and release it, the system skips forward to the beginning of the next track. Press and release the ⊖ button to skip backward to the beginning of the current track. Press and release it again to skip to the beginning of the previous track.

REPEAT — To activate the Repeat feature, press and release the Repeat button. You will see REPEAT in the display. The system continuously replays the current track. Press the Repeat button again to turn it off.

RANDOM PLAY — This feature, when activated, plays the tracks on the CD in random order, rather than in the order they are recorded on the CD. To activate Random Play, press the RDM button. You will see RDM in the display. The system will then select and play tracks randomly. This continues until you deactivate Random Play by pressing the RDM button again.

Protecting Compact Discs
For information on how to handle and protect compact discs, see page 176 .

Audio System

CD Player Error Indications

If you see an error indication in the display while operating the CD player, find the cause in the chart to the right. If you cannot clear the error indication, take the vehicle to your Honda dealer.

Indication	Cause	Solution
CD Err	Mechanical Error	Press the EJECT button and pull out the disc. Check the disc for damage or deformation. If the CD cannot be pulled out or the error indication does not disappear after the disc is ejected, see your Honda dealer. Do not try to force the disc out of the player.
CD --H	High temperature	Will disappear when the temperatue returns to normal.

Operating the CD Changer (Optional)
A Compact Disc changer is available from your dealer. It holds up to six discs, providing several hours of continuous entertainment. You operate this CD changer with the same controls used for the in-dash CD player.

Load the desired CD's in the magazine and load the magazine in the changer according to the instructions that came with the unit. Play only standard round discs. Odd-shaped CDs may jam in the drive or cause other problems.

For best results when using CD-R discs, use only high quality discs labeled for audio use. When recording a CD-R, the recording must be closed in order for the disc to be used by CD players. CD-RW discs will not work in this unit.

To select the CD changer, press the CD button. The disc and track numbers will be displayed.

To select a different disc, press the appropriate preset button (1 – 6). If you select an empty slot in the magazine, the changer will, after finding that slot empty, try to load the CD in the next slot. This continues until it finds a CD to load and play.

If you load a CD in the in-dash player while the changer is playing a CD, the system will stop the changer and begin playing the in-dash CD. To select the changer again, press the CD button. Play will begin where it left off. Use the CD button to switch between the player and the changer.

If you eject the disc in the in-dash CD while it is playing, the system will automatically switch to the CD changer and begin play where it left off. If there are no CDs in the changer, the display will flash. You will have to select another mode (AM or FM) with the button.

When you switch back to CD mode, the system selects the same unit (in-dash or changer) that was playing when you switched out of CD mode.

To use the SKIP, REPEAT, and RANDOM functions, refer to the in-dash player operating instructions.

Protecting Compact Discs
For information on how to handle and protect compact discs, see page 176 .

Audio System

CD Changer Error Indications

If you see an error indication in the display while operating the optional CD changer, find the cause in the chart to the right. If you cannot clear the error indication, take the vehicle to your Honda dealer.

Indication	Cause	Solution
CD E01	Disc-changer malfunction	Consult your Honda dealer.
CD E02	Disc is in changer mechanism	Press the magazine eject button, and insert an empty magazine.
CD --H	High temperature	Will disappear when the temperature returns to normal.
CD EEE	Misconnection or disconnection of CD changer	See your Honda dealer.
CD ---	No CD magazine in the CD changer	Insert CD magazine.
CD 00 disc 0	No CD in magazine	Insert CD in magazine.

Operating the Cassette Player

The cassette system features Dolby* noise reduction, automatic sensing of chromium-dioxide (CrO_2) tape, and autoreverse for continuous play.

To operate the cassette player, the ignition switch must be in ACCESSORY (I) or ON (II). Make sure the tape opening on the cassette is facing to the right, then insert the cassette most of the way into the slot. The system will pull it in the rest of the way, and begin to play.

* Dolby noise reduction manufactured under license from Dolby Laboratories Licensing Corporation. "DOLBY" and the double-D symbol ▯▯ are trademarks of Dolby Laboratories Licensing Corporation.

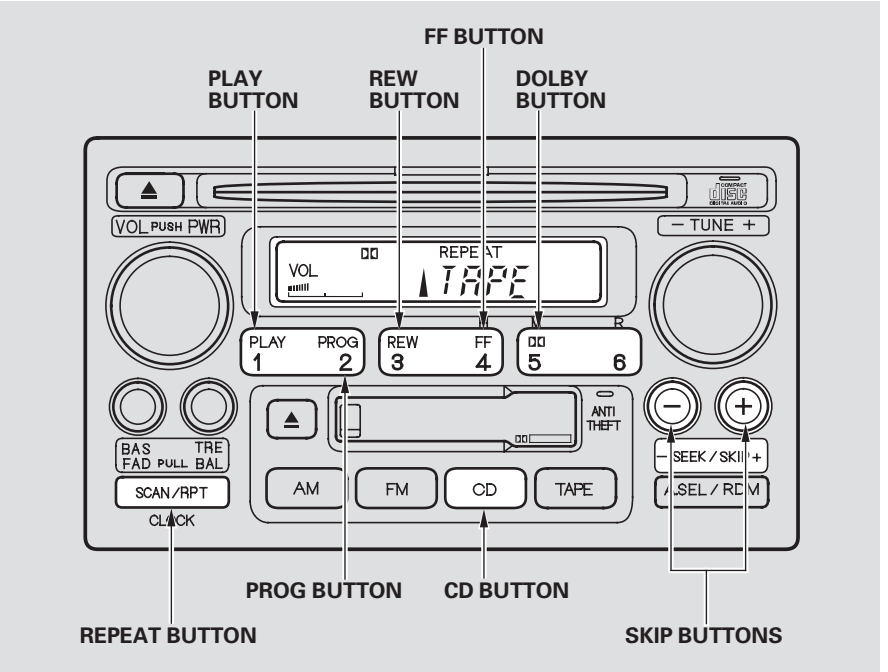

CONTINUED

Audio System

The tape direction indicator will light to show you which side of the cassette is playing. The ▲ indicates the side you inserted facing upward is now playing. If you want to play the other side, press the PROG button.

Dolby noise reduction turns on when you insert a cassette. The DD indicator will light in the display. If the tape was not recorded with Dolby noise reduction, turn it off by pressing the DD button.

Noise reduction remains off until you turn it on by pressing the button again.

When the system reaches the end of the tape, it will automatically reverse direction and play the other side. If you want to remove the cassette from the drive, press the EJECT button.

You can remove the cassette with the ignition switch in any position, even if the audio system is turned off.

If you turn the system off while a tape is playing, either with the PWR/VOL knob or by turning off the ignition, the cassette will remain in the drive. When you turn the system back on, the tape will begin playing where it left off.

To switch to the radio or CD player while a tape is playing, press the AM, FM or CD button. To change back to the cassette player, push the TAPE button.

Tape Search Functions
With a cassette playing, you can use the FF, REW, SKIP, or REPEAT function to find a desired program.

FF/REW — Fast Forward and Rewind move the tape rapidly. To rewind the tape, push the REW button. You will see REW in the display. To fast forward the tape, push the FF button. You will see FF displayed. Press the PLAY button to take the system out of rewind or fast forward. If the system reaches the end of the tape while in fast forward or rewind, it automatically stops that function, reverses direction, and begins to play.

SKIP — The SKIP function allows you to find the beginning of a song or passage. To skip to the beginning of a song or passage currently playing, push the ⊖ button. You will see REW flashing in the display as the tape rewinds. To skip to the beginning of the next song, push the ⊕ button. You will see FF flashing in the display as the tape fast forwards. When the system finds the beginning of a song or passage, it goes back to PLAY.

REPEAT — The Repeat function continuously replays the current song or passage. Press the REPEAT button to activate it; you will see REPEAT displayed as a reminder. When the system reaches the end of the song or passage currently playing, it will automatically go into rewind. When it senses the beginning of the same song or passage, the system returns to PLAY mode. It will continue to repeat this same program until you deactivate REPEAT by pressing the button again.

The SKIP and REPEAT functions use silent periods on the tape to find the end of a song or passage. These features may not work to your satisfaction if there is almost no gap between selections, a high noise level between selections, or a silent period in the middle of a selection.

Caring for Cassettes

Damaged cassettes can jam inside the drive or cause other problems. See page 168 for information on cassette care and protection.

Audio System

AM/FM/Cassette/CD Changer Audio System

On EX model in the U.S., and EX and EX-L models in Canada

Your Honda's audio system provides clear reception on both AM and FM bands, while the preset buttons allow you to easily select your favorite stations.

The cassette system features Dolby* noise reduction, automatic sensing of chromium-dioxide (CrO_2) tape, and autoreverse for continuous play.

* Dolby noise reduction manufactured under license from Dolby Laboratories Licensing Corporation. "DOLBY" and the double-D symbol DD are trademarks of Dolby Laboratories Licensing Corporation.

The in-dash CD changer holds up to six discs. You operate the CD changer with the same controls used for the radio. See page 169 for CD changer operation.

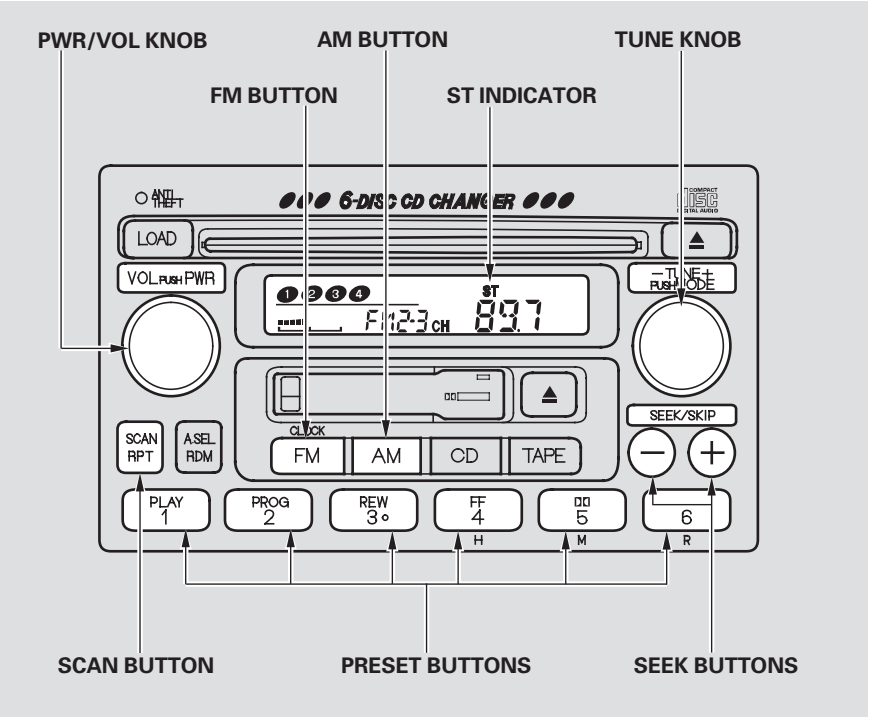

The anti-theft feature will disable the system if it is disconnected from the vehicle's battery. To get the system working again, you must enter a code number (see page 178).

Operating the Radio

The ignition switch must be in ACCESSORY (I) or ON (II) to operate the audio system. Turn the system on by pressing the PWR/VOL knob, or the AM or FM button. Adjust the volume by turning the knob.

The band and frequency that the radio was last tuned to is displayed. To change bands, press the AM or FM button. On the FM band, ST will be displayed if the station is broadcasting in stereo. Stereo reproduction on AM is not available.

You can use any of five methods to find radio stations on the selected band: TUNE, SEEK, SCAN, AUTO SELECT, and the preset buttons.

TUNE — Use the TUNE knob to tune the radio to a desired frequency. Turn the TUNE knob to the right to tune to a higher frequency, or to the left to tune to a lower frequency. Turn the knob right or left until the display reaches the desired frequency.

SEEK — The SEEK function searches the band for a station with a strong signal. To activate it, press either SEEK button (⊖ or ⊕), then release it. Depending on which SEEK button you press, the system scans upward or downward from the current frequency. It stops when it finds a station with a strong signal.

CONTINUED

Audio System

SCAN — The SCAN function samples all the stations with strong signals on the selected band. To activate it, press the SCAN button, then release it. You will see SCAN in the display. The system will scan up the band for a station with a strong signal. When it finds one, it will stop and play that station for approximately five seconds. If you do nothing, the system will then scan for the next strong station and play that for five seconds. When it plays a station that you want to continue listening to, press the SCAN button again.

Preset — You can store the frequencies of your favorite radio stations in the six preset buttons. Each button will store one frequency on the AM band, and two frequencies on the FM band.

To store a frequency:

1. Select the desired band, AM or FM. FM1 and FM2 let you store two frequencies with each preset button.

2. Use the TUNE, SEEK, or SCAN function to tune the radio to a desired station.

3. Pick the Preset button you want for that station. Press the button and hold it until you hear a beep.

4. Repeat steps 1 to 3 to store a total of six stations on AM and twelve on FM.

Once a station's frequency is stored, simply press and release the proper preset button to tune to it.

The preset frequencies will be lost if your vehicle's battery goes dead, is disconnected, or the radio fuse is removed.

AUTO SELECT — If you are traveling far from home and can no longer receive the stations you preset, you can use the Auto Select feature to find stations in the local area.

To activate Auto Select, press the A. SEL button. A. SEL will flash in the display, and the system will go into scan mode for several seconds. It automatically scans both bands, looking for stations with strong signals. It stores the frequencies of six AM stations and twelve FM stations in the preset buttons. You can then use the preset buttons to select those stations.

If you are in a remote area, Auto Select may not find six strong AM stations or twelve strong FM stations. If this happens, you will see a “0” displayed when you press any preset button that does not have a station stored.

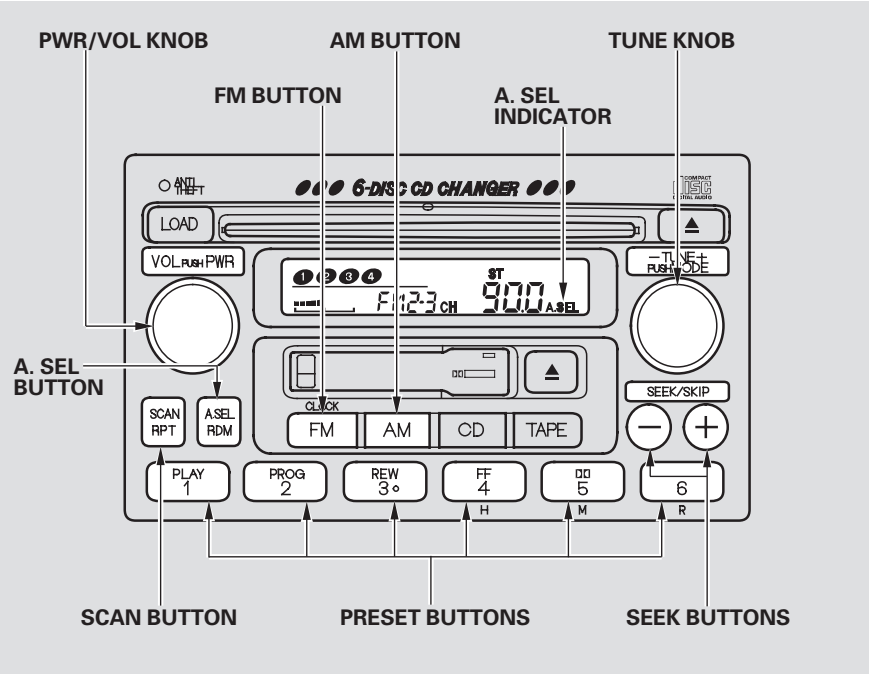

CONTINUED

Audio System

If you do not like the stations Auto Select has stored, you can store other frequencies in the preset buttons. Use the TUNE, SEEK, or SCAN function to find the desired frequencies, then store them in the selected preset buttons as described previously.

Auto Select does not erase the frequencies that you preset previously. When you return home, turn off Auto Select by pressing the A. SEL button. The preset buttons will then select the frequencies you originally set.

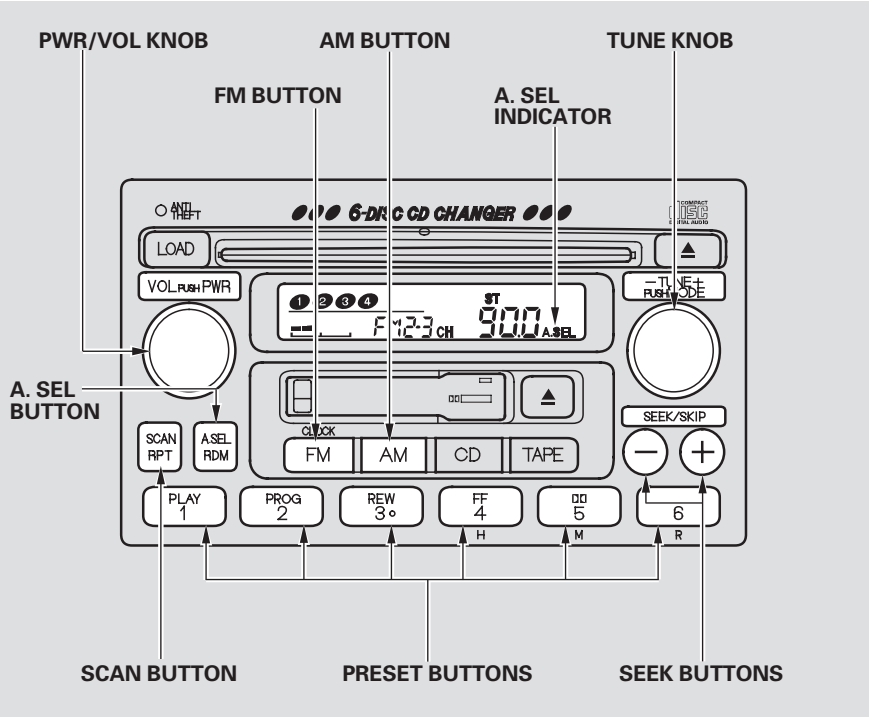

Adjusting the Sound

Bass, Treble, Balance, and Fader are each adjustable. You select which of these you want to adjust by pressing the TUNE knob. The mode changes from BAS to TRE to FAd to BAL, and then back to the selected audio mode, each time you press the TUNE knob.

Treble/Bass — Use these modes to adjust the tone to your liking. Select TRE or BAS by pressing the TUNE knob. Adjust the desired mode by turning the TUNE knob. The displayed number shows you the current setting. When the adjustment level reaches the center, you will see " C ".

Balance/Fader — These two modes adjust the strength of the sound coming from each speaker. BAL adjusts the side-to-side strength, while FAd adjusts the front-to-back strength.

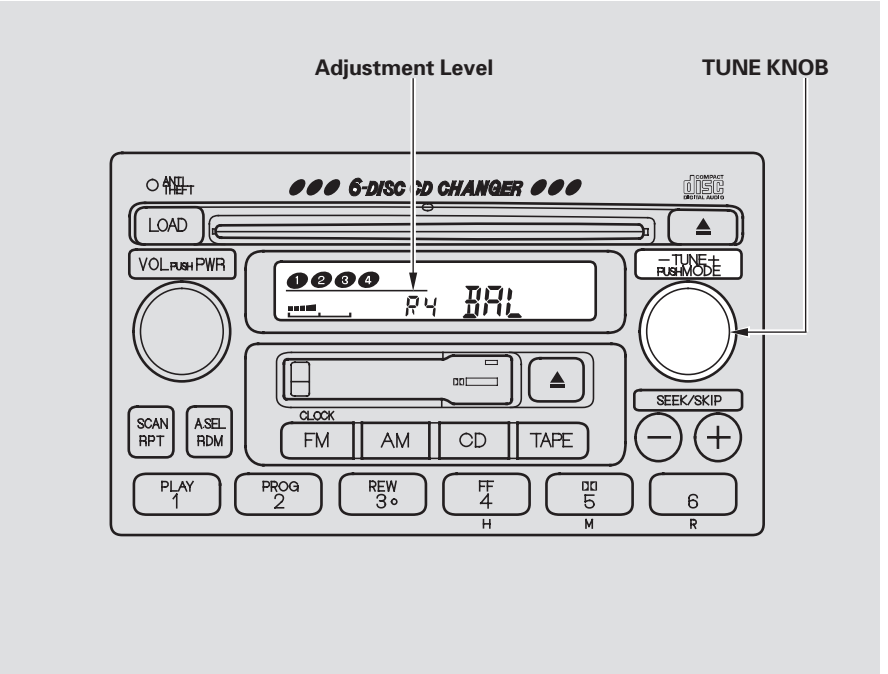

CONTINUED

Audio System

Select BAL or FAd by pressing the TUNE knob. Adjust the Balance or Fader to your liking by turning the TUNE knob. The displayed number shows you the current setting. When the adjustment level reaches the center, you will see " C ".

The system will automatically return the display to the selected audio mode about five seconds after you stop adjusting a mode with the MODE knob.

Audio System Lighting

You can use the instrument panel brightness control knob to adjust the illumination of the audio system (see page 77). The audio system illuminates when the parking lights are on, even if the radio is turned off.

Radio Frequencies

Your Honda's radio can receive the complete AM and FM bands. Those bands cover these frequencies:

AM band:
530 to 1,710 kilohertz
FM band:
87.7 to 107.9 megahertz

Radio stations on the AM band are assigned frequencies at least ten kilohertz apart (530, 540, 550). Stations on the FM band are assigned frequencies at least 0.2 megahertz apart (87.9, 88.1, 88.3).

Stations must use these exact frequencies. It is fairly common for stations to round-off the frequency in their advertising, so your radio could display a frequency of 100.9 even though the announcer may identify the station as "FM101."

Radio Reception

How well your Honda's radio receives stations is dependent on many factors, such as the distance from the station's transmitter, nearby large objects, and atmospheric conditions.

A radio station's signal gets weaker as you get farther away from its transmitter. If you are listening to an AM station, you will notice the sound volume becoming weaker, and the station drifting in and out. If you are listening to an FM station, you will see the stereo indicator flickering off and on as the signal weakens. Eventually, the stereo indicator will go off and the sound will fade completely as you get out of range of the station's signal.

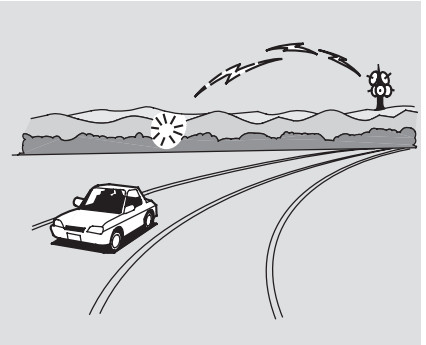

Driving very near the transmitter of a station that is broadcasting on a frequency close to the frequency of the station you are listening to can also affect your radio's reception. You may temporarily hear both stations, or hear only the station you are close to.

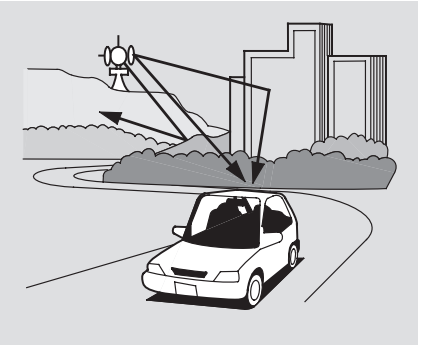

Radio signals, especially on the FM band, are deflected by large objects such as buildings and hills. Your radio then receives both the direct signal from the station's transmitter, and the deflected signal. This causes the sound to distort or flutter. This is a main cause of poor radio reception in city driving.

CONTINUED

Audio System

Radio reception can be affected by atmospheric conditions such as thunderstorms, high humidity, and even sunspots. You may be able to receive a distant radio station one day and not receive it the next day because of a change in conditions.

Electrical interference from passing vehicles and stationary sources can cause temporary reception problems.

As required by the FCC:
Changes or modifications not expressly approved by the party responsible for compliance could void the user's authority to operate the equipment.

Digital Clock

The audio system display usually shows the time when the ignition switch is in ACCESSORY (I) or ON (II). It shows the operation mode of the radio, cassette player, or CD changer when you operate them, then goes back to the time display after five seconds.

If an error occurs while operating the CD changer, the display will keep showing the error code and will not switch to the time display until the error is corrected (see page 177).

You can set the time only when the clock is displayed.

To set the time, press the CLOCK (FM) button until you hear a beep. The displayed time begins to blink.

Press and hold the H (Preset 4) button until the hour advances to the desired time.

Press and hold the M (Preset 5) button until the minutes advance to the desired time.

Press the CLOCK (FM) button again to enter the set time.

You can quickly set the time to the nearest hour. If the displayed time is before the half hour, the clock is set back to the previous hour by pressing the CLOCK (FM) button until you hear a beep, then pressing the R (Preset 6) button. If the displayed time is after the half hour, the clock is set forward to the beginning of the next hour.

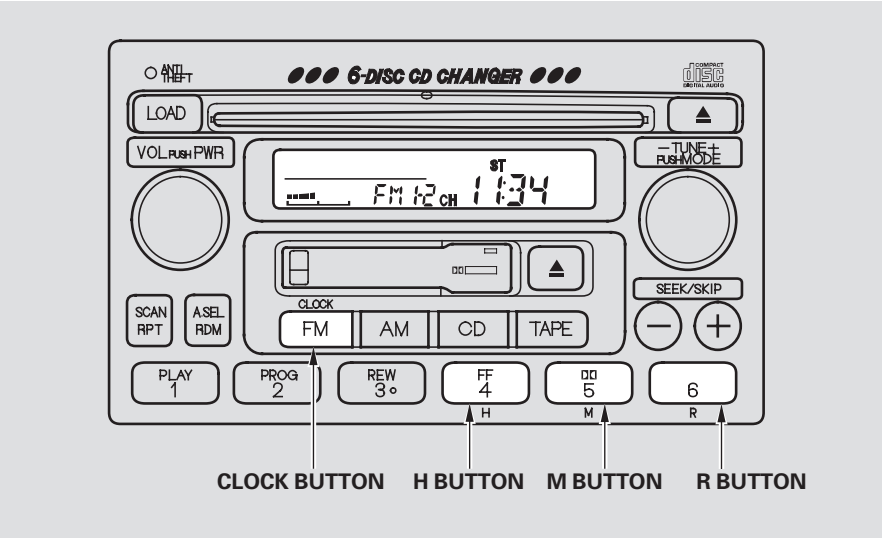

For example:
- 1:06 would RESET to 1:00
- 1:52 would RESET to 2:00

If your vehicle's battery is disconnected or goes dead, the time setting will be lost. To set the time again, follow the setting procedure.

Audio System

Operating the Cassette Player
The ignition switch must be in ACCESSORY (I) or ON (II).
Make sure the tape opening on the cassette is facing to the right, then insert the cassette most of the way into the slot. The system will pull it in the rest of the way, and begin to play.

The tape direction indicator will light to show you which side of the cassette is playing. The ▲ indicates the side you inserted facing upward is now playing. If you want to play the other side, press the PROG button.

Dolby noise reduction turns on when you insert a cassette. The DD indicator will light in the display. If the tape was not recorded with Dolby noise reduction, turn it off by pressing the DD button.

Noise reduction remains off until you turn it on by pressing the button again.

When the system reaches the end of the tape, it will automatically reverse direction and play the other side. If you want to remove the cassette from the drive, press the EJECT button.

You can remove the cassette with the ignition switch in any position, even if the audio system is turned off.

If you turn the system off while a tape is playing, either with the PWR/VOL knob or by turning off the ignition, the cassette will remain in the drive. When you turn the system back on, the tape will begin playing where it left off.

To switch to the radio or CD changer while listening to a tape, press the AM, FM or CD button. To change back to the cassette player, press the TAPE button.

Tape Search Functions

With a cassette playing, you can use the FF, REW, SKIP, or REPEAT function to find a desired program.

FF/REW — Fast Forward and Rewind move the tape rapidly. To rewind the tape, push the REW button. You will see REW in the display. To fast forward the tape, push the FF button. You will see FF displayed. Press the FF, REW or PLAY button to take the system out of rewind or fast forward. When the system reaches the end of the tape, it reverses direction and begins to play.

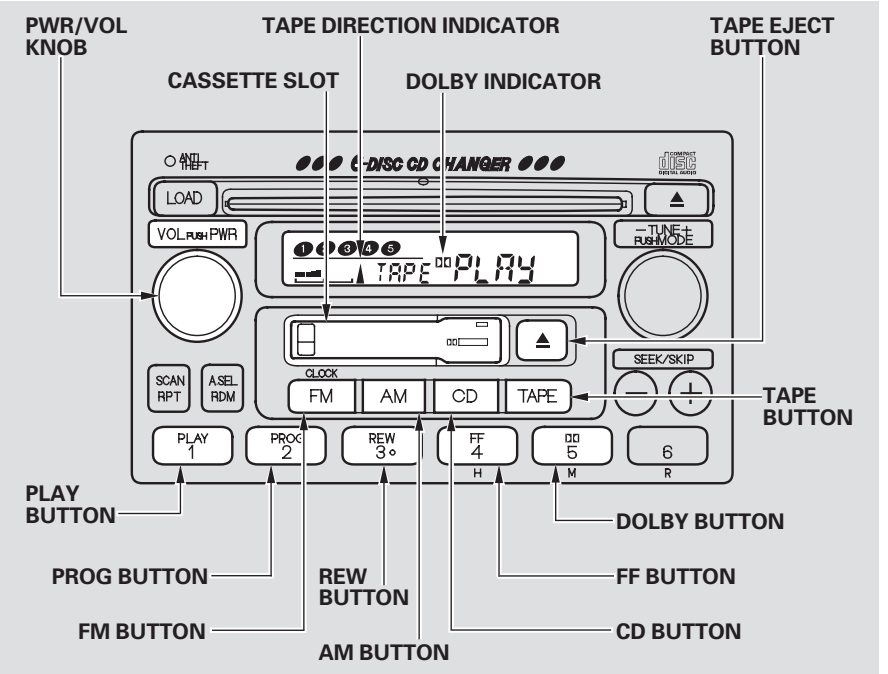

CONTINUED

SKIP — The SKIP function allows you to find the beginning of a song or passage. To skip to the beginning of a song or passage currently playing, push the ⊖ button. You will see REW flashing in the display as the tape rewinds. To skip to the beginning of the next song, push the ⊕ button. You will see FF flashing in the display as the tape fast forwards. When the system finds the beginning of a song or passage, it goes back to PLAY.

To stop the SKIP function before it finds the beginning of a song or passage, press either of the SKIP buttons (⊖ or ⊕).

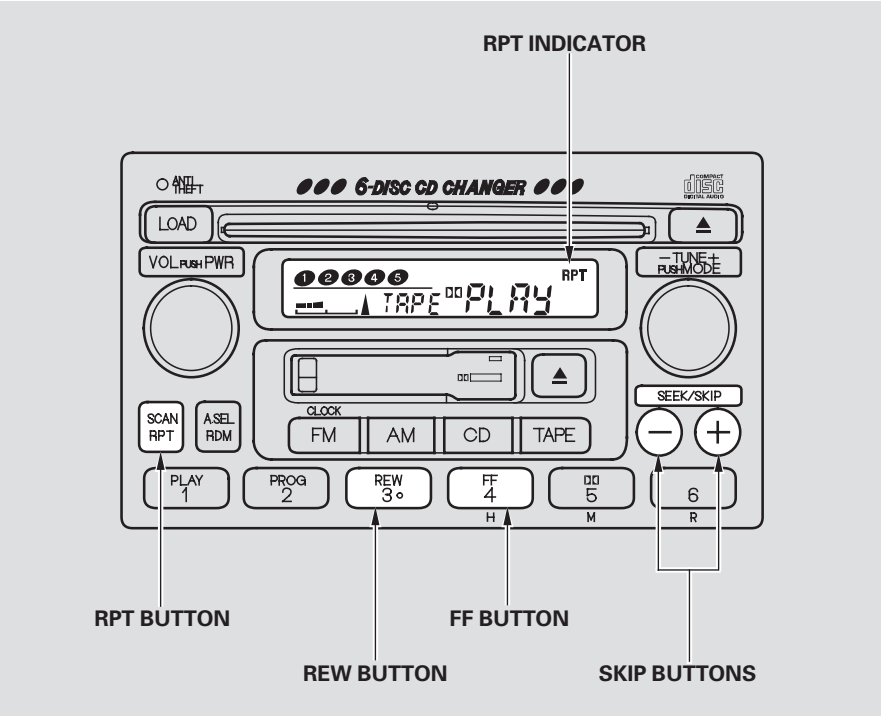

REPEAT — The Repeat function continuously replays the current song or passage. Press the RPT button to activate it; you will see RPT displayed as a reminder. When the system reaches the end of the song or passage currently playing, it will automatically go into rewind. When it senses the beginning of the same song or passage, the system returns to PLAY mode. It will continue to repeat this same program until you deactivate REPEAT by pressing the button again.
Pressing the REW or FF button, or either of the SKIP buttons, also turns off REPEAT.

The SKIP and REPEAT functions use silent periods on the tape to find the end of a song or passage. These features may not work to your satisfaction if there is almost no gap between selections, a high noise level between selections, or a silent period in the middle of a selection.

Audio System

Caring for the Cassette Player
The cassette player picks up dirt and oxides from the tape. This contamination builds up over time and causes the sound quality to degrade. To prevent this, you should clean the player after every 30 hours of use. Your dealer has a cleaning kit available.

If you do not clean the cassette player regularly, it may eventually become impossible to remove the contamination with a normal cleaning kit.

Use 100-minute or shorter cassettes. Cassettes longer than that use thinner tape that may break or jam the drive.

Look at the cassette before you insert it. If the tape is loose, tighten it by turning a hub with a pencil or your finger.

If the label is peeling off, remove it from the cassette or it could cause the cassette to jam in the player. Never try to insert a warped or damaged cassette in the player.

When they are not in use, store cassettes in their cases to protect them from dust and moisture. Never place cassettes where they will be exposed to direct sunlight, high heat, or high humidity. If a cassette is exposed to extreme heat or cold, let it reach a moderate temperature before inserting it in the player.

Never try to insert foreign objects into the cassette player.

If you see the error indication "TAPE ERR" on U.S. EX, and Canadian EX and EX-L models/" TAPEr " on LX model on the display, press the TAPE EJECT button to remove the cassette from the unit. Make sure the tape is not damaged. If the cassette will not eject or the error indication stays on after the cassette ejects, take the vehicle to your Honda dealer.

Operating the CD Changer

Your Honda's audio system has an in-dash CD changer that holds up to six discs, providing several hours of continuous entertainment. You operate this CD changer with the same controls used for the radio and cassette player.

To load CDs or operate the CD changer, the ignition switch must be in ACCESSORY (I) or ON (II).

Load and play only standard round discs. Odd-shaped CDs may jam in the drive or cause other problems. You cannot load and play 3-inch (8-cm) discs in this system.

For best results when using CD-R discs, use only high quality discs labeled for audio use. When recording a CD-R, the recording must be closed in order for the disc to be used by CD players. CD-RW discs will not work in this unit.

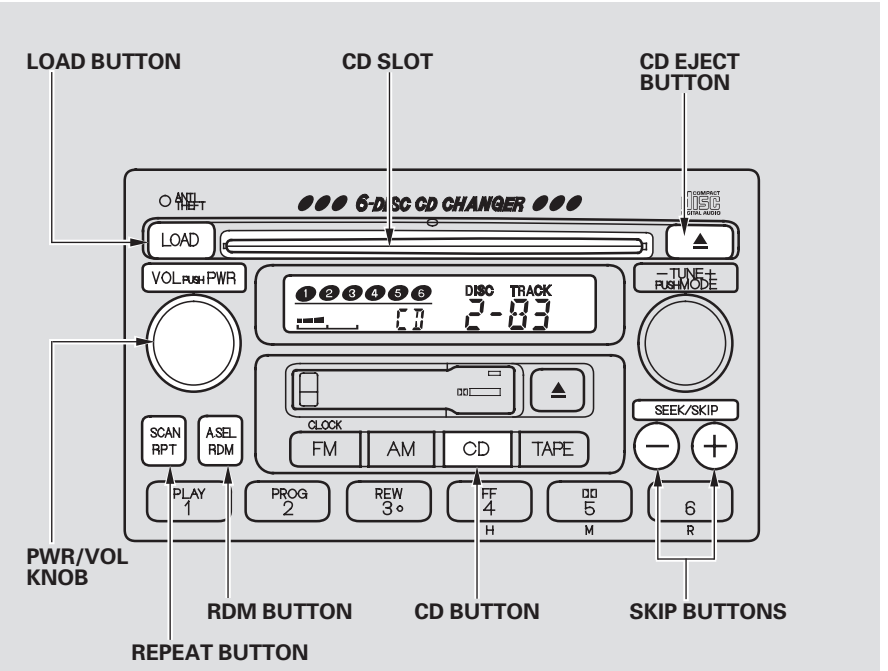

CONTINUED

Audio System

Loading CDs in the Changer
To load multiple CDs in one operation:

1. Press and hold the LOAD button until you hear a beep and see "LOAd" in the upper display, then release the button.

2. On the upper left side of the display, the disc number for an empty position will begin blinking and the green CD Loaded indicator will come on.

3. Insert the disc into the CD slot. Insert it only about halfway, the drive will pull it in the rest of the way. You will see BUSY in the display. The CD loaded indicator turns red and blinks as the CD is loaded.

4. When LOAd appears again in the display, insert the next disc into the CD slot.

5. Repeat this until all six positions are loaded. The system will then begin playing the last CD loaded.

If you are not loading CDs into all six positions, press the Load button again after the last CD has loaded. The system will begin playing the last CD loaded.

If you stop loading CDs before all six positions are filled, and you do not press the LOAD button, the system will wait for ten seconds, then stop the load operation and begin playing the last CD loaded.

To load a single CD:

1. Press and release the LOAD button.

2. The disc number for an empty position starts to blink and the green CD Loaded indicator comes on. When you see LOAd in the display, insert the disc into the CD slot. Insert it only about halfway; the drive will pull it in the rest of the way.

3. The system will load the CD, and begin playing it.

If you press the LOAD button while a CD is playing, the system will stop playing that CD and start the loading sequence. It will then play the CD just loaded.

You can also load a CD into an empty position while a CD is playing by pressing the appropriate preset button. Select an empty position (the disc number indicator is off), and press the preset button for that position (1 to 6). The system will stop playing the current CD and start the loading sequence. It will then play the CD just loaded.

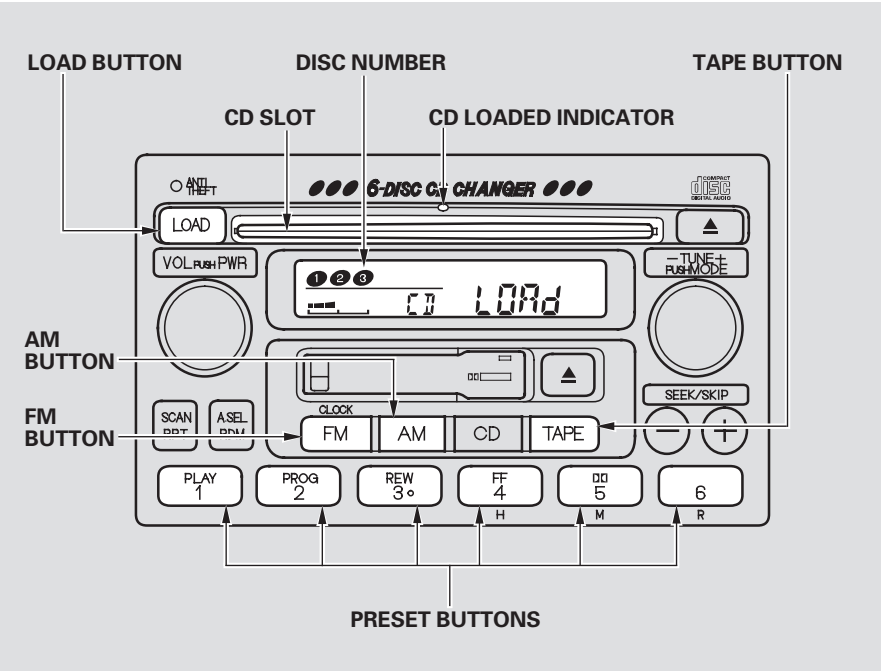

CONTINUED

Operation

Select the CD changer by pressing the CD button. You will see "CD" in the display. The system will begin playing the last selected disc in the CD changer. You will see the disc and track numbers displayed.

When that disc ends, the next disc in the CD changer is loaded and played. After the last disc finishes, the system returns to disc 1.

To select a different disc, press the appropriate Preset button (1 – 6). If you select an empty position in the CD changer, the system will go into the loading sequence (see page 170).

You can use the SKIP buttons while a disc is playing to select passages and change tracks.

To move rapidly within a track, press and hold the appropriate SKIP button. Press the ⊕ button to move forward. You will see CUE displayed. To move backward, press the ⊖ button. You will see REW displayed. Release the button when the system reaches the point you want.

Each time you press the ⊕ button and release it, the system skips forward to the beginning of the next track. Press and release the ⊖ button to skip backward to the beginning of the current track. Press and release it again to skip to the beginning of the previous track.

REPEAT – To activate the Repeat feature, press and release the RPT button. You will see RPT in the display as a reminder. The system continuously replays the current track. Press the RPT button again to turn it off. Pressing either of the SKIP buttons also turns off the repeat feature.

RANDOM PLAY – This feature, when activated, plays the tracks within a CD in random order, rather than in the order they are recorded on the CD. To activate Random Play, press the RDM button. You will see RDM in the display. The system will then select and play tracks randomly. This continues until you deactivate Random Play by pressing the RDM button again, or you select a different CD with a preset button.

To take the system out of CD mode, press the AM or FM button, or insert a cassette in the player. If a tape is already in the cassette player, press the TAPE button. When you return to CD mode by pressing the CD button, play will continue at the same point that it left off.

If you turn the system off while a CD is playing, either with the PWR/VOL knob or the ignition switch, play will continue at the same point when you turn it back on.

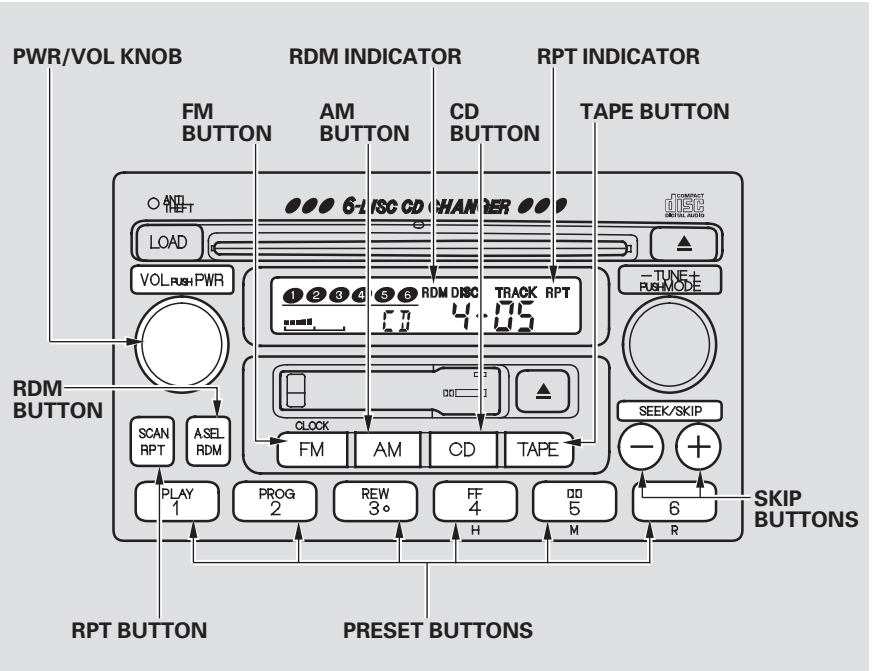

CONTINUED

Removing CDs from the Changer
To remove the disc that is currently playing, press the Eject button. You will see “EJEC” in the display. When you remove the disc from the slot, the system automatically begins the Load sequence so you can load another CD in that position. If you do not load another CD, the system goes back to the time display. If you selected radio or tape mode before removing the disc, the system selects the previous mode (AM, FM, or Tape).

If you do not remove the disc from the slot, the system will reload the disc after 15 seconds and put the CD changer in pause mode. To begin playing the disc, press the CD button.

To remove a different CD from the changer, first select it with the appropriate preset button. When that CD begins playing, press the eject button.

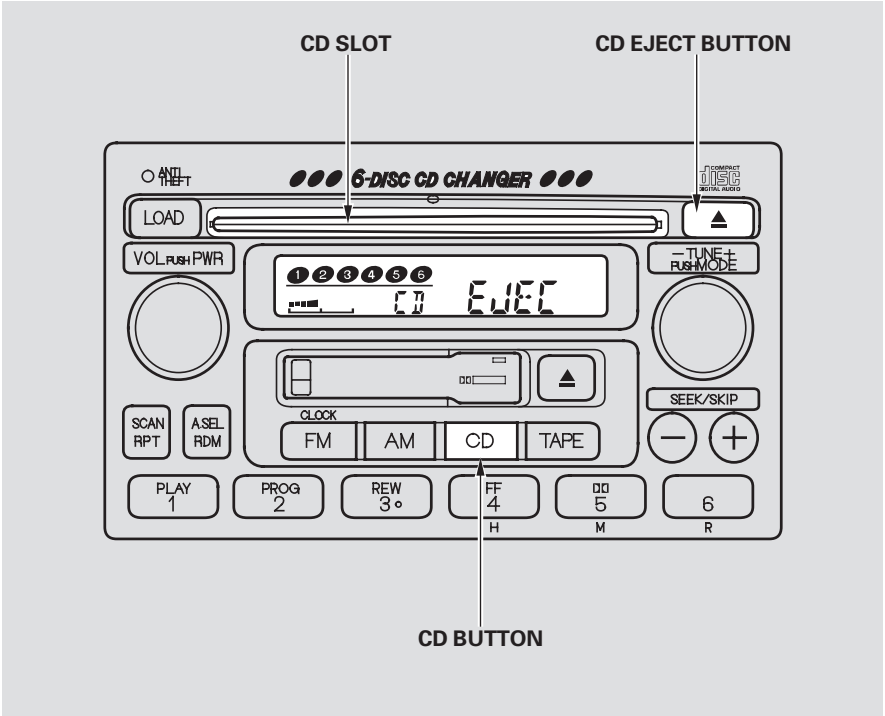

If you press the Eject button while listening to the radio or tape, or with the audio system turned off, the disc that was last selected is ejected. After that disc is ejected, pressing the Eject button again will eject the next disc in the numerical order. By doing this six times, you can remove all the CDs from the changer.

In any mode, if you press the eject button and hold it until you hear a beep, the system will eject all of the discs in the changer.

You can also eject discs when the ignition switch is off. The disc that was last selected is ejected first. You can eject up to six discs, one at a time.

Protecting Compact Discs

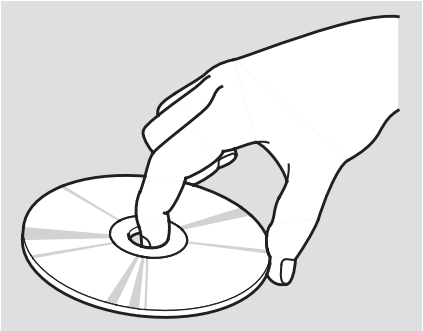

Handle a CD by its edges; never touch either surface. Do not place stabilizer rings or labels on the CD. These and contamination from fingerprints, liquids, and felt-tip pens can cause the CD to not play properly, or possibly jam in the drive.

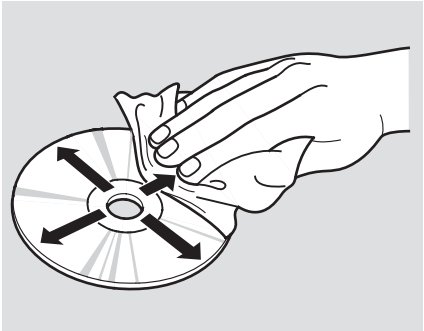

When a CD is not being played, store it in its case to protect it from dust and other contamination. To prevent warpage, keep CDs out of direct sunlight and extreme heat.

To clean a disc, use a clean soft cloth. Wipe across the disc from the center to the outside edge.

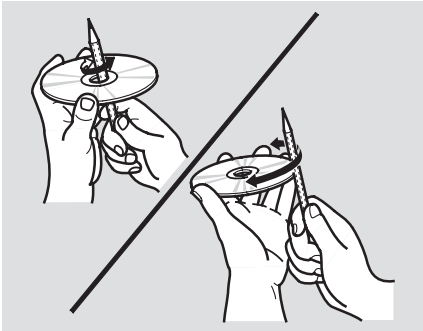

A new CD may be rough on the inner and outer edges. The small plastic pieces causing this roughness can flake off and fall on the recording surface of the disc, causing skipping or other problems. Remove these pieces by rubbing the inner and outer edges with the side of a pencil or pen.

Never try to insert foreign objects in the CD player or the magazine.

CD Changer Error Indications

If you see an error indication in the display while operating the CD changer, find the cause in the chart to the right. If you cannot clear the error indication, take the vehicle to your Honda dealer.

Indication	Cause	Solution
CD DISC	FOCUS Error	Press the CD eject button and pull out the CDs, check for error indication. Insert the CDs again. If the code does not disappear or the CD cannot be pulled out, consult your Honda dealer.
CD ERR	Mechanical Error	Press the CD eject button and pull out the CDs, check for error indication. Insert the CD again. If the code does not disappear or the CD cannot be pulled out, consult your Honda dealer.
CD EJEC	No CD in the CD changer	Insert CD magazine.

Audio System

Theft Protection

Your vehicle's audio system will disable itself if it is disconnected from electrical power for any reason. To make it work again, the user must enter a specific five-digit code in the Preset buttons. Because there are hundreds of number combinations possible from five digits, making the system work without knowing the exact code is nearly impossible.

You should have received a card that lists your audio system's code number and serial number. It is best to store this card in a safe place at home. In addition, you should write the audio system's serial number in this Owner's Manual. If you should happen to lose the card, you must obtain the code number from your Honda dealer. To do this, you will need the system's serial number.

If your vehicle's battery is disconnected or goes dead, or the radio fuse is removed, the audio system will disable itself. If this happens, you will see " CODE " in the frequency display the next time you turn on the system. Use the Preset buttons to enter the five-digit code. If it is entered correctly, the radio will start playing.

If you make a mistake entering the code, do not start over or try to correct your mistake. Complete the five-digit sequence, then enter the correct code. You have ten tries to enter the correct code. If you are unsuccessful in ten attempts, you must then leave the system on for one hour before trying again.

You will have to store your favorite stations in the Preset buttons after the system begins working. Your original settings were lost when power was disconnected.

Cruise Control

Cruise control allows you to maintain a set speed above 25 mph (40 km/h) without keeping your foot on the accelerator pedal. It should be used for cruising on straight, open highways. It is not recommended for conditions such as city driving, winding roads, slippery roads, heavy rain, or bad weather. You should have full control of the vehicle under those conditions.

⚠ WARNING

Improper use of the cruise control can lead to a crash.

Use the cruise control only when traveling on open highways in good weather.

Using the Cruise Control

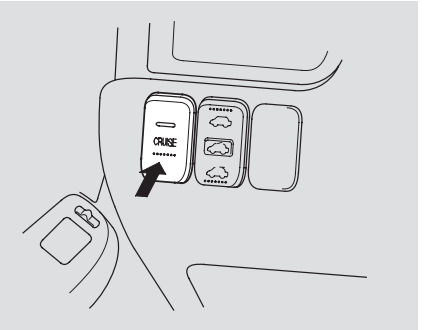

1. Push in the Cruise Control Master Switch to the left of the steering column. The indicator in the switch will light.

2. Accelerate to the desired cruising speed above 25 mph (40 km/h).

CONTINUED

Cruise Control

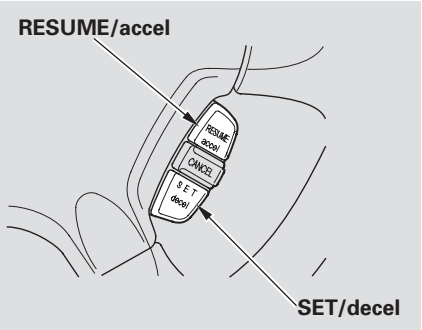

3. Press and release the SET/decel button on the steering wheel. The CRUISE CONTROL light on the instrument panel comes on to show the system is now activated.

The cruise control may not hold the set speed when you are going up and down hills. If your speed increases going down a hill, use the brakes to slow down to the desired speed. This will cancel the cruise control. To resume the set speed, press the RESUME/accel button. The CRUISE CONTROL light on the instrument panel comes on.

When climbing a steep hill, the automatic transmission may downshift to hold the set speed.

Changing the Set Speed

You can increase the set cruising speed in any of these ways:

- Press and hold the RESUME/accel button. The vehicle will accelerate. When you reach the desired cruising speed, release the button.
- To increase your speed in very small amounts, tap the RESUME/accel button repeatedly. Each time you do this, your vehicle will speed up about 1 mph (1.6 km/h).
- Push on the accelerator pedal. Accelerate to the desired cruising speed and press the SET/decel button.

You can decrease the set cruising speed in any of these ways:

- Press and hold the SET/decel button. The vehicle will decelerate. Release the button when you reach the desired speed.
- To slow down in very small amounts, tap the SET/decel button repeatedly. Each time you do this, your vehicle will slow down about 1 mph (1.6 km/h).
- Tap the brake or clutch pedal lightly with your foot. The CRUISE CONTROL light on the instrument panel will go out. When the vehicle slows to the desired speed, press the SET/decel button. The vehicle will then maintain the desired speed.

Even with the cruise control turned on, you can still use the accelerator pedal to speed up for passing. After completing the pass, take your foot off the accelerator pedal. The vehicle will return to the set cruising speed.

Resting your foot on the brake or clutch pedal will cause the cruise control to cancel.

Cancelling the Cruise Control

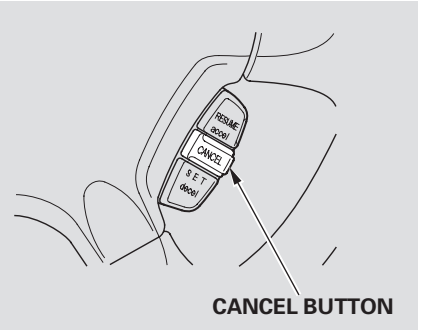

You can cancel the cruise control in any of these ways:

- Tap the brake or clutch pedal.
- Push the CANCEL button on the steering wheel.
- Press the Cruise Control Master Switch.

CONTINUED

Cruise Control

When you push the CANCEL button, or tap the brake or clutch pedal, the CRUISE CONTROL light on the instrument panel will go out and the vehicle will begin to slow down. You can use the accelerator pedal in the normal way.

The system remembers the previously-set cruising speed. To return to that speed, accelerate to above 25 mph (40 km/h), then press the RESUME/accel button. The CRUISE CONTROL light comes on, and the vehicle will accelerate to the same cruising speed as before.

Pressing the Cruise Control Master Switch turns the system completely off and erases the previous cruising speed from memory. To use the system again, refer to ***Using the Cruise Control***.

Before Driving

Before you begin driving your Honda, you should know what gasoline to use, and how to check the levels of important fluids. You also need to know how to properly store luggage or packages. The information in this section will help you. If you plan to add any accessories to your vehicle, please read the information in this section first.

Break-in Period 184
Gasoline 184
Service Station Procedures 185
Filling the Fuel Tank..... 185
Opening the Hood 186
Oil Check..... 188
Engine Coolant Check 189
Fuel Economy 190
Vehicle Condition 190
Driving Habits..... 190
Accessories and Modifications 191
Carrying Cargo 193

Break-in Period, Gasoline

Break-in Period

Help assure your vehicle's future reliability and performance by paying extra attention to how you drive during the first 600 miles (1,000 km). During this period:

- Avoid full-throttle starts and rapid acceleration.
- Avoid hard braking. New brakes need to be broken-in by moderate use for the first 200 miles (300 km).
- Do not change the oil until the recommended time or mileage interval shown in the maintenance schedule.

You should follow these same recommendations with an overhauled or exchanged engine, or when the brakes are relined.

Gasoline

Your Honda is designed to operate on unleaded gasoline with a pump octane number of 86 or higher. Use of a lower octane gasoline can cause a persistent, heavy metallic rapping noise in the engine that can lead to mechanical damage.

We recommend gasolines containing detergent additives that help prevent fuel system and engine deposits.

Using gasoline containing lead will damage your vehicle's emissions controls. This contributes to air pollution.

In Canada, some gasolines contain an octane-enhancing additive called MMT. If you use such gasolines, your emission control system performance may deteriorate and the Malfunction Indicator Lamp on your instrument panel may turn on. If this happens, contact your authorized Honda dealer for service.

Filling the Fuel Tank

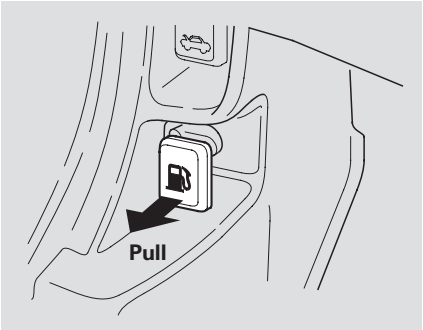

1. Because the fuel fill cap is on the driver's side of the vehicle, park with that side closest to the service station pumps.

2. Open the fuel fill door by pulling on the handle located under the lower left corner of the dashboard.

⚠ WARNING

Gasoline is highly flammable and explosive. You can be burned or seriously injured when handling fuel.

- Stop the engine and keep heat, sparks, and flame away.
- Handle fuel only outdoors.
- Wipe up spills immediately.

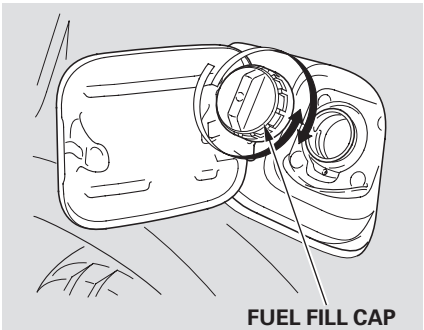

3. Remove the fuel fill cap slowly. You may hear a hissing sound as pressure inside the tank escapes.

4. Stop filling the tank after the fuel nozzle automatically clicks off. Do not try to "top off" the tank, leave some room for the fuel to expand with temperature changes.

   Your vehicle has an on-board refueling vapor recovery system to help keep fuel vapors from going into the atmosphere. If the fuel nozzle keeps clicking off even though the tank is not full, there may be a problem with this system. Consult your dealer.

CONTINUED

Service Station Procedures

5. Screw the fuel fill cap back on, tighten it until it clicks several times. If you do not properly tighten the cap, the Malfunction Indicator Lamp may come on (see page 327).

6. Push the fuel fill door closed until it latches.

Opening the Hood

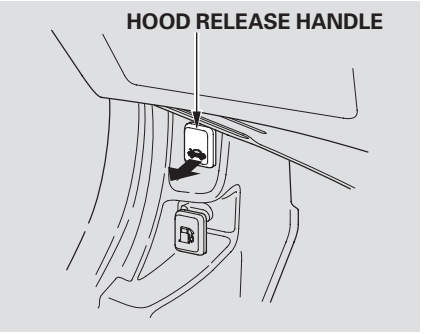

1. Shift to Park or Neutral and set the parking brake. Pull the hood release handle located under the lower left corner of the dashboard. The hood will pop up slightly.

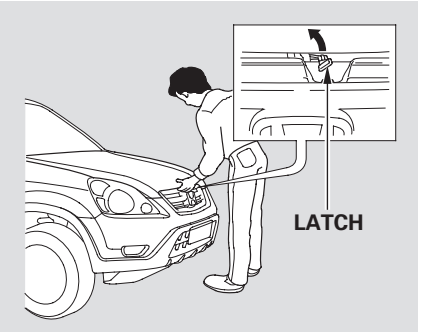

2. Standing in front of the vehicle, put your fingers between the front edge of the hood and the front grille. The hood latch handle is above the “H” logo. Push this handle up until it releases the hood. Lift the hood.

If you can open the hood without lifting the hood latch handle, or the hood latch handle moves stiffly or does not spring back as before, the mechanism should be cleaned and lubricated (see page 266).

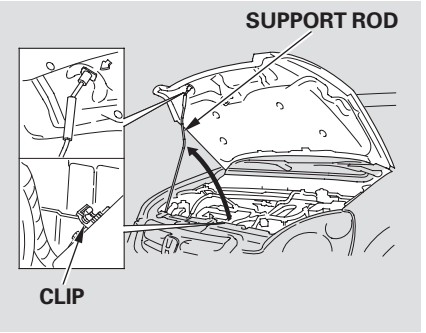

3. Pull the support rod out of its clip and insert the end into the hole in the hood.

To close the hood, lift it up slightly to remove the support rod from the hole. Put the support rod back into its holding clip. Lower the hood to about a foot (30 cm) above the fender, then let it drop.

After closing the hood, make sure it is securely latched.

CONTINUED

Service Station Procedures

Oil Check

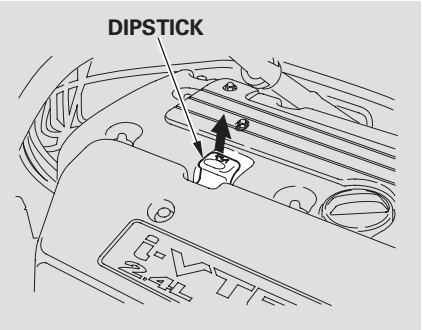

Check the engine oil level every time you fill the vehicle with fuel. Wait a few minutes after turning the engine off before you check the oil.

1. Remove the dipstick (orange handle).

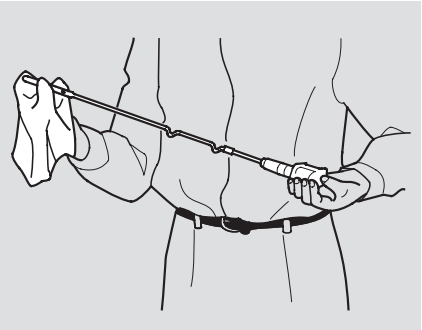

2. Wipe the dipstick with a clean cloth or paper towel.

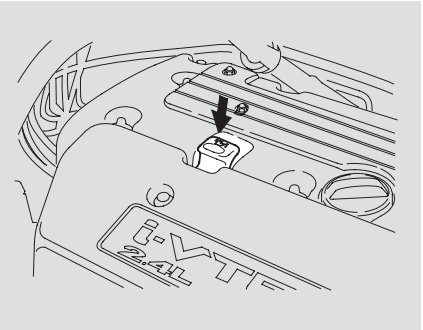

3. Insert it all the way back in its tube.

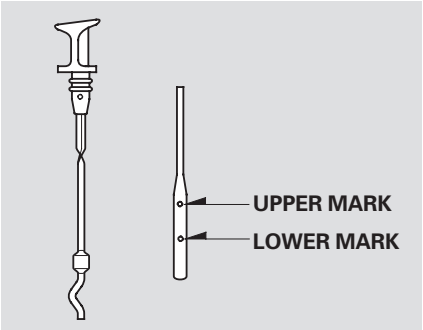

4. Remove the dipstick again and check the level. It should be between the upper and lower marks.

If it is near or below the lower mark, see **Adding Oil** on page 247 .

Engine Coolant Check

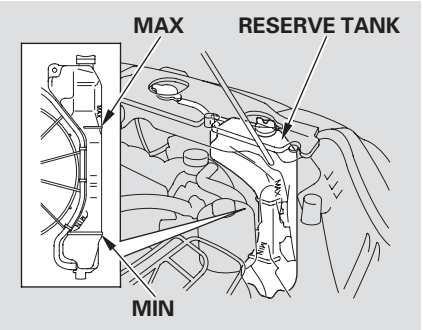

Look at the coolant level in the radiator reserve tank. Make sure it is between the MAX and MIN lines. If it is below the MIN line, see **Adding Engine Coolant** on page 251 for information on adding the proper coolant.

Refer to **Owner Maintenance Checks** on page 245 for information on checking other items in your Honda.

Fuel Economy

The condition of your vehicle and your driving habits are the two most important things that affect the fuel mileage you get.

Vehicle Condition
Always maintain your vehicle according to the maintenance schedule. This will keep it in top operating condition.

An important part of that maintenance is the **Owner Maintenance Checks** (see page 245). For example, an underinflated tire causes more "rolling resistance," which uses fuel. It also wears out faster, so check the tire pressure at least monthly.

In winter, the build-up of snow on your vehicle's underside adds weight and rolling resistance. Frequent cleaning helps your fuel mileage and reduces the chance of corrosion.

Driving Habits
You can improve fuel economy by driving moderately. Rapid acceleration, abrupt cornering, and hard braking use more fuel.

Always drive in the highest gear that allows the engine to run and accelerate smoothly.

Depending on traffic conditions, try to maintain a constant speed. Every time you slow down and speed up, your vehicle uses extra fuel. Use the cruise control, when appropriate, to increase fuel economy.

A cold engine uses more fuel than a warm engine. It is not necessary to "warm-up" a cold engine by letting it idle for a long time. You can drive away in about a minute, no matter how cold it is outside. The engine will warm up faster, and you get better fuel economy. To cut down on the number of "cold starts," try to combine several short trips into one.

The air conditioning puts an extra load on the engine which makes it use more fuel. Turn off the A/C to cut down on air conditioning use. Use the flow-through ventilation when the outside air temperature is moderate.

Accessories and Modifications

Modifying your vehicle, or installing some non-Honda accessories, can make your vehicle unsafe. Before you make any modifications or add any accessories, be sure to read the following information.

Accessories
Your dealer has Honda accessories that allow you to personalize your vehicle. These accessories have been designed and approved for your vehicle, and are covered by warranty.

Non-Honda accessories are usually designed for universal applications. Although aftermarket accessories may fit on your vehicle, they may not meet factory specifications, and could adversely affect your vehicle's handling and stability. (See "Modifications" on page 192 for additional information.)

⚠ WARNING

Improper accessories or modifications can affect your vehicle's handling, stability, and performance, and cause a crash in which you can be hurt or killed.

Follow all instructions in this owner's manual regarding accessories and modifications.

When properly installed, cellular phones, alarms, two-way radios, and low-powered audio systems should not interfere with your vehicle's computer-controlled systems, such as the SRS and anti-lock brake system.

However, if electronic accessories are improperly installed, or exceed your vehicle's electrical system capacity, they can interfere with the operation of your vehicle, or even cause the airbags to deploy.

Before installing any accessory:

- Make sure the accessory does not obscure any lights, or interfere with proper vehicle operation or performance.
- Be sure electronic accessories do not overload electrical circuits (see page 331).
- Have the installer contact your Honda dealer for assistance before installing any electronic accessory.

If possible, have your dealer inspect the final installation.

Modifications
Removing parts from your vehicle, or replacing components with non-Honda (aftermarket) components could seriously affect your vehicle's handling, stability, and reliability.

Some examples are:
- Lowering the vehicle with an aftermarket suspension kit that significantly reduces ground clearance can allow the undercarriage to impact speed bumps or other raised objects, which could cause the airbags to deploy.
- Raising the vehicle with an aftermarket suspension kit can affect the handling and stability.
- Aftermarket wheels, because they are a universal design, can cause excessive stress on suspension components.
- Larger or smaller wheels and tires can interfere with the operation of your vehicle's anti-lock brakes and other systems.

Do not modify your steering wheel or any other part of your Supplemental Restraint System. Modifications could make the system ineffective.

If you plan to modify your vehicle, consult with your Honda dealer.

Additional Safety Precautions
- ***Do not attach or place objects on the front airbag covers.*** Any object attached to or placed on the covers marked "SRS AIRBAG," in the center of the steering wheel and on top of the dashboard, could interfere with the proper operation of the airbags. Or, if the airbags inflate, the objects could be propelled inside the vehicle and hurt someone.

Only on models equipped with side airbags
- ***Do not attach hard objects on or near a front door.*** If a side airbag inflates, a cup holder or other hard object attached on or near the door could be propelled inside the vehicle and hurt someone.
- ***Do not place any objects over the outside edge of a front seat-back.*** Covering the outside edge of a front seat-back, with a non-Honda seat cover for example, could prevent the airbag from inflating properly.

Carrying Cargo

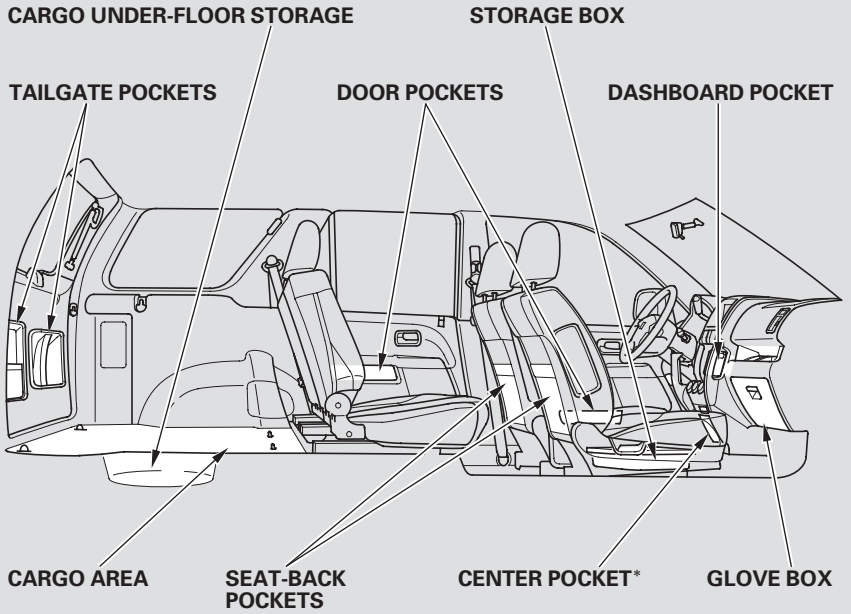

* A/T model only

Your vehicle has several convenient storage areas so you can stow cargo safely.

The glove box, and the pockets in the doors and seat-backs, are designed for small, lightweight items. The cargo area is intended for larger, heavier items. In addition, the back seats can be folded to allow you to carry more cargo or longer items.

However, carrying too much cargo, or improperly storing it, can affect your vehicle's handling, stability, and operation, and make it unsafe. Before carrying any type of cargo, be sure to read the following pages.

Carrying Cargo

Load Limit

The maximum load limit for your car is 850 lbs (395 kg).
This figure includes the total weight of all occupants, cargo, accessories, and the tongue weight if you are towing a trailer.

Following are the steps for determining the correct cargo and luggage load limit.

1. Locate the statement, "the combined weight of occupants and cargo should never exceed 850 lbs (395 kg)" on your vehicle's placard (on the driver's doorjamb).

2. Determine the combined weight of the driver and passengers that will be riding in your vehicle. (Five is the seating capacity of your vehicle.)

3. Subtract the combined weight of the driver and passengers from 850 lbs (395 kg).

4. The resulting figure equals the available amount of cargo and luggage load capacity.

For example, if there will be four 150 lbs (70 kg) occupants in your vehicle, the amount of available cargo and luggage load capacity is 250 lbs (115 kg).
4 × 150 lbs (70 kg) = 600 lbs (280 kg)
850 lbs (395 kg) − 600 lbs (280 kg) = 250 lbs (115 kg)

5. Determine the combined weight of accessories, luggage, and cargo being loaded in the vehicle. The weight may not safely exceed the available cargo and luggage load capacity calculated in step 4 [250 lbs (115 kg) in this example].

⚠ WARNING

Overloading or improper loading can affect handling and stability and cause a crash in which you can be hurt or killed.

Follow all load limits and other loading guidelines in this manual.

6. If your vehicle will be towing a trailer, load from your trailer will be transferred to your vehicle. Consult this manual to determine how this reduces the available cargo and luggage load capacity of your vehicle.

Carrying Cargo in the Cargo Area or on a Roof Rack

- Distribute cargo evenly on the floor of the cargo area, placing the heaviest items on the bottom and as far forward as possible. Tie down items that could be thrown about the vehicle during a crash or sudden stop.

- If you carry large items that prevent you from closing the tailgate or the hatch glass, exhaust gas can enter the passenger area. To avoid the possibility of **carbon monoxide poisoning**, follow the instructions on page 60 .

- If you can carry any items on a roof rack, be sure the total weight of the rack and the items does not exceed the maximum allowable weight. Please contact your Honda dealer for further information.

If you use an accessory roof rack, the roof rack weight limit may be lower. Refer to the information that came with your roof rack.

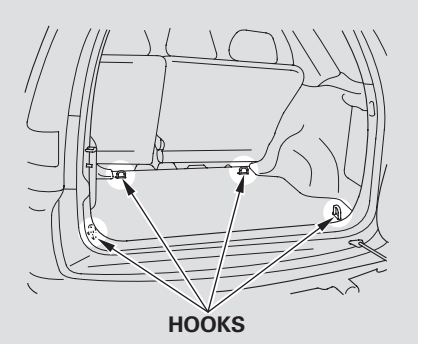

To secure cargo, use the four floor hooks in the cargo area. Make sure all stored items are secured before driving.

CONTINUED

Carrying Cargo

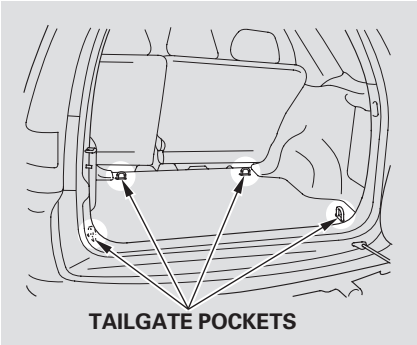

To secure cargo, use the four floor hooks in the cargo area. Make sure all stored items are secured before driving.

Tailgate Pockets

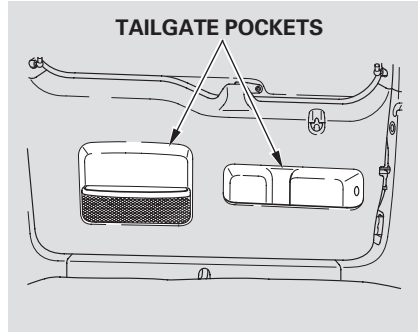

Store only small, lightweight items in the pockets on the back of the tailgate.

Driving

This section gives you tips on starting the engine under various conditions, and how to operate the 5-speed manual and automatic transmissions. It also includes important information on parking your vehicle, the braking system, and facts you need if you are planning to tow a trailer or drive off-highway.

Driving Guidelines 198
Preparing to Drive 199
Starting the Engine 200
Starting in Cold Weather at High Altitude 201
5-speed Manual Transmission 202
Recommended Shift Points 203
Engine Speed Limiter 203
Automatic Transmission 204
Shift Lever Position Indicator .. 204
Shift Lever Positions 205
Engine Speed Limiter 208
Shift Lock Release 209
Parking 210
The Braking System 211
Brake Wear Indicators 211
Brake System Design 212
Anti-lock Brakes 212
Important Safety Reminders 213
ABS Indicator 214
Driving in Bad Weather 215
Towing a Trailer 217
Towing Your Vehicle Behind a Motorhome 224
Off-Highway Guidelines 226
General Information 226
Important Safety Precautions .. 227
Driving Tips 228

Driving Guidelines

Your CR-V has higher ground clearance than a passenger vehicle designed only for use on pavement. Higher ground clearance has many advantages for off-highway driving. It allows you to travel over bumps and unpaved roads. It also provides good visibility so you can anticipate problems earlier.

These advantages come at some cost. Because your vehicle is taller and rides higher off the ground, it has a high center of gravity. This means that your vehicle can tip or roll over if you make abrupt turns. Utility vehicles have a significantly higher rollover rate than other types of vehicles.

To prevent the risk of rollover or loss of control:

- Take corners at slower speeds than you would with a passenger vehicle.
- Avoid sharp turns and abrupt maneuvers whenever possible.
- Do not modify your vehicle in any way that would raise the center of gravity.
- Do not carry heavy cargo on the roof.

Four-wheel Drive Models

Your CR-V is equipped with a unique four-wheel drive (4WD) system. Normally, power is delivered only to the front wheels. When the system senses a loss of front-wheel traction, it automatically transfers some power to the rear wheels. This gives you better traction and mobility.

While this system can provide increased traction on slippery surfaces, you still need to exercise the same care when accelerating, steering, and braking that you would in a two-wheel drive vehicle.

See page 226 for additional guidelines for driving off-highway.

Preparing to Drive

You should do the following checks and adjustments every day before you drive your vehicle.

1. Make sure all windows, mirrors, and outside lights are clean and unobstructed. Remove frost, snow, or ice.

2. Check that the hood, tailgate and hatch glass are fully closed.

3. Visually check the tires. If a tire looks low, use a gauge to check its pressure.

4. Check that any items you may be carrying with you inside are stored properly or fastened down securely.

5. Check the adjustment of the seat (see page 97).

6. Check the adjustment of the inside and outside mirrors (see page 114).

7. Check the adjustment of the steering wheel (see page 83).

8. Make sure the doors are securely closed and locked.

9. Fasten your seat belt. Check that your passengers have fastened their seat belts (see page 17).

10. Turn the ignition switch ON (II). Check the indicator lights in the instrument panel.

11. Start the engine (see page 200).

12. Check the gauges and indicator lights in the instrument panel (see page 65).

Starting the Engine

1. Apply the parking brake.

2. In cold weather, turn off all electrical accessories to reduce the drain on the battery.

3. *Manual Transmission:*
   Push the clutch pedal down all the way. START (III) does not function unless the clutch pedal is depressed.

   Automatic Transmission:
   Make sure the shift lever is in Park. Press on the brake pedal.

4. Without touching the accelerator pedal, turn the ignition key to the START (III) position. If the engine does not start right away, do not hold the key in START (III) for more than 15 seconds at a time. Pause for at least 10 seconds before trying again.

5. If the engine does not start within 15 seconds, or starts but stalls right away, repeat step 4 with the accelerator pedal pressed half-way down. If the engine starts, release pressure on the accelerator pedal so the engine does not race.

6. If the engine still does not start, press the accelerator pedal all the way down and hold it there while starting in order to clear flooding. As before, keep the ignition key in the START (III) position for no more than 15 seconds. Return to step 5 if the engine does not start. If it starts, lift your foot off the accelerator pedal so the engine does not race.

Starting in Cold Weather at High Altitude (Above 8,000 feet/ 2,400 meters)

An engine is harder to start in cold weather. The thinner air found at high altitude above 8,000 feet (2,400 meters) adds to the problem. Use the following procedure:

1. Turn off all electrical accessories to reduce the drain on the battery.

2. Push the accelerator pedal half-way to the floor and hold it there while starting the engine. Do not hold the ignition key in START (III) for more than 15 seconds. When the engine starts, release the accelerator pedal gradually as the engine speeds up and smooths out.

3. If the engine fails to start in step 2, push the accelerator pedal to the floor and hold it there while you try to start the engine for no more than 15 seconds. If the engine does not start, return to step 2.

5-speed Manual Transmission

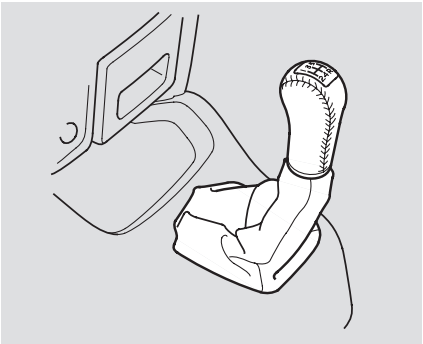

The manual transmission is synchronized in all forward gears for smooth operation. It has a lockout so you cannot shift directly from Fifth to Reverse. When shifting up or down, make sure you push the clutch pedal down all the way, shift to the next gear, and let the pedal up gradually. When you are not shifting, do not rest your foot on the clutch pedal. This can cause your clutch to wear out faster.

Come to a full stop before you shift into Reverse. You can damage the transmission by trying to shift into Reverse with the vehicle moving. Push down the clutch pedal, and pause for a few seconds before shifting into Reverse, or shift into one of the forward gears for a moment. This stops the gears so they won't "grind."

When slowing down, you can get extra braking from the engine by shifting to a lower gear. This extra braking can help you maintain a safe speed and prevent your brakes from overheating while going down a steep hill. Before downshifting, make sure engine speed will not go into the tachometer's red zone in the lower gear.

⚠ WARNING

Rapid slowing or speeding-up can cause loss of control on slippery surfaces. If you crash, you can be injured.

Use extra care when driving on slippery surfaces.

5-speed Manual Transmission

Recommended Shift Points

Drive in the highest gear that lets the engine run and accelerate smoothly. This will give you the best fuel economy and effective emissions control. The following shift points are recommended:

Shift up	Normal acceleration
1st to 2nd	15 mph (24 km/h)
2nd to 3rd	25 mph (40 km/h)
3rd to 4th	40 mph (64 km/h)
4th to 5th	48 mph (77 km/h)

Engine Speed Limiter

If you exceed the maximum speed for the gear you are in, the engine speed will enter into the tachometer's red zone. If this occurs, you may feel the engine cut in and out. This is caused by a limiter in the engine's computer controls. The engine will run normally when you reduce the RPM below the red zone.

Before downshifting, make sure the engine will not go into the tachometer's red zone.

Automatic Transmission

Your Honda's transmission has four forward speeds, and is electronically controlled for smoother shifting. It also has a "lock-up" torque converter for better fuel economy. You may feel what seems like another shift when the converter locks.

Shift Lever Position Indicator

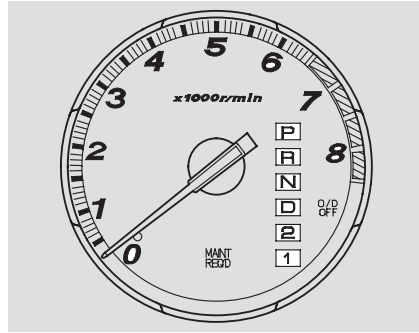

This indicator on the instrument panel shows which position the shift lever is in.

The "D" indicator comes on for a few seconds when you turn the ignition switch ON (II). If it flashes while driving (in any shift position), it indicates a possible problem in the transmission. Avoid rapid acceleration and have the transmission checked by an authorized Honda dealer as soon as possible.

The malfunction indicator lamp may come on along with the "D" indicator if there is a problem in the automatic transmission control system.

Shift Lever Positions

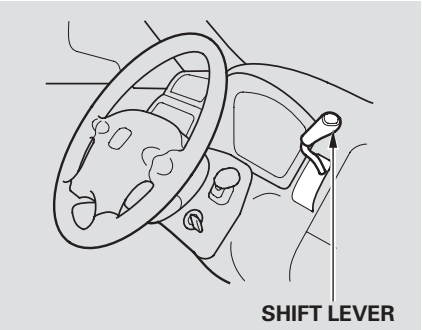

The shift lever has six positions. It must be in Park or Neutral to start the engine. When you are stopped in D, 2, 1, N or R, press firmly on the brake pedal, and keep your foot off the accelerator pedal.

To shift from:	Do this:
P to R	Press the brake pedal, then move the shift lever.
R to N N to D D to 2 2 to 1 1 to 2 2 to D D to N N to R R to P	Move the lever.

You cannot shift out of Park with the brake pedal depressed when the ignition switch is in LOCK (0) or ACCESSORY (I).

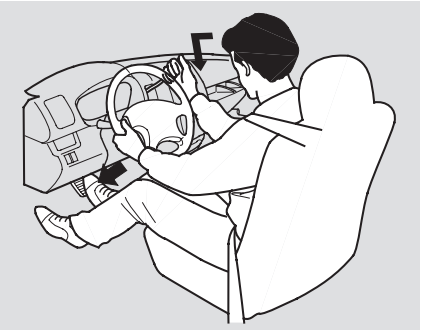

Park (P) — This position mechanically locks the transmission. Use Park whenever you are turning off or starting the engine. To shift out of Park, you must press on the brake pedal and have your foot off the accelerator pedal. Move the shift lever to the left and down to shift out of the Park positon.

CONTINUED

Automatic Transmission

If you have done all of the above and still cannot move the lever out of Park, see Shift Lock Release on page 209 .

To avoid transmission damage, come to a complete stop before shifting into Park. The shift lever must be in Park before you can remove the key from the ignition switch.

Reverse (R) — To shift to Reverse from Park, see the explanation under Park. To shift to Reverse from Neutral, come to a complete stop and then shift.

Your vehicle has a reverse lockout so you cannot accidentally shift to Reverse when the vehicle speed exceeds 5 mph (8 km/h).

If you cannot shift to Reverse when the vehicle is stopped, press the brake pedal and slowly shift to Neutral, and then to Reverse.

If there is a problem in the reverse lockout system, or your vehicle's battery is disconnected or goes dead, you cannot shift to Reverse. (Refer to Shift Lock Release on page 209).

Neutral (N) — Use Neutral if you need to restart a stalled engine, or if it is necessary to stop briefly with the engine idling. Shift to Park position if you need to leave the vehicle for any reason. Press on the brake pedal when you are moving the shift lever from Neutral to another gear.

Drive (D) — Use this position for your normal driving. The transmission automatically selects a suitable gear for your speed and acceleration. You may notice the transmission shifting up at higher speeds when the engine is cold. This helps the engine warm up faster.

For faster acceleration, you can get the transmission to automatically downshift by pushing the accelerator pedal to the floor. The transmission will shift down one or two gears, depending on your speed.

Over-drive (O/D) Mode

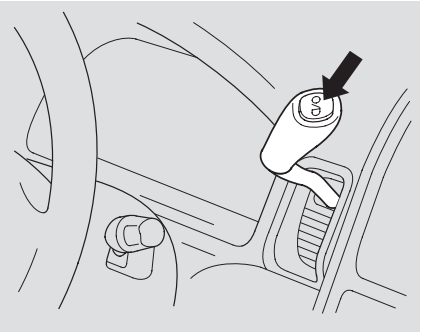

The Over-drive (O/D) is on whenever you turn the ignition ON (II). You can turn it off by pressing the O/D switch on the edge of the shift lever. The O/D OFF indicator on the instrument panel next to the shift lever position indicator will come on.

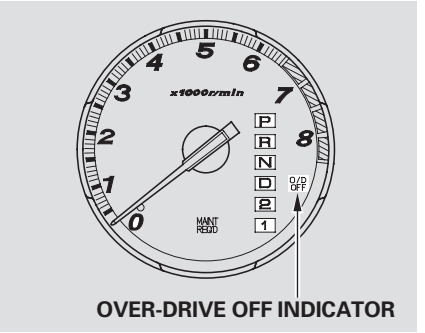

Pressing the O/D switch again turns the Over-drive mode back on. Over-drive can be turned on or off only when the ignition switch is ON (II) and the shift lever is in the D position. Over-drive mode turns on every time you start the engine, even if you turned it off the last time you drove the vehicle.

CONTINUED

Automatic Transmission

When the Over-drive is off, the transmission selects only the first three gears. Turn the O/D off to provide engine braking when going down a steep hill. You can also avoid the transmission from cycling between third and fourth gears in stop-and-go driving.

The O/D OFF indicator also comes on for a few seconds when you turn the ignition switch to ON(II).

Second (2) — This position locks the transmission in second gear. It does not downshift to first gear when you come to a stop. Second gives you more power when climbing, and increased engine braking when going down steep hills. Use second gear when starting out on a slippery surface or in deep snow. It will help reduce wheelspin.

First (1) — With the lever in this position, the transmission locks in First gear. By upshifting and downshifting through 1, 2, and D, you can operate this transmission much like a manual transmission without a clutch pedal.

If you shift into First position when the vehicle speed is above 31 mph (50 km/h), the transmission shifts into Second gear first to avoid sudden engine braking.

Engine Speed Limiter
If you exceed the maximum speed for the gear you are in, the engine speed will enter into the tachometer's red zone. If this occurs, you may feel the engine cut in and out. This is caused by a limiter in the engine's computer controls. The engine will run normally when you reduce the RPM below the red zone.

Automatic Transmission

Shift Lock Release
This allows you to move the shift lever out of Park if the normal method of pushing on the brake pedal does not work. This procedure is also used to release the Reverse Lockout.

1. Set the Parking brake.

2. Make sure the ignition switch is in the LOCK (0) position.

   To release the Reverse Lockout, make sure the ignition switch is in the ACCESSORY (I) position.

3. Put a cloth on the edge of the Shift Lock Release slot cover next to the shift lever. Use a small flat-tipped screwdriver or small metal plate (neither are included in the tool kit) to remove the cover. Carefully pry on the edge of the cover.

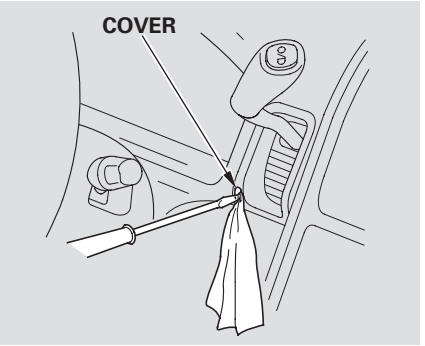

4. Insert a screwdriver in the Shift Lock Release slot.

5. Push down on the screwdriver and move the shift lever out of Park to Neutral.

   To release the Reverse Lockout, move the shift lever from Neutral to Reverse, then to Park.

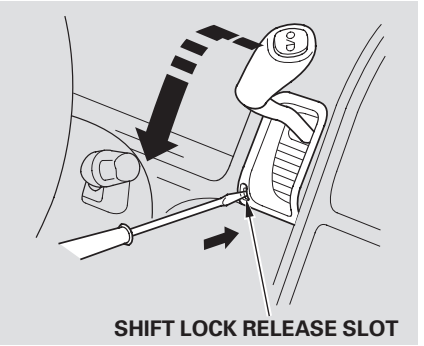

6. Remove the Screwdriver from the Shift Lock Release slot, then install a new cover. Make sure the notch on the cover is on the right side. Depress the brake pedal and restart the engine.

If you need to use the Shift Lock Release, it means your vehicle is developing a problem. Have the vehicle checked by your Honda dealer.

Parking

Always use the parking brake when you park your vehicle. The indicator on the instrument panel shows that the parking brake is not fully released; it does not indicate that the parking brake is firmly set. Make sure the parking brake is set firmly or your vehicle may roll if it is parked on an incline.

If your vehicle has an automatic transmission, set the parking brake before you put the transmission in Park. This keeps the vehicle from moving and putting pressure on the parking mechanism in the transmission — making it easier to move the shift lever out of Park when you want to drive away.

If the vehicle is facing uphill, turn the front wheels away from the curb. If you have a manual transmission, put it in first gear.

If the vehicle is facing downhill, turn the front wheels toward the curb. If you have a manual transmission, put it in reverse gear.

Make sure the parking brake is fully released before driving away. Driving with the parking brake partially set can overheat or damage the rear brakes.

Parking Tips

- Make sure the moonroof and the windows are closed.
- Turn off the lights.
- Place any packages, valuables, etc., in the cargo area or take them with you.
- Lock the doors and the tailgate with the key or the remote transmitter.
  Make sure the hatch glass is closed securely.
- Never park over dry leaves, tall grass, or other flammable materials. The three way catalytic converter gets very hot, and could cause these materials to catch on fire.

The Braking System

Your Honda is equipped with disc brakes at all four wheels. A power assist helps reduce the effort needed on the brake pedal. The ABS (on vehicles equipped with ABS) helps you retain steering control when braking very hard.

Put your foot on the brake pedal only when you intend to brake. Resting your foot on the pedal keeps the brakes applied lightly, causing them to build up heat. Heat build-up can reduce how well your brakes work. It also keeps your brake lights on all the time, confusing drivers behind you.

Constant application of the brakes when going down a long hill builds up heat and reduces their effectiveness. Use the engine to assist the brakes by downshifting to a lower gear and taking your foot off the accelerator pedal.

Check your brakes after driving through deep water. Apply the brakes moderately to see if they feel normal. If not, apply them gently and frequently until they do. Since a longer distance is needed to stop with wet brakes, be extra cautious and alert in your driving.

Brake Wear Indicators
All four brakes have audible brake wear indicators.

When the brake pads need replacing, you will hear a distinctive metallic “screeching” sound when you apply the brakes. If you do not have the brake pads replaced, they will begin screeching all the time.

Your brakes may sometimes squeal or squeak when you apply them lightly. Do not confuse this with the brake wear indicators. They make a very audible “screeching.”

The Braking System

Brake System Design

The hydraulic system that operates the brakes has two separate circuits. Each circuit works diagonally across the vehicle (the left-front brake is connected with the right-rear brake, etc.). If one circuit should develop a problem, you will still have braking at two wheels.

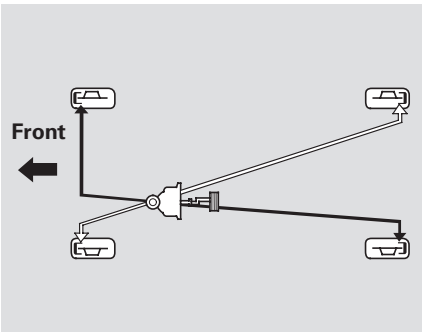

Anti-lock Brakes

Standard for EX model in the U.S., and EX and EX-L models in Canada

ABS helps to prevent the wheels from locking up and skidding during hard braking, allowing you to retain steering control.

When the front tires skid, you lose steering control; the vehicle continues straight ahead even though you turn the steering wheel. The ABS helps to prevent lock-up and helps you retain steering control by pumping the brakes rapidly; much faster than a person can do it.

The ABS also balances the front-to rear braking distribution according to vehicle loading.

You should never pump the brake pedal; this defeats the purpose of the ABS. Let the ABS work for you by always keeping firm, steady pressure on the brake pedal as you steer away from the hazard. This is sometimes referred to as *"stomp and steer."*

You will feel a pulsation in the brake pedal when the ABS activates, and you may hear some noise. This is normal; it is the ABS rapidly pumping the brakes.

Activation varies with the amount of traction your tires have. On dry pavement, you will need to press on the brake pedal very hard before you activate the ABS. However, you may feel the ABS activate immediately if you are trying to stop on snow or ice.

Important Safety Reminders

ABS does not reduce the time or distance it takes to stop the vehicle, it only helps with steering control during braking. You should always maintain a safe following distance from other vehicles.

ABS will not prevent a skid that results from changing direction abruptly, such as trying to take a corner too fast or making a sudden lane change. Always drive at a safe, prudent speed for the road and weather conditions.

ABS cannot prevent a loss of stability. Always steer moderately when you are braking hard. Severe or sharp steering wheel movement can still cause your vehicle to veer into oncoming traffic or off the road.

A vehicle with ABS may require a longer distance to stop on loose or uneven surfaces, such as gravel or snow, than a vehicle without anti-lock. Slow down and allow a greater distance between vehicles under those conditions.

CONTINUED

The Braking System

ABS Indicator

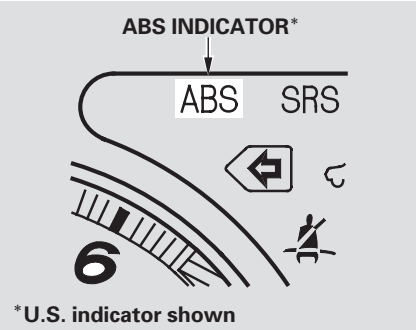

*U.S. indicator shown

The ABS is self-checking. If anything goes wrong, the ABS indicator on the instrument panel comes on (see page 68). This means the anti-lock function of the braking system has shut down. The brakes still work like a conventional system without anti-lock, providing normal stopping ability. You should have the dealer inspect your vehicle as soon as possible.

If the ABS indicator and the brake system indicator come on together, and the parking brake is fully released, the front-to-rear braking distribution system may also shut down.

Test your brakes as instructed on page 329 . If the brakes feel normal, drive slowly and have your vehicle repaired by your dealer as soon as possible. Avoid sudden hard braking which could cause the rear wheels to lock up and possibly lead to a loss of control.

Driving in Bad Weather

Rain, fog, and snow conditions require a different driving technique because of reduced traction and visibility. Keep your vehicle well-maintained and exercise greater caution when you need to drive in bad weather. The cruise control should not be used in these conditions.

Driving Technique — Always drive slower than you would in dry weather. It takes your vehicle longer to react, even in conditions that may seem just barely damp. Apply smooth, even pressure to all the controls. Abrupt steering wheel movements or sudden, hard application of the brakes can cause loss of control in wet weather. Be extra cautious for the first few miles (kilometers) of driving while you adjust to the change in driving conditions. This is especially true in snow. A person can forget some snow-driving techniques during the summer months. Practice is needed to relearn those skills.

Exercise extra caution when driving in rain after a long dry spell. After months of dry weather, the first rains bring oil to the surface of the roadway, making it slippery.

Visibility — Being able to see clearly in all directions and being visible to other drivers are important in all weather conditions. This is more difficult in bad weather. To be seen more clearly during daylight hours, turn on your headlights.

Inspect your windshield wipers and washers frequently. Keep the windshield washer reservoir full of the proper fluid. Have the windshield wiper blades replaced if they start to streak the windshield or leave parts unwiped. Use the defrosters and air conditioning to keep the windows from fogging up on the inside (see page 134).

CONTINUED

Driving in Bad Weather

Traction — Check your tires frequently for wear and proper pressure. Both are important in preventing "hydroplaning" (loss of traction on a wet surface). In the winter, mount snow tires on all four wheels for the best handling.

Watch road conditions carefully, they can change from moment to moment. Wet leaves can be as slippery as ice. "Clear" roads can have patches of ice. Driving conditions can be very hazardous when the outside temperature is near freezing. The road surface can become covered with areas of water puddles mixed with areas of ice, so your traction can change without warning.

Be careful when downshifting. If traction is low, you can lock up the drive wheels for a moment and cause a skid.

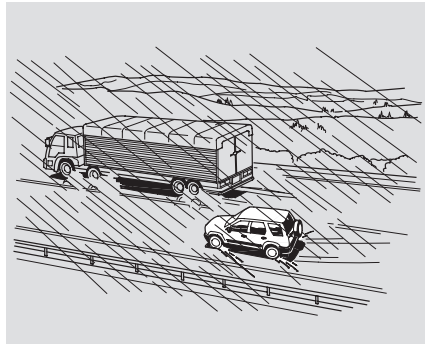

Be very cautious when passing, or being passed by other vehicles. The spray from large vehicles reduces your visibility, and the wind buffeting can cause you to lose control.

Towing a Trailer

Your Honda has been designed primarily to carry passengers and their cargo. You can use it to tow a trailer if you carefully observe the load limits, use the proper equipment, and follow the guidelines in this section.

Load Limits

- **Total Trailer Weight:** The total weight of the trailer and everything loaded in it must not exceed 1,500 lbs (680 kg). Towing a load that is too heavy can seriously affect your vehicle's handling and performance. It can also damage the engine and drivetrain.

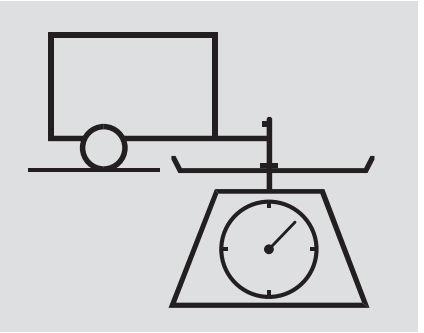

- **Tongue Load:** The weight that the tongue of a fully-loaded trailer puts on the hitch should be approximately 10 percent of the trailer weight. Too little tongue load can make the trailer unstable and cause it to sway. Too much tongue load reduces front-tire traction and steering control.

CONTINUED

Towing a Trailer

To achieve a proper tongue load, start by loading 60 percent of the load toward the front of the trailer and 40 percent toward the rear, then re-adjust the load as needed.

- **Gross Vehicle Weight Rating (GVWR):**
  The total weight of the vehicle, all occupants, all cargo, *and* the tongue load must not exceed:
  4,320 lbs (1,960 kg)

- **Gross Axle Weight Rating (GAWR):**
  The total weight of the vehicle, all occupants, all cargo, and the tongue load must not exceed:

  2,160 lbs (980 kg)
  on the front axle

  2,250 lbs (1,020 kg)
  on the rear axle

⚠ WARNING

Exceeding load limits or improperly loading your vehicle and trailer can cause a crash in which you can be seriously injured or killed.

Check the loading of your vehicle and trailer carefully before starting to drive.

Towing a Trailer

Checking Loads

The best way to confirm that vehicle and trailer weights are within limits is to have them checked at a public scale.

Using a suitable scale or a special tongue load gauge, check the tongue load the first time you set up a towing combination (a fully-loaded vehicle and trailer), then recheck the tongue load whenever the conditions change.

Towing Equipment and Accessories

Towing can require a variety of equipment, depending on the size of your trailer, how it will be used, and how much load you are towing.

Discuss your needs with your trailer sales or rental agency, and follow the guidelines in the rest of this section. Also make sure that all equipment is properly installed and that it meets federal, state, province, and local regulations.

Hitches

Any hitch used on your vehicle must be properly bolted to the underbody.

Safety Chains

Always use safety chains. Make sure they are secured to both the trailer and hitch, and that they cross under the tongue so they can catch the trailer if it becomes unhitched. Leave enough slack to allow the trailer to turn corners easily, but do not let the chains drag on the ground.

CONTINUED

Towing a Trailer

Trailer Brakes

Honda recommends that any trailer having a total weight of 1,000 lbs (450 kg) or more be equipped with its own electric or surge-type brakes.

If you choose electric brakes, be sure they are electronically actuated. Do not attempt to tap into your vehicle's hydraulic system. No matter how successful it may seem, any attempt to attach trailer brakes to your vehicle's hydraulic system will lower braking effectiveness and create a potential hazard.

Trailer Lights

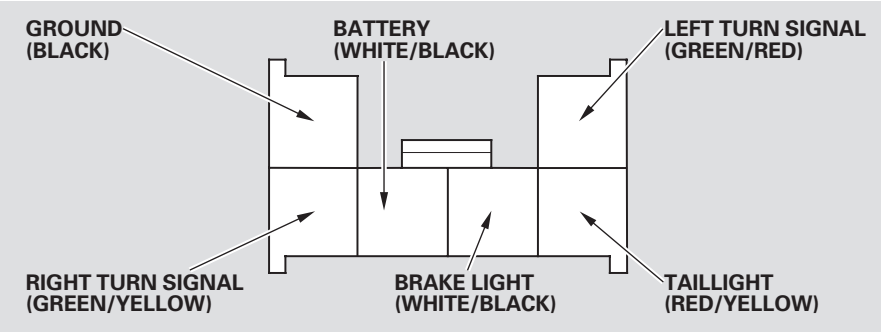

All states and Canadian provinces require some type of trailer lights. Check requirements for the areas where you plan to tow.

Your vehicle has a trailer lighting connector located behind the left side panel in the cargo area. Refer to the drawing above for the wiring color code and purpose of each pin.

If you use a converter, you can get the connector and pins that mate with the connector in your vehicle from your Honda dealer.

Since lighting and wiring vary in trailer type and brand, you should also have a qualified mechanic install a suitable connector between the vehicle and the trailer.

Towing a Trailer

Additional Trailer Equipment
Many states and Canadian provinces require special outside mirrors when towing a trailer. Even if they don't, you should install special mirrors if you cannot clearly see behind you, or if the trailer creates a blind spot.

Ask your trailer sales or rental agency if any other items are recommended or required for your towing situation.

Pre-Tow Checklist
When preparing to tow, and before driving away, be sure to check the following:

- The vehicle has been properly serviced, and the tires, brakes, suspension, and cooling system are in good operating condition.

  If you tow frequently, follow the Severe Conditions maintenance schedule.

- The trailer has been properly serviced and is in good condition.

- All weights and loads are within limits (see pages 217 and 218).

- The hitch, safety chains, and any other attachments are secure.

- All items on and in the trailer are properly secured and cannot shift while you drive.

- The lights and brakes on your vehicle and the trailer are working properly.

- Your vehicle tires and spare are properly inflated (see page 278), and the trailer tires and spare are inflated as recommended by the trailer maker.

Towing a Trailer

Driving Safely With a Trailer

The added weight, length, and height of a trailer will affect your vehicle's handling and performance, so driving with a trailer requires some special driving skills and techniques.

For your safety and the safety of others, take time to practice driving maneuvers before heading for the open road, and follow the guidelines discussed below.

Towing Speeds and Gears

Drive slower than normal in all driving situations, and obey posted speed limits for vehicles with trailers. If you have an automatic transmission, use the Over drive (O/D) mode when towing a trailer on level roads. Turn off the Over drive (O/D) mode when towing a trailer in hilly terrain (see page 207). (See "***Driving on Hills***" in the next column for additional gear information.)

Making Turns and Braking

Make turns more slowly and wider than normal. The trailer tracks a smaller arc than your vehicle, and it can hit or run over something the vehicle misses. Allow more time and distance for braking. Do not brake or turn suddenly as this could cause the trailer to jackknife or turn over.

Driving on Hills

When climbing hills, closely watch your temperature gauge. If it nears the red mark, turn the air conditioning off, reduce speed and, if necessary, pull to the side of the road to let the engine cool.

If the automatic transmission shifts frequently between 3rd and 4th gears while going up a hill, turn off the Over drive (O/D) mode (see page 207).

If you must stop when facing uphill, use the foot brake or parking brake. Do not try to hold the vehicle in place by pressing on the accelerator, as this can cause the automatic transmission to overheat.

Towing a Trailer

When driving down hills, reduce your speed and shift down to 3rd gear on the manual transmission, and turn off the Over drive (O/D) mode on the automatic transmission. Do not “ride” the brakes, and remember it will take longer to slow down and stop when towing a trailer.

Handling Crosswinds and Buffeting
Crosswinds and air turbulence caused by passing trucks can disrupt your steering and cause trailer swaying. When being passed by a large vehicle, keep a constant speed and steer straight ahead. Do not try to make quick steering or braking corrections.

Backing Up
Always drive slowly and have someone guide you when backing up. Grip the *bottom* of the steering wheel; then turn the wheel to the left to get the trailer to move to the left, and turn the wheel right to move the trailer to the right.

Parking
Follow all normal precautions when parking, including firmly setting the parking brake and putting the transmission in Park (automatic) or in 1st or Reverse (manual). Also, place wheel chocks at each of the trailer’s tires.

Towing Your Vehicle Behind a Motorhome

Your CR-V can be towed behind a motorhome at legal highway speeds up to 65 mph(100 km/h). Do not exceed 65 mph(100km/h). Otherwise, severe transmission damage will occur. To avoid damage to the 4WD system, it must be towed with all four wheels on the ground (flat towing).

When purchasing a tow bar, make sure you select a reputable manufacturer and installer. Follow the manufacturer's attachment instructions carefully.

After attaching the tow bar to your motorhome, do the following to prepare your CR-V for "flat towing":

5-speed Manual Transmission

- When preparing to tow your CR-V, make sure the transmission is filled to the correct level (see page 261). Do not overfill.
- Release the parking brake.
- Shift the transmission to Neutral.
- Leave the key in the ignition switch and the ignition switch in ACCESSORY (I) so the steering wheel does not lock. Make sure the radio and any items plugged into the accessory power sockets are turned off so you do not run down the battery.

Automatic Transmission

When preparing to tow your CR-V, make sure the transmission is full of fluid (see page 260). Maintaining the correct level is very important. Do not overfill. Do the following *every day immediately before you begin towing*. Follow the procedure exactly. Otherwise, severe automatic transmission damage will occur.

Towing Your Vehicle Behind a Motorhome

- Start the engine.
- Press on the brake pedal. Shift the lever through all the positions (P, R, N, D, 2, 1)
- Shift to D, then to N. Let the engine run for three minutes, then turn off the engine.
- Release the parking brake.
- Leave the ignition switch in ACCESSORY (I) so the steering wheel does not lock. Make sure the radio and any items plugged into the accessory power sockets are turned off so you do not run down the battery.

Extended Towing

If you tow more than 8 hours in one day, you should repeat the above procedure at least every 8 hours. (when you stop for fuel, etc.)

NOTICE

The steering system can be damaged if the steering wheel is locked. Leave the ignition switch in Accessory (I), and make sure the steering wheel turns freely before you begin towing.

NOTICE

Failure to follow the above instructions exactly will result in severe automatic transmission damage. If you cannot shift the transmission or start the engine, your vehicle must be transported on a flat-bed truck or trailer.

NOTICE

Severe automatic transmission damage will occur if the vehicle is shifted from reverse to neutral and then towed with the drive wheels on the ground.

If you tow a CR-V with an automatic transmission, the transmission fluid must be changed every two years or 30,000 miles (48,000 km), whichever comes first.

Off-Highway Guidelines

General Information

Your CR-V has been designed primarily for use on pavement. But its higher ground clearance allows you to occasionally travel on unpaved roads, to campgrounds, picnic sites, and similar locations. It is not designed for trail-blazing, mountain climbing, or other challenging off-road activities.

If you decide to drive on unpaved roads, you will find that it requires somewhat different driving skills. Your CR-V will also handle somewhat differently than it does on pavement. So be sure to read this owner's manual, pay special attention to the precautions and tips in this section, and get acquainted with your vehicle before you leave the pavement.

Off-Highway Guidelines

Important Safety Precautions
Remember that your CR-V has higher ground clearance and a higher center of gravity than passenger vehicles designed for use only on pavement. This means your vehicle can more easily tip or roll over if you make abrupt turns or drive on slopes.

Utility vehicles have a significantly higher rollover rate than other types of vehicles. To avoid loss of control or rollover, be sure to follow all recommendations and precautions on page 198 and in this section.

Seat belts are just as important off-road as on paved roads. Wherever you drive, make sure you and your passengers always wear seat belts. If children or infants are along for the ride, see that they are properly secured. In a rollover crash, an unbelted person is more likely to die than a person wearing a seat belt.

⚠ WARNING

Improperly operating this vehicle on or off-pavement can cause an accident or rollover in which you and your passengers could be seriously injured or killed.

- Follow all instructions and guidelines in the owner's manual.
- Keep your speed low and don't drive faster than conditions permit.

On many unpaved roads, you won't find lane markers, traffic signals, or signs to warn you of possible trouble ahead. It's up to you to continually assess the situation and drive within limits.

The route presents limits (some roads are too steep and bumpy for example). You have limits (in driving skills and comfort). And your vehicle also has limits (traction, stability, and power, for instance).

Driving off-highway can be hazardous if you fail to recognize limits and take proper precautions. For example, you can have an accident or rollover during maneuvers such as turning, driving on hills, or over large obstacles.

Be sure to store cargo properly, and do not exceed your CR-V's cargo or trailer load limits (see pages 194 and 217).

Off-Highway Guidelines

Driving Tips

The following pages contain practical tips on basic off-highway operation.

Check Out Your Vehicle

Driving off-highway can be hard on a vehicle. Before you leave the pavement, be sure all scheduled maintenance and service has been done, and that you have inspected your vehicle. Pay special attention to the condition of the tires, and use a gauge to check the tire pressures.

After you return to the pavement, carefully inspect your vehicle to make sure there is no damage that could make driving it unsafe. Check the tires for damage and for proper pressure.

Controlling Speed

Off-highway, the general rule is to keep your speed low. Of course, you'll need enough speed to keep moving forward. But at higher speeds, you have less time to assess conditions and make good decisions. There's also a greater chance of sliding if you brake or turn too quickly on wet soil, gravel, or ice. In any situation, never go faster than conditions allow.

Accelerating and Braking

For better traction on all surfaces, accelerate slowly and gradually build up speed. If you try to start too fast on wet soil, mud, snow, or ice, you might not have enough traction to get underway. You may even dig yourself into a hole. Starting with the shift lever in second gear (2) will help get you to a smooth start on snow and ice.

Generally, the best off-pavement braking technique is to gently depress the brake pedal, then increase pressure as more braking is needed. Avoid hard braking. Keep in mind that you will usually need more time and distance to brake to a stop on unpaved surfaces.

With ABS

If you need to brake hard because of an emergency, apply steady, even pressure to the brake pedal. Do not pump the brakes; let the anti-lock braking system pump them for you. If you pump the brakes, the anti-lock cannot work as efficiently, and your stopping distance may be increased.

Off-Highway Guidelines

Test your brakes from time to time to make sure they are operating properly. This will also give you a feel for how much traction you have on a given surface.

Turning
Off-highway, the basic turning technique is to drive at low speed and gradually adjust the amount of steering to suit the surface.

You should have no problem making sharp turns at low speed on level ground. But never make an abrupt turn at higher speeds, on or off pavement. With a higher center of gravity, your vehicle can more easily tip or roll over.

Driving on Slopes
Before driving up or down a hill, stop and assess the situation. If you can't clearly see all road conditions (good traction, no bumps, holes or other obstacles, a safe way out, etc.) walk the slope before you drive on it. If you have any doubt about whether you can safely drive on the slope, *don't do it*. Find another route.

If you are driving up a hill and find that you cannot continue (because of the steepness, a large obstacle, etc.), *do not try to turn around*. Your vehicle could roll over. Slowly back down the hill, following the same route you took up the hill.

Avoiding Obstacles
Bumps, holes, rocks, and other obstacles can be hazardous. Debris in the road can damage your suspension or other components. Even small rocks can cut your tires.

More important, because your vehicle has a high center of gravity, driving over a large obstacle, or allowing a wheel to drop into a deep hole, can cause your vehicle to tip or roll over.

Drive slow enough to observe obstacles ahead and maneuver around them. If you can't avoid a serious obstacle, turn around and look for a better route.

Off-Highway Guidelines

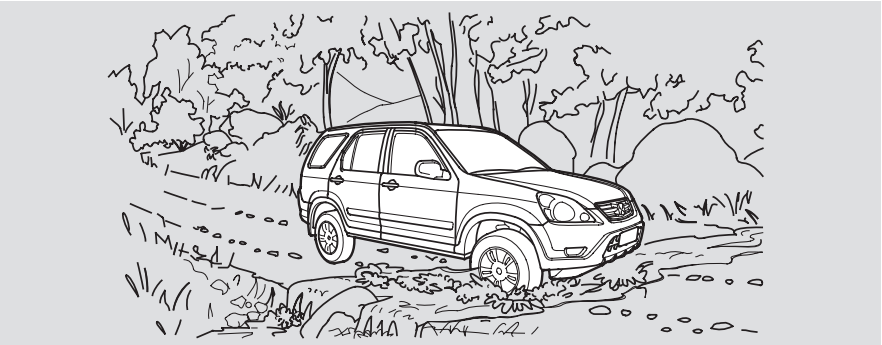

If You Encounter Water

Avoid driving through deep water. If you encounter water in your route (a small stream or large puddle, for example), evaluate it carefully before going ahead. Make sure it is shallow, flowing slowly, and has firm ground underneath. If you are not sure of the depth or the ground, turn around and find another route.

Driving through deep water can also damage your vehicle. The water can get into the transmission and differential, diluting the lubricant and causing an eventual failure. It can also wash the grease out of the wheel bearings.

If You Get Stuck

Avoid driving on soft sand, deep mud, or other surfaces where you could get stuck. If you do happen to get stuck because of inclement weather or other conditions, choose a safe and appropriate course of action.

You should never use a jack to try getting unstuck. A jack only works on firm, level ground. Also, your vehicle could easily slip off the jack and hurt you or someone else.

4-Wheel Drive Vehicles

If you spin the wheels excessively trying to get unstuck, you may overheat the components of the 4-wheel drive system. If this happens, the 4-wheel drive system shuts off and only the front wheels receive power. If this happens, stop and allow everything to cool down. The 4-wheel drive system will work again after its temperature drops.

If you slip the clutch for a long time while trying to get unstuck, you may overheat and damage it.

Maintenance

This section explains why it is important to keep your vehicle well maintained and to follow basic maintenance safety precautions.

This section also includes Maintenance Schedules for normal driving and severe driving conditions, a Maintenance Record, and instructions for simple maintenance tasks you may want to take care of yourself.

If you have the skills and tools to perform more complex maintenance tasks on your Honda, you may want to purchase the Service Manual. See page 357 for information on how to obtain a copy, or see your Honda dealer.

Maintenance Safety 234
Important Safety Precautions .. 235
Maintenance Schedule 236
Required Maintenance Record 243
Owner Maintenance Checks 245
Fluid Locations 246
Engine Oil 247
Adding Oil 247
Recommended Oil 247
Synthetic Oil 248
Additives 248
Changing the Oil and Filter 249
Cooling System 251
Adding Engine Coolant 251
Replacing Engine Coolant 253
Windshield Washers 258
Transmission Fluid 260
Automatic Transmission 260
5-speed Manual Transmission 261
Rear Differential Fluid 262
Brake and Clutch Fluid 263
Brake System 263
Clutch System 264
Power Steering 264
Air Cleaner Element 265
Hood Latch 266
Spark Plugs 267
Replacement 267
Specifications 268
Battery 269
Wiper Blades 271
Air Conditioning System 274
Dust and Pollen Filter 275
Drive Belt 277
Tires 278
Inflation 278
Recommended Tire Pressures for Normal Driving 279
Tire Pressure Adjustment for High Speed Driving 279
Inspection 280
Maintenance 280
Tire Rotation 281
Replacing Tires and Wheels 282
Wheels and Tires 283
Winter Driving 283
Snow Tires 283
Tire Chains 284
Lights 285
Headlight Aiming 287
Replacing Bulbs 287
Storing Your Vehicle 295

Maintenance Safety

Regularly maintaining your vehicle is the best way to protect your investment. Proper maintenance is essential to your safety and the safety of your passengers. It will also reward you with more economical, trouble-free driving, and help reduce air pollution.

⚠ WARNING

Improperly maintaining this vehicle or failing to correct a problem before driving can cause a crash in which you can be seriously hurt or killed.

Always follow the inspection and maintenance recommendations and schedules in this owner's manual.

This section includes instructions for simple maintenance tasks, such as checking and adding oil. Any service items not detailed in this section should be performed by a Honda technician or other qualified mechanic.

Some of the most important safety precautions are given here. However, we cannot warn you of every conceivable hazard that can arise in performing maintenance. Only you can decide whether or not you should perform a given task.

⚠ WARNING

Failure to properly follow maintenance instructions and precautions can cause you to be seriously hurt or killed.

Always follow the procedures and precautions in this owner's manual.

Maintenance Safety

Important Safety Precautions
Before you begin any maintenance, make sure your vehicle is parked on level ground and that the parking brake is set. Also, be sure the engine is off. This will help to eliminate several potential hazards:

- **Carbon monoxide poisoning from engine exhaust.** Be sure there is adequate ventilation whenever you operate the engine.
- **Burns from hot parts.** Let the engine and exhaust system cool before touching any parts.
- **Injury from moving parts.** Do not run the engine unless instructed to do so.

Read the instructions before you begin, and make sure you have the tools and skills required.

To reduce the possibility of fire or explosion, be careful when working around gasoline or batteries. Use a commercially available degreaser or parts cleaner, not gasoline, to clean parts. Keep cigarettes, sparks, and flames away from the battery and all fuel-related parts.

You should wear eye protection and protective clothing when working near the battery or when using compressed air.

Maintenance Schedule

The Maintenance Schedule specifies how often you should have your vehicle serviced and what things need attention. It is essential that you have your vehicle serviced as scheduled to retain its high level of safety, dependability, and emissions control performance.

The services and time or distance intervals shown in the maintenance schedule assume you will use your vehicle as normal transportation for passengers and their possessions. You should also follow these recommendations:

- Avoid exceeding your vehicle's load limit. This puts excess stress on the engine, brakes, and many other parts of your vehicle. The load limit is shown on the label on the driver's doorjamb.
- Operate your vehicle on reasonable roads within the legal speed limit.
- Drive your vehicle regularly over a distance of several miles (kilometers).
- Always use unleaded gasoline with the proper octane rating (see page 184).

Which Schedule to Follow:
Service your vehicle according to the time and mileage periods on one of the Maintenance Schedules on the following pages.

U.S. Owners — Follow the Maintenance Schedule for Severe Conditions if you drive your vehicle MAINLY under one or more of the following conditions.

- Driving less than 5 miles (8 km) per trip or, in freezing temperatures, driving less than 10 miles (16 km) per trip.
- Driving in extremely hot [over 90°F (32°C)] conditions.
- Extensive idling or long periods of stop-and-go driving.
- Trailer towing, driving with a roof rack, or driving in mountainous conditions.

- Driving on muddy, dusty, or de-iced roads.

NOTE: If you only OCCASIONALLY or NEVER, drive under a "severe" condition, you should follow the Maintenance Schedule for Normal Conditions.

Canadian Owners — Follow the Maintenance Schedule for Severe Conditions.

Your authorized Honda dealer knows your vehicle best and can provide competent, efficient service. However, service at a dealer is not mandatory to keep your warranties in effect. Maintenance may be done by any qualified service facility or person who is skilled in this type of automotive service. Keep all the receipts as proof of completion, and have the person who does the work fill out the Maintenance Record. Check your warranty booklet for more information.

We recommend the use of genuine Honda parts and fluids whenever you have maintenance done. These are manufactured to the same high-quality standards as the original components, so you can be confident of their performance and durability.

U.S. Vehicles:
Maintenance, replacement or repair of emissions control devices and systems may be done by any automotive repair establishment or individual using parts that are "certified" to EPA standards.

According to state and federal regulations, failure to perform maintenance on the items marked with # will not void your emissions warranties. However, Honda recommends that all maintenance services be performed at the recommended time or mileage period to ensure long-term reliability.

Service at the indicated distance or time — whichever comes first.	miles x 1,000	10	20	30	40	50	60	70	80	90	100	110	120
	km x 1,000	16	32	48	64	80	96	112	128	144	160	176	192
	months	12		24		36		48		60		72	
Check engine oil and coolant		Check oil and coolant at each fuel stop											
Replace engine oil		●	●	●	●	●	●	●	●	●	●	●	●
Rotate tires (Check tire inflation and condition at least once per month)													
Replace engine oil filter													
Inspect front and rear brakes													
Check parking brake adjustment													
Visually inspect the following items:													
Tie rod ends, steering gear box and boots													
Suspension components			●		●		●		●		●		●
Driveshaft boots													
Brake hoses and lines (including ABS)													
All fluid levels and condition of fluids													
#Exhaust system													
#Fuel lines and connections													
Inspect and adjust drive belts				●			●			●			●
Replace dust and pollen filter													
Replace transmission fluid	M/T												●
	A/T												●*
Replace rear differential fluid (4WD)										●			
Service the following items at the recommended intervals.													
Replace air cleaner element		Every 30,000 miles (48,000 km)											
Replace spark plugs		Every 110,000 miles (176,000 km)											
Inspect valve clearance		Inspect every 110,000 miles (176,000 km), otherwise adjust only if noisy											
Inspect idle speed		Every 160,000 miles (256,000 km) or 8 years											
Replace engine coolant		At 120,000 miles (192,000 km) or 10 years, then every 60,000 miles (96,000 km) or 5 years											
Replace brake fluid		Every 3 years (independent of mileage)											

*: Replace at 120,000 miles (192,000 km) or 6 years, then every 90,000 miles (144,000 km) or 5 years.
#: See information on maintenance and emissions warranty, last column, page 237 .

Service at the indicated distance or time, whichever comes first. Do the items in **A, B, C, D** as required for each distance/time.
U.S. Owners — Refer to page 236 to determine which schedule to use.
Canadian Owners — Use the Maintenance Schedule for Severe Conditions.

10,000 mi/16,000 km/1 yr	Do items in A.
20,000 mi/32,000 km/1 yr	Do items in A, B.
30,000 mi/48,000 km	Do item in D.
30,000 mi/48,000 km/2 yrs	Do items in A, C.
40,000 mi/64,000 km/2 yrs	Do items in A, B.
3 yrs	☐Replace brake fluid (independent of mileage).
50,000 mi/80,000 km/3 yrs	Do items in A.
60,000 mi/96,000 km	Do item in D.
60,000 mi/96,000 km/3 yrs	Do items in A, B, C.
70,000 mi/112,000 km/4 yrs	Do items in A.
80,000 mi/128,000 km/4 yrs	Do items in A, B.
90,000 mi/144,000 km	Do item in D.
90,000 mi/144,000 km/5 yrs	Do items in A, C. ☐Replace rear differential fluid (4WD).
100,000 mi/160,000 km/5 yrs	Do items in A, B.
110,000 mi/176,000 km	☐Inspect valve clearance, cold engine. ☐Replace spark plugs.
6 yrs	☐Replace brake fluid (independent of mileage).
110,000 mi/176,000 km/6 yrs	Do items in A.
120,000 mi/192,000 km	Do item in D.
120,000 mi/192,000 km/6 yrs	☐Replace transmission fluid (M/T). ☐Replace transmission fluid (A/T), then replace every 90,000 mi/144,000 km/5 yrs. Do items in A, B, C.
120,000 mi/192,000 km/10 yrs	☐Replace engine coolant, then replace every 60,000 mi/96,000 km/5 yrs.
160,000 mi/256,000 km/8 yrs	☐Inspect idle speed.

A	☐Replace engine oil. ☐Rotate tires (follow pattern on page 281).
B	☐Replace engine oil filter. ☐Inspect front and rear brakes. ☐Check parking brake adjustment. ☐Inspect tie rod ends, steering gear box and boots. ☐Inspect suspension components. ☐Inspect driveshaft boots. ☐Inspect brake hoses and lines (including ABS). ☐Check all fluid levels, condition of fluids, and check for leaks. ☐#Inspect exhaust system. ☐#Inspect fuel lines and connections.
C	☐Inspect and adjust drive belts. ☐Replace dust and pollen filter.
D	☐Replace air cleaner element every 30,000 mi/48,000 km (independent of time).

: See information on maintenance and emissions warranty, last column, page 237 .

NOTE:
- Check engine oil and coolant at each fuel stop.
- Check and adjust valve clearance, cold engine, only if noisy.

Service at the indicated distance or time — whichever comes first.													
	miles x 1,000	10	20	30	40	50	60	70	80	90	100	110	120
	km x 1,000	16	32	48	64	80	96	112	128	144	160	176	192
	months	12		24		36		48		60		72	
Check engine oil and coolant		Check oil and coolant at each fuel stop											
Replace engine oil		Replace every 5,000 miles (8,000 km) or 6 months											
Rotate tires (Check tire inflation and condition at least once per month)													
Replace engine oil filter													
Inspect front and rear brakes													
Lubricate door hinges, locks, and latches		●	●	●	●	●	●	●	●	●	●	●	●
Visually inspect the following items: Tie rod ends, steering gear box and boots Suspension components Driveshaft boots													
Check parking brake adjustment													
Visually inspect the following items: Brake hoses and lines (including ABS) All fluid levels and condition of fluids #Exhaust system, #Fuel lines and connections Lights and controls, Vehicle underbody			●		●		●		●		●		●
Inspect and adjust drive belts				●			●			●			●
Replace dust and pollen filter*													
Replace transmission fluid	M/T						●						●
	A/T	At 60,000 miles (96,000 km) or 3 years, then every 30,000 miles (48,000 km) or 2 years											
Replace rear differential fluid (4WD)										●			
Service the following items at the recommended intervals.													
Replace air cleaner element		Every 15,000 miles (24,000 km) in dusty conditions, otherwise use normal schedule											
Replace spark plugs		Every 110,000 miles (176,000 km)											
Inspect valve clearance		Inspect every 110,000 miles (176,000 km), otherwise adjust only if noisy											
Inspect idle speed		Every 160,000 miles (256,000 km) or 8 years											
Replace engine coolant		At 120,000 miles (192,000 km) or 10 years, then every 60,000 miles (96,000 km) or 5 years											
Replace brake fluid		Every 3 years (independent of mileage)											

* : See dust and pollen filter on page 275 for replacement information under special driving conditions.
# : See information on maintenance and emissions warranty, last column, page 237 .

Service at the indicated distance or time, whichever comes first. Do the items in **A, B, C, D, E** as required for each distance/time.
U.S. Owners — Refer to page 236 to determine which schedule to use.
Canadian Owners — Use the Maintenance Schedule for Severe Conditions.

5,000 mi/8,000 km/½ yr	Do item in A.
10,000 mi/16,000 km/1 yr	Do items in A, B.
15,000 mi/24,000 km	Do item in E.
15,000 mi/24,000 km/1-½ yrs	Do item in A.
20,000 mi/32,000 km/1 yr	Do items in B, C.
20,000 mi/32,000 km/2 yrs	Do item in A.
25,000 mi/40,000 km/2-½ yrs	Do item in A.
30,000 mi/48,000 km	Do item in E.
30,000 mi/48,000 km/2 yrs	Do items in B, D.
30,000 mi/48,000 km/3 yrs	Do item in A.
35,000 mi/56,000 km/3-½ yrs	Do item in A.
40,000 mi/64,000 km/2 yrs	Do items in B, C.
40,000 mi/64,000 km/4 yrs	Do item in A.
45,000 mi/72,000 km	Do item in E.
45,000 mi/72,000 km/4-½ yrs	Do item in A.
3 yrs	☐Replace brake fluid (independent of mileage).
50,000 mi/80,000 km/3 yrs	Do item in B.
50,000 mi/80,000 km/5 yrs	Do item in A.
55,000 mi/88,000 km/5-½ yrs	Do item in A.
60,000 mi/96,000 km	Do item in E.
60,000 mi/96,000 km/3 yrs	☐Replace transmission fluid (M/T). ☐Replace transmission fluid (A/T). Do items in B, C, D.
60,000 mi/96,000 km/6 yrs	Do item in A.

A	☐Replace engine oil.
B	☐Replace engine oil filter. ☐Inspect front and rear brakes. ☐Rotate tires (follow pattern on page 281). ☐Lubricate door hinges, locks, and latches with multipurpose grease. ☐Inspect tie rod ends, steering gear box and boots. ☐Inspect suspension components. ☐Inspect driveshaft boots.
C	☐Check parking brake adjustment. ☐Inspect brake hoses and lines (including ABS). ☐Check all fluid levels, condition of fluids, and check for leaks. ☐#Inspect exhaust system. ☐#Inspect fuel lines and connections. ☐Check all lights. ☐Inspect the underbody.
D	☐Inspect and adjust drive belts. ☐Replace dust and pollen filter*.
E	☐Replace air cleaner element every 15,000 mi/ 24,000 km (independent of time) under dusty conditions, otherwise use Normal Conditions schedule.

CONTINUED

65,000 mi/104,000 km/6-½ yrs	Do item in A.
70,000 mi/112,000 km/4 yrs	Do item in B.
70,000 mi/112,000 km/7 yrs	Do item in A.
75,000 mi/120,000 km	Do item in E.
75,000 mi/120,000 km/7-½ yrs	Do item in A.
80,000 mi/128,000 km/4 yrs	Do items in B, C.
80,000 mi/128,000 km/8 yrs	Do item in A.
85,000 mi/136,000 km/8-½ yrs	Do item in A.
90,000 mi/144,000 km	Do item in E.
90,000 mi/144,000 km/5 yrs	☐Replace transmission fluid (A/T). ☐Replace rear differential fluid (4WD). Do items in B, D.
90,000 mi/144,000 km/9 yrs	Do item in A.
95,000 mi/152,000 km/9-½ yrs	Do item in A.
100,000 mi/160,000 km/5 yrs	Do items in B, C.
100,000 mi/160,000 km/10 yrs	Do item in A.
105,000 mi/168,000 km	Do item in E.
105,000 mi/168,000 km/10-½ yrs	Do item in A.
6 yrs	☐Replace brake fluid (independent of mileage).
110,000 mi/176,000 km	☐Inspect valve clearance, cold engine. ☐Replace spark plugs.
110,000 mi/176,000 km/6 yrs	Do item in B.
110,000 mi/176,000 km/11 yrs	Do item in A.
115,000 mi/184,000 km/11-½ yrs	Do item in A.
120,000 mi/192,000 km	Do item in E.
120,000 mi/192,000 km/6 yrs	☐Replace transmission fluid (M/T). Do items in B, C, D.
120,000 mi/192,000 km/7 yrs	☐Replace transmission fluid (A/T).
120,000 mi/192,000 km/10 yrs	☐Replace engine coolant, then replace every 60,000 mi/96,000 km/5 yrs.
120,000 mi/192,000 km/12 yrs	Do item in A.
160,000 mi/256,000 km/8 years	☐Inspect idle speed.

*: See dust and pollen filter on page 275 for replacement information under special driving conditions.

#: See information on maintenance and emissions warranty, last column, page 237.

NOTE:

- Check engine oil and coolant at each fuel stop.
- Check and adjust valve clearance, cold engine, only if noisy.

Required Maintenance Record (for Normal and Severe Schedules)

You or the servicing dealer can record all completed maintenance here, whether you follow the schedule for normal conditions (page 238) or severe conditions (page 240). Keep the receipts for all work done on your vehicle.

5,000 mi 8,000 km	Signature or dealer stamp	mi/km Date
10,000 mi 16,000 km		mi/km Date
15,000 mi 24,000 km		mi/km Date
20,000 mi 32,000 km (or 1 year)		mi/km Date
25,000 mi 40,000 km		mi/km Date
30,000 mi 48,000 km		mi/km Date

35,000 mi 56,000 km	Signature or dealer stamp	mi/km Date
40,000 mi 64,000 km (or 2 years)		mi/km Date
45,000 mi 72,000 km		mi/km Date
50,000 mi 80,000 km		mi/km Date
55,000 mi 88,000 km		mi/km Date
60,000 mi 96,000 km (or 3 years)		mi/km Date

CONTINUED

Required Maintenance Record (for Normal and Severe Schedules)

65,000 mi 104,000 km	Signature or dealer stamp	mi/km Date
70,000 mi 112,000 km		mi/km Date
75,000 mi 120,000 km		mi/km Date
80,000 mi 128,000 km (or 4 years)		mi/km Date
85,000 mi 136,000 km		mi/km Date
90,000 mi 144,000 km		mi/km Date

95,000 mi 152,000 km	Signature or dealer stamp	mi/km Date
100,000 mi 160,000 km (or 5 years)		mi/km Date
105,000 mi 168,000 km		mi/km Date
110,000 mi 176,000 km		mi/km Date
115,000 mi 184,000 km		mi/km Date
120,000 mi 192,000 km (or 6 years)		mi/km Date

Owner Maintenance Checks

You should check the following items at the specified intervals. If you are unsure of how to perform any check, turn to the page given.

- Engine oil level — Check every time you fill the fuel tank. See page 188 .
- Engine coolant level — Check the radiator reserve tank every time you fill the fuel tank. See page 189 .
- Windshield washer fluid — Check the level in the reservoir monthly. If weather conditions cause you to use the washers frequently, check the reservoir each time you stop for fuel. See page 258 .
- Automatic transmission — Check the fluid level monthly. See page 260 .
- Brakes — Check the fluid level monthly. See page 263 .
- Tires — Check the tire pressure monthly. Examine the tread for wear and foreign objects. See page 278 .
- Lights — Check the operation of the headlights, parking lights, taillights, high-mount brake light, turn signals, brake lights, and license plate light monthly. See page 285 .

Fluid Locations

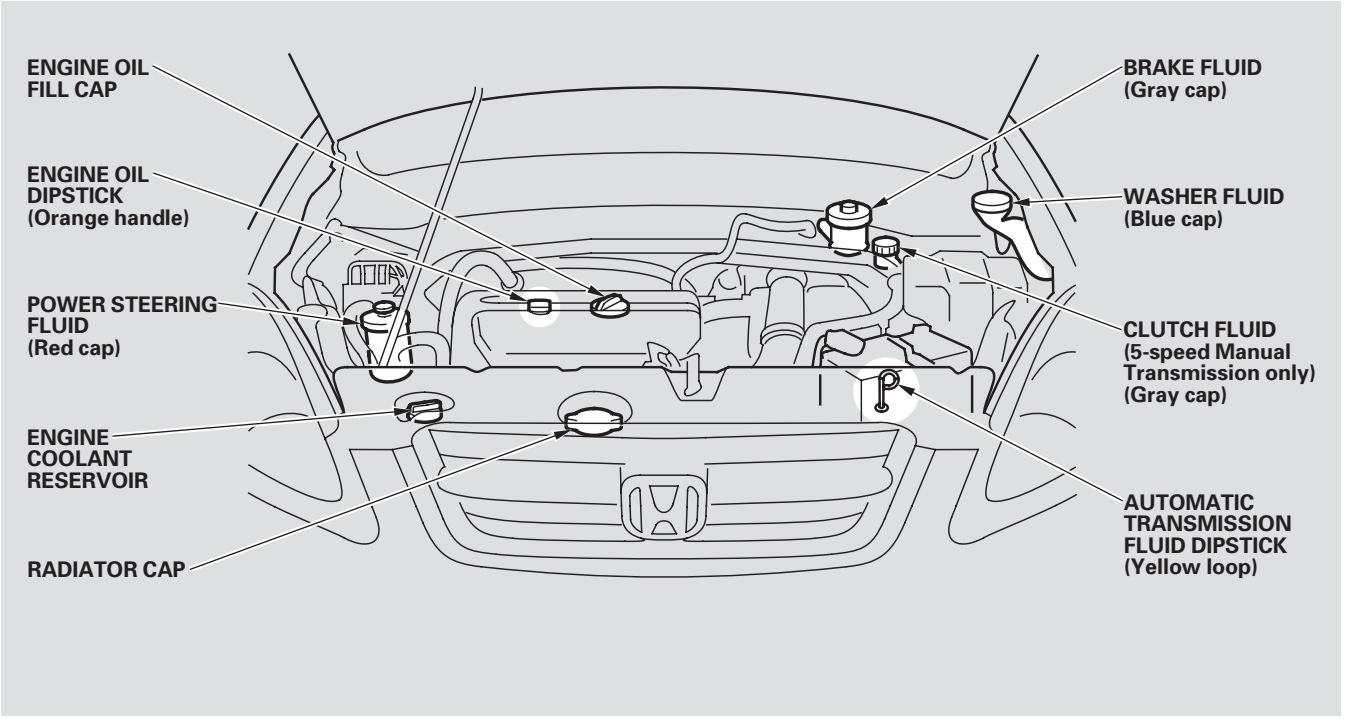

Adding Oil

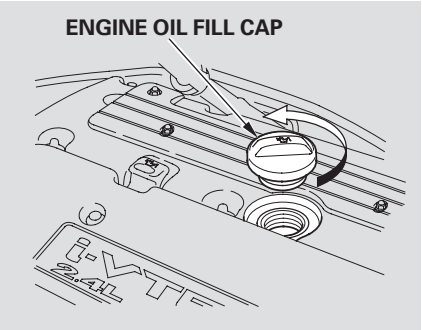

To add oil, unscrew and remove the engine oil fill cap on top of the valve cover. Pour in the oil, and install the engine oil fill cap. Tighten it securely. Wait a few minutes and recheck the oil level. Do not fill above the upper mark; you could damage the engine. Pour the oil slowly and carefully so you do not spill. Clean up any spills immediately. Spilled oil could damage components in the engine compartment.

Recommended Oil

Oil is a major contributor to your engine's performance and longevity. Always use a premium-grade 5W-20 detergent oil displaying the API Certification Seal. This seal indicates the oil is energy conserving, and that it meets the American Petroleum Institute's latest requirements.

Honda Motor Oil is the preferred 5W-20 lubricant for your vehicle. It is highly recommended that you use Honda Motor Oil in your vehicle for optimum engine protection.

Make sure the API Certification Seal says "For Gasoline Engines."

API CERTIFICATION SEAL

CONTINUED

Engine Oil

The oil's viscosity or weight is provided on the container's label. Select the oil for your vehicle according to this chart.

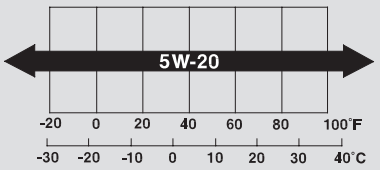

Ambient Temperature

5W-20 oil is formulated for year-round protection of your Honda, to improve cold weather starting, and to help your engine use less fuel.

Synthetic Oil

You may use a synthetic motor oil if it meets the same requirements given for a conventional motor oil: it displays the API Certification Seal, and it is the proper weight as shown on the chart. When using synthetic oil, you must follow the oil and filter change intervals given in the maintenance schedule.

Additives

Your Honda does not require any oil additives. Additives may adversely affect your engine's or transmission's performance and durability.

Engine Oil

Changing the Oil and Filter

Always change the oil and filter according to the time and distance (miles/kilometers) recommendations in the maintenance schedule. The oil and filter collect contaminants that can damage your engine if they are not removed regularly.

Changing the oil and filter requires special tools and access from underneath the vehicle. The vehicle should be raised on a service station-type hydraulic lift for this service. Unless you have the knowledge and proper equipment, you should have this maintenance done by a skilled mechanic.

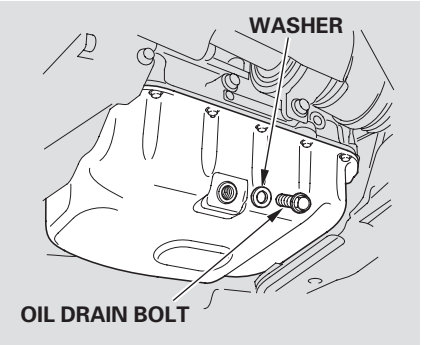

1. Run the engine until it reaches normal operating temperature, then shut it off.

2. Open the hood and remove the engine oil fill cap. Remove the oil drain bolt and washer from the bottom of the engine. Drain the oil into an appropriate container.

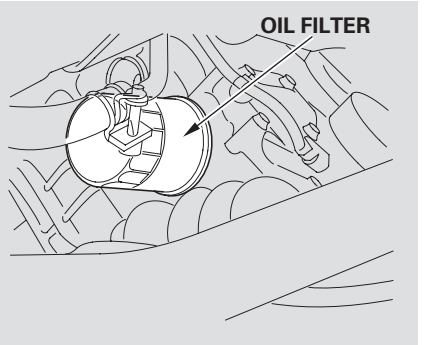

3. Remove the oil filter and let the remaining oil drain. A special wrench (available from your Honda dealer) is required to remove the filter.

4. Install a new oil filter according to instructions that come with it.

CONTINUED

Engine Oil

5. Put a new washer on the drain bolt, then reinstall the drain bolt. Tighten it to:
   33 lbf·ft (44 N·m , 4.5 kgf·m)

6. Refill the engine with the recommended oil.

   Engine oil change capacity (including filter):
   4.4 US qt (4.2 ℓ)

7. Replace the engine oil fill cap. Start the engine. The oil pressure indicator light should go out within five seconds. If it does not, turn off the engine and reinspect your work.

8. Let the engine run for several minutes, then check the drain bolt and oil filter for leaks.

9. Turn off the engine, let it sit for several minutes, then check the oil level. If necessary, add oil to bring the level to the upper mark on the dipstick.

NOTICE

Improper disposal of engine oil can be harmful to the environment. If you change your own oil, please dispose of the used oil properly. Put it in a sealed container and take it to a recycling center. Do not discard it in a trash bin or dump it on the ground.

Adding Engine Coolant

If the coolant level in the reserve tank is at or below the MIN line, add coolant to bring it up to the MAX line. Inspect the cooling system for leaks. The coolant you add should always be a mixture of 50 percent antifreeze and 50 percent water. Never add straight antifreeze or plain water.

Always use Honda All Season Antifreeze/Coolant Type 2. This coolant is pre-mixed with 50 percent antifreeze and 50 percent water. It does not require any additional mixing. If it is not available, you may use another major-brand non-silicate coolant as a temporary replacement. Make sure it is a high-quality coolant recommended for aluminum engines. However, continued use of any non-Honda coolant can result in corrosion, causing the cooling system to malfunction or fail. Have the cooling system flushed and refilled with Honda antifreeze/coolant as soon as possible.

If the reserve tank is completely empty, you should also check the coolant level in the radiator.

⚠ WARNING

Removing the radiator cap while the engine is hot can cause the coolant to spray out, seriously scalding you.

Always let the engine and radiator cool down before removing the radiator cap.

1. Make sure the engine and radiator are cool.

CONTINUED

Cooling System

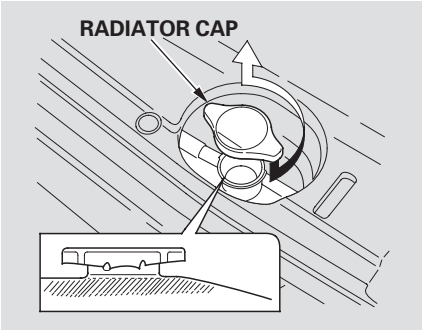

2. Turn the radiator cap counter-clockwise, without pressing down on it, until it stops. This relieves any pressure remaining in the cooling system.

3. Remove the radiator cap by pushing down and turning counterclockwise.

4. The coolant level should be up to the base of the filler neck. Add coolant if it is low.

   Pour the coolant slowly and carefully so you do not spill. Clean up any spills immediately. Spilled coolant could damage components in the engine compartment.

5. Put the radiator cap back on. Tighten it fully.

6. Pour coolant into the reserve tank. Fill it to halfway between the MAX and MIN marks. Put the cap back on the reserve tank.

   Do not add any rust inhibitors or other additives to your vehicle's cooling system. They may not be compatible with the coolant or engine components.

Replacing Engine Coolant
The cooling system should be completely drained and refilled with new coolant according to the time and distance recommendations in the maintenance schedule. Only use Honda All Season Antifreeze/ Coolant Type 2.

Draining the coolant requires access to the underside of the vehicle. Unless you have the tools and knowledge, you should have this maintenance done by a skilled mechanic.

1. Turn the ignition ON (II). Turn the heater temperature control dial fully clockwise. Turn the ignition off.

2. Open the hood. Make sure the engine and radiator are cool to the touch.

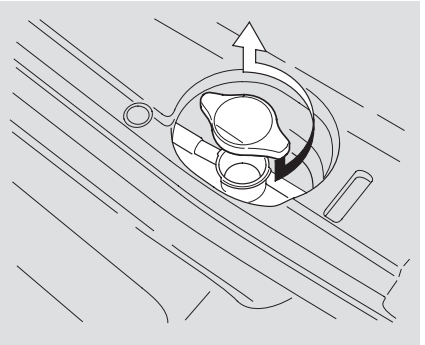

3. Remove the radiator cap.

CONTINUED

Cooling System

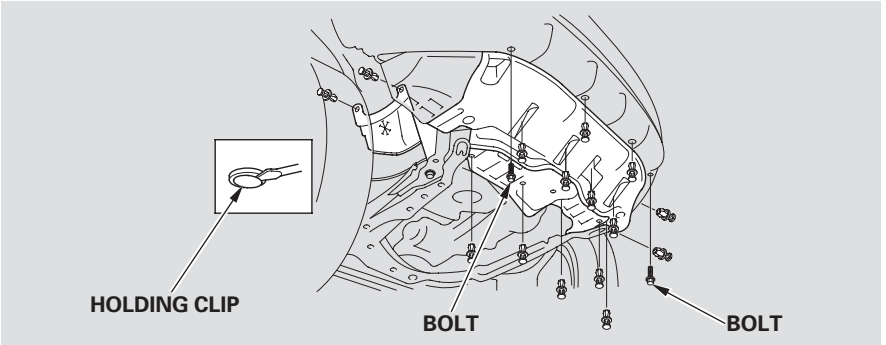

4. Before draining the coolant, remove the cover under the radiator. Use a phillips-head screwdriver to remove the two bolts, and remove the sixteen holding clips from the cover (12 clips on the bottom and 4 clips on the side) with a flat-tipped screwdriver. Then pull the cover down.

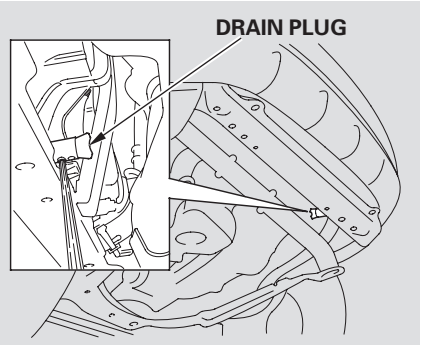

5. Loosen the drain plug on the bottom of the radiator. Drain the coolant into an appropriate container.

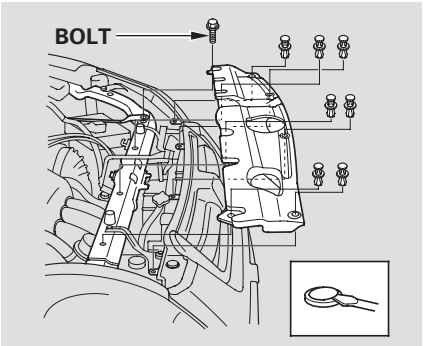

6. To drain the coolant from the reserve tank:

   Use a wrench to remove the bolt from the battery hold-down. Remove the seven holding clips from the cover by using a flat-tipped screwdriver. Then pull the bulkhead cover away.

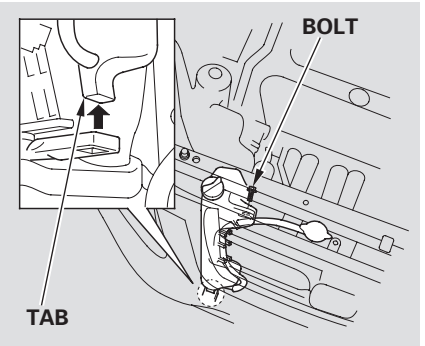

7. Remove the reserve tank mounting bolt with a wrench, pull out the coolant tube from the two clips on the upper and lower side of the fan shroud, then move the reserve tank away from the fan shroud while pulling the bottom tab of the reserve tank out of the hole.

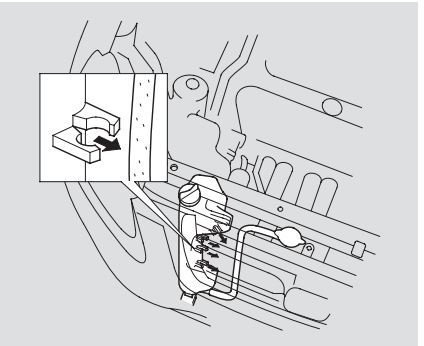

8. Remove the coolant tube from the four clips.

CONTINUED

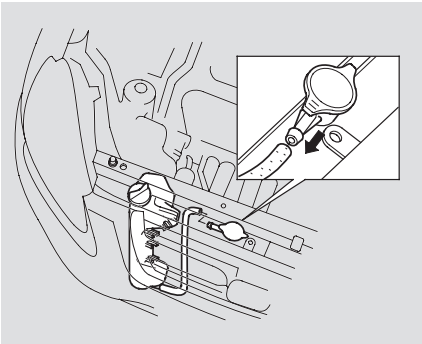

9. Remove the coolant tube from the radiator.

10. Put the end of the coolant tube lower than the coolant reserve tank and drain the coolant into an appropriate container.

11. Put the coolant tube back in the clips and reinstall the coolant tube to the radiator securely.

12. Put the reserve tank back in place, making sure its bottom tab is in the holder. Reinstall and tighten the mounting bolt securely.

13. Reinstall the cover. Lock the holding clips by pushing on the center of the clip. Reinstall the bolt in the battery hold-down.

14. When the coolant stops draining, tighten the drain plug at the bottom of the radiator.

15. Put the cover back in place and tighten the bolts securely. Reinstall the 16 holding clips. Lock each clip in place by pushing on its center.

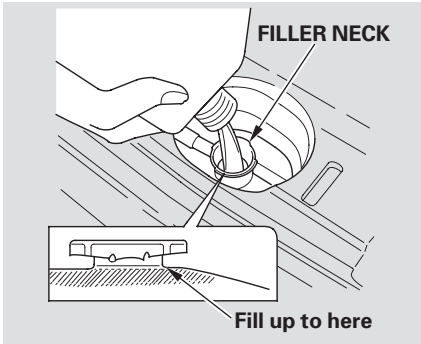

16. Pour Honda All Season Antifreeze/Coolant Type 2 into the radiator up to the base of the filler neck. This coolant is a mixture of 50 percent antifreeze and 50 percent water. Pre-mixing is not required.

The cooling system capacity is:

With automatic transmission:
1.43 US gal (5.4 ℓ)

With manual transmission:
1.45 US gal (5.5 ℓ)

17. Start the engine and let it run for about 30 seconds. Then turn off the engine.

18. Check the level in the radiator, add coolant if needed.

19. Fill the reserve tank to the MAX mark. Install the reserve tank cap.

20. Install the radiator cap, and tighten it to the first stop.

21. Start the engine and let it run until the radiator cooling fan comes on at least twice. Then stop the engine.

22. Remove the radiator cap. Fill the radiator with coolant up to the base of the filler neck.

23. Start the engine and hold it at 1,500 rpm until the radiator fan comes on. Turn off the engine. Check the coolant level in the radiator and add coolant if needed.

24. Install the radiator cap, and tighten it fully.

25. If necessary, fill the reserve tank to the MAX mark. Install the reserve tank cap.

Windshield Washers

Check the level in the windshield washer reservoir at least monthly during normal usage. In bad weather, when you use the washers often, check the level every time you stop for fuel. This reservoir supplies both the windshield and rear window washers.

Canadian models
The low washer level indicator will light when the level is low (see page 69).

The windshield washer reservoir is located in the back of the engine compartment on the left side.

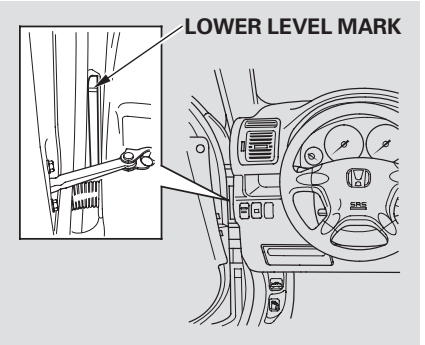

Check the windshield washer fluid level as follows:

1. Open the driver's door.

2. Look at the side of the reservoir tank located between the door and the front dashboard.

3. If the fluid level is below the lower level mark, locate the reservoir cap in the engine compartment. Remove the cap and fill the reservoir with windshield washer fluid.

4. Reinstall the cap.

Windshield Washers

Fill the reservoir with a good-quality windshield washer fluid. This increases the cleaning capability and prevents freezing in cold weather.

When you refill the reservoir, clean the edges of the windshield wiper blades with windshield washer fluid on a clean cloth. This will help to condition the blade edges.

NOTICE

Do not use engine antifreeze or a vinegar/water solution in the windshield washer reservoir.

Antifreeze can damage your vehicle's paint, while a vinegar/water solution can damage the windshield washer pump.

Use only commercially-available windshield washer fluid.

Transmission Fluid

Automatic Transmission

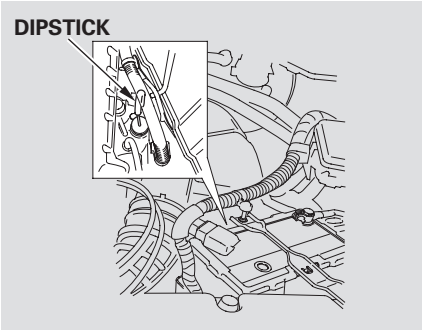

Check the fluid level with the engine at normal operating temperature.

1. Park the vehicle on level ground. Shut off the engine.

2. Remove the dipstick (yellow loop) from the transmission and wipe it with a clean cloth.

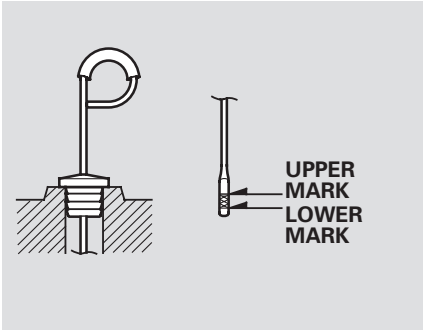

3. Insert the dipstick all the way into the transmission as shown.

4. Remove the dipstick and check the fluid level. It should be between the upper and lower marks.

5. If the level is below the lower mark, add fluid into the filler hole to bring it to the upper mark.

   Always use Honda ATF-Z1 (Automatic Transmission Fluid). If it is not available, you may use a DEXRON® III automatic transmission fluid as a temporary replacement. However, continued use can affect shift quality. Have the transmission flushed and refilled with Honda ATF-Z1 as soon as it is convenient.

To thoroughly flush the transmission, the technician should drain and refill it with Honda ATF-Z1, then drive the vehicle a short distance. Do this three times. Then drain and refill the transmission a final time.

Transmission Fluid

6. Insert the dipstick all the way back into the transmission securely as shown in the illustration.

The transmission should be drained and refilled with new fluid according to the time and distance recommendations in the maintenance schedule.

5-speed Manual Transmission

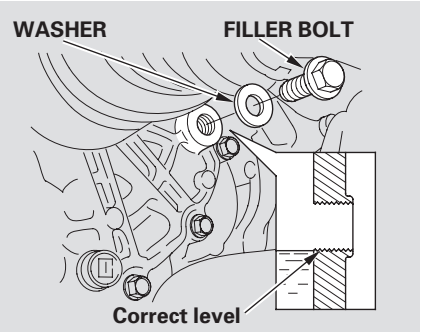

Check the fluid level with the transmission at normal operating temperature and the vehicle sitting on level ground. Remove the transmission filler bolt and carefully feel inside the bolt hole with your finger. The fluid level should be up to the edge of the bolt hole. If it is not, add Honda Manual Transmission Fluid (MTF) until it starts to run out of the hole.

Put a new washer on the filler bolt, then reinstall the filler bolt and tighten it securely.

If Honda MTF is not available, you may use an SAE 10W-30 or 10W-40 viscosity motor oil with the API Certification seal that says “FOR GASOLINE ENGINES” as a temporary replacement. However, motor oil does not contain the proper additives and continued use can cause stiffer shifting. Replace as soon as it is convenient.

The transmission should be drained and refilled with new fluid according to the time and distance recommendations in the maintenance schedule.

Rear Differential Fluid

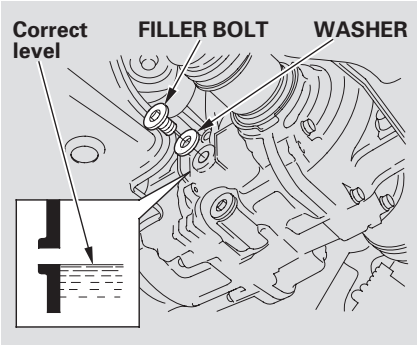

4WD models only
Check the fluid level with the rear differential at normal operating temperature and the vehicle sitting on level ground. Remove the differential fluid filler bolt and washer and carefully feel inside the bolt hole with your finger. The fluid level should be up to the edge of the bolt hole. If it is not, slowly add Honda Dual Pump Fluid until it starts to run out of the hole.

Put a new washer on the filler bolt, then reinstall the filler bolt and tighten it securely.

Only use Honda Dual Pump Fluid. Do not use Automatic Transmission Fluid (ATF).

The rear differential should be drained and refilled with new fluid according to the time and distance recommendations in the maintenance schedule.

Brake and Clutch Fluid

Check the fluid level in the reservoirs monthly. There are up to two reservoirs, depending on the model. They are:

- Brake fluid reservoir (all models)
- Clutch fluid reservoir (manual transmission only)

The brake fluid should be replaced according to the time recommendation in the maintenance schedule.

Always use Honda Heavy Duty Brake Fluid DOT 3. If it is not available, you should use only DOT 3 or DOT 4 fluid, from a sealed container, as a temporary replacement. However, the use of any non-Honda brake fluid can cause corrosion and decrease the life of the system. Have the brake system flushed and refilled with Honda Heavy Duty Brake Fluid DOT 3 as soon as possible.

Brake fluid marked DOT 5 is not compatible with your vehicle's braking system and can cause extensive damage.

Brake System

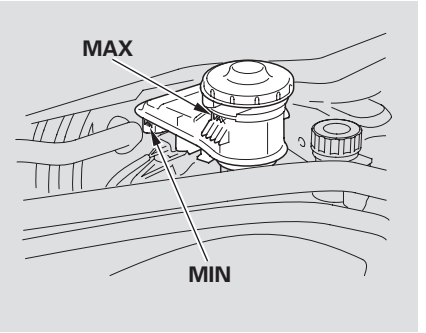

The fluid level should be between the MIN and MAX marks on the side of the reservoir. If the level is at or below the MIN mark, your brake system needs attention. Have the brake system inspected for leaks or worn brake pads.

Brake and Clutch Fluid, Power Steering

Clutch System

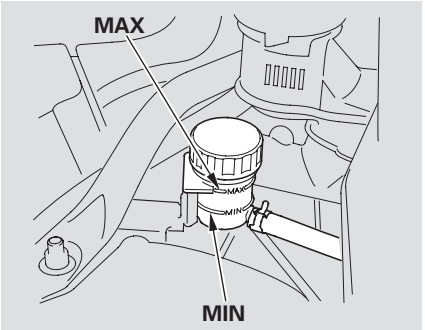

The fluid level should be between the MIN and MAX marks on the side of the reservoir. If it is not, add brake fluid to bring it up to that level. Use the same fluid specified for the brake system.

Low fluid level can indicate a leak in the clutch system. Have this system inspected as soon as possible.

Power Steering

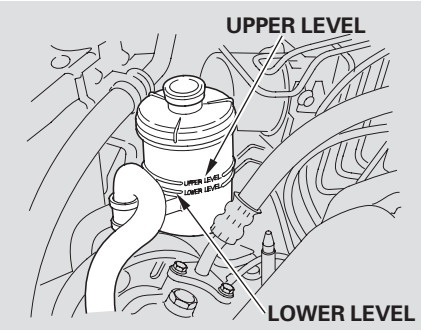

Check the level when the engine is cold. Look at the side of the reservoir. The fluid should be between the UPPER LEVEL and LOWER LEVEL. If it is below the LOWER LEVEL, add power steering fluid to the UPPER LEVEL.

Always use Honda Power Steering Fluid. If it is not available, you may use another power steering fluid as an emergency replacement. However, continued use can cause increased wear and poor steering in cold weather. Have the power steering system flushed and refilled with Honda PSF as soon as possible.

A low power steering fluid level can indicate a leak in the system. Check the fluid level frequently and have the system inspected as soon as possible.

NOTICE

Turning the steering wheel to full left or right lock and holding it there can damage the power steering pump.

Air Cleaner Element

The air cleaner element should be replaced according to the distance recommendation in the maintenance schedule.

Replacement

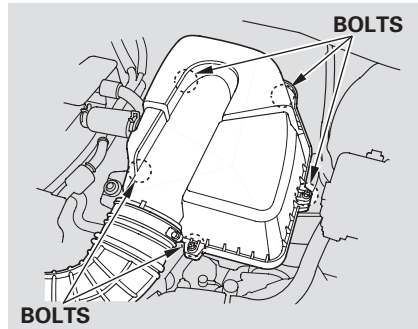

The air cleaner element is inside the air cleaner housing on the left side of the engine compartment.

To replace it:

1. Loosen the five bolts with a Phillips-head screwdriver or a wrench, then lift up the air cleaner housing cover.

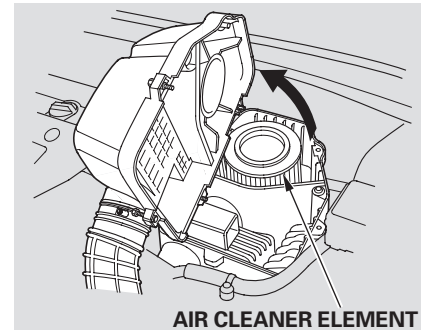

2. Remove the old air cleaner element.

3. Carefully clean the inside of the air cleaner housing with a damp rag.

CONTINUED

Air Cleaner Element, Hood Latch

4. Place the new air cleaner element in the air cleaner housing.

5. Reinstall the air cleaner housing cover, and tighten the five bolts.

Hood Latch

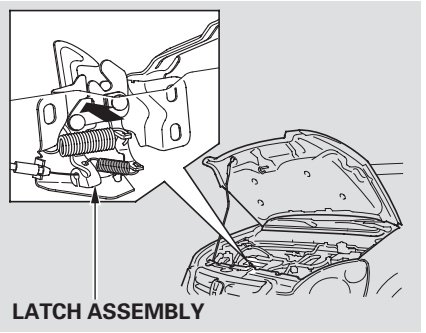

Clean the hood latch assembly with a mild cleaner, then lubricate it with a multipurpose grease. Lubricate all the moving parts (as shown), including the pivot. Follow the time and distance recommendations in the Maintenance Schedule. If you are not sure how to clean and grease the latch, contact your Honda dealer.

Spark Plugs

The spark plugs in your vehicle are a special iridium-tipped design for longer life. The spark plugs should be replaced according to the distance recommendation in the maintenance schedule.

Replacement

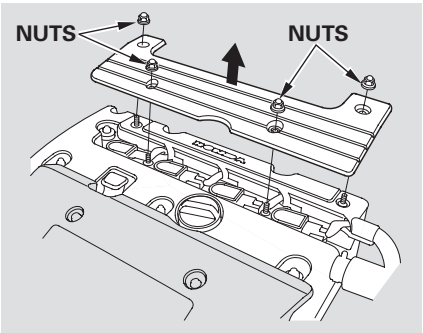

1. Remove the four nuts with a wrench, then remove the coil cover.

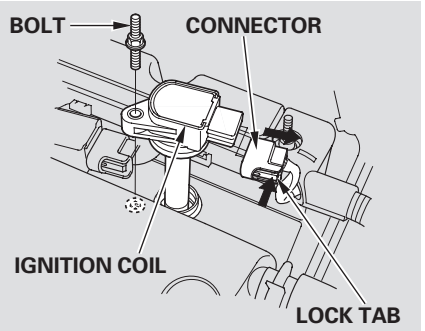

2. Clean off any dirt and oil that have collected around the ignition coils.

3. Use a wrench to remove the bolt holding the ignition coil. Pull the ignition coil up slightly.

4. Disconnect the wire connector from the ignition coil by pushing on the lock tab and pulling on the connector. Pull on the plastic connector, not the wires.

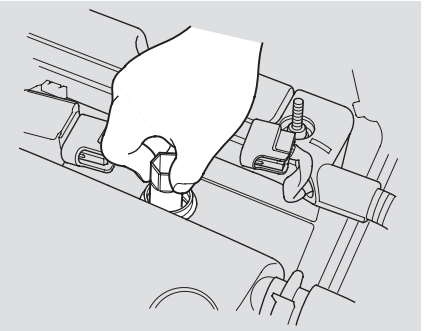

5. Remove the ignition coil.

6. Remove the spark plug with a five-eighths inch (16 mm) spark plug socket.

7. Put the new spark plug into the socket, then screw it into the hole. Screw it in by hand so you do not crossthread it.

CONTINUED

Spark Plugs

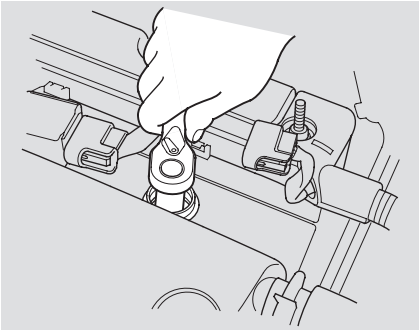

8. Torque the spark plug. (If you do not have a torque wrench, tighten the spark plug two-thirds of a turn after it contacts the cylinder head.)
   Tightening torque:
   13 lbf·ft (18 N·m , 1.8 kgf·m)

NOTICE

Tighten the spark plugs carefully. A spark plug that is too loose can overheat and damage the engine. Overtightening can cause damage to the threads in the cylinder head.

9. Install the ignition coil into the hole.

10. Connect the wire connector to the ignition coil. Make sure it locks in place.

11. Push the ignition coil down all the way. Install the bolt.

12. Repeat this procedure for the other three spark plugs.

13. Reinstall the coil cover, and tighten the four nuts.

Specifications:

NGK:	IZFR6K-11
DENSO:	SKJ20DR-M11

Battery

Check the condition of your vehicle's battery monthly. You should check the color of the test indicator window, and for corrosion on the terminals.

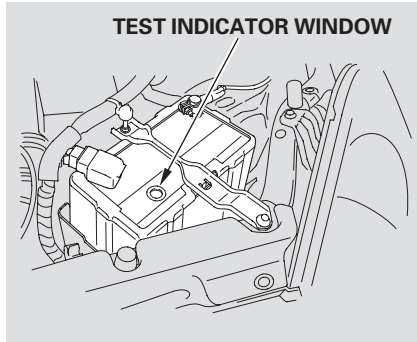

Check the battery condition by looking at the test indicator window on the battery. The label on the battery explains the test indicator's colors.

Check the battery terminals for corrosion (a white or yellowish powder). To remove it, cover the terminals with a solution of baking soda and water. It will bubble up and turn brown. When this stops, wash it off with plain water. Dry off the battery with a cloth or paper towel. Coat the terminals with grease to help prevent future corrosion.

WARNING: Battery posts, terminals, and related accessories contain lead and lead compounds. **Wash hands after handling.**

CONTINUED

Battery

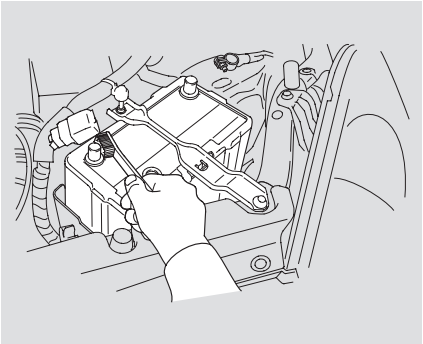

If the terminals are severely corroded, clean them with baking soda and water. Then use a wrench to loosen and remove the cables from the terminals. Always disconnect the negative (−) cable first and reconnect it last. Clean the battery terminals with a terminal cleaning tool or wire brush. Reconnect and tighten the cables, then coat the terminals with grease.

If you need to connect the battery to a charger, disconnect both cables to prevent damage to the vehicle's electrical system.

⚠WARNING

The battery gives off explosive hydrogen gas during normal operation.

A spark or flame can cause the battery to explode with enough force to kill or seriously hurt you.

Wear protective clothing and a face shield, or have a skilled mechanic do the battery maintenance.

NOTICE

Charging the battery with the cables connected can seriously damage your vehicle's electronic controls. Detach the battery cables before connecting the battery to a charger.

If your vehicle's battery is disconnected or goes dead, the audio system will disable itself. The next time you turn on the radio you will see " CodE " in the frequency display. Use the Preset buttons to enter the five-digit code (see page 178). You will then have to set the clock and enter your station presets.

Wiper Blades

Check the condition of the wiper blades at least every six months. Look for signs of cracking in the rubber, or areas that are getting hard. Replace the blades if you find these signs, or if they leave streaks and unwiped areas when used.

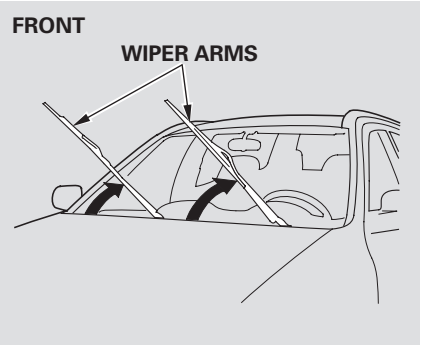

To replace a wiper blade:

1. Front:
   Raise the wiper arm off the windshield.

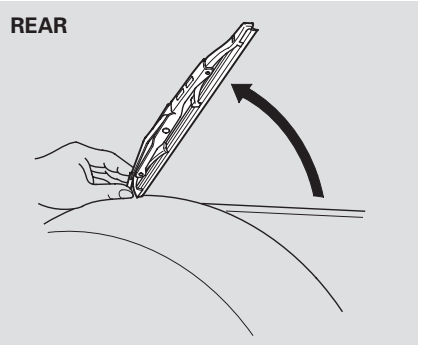

Rear:
Raise the wiper arm off the hatch glass and hold it.

CONTINUED

Wiper Blades

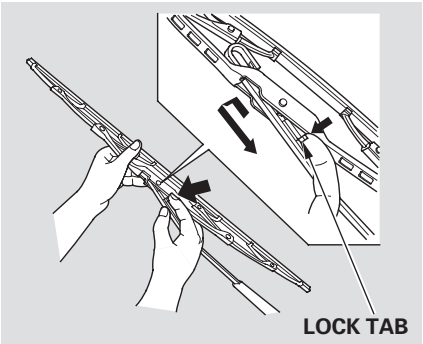

2. Disconnect the blade assembly from the wiper arm by pushing in the lock tab. Hold the lock tab in while you push the blade assembly toward the base of the arm.

   If you are changing the rear wiper blade, go to step 6.

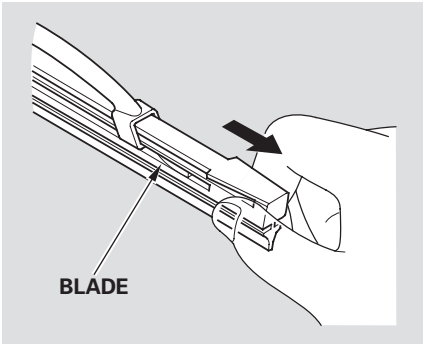

3. Remove the blade from its holder by grasping the tabbed end of the blade. Pull firmly until the tabs come out of the holder.

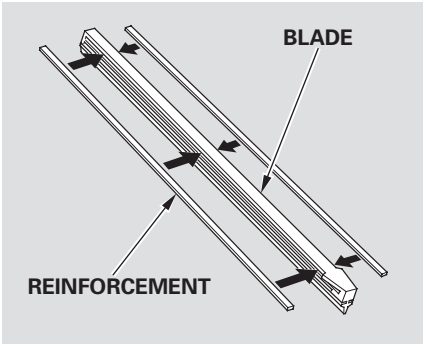

4. Examine the new wiper blades. If they have no plastic or metal reinforcement along the back edge, remove the metal reinforcement strips from the old wiper blade and install them in the slots along the edge of the new blade.

Wiper Blades

5. Slide the new wiper blade into the holder until the tabs lock.

6. Slide the wiper blade assembly onto the wiper arm. Make sure it locks in place.

7. Lower the wiper arm down against the windshield or the hatch glass.

Air Conditioning System

Your vehicle's air conditioning is a sealed system. Any major maintenance, such as recharging, should be done by a qualified mechanic. You can do a couple of things to make sure the air conditioning works efficiently.

Periodically check the engine's radiator and air conditioning condenser for leaves, insects, and dirt stuck to the front surface. These block the air flow and reduce cooling efficiency. Use a light spray from a hose or a soft brush to remove them.

NOTICE

The condenser and radiator fins bend easily. Only use a low-pressure spray or soft-bristle brush to clean them.

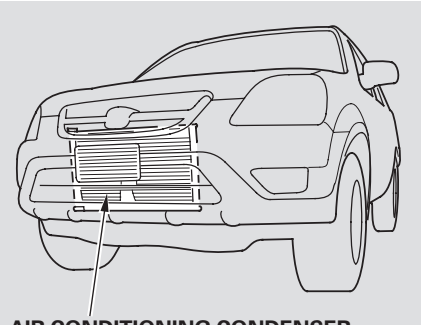

AIR CONDITIONING CONDENSER

Run the air conditioning at least once a week during the cold weather months. Run it for at least ten minutes while you are driving at a steady speed with the engine at normal operating temperature. This circulates the lubricating oil contained in the refrigerant.

If the air conditioning does not get as cold as before, have your dealer check the system. Recharge the system with Refrigerant HFC-134a (R-134a). (See Specifications on page 343.)

NOTICE

Whenever you have the air conditioning system serviced, make sure the service facility uses a refrigerant recycling system. This system captures the refrigerant for reuse. Releasing refrigerant into the atmosphere can damage the environment.

Dust and Pollen Filter

The dust and pollen filter removes pollen and dust that is brought in from the outside through the heating and cooling system.

This filter should be replaced every 30,000 miles (48,000 km) under normal conditions. It should be replaced every 15,000 miles (24,000 km) if you drive primarily in urban areas that have high concentrations of soot in the air from industry and diesel-powered vehicles. Replace it more often if air flow from the heating and cooling system becomes less than usual.

Replacement

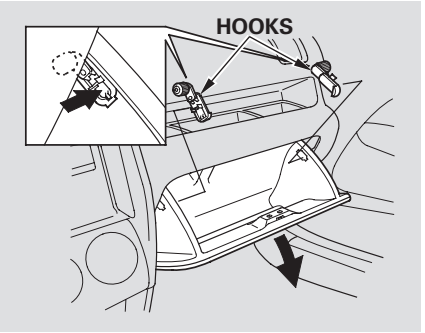

The dust and pollen filter is located behind the glove box.

To replace it:

1. Open the glove box. Remove the hooks on the side panels by pushing on the end of each hook from the inside of the glove box. Pivot the glove box out of the way.

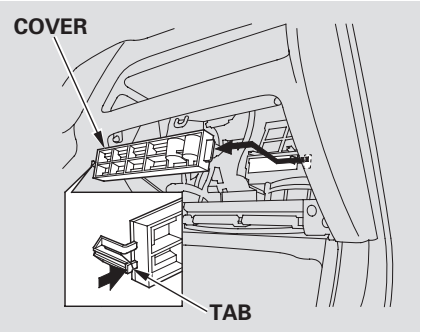

2. Remove the dust and pollen filter cover by pushing in on the lock tab, then pulling the cover toward you.

CONTINUED

Dust and Pollen Filter

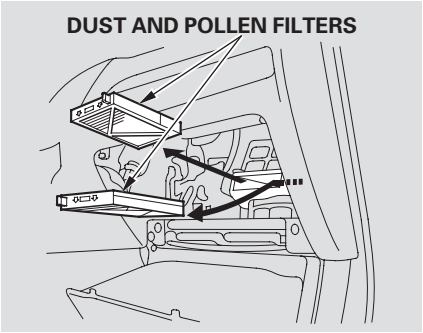

3. Remove the first filter by pulling it straight out of the air conditioning unit. Remove the second filter by sliding it to the left, then pulling it out.

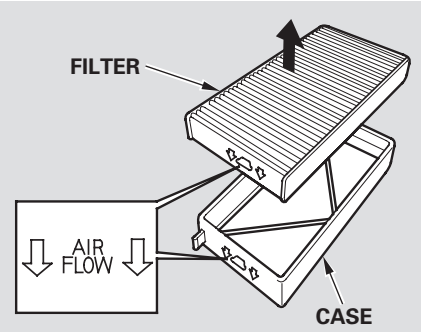

4. Remove the old filter from the filter case.

5. Install the new filter in the case. Make sure the “AIR FLOW” arrows on the filter and the filter case face the same direction.

6. Install the dust and pollen filters into the air conditioning unit. Make sure the “AIR FLOW” arrows on the filter point downward.

7. Reinstall the dust and pollen filter cover.

8. Pivot the glove box up into position. Reinstall the hooks into the side panel of the glove box. Close the glove box.

If you are not sure how to replace the dust and pollen filters, have them replaced by your Honda dealer.

Drive Belt

Check the condition of the drive belt. Examine the edges of the belt for cracks or fraying.

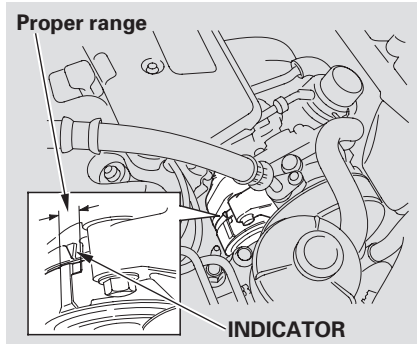

An auto-tensioner adjusts the tension of the drive belt. The pointer on the auto-tensioner should be in the proper range. It should be checked according to the time and distance recommendations in the maintenance schedule.

If the pointer is out of this range or you see signs of wear, have the drive belt replaced by your Honda dealer as soon as possible.

Tires

To safely operate your vehicle, your tires must be the proper type and size, in good condition with adequate tread, and correctly inflated. The following pages give more detailed information on how and when to check air pressure, how to inspect your tires for damage and wear, and what to do when your tires need to be replaced.

⚠ WARNING

Using tires that are excessively worn or improperly inflated can cause a crash in which you can be seriously hurt or killed.

Follow all instructions in this owner's manual regarding tire inflation and maintenance.

Inflation

Keeping the tires properly inflated provides the best combination of handling, tread life, and riding comfort. Underinflated tires wear unevenly, adversely affect handling and fuel economy, and are more likely to fail from being overheated. Overinflated tires can make your vehicle ride more harshly, are more prone to damage from road hazards, and wear unevenly.

We recommend that you visually check your tires every day. If you think a tire might be low, check it immediately with a tire gauge.

Use a gauge to measure the air pressure at least once a month. Even tires that are in good condition may lose one to two psi (10 to 20 kPa, 0.1 to 0.2 kgf/cm^2) per month. Remember to check the spare tire at the same time you check all the other tires.

Check the pressure in the tires when they are cold. This means the vehicle has been parked for at least three hours. If you have to drive the vehicle before checking the tire pressure, the tires can still be considered "cold" if you drive less than 1 mile (1.6 km).

Add or release air, if needed, to match the recommended cold tire pressures on page 279 .

Tires

If you check the pressure when the tires are hot [the vehicle has been driven several miles (kilometers)], you will see readings 4 to 6 psi (30 to 40 kPa, 0.3 to 0.4 kgf/cm²) higher than the cold reading. This is normal. Do not let air out to match the specified cold pressure. The tire will be underinflated.

You should get your own tire pressure gauge and use it whenever you check your tire pressures. This will make it easier for you to tell if a pressure loss is due to a tire problem and not due to a variation between gauges.

Recommended Tire Pressures for Normal Driving

The following chart shows the recommended cold tire pressures for most normal driving conditions and speeds.

Tire Size	Cold Tire Pressure for Normal Driving
P205/70R15 95S	Front/Rear: 26 psi (180 kPa , 1.8 kgf/cm²)

For convenience, the recommended tire sizes and cold air pressures are on a label on the driver's doorjamb.

For additional technical information about your tires, see page 343 .

Tubeless tires have some ability to self-seal if they are punctured. However, because leakage is often very slow, you should look closely for punctures if a tire starts losing pressure.

Tire Pressure Adjustment for High Speed Driving

Honda strongly recommends that you not drive faster than posted speed limits and conditions allow. If you decide it is safe to drive at high speeds, be sure to adjust the cold tire pressures as shown below. If you do not adjust the tire pressure, excessive heat can build up and cause sudden tire failure.

Tire Size	Cold Tire Pressure for Speed over 100 mph (160 km/h)
P205/70R15 95S	35 psi (240 kPa , 2.4 kgf/cm²)

When you return to normal speed driving, be sure to readjust the tire pressure for normal driving. You should wait until the tires are cold before adjusting the tire pressure.

Tires

Inspection

Every time you check inflation, you should also examine the tires for damage, foreign objects, and wear.

You should look for:

- Bumps or bulges in the tread or side of the tire. Replace the tire if you find either of these conditions.
- Cuts, splits, or cracks in the side of the tire. Replace the tire if you can see fabric or cord.
- Excessive tread wear.

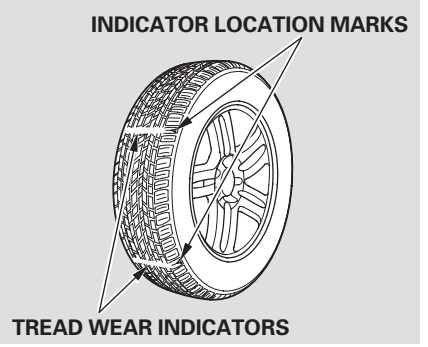

Your vehicle's tires have wear indicators molded into the tread. When the tread wears down to that point, you will see a 1/2 inch (12.7 mm) wide band running across the tread. This shows there is less than 1/16 inch (1.6 mm) of tread left on the tire. A tire that is this worn gives very little traction on wet roads. You should replace the tire if you can see the tread wear indicator in three or more places around the tire.

Maintenance

In addition to proper inflation, correct wheel alignment helps to decrease tire wear. If you find a tire is worn unevenly, have your dealer check the wheel alignment.

The tires were properly balanced by the factory. They may need to be rebalanced at some time before they are worn out. Have your dealer check the tires if you feel a consistent vibration while driving. A tire should always be rebalanced if it is removed from the wheel for repair.

Make sure the installer balances the wheels when you have new tires installed. This increases riding comfort and tire life. Your vehicle's original tires were dynamic or "spin" balanced at the factory. For best results, have the installer perform a dynamic balance.

NOTICE

(Only on vehicles equipped with aluminum wheels)
Improper wheel weights can damage your vehicle's aluminum wheels. Use only genuine Honda wheel weights for balancing.

Tire Rotation

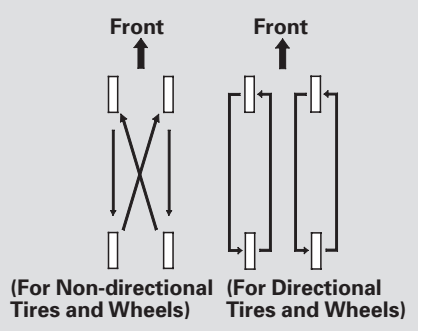

To help increase tire life and distribute wear more evenly, you should have the tires rotated every 10,000 miles (16,000 km). Move the tires to the positions shown in the chart each time they are rotated.

When shopping for replacement tires, you may find that some tires are "directional." This means they are designed to rotate only in one direction. If you use directional tires, they should be rotated only front-to-back.

Tires

Replacing Tires and Wheels

The tires that came with your vehicle were selected to match the performance capabilities of the vehicle while providing the best combination of handling, ride comfort, and long life. You should replace them with radial tires of the same size, load range, speed rating, and maximum cold tire pressure rating (as shown on the tire's sidewall). Mixing radial and bias-ply tires on your vehicle can reduce its braking ability, traction, and steering accuracy.

⚠ WARNING

Installing improper tires on your vehicle can affect handling and stability. This can cause a crash in which you can be seriously hurt or killed.

Always use the size and type of tires recommended in this owner's manual.

It is best to replace all four tires at the same time. If that is not possible or necessary, then replace the two front tires or the two rear tires as a pair. Replacing just one tire can seriously affect your vehicle's handling.

The ABS works by comparing the speed of the wheels. When replacing tires, use the same size originally supplied with the vehicle. Tire size and construction can affect wheel speed and may cause the system to work inconsistently.

If you ever need to replace a wheel, make sure the wheel's specifications match those of the original wheel that came on your vehicle. Replacement wheels are available at your Honda dealer.

Wheels and Tires

Wheels:
15 x 6JJ

Tires:
P205/70R15 95S

See page 344 for information about DOT Tire Quality Grading.

Winter Driving

Tires that are marked "M+S" or "All Season" on the sidewall have an all-weather tread design. They should be suitable for most winter driving conditions. Tires without these markings are designed for optimum traction in dry conditions. They may not provide adequate performance in winter driving.
For the best performance in snowy or icy conditions, you should install snow tires or tire chains. They may be required by local laws under certain conditions.

Snow Tires

If you mount snow tires on your Honda, make sure they are radial tires of the same size and load range as the original tires. Mount snow tires on all four wheels to balance your vehicle's handling in all weather conditions. Keep in mind the traction provided by snow tires on dry roads may not be as high as your vehicle's original equipment tires. You should drive cautiously even when the roads are clear. Check with the tire dealer for maximum speed recommendations.

CONTINUED

Tires

Tire Chains

Because your Honda has limited tire clearance, mount only SAE Class "S" cable-type traction devices on the front tires. Use traction devices only when required by driving conditions or local laws. Make sure they are the correct size for your tires.

Metal link-type "chains" should not be used. No matter how tight they seem to be installed, they can come into contact with the body and suspension, causing serious damage.

When installing cables, follow the manufacturer's instructions and mount them as tightly as you can. Drive slowly with them installed. If you hear them coming in contact with the body or chassis, stop and investigate. Make sure the cables are installed tightly, and that they are not contacting the brake lines or suspension. Remove them as soon as you begin driving on cleared roads.

NOTICE

Traction devices that are the wrong size or improperly installed can damage your vehicle's brake lines, suspension, body, and wheels. Stop driving if they are hitting any part of the vehicle.

Lights

Check the operation of your vehicle's exterior lights at least once a month. A burned out bulb can create an unsafe condition by reducing your vehicle's visibility and the ability to signal your intentions to other drivers.

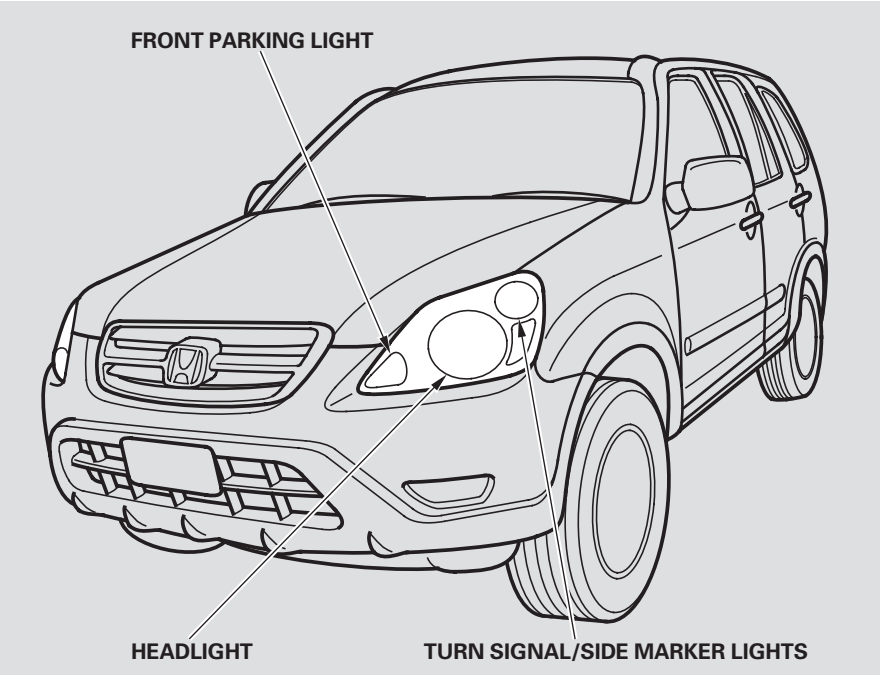

CONTINUED

Lights

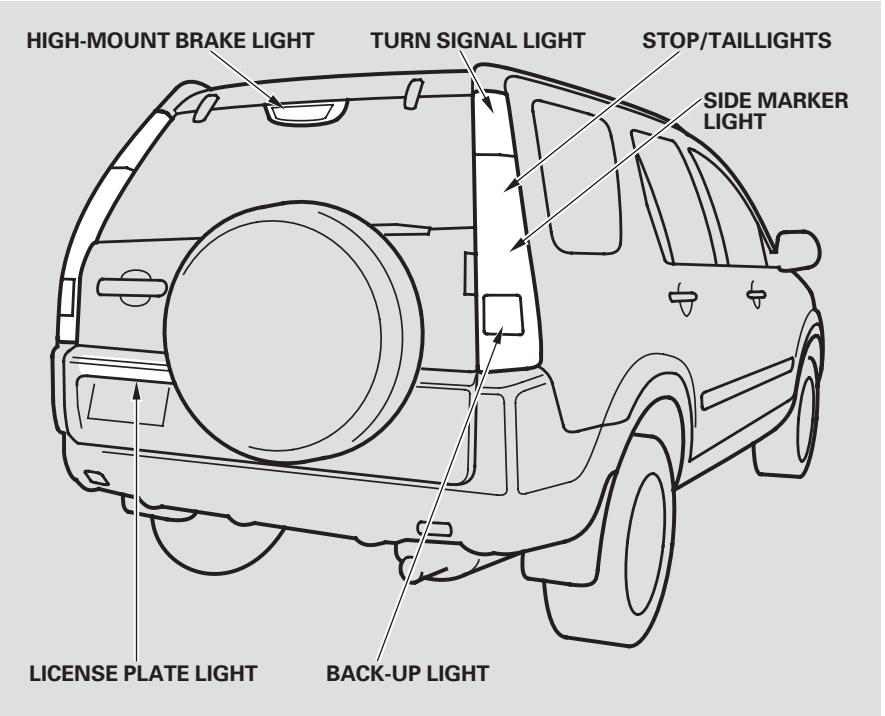

Check the following:

- Headlights (low and high beam)
- Parking lights
- Taillights
- Brake lights
- High-mount brake light
- Turn signals
- Back-up lights
- Hazard light function
- License plate light
- Side marker lights
- Daytime running lights (Canadian models)

If you find any bulbs are burned out, replace them as soon as possible. Refer to the chart on page 343 to determine what type of replacement bulb is needed.

Headlight Aiming

The headlights were properly aimed when your vehicle was new. If you regularly carry heavy items in the cargo area or pull a trailer, readjustment may be required. Adjustment of the headlights should be performed by a Honda technician or other qualified mechanic.

Replacing a Headlight Bulb

Your vehicle has halogen headlight bulbs, one on each side. When replacing a bulb, handle it by its steel base and protect the glass from contact with your skin or hard objects. If you touch the glass, clean it with denatured alcohol and a clean cloth.

NOTICE

Halogen headlight bulbs get very hot when lit. Oil, perspiration, or a scratch on the glass can cause the bulb to overheat and shatter.

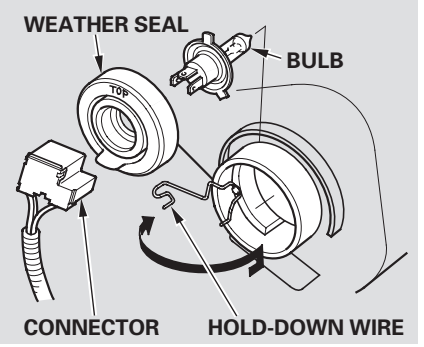

1. Open the hood.
2. Remove the electrical connector from the bulb by pulling the connector straight back.
3. Remove the rubber weather seal by pulling on the tab.

CONTINUED

4. Unclip the end of the hold-down wire from its slot. Pivot it out of the way and remove the bulb.

5. Insert the new bulb into the hole, making sure the tabs are in their slots. Pivot the hold-down wire back in place and clip the end into the slot.

6. Install the rubber seal over the back of the headlight assembly. Make sure it is right side up; it is marked "TOP."

7. Push the electrical connector onto the new bulb. Make sure it is connected securely.
   Turn on the headlights to test the new bulb.

Replacing a Front Side Marker/ Turn Signal Light Bulb

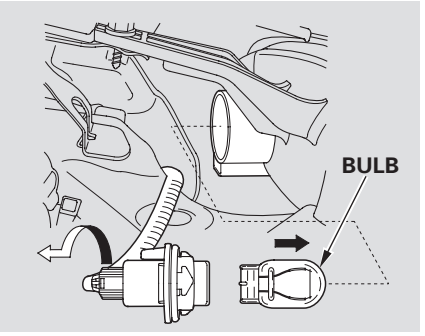

1. Open the hood. The front side marker/turn signal light is next to the headlight bulb.

2. Remove the socket from the headlight assembly by turning it one-quarter turn counterclockwise.

3. Pull the burned out bulb straight out of its socket. Push the new bulb straight into the socket until it bottoms.

4. Insert the socket back into the headlight assembly. Turn it clockwise to lock it in place.

5. Test the lights to make sure the new bulb is working.

Replacing a Front Parking Light Bulb

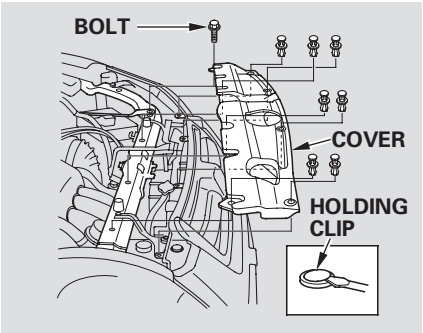

1. Open the hood. The front parking light is next to the headlight bulb.

2. To access the parking light bulb:

   Use a wrench to loosen the bolt on the battery hold-down. Remove the seven holding clips from the cover by using a flat-tipped screwdriver. Then pull the radiator support cover away.

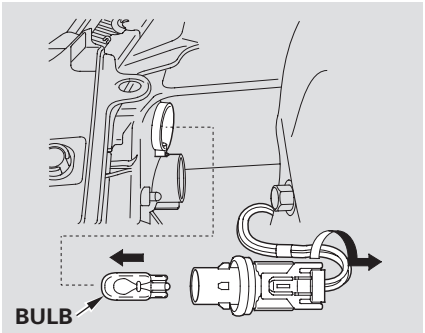

3. Remove the socket from the headlight assembly by turning it one-quarter turn counterclockwise.

4. Pull the burned out bulb straight out of its socket. Push the new bulb straight into the socket until it bottoms.

5. Insert the socket back into the headlight assembly. Turn it clockwise to lock it in place.

6. Turn on the parking lights and check that the new bulb is working.

7. Reinstall the radiator support cover. Lock the holding clips by pushing on the center of each clip. Tighten the bolt on the battery hold-down.

Lights

Replacing Rear Bulbs

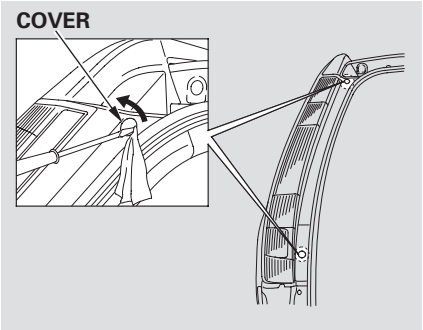

1. Open the tailgate. Place a cloth on the edge of the cover. Remove the covers by carefully prying on the edge with a small flat-tipped screwdriver.

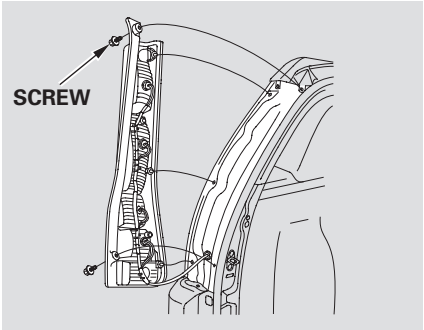

2. Use a Phillips-head screwdriver to remove the taillight assembly mounting screw under each cover.

3. Pull the taillight assembly out of the rear pillar.

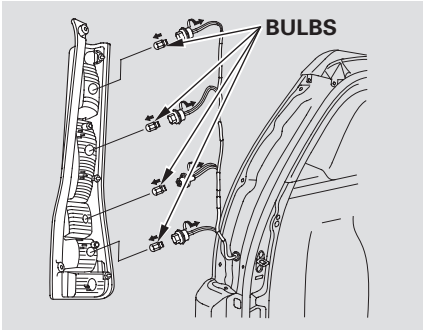

4. Determine which of the four bulbs is burned out: stop/taillight, back-up light, turn signal, or side marker.

5. Remove the socket by turning it one-quarter turn counterclockwise.

6. Pull the burned out bulb straight out of its socket. Push the new bulb straight into the socket until it bottoms.

7. Reinstall the socket into the light assembly by turning it clockwise until it locks.

8. Test the lights to make sure the new bulb is working.

9. Align the clips on the taillight assembly with the holes in the body, then push the taillight assembly into place. Tighten the two mounting screws securely and reinstall the covers.

Replacing a Rear License Plate Bulb

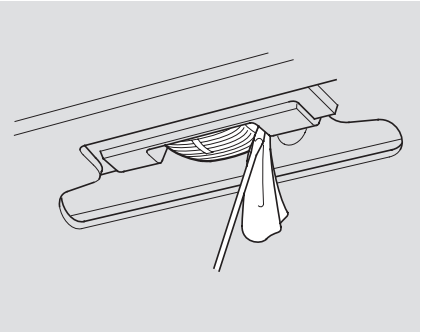

1. Place a cloth and insert a small flat-tipped screwdriver between the right edge of the lens and the housing. The lens will come down.

2. Pull the bulb straight out of its socket. Push the new bulb in until it bottoms in the socket.

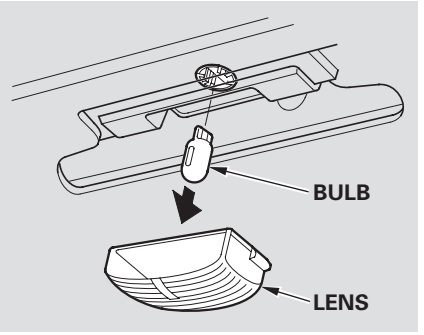

3. Turn on the parking lights and check that the new bulb is working.

4. Put the lens back into the light assembly, left side first. Push on the right edge until it snaps into place.

Replacing a High-mount Brake Light Bulb

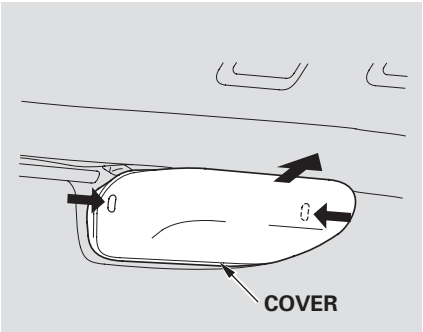

1. Open the tailgate. Remove the light assembly cover by pushing in on the tabs on both sides and pulling the cover off.

2. Remove the socket from the light assembly by turning it one-quarter turn counterclockwise.

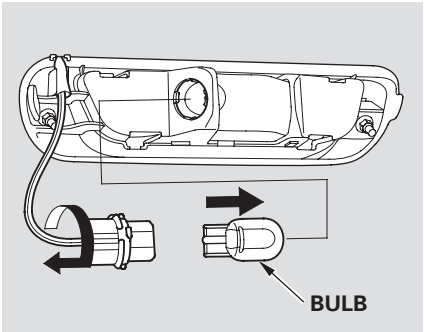

3. Pull the burned out bulb straight out of its socket. Push the new bulb straight into the socket until it bottoms.

4. Test the lights to make sure the new bulb is working.

5. Put the socket back into the light assembly and turn it clockwise to lock it in place.

6. Put the cover back onto the light assembly. Push it on until it locks in place.

Replacing Interior Light Bulbs

Although the ceiling light, cargo area light and spotlights come apart the same way, they do not use the same type of bulbs.

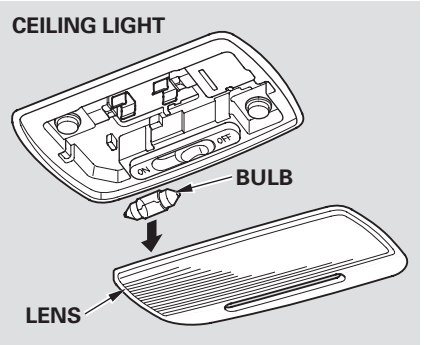

1. Remove the lens by carefully prying on the edge of the lens with a fingernail file or a small flat-tip screwdriver. Do not pry on the edge of the housing around the lens.

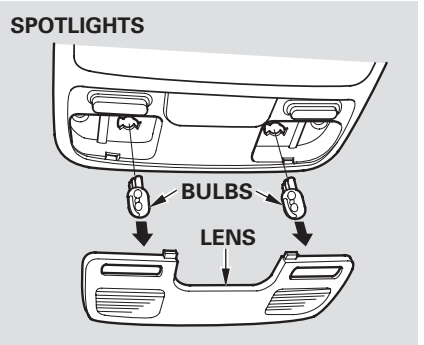

Ceiling light:
Pry on the rear edge of the lens near both sides.

Spotlights:
Pry on the front edge in front of both spotlights.

Cargo area light:
Pry on the front edge to the lens near both sides.

CONTINUED

Lights

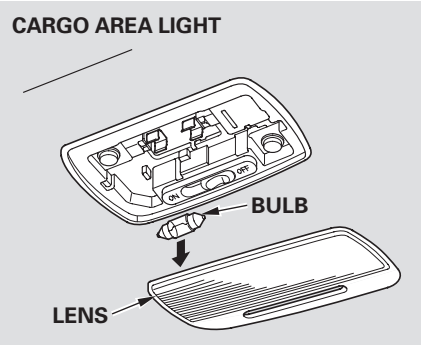

2. Remove the bulb by pulling it straight out of its metal tabs.

3. Push the new bulb into the metal tabs. Snap the lens back in place.

Storing Your Vehicle

If you need to park your vehicle for an extended period (more than one month), there are several things you should do to prepare it for storage. Proper preparation helps prevent deterioration and makes it easier to get your vehicle back on the road. If possible, store your vehicle indoors.

- Fill the fuel tank.
- Change the engine oil and filter (see page 249).
- Wash and dry the exterior completely.
- Clean the interior. Make sure the carpeting, floor mats, etc. are completely dry.
- Leave the parking brake off. Put the transmission in Reverse (5-speed manual) or Park (automatic).
- Block the rear wheels.
- If the vehicle is to be stored for a longer period, it should be supported on jackstands so the tires are off the ground.
- Leave one window open slightly (if the vehicle is being stored indoors).
- Disconnect the battery.
- Support the front and rear wiper blade arms with a folded towel or rag so they do not touch the windshield.
- To minimize sticking, apply a silicone spray lubricant to all door and tailgate seals. Also, apply a vehicle body wax to the painted surfaces that mate with the door and tailgate seals.
- Cover the vehicle with a “breathable” cover, one made from a porous material such as cotton. Nonporous materials, such as plastic sheeting, trap moisture, which can damage the paint.
- If possible, run the engine for a while periodically (preferably once a month).

If you store your vehicle for 12 months or longer, have your Honda dealer perform the inspections called for in the 24 months maintenance schedule (Normal Conditions) as soon as you take it out of storage (see page 238). The replacements called for in the maintenance schedule are not needed unless the vehicle has actually reached that time or mileage.

Appearance Care

Regular cleaning and polishing of your Honda helps to keep it “new” looking. This section gives you hints on how to clean your vehicle and preserve its appearance: the paint, brightwork, wheels and interior. Also included are several things you can do to help prevent corrosion.

Exterior Care 298
- Washing 298
- Waxing 299
- Aluminum Wheels 299
- Paint Touch-up 300

Interior Care 301
- Carpeting 301
- Floor Mats 301
- Fabric 302
- Vinyl 302
- Leather 302
- Seat Belts 302
- Windows 303
- Air Fresheners 303

Corrosion Protection 304

Body Repairs 305

Exterior Care

Washing

Frequent washing helps preserve your vehicle's beauty. Dirt and grit can scratch the paint, while tree sap and bird droppings can permanently ruin the finish.

Wash your vehicle in a shady area, not in direct sunlight. If the vehicle is parked in the sun, move it into the shade and let the exterior cool down before you start.

Only use the solvents and cleaners recommended in this Owner's Manual.

NOTICE

Chemical solvents and strong cleaners can damage the paint, metal, and plastic on your vehicle.

- Rinse the vehicle thoroughly with cool water to remove loose dirt.
- Fill a bucket with cool water. Mix in a mild detergent, such as dishwashing liquid or a product made especially for car washing.
- Wash the vehicle using the water and detergent solution and a soft-bristle brush, sponge, or soft cloth. Start at the top and work your way down. Rinse frequently.
- Check the body for road tar, tree sap, etc. Remove these stains with tar remover or turpentine. Rinse it off immediately so it does not harm the finish. Remember to re-wax these areas, even if the rest of the vehicle does not need waxing.
- When you have washed and rinsed the whole exterior, dry it with a chamois or soft towel. Letting it air-dry will cause dulling and water spots.

As you dry the vehicle, inspect it for chips and scratches that could allow corrosion to start. Repair them with touch-up paint (see page 300).

NOTICE

Your vehicle is equipped with the manual antenna on the front fender. If you use a ''drive-through'' vehicle wash, make sure you remove the antenna first by unscrewing it by hand. This prevents the antenna from being damaged by the brushes.

Waxing
Always wash and dry the whole vehicle before waxing it. You should wax your vehicle, including the metal trim, whenever water sits on the surface in large patches. It should form into beads or droplets after waxing.

You should use a quality liquid or paste wax. Apply it according to the instructions on the container. In general, there are two types of products:

Waxes — A wax coats the finish and protects it from damage by exposure to sunlight, air pollution, etc. You should use a wax on your Honda when it is new.

Polishes — Polishes and cleaner/waxes can restore the shine to paint that has oxidized and lost some of its shine. They normally contain mild abrasives and solvents that remove the top layer of the finish. You should use a polish on your Honda if the finish does not have its original shine after using a wax.

Cleaning tar, insects, etc. with removers also takes off the wax. Remember to re-wax those areas, even if the rest of the vehicle does not need waxing.

Aluminum Wheels
On some models
Clean your Honda's aluminum alloy wheels as you do the rest of the exterior. Wash them with the same solution, and rinse them thoroughly.

The wheels have a protective clear-coat that keeps the aluminum from corroding and tarnishing. Using harsh chemicals, including some commercial wheel cleaners, or stiff brushes can damage this clear-coat. Only use a mild detergent and soft brush or sponge to clean the wheels.

Exterior Care

Paint Touch-up
Your dealer has touch-up paint to match your vehicle's color. The color code is printed on a sticker on the driver's doorjamb. Take this code to your dealer so you are sure to get the correct color.

Inspect your vehicle frequently for chips or scratches in the paint. Repair them right away to prevent corrosion of the metal underneath. Use the touch-up paint only on small chips and scratches. More extensive paint damage should be repaired by a professional.

Carpeting

Vacuum the carpeting frequently to remove dirt. Ground-in dirt will make the carpet wear out faster. Periodically shampoo the carpet to keep it looking new. Use one of the foam-type carpet cleaners on the market. Follow the instructions that come with the cleaner, applying it with a sponge or soft brush. Keep the carpeting as dry as possible by not adding water to the foam.

Floor Mats

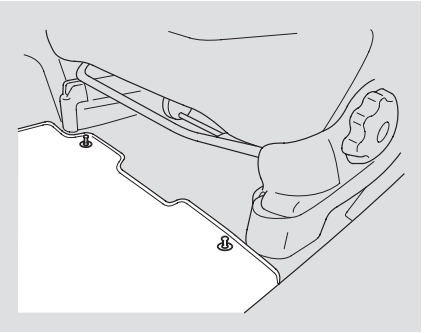

The Honda driver's floor mat that came with your vehicle was designed to be hooked over the floor mat anchor. This keeps the floor mat from sliding forward and possibly interfering with the pedals.

If you remove the floor mat, make sure to re-anchor it when you put it back in your vehicle.

If you replace it, use a genuine Honda floor mat that is designed to be used with the floor mat anchor in your vehicle.

If you use a non-Honda floor mat in the driver's footwell, make sure it fits properly and that it can be used with the floor mat anchor.

Do not put additional floor mats on top of the anchored mat, otherwise the additional mats may slide forward and interfere with the pedals.

Interior Care

Fabric

Vacuum dirt and dust out of the material frequently. For general cleaning, use a solution of mild soap and lukewarm water, letting it air dry. To clean off stubborn spots, use a commercially-available fabric cleaner. Test it on a hidden area of the fabric first, to make sure it does not bleach or stain the fabric. Follow the instructions that come with the cleaner.

Vinyl

Remove dirt and dust with a vacuum cleaner. Wipe the vinyl with a soft cloth dampened in a solution of mild soap and water. Use the same solution with a soft-bristle brush on more difficult spots. You can also use commercially-available spray or foam-type vinyl cleaners.

Leather

On EX-L model in Canada

Vacuum dirt and dust from the leather frequently. Pay particular attention to the pleats and seams. Clean the leather with a soft cloth dampened with clear water, then buff it with a clean, dry cloth. If further cleaning is needed, use a soap specifically for leather, such as saddle soap. Apply this soap with a damp, soft cloth. Wipe down and buff as described above.

Seat Belts

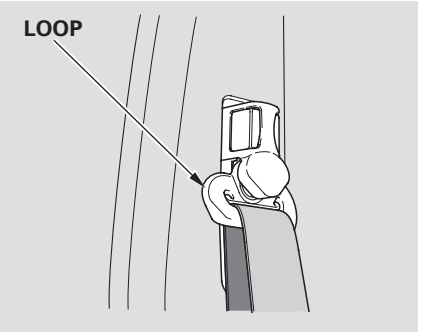

If your seat belts get dirty, you can use a soft brush with a mixture of mild soap and warm water to clean them. Do not use bleach, dye, or cleaning solvents. They can weaken the belt material. Let the belts air-dry before you use the vehicle.

Dirt build-up in the loops of the seat belt anchors can cause the belts to retract slowly. Wipe the insides of the loops with a clean cloth dampened in mild soap and warm water or isopropyl alcohol.

Windows

Clean the windows, inside and out, with a commercially-available glass cleaner. You can also use a mixture of one part white vinegar to ten parts water. This will remove the haze that builds up on the inside of the windows. Use a soft cloth or paper towels to clean all glass and clear plastic surfaces.

NOTICE

The rear window defogger wires are bonded to the inside of the glass. Wiping vigorously up-and-down can dislodge and break the defogger wires. When cleaning the rear window, use gentle pressure and wipe side-to-side.

Air Fresheners

If you want to use an air freshener/deodorizer in the interior of your vehicle, it is best to use a solid type. Some liquid air fresheners contain chemicals that may cause parts of the interior trim and fabric to crack or discolor.

If you use a liquid air freshener, make sure you fasten it securely so it does not spill as you drive.

Corrosion Protection

Two factors normally contribute to causing corrosion in your vehicle:

1. Moisture trapped in body cavities. Dirt and road salt that collects in hollows on the underside of the vehicle stays damp, promoting corrosion in that area.

2. Removal of paint and protective coatings from the exterior and underside of the vehicle.

Many corrosion-preventive measures are built into your Honda. You can help keep your vehicle from corroding by performing some simple periodic maintenance:

- Repair chips and scratches in the paint as soon as you discover them.

- Inspect and clean out the drain holes in the bottom of the doors and body.

- Check the floor coverings for dampness. Carpeting and floor mats may remain damp for a long time, especially in winter. This dampness can eventually cause the floor panels to corrode.

- Use a high-pressure spray to clean the underside of your vehicle. This is especially important in areas that use road salt in winter. It is also a good idea in humid climates and areas subject to salt air. Vehicles equipped with ABS have a sensor and wiring at each wheel. Be careful not to damage them.

- Have the corrosion-preventive coatings on the underside of your vehicle inspected and repaired periodically.

Body Repairs

Body repairs can affect your vehicle's resistance to corrosion. If your vehicle needs repairs after a collision, pay close attention to the parts used in the repair and the quality of the work.

Make sure the repair facility uses genuine Honda replacement body parts. Some companies make sheet metal pieces that seem to duplicate the original Honda body parts, but are actually inferior in fit, finish, and corrosion resistance. Once installed, they do not give the same high-quality appearance.

When reporting your collision to the insurance company, tell them you want genuine Honda parts used in the repair. Although most insurers recognize the quality of original parts, some may try to specify that the repairs be done with other available parts. You should investigate this before any repairs have begun.

Take your vehicle to your authorized Honda dealer for inspection after the repairs are completed. Your dealer can make sure that quality materials were used, and that corrosion-preventive coatings were applied to all repaired and replaced parts.

Taking Care of the Unexpected

This section covers the more-common problems that motorists experience with their vehicles. It gives you information about how to safely evaluate the problem and what to do to correct it. If the problem has stranded you on the side of the road, you may be able to get going again. If not, you will also find instructions on getting your vehicle towed.

Changing a Flat Tire 308
If Your Engine Won't Start..... 318
Nothing Happens or the Starter Motor Operates Very Slowly 318
The Starter Operates Normally 319
Jump Starting 320
If Your Engine Overheats..... 323
Low Oil Pressure Indicator 325
Charging System Indicator..... 326
Malfunction Indicator Lamp 327
Readiness Codes..... 328
Brake System Indicator 329
Closing the Moonroof 330
Fuses 331
Checking and Replacing 332
Emergency Towing 337

Changing a Flat Tire

If you have a flat tire while driving, stop in a safe place to change it. Stopping in traffic or on the shoulder of a busy road is dangerous. Drive slowly along the shoulder until you get to an exit or an area to stop that is far away from the traffic lanes.

⚠ WARNING

The vehicle can easily roll off the jack, seriously injuring anyone underneath.

Follow the directions for changing a tire exactly, and never get under the vehicle when it is supported only by the jack.

1. Park the vehicle on firm, level and non-slippery ground away from traffic. Put the transmission in Park (automatic) or Reverse (manual). Apply the parking brake. If you are towing a trailer, unhitch the trailer.

2. Turn on the hazard warning lights, and turn the ignition switch to LOCK (0). Have all the passengers get out of the vehicle while you change the tire.

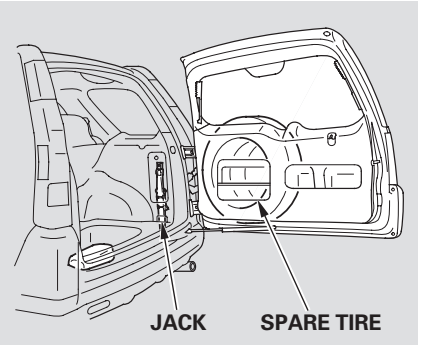

3. Open the tailgate.

Changing a Flat Tire

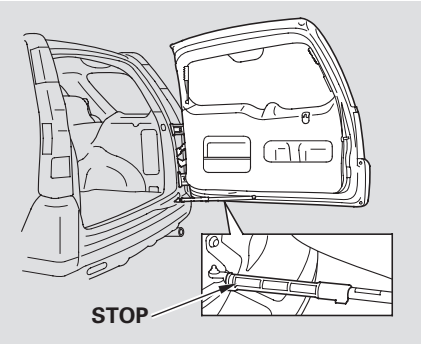

4. To keep the tailgate door open, use the stop from the tool kit. Put the stop on the support strut as shown.

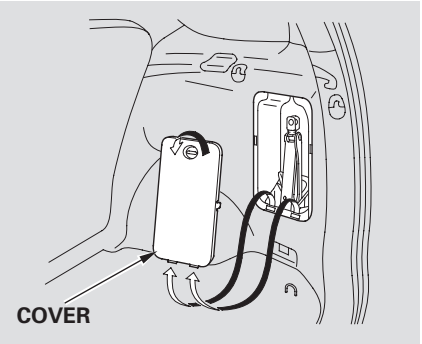

5. The tool and jack are behind a cover in the cargo area on the passenger's side. Remove the cover by turning the handle counterclockwise, then pulling out the cover.

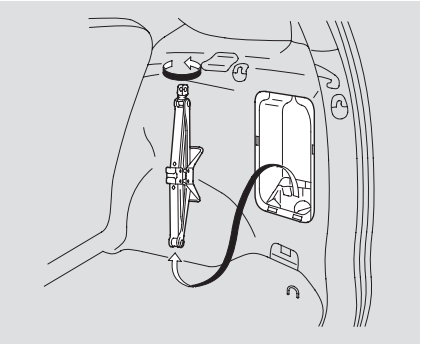

6. Turn the jack's end bracket counterclockwise to loosen it, then remove the jack.

CONTINUED

Changing a Flat Tire

7. Remove the spare tire cover. Do not forcibly pull off the cover or you may damage it.

   On LX and EX models in the U.S. and Canada
   Your vehicle is equipped with a soft vinyl spare tire cover. The following shows you how to remove the cover.

   On EX-L model in Canada
   Your vehicle is equipped with a hard plastic spare tire cover. See page 311 for how to remove the cover.

Soft vinyl spare tire cover
On LX and EX models in the U.S. and Canada

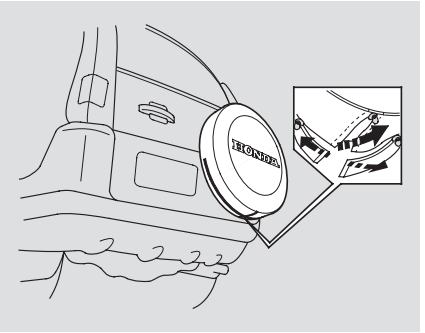

8. Zip open the cover.

9. Pull out the cover's two lower flaps. Don't pull the top of the cover, or you will tear it.

10. Pull the upper flaps out by gradually working your hands up the sides of the cover.

11. Remove the cover.

Hard plastic spare tire cover
On EX-L model in Canada

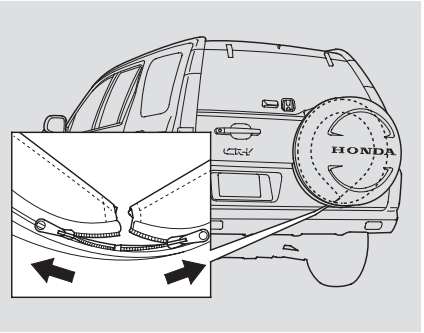

12. Unzip the flap around the lower edge of the cover.

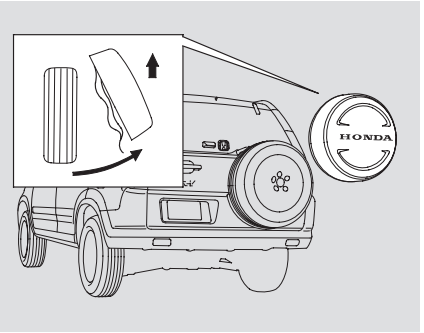

13. Pull out the bottom of the cover, then gradually pull it off.

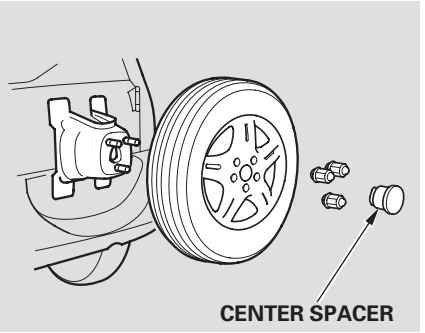

14. Pull off the center spacer. Using the wheel wrench, loosen the three wheel nuts and remove them. Remove the spare tire from the holder.

CONTINUED

Changing a Flat Tire

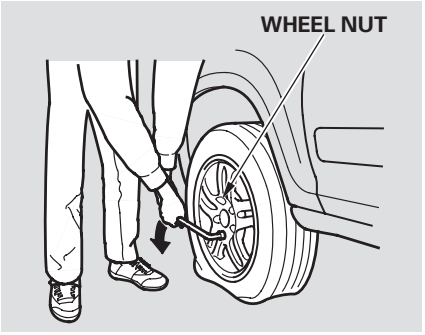

15. Loosen the five wheel nuts 1/2 turn with the wheel wrench.

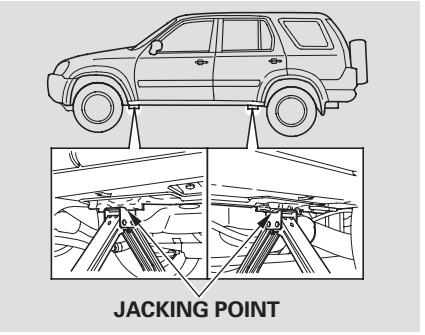

16. Locate the jacking point nearest the tire you need to change. It is pointed to by an arrow molded into the underside of the body. Place the jack under the jacking point. Turn the end bracket clockwise until the top of the jack contacts the jacking point. Make sure the center of the jacking point tab is resting in the jack notch.

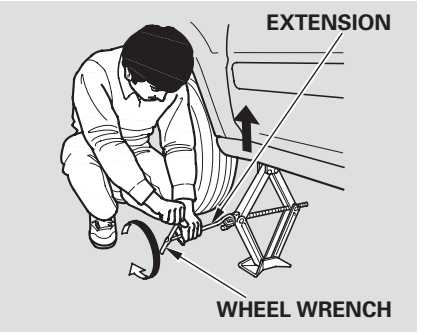

17. Use the extension and wheel wrench as shown to raise the vehicle until the flat tire is off the ground.

18. Remove the wheel nuts, then remove the flat tire. Temporarily place the flat tire on the ground with the outside surface of the wheel facing up. You could scratch the wheel if you put it face down.

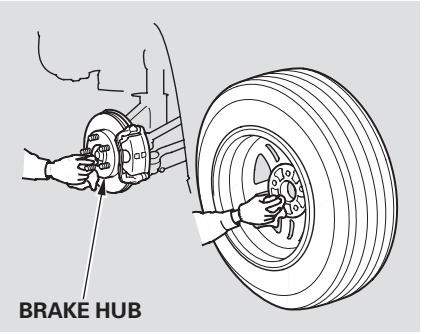

19. Before mounting the spare tire, wipe any dirt off the mounting surface of the wheel and hub with a clean cloth. Wipe the hub carefully, it may be hot from driving.

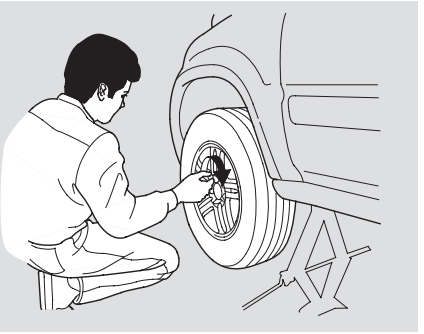

20. Put on the spare tire. Put the wheel nuts back on finger-tight, then tighten them in a crisscross pattern with the wheel wrench until the wheel is firmly against the hub. Do not try to tighten them fully.

CONTINUED

Changing a Flat Tire

21. Lower the vehicle to the ground and remove the jack.

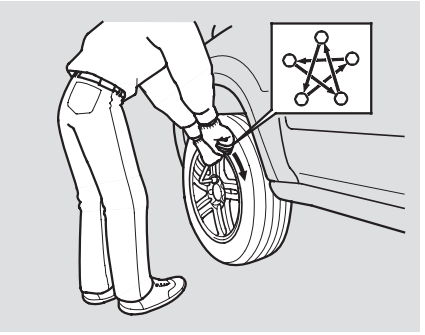

22. Tighten the wheel nuts securely in the same crisscross pattern. Have the wheel nut torque checked at the nearest automotive service facility.
    Tighten the wheel nuts to:
    80 lbf·ft (108 N·m , 11 kgf·m)

23. Remove the center cap from the flat tire.

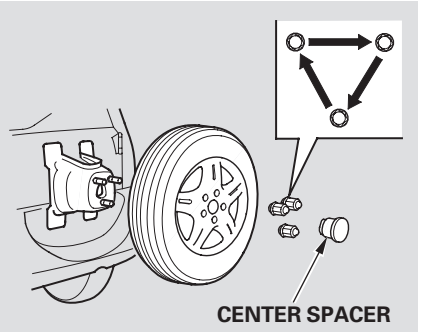

24. Put the flat tire on the spare tire holder. Put the wheel nuts on finger-tight, then tighten them with the wheel wrench. Put the center spacer in the center of the wheel.

25. Store the jack in its holder. Turn the jack's end bracket to lock it in place. Install the cover on the side of the cargo area.

⚠ WARNING

Loose items can fly around the interior in a crash and could seriously injure the occupants.

Store the wheel, jack, and tools securely before driving.

26. Store the tool kit in the storage bin under the cargo area floor.

27. Close the tailgate.

28. Install the spare tire cover.

Soft vinyl spare tire cover
On LX and EX models in the U.S. and Canada

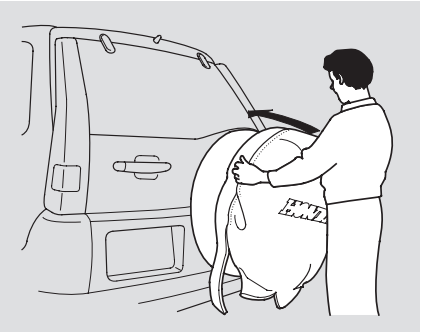

29. Hold the cover at the 10 o'clock and 2 o'clock positions, then place the top of it over the spare tire.

NOTICE

Make sure the cover is at room temperature before you install it. If it's too cold, it won't fit easily over the tire.

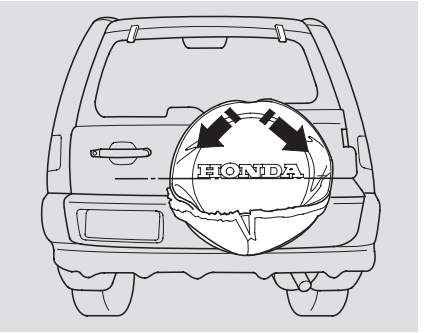

30. Step back to check the alignment of the logo. If needed, pivot the cover until the logo is straight.

CONTINUED

Changing a Flat Tire

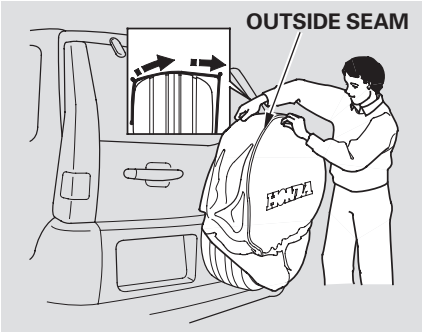

31. Starting at the top of the tire, position the outside seam of the cover slightly over the outside edge of the tire. Pull the cover on, a little at a time, and alternate side to side along the tire until you reach the bottom.

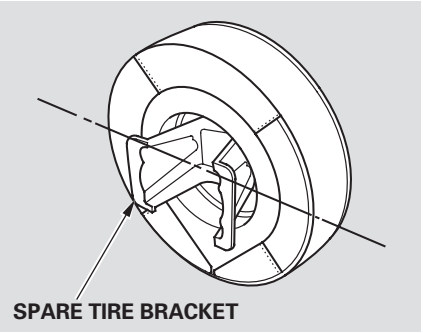

32. Pull the bottom of the cover over the tire.

33. If needed, readjust the cover to smooth out any wrinkles.

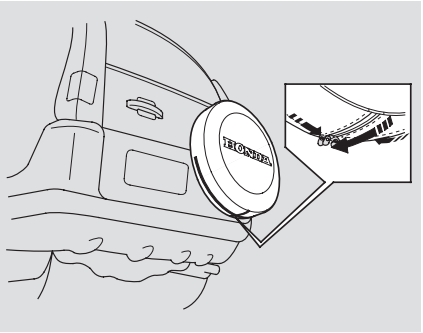

34. Zip the cover closed.

Hard plastic spare tire cover
On EX-L model in Canada

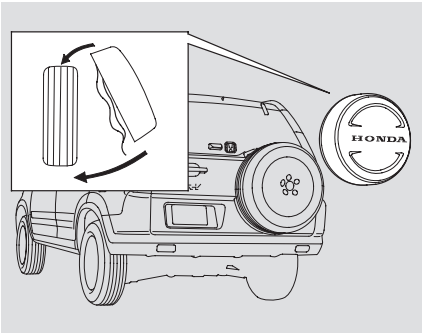

35. Place the top of the cover over the spare tire, then gradually push the bottom of the cover over the bottom of the tire.

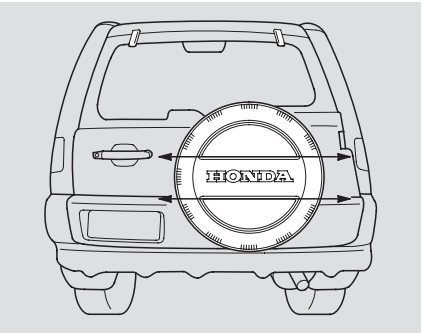

36. Make sure the cover is horizontal. If needed, pivot the cover until the cover is horizontal.

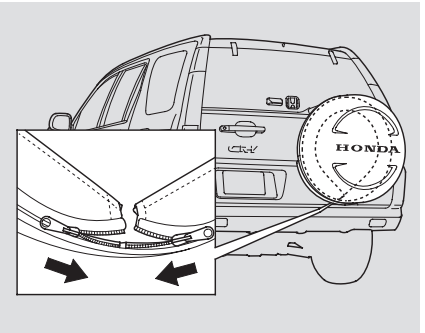

37. Zip the cover closed.

If Your Engine Won't Start

Diagnosing why your engine won't start falls into two areas, depending on what you hear when you turn the key to START (III):

- You hear nothing, or almost nothing. The engine's starter motor does not operate at all, or operates very slowly.
- You can hear the starter motor operating normally, or the starter motor sounds like it is spinning faster than normal, but the engine does not start up and run.

Nothing Happens or the Starter Motor Operates Very Slowly

When you turn the ignition switch to START (III), you do not hear the normal noise of the engine trying to start. You may hear a clicking sound or series of clicks, or nothing at all. Check these things:

- Check the transmission interlock. If you have a manual transmission, the clutch pedal must be pushed all the way to the floor or the starter will not operate. With an automatic transmission, it must be in Park or Neutral.
- Turn the ignition switch to ON (II). Turn on the headlights and check their brightness. If the headlights are very dim or don't light at all, the battery is discharged. See **Jump Starting** on page 320 .
- Turn the ignition switch to START (III). If the headlights do not dim, check the condition of the fuses. If the fuses are OK, there is probably something wrong with the electrical circuit for the ignition switch or starter motor. You will need a qualified technician to determine the problem. (See **Emergency Towing** on page 337 .)

If Your Engine Won't Start

If the headlights dim noticeably or go out when you try to start the engine, either the battery is discharged or the connections are corroded. Check the condition of the battery and terminal connections (see page 269). You can then try jump starting the vehicle from a booster battery (see page 320).

The Starter Operates Normally
In this case, the starter motor's speed sounds normal, or even faster than normal, when you turn the ignition switch to START (III), but the engine does not run.

- Your vehicle has the Immobilizer System. You should use a properly-coded master or valet key to start the engine (see page 85). A key that is not properly coded will cause the immobilizer system indicator in the dash panel to blink rapidly.

- Are you using the proper starting procedure? Refer to **Starting the Engine** on page 200 .

- Do you have fuel? Turn the ignition switch to ON (II) for a minute and watch the fuel gauge. The low fuel level warning light may not be working, so you were not reminded to fill the tank.

- There may be an electrical problem, such as no power to the fuel pump. Check all the fuses (see page 331).

If you find nothing wrong, you will need a qualified technician to find the problem. See **Emergency Towing** on page 337 .

Jump Starting

If your vehicle's battery has run down, you may be able to start the engine by using a booster battery. Although this seems like a simple procedure, you should take several precautions.

⚠ WARNING

A battery can explode if you do not follow the correct procedure, seriously injuring anyone nearby.

Keep all sparks, open flames, and smoking materials away from the battery.

You cannot start a Honda with an automatic transmission by pushing or pulling it.

To jump start your vehicle, follow these directions closely:

1. Open the hood and check the physical condition of the battery (see page 269). In very cold weather, check the condition of the electrolyte. If it seems slushy or like ice, do not try jump starting until it thaws.

NOTICE

If a battery sits in extreme cold, the electrolyte inside can freeze. Attempting to jump start with a frozen battery can cause it to rupture.

2. Turn off all the electrical accessories: heater, A/C, stereo system, lights, etc.

   Put the transmission in Neutral or Park, and set the parking brake.

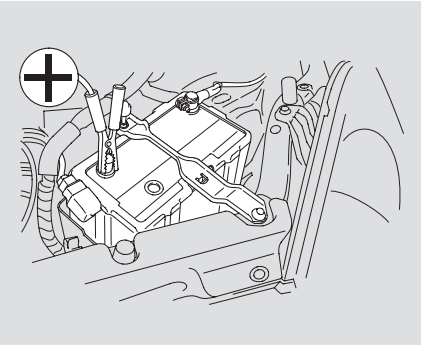

3. Connect one jumper cable to the positive (+) terminal on your Honda's battery. Connect the other end to the positive (+) terminal on the booster battery.

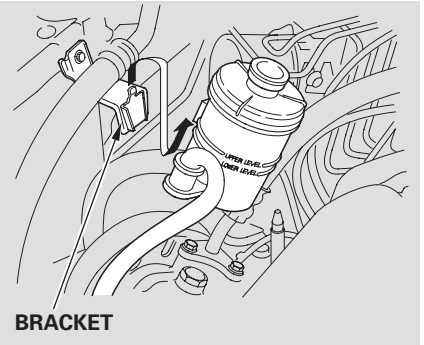

4. Remove the power steering resevoir from the bracket. Pull it away from the grounding strap.

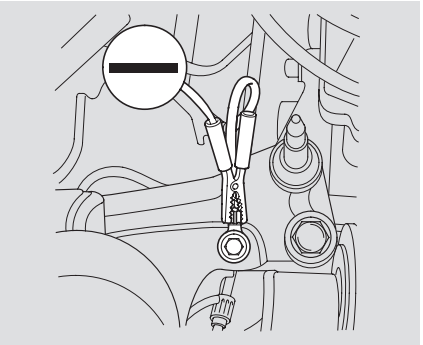

5. Connect the second jumper cable to the negative (−) terminal on the booster battery. Connect the other end to the grounding strap as shown. Do not connect this jumper cable to any other part of the engine.

CONTINUED

Jump Starting

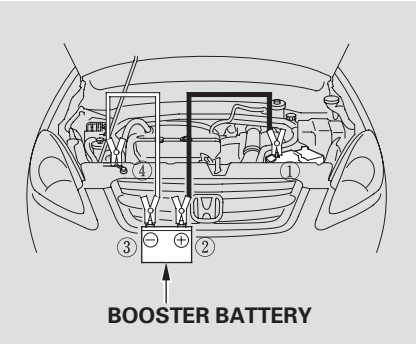

The numbers in the illustration show you the order to connect the jumper cables.

6. If the booster battery is in another vehicle, have an assistant start that vehicle and run it at a fast idle.

7. Start your vehicle. If the starter motor still operates slowly, check the jumper cable connections to make sure they have good metal-to-metal contact.

8. Once your vehicle is running, disconnect the negative cable from your vehicle, then from the booster battery. Disconnect the positive cable from your vehicle, then the booster battery.

Keep the ends of the jumper cables away from each other and any metal on the vehicle until all are disconnected. Otherwise, you may cause an electrical short.

If Your Engine Overheats

The pointer of your vehicle's temperature gauge should stay in the midrange under most conditions. It may go higher if you are driving up a long steep hill on a very hot day. If it climbs to the red mark, you should determine the reason.

NOTICE

Driving with the temperature gauge pointer at the red mark can cause serious damage to your engine.

Your vehicle can overheat for several reasons, such as lack of coolant or a mechanical problem. The only indication may be the temperature gauge climbing to or above the red mark. Or you may see steam or spray coming from under the hood. In either case, you should take immediate action.

⚠ WARNING

Steam and spray from an overheated engine can seriously scald you.

Do not open the hood if steam is coming out.

1. Safely pull to the side of the road. Put the transmission in Neutral or Park, and set the parking brake. Turn off the heating and cooling system and all other accessories. Turn on the hazard warning indicators.

2. If you see steam and/or spray coming from under the hood, turn off the engine.

3. If you do not see steam or spray, leave the engine running and watch the temperature gauge. If the high heat is due to overloading (climbing a long, steep hill on a hot day with the A/C running, for example), the engine should start to cool down almost immediately. If it does, wait until the temperature gauge comes down to the midpoint then continue driving.

4. If the temperature gauge stays at the red mark, turn off the engine.

5. Wait until you see no more signs of steam or spray, then open the hood.

CONTINUED

If Your Engine Overheats

6. Look for any obvious coolant leaks, such as a split radiator hose. Everything is still extremely hot, so use caution. If you find a leak, it must be repaired before you continue driving (see **Emergency Towing** on page 337).

7. If you don't find an obvious leak, check the coolant level in the radiator reserve tank (see page 189). If the level is below the MIN mark, add coolant to halfway between the MIN and MAX marks.

8. If there was no coolant in the reserve tank, you may also have to add coolant to the radiator. Let the engine cool down until the pointer reaches the middle of the temperature gauge, or lower, before checking the radiator.

⚠ WARNING

Removing the radiator cap while the engine is hot can cause the coolant to spray out, seriously scalding you.

Always let the engine and radiator cool down before removing the radiator cap.

9. Using gloves or a large heavy cloth, turn the radiator cap counterclockwise, without pushing down, to the first stop. This releases any remaining pressure in the cooling system. After the pressure releases, push down on the cap and turn it until it comes off.

10. Start the engine and set the temperature control dial to maximum. Add coolant to the radiator up to the base of the filler neck. If you do not have the proper coolant mixture available, you can add plain water. Remember to have the cooling system drained and refilled with the proper mixture as soon as you can.

11. Put the radiator cap back on tightly. Run the engine and watch the temperature gauge. If it goes back to the red mark, the engine needs repair. (See **Emergency Towing** on page 337 .)

12. If the temperature stays normal, check the coolant level in the radiator reserve tank. If it has gone down, add coolant to the MAX mark. Put the cap back on tightly.

Low Oil Pressure Indicator

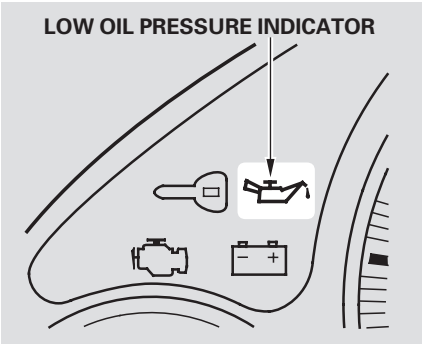

This indicator should light when the ignition switch is ON (II), and go out after the engine starts. It should never come on when the engine is running. If it starts flashing, it indicates that the oil pressure dropped very low for a moment, then recovered. If the indicator stays on with the engine running, it shows that the engine has lost oil pressure and serious engine damage is possible. In either case, you should take immediate action.

NOTICE

Running the engine with low oil pressure can cause serious mechanical damage almost immediately. Turn off the engine as soon as you can safely get the vehicle stopped.

1. Safely pull off the road and shut off the engine. Turn on the hazard warning indicators.

2. Let the vehicle sit for a minute. Open the hood and check the oil level (see page 188). Although oil level and oil pressure are not directly connected, an engine that is very low on oil can lose pressure during cornering and other driving maneuvers.

3. If necessary, add oil to bring the level back to the full mark on the dipstick (see page 247).

4. Start the engine and watch the oil pressure indicator. If the light does not go out within ten seconds, turn off the engine. There is a mechanical problem that needs to be repaired before you can continue driving. (See **Emergency Towing** on page 337.)

Charging System Indicator

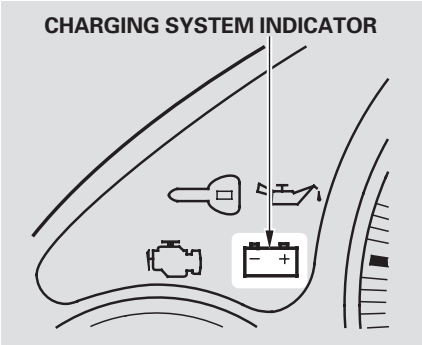

This indicator should come on when the ignition switch is ON (II), and go out after the engine starts. If it comes on brightly when the engine is running, it indicates that the charging system has stopped charging the battery.

Immediately turn off all electrical accessories: radio, heater, A/C, rear defogger, cruise control, etc. Try not to use other electrically-operated controls such as the power windows. Keep the engine running and take extra care not to stall it. Starting the engine will discharge the battery rapidly.

By eliminating as much of the electrical load as possible, you can drive several miles (kilometers) before the battery is too discharged to keep the engine running. Drive to a service station or garage where you can get technical assistance.

Malfunction Indicator Lamp

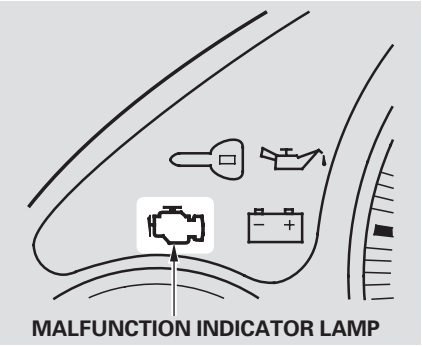

This indicator should light when the ignition switch is ON (II), and go out after the engine starts. If it comes on at any other time, it indicates one of the engine's emissions control systems may have a problem. Even though you may feel no difference in your vehicle's performance, it can reduce your fuel economy and cause your vehicle to put out excessive emissions. Continued operation may cause serious damage.

If you have recently refueled your vehicle, the cause of this indicator coming on could be a loose or missing fuel fill cap. Check the cap and tighten it until it clicks several times. Replace the fuel fill cap if it is missing. Tightening the cap will not make the indicator turn off immediately; it takes one driving trip.

If the indicator remains on past one driving trip, or the fuel cap was not loose or missing, have the vehicle checked by the dealer as soon as possible. Drive moderately until the dealer has inspected the problem. Avoid full-throttle acceleration and driving at high speed.

You should also have the dealer inspect your vehicle if this indicator comes on repeatedly, even though it may turn off as you continue driving.

NOTICE

If you keep driving with the malfunction indicator lamp on, you can damage your vehicle's emissions controls and engine. Those repairs may not be covered by your vehicle's warranties.

This indicator may also come on along with the "D" indicator.

Malfunction Indicator Lamp

Readiness Codes
Your vehicle has certain "readiness codes" that are part of the on-board diagnostics for the emissions systems. In some states, part of the emissions testing is to make sure these codes are set. If they are not set, the test cannot be completed.

If your vehicle's battery has been disconnected or gone dead, these codes are erased. It takes several days of driving under various conditions to set the codes again.

If possible, do not take your vehicle for a state emissions test until the readiness codes are set. To check if they are set, turn the ignition ON (II), but do not start the engine. The Malfunction Indicator Lamp will come on for 20 seconds. If it then goes off, the readiness codes are set. If it blinks 5 times, the readiness codes are not set. Refer to State Emissions Testing for more information.(See page 351 .)

Brake System Indicator

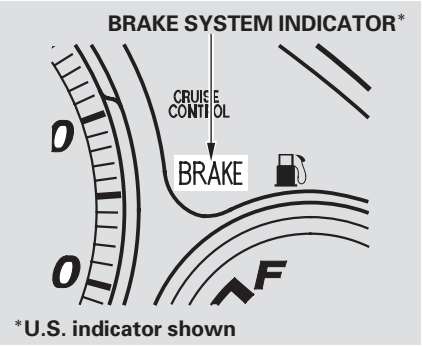

*U.S. indicator shown

The Brake System Indicator normally comes on when you turn the ignition switch ON (II). It is a reminder to check the parking brake. It comes on and stays lit if you do not fully release the parking brake.

If it comes on at any other time, it indicates a problem with the vehicle's brake system. In most cases, the problem is a low fluid level in the brake fluid reservoir. Press lightly on the brake pedal to see if it feels normal. If it does, check the brake fluid level the next time you stop at a service station (see page 263). If the fluid level is low, take the vehicle to your dealer and have the brake system inspected for leaks or worn brake pads.

However, if the brake pedal does not feel normal, you should take immediate action. Because of the brake system's dual-circuit design, a problem in one part of the system will still give you braking at two wheels. You will feel the brake pedal go down much farther before the vehicle begins to slow down, and you will have to press harder on the pedal. The distance needed to stop will be much longer.

Slow down by shifting to a lower gear, and pull to the side of the road when it is safe. Because of the longer distance needed to stop, it is hazardous to drive the vehicle. You should have it towed, and repaired as soon as possible. (See **Emergency Towing** on page 337 .)

If you must drive the vehicle a short distance in this condition, drive slowly and cautiously.

On models equipped with ABS
If the ABS indicator comes on with this indicator, have the vehicle inspected by your Honda dealer immediately.

Closing the Moonroof

If the electric motor will not close the moonroof, do the following:

1. Check the fuse for the moonroof motor (see page 331). If the fuse is blown, replace it with one of the same or lower rating.

2. Try closing the moonroof. If the new fuse blows immediately or the moonroof motor still does not operate, you can close the moonroof manually.

3. Get the moonroof wrench out of the tool kit under the cargo area floor.

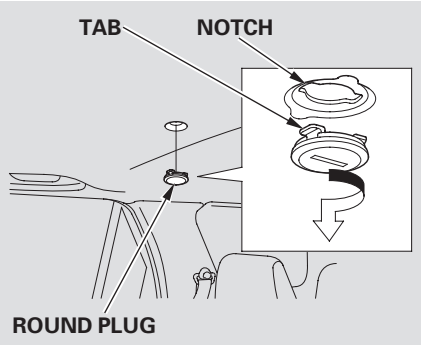

4. To remove the round plug in the center of the headliner, turn the plug by using a screwdriver or coin, then pry it out. Make sure to align the tabs on the round plug to the notches on the ceilling as shown in the illustration.

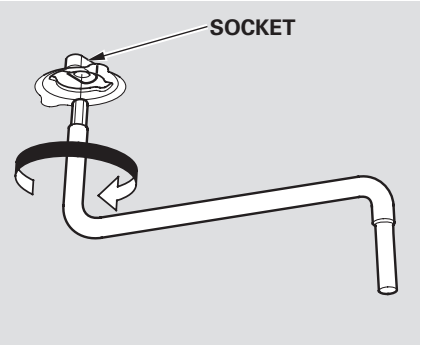

5. Insert the moonroof wrench into the socket behind this plug. Turn the wrench until the moonroof is fully closed.

6. Remove the wrench. Reinstall the round plug.

Fuses

All the electrical circuits in your vehicle have fuses to protect them from a short circuit or overload. These fuses are located in two fuse boxes.

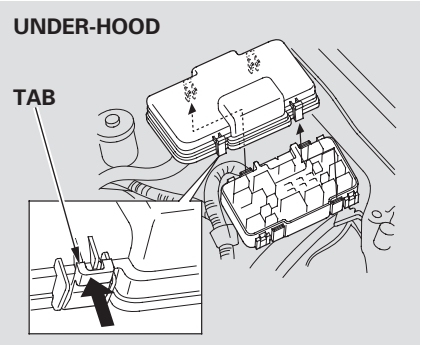

The under-hood fuse box is located in the engine compartment on the driver's side. To open it, push the tabs as shown.

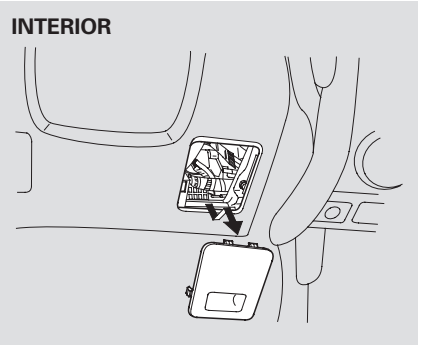

The interior fuse box is underneath the steering column. To remove the fuse box lid, pull it toward you and take the lid out of its hinges.

Fuses

Checking and Replacing Fuses

If something electrical in your vehicle stops working, the first thing you should check for is a blown fuse. Determine from the chart on pages 335 and 336 , or the diagram on the fuse box lid, which fuse or fuses control that component. Check those fuses first, but check all the fuses before deciding that a blown fuse is not the cause. Replace any blown fuses and check the component's operation.

1. Turn the ignition switch to LOCK (0). Make sure the headlights and all other accessories are off.

2. Remove the cover from the fuse box.

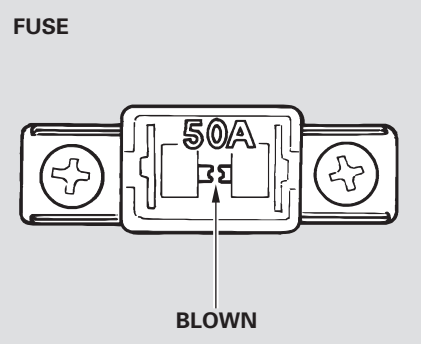

3. Check each of the large fuses in the under-hood fuse box by looking through the top at the wire inside. Removing these fuses requires a Phillips-head screw-driver.

Fuses

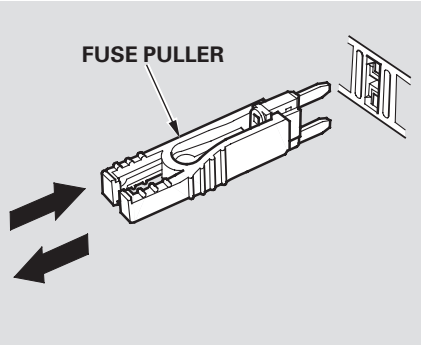

4. Check the smaller fuses in the under-hood fuse box and all the fuses in the interior fuse box by pulling out each fuse with the fuse puller provided in the under-hood fuse box.

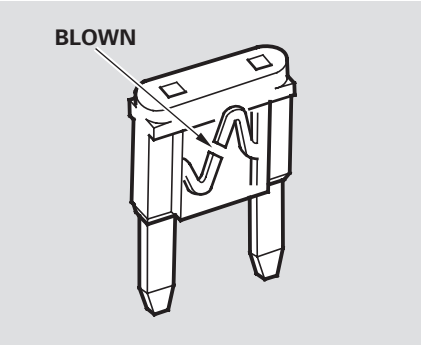

5. Look for a burned wire inside the fuse. If it is burned, replace it with one of the spare fuses of the same rating or lower.

If you cannot drive the vehicle without fixing the problem, and you do not have a spare fuse, take a fuse of the same rating or a lower rating from one of the other circuits. Make sure you can do without that circuit temporarily (such as the accessory power socket or radio).

If you replace the blown fuse with a spare fuse that has a lower rating, it might blow out again. This does not indicate anything wrong. Replace the fuse with one of the correct rating as soon as you can.

CONTINUED

Fuses

NOTICE

Replacing a fuse with one that has a higher rating greatly increases the chances of damaging the electrical system. If you do not have a replacement fuse with the proper rating for the circuit, install one with a lower rating.

6. If the replacement fuse of the same rating blows in a short time, there is probably a serious electrical problem in your vehicle. Leave the blown fuse in that circuit and have your vehicle checked by a qualified mechanic.

INTERIOR FUSE BOX

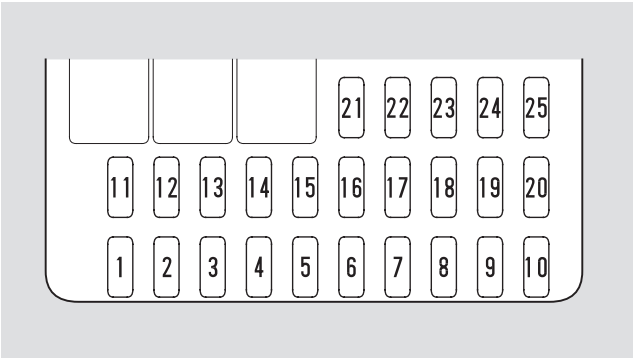

No.	Amps.	Circuits Protected
1	15 A	Ignition Coil
2	10 A	Rear Accessory Power Socket
3	10 A	Daytime running lights*
4	10 A	ACG
5	—	Not Used
6	7.5 A	Power Window Relay
7	20 A	Moonroof
8	7.5 A	Accessory, Radio
9	7.5 A	Rear Wiper
10	7.5 A	Meter
11	—	Not Used
12	7.5 A	Daytime running lights*
13	10 A	SRS
14	10 A	Remote Control Mirrors
15	20 A	LAF Heater
16	20 A	Heated Seat
17	15 A	Fuel Pump
18	15 A	Front Accessory Power Socket
19	7.5 A	Turn Signal Lights
20	20 A	Front Wiper
21	—	Not Used
22	20 A	Front Right Power Window
23	20 A	Front Left Power Window
24	20 A	Rear Left Power Window
25	20 A	Rear Right Power Window

* : On Canadian models

CONTINUED

Fuses

UNDER-HOOD FUSE BOX

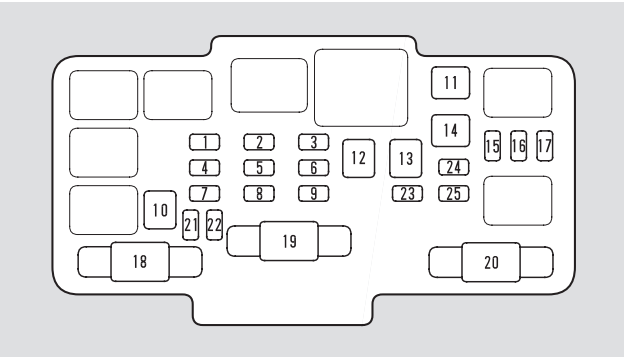

No.	Amps.	Circuits Protected
1	20 A	Condenser Fan
2	15 A	Small Light
3	15 A	Interior Light
4	20 A	Cooling Fan
5	15 A	Hazard
6	15 A	FI ECU
7	15 A	Horn, Stop
8	—	Not Used
9	10 A	Back Up
10	30 A	ABS Motor
11	20 A	Rear Defroster
12	40 A	Heater Motor
13	40 A	Power Window
14	40 A	Option
15	15 A	Left Headlight
16	20 A	Door Lock
17	15 A	Right Headlight
18	30 A	ABS F/S
19	100 A	Battery
20	50 A	Ignition 1
21—25	7.5A—30A	Spare Fuses

Emergency Towing

If your vehicle needs to be towed, call a professional towing service or, if you belong to one, an organization that provides roadside assistance. Never tow your vehicle behind another vehicle with just a rope or chain. It is very dangerous.

There are three popular types of professional towing equipment.

Flat-bed Equipment — The operator loads your vehicle on the back of a truck. **This is the only way to transport your vehicle.** Any other method of towing will damage the drive system. When you contact the towing agency, inform them that a flat-bed is required.

NOTICE

Towing a 4WD CR-V with only two tires on the ground will damage parts of the 4WD system. It should be transported on a flat-bed truck or trailer.

Wheel Lift Equipment — The tow truck uses two pivoting arms that go under the tires (front or rear) and lift them off the ground. The other two tires remain on the ground. **Never tow your vehicle with wheel lift equipment.**

Sling-type Equipment — The tow truck uses metal cables with hooks on the ends. These hooks go around parts of the frame or suspension and cables lift that end of the vehicle off the ground. Your vehicle's suspension and body can be seriously damaged. **This method of towing your CR-V is unacceptable.**

Refer to **Towing Your Vehicle Behind a Motorhome** on page 224 for non-emergency towing information.

Technical Information

The diagrams in this section give you the dimensions and capacities of your Honda, and the locations of the identification numbers. It also includes information you should know about your vehicle's tires and emissions control systems.

Identification Numbers 340
Specifications 342
DOT Tire Quality Grading (U.S. Vehicles) 344
Uniform Tire Quality Grading 344
Treadwear 344
Traction..... 344
Temperature 345
Tire Information 346
Oxygenated Fuels..... 347
Driving in Foreign Countries 348
Emissions Controls..... 349
The Clean Air Act..... 349
Crankcase Emissions Control System..... 349
Evaporative Emissions Control System..... 349
Onboard Refueling Vapor Recovery 349
Exhaust Emissions Controls 350
PGM-FI System 350
Ignition Timing Control System..... 350
Three Way Catalytic Converter..... 350
Replacement Parts..... 350
Three Way Catalytic Converter... 351
State Emissions Testing 352

Identification Numbers

Your vehicle has several identifying numbers located in various places.

The Vehicle Identification Number (VIN) is the 17-digit number your Honda dealer uses to register your vehicle for warranty purposes. It is also necessary for licensing and insuring your vehicle. The easiest place to find the VIN is on a plate fastened to the top of the dashboard. You can see it by looking through the windshield on the driver's side. It is also on the Certification label attached to the driver's doorjamb, and is stamped on the engine compartment bulkhead. The VIN is also provided in bar code on the Certification label.

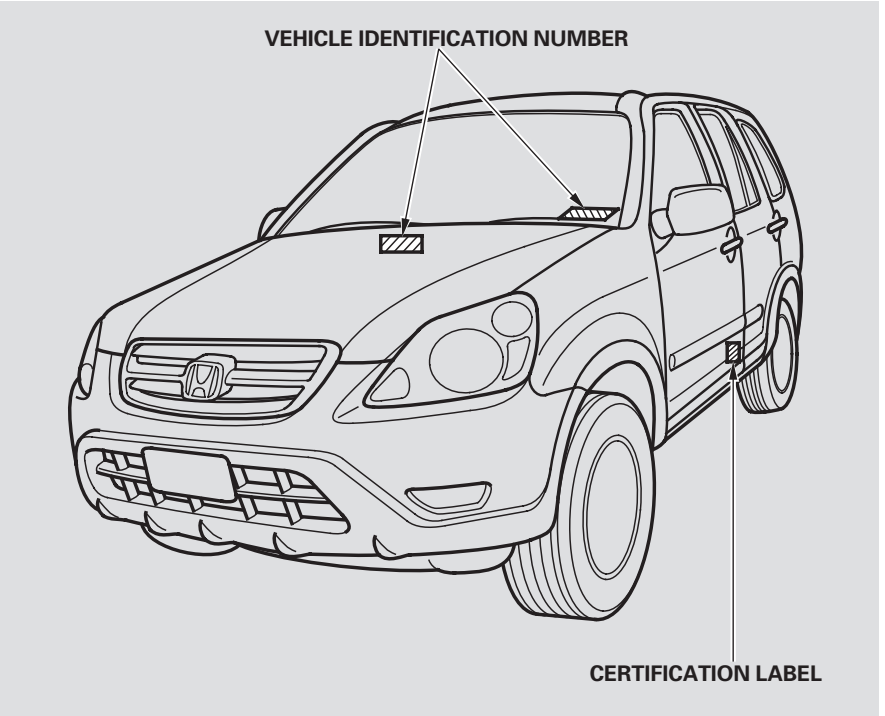

Identification Numbers

The Engine Number is stamped into the engine block.

The Transmission Number is on a label on top of the transmission.

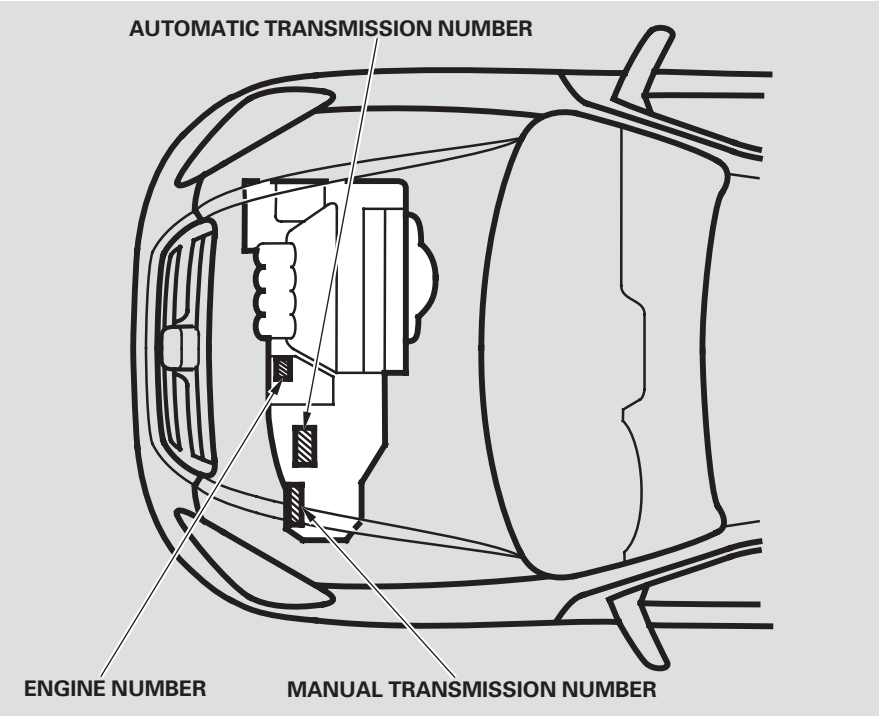

Specifications

Dimensions

Length		178.6 in (4,537 mm)
Width		70.2 in (1,782 mm)
Height		66.2 in (1,682 mm)
Wheelbase		103.1 in (2,620 mm)
Track	Front	60.4 in (1,533 mm)
	Rear	60.6 in (1,538 mm)

Weights

Gross vehicle weight rating	See the certification label attached to the driver's doorjamb.

Engine

Type	Water cooled 4-stroke DOHC VTEC 4-cylinder gasoline engine
Bore x Stroke	3.43 x 3.90 in (87.0 x 99.0 mm)
Displacement	144 cu-in (2,354 cm^3)
Compression ratio	9.6 : 1
Spark plugs	See spark plug maintenance section page 269 .

Capacities

Fuel tank		Approx. 15.3 US gal (58 ℓ)
Engine oil	Change*1	
	Including filter	4.4 US qt (4.2 ℓ)
	Without filter	4.2 US qt (4.0 ℓ)
	Total	5.6 US qt (5.3 ℓ)
Engine coolant	Automatic Transmission	
	Change*2	1.43 US gal (5.4 ℓ)
	Total	1.88 US gal (7.1 ℓ)
	Manual Transmission	
	Change*2	1.45 US gal (5.5 ℓ)
	Total	1.90 US gal (7.2 ℓ)
Automatic transmission fluid	Change	
	4WD	3.3 US qt (3.1 ℓ)
	2WD	3.1 US qt (2.9 ℓ)
	Total	
	4WD	7.6 US qt (7.2 ℓ)
	2WD	6.9 US qt (6.5 ℓ)
Manual transmission fluid	Change	2.0 US qt (1.9 ℓ)
	Total 4WD	2.4 US qt (2.3 ℓ)
	Total 2WD	2.2 US qt (2.1 ℓ)
Rear differential fluid (4WD)	Change	1.1 US qt (1.0 ℓ)
	Total	1.3 US qt (1.2 ℓ)
Windshield washer reservoir	U.S. Vehicles	2.6 US qt (2.5 ℓ)
	Canada Vehicles	4.8 US qt (4.5 ℓ)

*1 : Excluding the oil remaining in the engine.
*2 : Including the coolant in the reserve tank and that remaining in the engine.
Reserve tank capacity:
0.16 US gal (0.6 ℓ)

Specifications

Air Conditioning

Refrigerant type	HFC-134a (R-134a)
Charge quantity	17.0－18.7 oz (480－530 g)
Lubricant type	SP-10

Lights

Headlights	12 V － 60/55 W (H4/HB2)
Front turn signal/side marker lights	12 V － 21/5 W
Parking lights	12 V － 3 CP
Rear turn signal lights	12 V － 21 W
Stop/Taillights	12 V － 21/5 W
Back-up lights	12 V － 21 W
License plate light	12 V － 5 W
Ceiling light	12 V － 8 W
Spotlights	12 V － 4 CP
Cargo area Light	12 V － 8 W
Rear side marker lights	12 V － 3 CP
High-mount brake light	12 V － 21 W

Battery

Capacity	12 V － 36 AH/5 HR 12 V － 45 AH/20 HR

Fuses

Interior	See page 335 or the fuse label attached to the inside of the fuse box door under the steering column.
Under-hood	See page 336 or the fuse box cover.

Alignment

Toe-in	Front	0.0 in (0 mm)
	Rear	0.08 in (2.0 mm)
Camber	Front	0°
	Rear	－1°
Caster	Front	1°45′

Tires

Size	Front/Rear	P205/70R15 95S
Pressure	Front	26 psi (180 kPa , 1.8 kgf/cm²)
	Rear	26 psi (180 kPa , 1.8 kgf/cm²)

DOT Tire Quality Grading (U.S. Vehicles)

The tires on your vehicle meet all U.S. Federal Safety Requirements. All tires are also graded for treadwear, traction, and temperature performance according to Department of Transportation (DOT) standards. The following explains these gradings.

Uniform Tire Quality Grading
Quality grades can be found where applicable on the tire sidewall between the tread shoulder and the maximum section width. For example:

Treadwear 200
Traction AA
Temperature A

All passenger car tires must conform to Federal Safety Requirements in addition to these grades.

Treadwear
The treadwear grade is a comparative rating based on the wear rate of the tire when tested under controlled conditions on a specified government test course. For example, a tire graded 150 would wear one and one-half (1 1/2) times as well on the government course as a tire graded 100. The relative performance of tires depends upon the actual conditions of their use, however, and may depart significantly from the norm due to variations in driving habits, service practices and differences in road characteristics and climate.

Traction – AA, A, B, C
The traction grades, from highest to lowest, are AA, A, B, and C. Those grades represent the tire's ability to stop on wet pavement as measured under controlled conditions on specified government test surfaces of asphalt and concrete. A tire marked C may have poor traction performance.

Warning: The traction grade assigned to this tire is based on straight-ahead braking traction tests, and does not include acceleration, cornering, hydroplaning, or peak traction characteristics.

DOT Tire Quality Grading (U.S. Vehicles)

Temperature — A, B, C
The temperature grades are A (the highest), B, and C, representing the tire's resistance to the generation of heat and its ability to dissipate heat when tested under controlled conditions on a specified indoor laboratory test wheel. Sustained high temperature can cause the material of the tire to degenerate and reduce tire life, and excessive temperature can lead to sudden tire failure. The grade C corresponds to a level of performance which all passenger car tires must meet under the Federal Motor Vehicle Safety Standard No. 109. Grades B and A represent higher levels of performance on the laboratory test wheel than the minimum required by law.

Warning: The temperature grade for this tire is established for a tire that is properly inflated and not overloaded. Excessive speed, underinflation, or excessive loading, either separately or in combination, can cause heat buildup and possible tire failure.

Tire Information

Tire Labeling

The tires that came on your vehicle have a number of markings. Those you should be aware of are described below.

Tire Size

Whenever tires are replaced, they should be replaced with tires of the same size. Following is an example tire size with an explanation of what each component means.

P205/70R15 95S

P — Vehicle type (P indicates passenger vehicle).

205 — Tire width in millimeters.

70 — Aspect ratio (the tire's section height as a percentage of its width).

R — Tire construction code (R indicates radial).

15 — Rim diameter in inches.

95 — Load index (a numerical code associated with the maximum load the tire can carry).

S — Speed symbol (an alphabetical code indicating the maximum speed rating).

Tire Identification Number

Tire Identification Number (TIN) is a group of numbers and letters that look like the following example TIN.

DOT B97R FW6X 2202

DOT — This indicates that the tire meets all requirements of the U.S. Department of Transportation.

B97R — Manufacturer's identification mark.

FW6X — Tire type code.

2202 — Date of manufacture.

Oxygenated Fuels

Some conventional gasolines are being blended with alcohol or an ether compound. These gasolines are collectively referred to as oxygenated fuels. To meet clean air standards, some areas of the United States and Canada use oxygenated fuels to help reduce emissions.

If you use an oxygenated fuel, be sure it is unleaded and meets the minimum octane rating requirement.

Before using an oxygenated fuel, try to confirm the fuel's contents. Some states/provinces require this information to be posted on the pump.

The following are the U.S. EPA and Canadian CGSB approved percentages of oxygenates:

ETHANOL (ethyl or grain alcohol)
You may use gasoline containing up to 10 percent ethanol by volume. Gasoline containing ethanol may be marketed under the name "Gasohol."

MTBE (Methyl Tertiary Butyl Ether)
You may use gasoline containing up to 15 percent MTBE by volume.

METHANOL (methyl or wood alcohol)
Your vehicle was not designed to use fuel that contains methanol. Methanol can corrode metal parts in the fuel system, and also damage plastic and rubber components. This damage would not be covered by your warranties.

If you notice any undesirable operating symptoms, try another service station or switch to another brand of gasoline.

Fuel system damage or performance problems resulting from the use of an oxygenated fuel containing more than the percentages of oxygenates given above are not covered under warranty.

Driving in Foreign Countries

If you are planning to take your Honda outside the U.S. or Canada, contact the tourist bureaus in the areas you will be traveling in to find out about the availability of unleaded gasoline with the proper octane rating.

If unleaded gasoline is not available, be aware that using leaded gasoline in your Honda will affect performance and fuel mileage, and damage its emissions controls. It will no longer comply with U.S. and Canadian emissions regulations, and will be illegal to operate in North America. To bring your vehicle back into compliance will require the replacement of several components, such as the oxygen sensors and the three way catalytic converter. These replacements are not covered under warranty.

Emissions Controls

The burning of gasoline in your vehicle's engine produces several by-products. Some of these are carbon monoxide (CO), oxides of nitrogen (NOx) and hydrocarbons (HC). Gasoline evaporating from the tank also produces hydrocarbons. Controlling the production of NOx, CO, and HC is important to the environment. Under certain conditions of sunlight and climate, NOx and HC react to form photochemical "smog." Carbon monoxide does not contribute to smog creation, but it is a poisonous gas.

The Clean Air Act
The United States Clean Air Act* sets standards for automobile emissions. It also requires that automobile manufacturers explain to owners how their emissions controls work and what to do to maintain them. This section summarizes how the emissions controls work. Scheduled maintenance is on page 238.

* In Canada, Honda vehicles comply with the Canadian Motor Vehicle Safety Standards (CMVSS) for Emissions valid at the time they are manufactured.

Crankcase Emissions Control System
Your vehicle has a Positive Crankcase Ventilation System. This keeps gasses that build up in the engine's crankcase from going into the atmosphere. The Positive Crankcase Ventilation valve routes them from the crankcase back to the intake manifold. They are then drawn into the engine and burned.

Evaporative Emissions Control System
As gasoline evaporates in the fuel tank, an evaporative emissions control canister filled with charcoal adsorbs the vapor. It is stored in this canister while the engine is off. After the engine is started and warmed up, the vapor is drawn into the engine and burned during driving.

Onboard Refueling Vapor Recovery
The Onboard Refueling Vapor Recovery (ORVR) system captures the fuel vapors during refueling. The vapors are adsorbed in a canister filled with activated carbon. While driving, the fuel vapors are drawn into the engine and burned off.

Emissions Controls

Exhaust Emissions Controls

The exhaust emissions controls include three systems: PGM-FI, Ignition Timing Control, and Three Way Catalytic Converter. These three systems work together to control the engine's combustion and minimize the amount of HC, CO, and NOx that comes out the tailpipe. The exhaust emissions control systems are separate from the crankcase and evaporative emissions control systems.

PGM-FI System

The PGM-FI System uses sequential multiport fuel injection.
It has three subsystems: Air Intake, Engine Control, and Fuel Control. The Engine Control Module (ECM) or the Powertrain Control Module (PCM) uses various sensors to determine how much air is going into the engine. It then controls how much fuel to inject under all operating conditions.

Ignition Timing Control System

This system constantly adjusts the ignition timing, reducing the amount of HC, CO, and NOx produced.

Three Way Catalytic Converter

The three way catalytic converter is in the exhaust system. Through chemical reactions, it converts HC, CO, and NOx in the engine's exhaust to carbon dioxide (CO_2), dinitrogen (N_2), and water vapor.

Replacement Parts

The emissions control systems are designed and certified to work together in reducing emissions to levels that comply with the Clean Air Act. To make sure the emissions remain low, you should use only new genuine Honda replacement parts or their equivalent for repairs. Using lower quality parts may increase the emissions from your vehicle.

The emissions control systems are covered by warranties separate from the rest of your vehicle. Read your warranty manual for more information.

Three Way Catalytic Converter

The three way catalytic converter contains precious metals that serve as catalysts, promoting chemical reactions to convert the exhaust gasses without affecting the metals. The catalytic converter is referred to as a three-way catalyst, since it acts on HC, CO, and NOx. A replacement unit must be an original Honda part or its equivalent.

The three way catalytic converter must operate at a high temperature for the chemical reactions to take place. It can set on fire any combustible materials that come near it. Park your vehicle away from high grass, dry leaves, or other flammables.

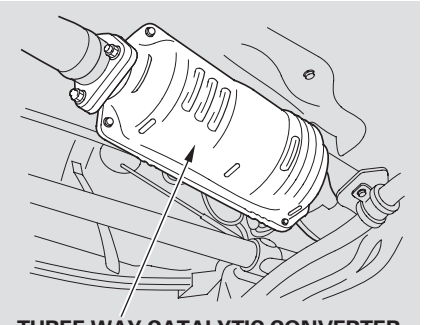

THREE WAY CATALYTIC CONVERTER

A defective three way catalytic converter contributes to air pollution, and can impair your engine's performance. Follow these guidelines to protect your vehicle's three way catalytic converter.

- Always use unleaded gasoline. Even a small amount of leaded gasoline can contaminate the catalyst metals, making the three way catalytic converter ineffective.
- Keep the engine tuned-up.
- Have your vehicle diagnosed and repaired if it is misfiring, backfiring, stalling, or otherwise not running properly.

State Emissions Testing

Testing of Readiness Codes
If you take your vehicle for a state emissions test shortly after the battery has been disconnected or gone dead, it may not pass the test. This is because of certain “readiness codes” that must be set in the on-board diagnostics for the emissions systems. These codes are erased when the battery is disconnected, and set again only after several days of driving under a variety of conditions.

If the testing facility determines that the readiness codes are not set, you will be requested to return at a later date to complete the test. If you must get the vehicle re-tested within the next two or three days, you can condition the vehicle for re-testing by doing the following.

- Make sure the gas tank is nearly, but not completely, full (around 3/4).
- Make sure the vehicle has been parked with the engine off for 8 hours or more.
- Make sure the ambient temperature is between 20° and 95°F.
- Without touching the accelerator pedal, start the engine and let it idle for 20 seconds.
- Keep the vehicle in Park (automatic transmission) or Neutral (manual transmission). Increase the engine speed to 2,000 rpm and hold it there until the temperature gauge rises to at least 1/4 of the scale (approximately 3 minutes).

State Emissions Testing

- Select a nearby lightly traveled major highway where you can maintain a speed of 50 to 60 mph (80 to 97 km/h) for at least 20 minutes. Drive on the highway in D (A/T) or 5th (M/T). Do not use the cruise control. When traffic allows, drive for 90 seconds without moving the accelerator pedal. (Vehicle speed may vary slightly; this is okay.) If you cannot do this for a continuous 90 seconds because of traffic conditions, drive for at least 30 seconds, then repeat it two more times (for a total of 90 seconds).
- Then drive in city/suburban traffic for at least 10 minutes. When traffic conditions allow, let the vehicle coast for several seconds without using the accelerator pedal or the brake pedal.

If the testing facility determines the readiness codes are still not set, see your Honda dealer.

Warranty and Customer Relations

Customer Relations Information 356
Warranty Coverages 357
Reporting Safety Defects (U.S. Vehicles) 358
Authorized Manuals 359

Customer Relations Information

Honda dealership personnel are trained professionals. They should be able to answer all your questions. If you encounter a problem that your dealership does not solve to your satisfaction, please discuss it with the dealership's management. The Service Manager or General Manager can help. Almost all problems are solved in this way.

If you are dissatisfied with the decision made by the dealership's management, contact your Honda Customer Relations Office.

U.S. Owners:
American Honda Motor Co., Inc.
Automobile Customer Service
Mail Stop 500-2N-7A
1919 Torrance Boulevard
Torrance, California 90501-2746

Tel: (800) 999-1009

Canadian Owners:
CUSTOMER RELATIONS
RELATIONS AVEC LA CLIENTÈLE

Honda Canada Inc.
715 Milner Avenue
Toronto, ON
M1B 2K8

Tel: 1-888-9-HONDA-9
Fax: Toll-free 1-877-939-0909
Toronto (416) 287-4776

In Puerto Rico and the U.S. Virgin Islands:
Bella International
P.O. Box 190816
San Juan, Puerto Rico 00919-0816

Tel: (787) 250-4318

When you call or write, please give us this information:

- Vehicle Identification Number (see page 340)
- Name and address of the dealer who services your vehicle
- Date of purchase
- Mileage on your vehicle
- Your name, address, and telephone number
- A detailed description of the problem
- Name of the dealer who sold the vehicle to you

Warranty Coverages

U.S. Owners

Your new Honda is covered by these warranties:

New Vehicle Limited Warranty — covers your new vehicle, except for the battery, emissions control systems and accessories, against defects in materials and workmanship.

Emissions Control Systems Defects Warranty and Emissions Performance Warranty — these two warranties cover your vehicle's emissions control systems. Time, mileage, and coverage are conditional. Please read the warranty manual for exact information.

Original Equipment Battery Limited Warranty — this warranty gives up to 100 percent credit toward a replacement battery.

Seat Belt Limited Warranty — a seat belt that fails to function properly is covered for the useful life of the vehicle.

Rust Perforation Limited Warranty — all exterior body panels are covered for rust-through from the inside for the specified time period with no mileage limit.

Accessory Limited Warranty — genuine Honda Accessories are covered under this warranty. Time and mileage limits depend on the type of accessory and other factors. Please read your warranty manual for details.

Replacement Parts Limited Warranty — covers all genuine Honda replacement parts against defects in materials and workmanship.

Replacement Battery Limited Warranty — provides prorated coverage for a replacement battery purchased from a Honda dealer.

Replacement Muffler Lifetime Limited Warranty — provides coverage for as long as the purchaser of the muffler owns the vehicle.

Restrictions and exclusions apply to all these warranties. Please read the 2003 Honda Warranty Information booklet that came with your vehicle for precise information on warranty coverages. Your Honda's original tires are covered by their manufacturer. Tire warranty information is in a separate booklet.

Canadian Owners

Please refer to the 2003 Warranty Manual that came with your vehicle.

Reporting Safety Defects (U.S. Vehicles)

If you believe that your vehicle has a defect which could cause a crash or could cause injury or death, you should immediately inform the National Highway Traffic Safety Administration (NHTSA) in addition to notifying American Honda Motor Co., Inc.

If NHTSA receives similar complaints, it may open an investigation, and if it finds that a safety defect exists in a group of vehicles, it may order a recall and remedy campaign. However, NHTSA cannot become involved in individual problems between you, your dealer, or American Honda Motor Co., Inc.

To contact NHTSA, you may either call the Auto Safety Hotline toll-free at 1-800-424-9393 (or 366-0123 in Washington D.C. area) or write to: NHTSA, U.S. Department of Transportation, Washington, D.C. 20590. You can also obtain other information about motor vehicle safety from the Hotline.

Purchasing Factory Authorized Manuals (U.S. only)

The publications shown below can be purchased from Helm Incorporated. You can order in any of three ways:

- Detach and mail the order form on the right half of this page
- Call Helm Inc. at 1-800-782-4356 (credit card orders only)
- Go online at *www. helminc. com*

If you are interested in other years or models, contact Helm Inc. at 1-800-782-4356

Publication Form Number	Form Description	Price Each*
61S9A01	2002-03 Honda CR-V Service Manual	$70.00
61S9A01EL	2002-03 Honda CR-V Electrical Troubleshooting Manual	$50.00
61S9A30	2002-03 Honda CR-V Body Repair Manual	$44.00
31S9A610	2003 Honda CR-V Owner's Manual	$34.00
31S9AQ00	2003 Honda CR-V Quick Start Guide	$10.00
HON-R	Order Form for Previous Years- Indicate Year and Model Desired	FREE

* Prices are subject to change without notice and without incurring obligation.

Valid only for sales within the U.S. Canadian owners should contact their authorized Honda dealer.

ORDER TOLL FREE: 1-800-782-4356

(NOTE: For Credit Card Holder Orders Only)

Monday-Friday 8:00 A.M. – 6:00 P.M. EST

MINIMUM CREDIT CARD PURCHASE $10.00

OR

By completing this form you can order the materials desired. You can pay by check or money order, or charge to your credit card. Mail to Helm Incorporated at the address shown on the back of the order form.

2003 HON	PUBLICATION NUMBER	VEHICLE MODEL Name	VEHICLE MODEL Year	Qty	Price Each*	Total Price

TOTAL MATERIAL	
Mich. Purchases Add 6% Sales Tax	
HANDLING CHARGE	$6.00
GRAND TOTAL	

* Prices are subject to change without notice and without incurring obligation.

Orders are mailed within 10 days. Please allow adequate time for delivery.

Authorized Manuals

SHIP TO

NOTE: Dealers and Companies please provide dealer or company name, and also the name of the person to whose attention the shipment should be sent. For purchases outside U.S.A. please write to the address shown below for a quotation.

Customer Name _____ Attention _____

Street Address — No P.O. Box Number _____ Apartment Number _____

City _____ State & Zip Code _____

Daytime Telephone Number ( ) _____

PAYMENT

☐ Check or money order enclosed payable to Helm Inc — U.S. funds only. Do not send cash

☐ Master Card ☐ VISA ☐ Check here if your billing address is different from the shipping address shown above.

Account Number _____ Expiration: Mo. Yr. ___

CUSTOMER SIGNATURE _____ DATE _____

These Publications cannot be returned for credit without receiving advance authorization within 14 days of delivery. On returns, a restocking fee may be applied against the original order.

HELM P.O. BOX 07280·DETROIT, MICHIGAN 48207·1-800-782-4356

Service Manual:
This manual covers maintenance and recommended procedures for repair to engine and chassis components. It is written for the Journeyman mechanic, but is simple enough for most mechanically-inclined owners to understand.

Electrical Troubleshooting Manual:
This manual complements the Service Manual by providing in-depth troubleshooting information for each electrical circuit in your vehicle.

Body Repair Manual:
This manual describes the procedures involved in the replacement of damaged body parts.

Index

A

Accessories and Modifications 191
Accessories 191
Additional Safety Precautions .. 192
Modifications 192
ACCESSORY (Ignition Key Position) 87
Accessory Power Sockets 122
Additives, Engine Oil 248
Airbag (SRS) 10, 54
Air Cleaner Element 265
Air Conditioning System 128
Maintenance 274
Usage 128
Air Outlets (Vents) 130
Air Pressure, Tires 278
High Speed Driving 279
Normal Driving 279
Alcohol in Gasoline 347
Antifreeze 251
Anti-lock Brakes (ABS) Indicator 68, 214
Operation 212
Anti-theft, Audio System 178
Anti-theft Steering Column Lock 87
Appearance Care 297
Audio System 137
Automatic Seat Belt Tensioners 52
Automatic Speed Control 179
Automatic Transmission 204
Capacity, Fluid 342
Checking Fluid Level 260
Shifting 205
Shift Lever Position Indicator .. 204
Shift Lever Positions 205
Shift Lock Release 209

B

Battery
Charging System Indicator 66, 326
Jump Starting 320
Maintenance 269
Specifications 343
Before Driving 183
Belts, Seat 8, 50
Beverage Holders 116
Body Repairs 305
Brakes
Anti-lock System (ABS) 212
Break-in, New Linings 184
Bulb Replacement 290
Fluid 263
Parking 82
System Indicator 66, 329
Wear Indicators 211
Braking System 211
Break-in, New Vehicle 184
Brightness Control, Instruments ... 77
Brights, Headlights 76
Built-in Table 117
Bulb Replacement
Back-up Lights 290
Brake Lights 290
Cargo Area Light 293
Ceiling Light 293
Front Parking Lights 289
Front Side Marker Lights 288
Headlights 287
High-mount Brake Light 292
Interior Lights 293
License Plate Light 291

CONTINUED

Index

Bulb Replacement
- Rear Side Marker Lights 290
- Specifications 343
- Spotlights 293
- Turn Signal Lights 288

Bulbs, Halogen 287

C

Capacities Chart 342
Carbon Monoxide Hazard 60
Cargo Area Light 125
Cargo Hooks 196
Carrying Cargo 193
Cassette Player
- Care 168
- Operation 151, 164

CAUTION, Explanation of ii
CD Changer 149, 169
CD Player 146
Center Pocket 119
Center Table 115
Certification Label 340
Chains 284
Changing a Flat Tire 308
Changing Engine Coolant 253
Changing Oil 249
- How to 249
- When to 238

Charging System Indicator 66, 326
Checklist, Before Driving 199
Child Safety 24
Child Seats 29
- LATCH Anchorage System 47
- Lower Anchors 47
- Tether Anchorage Point 46

Childproof Door Locks 93
Cleaner Element, Air 265
Cleaning
- Aluminum Wheels 299
- Carpeting 301
- Exterior 298
- Fabric 302
- Interior 301
- Leather 302
- Seat Belts 302
- Vinyl 302
- Windows 303

Clock, Setting the 144, 162
Clutch Fluid 264
CO in the Exhaust 349
Cold Weather, Starting in 201
Consumer Information* 356
Controls, Instruments and 63
Coolant
- Adding 251
- Checking 189
- Proper Solution 251
- Replacing 253
- Temperature Gauge 74

Corrosion Protection 304
Crankcase Emissions Control System 349
Cruise Control Operation 179
Customer Relations Office 356

D

DANGER, Explanation of ii
Dashboard 64
Daytime Running Lights 77
Defects, Reporting Safety 358
Defog and Defrost 134
Defogger, Rear Window 81
Defrosting the Windows 134
Detachable Anchor 108
Dimensions 342
Dimming the Headlights 76

Dipstick
Automatic Transmission..... 260
Engine Oil..... 188
Directional Signals..... 77
Disc Brake Wear Indicators..... 211
Disposal of Used Oil..... 250
Doors
Locking and Unlocking..... 88
Power Door Locks..... 88
DOT Tire Quality Grading 344
Downshifting, 5-speed Manual Transmission..... 202
Drive Belt..... 277
Driving 197
Economy 190
In Bad Weather..... 215
In Foreign Countries..... 347
Driving Guidelines..... 198
Dust and Pollen Filter 275

E

Economy, Fuel 190
Emergencies on the Road..... 307
Battery, Jump Starting 320
Brake System Indicator 329
Changing a Flat Tire 308
Charging System Indicator 326
Checking the Fuses..... 332
Low Oil Pressure Indicator 325
Malfunction Indicator Lamp 327
Manually Closing Moonroof 330
Overheated Engine 323
Emergency Brake..... 82
Emergency Flashers 81
Emergency Towing 337
Emissions Controls..... 349
Emissions Testing, State 352
Engine
Coolant Temperature Gauge 74
Drive Belt..... 277
Engine Speed Limiter 203, 208
Malfunction Indicator Lamp 66, 327
Oil Pressure Indicator..... 66, 325
Oil, What Kind to Use..... 247
Overheating..... 323
Specifications 342
Starting..... 200
Ethanol in Gasoline 347
Evaporative Emissions Controls.. 349
Exhaust Fumes 60
Expectant Mothers, Use of Seat Belts by 21
Exterior, Cleaning the..... 298

F

Fabric, Cleaning..... 302
Fan, Interior..... 128
Features, Comfort and Convenience 127
Filling the Fuel Tank..... 185
Filters
Air Cleaner 265
Dust and Pollen..... 275
Oil 249
5-speed Manual Transmission
Checking Fluid Level 261
Shifting the 202
Flashers, Hazard Warning..... 81
Flat Tire, Changing a 308

CONTINUED

Index

Fluids
- Automatic Transmission..... 260
- Brake..... 263
- Clutch..... 264
- Manual Transmission 261
- Power Steering..... 264
- Rear Differential..... 262
- Windshield Washer..... 258

FM Stereo Radio
- Reception..... 161

Folding Rear Seat 104
Foreign Countries, Driving in 348
Four-way Flashers 81
Front Airbags 10, 54
Fuel..... 184
- Fill Door and Cap..... 185
- Gauge 74
- Octane Requirement 184
- Oxygenated 347
- Reserve Indicator..... 69
- Tank, Filling the..... 185

Fuses, Checking the..... 331

G

Gas Mileage, Improving..... 190
Gasohol 347
Gasoline 184
- Fuel Reserve Indicator..... 69
- Gauge 74
- Octane Requirement 184
- Tank, Filling the..... 185

Gas Station Procedures..... 185
Gauges
- Engine Coolant Temperature 74
- Fuel..... 74
- Speedometer 72
- Tachometer 72

Gearshift Lever Positions
- Automatic Transmission..... 204
- 5-speed Manual
  - Transmission..... 203

Glass Cleaning 303
Glove Box 96

H

Halogen Headlight Bulbs..... 287
Hatch Glass 94
Hazard Warning Flashers..... 81
Headlights
- Aiming..... 287
- Daytime Running Lights..... 77
- High Beam Indicator..... 69
- Reminder Beeper..... 76
- Replacing Halogen Bulbs 287
- Turning on..... 76

Head Restraints 99
Heating and Cooling..... 128
High Altitude, Starting at..... 201
High-Low Beam Switch 76
High-mount Brake Light..... 292
Hood Latch 266
Hood, Opening the 186
Horn..... 3, 75
Hydraulic Clutch..... 264
Hydroplaning..... 216

I

Identification Number, Vehicle.... 340
Ignition
- Keys..... 84
- Switch..... 86
- Timing Control System..... 350

Immobilizer System..... 85
Important Safety Precautions 6
Indicators, Instrument Panel..... 65

Infant Restraint 34
Infant Seats..... 34
LATCH Anchorage System 47
Lower Anchors 47
Tether Anchorage Points 46
Inflation, Proper Tire 278
High Speed Driving 279
Normal Driving 279
Inside Mirror 114
Inspection, Tire 280
Instrument Panel 65
Instrument Panel Brightness 77
Interior Cleaning..... 301
Interior Lights 124
Introduction i

J

Jacking up the Vehicle 312
Jack, Tire 309
Jump Starting 320

K

Keys..... 84

L

Label, Certification 340
Lane Change, Signaling 77
Lap/Shoulder Belts 17, 50
LATCH Anchorage System..... 47
Lights
Bulb Replacement 287
Indicator..... 65
Parking..... 76
Turn Signal 77
Load Limit 194
LOCK (Ignition Key Position) 87
Locks
Anti-theft Steering Column 87
Fuel Fill Door 185
Glove Box 96
Power Door 88
Tailgate 93
Low Coolant Level..... 189
Low Fuel Indicator 69
Low Oil Pressure Indicator 66, 325
Lower Anchors..... 47
Lubricant Specifications Chart 342
Luggage 193

M

Maintenance..... 233
Owner Maintenance Checks.... 245
Record..... 243-244
Required Indicator..... 70
Safety..... 234
Schedule 238-242
Malfunction Indicator Lamp .. 66, 327
Manual Transmission..... 202
Manual Transmission Fluid 261
Meters, Gauges..... 65, 72
Methanol in Gasoline 347
Mirrors, Adjusting 114
Moonroof 113
Closing Manually 330
Operation 113

CONTINUED

Index

N

Neutral Gear Position..... 206
New Vehicle Break-in 184
Normal Shift Speeds..... 203
NOTICE, Explanation of..... i
Numbers, Identification..... 340

O

Octane Requirement, Gasoline.... 184
Odometer..... 73
Odometer, Trip 73
Off-Highway Guidelines 226
Oil
  Change, How to 249
  Change, When to 238
  Checking Engine 188
  Pressure Indicator 66, 325
  Selecting Proper Viscosity
    Chart 248
ON (Ignition Key Position) 87
Onboard Refueling Vapor
  Recovery 349
Operation in Foreign Countries... 348
Outside Mirrors 114
Outside Temperature Indicator..... 73
Over Drive 207
Overheating, Engine 323
Owner Maintenance Checks..... 245
Oxygenated Fuels..... 347

P

Paint Touch-up..... 300
Panel Brightness Control 77
Park Gear Position..... 205
Parking..... 210
Parking Brake 82
Parking Brake and Brake
  System Indicator..... 66, 329
Parking Lights..... 76
Parking Over Things that Burn... 210
PGM-FI System..... 350
Polishing and Waxing 299
Pre-Drive Safety Checklist 12
Pregnancy, Using Seat Belts 21
Protecting Adults..... 13
  Additional Safety Precautions.... 22
  Advice for Pregnant Women..... 21
Protecting Children 24
  Protecting Infants..... 34
  Protecting Larger Children 42
  Protecting Small Children 38
  Using Child Seats with
    Tethers..... 46
  Using LATCH 47

R

Radiator Overheating..... 323
Radio/Cassette/CD Sound
  System..... 137
Readiness Codes..... 328
Rear Differential Fluid 262
Rear Lights, Bulb Replacement... 290
Rear Seat, Folding 104
Rear View Mirror..... 114
Rear Window Defogger 81
Rear Window Wiper and Washer .. 80
Reclining the Seat Backs 97
Recommended Shift Speeds 203
Reminder Lights 65
Remote Transmitter..... 89

Replacement Information
Air Cleaner Element 265
Dust and Pollen Filter 275
Engine Coolant 253
Engine Oil and Filter 249
Fuses 331
Light Bulbs 287
Schedule 238
Spark Plugs 267
Tires 282
Wiper Blades 271
Replacing Seat Belts After a Crash 53
Reserve Tank, Engine Coolant 189, 251
Restraint, Child 24
Reverse Gear Position 206
Reverse Lockout 209
Rotation, Tire 281

S

Safety Belts 8, 50
Safety Defects, Reporting* 358
Safety Checklist, Pre-Drive 12
Safety Features 7
Airbags 10
Door Locks 11
Head Restraints 11
Seat Belts 8
Seats and Seat-Backs 11
Safety Labels, Location of 61
Safety Messages ii
Seat Belts 8, 50
Additional Information 50
Advice for Pregnant Women 21
Automatic Seat Belt Tensioners 52
Cleaning 302
Detachable Anchor 108
Lap/Shoulder Belt 17, 50
Maintenance 53
Reminder Light and Beeper 50, 67
Replacement 53
System Components 50
Use During Pregnancy 21
Wearing a Lap/Shoulder Belt 17
Seat Heaters 109
Seats, Adjusting the 97
Serial Number 340
Service Intervals 238
Service Manual* 359
Service Station Procedures 185
Setting the Clock 144, 162
Shift Lever Position Indicator 204
Shift Lock Release 209
Side Airbags 10, 56
Cutoff Indicator 58, 67
Side Marker Lights, Bulb Replacement 288
Signaling Turns 77
Snow Tires 283
Solvent-type Cleaners 298
Sound System 137
Spare Tire 308
Spark Plugs, Replacing 267
Specifications Charts 342
Speed Control 179
Speedometer 72
Spotlights 124

CONTINUED

Index

SRS, Additional Information..... 54
Additional Safety Precautions.... 59
Airbag Service..... 59
How the Side Airbag Cutoff Indicator Light Works 58
How the SRS Indicator Works... 57
How Your Front Airbags Work..... 54
How Your Side Airbags Work.... 56
SRS Components 54
SRS Indicator..... 57, 67
START (Ignition Key Position) 87
State Emissions Testing 350
Starting the Engine..... 200
In Cold Weather at High Altitude 201
With a Dead Battery 320
Steam Coming from Engine..... 323
Steering Wheel
Adjustment 83
Anti-theft Column Lock 87
Stereo Sound System 137
Storage Box 119
Storing Your Vehicle..... 295
Sunglasses Holder 121
Supplemental Restraint System..... 10, 54
Servicing 59
SRS Indicator..... 57, 67
System Components..... 54
Synthetic Oil..... 248

T

Tachometer 72
Tailgate
Hatch Glass 94
Open Indicator 70
Opening the..... 93
Taillights, Changing Bulbs..... 290
Taking Care of the Unexpected .. 307
Tape Player 151, 164
Technical Descriptions
DOT Tire Quality Grading 344
Emissions Control Systems..... 349
Oxygenated Fuels..... 347
Three Way Catalytic Converter..... 351
Temperature Gauge 74
Tether Anchorage Points 46
Theft Protection..... 178
Three Way Catalytic Converter... 351
Time, Setting the 144, 162
Tire Chains 284
Tire, How to Change a Flat 308
Tire Information 346
Tires 278
Air Pressure 279
Checking Wear 280
DOT Tire Quality Grading 344
Inflation..... 278
Inspection 280
Maintenance..... 280
Replacing 282
Rotating..... 281
Snow 283
Specifications 343
Tire Chains..... 284
Tools, Tire Changing 308
Towing
A Trailer..... 217
Behind a Motorhome 224
Emergency 337

Transmission
Checking Fluid Level, Automatic 260
Checking Fluid Level, Manual 261
Fluid Selection 260, 261
Identification Number..... 341
Shifting the Automatic..... 204
Shifting the Manual..... 202
Treadwear 344
Trip Meter 73
Turn Signals 77

U

Underside, Cleaning..... 304
Unexpected, Taking Care of the 307
Uniform Tire Quality Grading 344
Unleaded Gasoline..... 184
Upholstery Cleaning..... 301
Used Oil, How to Dispose of 250

V

Vehicle Capacity Load 194
Vehicle Dimensions..... 342
Vehicle Identification Number..... 340
Vehicle Storage..... 295
Ventilation 131
VIN 340
Vinyl Cleaning..... 302
Viscosity, Oil..... 248

W

WARNING, Explanation of ii
Warning Labels, Location of 61
Warranty Coverages* 357
Washers, Windshield
Checking the Fluid Level 258
Operation 79
Washing 298
Waxing and Polishing 299
Wheels
Adjusting the Steering 83
Alignment and Balance..... 280
Wrench 311
Windows
Cleaning 303
Operating the Power 110
Rear, Defogger 81
Windshield
Cleaning 78
Defroster 134
Washers 258
Wipers, Windshield
Changing Blades..... 271
Operation 78
Worn Tires 280
Wrecker, Emergency Towing..... 337

* : U.S. and Canada only

Service Information Summary

Gasoline:
Unleaded gasoline, pump octane number of 86 or higher.

Fuel Tank Capacity:
15.3 US gal (58 ℓ)

Recommended Engine Oil:
API Premium grade 5W-20 detergent oil (see page 247).

Oil change capacity (including filter):
4.4 US qt (4.2 ℓ)

Automatic Transmission Fluid:
Honda ATF-Z1 (Automatic Transmission Fluid) preferred, or a DEXRON® III ATF as a temporary replacement (see page 260).

5-speed Manual Transmission Fluid:
Honda Manual Transmission Fluid preferred, or an SAE 10W-30 or 10W-40 motor oil as a temporary replacement (see page 261).

Capacity (including differential):
2.0 US qt (1.9 ℓ)

Rear Differential Fluid:
Honda Dual Pump Fluid. Do not use ATF (see page 262).

Capacity:
1.1 US qt (1.0 ℓ)

Power Steering Fluid:
Honda Power Steering Fluid preferred, or another brand of power steering fluid as a temporary replacement. Do not use ATF (see page 264).

Brake Fluid:
Honda Heavy Duty Brake Fluid DOT 3 preferred, or a DOT 3 or DOT 4 brake fluid as a temporary replacement (see page 263).

Tire Pressure (measured cold):
Front/Rear:
26 psi (180 kPa , 1.8 kgf/cm^2)